© Siemens 2024

SIEMENS

Catalog
D 21.3

Edition
April
2024

MOTION CONTROL DRIVES

SINAMICS S120

Chassis Format Converter Units
Chassis-2 Format Converter Units
Cabinet Modules, Cabinet Modules-2

SINAMICS S150

Converter Cabinet Units

siemens.com/d21-3

Промэлектроника, sales@prom-elec.com

© Siemens 2024

Related catalogs

SINAMICS G130 D 11
Converter Built-in Units
SINAMICS G150
Converter Cabinet Units

E86060-K5511-A101-A7-7600

Motion Control Drives D 31.1
SINAMICS Inverters for Single-Axis Drives
Built-In Units

PDF (E86060-K5531-A111-A4-7600)

Motion Control Drives D 31.2
SINAMICS Converters for Single-Axis Drives
Distributed Converters

PDF (E86060-K5531-A121-A3-7600)

SINAMICS Drives D 35
SINAMICS G120P and
SINAMICS G120P Cabinet
pump, fan, compressor converters

PDF (E86060-K5535-A101-A5-7600)

Motion Control Drives D 21.4
SINAMICS S120, SINAMICS S220 and
SIMOTICS

E86060-K5521-A141-A2-7600

Industrial Controls IC 10
SIRIUS

PDF (E86060-K1010-A101-B5-7600)

Industrial Communication IK PI
SIMATIC NET

E86060-K6710-A101-B8-7600

Low-Voltage Power Distribution and Electrical Installation Technology LV 10
SENTRON • SIVACON • ALPHA

PDF (E86060-K8280-A101-B7-7600)

SIMATIC ST 70
Products for
Totally Integrated Automation

PDF (E86060-K4670-A101-C0-7600)

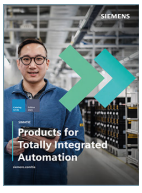

SiePortal
Information and Ordering Platform
on the Internet

sieportal.siemens.com

The Engineering Manuals

SINAMICS Low Voltage Engineering Manual

Engineering Manual for
- SINAMICS G130 Converter Built-In Units,
- SINAMICS G150 Converter Cabinet Units,
- SINAMICS S120 Chassis Format Converter Units,
- SINAMICS S120 Cabinet Modules,
- SINAMICS S150 Converter Cabinet Units

This manual offers users comprehensive support with the configuring of drives and associated system components.

The first three chapters are devoted primarily to the fundamental physical principles of variable-speed electric drives and include EMC Installation Guidelines as well as general system descriptions and planning information which relate to all products in the SINAMICS range.

The other chapters then discuss in detail questions relating to the dimensioning of drives with converters of specific types as well as the selection of suitable motors.

SINAMICS Low Voltage Engineering Manual (2)

Engineering Manual for
- SINAMICS S120 Chassis-2
- SINAMICS S120 Cabinet Modules-2

This Engineering Manual is an extension and supplement to the existing Engineering Manual.

Note:

The manuals are not available in hard copy form, but only as an electronic file in PDF format.

© Siemens 2024

SIEMENS

Catalog
D 21.3

Edition
April
2024

Combining the real and digital worlds ...
Transformation

MOTION CONTROL DRIVES

SINAMICS S120

Chassis and Chassis-2 Format Converter Units
Cabinet Modules, Cabinet Modules-2

SINAMICS S150

Converter Cabinet Units

siemens.com/d21-3

Dear Customer,

We are pleased to present you with the new Catalog D 21.3 · April 2024. The catalog provides a comprehensive overview of the SINAMICS S120 Chassis and Chassis-2 Format Converter Units, the Cabinet Modules and Cabinet Modules-2 as well as the SINAMICS S150 Converter Cabinet Units.
In addition to updates and technical modifications, the new edition of the catalog has also been supplemented with the OEM kit for SINAMICS S120 Chassis-2 for control cabinet installation. The water-cooled converter units in chassis format were removed from the portfolio.

Up-to-date information about SINAMICS S120 is available on the internet at: www.siemens.com/sinamics-s120

Up-to-date information about SINAMICS S150 is available on the internet at: www.siemens.com/sinamics-s150

You can access SiePortal on the internet at: https://sieportal.siemens.com

Your personal contact will be happy to receive your suggestions and recommendations for improvement.
You can find your representative in our Personal Contact database at: www.siemens.com/automation-contact

We hope that you will often enjoy using Catalog D 21.3 · April 2024 as a selection and ordering reference document and wish you every success with our products and solutions.

With kind regards

Frank Golüke
Vice President
General Motion Control
Siemens AG, Digital Industries, Motion Control

© Siemens 2024

© Siemens 2024

SINAMICS S120 Chassis Format Converter Units
SINAMICS S120 Cabinet Modules
SINAMICS S150 Converter Cabinet Units

Motion Control Drives

Catalog D 21.3 · April 2024

Supersedes:
Catalog D 21.3 · 2022

Refer to SiePortal for current updates of this catalog:
https://sieportal.siemens.com

Please contact your local Siemens branch.

© Siemens 2024

System Overview 1

Highlights 2

SINAMICS S120 Chassis Format Converter Units
75 kW to 5700 kW 3

SINAMICS S120 Chassis-2 Format Converter Units
315 kW to 3590 kW 4

System Components
for SINAMICS S120 converter built-in units 5

SINAMICS S120 Cabinet Modules
4.8 kW to 5700 kW 6

SINAMICS S120 Cabinet Modules-2
315 kW to 3590 kW 7

SINAMICS S150 Converter Cabinet Units
75 kW to 1200 kW 8

Tools and Engineering 9

Services and Documentation 10

Appendix 11

The products and systems described in this catalog are manufactured/distributed under application of a certified quality management system in accordance with EN ISO 9001. The certificate is recognized by all IQNet countries.

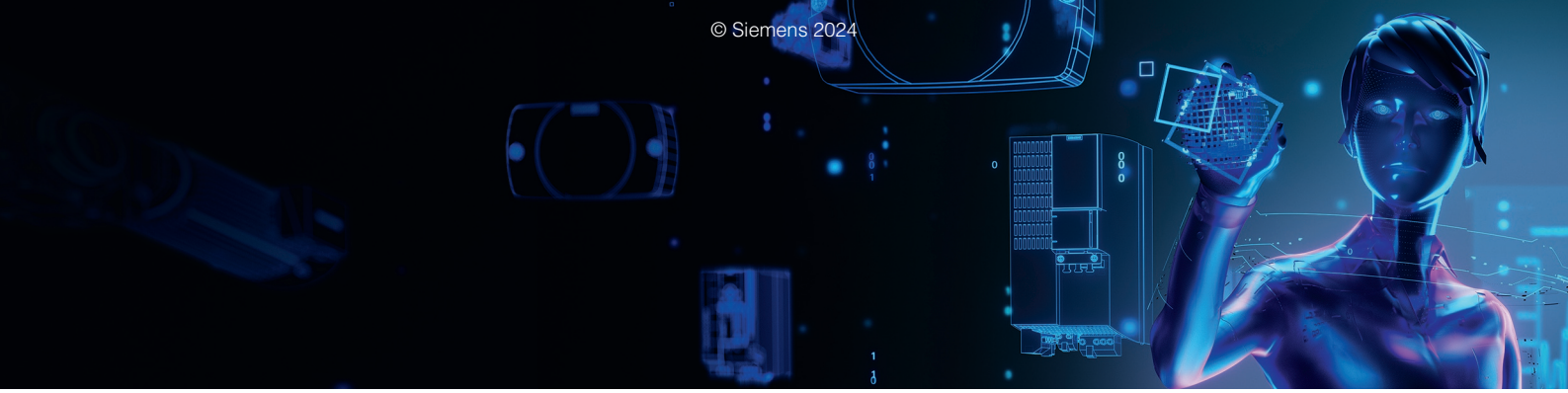

Digitalization in drive technology

From the digital world to the real world

siemens.com/digital-drives

Increase your transparency and productivity by digitalizing your drive technology

Many drives are used in the manufacturing and process industries. They produce lots of data anyway – why not use them to increase the availability and productivity of machines and plants?

Drive technology offers the ideal entry point into the world of digitalization – for plant and machine builders as well as for users.

The digitalization portfolio for the drive train spans over the complete life cycle – from the design phase to realization and optimization – in the digital and the real world.

Our portfolio contains drive simulation solutions and efficient engineering tools, comprehensive connectivity that allows drives to be easily linked to the relevant platforms as well as smart analytics (e.g. cloud and edge apps) and drive system services.

These solutions enable you to gain a better understanding of processes, states and utilization. The health status of the drive train can be monitored and analyzing drive data enables an early detection of anomalies and reduces downtimes.

This way, availability and productivity of machines and plants can be increased and the actual maintenance demand can be identified. Furthermore, data-based business models and service offerings are facilitated.

Our digitalization portfolio covers all phases of the life cycle: from the design phase to realization and optimization. It covers the digital and the real drive train.

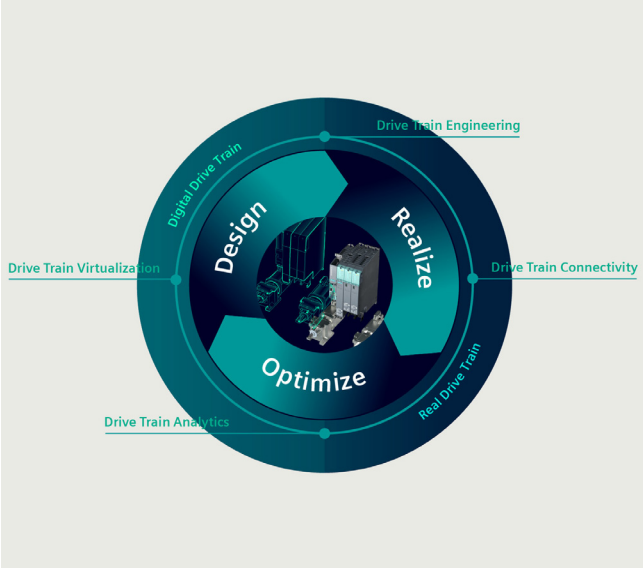

Design: By creating a digital twin of the drives, machine builders can shorten their time-to-market since they can design, simulate and optimize their machine before ordering any material or products. Together with other tools from the engineering box, simulation can also speed up the engineering phase of drives and entire machines, for example by virtual commissioning of the PLC.

Realize: Once the machine is in operation, the drives can be connected to other platforms, for example to the cloud and Industrial Edge. This creates transparency in terms of what is going on inside the drive train, e.g. with regard to the actual current, torque and speed.

Optimize: To understand the collected data, our drive train analytics portfolio provides algorithms and analysis tools to unlock the potential of the data and turn the gained transparency into insights and valuable knowledge. These insights can then again be used in the design phase of the next life cycle, thus closing the loop.

© Siemens 2024

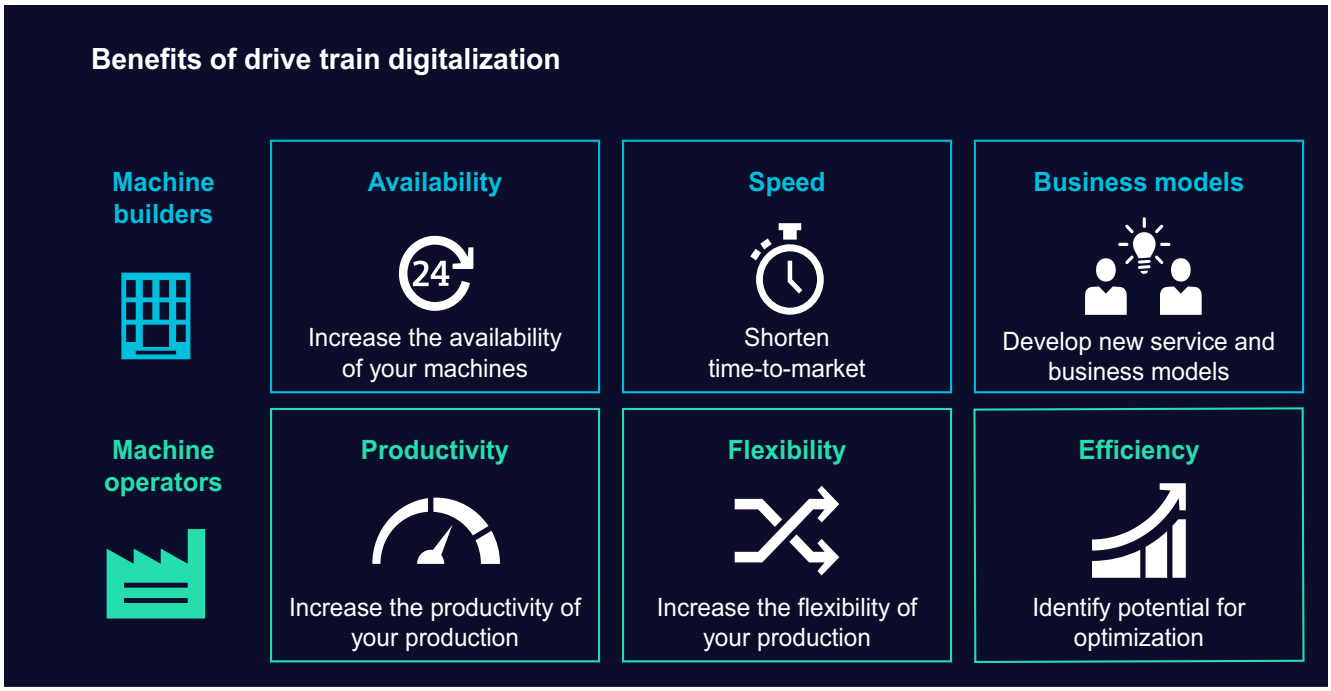

Benefits for machine and plant builders

- Increased availability of machines and plants – thanks to digital options for checking and implementing design improvements and comprehensive monitoring of drive systems
- Shorter time-to-market and faster development times – thanks to practical software tools and a continuous database for concurrent development processes as well as virtual simulations, tests, and commissioning of machines and plants
- New options for future service and business models – ranging from customized application solutions and digital services to contractually guaranteed availabilities of machines and plants

Benefits for machine and plant operators

- Increased availability and productivity of production, fewer unscheduled downtimes – through the early detection of deviations and emerging risks thanks to digital drive monitoring
- More flexible production down to batch size 1 – through more effective use of knowledge from existing production lines thanks to transparent utilization, states, locations, and capacities down to the drive level
- Identification of potential for optimization to make production faster, better, and more efficient thanks to data-based transparency – for example, for faster modifications, simpler quality control, and the early prediction of maintenance demand as well as demand-oriented maintenance

siemens.com/digital-drives

TIA Selection Tool – quick, easy, smart configuration

For you to get the most out of our portfolio quickly and easily.

Do you always need the optimum configuration for planning your project?
For your application we offer the TIA Selection Tool to support all project planners, beginners and experts alike.
No detailed portfolio knowledge is necessary.
TIA Selection Tool is available for download as a free desktop version or a cloud variant.

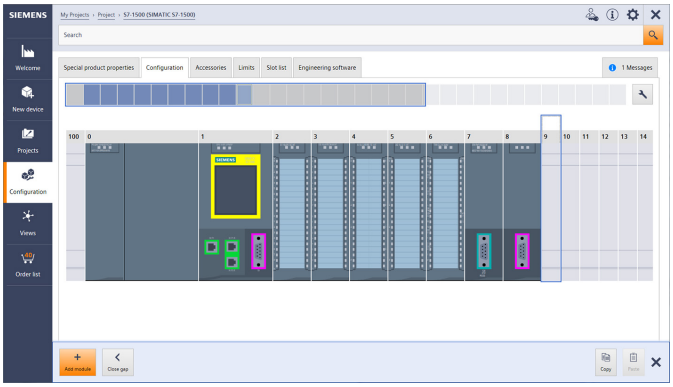

Your Advantages

Quick

- Configure a complete project with just a few entries – without a manual, without special knowledge
- Import and export of hardware configuration to TIA Portal or other systems
- Ideal visualization of the projects to be configured

Easy

- Tool download either as desktop version or web-based cloud version
- Technically always up-to-date about product portfolio and innovative approaches
- Highly flexible, secure, cross-team work in the cloud
- Direct ordering in SiePortal

Smart

- Smart selection wizard for error-free configuration and ordering
- Configuration options can be tested and simulated in advance
- Library for archiving sample configurations

The TIA Selection Tool is a completely paperless solution.
Download it now:
www.siemens.com/tst

For more information, scan the QR code

© Siemens 2024

Sustainability @Siemens

Transforming the everyday to create a better tomorrow.

For more information, see www.siemens.com/sustainabililty-figures

As a company, Siemens considers environmental, social and governance (ESG) criteria from all angles with its DEGREE framework (decarbonization, ethics, governance, resource efficiency, equity and employability). We are not only committed to reducing the carbon footprint in our own operations to net zero by 2030, but also helping our customers achieve their decarbonization and sustainability goals.

Mission & strategy

As a focused technology company, Siemens is committed to addressing the world's most profound challenges by leveraging the synergies between digitalization and sustainability.

Technology with aim and purpose

We develop technologies that connect the real and digital worlds and enable our customers to positively transform the industries that form the backbone of our economy: industry, infrastructure, transportation and healthcare.

Our contribution

Siemens makes an impact every day by providing innovative solutions in response to challenges relating to environmental protection, decarbonization, health and safety. Innovative solutions that have a clear goal: to make the world more sustainable, more integrative and a better place to live.

Sustainability facts

For almost 175 years, Siemens has been driven by the desire to improve the lives of people around the world with our technologies.

© Siemens 2024

© Siemens 2024

System Overview

1/2 The SINAMICS converter family
1/2 Integration in automation
1/2 Applications
1/3 SINAMICS as part of the Siemens modular automation system
1/3 Energy efficiency
1/4 Variants
1/4 Platform concept
1/4 Quality management according to EN ISO 9001
1/4 Industry Online Support app
1/5 DRIVE-CLiQ – the digital interface between all components
1/5 Swift and automatic: The electronic rating plate
1/5 IDS – integration at its very best

1/6 Drive selection
1/6 SINAMICS selection guide – typical applications

1/7 SIMOTICS motors

1/8 SINAMICS S120
The flexible, modular drive system for demanding drive tasks

1/12 SINAMICS S150
The drive solution for demanding single-motor drives

© Siemens 2024

Overview

Integration in automation

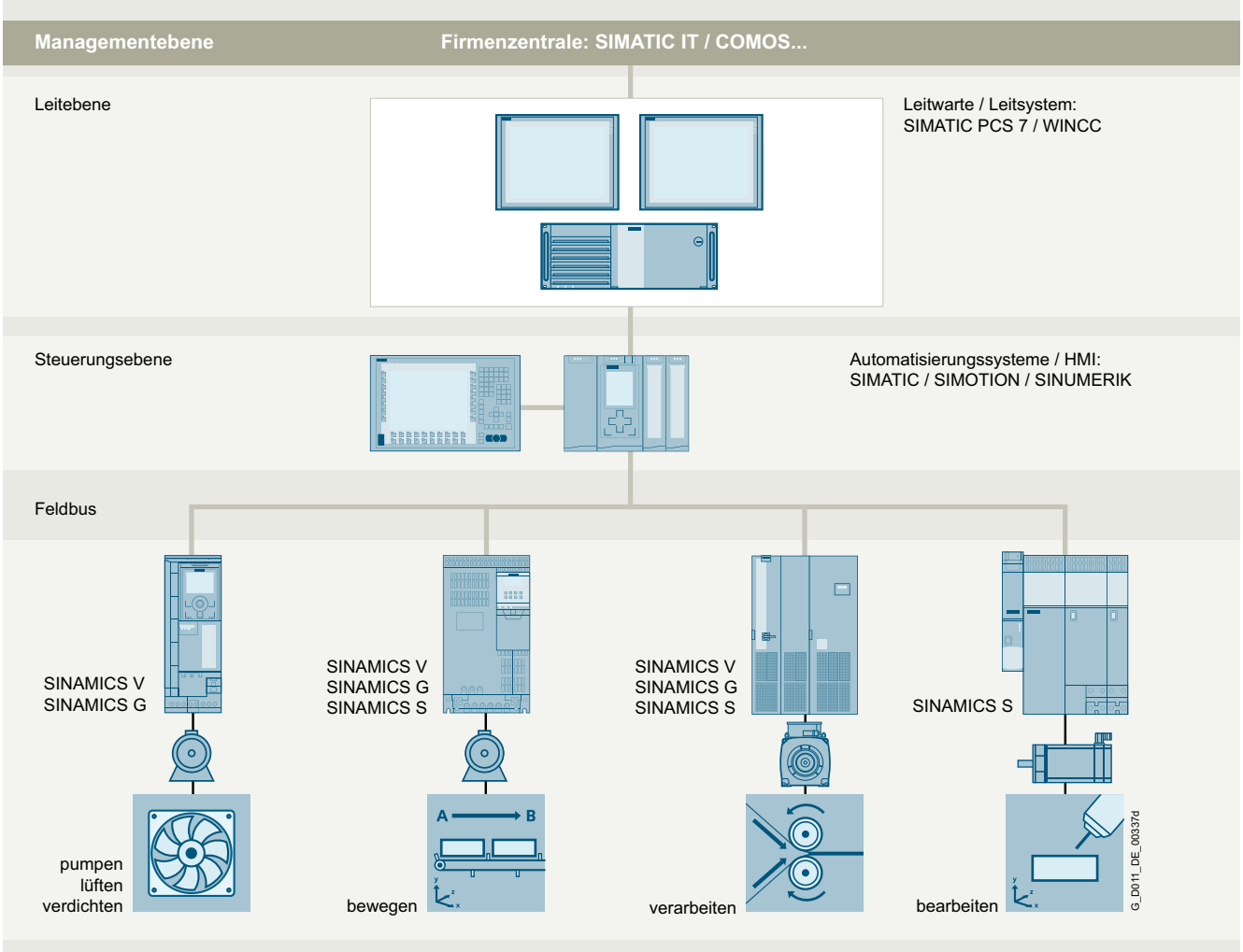

Totally Integrated Automation and communication

SINAMICS is an integral component of Siemens Totally Integrated Automation. The integrated and seamless SINAMICS system covering configuration, data management, and communication at the automation level ensures solutions with minimal associated effort in conjunction with the SIMATIC, SIMOTION, and SINUMERIK control systems.

Depending on the application, the appropriate converter can be selected and incorporated in the automation concept. With this in mind, the converters are clearly subdivided into their different applications. A wide range of communication options (depending on the drive type) are available for establishing a communication link to the automation system:

- PROFINET
- PROFIBUS
- EtherNet/IP
- Modbus TCP
- Modbus RTU
- AS-Interface
- BACnet MS/TP

Applications

SINAMICS is the comprehensive converter family from Siemens designed for machine and plant engineering applications. SINAMICS offers solutions for all drive tasks:

- Simple pump and fan applications in the process industry
- Demanding single drives in centrifuges, presses, extruders, elevators, as well as conveyor and transport systems
- Drive line-ups in textile, plastic film, and paper machines as well as in rolling mill plants
- Highly dynamic servo drives for machine tools, as well as packaging and printing machines

© Siemens 2024

Overview

SINAMICS as part of the Siemens modular automation system

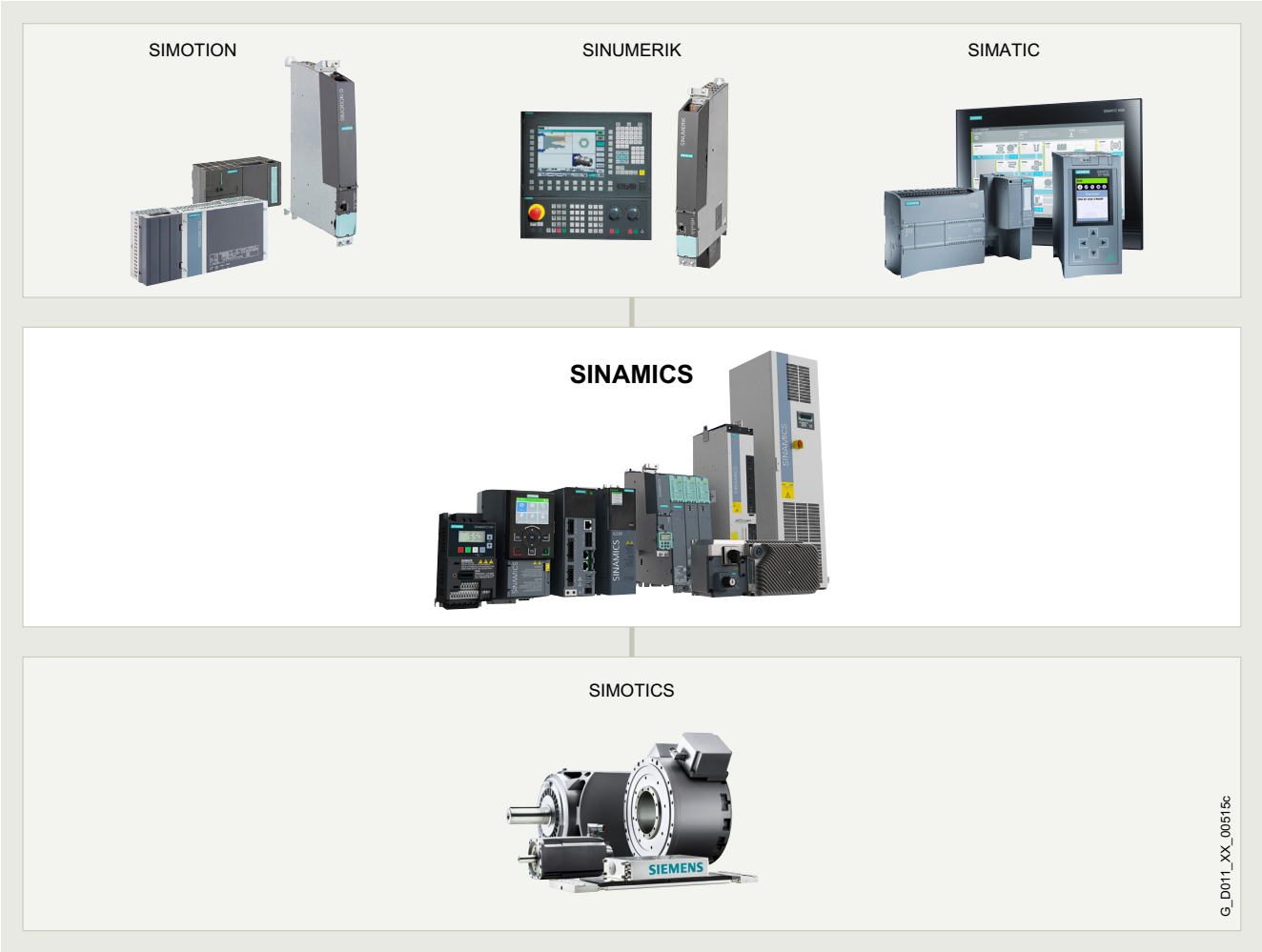

Innovative, energy-efficient and reliable drive systems and applications as well as services for the entire drive train

The solutions for drive technology place great emphasis on the highest productivity, energy efficiency and reliability for all torque ranges, performance and voltage classes.

Siemens offers not only the right innovative variable frequency drive for every drive application, but also a wide range of energy-efficient motors for combination with SINAMICS.

Furthermore, Siemens supports its customers with global pre-sales and after-sales services, with over 295 service points in 130 countries – and with special services e.g. application consulting or motion control solutions.

Energy efficiency

Energy management process

Efficient energy management consultancy identifies the energy flows, determines the potential for making savings and implements them with focused activities.

Almost two thirds of the industrial power requirement is from electric motors. This makes it all the more important to use drive technology permitting energy consumption to be reduced effectively even in the configuration phase, and consequently to optimize plant availability and process stability. With SINAMICS, Siemens offers powerful energy-efficient solutions which, depending on the application, enable a significant reduction in electricity costs.

Up to 70 % potential for savings using variable speed operation

SINAMICS enables great potential for savings to be realized by controlling the motor speed. In particular, huge potential savings can be recovered from pumps, fans and compressors which are operated with mechanical throttles and valves. Here, changing to variable-speed drives brings enormous economic advantages. In contrast to mechanical control systems, the power consumption at partial load operation is always immediately adjusted to the demand at that time. Thus, energy is no longer wasted, permitting savings of up to 60 % – in exceptional cases even up to 70 %. Variable-speed drives also offer clear advantages over mechanical control systems when it comes to maintenance and repair. Current spikes when powering up the motor and strong torque surges become things of the past – and the same goes for pressure waves in pipelines, cavitation or vibrations which cause sustainable damage to the plant. Smooth starting and ramp-down relieve the load on the mechanical system, ensuring a significantly longer service life of the entire drive train.

© Siemens 2024

Overview

Regenerative feedback of braking energy

In conventional drive systems, the energy produced during braking is converted to heat using braking resistors. Energy produced during braking is efficiently recovered to the supply system by versions of SINAMICS G and SINAMICS S converters with regenerative feedback capability and these devices do not therefore need a braking resistor. This permits up to 60 % of the energy requirement to be saved, e.g. in lifting applications. Energy which can be reused at other locations on a machine. Furthermore, this reduced power loss simplifies the cooling of the system, enabling a more compact design.

Energy transparency in all configuration phases

Early on, in the configuration phase, the SIZER for Siemens Drives (integrated in the TIA Selection Tool) engineering tool provides information on the specific energy requirement. The energy consumption across the entire drive train is visualized and compared with different plant concepts.

SINAMICS in combination with energy-saving motors

Engineering integration stretches beyond the SINAMICS converter family to higher-level automation systems, and to a broad spectrum of energy-efficient motors with a wide range of performance classes, which, compared to previous motors, are able to demonstrate up to 10 % greater efficiency.

Variants

Depending on the application, the SINAMICS range offers the ideal variant for any drive task.

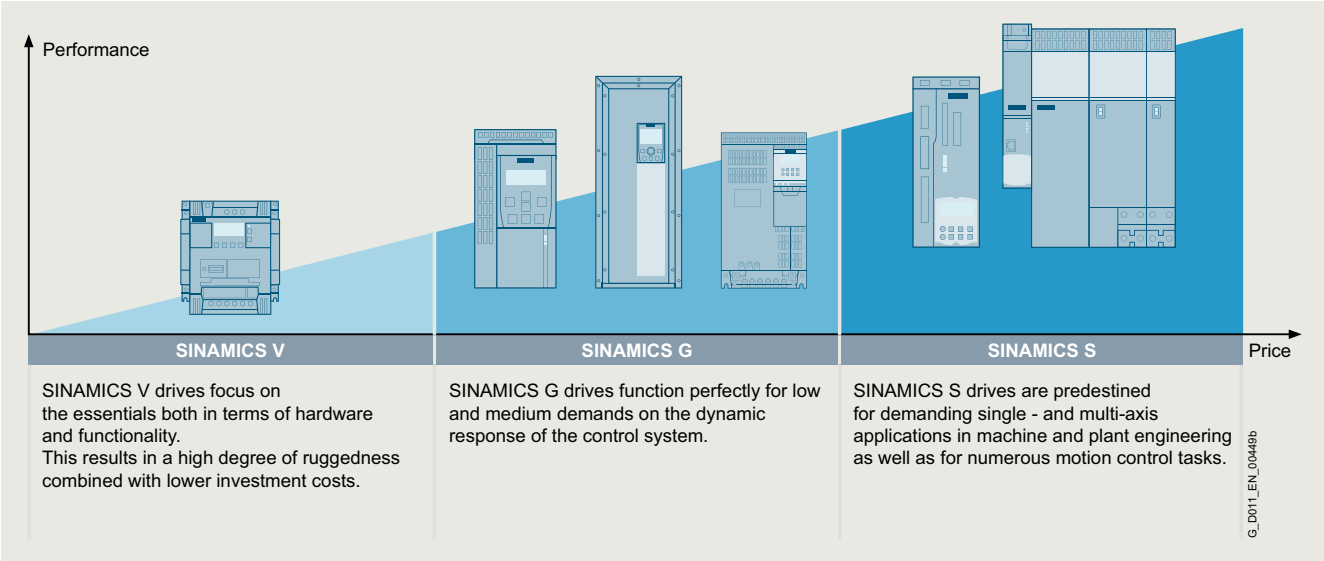

Platform concept

All SINAMICS variants are based on a platform concept. Joint hardware and software components, as well as standardized tools for dimensioning, configuration, and commissioning tasks ensure high-level integration across all components. SINAMICS handles a wide variety of drive tasks with no system gaps. The different SINAMICS variants can be easily combined with each other.

Quality management according to EN ISO 9001

SINAMICS conforms to the most exacting quality requirements. Comprehensive quality assurance measures in all development and production processes ensure a consistently high level of quality.

Of course, our quality management system is certified by an independent authority in accordance with EN ISO 9001.

Industry Online Support app

With the Industry Online Support app, you can access more than 300000 documents for Siemens Industry products – any time and from anywhere.

Main functions at a glance:

- Scanning of product codes and EAN codes to directly display all of the technical and graphical data (e.g. CAx data) of the product
- Sending of product information or entries via e-mail to further process the information at the workstation
- Conveniently send inquiries to Technical Support. Detailed information can be conveniently completed using the scan or photo function
- Save the favorites on the device using the offline cache function. These articles, products and conferences can then be called even without network access.
- Transfer of PDF documents to an external library
- The contents and interfaces are available in six languages (German, English, French, Italian, Spanish and Chinese) - including a temporary switchover to English.

You can find additional information on the internet at:
www.siemens.com/sinamics-assistant

© Siemens 2024

Overview

DRIVE-CLiQ – the digital interface between all components

All SINAMICS S120 components, including the motors and encoders, are interconnected by a shared serial interface called DRIVE-CLiQ. The standardized cables and connectors reduce the variety of different parts and cut storage costs. Converter boards (Sensor Modules) for converting standard encoder signals to DRIVE-CLiQ are available for third-party motors or retrofit applications.

Swift and automatic: The electronic rating plate

An important digital linkage element of the SINAMICS S120 drive system are the electronic rating plates integrated in every component. They allow all drive components to be detected automatically via a DRIVE-CLiQ link. As a result, data do not need to be entered manually during commissioning or component replacement – helping to ensure that drives are commissioned successfully! The electronic rating plates of the motors contain, for example, the parameters of the electrical equivalent circuit diagram and the characteristic data of the built-in motor encoder in addition to information such as order and identification numbers.

IDS – integration at its very best

The Siemens Integrated Drive Systems (IDS) solution offers perfectly matched drive components with which you can meet your requirements. The drive components reveal their true strengths as an Integrated Drive System over the full range from engineering and commissioning through to operation: Integrated system configuration is performed using the Siemens Product Configurator. Just select a motor and a converter and design them with the SIZER engineering tool for Siemens Drives (integrated in the TIA Portal). The STARTER and SINAMICS Startdrive commissioning tools integrate the motor data and, at the same time, simplify efficient commissioning. Integrated Drive Systems are incorporated in the TIA Portal – this simplifies engineering, commissioning and diagnostics.

Low voltage											Direct voltage
Standard performance frequency converters		Distributed frequency converters	Industry-specific frequency converters		Servo converters			High performance frequency converters			DC converters
	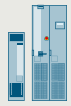										
SINAMICS V20 G120C G120	SINAMICS G130 G150	SINAMICS G115D G120D SIMATIC ET 200pro FC-2	SINAMICS G120X	SINAMICS G180	SINAMICS V90 S200	SINAMICS S110	SINAMICS S210 S210 (New)	SINAMICS G220	SINAMICS S120 S120M	SINAMICS S150	SINAMICS DCM DCP [1]
0.12 kW to 250 kW	75 kW to 2700 kW	0.37 kW to 7.5 kW	0.75 kW to 630 kW	2.2 kW to 6600 kW	0.05 kW to 7 kW	0.55 kW to 132 kW	0.05 kW to 7 kW	0.55 kW to 55 kW	0.55 kW to 5700 kW	75 kW to 1200 kW	6 kW to 30 MW
Pumps, fans, compressors, conveyor belts, mixers, mills, spinning machines, textile machines, refrigerated display counters, fitness equipment, ventilation systems, single-axis positioning applications in machine and plant engineering	Pumps, fans, compressors, conveyor belts, mixers, mills, extruders	Conveyor technology, single-axis positioning applications (G120D)	Pumps, fans, compressors, building management systems, process industry, HVAC, water/waste water industries	Pumps, fans, compressors, conveyor belts, extruders, mixers, mills, kneaders, centrifuges, separators	Handling machines, packaging machines, automatic assembly machines, metal forming machines, printing machines, winding and unwinding units	Single-axis positioning applications in machine and plant engineering	Packaging machines, handling equipment, feed and withdrawal devices, stacking units, automatic assembly machines, laboratory automation, wood, glass and ceramics industry, digital printing machines	Pumps, fans, compressors, conveyor belts, mixers, mills, spinning machines, textile machines, refrigerated display counters, fitness equipment, ventilation systems, single-axis positioning applications in machine and plant engineering	Production machines (packaging, textile and printing machines, paper machines, plastic processing machines), machine tools, plants, process lines and rolling mills, marine drives, test bays	Test bays, cross cutters, centrifuges	Rolling mill drives, wire-drawing machines, extruders and kneaders, cableways and lifts, test bay drives
Catalog D 31.1	Catalog D 11	Catalog D 31.2	Catalog D 31.5	Catalog D 18.1	Catalog D 33 D 37.1	Catalog D 31.1	Catalog D 32	Catalog D 36.1	Catalogs D 21.3, D 21.4 NC 62	Catalog D 21.3	Catalog D 23.1, SiePortal
Engineering tools (e.g. Siemens Product Configurator, TIA Selection Tool, DriveSim Designer/Engineer, STARTER and SINAMICS Startdrive)											

[1] DC/DC controllers, see SiePortal.

G_D011_EN_00450v

© Siemens 2024

Overview

SINAMICS selection guide – typical applications

Use	Requirements for torque accuracy/speed accuracy/position accuracy/coordination of axes/functionality					
	Continuous motion			Non-continuous motion		
	Basic	Medium	High	Basic	Medium	High
	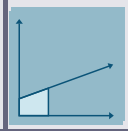	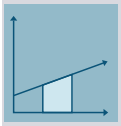	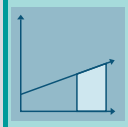	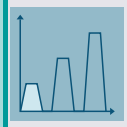	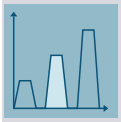	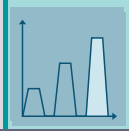
Pumping, ventilating, compressing	Centrifugal pumps Radial / axial fans Compressors	Centrifugal pumps Radial / axial fans Compressors	Eccentric screw pumps	Hydraulic pumps Metering pumps	Hydraulic pumps Metering pumps	Descaling pumps Hydraulic pumps
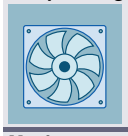	V20 G120C G120X	G120X G130/G150 G180 [1] DCM	G220 **S120**/S220	G120/G220	S110	**S120**/S220
Moving 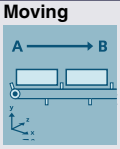	Conveyor belts Roller conveyors Chain conveyors	Conveyor belts Roller conveyors Chain conveyors Lifting/lowering devices Elevators Escalators/moving walkways Indoor cranes Marine drives Cable railways	Elevators Container cranes Mining hoists Excavators for open-cast mining Test bays	Acceleration conveyors Storage and retrieval machines	Acceleration conveyors Storage and retrieval machines Cross cutters Reel changers	Storage and retrieval machines Robotics Pick & place Rotary indexing tables Cross cutters Roll feeds Engagers/disengag-ers
	V20 G115D G120C ET 200pro FC-2 [2]	G120/G220 G120D G130/G150 G180 [1]	G220 **S120**/S220 **S150** DCM	V90 S200 G120/G220 G120D	S110 S210 DCM	**S120**/S220 S210 DCM
Processing 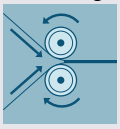	Mills Mixers Kneaders Crushers Agitators Centrifuges	Mills Mixers Kneaders Crushers Agitators Centrifuges Extruders Rotary furnaces	Extruders Winders/unwinders Lead/follower drives Calenders Main press drives Printing machines	Tubular bagging machines Single-axis motion control such as • Position profiles • Path profiles	Tubular bagging machines Single-axis motion control such as • Position profiles • Path profiles	Servo presses Rolling mill drives Multi-axis motion control such as • Multi-axis positioning • Cams • Interpolations
	V20 G120C	G120/G220 G130/G150 G180 [1]	G220 **S120**/S220 **S150** DCM	V90 S200 G120/G220	S110 S210	**S120**/S220 S210 DCM
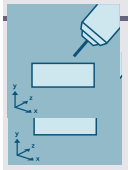	Main drives for • Turning • Milling • Drilling	Main drives for • Drilling • Sawing	Main drives for • Turning • Milling • Drilling • Gear cutting • Grinding	Axis drives for • Turning • Milling • Drilling	Axis drives for • Drilling • Sawing	Axis drives for • Turning • Milling • Drilling • Lasering • Gear cutting • Grinding • Nibbling and punching
	S110	S110 **S120**/S220	**S120**/S220	S110	S110 **S120**/S220	**S120**/S220

Using the SINAMICS selection guide

The varying range of demands placed on modern variable frequency converters requires a large number of different types. Selecting the optimum converter is becoming a significantly more complex process. The application matrix shown simplifies this selection process considerably, by suggesting the ideal SINAMICS converter for examples of typical applications and requirements.

- The application type is selected from the vertical column
  - Pumping, ventilating, compressing
  - Moving
  - Processing
  - Machining
- The quality of the motion type is selected from the horizontal row
  - Basic
  - Medium
  - High

More information

More information about SINAMICS is available on the internet at www.siemens.com/sinamics

Practical application examples and descriptions are available on the internet at www.siemens.com/sinamics-applications

[1] Industry-specific converters.

[2] Information on the SIMATIC ET 200pro FC-2 frequency converter is available in Catalog D 31.2 and at www.siemens.com/et200pro-fc

© Siemens 2024

Overview

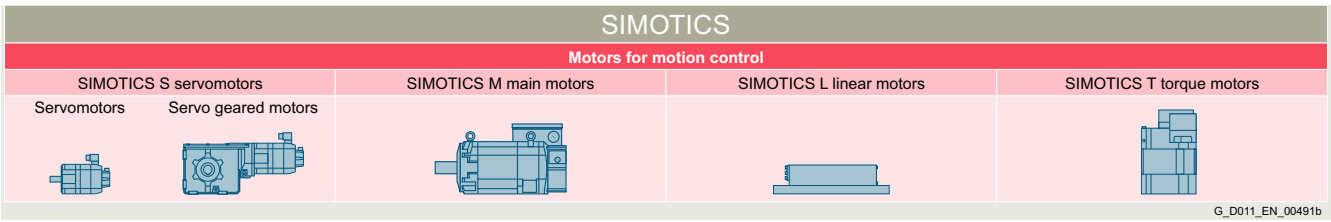

SIMOTICS stands for

- 150 years of experience in building electric motors
- The most comprehensive range of motors for motion control applications
- Optimum solutions in all industries, regions and power/performance classes
- Innovative motor technologies of the highest quality and reliability
- Highest dynamic performance, precision and efficiency together with the optimum degree of compactness
- Our motors can be integrated into the drive train as part of the overall system
- A global network of skill sets and worldwide service around the clock

A clearly structured portfolio

The entire SIMOTICS product portfolio is transparently organized according to application-specific criteria in order to help users select the optimum motor for their application.

Whatever it is that you want to move – we can supply the right motor for the task.
www.siemens.com/simotics

An outstanding performance for any job

A key characteristic of all SIMOTICS motors is their quality. They are robust, reliable, dynamic and precise to assure the requisite performance level for any process and deliver exactly the capabilities demanded by the application in hand. Thanks to their compact design, they can be integrated as space-saving units into installations. Furthermore, their impressive energy efficiency makes them effective as a means of reducing operating costs and protecting the environment.

A dense network of skill sets and servicing expertise around the world

SIMOTICS offers not only a wealth of sound experience gleaned from a development history which stretches back over around 150 years, but also the know-how of hundreds of engineers. This knowledge and our worldwide presence form the basis for a unique proximity to industries which feeds through in tangible terms to the specific motor configuration which is tailored to suit your application.

Our specialists are available to answer all your queries regarding any aspect of motor technology. At any time – wherever you are in the world. When you choose SIMOTICS, therefore, you reap the benefits of a global service network which is continuously accessible, thereby helping to optimize response times and minimize downtimes.

Perfection of the complete drive train

SIMOTICS is perfectly coordinated with other Siemens product families. In combination with the SINAMICS integrated converter family and the SIRIUS complete portfolio of industrial controls, SIMOTICS fits seamlessly as part of the complete drive train into automation solutions which are based on the SIMATIC, SIMOTION and SINUMERIK control systems.

© Siemens 2024

Overview

The flexible, modular drive system for demanding drive tasks

SINAMICS S120 is the modular drive system with vector and servo control that is ideal for sophisticated drive tasks in plant and machine construction.

Multi-axis drive solutions with higher-level motion control can be implemented with the modular SINAMICS S120 system just the same as solutions for single-axis drives.

Covering a power range from 0.12 kW to 5700 kW and various control modules with a graduated range of functions, the modular SINAMICS S120 system can be used to simply and quickly create a precisely tailored drive configuration – for almost any sophisticated drive application.

On the SINAMICS S120, the drive intelligence is combined with closed-loop control functions into Control Units.

These units are capable of controlling drives in the vector, servo and V/f modes. They also perform the speed and torque control functions plus other intelligent drive functions for all axes on the drive.

Using the available closed-loop control techniques, both synchronous as well as induction motors can be operated, and therefore the complete range of low-voltage motors from Siemens.

Integrated PROFINET or PROFIBUS DP interfaces ensure easy integration into complete automation solutions. SINAMICS S120 also supports many other fieldbus interfaces.

SINAMICS S120 Cabinet Modules are available as a cabinet system specifically for use in plant construction. These can be combined to form drive cabinet line-ups with a total power rating of up to 5700 kW. Standardized interfaces enable the modules to be linked quickly to create a ready-to-connect drive solution for multi-motor applications.

Benefits

SINAMICS S120 is characterized by the following properties:

- Can be universally used in high-performance single and multi-axis applications
- Can be freely combined to create customized solutions
- Wide range of power ratings
- Wide range of functions
- SINAMICS Safety Integrated functions
- Supports various cooling types (air/liquid-cooled)
- Supports various infeed concepts
- Can be simply integrated into higher-level automation and IT environments
- User-friendly engineering
- Ease of handling
- Simple installation
- Practical connection system
- Auto-configuration with electronic rating plates

Application

SINAMICS S120 vector control is recommended for drive solutions with continuous material webs, for example, wire-drawing machines, film and paper machines, as well as for hoisting gear, centrifuges and marine drives with harmonic, circular motion.

SINAMICS S120 with servo control and servo motors is employed for cyclic processes with both precise and highly dynamic closed-loop position control.

With SINAMICS S120, more performance is integrated into machines that are used in many industries, for instance in:

- Packaging machines
- Plastics processing machines
- Textile machines
- Presses and punches
- Printing and paper machines
- Machines used in the woodworking, glass and ceramics industries
- Hoisting gear
- Handling and assembly systems
- Machine tools
- Rolling mill drives
- Vehicle and gearbox test stands
- Test stand applications
- Marine applications

© Siemens 2024

Design

SINAMICS S120 built-in units are available as Power Modules, Line Modules and Motor Modules with the appropriate line-side and motor-side components.

Cooling types

There are various cooling options available depending on the type of construction:

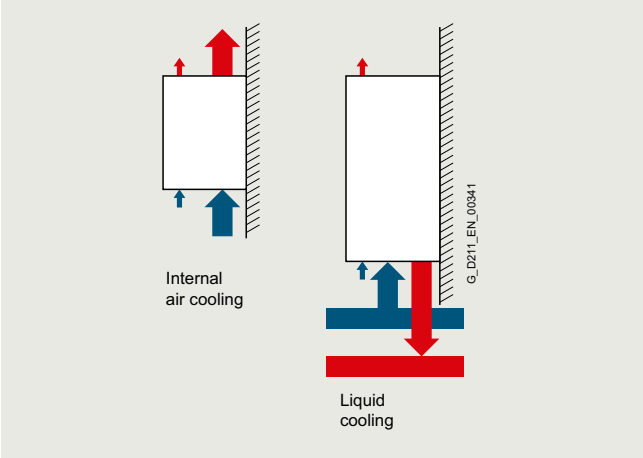

Internal air cooling

In this standard solution, the power loss from the electronics and power units of the drive components is removed by natural cooling or by a forced-ventilation system and routed to the interior of the control cabinet.

Liquid cooling

Onto liquid-cooled units, the power semiconductors are mounted on a heat sink through which the cooling medium flows. Most of the heat produced by the unit is absorbed by the cooling medium and can be dissipated outside the control cabinet.

Types of construction

Power Modules are available in blocksize and chassis formats. Motor Modules and Line Modules are available in booksize, booksize compact, chassis and chassis-2 formats.

Precise details and ordering data on the booksize, booksize compact and blocksize formats are found in Catalog D 21.4 at: www.siemens.com/d21-4

Booksize format

Booksize format units are optimized for multi-axis applications and are mounted adjacent to one another. The connection for the common DC link is an integral feature.

The units are cooled by an internal air cooling circuit.

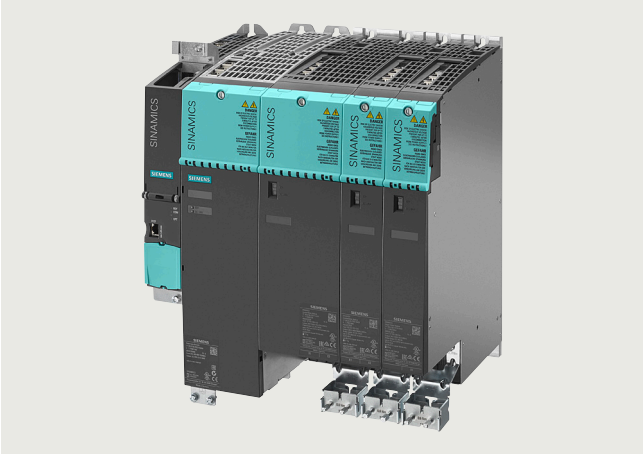

Booksize compact format

Derived from the booksize format we developed the booksize compact format for machines with particularly high requirements for the compactness of their drives.

The booksize compact format combines all benefits of the booksize format and provides the same performance with an even smaller overall height and an extended overload capability.

The booksize compact format is thus particularly suitable for integration into machines requiring a high dynamic performance and where installation space is restricted.

The units are cooled by an internal air cooling circuit.

© Siemens 2024

Design

Blocksize format

Blocksize format units are optimized for single-axis applications and are supplied only as Power Modules.

The CU310-2 can be directly snap-mounted. The units are cooled by an internal air cooling circuit.

Chassis and chassis-2 formats

Higher-output units (approximately 100 kW and above) are constructed in chassis or chassis-2 format. The main components for the formats are:

Chassis format	Chassis-2 format
Power Modules	–
Basic Line Modules	–
Smart Line Modules (air-cooled only)	–
Active Line Modules	Active Infeeds (Active Line Module and Active Interface Module)
Active Interface Modules	
Motor Modules	Motor Modules

Cooling occurs by an internal air cooling unit or liquid cooling. The CU310-2 Control Unit can be integrated in the Power Modules.

Liquid-cooled units are used primarily for applications where installation space is restricted (up to a 60% smaller footprint when compared to air cooling) or where low noise emissions are important. They are also suitable for applications in tough ambient conditions.

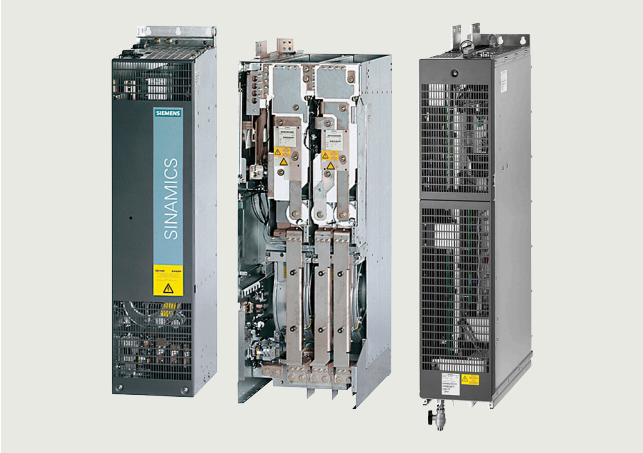

Power units in chassis format, air-cooled and liquid-cooled

Motor Modules in chassis-2 format, air-cooled

© Siemens 2024

Design

Cabinet Modules and Cabinet Modules-2

SINAMICS S120 Cabinet Modules and SINAMICS S120 Cabinet Modules-2 are a modular cabinet system for multi-motor drives with a central supply infeed and a common DC busbar, for example, as used in paper machines, rolling mills, test bays, and hoisting gear.

Cabinet Modules are available with a total power rating of up to 4500 kW in the air-cooled version and up to 5700 kW in the liquid-cooled version.

Cabinet Modules-2 are available with a total power rating of up to 3590 kW in the air-cooled version. The main components of the system are as follows:

Cabinet Modules	Cabinet Modules-2
Line Connection Modules	Active Line Connection Modules (Line Connection Module + Active Line Module + Active Interface Module)
Basic Line Modules	–
Smart Line Modules	–
Active Line Modules including Active Interface Modules	–
Central Braking Modules	–
Motor Modules	Motor Modules
Auxiliary Power Supply Modules	– (combinable with Auxiliary Power Supply Module)

SINAMICS S120 Cabinet Modules, air-cooled and liquid-cooled

SINAMICS S120 Cabinet Modules-2, air-cooled

© Siemens 2024

Overview

The drive solution for demanding single-motor drives

SINAMICS S150 cabinet units are designed for variable-speed drives in plant and machinery construction.

They are especially suitable where high demands are placed on dynamic performance and speed precision, as well as for frequent braking cycles with high braking energies and four-quadrant operation. The drive converter cabinet units provide high performance speed control with a high precision and dynamic performance, and are available for a power range extending from 75 kW up to 1200 kW.

Design

SINAMICS S150 systems are ready-to-connect converters accommodated in a standard control cabinet.

They can be optimally adapted to specific requirements as a result of a wide range of options.

Different variants allow the line and the motor connection to be made at the top or bottom. This ensures a high degree of flexibility regarding how the drive is installed.

The drive units are available with cabinet widths starting from 1400 mm in grid dimension increments of 200 mm. As standard, the cabinets have degree of protection IP20, and can be optionally increased up to IP54. The AOP30 Advanced Operator Panel is fitted as standard in the cabinet door.

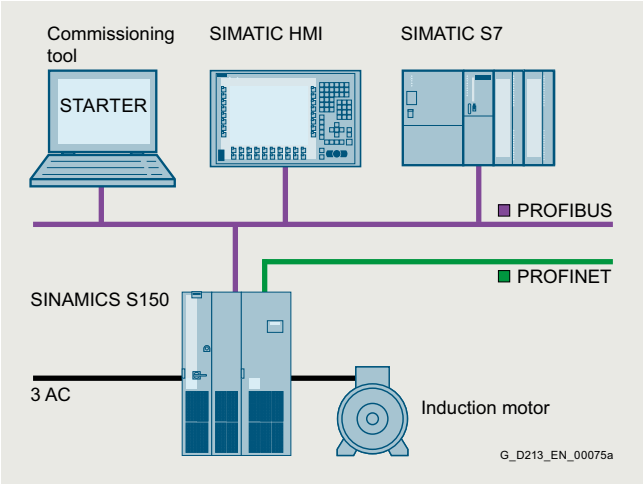

© Siemens 2024

Highlights

2

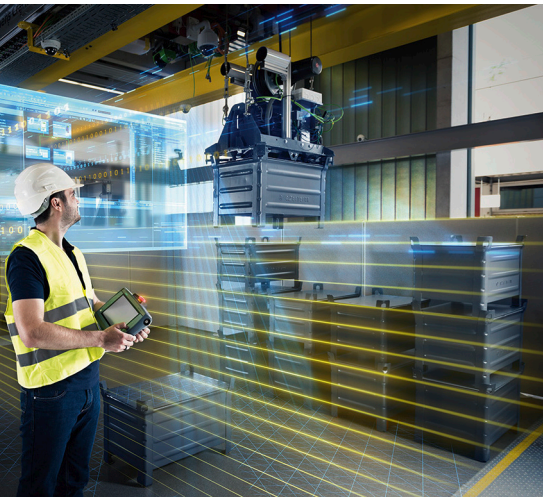

2/2 Safety Integrated
2/2 Overview
2/3 Function

2/14 Safety Integrated for SINAMICS S120 Chassis and Chassis-2 Format Converter Units, SINAMICS S120 Cabinet Modules and Cabinet Modules-2 SINAMICS S150 Drive Converter Cabinet Units
2/14 Overview
2/15 Function

2/16 Communication
2/16 Overview
2/17 PROFINET
2/22 PROFIdrive
2/23 PROFIBUS
2/24 Industrial Ethernet
2/25 EtherNet/IP
2/25 Modbus TCP
2/25 USS

2/26 Technology functions
2/26 Basic positioner EPOS
2/28 SINAMICS Technology Extensions (SINAMICS TEC)

© Siemens 2024

Overview

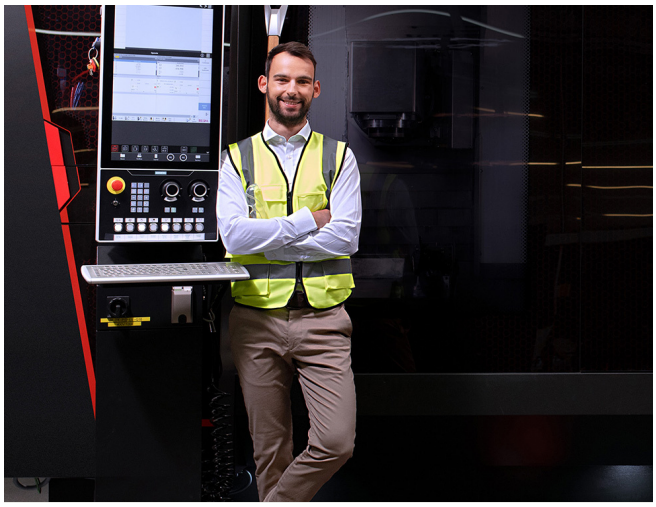

Legal framework

Machine manufacturers and plant construction companies must ensure that their machines or plants cannot cause danger due to malfunctions in addition to the general risks of electric shock, heat or radiation.

In Europe, for example, compliance with the Machinery Directive 2006/42/EC is legally stipulated by the EU framework directive for occupational safety. In order to ensure compliance with this directive, it is recommended that the corresponding harmonized European standards are applied. This triggers the "assumption of conformity" and gives manufacturers and operators the legal security in terms of compliance with both national regulations and EU directives. The machine manufacturer uses the CE marking to document compliance with all relevant directives and regulations in the free movement of goods.

Safety-related standards

Functional safety is specified in various standards. For example, ISO 12100 specifies standards pertaining to machine safety (risk assessment and risk reduction). IEC 61508 specifies basic requirements for electronic and programmable safety-related systems. IEC 62061 (only applicable for electrical and electronic control systems) and ISO 13849-1 define the functional and safety-related requirements of safety-oriented control systems.

The above-mentioned standards define different safety requirements that the machine has to satisfy in accordance with the risk, frequency of a dangerous situation, probability of occurrence and the opportunities for recognizing impending danger.

- ISO 13849-1: Performance Level PL a ... e; Category B, 1 ... 4
- IEC 62061: Safety Integrity Level SIL 1 ... 3

Trend toward integrated safety systems

The trend toward greater complexity and higher modularity of machines has seen a shift in safety functions away from the classical central safety functions (for example, shutdown of the complete machine using a main disconnecting means) and into the machine control system and the drives. This is often accompanied by a significant increase in productivity because the setup times are shortened. Depending on the type of machine, it may even be possible to continue manufacturing other parts while the setup is in progress.

Safety Integrated Functions act much faster than those of a conventional design. The safety of a machine is increased further with Safety Integrated. Furthermore, thanks to the faster method of operation, safety measures controlled by integrated safety systems are perceived as less of a hindrance by the machine operator, therefore significantly reducing the motivation to consciously bypass safety functions.

© Siemens 2024

Function

The safety functions integrated in SINAMICS drives are listed below.

Safety Integrated	S120 S120M		S150
	CU310-2	CU320-2	CU320-2
Functions			
STO	✓	✓	✓
SS1	✓	✓	✓
SS2	✓ 1)	✓ 1)	✓ 1)
SOS	✓ 1)	✓ 1)	✓ 1)
SBC	✓	✓	✓
SBT	✓ 1)	✓ 1)	✓ 1)
SLS	✓ 1)	✓ 1)	✓ 1)
SSM	✓ 1)	✓ 1)	✓ 1)
SDI	✓ 1)	✓ 1)	✓ 1)
SLA	✓ 1)	✓ 1)	✓ 1)
SLP	✓ 2)	✓ 2) 3)	✓ 4)
SP	✓ 2)	✓ 2) 3)	✓ 4)
SCA	✓ 2)	✓ 2) 3)	✓ 4)
Control			
PROFIsafe	✓	✓	✓
F-DI	✓	✓	✓

Safety functions integrated in SINAMICS drives

SINAMICS drives are characterized by a large number of Safety Integrated Functions. In combination with the sensors and safety control required for the safety functionality, they ensure that highly-effective protection for persons and machines is implemented in a practice-oriented manner.

They comply with the requirements of the following safety categories:

- PL d and Category 3 according to ISO 13849-1
- SIL 2 according to IEC 61508 and IEC 61800-5-2

Note:

The Safe Brake Test (SBT) diagnostic function meets the requirements for Category 2 according to ISO 13849-1.

The PM240-2 Power Modules, frame sizes FSD to FSG additionally offer STO acc. to IEC 61508 SIL 3 and ISO 13849-1 PL e and Category 3.

The Safety Integrated functions are generally certified by independent institutes. You can obtain the corresponding test certificates and manufacturer's declarations from your Siemens contacts.

The Safety Integrated Functions that are currently available are described below. Their functional safety satisfies the requirements defined in the international standard IEC 61800-5-2 for variable-speed drive systems.

The safety functions integrated into the SINAMICS drive system can be roughly divided into four categories:

- **Functions for safely stopping a drive**
  - Safe Torque Off (STO)
  - Safe Stop 1 (SS1)
  - Safe Stop 2 (SS2)
  - Safe Operating Stop (SOS)
- **Functions for safe brake management**
  - Safe Brake Control (SBC)
  - Safe Brake Test (SBT) (this diagnostic function exceeds the scope of IEC 61800-5-2)
- **Functions for safely monitoring the motion of a drive**
  - Safely-Limited Speed (SLS)
  - Safe Speed Monitor (SSM)
  - Safe Direction (SDI)
  - Safely-Limited Acceleration (SLA)
- **Functions for safely monitoring the position of a drive**
  - Safely-Limited Position (SLP)
  - Safe Position (SP) (this function exceeds the scope of IEC 61800-5-2)
  - Safe Cam (SCA)

1) With Safety Extended license.
2) With Safety Advanced license.
3) Safety Advanced license for cabinet modules on request.
4) Safety Advanced license on request.

© Siemens 2024

Function

Safe Torque Off (STO)

The STO function is the most common and basic drive-integrated safety function. It ensures that no torque-generating energy can continue to affect a motor and prevents unintentional start-ups.

Effect

This function is a mechanism that prevents the drive from restarting unexpectedly, in accordance with EN 60204-1, Section 5.4. The STO function suppresses the drive pulses (corresponds to Stop Category 0 according to EN 60204-1). The drive is reliably torque-free. This state is monitored internally in the drive.

Application

STO has the immediate effect that the drive cannot supply any torque-generating energy. STO can be used wherever the drive will naturally reach a standstill due to load torque or friction in a sufficiently short time or when "coasting down" of the drive will not have any relevance for safety.

STO makes it possible for persons to work safely when the protective door is open (restart interlock) and is used on machines/installations with moving axes, e.g. on handling or conveyor systems.

Customer benefits

Some of the advantages of the Safety Integrated Function STO over conventional safety technology with electromechanical switchgear include the elimination of separate components as well as of the work that would be required to wire and service them, i.e. no wearing parts as a result of the electronic shutdown. Because of the fast electronic switching times, the function provides a shorter reaction time than the conventional solution comprising electromechanical components. When STO is triggered, the converter remains connected to the network and can be fully diagnosed.

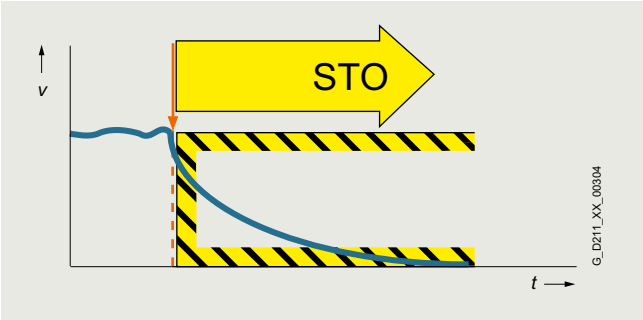

Safe Stop 1 (SS1)

The SS1 function causes a motor to stop rapidly and safely and switches the motor to torque-free mode after coming to a standstill by activating STO.

Effect

The SS1 function can safely stop the drive in accordance with EN 60204-1, Stop Category 1. When the SS1 function is selected, the drive brakes autonomously along a quick-stop ramp and automatically activates the Safe Torque Off and Safe Brake Control functions (if configured) when the parameterized safety delay time expires.

If the variant "SS1 with external stop (SS1E)" is parameterized, the drive does not brake autonomously when the function is selected. In this case, the higher-level control must bring the drive to a standstill within a parameterized STO transition time. The SBR (Safe Brake Ramp) and SAM (Safe Acceleration Monitor) functions are not active. SS1E is a useful function for drives that need to be stopped as a group by the Motion Control system in order to prevent potential damage to the machine or product.

Application

The SS1 function is used when, in the event of a safety-relevant incident, the drive must stop as quickly as possible with a subsequent transition into the STO state (e.g. EMERGENCY STOP). It is thus used to bring large centrifugal masses to a stop as quickly as possible for the safety of the operating personnel, or to brake motors at high speeds as quickly as possible. Examples of typical applications are saws, grinding machine spindles, centrifuges, winders and storage and retrieval machines.

Customer benefits

The targeted stopping of a drive by means of SS1 reduces the risk of danger, increases the productivity of a machine, and allows the safety clearances in a machine to be reduced. The principle is to bring the drive actively to a standstill, compared with just using the STO function. Complex mechanical brakes that are susceptible to wear are normally not required to brake the motor.

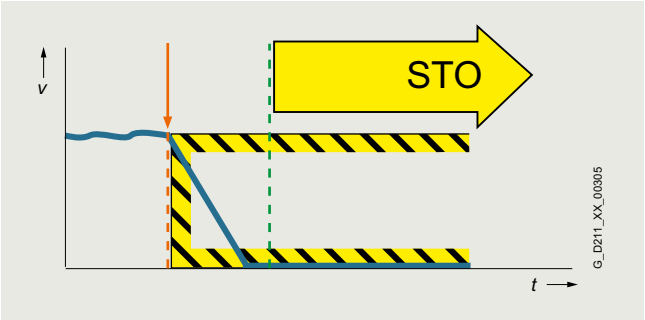

© Siemens 2024

Function

Safe Stop 2 (SS2)

The SS2 function brings the motor to a standstill quickly and safely and then activates the SOS function once the motor has stopped.

Effect

The Safe Stop 2 function can safely stop the drive in accordance with EN 60204-1, Stop Category 2. When the SS2 function is selected, the drive brakes autonomously along a quick stop ramp. In contrast to SS1, the drive control remains operational afterwards, i.e. the motor can supply the full torque required to maintain zero speed. Standstill is safely monitored (Safe Operating Stop function).

If the variant "SS2 with external stop (SS2E)" is parameterized, the drive does not brake autonomously when the function is selected. In this case, the higher-level control must bring the drive to a standstill within a parameterized Safe Operating Stop transition time. The SBR (Safe Brake Ramp) and SAM (Safe Acceleration Monitor) functions are not active. SS2E is a useful function for drives that need to be stopped as a group by the Motion Control system in order to prevent potential damage to the machine or product.

Application

As with SS1, the SS2 function ensures the quickest possible deceleration of the motor. However, the motor power is not switched off. Instead, a control system prevents it from leaving the standstill position – even if it is affected by external forces. Typical applications for SS2 include machine tools, for example.

Customer benefits

The SS2 function ensures a rapid axis stop. Because the control remains active, after the safety function is deselected, productive operation can continue without referencing. This ensures short setup and standstill times and high productivity.

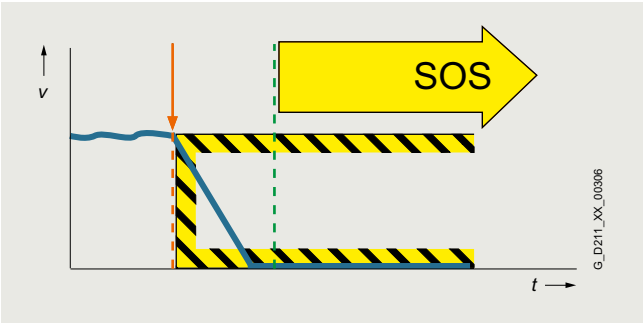

Safe Operating Stop (SOS)

With the SOS function, the stopped motor is held in position by the drive control system and its position is monitored.

Effect

The SOS function constitutes safe standstill monitoring. The drive control remains in operation. The motor can therefore deliver the full torque to hold the current position. The actual position is reliably monitored. In contrast to safety functions SS1 and SS2, the speed setpoint is not influenced autonomously. After SOS has been activated, the higher-level control must bring the drive to a standstill within a parameterized time and then hold the position setpoint.

Application

SOS is an ideal solution for all those applications for which the machine or parts of the machine must be at a safe standstill for certain steps, but the drive must also supply a holding torque. It is ensured that despite counter torque the drive remains in its current position. In contrast to SS1 and SS2, the drive does not brake autonomously in this case. It expects the higher-level controller to ramp down the relevant axes as a coordinated group within an adjustable delay time. This can be used to prevent any damage to the machine or product. Typical applications for SOS include winders, converting and packaging machines and machine tools.

Customer benefits

No mechanical components are necessary to keep the axis in position despite any counterforce that may occur. Due to the short switching times and the fact that the drive control always remains active, setup and downtimes are reduced. Recalibration of the axis after exiting the SOS function is not necessary. The axis can immediately be moved again after deactivation of the SOS function.

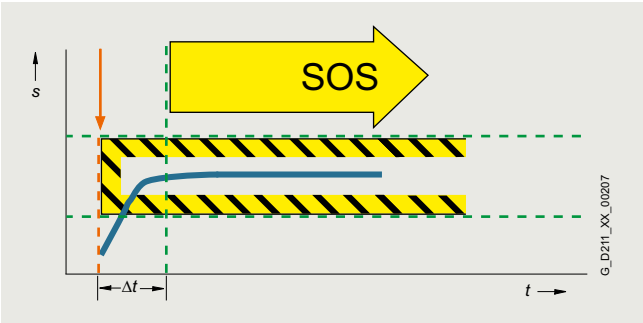

© Siemens 2024

Function

Safe Brake Control (SBC)

The SBC function permits the safe control of a holding brake. SBC is always activated in parallel with STO.

Effect

A holding brake which is active in a de-energized state is controlled and monitored using safe two-channel technology. Due to the two-channel control, the brake may still be activated in the event of an insulation fault in the control cable. Errors of this kind are detected early by means of test pulses.

Note:

Safe Brake Control does not detect mechanical faults in the brake itself, such as worn brake linings. For Motor Modules in booksize format, the terminals for the motor brake are integrated. An additional Safe Brake Relay is required for Power Modules in blocksize format. An additional Safe Brake Adapter is necessary for Power Modules in chassis format.

Application

The SBC function is used in conjunction with the functions STO or SS1 to prevent the movement of an axis in the torque-free state, e.g. because of gravity.

Customer benefits

Again, the function saves the use of external hardware and the associated wiring.

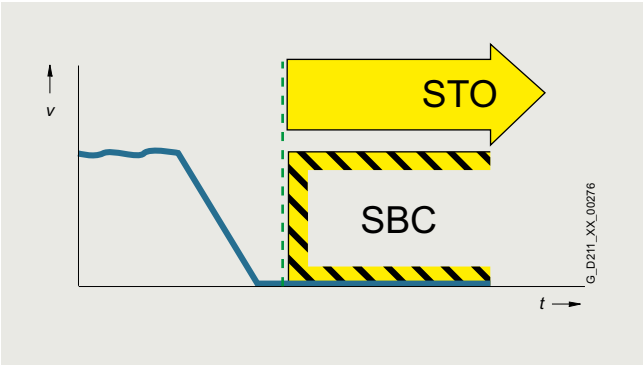

Safe Brake Test (SBT)

The SBT diagnostic function carries out a brake function test at regular intervals or before personnel enter the danger zone.

Effect

A good way to check the proper functioning of brakes that have become worn is to apply a torque to the closed brake. Drive systems that have two brakes, e.g. motor brake and external brake, can be tested with different torque values.

Application

The SBT diagnostic function is suitable for implementing a safe brake in combination with the SBC function.

Customer benefits

The function detects faults or wear in the brake mechanics. Automatically testing the effectiveness of brakes reduces maintenance costs and increases the safety and availability of the machine or plant.

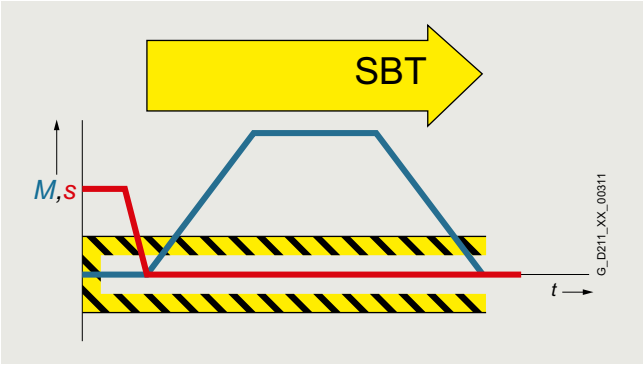

© Siemens 2024

Function

Safely-Limited Speed (SLS)

The SLS function monitors the drive to ensure that it does not exceed a preset speed or velocity limit.

Effect

The SLS function monitors the drive against a parameterized speed limit. Four different limit values can be selected. As in the case of SOS, the speed setpoint is not influenced independently. After SLS has been selected, the higher-level control must bring the drive down below the selected speed limit within a parameterizable time. If the speed limit is exceeded, a customizable drive-integrated fault reaction occurs.

The SLS limit stage 1 can be multiplied by a factor that is transferred in 16-bit resolution via PROFIsafe. This allows an almost unlimited number of limits to be specified.

Application

The SLS function is used if people are in the danger zone of a machine and their safety can only be guaranteed by reduced speed. Typical application cases include those in which an operator must enter the danger zone of the machine for the purposes of maintenance or setting up, such as a winder in which the material is manually threaded by the operator. To prevent injury to the operator, the roller may only spin at a safely reduced speed. SLS is often also used as part of a two-stage safety concept. While a person is in a less critical zone, the SLS function is activated, and the drives are only stopped safely in a smaller area with higher potential risk. SLS can be used not only for operator protection, but also for machinery protection, e.g. if a maximum speed must not be exceeded.

Customer benefits

The SLS function can contribute to a significant reduction in downtime, or greatly simplify or even accelerate setup. The overall effect achieved is a higher availability of the machine. Moreover, external components such as speed monitors can be omitted.

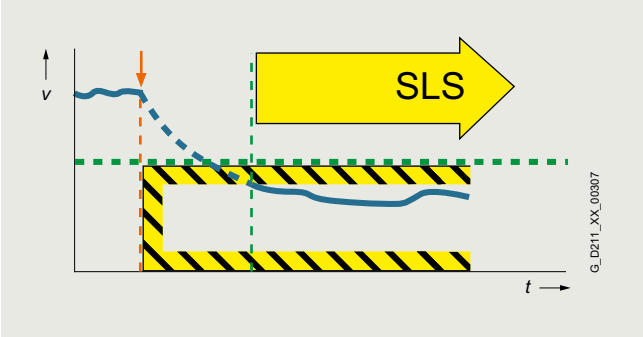

Safe Speed Monitor (SSM)

The SSM function warns when a drive is working below an adjustable speed limit. As long as it remains below the threshold, the function issues a safety-related signal.

Effect

If a speed value drops below a parameterized limit, a safety-related signal is generated. This can, for example, be processed in a safety control unit to respond to the event by programming, depending on the situation.

Application

With the SSM function, in the simplest case, a safety door can be unlocked if the speed drops below a non-critical level. Another typical example is that of a centrifuge that may be filled only when it is operating below a configured speed limit.

Customer benefits

Unlike SLS, there is no drive-integrated fault reaction when the speed limit is exceeded. The safe feedback can be evaluated in a safety control unit, allowing the user to respond appropriately to the situation.

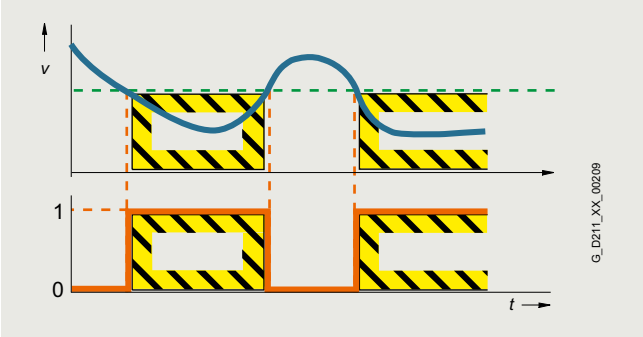

© Siemens 2024

Function

Safe Direction (SDI)

The SDI function ensures that the drive can only move in the selected direction.

Effect

Deviation from the direction of motion currently being monitored is detected reliably and the configured drive-integrated fault reaction is initiated. It is possible to select which direction of rotation is to be monitored.

Application

The SDI function is used when the drive may only move in one direction. A typical application is to permit the operator access to a danger zone, as long as the machine is rotating in the safe direction, i.e. away from the operator. In this state, the operator can feed material into the work zone or remove material from the work zone without danger.

Customer benefits

The function saves the use of external components such as speed monitors and the associated wiring. The release of a danger zone while the machine is moving away from the operator increases productivity. Without the SDI function, the machine must be safely stopped during material loading and removal.

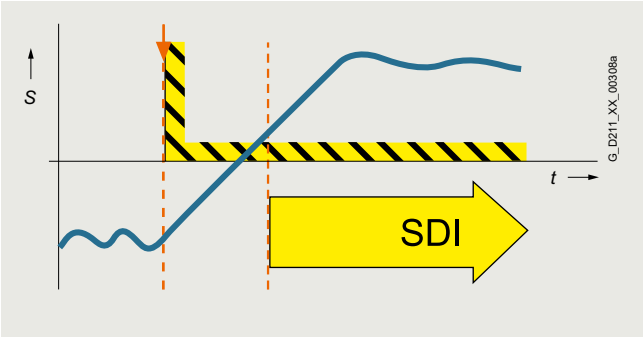

Safely-Limited Acceleration (SLA)

The SLA function monitors that the drive does not exceed a preset acceleration limit value.

Effect

The SLA function monitors that the motor does not violate the defined acceleration limit (e.g. in setup mode). SLA detects early on whether the speed is increasing at an inadmissible rate (the drive accelerates uncontrollably) and initiates the stop response.

Application

The SLA function is used, e.g., for SIMATIC Safe Kinematics.

Customer benefits

The function monitors for maximum permissible acceleration in setup mode and safe monitoring of the tool center point with different kinematics.

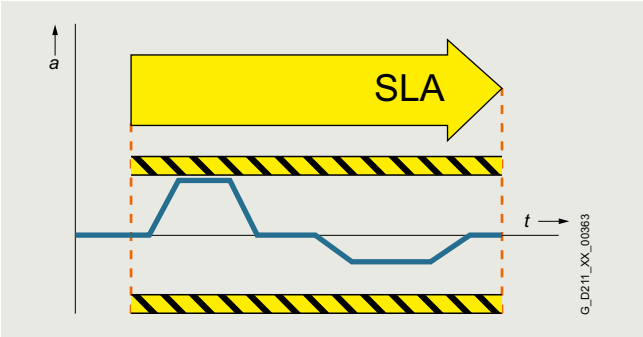

© Siemens 2024

Function

Safely-Limited Position (SLP)

The SLP function monitors the axis to ensure that it remains within the permissible traversing range.

Effect

When SLP is activated, the traversing range limited by the configured software limit switches is safely monitored. If the permitted traversing range is exited, a configurable fault reaction occurs. It is possible to toggle between two traversing ranges, even when the machine is in operation.

Application

SLP is used for applications in which machine operators have to enter a protection area, e.g. for feeding in and removing material. Safe monitoring of the axis position ensures that the axis cannot move into the protection area released for operators and so place them in danger, for example, on storage and retrieval machines, gantry cranes or machining centers.

Customer benefits

SLP can be used for highly-effective protection area monitoring. The function does away with the use of external components such as hardware limit switches and the associated wiring expense. Due to the short reaction time following a limit overshoot, safety clearances can be reduced.

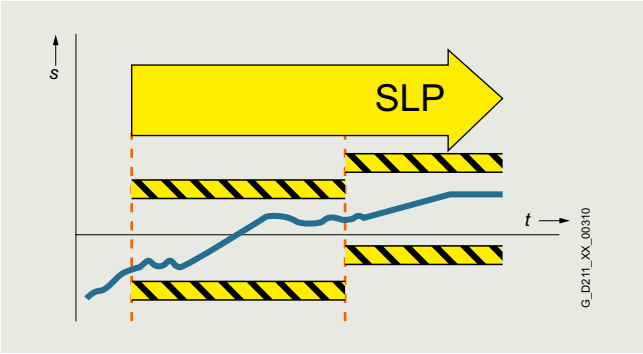

Safe Position (SP)

The SP function transfers the actual position values determined safely in the drive over safe PROFIsafe communication to a safety control.

Effect

In contrast to the SLP function that monitors the current actual position value against a limit and, in the case of an overshoot, activates a drive-integrated fault reaction, SP transfers the current actual position values to the safety control. Position monitoring is implemented in the safety program of the control. Extended PROFIsafe telegrams are available for transferring the position values. The position values can be transferred in 16-bit or 32-bit resolution, as required. A time stamp is also transferred with the position values.

Application

Tailor-made safety concepts can be created using the SP function. It is ideal for use on machines that require flexible safety functions. It is extremely versatile and can be used, for example, to implement safe, axis-specific range detection by means of safe cams. The SP function can also be used to implement multi-axis safety concepts, multi-dimensional protection areas and zone concepts.

Customer benefits

Position monitoring or speed monitoring is implemented in the safety program of the control, so the user has the flexibility for implementing tailor-made safety functions. The reaction to a limit overshoot must also be specified in the safety program. This means a higher initial programming outlay, but it does offer the opportunity for initiating different fault reactions depending on the situation.

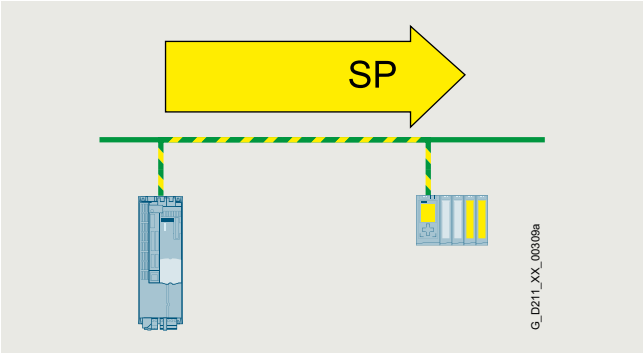

© Siemens 2024

Function

Safe Cam (SCA)

The SCA function enables safety-related monitoring of the position.

Effect

The SCA function outputs a safe signal if the drive is within a specified position range. It facilitates the realization of safe axis-specific range detection. Up to 30 safe cams can be parameterized per axis.

Application

It is only permissible that a protective door is opened if a drive is in a certain position range. The drive may only be traversed with reduced speed when it is located in a certain position range.

Customer benefits

The function enables safety-related switchover of safety functions. With SCA, safe electronic cam controllers can be implemented without additional hardware. With SCA, work and protection zone delimitations are reliably detected.

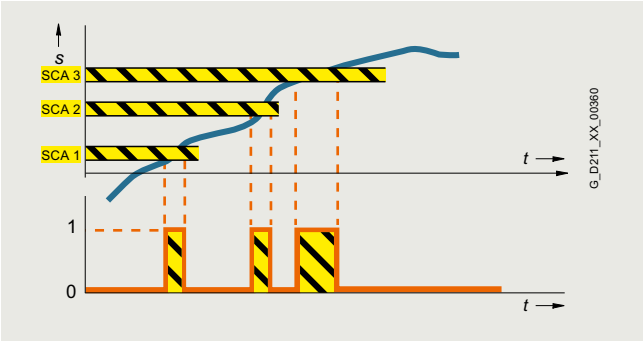

© Siemens 2024

Function

Basic Functions, Extended Functions, and Advanced Functions

With SINAMICS G converters, the safety functions are basically implemented without encoders.

With SINAMICS S drives, the safety functions are implemented with encoders – individual safety functions can also be operated without encoders.

The Safety Integrated Functions are grouped into Basic Functions, Extended Functions, and Advanced Functions.

The Basic Functions are included in the standard scope of supply.
The Extended Functions must be activated by a license.
The Advanced Functions for SINAMICS S120 must also be activated via a license.

The electronic Certificate of License is the paperless delivery form for runtime options for SINAMICS and contains information about the type of rights of use purchased for the software.

- Basic Functions
  - Safe Torque Off (STO)
  - Safe Brake Control (SBC)
  - Safe Stop 1 (SS1)
- Extended Functions
  - Safe Stop 1 (SS1) with SBR or SAM
  - Safe Stop 2 with external stop (SS2E)
  - Safe Stop 2 (SS2) with SBR or SAM
  - Safe Operating Stop (SOS)
  - Safely-Limited Speed (SLS)
  - Safe Speed Monitor (SSM)
  - Safe Direction (SDI)
  - Safely-Limited Acceleration (SLA)
  - Safe Brake Test (SBT) diagnostic function
- Advanced Functions
  - Safely-Limited Position (SLP)
  - Safe Position (SP)
  - Safe Cam (SCA)

The license for Safety Integrated Advanced Functions also includes the license for Safety Integrated Extended Functions.

For the Extended Functions SS1 and SS2 with SAM, Safe Acceleration Monitor (SAM) is performed during braking to identify any faults already during the braking phase.

With SS1 and SS2, a Safe Brake Ramp (SBR) can be configured as an alternative. SS1 can also be parameterized with an external stop (SS1E).

The Basic Functions – activated via on-board terminals on the device, TM54F Terminal Module (only for SINAMICS S) or via PROFIsafe – do not require an encoder.

Activation of the Safety Integrated Functions

The safety functions for SINAMICS drives can be activated via terminals, e.g. for use of a conventional safety circuit.

For standalone safety solutions for small to medium-sized applications, it is frequently sufficient that the various sensing components are directly hardwired to the drive.

For integrated safety solutions, the safety-relevant sequences are generally processed and coordinated in the fail-safe SIMATIC controller. Here, the system components communicate via the PROFINET or PROFIBUS fieldbus. The safety functions are controlled via the safe PROFIsafe communication protocol.

SINAMICS drives can be easily integrated into the plant or system topology.

PROFIsafe

SINAMICS drives support the PROFIsafe profile based on PROFINET as well as on PROFIBUS.

PROFIsafe is an open communications standard that supports standard and safety-related communication over the same communication path (wired or wireless). A second, separate bus system is therefore not necessary. The telegrams that are sent are continually monitored to ensure safety-relevant communication.

Possible errors such as telegrams that have been lost, repeated or received in the incorrect sequence are avoided. This is done by consecutively numbering the telegrams in a safety-relevant fashion, monitoring their reception within a defined time and transferring an ID for transmitter and receiver of a telegram.
A CRC (cyclic redundancy check) data security mechanism is also used.

The operating principle of Safety Integrated

Two independent switch-off signal paths

Two independent switch-off signal paths are available.
All switch-off signal paths are low active. This ensures that the system is always switched to a safe state if a component fails or in the event of cable breakage. If a fault is discovered in the switch-off signal paths, the STO or SS1 function (depending on parameter settings) is activated and a system restart inhibited.

Two-channel monitoring structure

All the main hardware and software functions for Safety Integrated are implemented in two independent monitoring channels (e.g. switch-off signal paths, data management, data comparison). A cyclic crosswise comparison of the safety-relevant data in the two monitoring channels is carried out.

The monitoring functions in each monitoring channel work on the principle that a defined state must prevail before each action is carried out and a specific acknowledgement must be made after each action. If these expectations of a monitoring channel are not fulfilled, the drive coasts to a standstill (two channel) and an appropriate message is output.

Forced dormant error detection using test stop

The functions and switch-off signal paths must be tested at least once within a defined time in order to meet requirements as per ISO 13849-1 and IEC 61508 in terms of timely fault detection. This must be implemented either in cyclic manual mode or the test stop must be automatically initiated as part of the process. The test stop cycle is monitored, and after a specific time has been exceeded, an alarm is output. A test stop does not require a POWER ON. The acknowledgment is set by canceling the test stop request.

Examples of when forced dormant error detection must be performed:

- When the drives are at a standstill after the system has been switched on
- Before the protective door is opened
- At defined intervals (e.g. every 8 hours)
- In automatic mode, time and event-driven

© Siemens 2024

Function

Safe speed/position sensing without/with encoder

Safe actual value sensing without encoder

A drive monitor with encoder is necessary for operation of a series of safety functions.

For applications with encoderless mode or with encoders that have no safety capability, the safety functions can also be implemented without encoder. It is not possible to use all safety functions in this case.

For chassis format devices, encoderless safety functions can be implemented on request (see SINAMICS S120 Safety Integrated and SINAMICS G130, G150, S120 Chassis, S120 Cabinet Modules, S150; Safety Integrated Function Manuals).

In operation without encoder, the actual speed values are calculated from the measured electrical actual values. This means that speed monitoring is also possible during operation without an encoder.

Safety Integrated Extended Functions "without encoder" must **not** be used if the motor, after it has been switched off, can still be accelerated by the mechanical elements of the connected machine component.

Safe actual value sensing with encoder

Incremental encoders or absolute encoders can be used for safe sensing of the position values on a drive.

Safe actual value sensing relies on redundant evaluation of the incremental tracks A/B that supply sin/cos signals of 1 V_{pp}. Only encoders of the type whose A/B track signals are created and processed using purely analog techniques can be used. The encoder signals are input via the SMC20 Sensor Module Cabinet-Mounted (Option **K48** for cabinets).

HTL/TTL incremental encoders may also be used. In this case, safe actual value sensing is achieved by using two independent encoders. The minimum possible speed resolution must also be taken into account.The encoder signals are input via the SMC20 Sensor Module Cabinet-Mounted (Option **K50, K52** for cabinets).

As an alternative, motors with an integrated DRIVE-CLiQ interface can be used. The speed or position actual values are generated directly in the motor as safe values and are transferred to the Control Unit over safe communication via DRIVE-CLiQ.

Certified built-on rotary encoders with DRIVE-CLiQ interface may also be used (see https://support.industry.siemens.com/cs/document/65402168).

The encoder must be mechanically attached in such a manner that the encoder shaft is unable to unplug or slide off. For notes on this, see IEC 61800-5-2: 2016, Table D.16.

A list of Siemens motors that fulfill the electrical and mechanical requirements is available at: https://support.industry.siemens.com/cs/document/33512621

The following can be used for safe speed/position sensing:

- Single-encoder systems or
- Dual-encoder systems

Single-encoder system

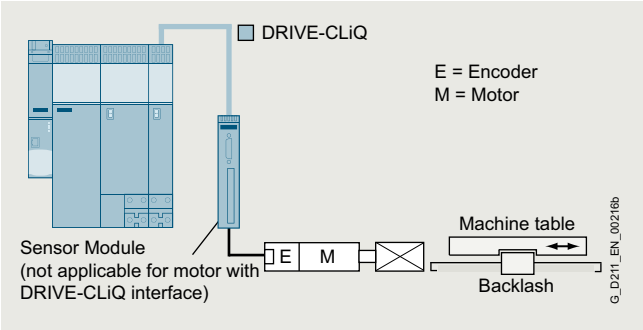

Example: Single-encoder system

In a single-encoder system, the motor encoder is used exclusively for safe actual value sensing.

Dual-encoder system

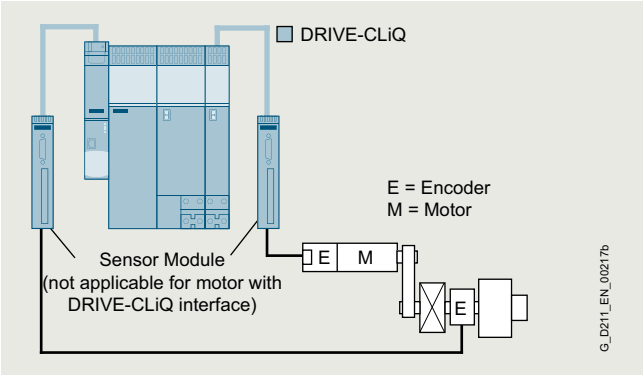

Example: Dual-encoder system

In the case of the dual-encoder system, the safe actual values for a drive are provided by two separate encoders. The actual values are transferred to the Control Unit over DRIVE-CLiQ. When motors without a DRIVE-CLiQ connection are used, a Sensor Module must be provided.

HTL/TTL incremental encoders can be used as an alternative with a dual-encoder system. Either two HTL/TTL encoders, one dual-HTL/TTL encoder or one HTL/TTL encoder and one sin/cos encoder can be used.

© Siemens 2024

Function

The safety functions are listed below with criteria for actual value sensing:

	Functions	Abbreviation	With encoder	Without encoder	Description
Basic Functions	Safe Torque Off	STO	Yes	Yes	Safe Torque Off
	Safe Stop 1	SS1	Yes	Yes [1]	Safe stopping process in accordance with stop category 1
	Safe Brake Control	SBC	Yes	Yes	Safe Brake Control
Extended Functions	Safe Torque Off	STO	Yes	Yes	Safe Torque Off
	Safe Stop 1	SS1	Yes	Yes [1]	Safe stopping process in accordance with stop category 1
	Safe Brake Control	SBC	Yes	Yes	Safe Brake Control
	Safe Operating Stop	SOS	Yes	No	Safe monitoring of the standstill position
	Safe Stop 2	SS2	Yes	No	Safe stopping process in accordance with stop category 2
	Safely-Limited Speed	SLS	Yes	Yes [1]	Safe monitoring of the maximum speed
	Safe Speed Monitor	SSM	Yes	Yes [1]	Safe monitoring of the minimum speed
	Safe Direction	SDI	Yes	Yes [1]	Safe monitoring of the direction of motion
	Safely-Limited Accelera-tion	SLA	Yes	No	Safely-Limited Acceleration
	Safe Brake Test	SBT	Yes	No	Diagnostic function for safe testing of the required holding torque of a brake
Advanced Functions	Safely-Limited Position	SLP	Yes	No	Safely-Limited Position
	Safe Position	SP	Yes	Yes [2]	Safe transfer of position values
	Safe Cam	SCA	Yes	No	Safe cams

More information

The Safety Integrated Function Manual contains detailed information about the safety functions
https://support.industry.siemens.com/cs/document/109781722

Further manuals pertaining to Safety Integrated in drive systems can be found on the internet at
https://support.industry.siemens.com/cs/ww/en/ps/13206/man

More information about Safety Integrated in SINAMICS can be found on the internet at
www.siemens.com/safety-drives

[1] The use of this safety function without encoder is permitted with asynchronous (induction) motors, synchronous motors from the SIEMOSYN series, or with SIMOTICS reluctance motors.

[2] Only for the transmission of relative position values. An encoder is required to transmit absolute position values.

© Siemens 2024

Safety Integrated for SINAMICS S120 Chassis/Cabinet Modules/S150

Overview

The safety functions integrated into the drive can greatly reduce the effort required to implement safety concepts.

The Safety Integrated functions are implemented electronically and therefore offer short response times in comparison to solutions with externally implemented monitoring functions.

As an alternative to controlling via terminals and/or PROFIsafe, there is also the option to parameterize several Safety Integrated functions without selection. In this mode, after parameterization and a POWER ON, these functions are permanently selected.

Example

"SLS without selection" can be used, for example, to monitor the maximum velocity to prevent the drive from exceeding a mechanical speed limit. For this purpose, use of the "SLS without selection" function means that an F-DI is not needed.

Licensing

No license is required for the Basic Functions.

The Extended and Advanced Functions require a license for each axis with safety functions. It is of no consequence here which safety functions are used and how many.

The license can be ordered as an option with the memory card. Alternatively, a single-user license can also be purchased.

The electronic Certificate of License is the paperless delivery form for runtime options for SINAMICS and contains information about the type of rights of use purchased for the software.
The electronic Certificate of License is supplied as a PDF file via the Online Software Delivery Portal (OSD).
This enables quick notification with a download link to the email address to be stated in the order.
The Web License Manager can also be called from the OSD to assign the runtime license to a memory card.
In this case, the data of the electronic Certificate of License are automatically transferred to the Web License Manager and do not have to be entered manually.
This ensures quick availability of the license key and simple and secure handling and management of the license certificates.
You will find information on the OSD at:
https://support.industry.siemens.com/cs/ww/en/view/109759444

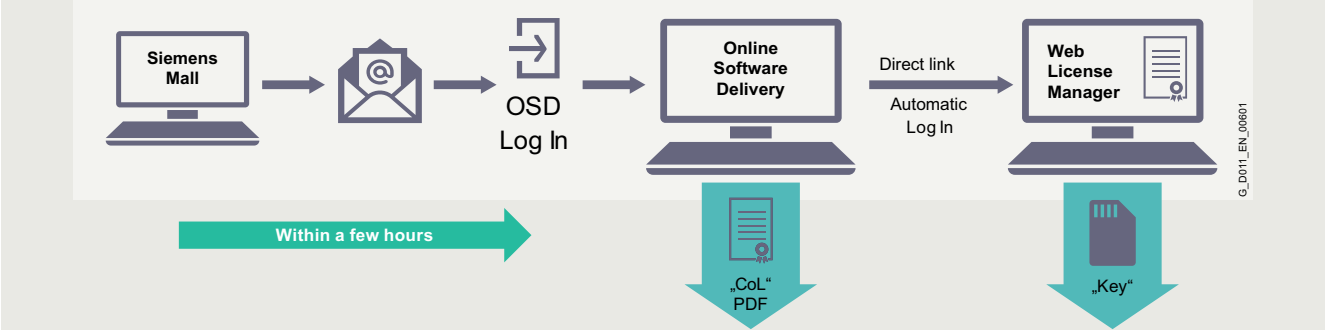

The licenses for SINAMICS S120 Chassis and Chassis-2 format units can be ordered as option **F01 to F06** (Extended Functions) or **A01 to A06** (Advanced Functions) for specific axes at the same time as the memory card.

The Certificates of License are stored in directory "KEYS".

For SINAMICS S120 Cabinet Modules and Cabinet Modules-2, the licenses for Safety Extended Functions can be ordered for specific axes with the options **K01 to K05** for Motor Modules. Safety Advanced Functions are available on request.

The license for Safety Extended Functions for SINAMICS S150 can be ordered as option **K01**. Safety Advanced Functions are available on request.

Safe Brake Adapter

The Safe Brake Control (SBC) function requires a Safe Brake Adapter (option **K88** for SINAMICS S120 Cabinet Modules and SINAMICS S150). The Safe Brake Control is integrated in Motor Modules in booksize format.

The Safe Brake Adapter and the brake control that is integrated in the booksize format allows safe control of electro-mechanical motor brakes.

The Safe Brake Adapter controls 230 V AC brakes. The SBC function monitors the control of the brake, however, not its mechanical functioning.

The converter controls the connected brake using the motor holding brake function.

External surge suppressors are not required. The cable harnesses for connection to the Power Module are included in the scope of supply.

The brake is controlled in accordance with IEC 61508 SIL 2 and EN ISO 13849-1 PL d and Category 3.

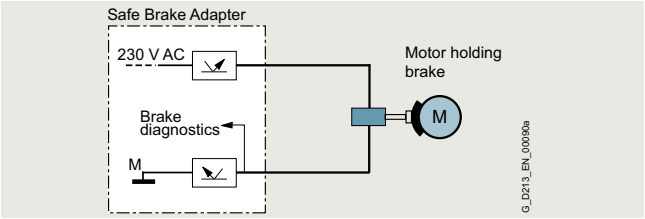

Safe Brake Control (SBC)

© Siemens 2024

Function

Overview of Safety Integrated functions

Function	Control	Underlying function	Reaction to limit overshoot	External setpoint input effective	Encoder required [1]	License required
Basic Functions						
STO	• EP terminals on the power unit and a DI on the Control Unit • Terminal module (option **K82** [2]) • F-DI on TM54F • F-DI on CU310-2/D4xx/CX32 • PROFIsafe	SBC (if activated)	–	No	No	No
SBC	• With STO (immediately or following expiry of the delay time with SS1) • Via Safe Brake Adapter [2]	–	–	–	No	No
SS1	• EP terminals on the power unit and a DI on the Control Unit • Terminal module (option **K82** [2]) • F-DI on TM54F • F-DI on CU310-2/D4xx/CX32 • PROFIsafe	STO, following expiry of the parameterized delay time, SBC (if activated)	STO	Can be parameterized	No	No
Extended Functions						
STO	• F-DI on TM54F • F-DI on CU310-2/D4xx/CX32 • PROFIsafe	SBC (if activated)	–	No	Yes	Yes
SS1 with SBR/SAM	• F-DI on TM54F • F-DI on CU310-2/D4xx/CX32 • PROFIsafe	Safe Acceleration Monitor (SAM) or Safe Brake Ramp (SBR) during braking. STO and SBC (if activated) following expiry of the parameterized delay time or if the speed falls below the minimum speed limit	STO	Can be parameterized	No	Yes
SS2	• F-DI on TM54F • F-DI on CU310-2/D4xx/CX32 • PROFIsafe	Safe Acceleration Monitor (SAM) during braking. Following expiry of the parameterized delay time SOS	SS1 → STO	No	Yes	Yes
SLS encoder-less	• F-DI on TM54F • F-DI on CU310-2/D4xx/CX32 • PROFIsafe • Continuously activated	–	STO, SS1 (can be parameterized)	Yes	No	Yes
SLS	• F-DI on TM54F • F-DI on CU310-2/D4xx/CX32 • PROFIsafe • Continuously activated	–	STO, SS1, SS2 or SOS (can be parameterized)	Yes	Yes	Yes
SOS	• F-DI on TM54F • F-DI on CU310-2/D4xx/CX32 • PROFIsafe	–	SS1 → STO	Yes	Yes	Yes
SSM	• Always active, if configured	–	Signals that the speed has fallen below a specified value	Yes	No	Yes
SDI	• F-DI on TM54F • F-DI on CU310-2/D4xx/CX32 • PROFIsafe • Continuously activated	–	STO, SS1, SS2 or SOS (can be parameterized)	Yes	No	Yes
SLA	• F-DI on TM54F • PROFIsafe	–	STO, SS1, SS2 (can be parameterized)	Yes	Yes	Yes
SBT	• Safety Control Channel • BICO signals • for test stop selection	–	Signals test result. Warning if test fails	Yes	Yes	Yes
Advanced Functions						
SLP [3]	• F-DI on TM54F • F-DI on CU310-2/D4xx/CX32 • PROFIsafe	–	STO, SS1, SS2 or SOS (can be parameterized)	Yes	Yes	Yes
SP [3]	• Always active, if configured	–	–	Yes	Yes	Yes
SCA [3]	• PROFIsafe	–	can be parameterized	Yes	Yes	Yes

[1] The encoderless Safety Extended Functions can be implemented only on request for SINAMICS S120 chassis format units and cabinet units.

[2] In addition for SINAMICS S120 Cabinet Modules and SINAMICS S150 converter cabinet units (option **K88**).

[3] SINAMICS S120 Cabinet Modules and SINAMICS S150 Converter Cabinet Units available on request

© Siemens 2024

Overview

Communication overview

Digital bus systems are commonly used in industrial automation today. These handle communication between the control level, the machine control, the sensors and actuators. The SINAMICS product family offers integrated communication interfaces in all product groups – which can be used to connect the most important fieldbus systems in the simplest possible way.

The properties and special application areas of the different bus systems are described briefly below. The following table provides an overview of the available reports for the CU310-2 and CU320-2 Control Units.

Protocol	S120 S120M		S150
	CU310-2	CU320-2	CU320-2
PROFINET	✓	✓	✓
• PROFINET RT	✓	✓	✓
• PROFINET IRT isochronous	✓	✓	✓
• PROFINET IRT non-isochronous	✓	✓	✓
• PROFINET Shared Device	✓	✓	✓
• PROFINET media redundancy MRP (surge prone)	✓	✓	✓
• PROFINET media redundancy MRPD (surge free)	✓	✓	✓
• System redundancy S2	✓	✓	✓
• PROFIsafe	✓	✓	✓
• PROFIenergy	✓	✓	✓
• PROFIdrive application class 1	✓	✓	✓
• PROFIdrive application class 3	✓	✓	✓
• PROFIdrive application class 4	✓	✓	✓
PROFIBUS DP	✓	✓	✓
• PROFIBUS DP equidistance and isochronous mode	✓	✓	✓
• PROFIBUS DP peer-to-peer communication	✓	✓	✓
EtherNet/IP	–	✓	✓
Modbus TCP	✓	✓	✓
Modbus RTU	–	–	–
AS-Interface	–	–	–
BACnet MS/TP	–	–	–
USS	✓	✓	✓
FLN P1	–	–	–
Web server	✓	✓	✓

© Siemens 2024

Overview

G_D211_XX_00050

PROFINET – the Ethernet standard for automation

PROFINET is the world's leading Industrial Ethernet standard for automation with more than 40 million nodes installed worldwide.

PROFINET makes companies more successful, because it speeds up processes and raises both productivity and plant availability.

Your advantages at a glance

Flexibility	Efficiency	Performance
Tailor-made plant concepts	Optimal use of resources	Increased productivity
Industrial Wireless LAN	One cable for everything	Speed
Safety	Device/network diagnostics	High precision
Flexible topologies	Energy efficiency	Large quantity structures
Open standard	Simple wiring	High transmission rate
Web tools	Fast device replacement	Redundancy
Expandability	Ruggedness/stability	Fast start-up

G_IK10_XX_10304

© Siemens 2024

Overview

Flexibility

Short response times and optimized processes are the basic requirements for competitiveness in global markets because the product lifecycles are becoming shorter and shorter.

PROFINET ensures maximum flexibility in plant structures and production processes, and it enables you to implement innovative machine and plant concepts. For example, mobile devices can also be integrated at locations that are difficult to access.

Flexible topologies

In addition to the linear structure characterized by the established fieldbuses, PROFINET also enables the use of star, tree and ring structures. This is made possible by switching technology via active network components, such as Industrial Ethernet switches and media converters, or by integrating switch functionality into the field devices. This results in increased flexibility in the planning of machines and plants, as well as savings in cabling.

The PROFINET network can be installed without any specialist knowledge at all and meets all requirements that are relevant to the industrial environment. The "PROFINET Installations Guidelines" assist manufacturers and users with network planning, installation and commissioning. Symmetrical copper cables or RFI-resistant fiber-optic cables are used, depending on the application. Devices from different manufacturers are easily connected via standardized and rugged plug-in connectors (up to IP65/IP67 degree of protection).

By integrating switch functionality into the devices, linear topologies can be created that are directly oriented toward an existing machine or plant structure. This reduces cabling overhead and cuts down on components such as external switches.

IWLAN

PROFINET also supports wireless communication with Industrial Wireless LAN, thus opening up new fields of application. For example, technologies subject to wear, such as trailing cables, can be replaced and automated guided vehicle systems and mobile operator panels can be used.

Safety

The PROFIsafe safety profile, which has been tried and tested with PROFIBUS and which permits the transmission of standard and safety-related data on a single bus cable, can also be used with PROFINET. No special network components are necessary for fail-safe communication, which means that standard switches and standard network transitions can continue to be used without any restrictions. In addition, fail-safe communication is equally possible via Industrial Wireless LAN (IWLAN).

Open standard

PROFINET, the open multi-vendor standard (IEC 61158/IEC 61784), is supported by PROFIBUS and PROFINET International (PI). It stands for maximum transparency, open IT communication, network security and simultaneous real-time communication.

Thanks to its openness, PROFINET provides the basis for a standardized automation network in the plant, to which all other machines and devices can be connected. Even the integration of existing plant components, for example using PROFIBUS, presents no problems due to the use of network transitions.

Use of web tools

Thanks to the unrestricted support of TCP/IP, PROFINET permits the use of standard web services such as web servers. Irrespective of the tool used, information from the automation level can be accessed from virtually any location using a commercially available internet browser. This considerably simplifies commissioning and diagnostics. Users can then decide for themselves how much openness to the IT world they want to allow for their machine or plant. This means that PROFINET can be used simply as an isolated plant network or connected via appropriate Security Modules, such as the SCALANCE S modules, to the office network or the internet. In this way, new remote maintenance concepts or the high-speed exchange of production data become possible.

Expandability

On the one hand, PROFINET facilitates the integration of existing systems and networks without any great effort. In this way, PROFINET safeguards investments in existing plant components that communicate via PROFIBUS and other fieldbuses such as AS-Interface. On the other hand, additional PROFINET nodes can be added at any time. By using additional network components, network infrastructures can be expanded using cabling or wireless methods – even while the plant is operating.

© Siemens 2024

Overview

Efficiency

Greater global competition means that companies must use their resources economically and efficiently. This applies in particular to production. This is where PROFINET ensures greater efficiency. Simple engineering guarantees fast commissioning, while reliable devices ensure a high level of plant availability. Comprehensive diagnostic and maintenance concepts help to reduce plant downtimes and keep maintenance costs to a minimum.

One cable for everything

PROFINET permits simultaneous fieldbus communication with isochronous mode and standard IT communication (TCP/IP) on one cable. This real-time communication for the transmission of user/process data and diagnostic data takes place on a single cable. Specific profile communication (PROFIsafe, PROFIdrive and PROFIenergy) can be integrated without any additional cabling. This solution offers a wide scope of functions at a low level of complexity.

Device and network diagnostics

By retaining the tried and tested PROFIBUS device model, the same diagnostics information is available with PROFINET. In addition, module-specific and channel-specific data can also be read out from the devices during device diagnostics, enabling faults to be located quickly and easily. Apart from the availability of device information, the reliability of network operation has top priority in the network management.

In existing networks the Simple Network Management Protocol (SNMP) has established itself as the de facto standard for the maintenance and monitoring of the network components and their functions. PROFINET uses this standard and gives users the opportunity to maintain their networks with tools that are familiar to them, such as the SINEMA Server network management software.

For easier maintenance of PROFINET devices, both on-site and remotely via a secure VPN connection, application-specific websites can be set up on the web server of the field devices using the familiar HTML standard.

Energy efficiency

Moving toward the green factory: PROFIenergy is a profile that provides functions and mechanisms for PROFINET field devices that support energy-efficient production.

The profile, which is defined by the PNO and is independent of any manufacturers or devices, enables energy demand and costs to be significantly reduced: Using PROFIenergy, any specific loads that are not currently being used can be switched off. This achieves a noticeable reduction in energy costs during breaks in production. PROFIenergy permits the simple, automated activation and deactivation of technologically related plant components. It is coordinated centrally by means of a higher-level controller and is networked via PROFINET. This ensures that as much energy as possible is saved during long breaks. Temporarily switching off plant components contributes to the even distribution and most efficient use of energy.

The use of PROFIenergy is made easy for the machine builder by its integration into familiar series of products. In addition, PROFIenergy is defined in such a way that the necessary function blocks can easily be integrated into existing automation systems at a later stage.

Simple wiring

Particularly stringent demands are made on the installation of cables in the industrial environment. In addition, there is a requirement to set up industry-standard networks in the shortest possible time without any special knowledge.

With FastConnect, Siemens offers a high-speed installation system that meets all of these requirements. FastConnect is the standard-compliant, industry-standard cabling system consisting of cables, connectors and assembly tools for PROFINET networks. The time required for connecting terminals is minimized by the simple installation method using just a single tool, while installation errors are prevented by the practical color-coding. Both copper cables and glass fiber optic cables can be easily assembled on site in this way.

Fast device replacement

PROFINET devices are identified by means of a name assigned during configuration. When replacing a defective device, a new device can be recognized from its topology information by the IO controller and a new name can be assigned to it automatically. This means that no engineering tool is necessary for the replacement of equipment.

This mechanism can even be used for the initial commissioning of a complete system. This speeds up commissioning, particularly in the case of series machines.

Ruggedness

An automation network must be able to withstand most external sources of interference. The use of Switched Ethernet prevents faults in one section of the network from affecting the entire plant network. For areas that are particularly prone to radio frequency interference (RFI), PROFINET allows the use of fiber optic cables.

© Siemens 2024

Overview

Performance

Productivity and product quality determine the level of success in the market. Precise motion control, dynamic drives, high-speed controllers and the deterministic synchronization of devices are therefore key factors in achieving superior production. They facilitate high production rates and optimum product quality at the same time.

Speed and precision

Fast motion control applications demand precise and deterministic exchange of data. This is implemented by means of drive controllers using isochronous real time (IRT).

With IRT and isochronous mode, PROFINET permits fast and deterministic communication. This synchronizes the various cycles of a system (input, network, CPU processing and output), even in the case of parallel TCP/IP traffic. The short cycle times of PROFINET make it possible to raise the productivity of machines and plants and to guarantee the product quality and high level of precision.

The standardized PROFIdrive profile permits vendor-independent communication between CPUs and drives.

Large quantity structures

The use of PROFINET makes it possible to overcome the existing restrictions regarding the scope of machines and systems that can be implemented. In one network, several different controllers can interact with their assigned field devices. The number of field devices per PROFINET network is virtually unlimited – the entire range of IP addresses is available.

High data rate

By using 100 Mbit/s in full duplex mode, PROFINET achieves a significantly higher data rate than previous fieldbuses. This means that other plant data can be transmitted over TCP/IP without any problems, in addition to the process data. PROFINET therefore meets the combined industrial demands for simultaneously transmitting high-speed IO data and large volumes of data for additional sections of the application. Even the transmission of large volumes of data, such as that from cameras, has no adverse effect on the speed and precision of the IO data transmission, thanks to PROFINET mechanisms.

Media redundancy

A higher plant availability can be achieved with a redundant installation (ring topology). The media redundancy can be implemented not only with the aid of external switches, but also by means of integrated PROFINET interfaces. Using the media redundancy protocol (MRP), reconfiguration times of 200 ms can be achieved. If the communication is interrupted in just one part of the ring installation this means that a plant standstill is prevented and any necessary maintenance or repair work can be performed without any time pressure.

For motion control applications, PROFINET with IRT in ring topologies offers extended media redundancy for planned duplication (MRPD) which operates in a bumpless mode without any reconfiguration time. If communication is interrupted (e.g. a cable break) the process can continue operating without interruption.

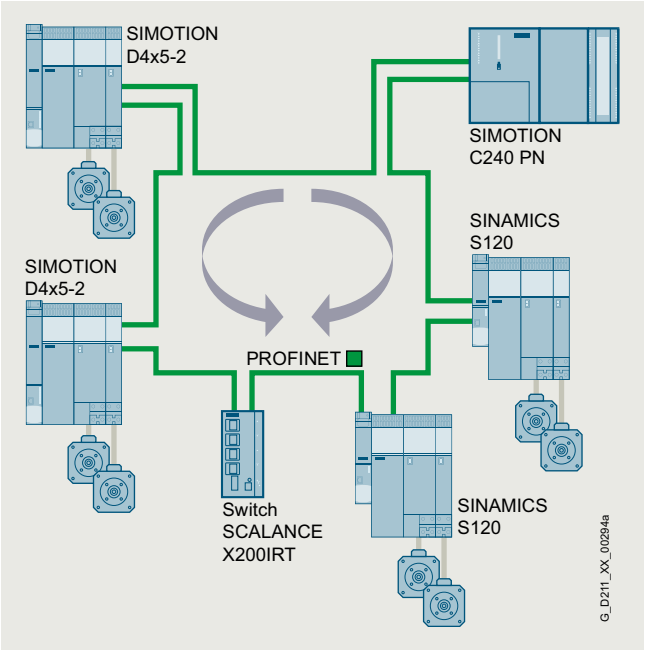

Bumpless media redundancy illustrated by example of SINAMICS S120 with SIMOTION and SCALANCE X200IRT

© Siemens 2024

Benefits

- PROFINET is the open Industrial Ethernet standard for automation
- PROFINET is based on Industrial Ethernet
- PROFINET uses TCP/IP and IT standards
- PROFINET is real-time Ethernet
- PROFINET enables seamless integration of fieldbus systems
- PROFINET supports fail-safe communication via PROFIsafe and also via IWLAN

Integration

PROFINET – Functions of the SINAMICS S120/ SINAMICS S150 Control Units

SINAMICS S120/ SINAMICS S150	CU320-2 PN	CU320-2 DP (CBE20)	CU310-2 PN
PROFINET with IRT (isochronous mode)	✓	✓	✓
Number of ports	2	4	2
Min. send clock in ms	0.25	0.5	0.25
Shared Device	✓	✓	✓
Bumpless media redundancy (MRPD)	✓	✓	✓
Step-change media redundancy (MRP)	✓	✓	✓
System redundancy S2	✓	–	✓
PROFIsafe	✓	✓	✓
PROFIenergy	✓	✓	✓
PROFIdrive	✓	✓	✓

System redundancy

SINAMICS S120 supports the PROFINET function "system redundancy":

SINAMICS S120 can now be connected to high-availability systems such as SIMATIC S7-400H with two controllers. No additional hardware is required to make the connection. Complex automation tasks in the process industry, in particular, where plant availability and redundancy of the control system are essential, require reliable communication with a high-availability system. Both controllers of the high-availability system always have access to the SINAMICS S120.

In the event of a cable break or failure of a CPU, the other controller takes over, thus ensuring uninterrupted communication.

More information

More information is available on the internet at:
www.siemens.com/profinet

© Siemens 2024

Overview

PROFIdrive – the standardized drive interface for PROFINET and PROFIBUS

PROFIdrive defines the device behavior and technique to access internal device data for electric drives connected to PROFINET and PROFIBUS – from basic frequency converters up to high-performance servo controllers.

It describes in detail the practical use of communication functions – device-to-device communication, equidistance and clock cycle synchronization (isochronous mode) in drive applications. In addition, it specifies all device characteristics which influence interfaces connected to a controller over PROFINET or PROFIBUS. This also includes the state machine (sequence control), the encoder interface, scaling of values, definition of standard telegrams, access to drive parameters, etc.

The PROFIdrive profile supports both central as well as distributed motion control concepts.

What are profiles?

For devices and systems used in automation technology, profiles define properties and modes of behavior. This allows manufacturers and users to define common standards. Devices and systems that comply with such a cross-manufacturer profile, are interoperable on a fieldbus and, to a certain degree, can be interchanged.

Are there different types of profiles?

A distinction is made between what are known as application profiles (general or specific) and system profiles:

- Application profiles (also device profiles) predominantly refer to devices (e.g. drives) and include an agreed selection regarding bus communication as well as specific device applications.
- System profiles describe classes of systems, including master functionality, program interfaces and integration resources.

Is PROFIdrive fit for the future?

PROFIdrive has been specified by the PROFIBUS and PROFINET International (PI) user organization, and is specified as a standard that is fit for the future through standard IEC 61800-7.

The basic philosophy: Keep it simple

The PROFIdrive profile tries to keep the drive interface as simple as possible and free from technology functions. As a result, referencing models as well as the functionality and performance of the PROFINET/PROFIBUS master have either no or only little influence on the drive interface.

One drive profile – different application classes

The integration of drives into automation solutions depends very strongly on the particular drive application. In order to be able to address the complete, huge bandwidth of drive applications – from basic frequency converters up to synchronized multi-axis systems with a high dynamic performance – using just one profile, PROFIdrive defines six application classes, to which most drive applications can be assigned:

- Class 1 – standard drives (pumps, fans, agitators, etc.)
- Class 2 – standard drives with technological functions
- Class 3 – positioning drives
- Class 4 – motion control drives with central, higher-level motion control intelligence and the patented "Dynamic Servo Control" positioning concept
- Class 5 – motion control drives with central, higher-level motion control intelligence and position setpoint interface
- Class 6 – motion control drives with distributed motion control intelligence integrated in the drives

Design

The device model of PROFIdrive

PROFIdrive defines a device model comprising function modules, which interoperate inside the device and which reflect the intelligence of the drive system. These modules have objects assigned to them which are described in the profile and are defined with respect to their functions. The overall functionality of a drive is therefore described through the sum of its parameters.

In contrast to other drive profiles, PROFIdrive defines only the access mechanisms to the parameters as well as a subset of profile parameters (approx. 30) such as the fault buffer, drive control and device identification.

All other parameters are vendor-specific which gives drive manufacturers great flexibility with respect to implementing control functions. The elements of a parameter are accessed acyclically over data records.

As a communication protocol, PROFIdrive uses DP-V0, DP-V1, and the DP-V2 expansions for PROFIBUS including the functions "Device-to-Device Communication" and "Isochronous Operation", or PROFINET IO with real-time classes RT and IRT.

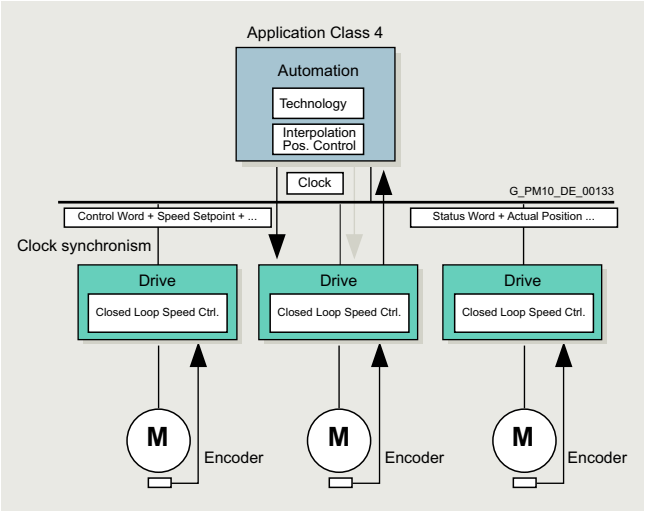

More information

More information on PROFINET and PROFIBUS is available at: www.profibus.com

© Siemens 2024

Overview

PROFIBUS – the proven, rugged bus system for automation engineering applications

The requirements of users for an open, non-proprietary communication system have resulted in the specification and standardization of the PROFIBUS protocol.

PROFIBUS defines the technical and functional features of a serial fieldbus system, with which the distributed field automation devices in the lower area (sensor/actuator level) can be networked up to the mid performance range (cell level).

Standardization according to IEC 61158/EN 50170 secures your investments for the future.

Using the conformity and interoperability test performed by the test laboratories authorized by PROFIBUS & PROFINET International (PI) and the certification of the devices by PI, users have the security of knowing that the quality and functionality is guaranteed, even in multi-vendor installations.

PROFIBUS versions

Two different PROFIBUS versions have been defined in order to comply with the widely varying requirements at field level:

- PROFIBUS PA (Process Automation) – the version for applications in process automation. PROFIBUS PA uses the intrinsically safe transmission technology specified in IEC 61158-2.
- PROFIBUS DP (Distributed Periphery) – this version, which is optimized for speed, is specifically tailored to the communication of automation systems with distributed I/O stations and drives. PROFIBUS DP sets itself apart as a result of very short response times and high noise immunity, and replaces cost-intensive, parallel signal transfer with 24 V and measured value transfer utilizing 0/4 … 20 mA technology.

Design

Bus participants on PROFIBUS DP

PROFIBUS DP makes a distinction between two different master classes and one device class:

DP master class 1

For PROFIBUS DP, DP master class 1 is the central component. In a defined and continually repeating message cycle the central master station exchanges information with distributed stations (DP devices).

DP master class 2

Devices of this type (programming, configuring or operator control devices) are used during commissioning, for configuring the DP system, for diagnostics or for operating the active plant or system. A DP master class 2 can, for example, read input, output, diagnostic and configuration data of the devices.

DP device

A DP device is an I/O device which receives output information or setpoints from the DP master, and as response, returns input information, measured values and actual values to the DP master. A DP device never sends data automatically, but only when requested by the DP master.

The quantity of input and output information depends on the device, and for each DP device in each send direction can be a maximum of 244 bytes.

Function

Functional scope in DP masters and DP devices

The functional scope can differ between DP masters and DP devices. The different functional scopes are classified as DP-V0, DP-V1 and DP-V2.

DP-V0 communication functions

The DP-V0 master functions consist of "Configuration", "Parameter Assignment" and "Reading Diagnostics Data", as well as cyclic reading of input data/actual values and writing output data/setpoints.

DP-V1 communication functions

The DP-V1 function expansions make it possible to perform acyclic read and write functions as well as processing cyclic data communication. This type of device must be supplied with extensive parameterization data during start-up and during normal operation. These acyclically transferred parameterization data are only rarely changed in comparison to the cyclic setpoints, actual values, and measured values, and are transferred at lower priority in parallel with the cyclic high-speed user data transfer. Detailed diagnostic information can be transferred in the same way.

DP-V2 communication functions

The extended DP-V2 master functions mainly comprise functions for isochronous operation and device-to-device communication between DP devices.

- Isochronous mode:
  Isochronous mode is implemented by means of an equidistant signal in the bus system. This cyclic, equidistant cycle is sent by the DP master to all bus nodes in the form of a Global Control Telegram. Master and devices can then synchronize their applications with this signal. The signal jitter between cycles is less than 1 µs.
- Device-to-device communication:
  The "publisher/subscriber" model is used to implement device-to-device communication. Devices declared as publishers make their input data/actual values and measured values available to other devices, the subscribers, for reading. This is performed by sending the response frame to the master as a broadcast. Device-to-device communication is therefore a cyclic process.

Integration

PROFIBUS with SINAMICS

SINAMICS uses the PROFIBUS DP protocol.
SINAMICS drives can only be used as DP devices.

© Siemens 2024

Overview

Ethernet is the basic internet technology for worldwide networking. The many possibilities of intranet and internet, which have been available for office applications for a long time, are now utilized for production automation with Industrial Ethernet.

Apart from the use of information technology, the deployment of distributed automation systems is also on the increase. This entails breaking up complex control tasks into smaller, manageable and drive-based control systems. This increases the demand for communication and consequently a comprehensive and powerful communication system.

Industrial Ethernet provides a powerful area and cell network for the industrial field, compliant with the IEEE 802.3 (ETHERNET) standard.

Benefits

Ethernet enables a very fast data transfer (10/100 Mbit/s, 1/10 Gbit/s) and at the same time has full-duplex capability. It therefore provides an ideal basis for communication tasks in the industrial field. With a share of over 90 %, Ethernet is the number one network worldwide and offers important features which have essential advantages:

- Fast commissioning thanks to the simplest connection method
- High availability since existing networks can be extended without any adverse effects
- Almost unlimited communication performance because scalable performance is available through switching technology and high data rates when required
- Networking of different application areas such as office and production areas
- Company-wide communication based on WAN (Wide Area Network) technology or the internet
- Investment protection due to continuous compatibility with further developments
- Wireless communication using Industrial Wireless LAN

In order to make Ethernet suitable for industrial applications, considerable expansions with respect to functionality and design are required:

- Network components for use in harsh industrial environments
- Fast assembly of the RJ45 connectors
- Fail-safety through redundancy
- Expanded diagnostics and message concept
- Use of future-oriented network components (e.g. switches)

SIMATIC NET offers corresponding network components and products.

Integration

Industrial Ethernet with SINAMICS

SINAMICS provides Control Units and Communication Boards with PROFINET interface based on 100 Mbit/s Ethernet. This means that process communication in real-time, as well as engineering and HMI via standard TCP/IP are simultaneously possible.

It is also possible to access the web server in SINAMICS at the same time that process communication is in progress.

The CU310-2 and CU320-2 Control Units have an additional Ethernet interface at the front so that service and engineering tasks can be performed very easily.

Communication with SINAMICS over Industrial Ethernet

PG/PC/HMI communication

PG/PC/HMI communication is performed using protocols which are based on the basic TCP/IP protocol.

- Engineering and diagnostics with STARTER

IT communication

IT communication is performed using protocols which are based on the basic TCP/IP protocol. The most important IT protocols are:

- HTTP/HTTPS: Hypertext Transfer Protocol (Secure)
  Using a standard internet browser, it is possible to retrieve predefined web pages containing diagnostic information from the device. Furthermore, user-defined web pages containing information defined by the user can be stored in the device.
- SNMP: Simple Network Management Protocol

© Siemens 2024

Communication > EtherNet/IP

Overview

Ethernet Industrial Protocol (EtherNet/IP) is an open standard for industrial networks. EtherNet/IP is used to transmit cyclic I/O data and acyclic parameter data. EtherNet/IP was developed by the ODVA (Open DeviceNet Vendor Association) and belongs to the international standard series IEC 61158.

Communication > Modbus TCP

Overview

The Ethernet protocol Modbus TCP is an open standard for industrial networks. Modbus TCP is used to transmit acyclic register data. Modbus TCP has been standardized in the international series of standards IEC 61158 since 2007.

Communication > USS

Overview

As a simple fieldbus protocol, USS (**U**niversal **S**erial **I**nterface protocol of Siemens AG, 1992) can be used both cyclically and acyclically. Based on RS485 physical bus characteristics, up to 32 nodes can be networked to one bus segment and connected to a higher-level controller. This protocol is generally used when there are limited demands on data throughput.

© Siemens 2024

Overview

Function module basic positioner EPOS

The basic positioner EPOS is available as a standard technology function for the following SINAMICS Control Units and can be called as a function module that can be activated additionally.

- SINAMICS S120 CU310-2 and CU320-2 Control Units
- SINAMICS S110 CU305 Control Units
- SINAMICS G120 CU250S-2 Control Units
- SINAMICS G120D CU250D-2 Control Units

The basic positioner can be used to resolve basic motion control tasks without additional external technological outlay from the drive itself.

Integrated functionality for absolute and relative positioning of linear and rotary axes with motor encoders or machine encoders.

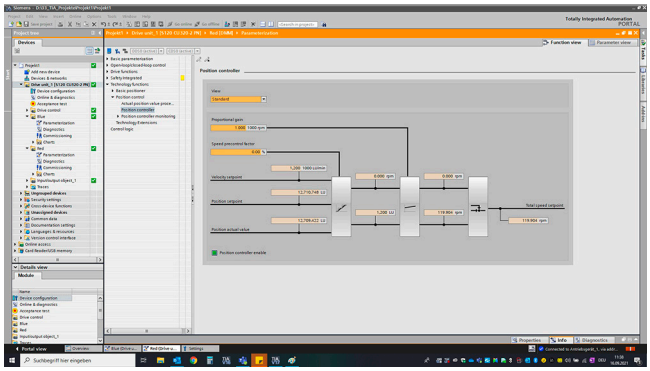

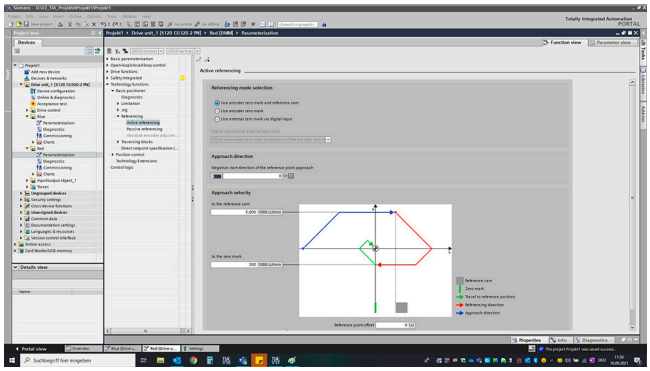

The EPOS basic positioner in the SINAMICS drive system provides powerful and precise positioning functions. Due to its flexibility and adaptability, the basic positioner can be used for a wide range of positioning tasks.

The functions are easy to handle both during commissioning and during operation, and the comprehensive monitoring functions are outstanding.

Many applications can be carried out without external position controllers.

The EPOS basic positioner is used to position linear and rotary axes (modulo) in absolute/relative terms with rotary as well as linear motor encoder or machine encoder (indirect or direct measuring system).

EPOS is a function module that can be activated additionally in Servo Control and in Vector Control.

User-friendly configuring and commissioning, including control panel (operation using PC) and diagnostics, are possible with the STARTER and SINAMICS Startdrive commissioning tools.

In addition to extremely flexible positioning functions, EPOS offers a high degree of user-friendliness and reliability thanks to integral monitoring and compensation functions.

Different operating modes and their functionality increase flexibility and plant productivity, for example, by means of "on-the-fly" and bumpless correction of the motion control.

Preconfigured PROFIdrive positioning frames are available which, when selected, automatically establish the internal "connection" to the basic positioner.

© Siemens 2024

Overview

Functionality of the EPOS basic positioner

Lower-level closed-loop position control with the following essential components

- Position actual value sensing (including the lower-level measuring probe evaluation and reference mark search)
- Position controller (including limits, adaptation and pre-control calculation)
- Monitoring functions (standstill, positioning and dynamic following error monitoring, cam signals)

Mechanical system

- Backlash compensation
- Modulo offset

Limitations

- Speed/acceleration/delay/jerk limitation
- Software limit switches (traversing range limitation by means of position setpoint evaluation)
- Stop cams (traversing range limitation using hardware limit switch evaluation)

Referencing or adjustment

- Set reference point (for an axis at standstill)
- Search for reference (separate mode including reversing cam functionality, automatic reversal of direction, homing to "output cam and encoder zero mark" or only "encoder zero mark" or "external zero mark (BERO)")
- Flying referencing (seamless referencing possible during "normal" traversing with the aid of the measuring input evaluation; generally evaluation, e.g. of a BERO. Subordinate function for the modes "jog", "direct setpoint input/MDI" and "traversing blocks")
- Absolute encoder alignment

Traversing block mode

- 64 traversing blocks for
  - SINAMICS S120 CU310-2 and CU320-2 Control Units
- 16 traversing blocks for
  - SINAMICS S110 CU305 Control Units
  - SINAMICS G120 CU250S-2 Control Units
  - SINAMICS G120D CU250D-2 Control Units
- Positioning using traversing blocks that can be stored in the drive unit including continuation conditions and specific jobs for a previously homed axis
- Configuring traversing blocks using the traversing block editor in the relevant commissioning tool of the SINAMICS converter family
- A traversing block contains the following information:
  - Job number and job (e.g. positioning, waiting, GOTO block jump, setting of binary outputs, travel to fixed stop)
  - Motion parameters (target position, velocity, override for acceleration and deceleration)
  - Mode (e.g.: hide block, continuation conditions such as "Continue_with_stop", "Continue_flying" and "Continue_externally using high-speed measuring inputs")
  - Job parameters (e.g. wait time, block step conditions)

Direct setpoint specification (MDI) mode

- Positioning (absolute, relative) and setting-up (endless closed-loop position control) using direct setpoint inputs (e.g. via the PLC using process data)
- It is always possible to influence the motion parameters during traversing (on-the-fly setpoint acceptance) as well as for on-the-fly changes between the setup and positioning modes.
- The direct setpoint specification mode (MDI) can also be used in the relative positioning or setup mode if the axis is not referenced. This means that on-the-fly synchronization and re-referencing can be carried out using "flying referencing".

Jog mode

- Closed-loop position controlled traversing of the axis with "endless position controlled" or "jog incremental" modes (traverse through a "step width"), which can be toggled between

© Siemens 2024

Overview

The SINAMICS Technology Extensions are configurable functions or Siemens technologies that can be added onto firmware functions. The extensions are designed to allow implementation of highly complex, targeted application-specific tasks for various sectors such as test stands, storage and retrieval machines, transportation systems based on linear motors or multi-winding motors in machine manufacture.

The SINAMICS Technology Extensions are part of the Advanced Technology Function and are added to the existing firmware as self-contained software packages. They are easy to install using the SINAMICS Startdrive and STARTER commissioning tools and expand the existing device functionality by the application-specific functions contained in the software. The software is parameterized and diagnosed using SINAMICS Startdrive and STARTER.

Installing these extended functions customizes the functionality of the SINAMICS S120 converter so that it meets the specific requirements of the user.

SINAMICS Technology Extensions can be used for the following drive systems (the way in which they are used depends on the individual Technology Extension):

- SINAMICS G130
- SINAMICS G150
- SINAMICS S120
- SINAMICS S150
- SINAMICS DCM
- SINAMICS DCP
- SINAMICS GM150
- SINAMICS SM150
- SINAMICS SM120CM
- SINAMICS GL150
- SINAMICS SL150
- SINAMICS GH150
- SIMOTION D (SINAMICS Integrated)
- SIMATIC Drive Controller (SINAMICS Integrated)
- SINUMERIK 840D sl (SINAMICS Integrated)
- SINUMERIK 828D (SINAMICS Integrated)
- SINUMERIK ONE (SINAMICS Integrated)

The following SINAMICS Technology Extensions are available to download
https://support.industry.siemens.com

Simply enter your Article No. in "Search for product information".

Coupling of SERVO Motor Modules with SINAMICS Technology Extension SERVCOUP

The Technology Extension SERVCOUP (Servo Coupling) is an extension for the SERVO drive object of SINAMICS.
In the SERVO control mode, SERVCOUP allows motors to be operated, which as a result of their size and/or design format, cannot be operated from a single SINAMICS S120 power unit.
These motors are subdivided into several drive objects, each of which can be operated on a Motor Module, and can be coupled with one another. As a consequence, the individual drive objects can be considered as partial motors with their own winding and terminals.

Irrespective of the number of coupled drive objects, only one encoder is required for the operation of the motor because Technology Extension SERVCOUP implements a digital encoder splitter in the Control Unit. In this way, the actual encoder values together with the setpoint specifications are passed on to all encoderless drive objects.

SERVCOUP is generally released for the following SIMOTICS motors:

- 1FE2 (built-in spindle motor) as a built-in spindle drive for machine tools
- 1FN3 (linear motor) as milling centers with large rotary tables for machine tools or portal applications with linear motors
- 1FW4 (torque motor) for servo presses and test stands for high performances with superior dynamics
- 1FW6 (torque motor) for servo presses
- 1FW68 (segment motor) in milling centers with large rotary tables for machine tools

Fundamentally, operation is possible with the following motors:

- Segment motors (axial and radial)
- Direct drives (linear and rotary)
- Double and multi-winding motors (induction and synchronous)

Peak load management of the spindle for overload protection of the infeed of machine tools with SINAMICS Technology Extension DYNEGMA

The SINAMICS Technology Extension DYNEGMA (Dynamic Energy Management) from the Advanced Technology Functions is an extension for the infeed and SERVO drive objects of SINAMICS. The SINAMICS Technology Extensions are also known by the name SINAMICS Open Architecture.
The Technology Extension DYNEGMA is a peak load management and overload protection function for machine tool infeeds. The task of DYNEGMA is to protect the infeed unit during power peaks; these can occur when several drives/spindles simultaneously accelerate or brake, e.g. during tool change. DYNEGMA only intervenes when actually required in order to guarantee not only safe and reliable operation, but also maximum dynamic performance. To protect the infeed unit against overload, and in turn resulting machine downtimes or tool, material, or machine damage, when required DYNEGMA also limits the torque of individual spindles/drives.

For example, the following applications can be used with DYNEGMA:

- Overload protection of the infeed and peak load management of spindles for milling and turning machines, even during a forced EMERGENCY STOP
- Dynamic tool change for optimal utilization of the maximum infeed power of machine tools

© Siemens 2024

Overview

Vibration extinction for storage and retrieval machines with SINAMICS Technology Extension VIBX

The Technology Extension VIBX (Vibration Extinction) is an extension of the SINAMICS drive objects SERVO and VECTOR. A setpoint filter is implemented in VIBX. The objective of the setpoint filter is to change the setpoint of an axis so that there is as little vibration as possible caused in the natural frequency range of the moving mechanical components. This function is primarily deployed on storage and retrieval machines to significantly reduce mast vibrations caused by acceleration and braking. It has been demonstrated that reducing the mast vibrations will allow the mast to come to a standstill more quickly and so enable it to handle goods faster.

The SINAMICS Technology Extension Vibration Extinction implemented as setpoint filter can be used both in basic positioners (EPOS) and Dynamic Servo Controls (DSC) together with a controller in the drive. For this purpose, two modes of application are supported by the Technology Extension:

- EPOS and LR application mode
- DSC application mode

The filter characteristics can be set using frequency and damping (attenuation). The filter frequency can be linearly changed between two limit values via an input during operation. This means that the filter frequency can be tracked to follow the changing natural frequency of a mechanical system (e.g. as a result of different load states) (online frequency change).

The following applications can be implemented with VIBX:

- Sway control for storage and retrieval unit
- Vibration extinction of positioning applications with mechanical natural oscillations

Engineered DC-DC Converters with Standard Motor Modules with SINAMICS Technology Extension DCDCCONV

The SINAMICS Technology Extension DCDCCONV (DC-DC Converter) is an extension for the booksize and chassis formats of SINAMICS S120.
Using Technology Extension DCDCCONV, you can use the booksize or chassis design formats of the Motor Module - which normally control a 3-phase motor - as an engineered DC/DC converter. Additional components (e.g. energy storage reactor or smoothing capacitor) must be connected downstream from the Motor Module.

The following applications can be implemented with DCDCCONV:

- Integration of capacitors (Ultracapacitor Modules or electrolytic capacitors) as energy storage devices for the following applications:
  - Reduction of electrical connected power
  - Mains buffering
  - Storage for regenerated energy
- Integration of battery modules as energy storage devices for the following applications:
  - Reduction of electrical connected power
  - Mains buffering
  - Storage for regenerated energy
  - Provision of an island grid
  - Loading of connected battery modules with defined test cycles
- Supply of an electrolyzer for hydrogen production
  - Here, the DC-DC converter serves as the energy source for an electrolyzer to produce hydrogen.
- Supply of inverters:
  - Supply of a connected inverter with defined voltage level
  - Test stand for the complete vehicle drive system

In addition to the Function Manual for the SINAMICS Technology Extension DCDCCONV software, there are also application descriptions for the released applications available. The application descriptions include information on configuring an **engineered DC-DC converter** with the core element SINAMICS S120 Motor Module in conjunction with the DCDCCONV software in the respective applications. This application description should be observed in order to be able to reliably and safely configure the application.

The application description for DCDCCONV

- with capacitors is available at:
  https://support.industry.siemens.com/cs/document/109748701
- with battery modules is available at:
  https://support.industry.siemens.com/cs/document/109751796
- to supply an electrolyzer is available at:
  https://support.industry.siemens.com/cs/document/109813658
- to supply inverters is available at:
  https://support.industry.siemens.com/cs/document/109771893

Signal generator for test stands with SINAMICS Technology Extension POLYGON

The Technology Extension POLYGON (Polygonal Line) is an extension of the SINAMICS drive objects SERVO, VECTOR and HLA.
The polygonal line application makes it possible to create a master-value-dependent output signal based on a parameterized characteristic in the current controller sampling time (or an integer multiple of the current controller sampling time). The characteristic is defined by up to 10000 equidistantly distributed interpolation points between which linear interpolation is performed. The y values of the interpolation points can be taken from an Excel sheet using a script. By interconnecting the output signals to different connector inputs, it is possible to create various relationships via the characteristic functionality, e.g.:

- Position-position reference
- Position-speed reference
- Position-torque reference

Fast signal evaluation and processing with Technology Extension SIVALU (Signal Evaluation)

The SIVALU Technology Extension allows signals to be evaluated in the current controller sampling time of a drive object. Minimum value, maximum value, and mean value can be obtained, as well as arithmetic and logical evaluations executed. Evaluations are calculated in ascending order of indexes and can therefore be cascaded. In addition, additional fixed values for BICO interconnections are freely available.

The following applications can be implemented with SIVALU, for example:

- Applications with fast signal processing of logical and arithmetic functions, as well as conversions of signals up to the current controller cycle
- Logical and arithmetic functions for SINUMERIK ONE and SINUMERIK 840D sl in the drive
- Calculation of process torque using an arithmetic function

© Siemens 2024

Overview

Control of the Heat Exchanger Module for the dissipation of power loss of the converter with HEM Technology Extension (Heat Exchanger Module)

The HEM Technology Extension enables the control of the Heat Exchanger Module hardware and handles the following tasks:

- The Heat Exchanger Module is set up for the specific system using parameters
- Controlling the pumps
- Monitoring the motor circuit breaker, the pressure actual values and the temperature actual values
- Detecting leaks
- Controlling the intake temperature in the de-ionized water circuit using a control valve
- Displaying all system parameters
- Functionalities to avoid condensation

Quick recording of drive data together with Drive Connector SINAMICS and the Technology Extension TRCDATA (Trace Data)

The Technology Extension TRCDATA is necessary for the use of the Drive Connector SINAMICS with the High Speed adapter function (HS Adapter).
Together with the High Speed adapter (HS Adapter) in the Drive Connector SINAMICS, it is possible to continuously record drive data up to 8 kHz and provide the data to the Industrial Edge data bus.
The maximum sampling frequency of 8 kHz is dependent on the network and drive configuration.

Other properties of the Technology Extension TRCDATA in connection with the Drive Connector SINAMICS are available at: https://sieportal.siemens.com/su/bjTFD

Point-to-point connection between two CUs with SINAMICS Technology Extension OALINK

The Technology Extension OALINK (Open Application Link) is a SINAMICS extension for the CU320-2 Control Unit.
The OALINK enables bidirectional communication between two Control Units based on DRIVE-CLiQ to facilitate the simple exchange of data. In this way, an additional Control Unit can be integrated as a technology extension for extensive drive-based technology with SINAMICS Drive Control Chart (DCC).

The following applications can be implemented with OALINK:

- Technology extension for the SINAMICS S120 (CU320-2 as replacement for the SIMATIC T400 technology module).
- Technology extension for the SINAMICS DCM (CU320-2 as replacement for the SIMATIC T400 technology module).
- Load distribution of physically coupled drives (leading/follower drive).
- General couplings between SINAMICS DCM and SINAMICS S120.
- General couplings between SINAMICS DCP and SINAMICS S120.
- General couplings between SINAMICS DCM and SINAMICS MV

Fast fault reaction of coupled axes with SINAMICS Technology Extension FASTBRK

The SINAMICS Technology Extension FASTBRK (Fast Brake Reaction for Coupled Axes) is a SINAMICS extension for SERVO drive objects.

Technology Extension FASTBRK is used on machines with coupled axes, such as gantry axes.
Previously, in cases of a drive-autonomous fault, braking was only applied to the affected axis. The coupled axes were only braked after the set gantry switch-off limit of the synchronism difference was exceeded, for example.
The FASTBRK Technology Extension on the other hand propagates the original fault reaction to the coupled axes. This means that in the event of a fault such as an encoder failure on a drive axis, the same fault reaction (e.g. encoderless braking) is initiated as quickly as possible on all mechanically coupled axes. In this way, the Technology Extension FASTBRK enables coupled drive objects to simultaneously and evenly brake to a standstill, thus minimizing the risk of damage to the machine.

The following applications can be implemented with FASTBRK:

- Fast fault reaction in the drive for SINUMERIK axis couplings, such as gantry and master/device axes.
- Propagation of the axis fault possible with a minimum reaction time from the current controller cycle (e.g. 125 µs)
- Grouping of up to three groups per Control Unit / NCU / NX

© Siemens 2024

Selection and ordering data

Description	Article No.
SINAMICS Technology Extensions **Runtime license per performance unit (of a Control Unit)** **All software products can be downloaded free of charge**	
SINAMICS Technology Extension SERVCOUP Usable from SINAMICS firmware V4.5 HF21 • CoL in electronic form	**6SL3077-0AA00-8AH0**
SINAMICS Technology Extension DYNEGMA Usable from SINAMICS firmware V4.7 • CoL in electronic form	**6SL3077-0AA03-0AH0**
SINAMICS Technology Extension VIBX Usable from SINAMICS firmware V4.4 • CoL in electronic form	**6SL3077-0AA00-5AH0**
SINAMICS Technology Extension HEM Usable from SINAMICS firmware V5.1 Included in SINAMICS S120 Cabinet Modules, Heat Exchanger Modules. • CoL in electronic form	**6SL3077-0AA05-2AH0**
SINAMICS Technology Extension POLYGON Usable from SINAMICS firmware V4.5 • CoL in electronic form	**6SL3077-0AA00-7AH0**
SINAMICS Technology Extension OALINK Usable from SINAMICS firmware V4.6 HF5 • CoL in electronic form	**6SL3077-0AA01-0AH0**
SINAMICS Technology Extension SIVALU Usable from SINAMICS firmware V5.2 • CoL in electronic form	**6SL3077-0AA01-4AH0**
SINAMICS Technology Extension FASTBRK Usable from SINAMICS firmware V4.5 • CoL in electronic form	**6SL3077-0AA01-7AH0**
SINAMICS Technology Extension DCDCCONV Usable from SINAMICS firmware V5.2 SP3 with DCDCCONV V2.1 or from SINAMICS firmware V4.8 HF4 with DCDCCONV V1.3 SP1 • CoL in electronic form	**6SL3077-0AA02-0AH0**
SINAMICS Technology Extension TRCDATA Usable from SINAMICS firmware V4.6 • CoL in electronic form	**6SL3077-0AA02-1AH0**

More information

Further SINAMICS Technology Extensions are available for the following applications:

- Signal generator or operating profiles for test stands with Technology Extension **SETPGEN** (Setpoint Generator)
- Specification of current setpoint and transformation angle with Technology Extension **EXLOOP** (External Loop Controller)
- Rotation detection to determine the speed with Technology Extension **ROTDTEC** (Rotation Detection)
- Detection of chatter during the machining process with Technology Extension **CHATDTEC** (Chatter Detection)
- Coupling of linear motors for transportation systems with Technology Extension **RAILCTRL** (Rail Control), see Multi-Carrier-System at: https://support.industry.siemens.com/cs/document/109784038

More information about SINAMICS Technology Extensions is available on the internet at
www.siemens.com/sinamics-firmware
(Section: Advanced Technology Functions)

© Siemens 2024

Notizen

© Siemens 2024

SINAMICS S120 Chassis Format Converter Units

3

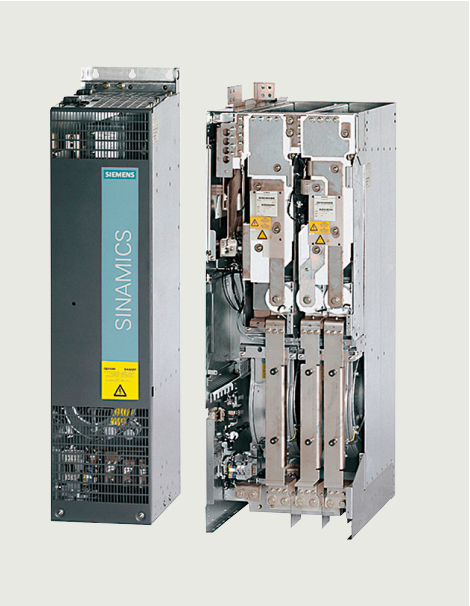

3/2 System overview
3/2 Overview
3/4 Function
3/6 Technical specifications

3/7 Air-cooled units
3/7 Technical specifications
3/9 Characteristic curves
3/12 Power Modules
3/16 Basic Line Modules
3/22 Smart Line Modules
3/27 Active Line Modules
3/33 Active Interface Modules
3/39 Motor Modules
3/56 Mounting device for power blocks

3/57 Liquid-cooled units
3/57 Overview
3/58 Technical specifications
3/62 Characteristic curves
3/67 Power Modules
3/71 Basic Line Modules
3/75 Active Line Modules
3/79 Active Interface Modules
3/84 Motor Modules
3/94 Mounting device for liquid-cooled power units

© Siemens 2024

Overview

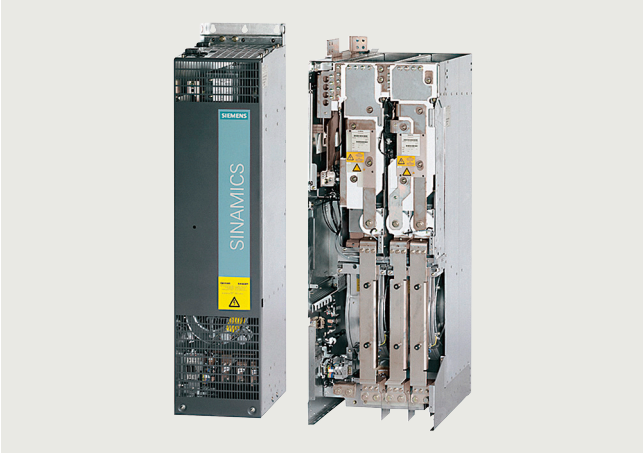

With its separate power unit and Control Unit, the SINAMICS S120 drive system can be perfectly adapted to a wide variety of different drive tasks.

The Control Unit is selected according to the number of drives to be controlled and the required performance level, while the power unit must be rated to meet requirements regarding regenerative feedback capability or energy exchange. The connection between the Control Unit and power unit is made very simply using the DRIVE-CLiQ digital system interface.

The following units are available in chassis format:

- Power Modules
- Basic Line Modules
- Smart Line Modules (only available in the air-cooled version)
- Active Line Modules
- Active Interface Modules
- Motor Modules

Power Modules

The simplest version of a SINAMICS S120 drive system comprises a CU310-2 Control Unit and a Power Module.

In Power Modules specifically designed for single drives without regenerative feedback into the line supply, the line-side infeed and the motor-side power unit are combined in one unit.

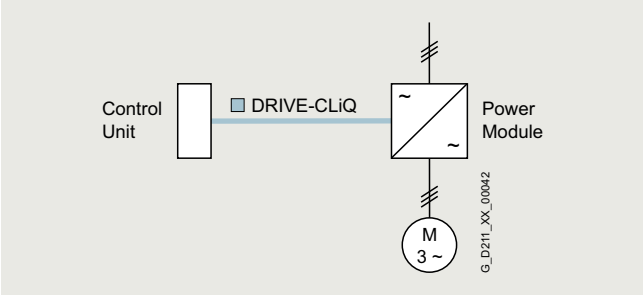

Generated energy produced during braking is converted to heat in braking resistors.

The Control Unit is plugged onto the Power Module; in addition to the complete control intelligence, the Control Unit also has all the drive interfaces for communication with higher-level systems and interfacing of add-on components.

Line Modules

Line Modules contain the central line infeed for the DC link. Various Line Modules can be selected to address the various application profiles:

- Basic Line Modules
- Smart Line Modules
- Active Line Modules

Basic Line Modules

Basic Line Modules are designed only for infeed operation, i.e. they are not capable of recovering energy to the line supply. If regenerative energy is produced, e.g. when drives brake, it must be converted into heat using a Braking Module and a braking resistor.
A line filter can be optionally installed in order to ensure compliance with the limits stipulated for Category C2 in EN 61800-3.

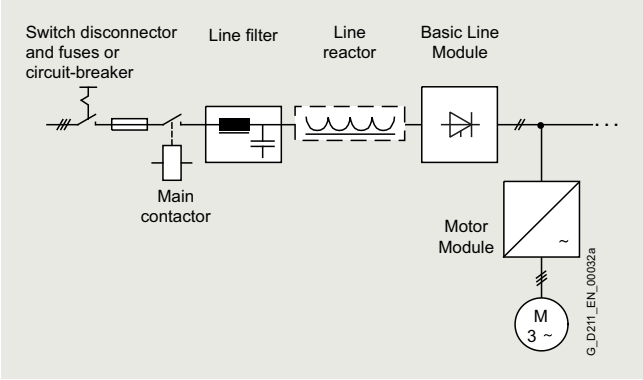

Smart Line Modules

Smart Line Modules can supply energy and return regenerative energy to the supply system. A Braking Module and braking resistor are required only if the drives need to be decelerated in a controlled manner after a power failure (i.e. when energy cannot be recovered to the supply). For an infeed using a Smart Line Module, the appropriate line reactor is required.
A line filter can be optionally installed in order to ensure compliance with the limits stipulated for Category C2 in EN 61800-3.

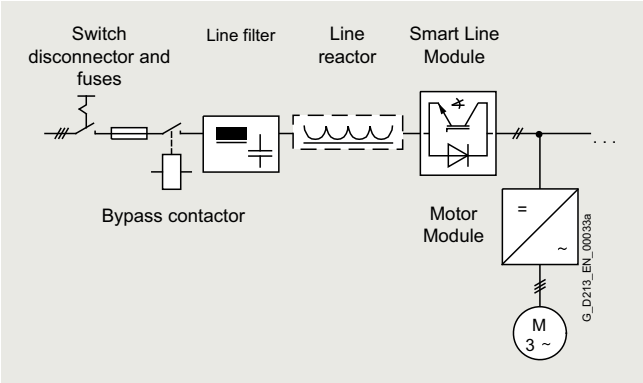

© Siemens 2024

Overview

Active Line Modules

Active Line Modules can supply energy and return regenerative energy to the supply system. A Braking Module and braking resistor are required only if the drives need to be decelerated in a controlled manner after a power failure (i.e. when energy cannot be recovered to the supply).

In contrast to Basic Line Modules and Smart Line Modules, Active Line Modules generate a controlled DC voltage that is kept constant despite fluctuations in the line supply voltage if the line supply voltage fluctuates within the permitted tolerance range. Active Line Modules in combination with an Active Interface Module draw a virtually sinusoidal current from the supply system. Almost no harmonics occur.

The total harmonic distortion factors of the current THD(I) and voltage THD(U) are typically in the range of approx. 3 % for rated current. THD(I) is calculated according to IEEE 519 (2014) and THD(U) according to IEC 61000-2-4 (2002). The stringent limit values of IEEE 519 (2014) are typically complied with.

All of the components necessary to operate an Active Line Module are integrated in the Active Interface Module.
A line filter can be optionally installed in order to ensure compliance with the limits stipulated for Category C2 in EN 61800-3.

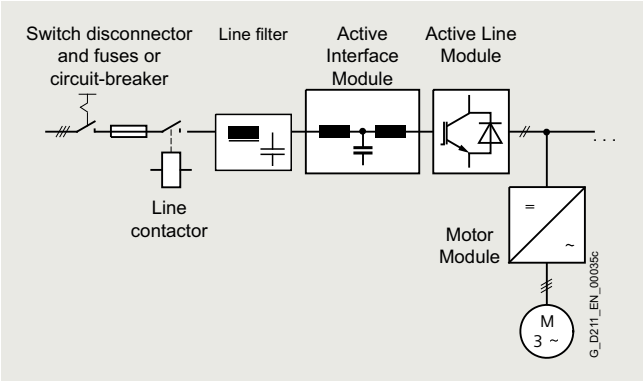

Motor Modules

A voltage DC link and an inverter for supplying a motor are integrated in the Motor Module.

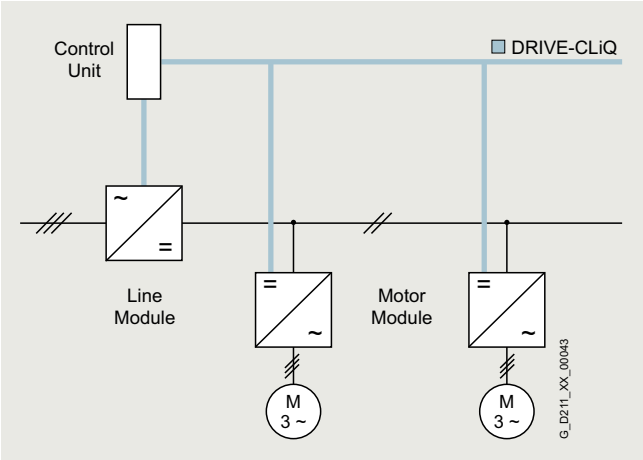

Motor Modules are designed for multi-axis drive systems and are controlled by either a CU320-2 or a SIMOTION D Control Unit. Motor Modules are interconnected through the DC link.

One or several Motor Modules are supplied with energy for the motors via the DC link. Both synchronous and induction motors can be operated.

Since the Motor Modules share the same DC link, they can exchange energy with one another, i.e. if one Motor Module operating in generator mode produces energy, the energy can be used by another Motor Module operating in motor mode. The DC link is supplied with line supply voltage by a Line Module.

Control Units

The control intelligence for all the drive axes integrated in the multi-axis group is combined in the Control Units. They also feature drive-related inputs/outputs and interfaces for communicating with higher-level controllers. Control Units are available with different ranges of functions and with different performance levels.

System components

The structure of the drive system is defined by selecting the Control Unit and Power Module or Line Module and Motor Modules. The additional components provided allow optimum adaptation of the drive system to the application.

These components are subdivided into:

- **Line-side components**, e.g. line reactors and line filters
- **DC link components** e.g. Braking Modules and braking resistors
- **Motor-side components**, e.g. motor reactors and dv/dt filters plus VPL, sine-wave filters
- **Supplementary system components**, e.g. Terminal Modules, Operator Panels, and Communication Boards
- **Encoder system interface** for connecting various encoder types to SINAMICS S120

DRIVE-CLiQ – the digital interface between the components

SINAMICS S120 components, including motors and encoders, are equipped with the high-performance DRIVE-CLiQ system interface.
Line and Motor Modules for example are connected to the Control Unit – and Terminal Modules and Sensor Modules to the drive system via DRIVE-CLiQ – simply and efficiently. Motors that also have this interface can be directly connected to the drive system.

Converter boards (Sensor Modules) for converting standard encoder signals to DRIVE-CLiQ are available for third-party motors or retrofit applications.

The electronic rating plate

An important digital linkage element of the SINAMICS S120 drive system are the electronic rating plates integrated in every component. They allow all drive components to be automatically identified via the DRIVE-CLiQ link.

The electronic rating plate contains all the relevant technical data about that particular component. In addition to the technical data, the rating plate includes logistical data (manufacturer ID, article number and ID). Since this data can be called up electronically on site or remotely, all the components used in a machine can always be individually identified, which helps simplify servicing.

© Siemens 2024

Overview

Coated modules

The following devices are equipped as standard with coated modules:

- Blocksize format units
- Booksize format units
- Chassis format units
- Control Units
- Sensor Modules
- Terminal Modules
- Advanced Operator Panel (AOP30)

The coating on the modules protects the sensitive SMD components against corrosive gases, chemically active dust and moisture.

Nickel-plated busbars

All of the copper busbars used are nickel-plated in order to achieve the best possible immunity to environmental effects. Furthermore, there is no need to clean the contacts on the customer terminals as otherwise required for bare copper connections.

Note:
For some components, parts of the copper busbars cannot be nickel-plated for technical reasons.

Function

Communication with higher-level controller and customer terminal strip

As customer interface to a higher-level control, as standard there is a PROFIBUS or PROFINET communication interface on the Control Unit CU320-2; there are also expansions such as the Terminal Module TM31, the Terminal Board TB30 and modules to communicate via CANopen or EtherNet/IP.

These interfaces can be used to connect the system to the higher-level controller using analog and digital signals, or to connect additional units.

For additional information, please refer to the SINAMICS Low Voltage Engineering Manual.

Open-loop and closed-loop control functions

SINAMICS S120 can use a dynamic, high-precision closed-loop vector control (drive object type VECTOR), or a highly dynamic closed-loop servo control (drive object type SERVO).

Software and protective functions

The software functions available as standard are described below:

Software and protective functions	Description
Setpoint input	The setpoint can be specified both internally and externally; internally as a fixed setpoint, motorized potentiometer setpoint or jog setpoint, externally via the communications interface or an analog input. The internal fixed setpoint and the motorized potentiometer setpoint can be switched or adjusted via control commands from any interface.
Motor identification	The automatic motor identification function makes commissioning faster and easier and optimizes closed-loop control of the drive.
Ramp-function generator	A user-friendly ramp-function generator with separately adjustable ramp-up and ramp-down times, together with adjustable rounding times in the lower and upper speed ranges, allows the drive to be smoothly accelerated and braked. This results in a good speed control response and contributes to the reduction of stress on the mechanical system. The down ramp can be parameterized separately for a quick stop.
$V_{dc\ max}$ controller	The $V_{dc\ max}$ controller automatically prevents overvoltages in the DC link, if the set down ramp is too short, for example. This may also extend the set ramp-down time. Note: This function only makes sense for single-axis applications.
Kinetic buffering (KIP)	For brief line supply failures, the kinetic energy of the rotating drive is used to buffer the DC link and therefore prevents fault trips. The converter remains operational as long as the drive can provide regenerative energy as a result of its motion and the DC link voltage does not drop below the shutdown threshold. When the line supply recovers within this time, the drive is again bumplessly accelerated up to its setpoint speed.
Automatic restart	The automatic restart switches the drive on again when the power is restored after a power failure, and ramps up to the current speed setpoint.
Flying restart	The flying restart function allows the converter to be switched to a motor that is still turning. With the voltage sensing capability provided by the optional VSM10, the flying restart time for large induction motors can be significantly reduced because the motor does not need to be de-magnetized.
Technology controller (PID)	Using the technology controller (PID controller) function module, level or flow controls and complex tension controls can be implemented, for example. The existing D component can act both on the system deviation as well as on the actual value (factory setting). The P, I, and D components are set separately.
Free function blocks (FFB)	Using the freely programmable function blocks, it is easy to implement logic and arithmetic functions for controlling the SINAMICS drive. The blocks can be programmed at the operator panel or the STARTER commissioning tool.
Drive Control Chart (DCC)	Drive Control Chart (DCC) is an additional tool for the easy configuration of technological functions for SINAMICS. The block library contains a large selection of control, arithmetic and logic blocks as well as extensive open-loop and closed-loop control functions. The user-friendly DCC editor enables easy graphics-based configuration, allows control loop structures to be clearly represented and provides a high degree of reusability of charts that have already been created. DCC is an add-on for the STARTER commissioning tool (see Tools and engineering).
SINAMICS Technology Extensions (SINAMICS TEC)	The SINAMICS TEC are configurable functions or Siemens technologies that can be added to extend firmware functions. These extensions are designed to allow implementation of highly complex, application-specific tasks for various sectors - such as storage and retrieval machines. Additional information about Technology Extensions (TEC) is provided in the "Technology functions" section.
I^2t sensing for motor protection	A motor model stored in the converter software calculates the motor temperature based on the current speed and load. More exact measurement of the temperature, which also takes into account the influence of the ambient temperature, is possible by means of direct temperature measurement using Pt100/KTY84 sensors in the motor winding.
Motor temperature evaluation	Motor protection by evaluating a KTY84, PTC, Pt100 or Pt1000 temperature sensor. When a KTY84 temperature sensor is connected, the limit values can be set for alarm or shutdown. When a PTC thermistor is connected, the system reaction to triggering of the thermistor (alarm or trip) can be defined.
Motor blocking protection	A blocked motor is detected and protected against thermal overloading by a fault trip.

© Siemens 2024

Overview

Software and protective functions	Description
Brake control	"Simple brake control" for control of holding brakes: The holding brake is used to secure drives against unwanted motion when deactivated. "Extended brake control" function module for complex brake control, e.g. for motor holding brakes and operational brakes: When braking with a feedback signal, the brake control reacts to the feedback signal contacts of the brake.
Write protection	Write protection to prevent unintentional changing of the setting parameters (without password function).
Know-how protection	Know-how protection for encrypting stored data, e.g. to protect configuration know-how, and to protect against changes and duplication (with password function).
Web server	The web server provides information about the drive unit via its web pages. The web server is accessed using a web browser via unsecured (http) or secured transfer protocol (https).

Power unit protection

Power unit protection	Description
Ground fault monitoring at the output	A ground fault at the output is detected by a total current monitor and results in shutdown in grounded systems.
Electronic short-circuit protection at the output	A short-circuit at the output (e.g. at the converter output terminals, in the motor cable or in the motor terminal box) is detected and the converter shuts down with a "fault".
Thermal overload protection	An alarm is issued first when the overtemperature threshold responds. If the temperature continues to rise, the unit either shuts down or independently adjusts the pulse frequency or output current so that thermal load is reduced. Once the cause of the fault has been eliminated (e.g. cooling has been improved), the original operating values are automatically resumed.

© Siemens 2024

Technical specifications

The most important directives and standards are listed below. These are used as the basis for the SINAMICS S120 built-in units in chassis format and they must be carefully observed to achieve an EMC-compliant configuration that is safe both functionally and in operation.

European directives	
2014/35/EU	Low-voltage Directive: Directive of the European Parliament and Council of February 26, 2014 for the harmonization of the laws of the member states relating to the provision of electrical equipment designed for use within certain voltage limits on the market (recast)
2014/30/EU	EMC Directive: Directive of the European Parliament and Council of February 26, 2014 for the harmonization of the laws of the member states relating to electromagnetic compatibility (recast)
2006/42/EC	Machinery Directive: Directive of the European Parliament and Council of May 17, 2006, on machinery and amending Directive 95/16/EC (recast).
2011/65/EU	RoHS II Directive: Directive of the European Parliament and of the Council of 8 June 2011 on the restriction of the use of certain hazardous substances in electrical and electronic equipment (recast)
European standards	
EN ISO 3744	Acoustics – Determination of the sound power level and sound energy level for noise sources that result from sound pressure measurements – envelope surface procedure of the accuracy class 2 for a largely free sound field over a reflecting plane
EN ISO 13849-1	Safety of machinery – Safety-related parts of control systems; Part 1: General principles for design (EN ISO 13849-1: 2006) (replaces EN 954-1)
EN 60146-1-1	Semiconductor converters – General requirements and line-commutated converters Part 1-1: Specification of basic requirements
EN 60204-1	Safety of machinery – Electrical equipment of machines; Part 1: General requirements
EN 60529	Degrees of protection provided by enclosures (IP code)
IEC 61508-1	Functional safety of electrical/electronic/programmable electronic safety-related systems Part 1: General requirements
IEC 61508-2	Functional safety of electrical/electronic/programmable electronic safety-related systems Part 2: Requirements for electrical/electronic/programmable electronic safety-related systems
IEC 61508-3	Functional safety of electrical/electronic/programmable electronic safety-related systems Part 3: Software requirements
EN 61800-2	Adjustable speed electrical power drive systems Part 2: General requirements – Rating specifications for low voltage adjustable frequency AC power drive systems
EN 61800-3	Adjustable speed electrical power drive systems Part 3: EMC requirements and specific test methods
EN 61800-5-1	Adjustable speed electrical power drive systems Part 5: Safety requirements Main section 1: Electrical and thermal requirements
EN 61800-5-2	Adjustable speed electrical power drive systems Part 5-2: Safety requirements – Functional safety (IEC 61800-5-2: 2007)
North American standards	
UL 508A	Industrial Control Panels
UL 508C	Power Conversion Equipment
UL 61800-5-1	Adjustable Speed Electrical Power Drive Systems - Part 5-1: Safety requirements – Electrical, thermal and energy
CSA C22.2 No. 14	Industrial Control Equipment
Certificates of suitability	
cULus, cURus	Testing by UL (Underwriters Laboratories, www.ul.com) according to UL and CSA standards

© Siemens 2024

Technical specifications

General technical specifications

Unless clearly specified otherwise, the following technical data are valid for all the following components of the air-cooled SINAMICS S120 drive system in chassis format.

Electrical specifications	
Line voltages	380 ... 480 V 3 AC ±10 % (-15 % <1 min) 500 ... 690 V 3 AC ±10 % (-15 % <1 min)
Line supply types	Grounded TN/TT systems and non-grounded IT systems
Line frequency	47 ... 63 Hz
Overvoltage category	III acc. to EN 61800-5-1
Electronics power supply	24 V DC, -15 % +20 % implemented as PELV circuit in accordance with EN 61800-5-1 Ground = negative pole grounded via the electronics
Rated short-circuit current per IEC, in conjunction with the specified fuses or circuit breakers • 1.1 ... 447 kW • 448 ... 671 kW • 672 ... 1193 kW • > 1194 kW	 65 kA 84 kA 170 kA 200 kA
Rated short-circuit current SCCR (Short Circuit Current Rating) according to UL508C (up to 600 V), in conjunction with the specified fuses or circuit breakers • 1.1 ... 447 kW • 448 ... 671 kW • 672 ... 1193 kW • > 1194 kW	 65 kA 84 kA 170 kA 200 kA
Control method	Vector/Servo control with and without encoder or V/f control
Fixed speeds	15 fixed speeds plus 1 minimum speed, parameterizable (in the default setting, 3 fixed setpoints plus 1 minimum speed are selectable using terminal strip/PROFIBUS/PROFINET)
Skippable speed ranges	4, parameterizable
Setpoint resolution	0.001 r/min digital (14 bits + sign) 12 bits analog
Braking operation	With Active Line Modules and Smart Line Modules, four-quadrant operation as standard (energy recovery). With Basic Line Modules, two-quadrant operation as standard, braking by means of an optional braking chopper, or alternatively by a Motor Module.
Mechanical specifications	
Degree of protection	IP00 or IP20 depending on type
Protection class	I acc. to EN 61800-5-1
Touch protection	EN 50274/DGUV regulation 3 when used as intended
Cooling method	Forced air cooling AF according to EN 60146

© Siemens 2024

Technical specifications

Ambient conditions	Storage [1]	Transport [1]	Operation
Ambient temperature	-25 ... +55 °C (-13 ... 131 °F) Class 1K4 acc. to EN 60721-3-1 (1997)	-25 ... +70 °C (-13 ... +158 °F) Class 2K4 acc. to EN 60721-3-2 (1997)	Line-side components, Power Modules, Line Modules and Motor Modules: 0 … 40 °C (32 ... 104 °F) without derating Up to 55 °C (131 °F), see derating data Control Units, supplementary system components, and Sensor Modules: 0 ... 55 °C (32 ... 131 °F) (for operation in a control cabinet) DC link components and motor-side components: 0 ... 55 °C (32 ... 131 °F)
Relative humidity Condensation, splashwater, and ice formation not permitted (EN 60204, Part 1)	5 ... 95 % Class 1K4 acc. to EN 60721-3-1 (1997)	5 ... 95 % at 40 °C (104 °F) Class 2K3 acc. to EN 60721-3-2 (1997)	5 ... 95 % Class 3K3 acc. to EN 60721-3-3 (2002)
Environmental class/harmful chemical substances	Class 1C2 acc. to EN 60721-3-1 (1997)	Class 2C2 acc. to EN 60721-3-2 (1997)	Class 3C2 acc. to EN 60721-3-3 (2002)
Organic/biological influences	Class 1B1 acc. to EN 60721-3-1 (1997)	Class 2B1 acc. to EN 60721-3-2 (1997)	Class 3B1 acc. to EN 60721-3-3 (2002)
Mechanically active substances	Class 1S1 acc. to EN 60721-3-1 (1997)	Class 2S1 acc. to EN 60721-3-2 (1997)	Class 3S1 acc. to EN 60721-3-3 (2002)
Degree of pollution	2 acc. to EN 61800-5-1		
Installation altitude	Up to 2000 m (6562 ft) above sea level without derating > 2000 m (6562 ft) above sea level, see derating data		
Mechanical stability	**Storage [1]**	**Transport [1]**	**Operation**
Vibratory load	–	Class 2M2 acc. to EN 60721-3-2 (1997)	Test values acc. to EN 60068-2-6 test Fc: • 10 ... 58 Hz with constant deflection 0.075 mm • 58 ... 150 Hz with constant acceleration 9.81 m/s^2 (1 × *g*)
Shock load	–	Class 2M2 acc. to EN 60721-3-2 (1997)	Test values according to EN 60068-2-27 test Ea: 98 m/s^2 (10 × *g*)/20 ms
Compliance with standards			
Conformances/certificates of suitability, according to	CE (EMC Directive No. 2014/30/EU, Low Voltage Directive No. 2014/35/EU, and Machinery Directive 2006/42/EC for functional safety) RCM, RoHS II, UKCA cULus (only for devices connected to line supply voltages 380 ... 480 V 3 AC and 500 ... 600 V 3 AC)		
Radio interference suppression	SINAMICS S120 chassis format units are not designed for connection to the public grid (first environment). Radio interference suppression is compliant with the EMC product standard for variable-speed drives EN 61800-3, "second environment" (industrial line supplies). EMC disturbances can occur when connected to the public grid. However, if additional measures are taken (e.g. → line filter), it can also be operated in the "first environment".		

Deviations from the specified class are underlined.

[1] In transport packaging.

© Siemens 2024

Characteristic curves

Derating data, chassis format

Air-cooled SINAMICS G120 chassis format units and the associated system components are rated for an ambient temperature of 40 °C and installation altitudes up to 2000 m above sea level.

At ambient temperatures > 40 °C, the output current must be reduced. Ambient temperatures above 55 °C are not permissible.

At installation altitudes > 2000 m above sea level, it must be taken into account that the air pressure, and therefore air density, decreases as the height increases. As a consequence, the cooling efficiency and the insulation capacity of the air also decrease.

Due to the reduced cooling efficiency, it is necessary, on the one hand, to reduce the ambient temperature and on the other hand, to reduce the heat loss in the built-in unit by reducing the output current, whereby ambient temperatures lower than 40 °C may be offset to compensate.

The following table lists the permissible output currents depending on the installation altitude and ambient temperature. The specified values already include a permitted compensation in respect of installation altitude and ambient temperatures < 40 °C (temperature at the air intake of the built-in unit).

The values apply under the precondition that a cooling air flow through the devices is guaranteed as specified in the technical specifications.

As additional measure for installation altitudes from 2000 m up to 5000 m, an isolating transformer is required in order to reduce transient overvoltages according to EN 60664-1.
For additional information, please refer to the SINAMICS Low Voltage Engineering Manual.

Current-derating factors for SINAMICS S120 chassis units as a function of the ambient/air intake temperature and the installation altitude

Installation altitude above sea level	**Current derating factor** (as a percentage of the rated current) for an ambient/air intake temperature of							
m (ft)	20 °C (68 °F)	25 °C (77 °F)	30 °C (86 °F)	35 °C (95 °F)	40 °C (104 °F)	45 °C (113 °F)	50 °C (122 °F)	55 °C (131 °F)
0 ... 2000 (0 ... 6562)						**93,3 %**	**86,7 %**	**80 %**
2001 ... 2500 (6565 ... 8202)					**96,3 %**			
2501 ... 3000 (8205 ... 9843)		100 %		**98,7 %**				
3001 ... 3500 (9846 ... 11483)								
3501 ... 4000 (11486 ... 13123)			**96,3 %**					
4001 ... 4500 (13127 ... 14764)		**97,5 %**						
4501 ... 5000 (14767 ... 16404)	**98,2 %**							

Current derating for Power Modules and Motor Modules in chassis format as a function of the pulse frequency

To reduce motor noise or to increase output frequency, the pulse frequency can be increased relative to the factory setting (1.25 kHz or 2 kHz). When the pulse frequency is increased, the derating factor of the output current must be taken into account. This derating factor must be applied to the currents specified in the technical specifications.

For additional information, please refer to the SINAMICS Low Voltage Engineering Manual.

The following table lists the rated output currents of the SINAMICS S120 Power Modules and Motor Modules with pulse frequency set in the factory as well as the current derating factors (permissible output currents referred to the rated output current) for higher pulse frequencies.

Derating factor of the output current as a function of the pulse frequency for units with a rated pulse frequency of 2 kHz

Power Module Motor Module	Type rating at 400 V	Output current at 2 kHz	**Derating factor** at pulse frequency				
6SL3310-... 6SL3320-...	kW	A	2.5 kHz	4 kHz	5 kHz	7.5 kHz	8 kHz
380 ... 480 V 3 AC							
1TE32-1AA3	110	210	95 %	82 %	74 %	54 %	50 %
1TE32-6AA3	132	260	95 %	83 %	74 %	54 %	50 %
1TE33-1AA3	160	310	97 %	88 %	78 %	54 %	50 %
1TE33-8AA3	200	380	96 %	87 %	77 %	54 %	50 %
1TE35-0AA3	250	490	94 %	78 %	71 %	53 %	50 %
1TE41-4AS3	800	1330	88 %	55 %	-	-	-

© Siemens 2024

Characteristic curves

Derating factor of the output current as a function of the pulse frequency for units with a rated pulse frequency of 1.25 kHz

Motor Module	Type rating at 400 V or 690 V	Output current at 1.25 kHz	**Derating factor** at pulse frequency					
6SL3320-...	kW	A	2 kHz	2.5 kHz	4 kHz	5 kHz	7.5 kHz	8 kHz
380 ... 480 V 3 AC								
1TE36-1AA3	315	605	83 %	72 %	64 %	60 %	40 %	36%
1TE37-5AA3	400	745	83 %	72 %	64 %	60 %	40 %	36%
1TE38-4AA3	450	840	87 %	79 %	64 %	55 %	40 %	37 %
1TE41-0AA3	560	985	92 %	87 %	70 %	60 %	50 %	47 %
1TE41-2AA3	710	1260	92 %	87 %	70 %	60 %	50 %	47 %
1TE41-4AA3	800	1405	97 %	95 %	74 %	60 %	50 %	47 %
500 ... 690 V 3 AC								
1TG28-5AA3	75	85	93 %	89 %	71 %	60 %	40 %	-
1TG31-0AA3	90	100	92 %	88 %	71 %	60 %	40 %	-
1TG31-2AA3	110	120	92 %	88 %	71 %	60 %	40 %	-
1TG31-5AA3	132	150	90 %	84 %	66 %	55 %	35 %	-
1TG31-8AA3	160	175	92 %	87 %	70 %	60 %	40 %	-
1TG32-2AA3	200	215	92 %	87 %	70 %	60 %	40 %	-
1TG32-6AA3	250	260	92 %	88 %	71 %	60 %	40 %	-
1TG33-3AA3	315	330	89 %	82 %	65 %	55 %	40 %	-
1TG34-1AA3	400	410	89 %	82 %	65 %	55 %	35 %	-
1TG34-7AA3	450	465	92 %	87 %	67 %	55 %	35 %	-
1TG35-8AA3	560	575	91 %	85 %	64 %	50 %	35 %	-
1TG37-4AA3	710	735	87 %	79 %	64 %	55 %	35 %	-
1TG38-1AA3	800	810	97 %	95 %	71 %	55 %	35 %	-
1TG38-8AA3	900	910	92 %	87 %	67 %	55 %	33 %	-
1TG41-0AA3	1000	1025	91 %	86 %	64 %	50 %	30 %	-
1TG41-3AA3	1200	1270	87 %	79 %	55 %	40 %	25 %	-

Maximum output frequencies achieved by increasing the pulse frequency

The adjustable pulse frequencies – and therefore the output frequencies that can be achieved with the factory-set current controller clock cycles – are listed below.

Current controller clock cycle T_I	**Adjustable pulse frequency f_p**	**Max. achievable output frequency f_A**		
		V/f mode	**Vector mode**	**Servo mode**
250 µs [1]	2 kHz	166 Hz	166 Hz	333 Hz
	4 kHz	333 Hz	333 Hz	550 Hz [3]
	8 kHz	550 Hz [3]	480 Hz	550 Hz [3]
400 µs [2]	1.25 kHz	104 Hz	104 Hz	–
	2.5 kHz	208 Hz	208 Hz	–
	5.0 kHz	416 Hz	300 Hz	–
	7.5 kHz	550 Hz [3]	300 Hz	–

[1] As factory setting, the following devices have a current controller clock cycle of 250 µs - and a pulse frequency of 2 kHz:
- 3 AC 380 ... 480 V: ≤250 kW / 490 A, 6SL3320-1TE41-4AS3

[2] As factory setting, the following devices have a current controller clock cycle of 400 µs and a pulse frequency of 1.25 kHz:
- 380 ... 480 V 3 AC: ≥315 kW / 605 A, except 6SL3320-1TE41-4AS3,
- 500 ... 690 V 3 AC: All power ratings

[3] With the "High output frequencies" license, which can be ordered as option J01 on the CompactFlash card for SINAMICS S120, the maximum output frequency is increased up to 650 Hz.
For more information, see
https://support.industry.siemens.com/cs/document/104020669

© Siemens 2024

Characteristic curves

Overload capability

SINAMICS S120 built-in units have an overload reserve, e.g. to handle breakaway torques. If larger surge loads occur, this must be taken into account in the configuration. For drives with overload requirements, the appropriate base load current must, therefore, be used as a basis for the required load.

The permissible overload levels are valid under the prerequisite that the drive units are operated with their base-load current before and after the overload condition based on a duty cycle duration of 300 s.

Another precondition is that the Power Modules or the Motor Modules are operated at their factory-set pulse frequency at output frequencies > 10 Hz.

For temporary, periodic duty cycles with high variations of load within the duty cycle, the relevant sections of the SINAMICS Low Voltage Engineering Manual must be observed.

Power Modules and Motor Modules

The base load current for a low overload I_L is based on a duty cycle of 110 % for 60 s or 150 % for 10 s.

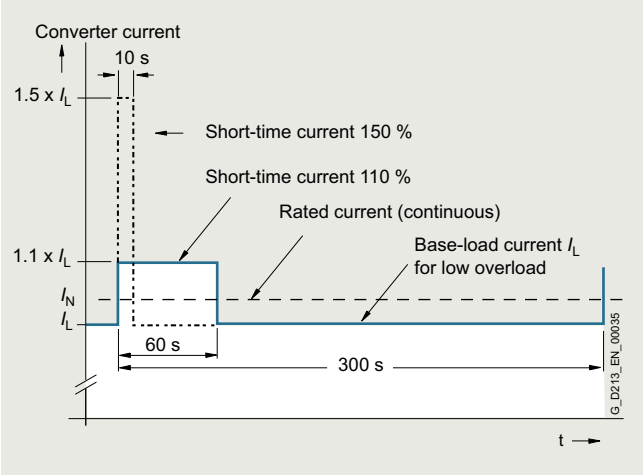

Low overload

The base load current for a high overload I_H is based on a duty cycle of 150 % for 60 s or 160 % for 10 s.

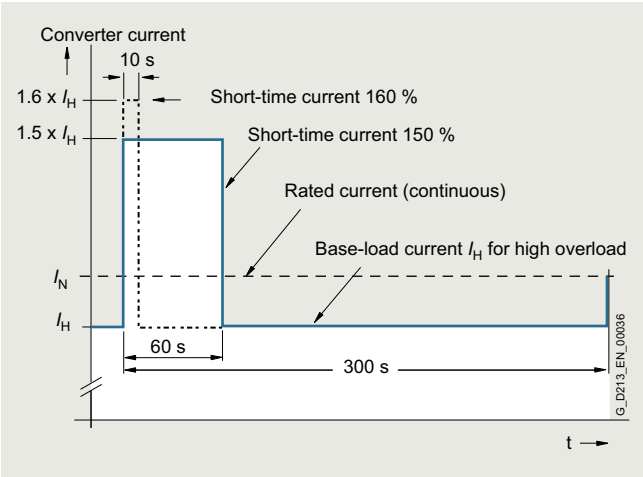

High overload

Line Modules

The base-load current for a high overload $I_{H\,DC}$ is the basis for a duty cycle of 150 % for 60 s or $I_{max\,DC}$ for 5 s.

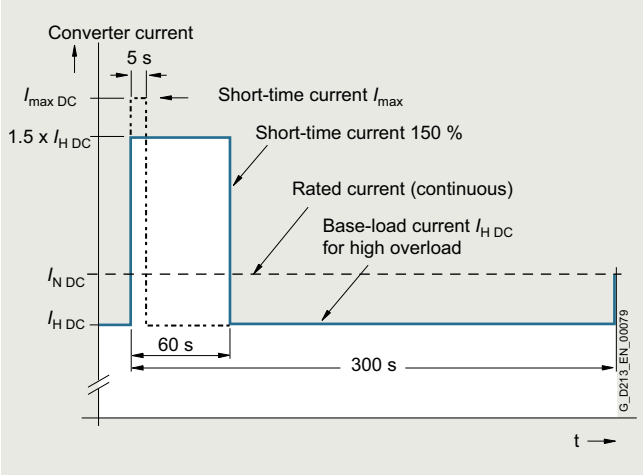

High overload

© Siemens 2024

Overview

The Power Module comprises a line rectifier, a DC link and an inverter to supply the motor.

Power Modules are designed for drives that are not capable of regenerating energy to the mains supply. Regenerative energy produced while braking is converted to heat using braking resistors.

Power Modules in the chassis format can be connected to grounded TN/TT systems and non-grounded IT systems.

Design

The Power Modules have the following interfaces as standard:

- 1 line supply connection
- 1 motor connection
- 1 connection for the 24 V DC electronics power supply
- 1 DC link connection (DCPA, DCNA) for connecting a Braking Module
- 1 DC link connection (DCPS, DCNS) for connecting a dv/dt filter
- 3 DRIVE-CLiQ sockets
- 1 temperature sensor input for KTY84-130, Pt1000, PTC or Pt100 (Pt1000 can be used from firmware V4.7 HF17 and higher)
- 1 connection for Safe Brake Adapter
- 1 connection for Safety Integrated
- 2 PE/protective conductor connections

The Power Modules are controlled by the CU310-2 Control Unit that can be integrated into the Power Module.

The status of the Power Modules is indicated via three LEDs.

The scope of supply of the Power Modules includes:

- 1 DRIVE-CLiQ cable for connection to the CU310-2 Control Unit
- 1 connecting cable 24 V DC for power supply to the CU310-2 Control Unit
- 1 mounting plate for attaching the CU310-2 Control Unit
- 1 set of warning labels in 30 languages (BG, CN, CZ, DE, DK, EE, ES, FI, FR, GB, GR, HU, IE, IS, IT, JP, KR, LT, LV, MT, NL, NO, PL, PT, RO, RU, SE, SI, SK, TR)

Application in multi-axis systems

Power Modules in chassis format can also be connected directly via DRIVE-CLiQ to a separate CU320-2 or SIMOTION D4x5-2 Control Unit or Controller Extension CX32-2. The appropriate DRIVE-CLiQ cable for the required distance must be ordered (see section MOTION-CONNECT connection systems).

Selection and ordering data

Type rating at 400 V	Rated output current	**Power Module**
kW	A	Article No.
Line voltage 380 ... 480 V 3 AC		
110	210	**6SL3310-1TE32-1AA3**
132	260	**6SL3310-1TE32-6AA3**
160	310	**6SL3310-1TE33-1AA3**
200	380	**6SL3310-1TE33-8AA3**
250	490	**6SL3310-1TE35-0AA3**

Extension of warranty

Siemens offers for SINAMICS S120 chassis units an extension of warranty/Service Protect up to 6½ years.

Details can be found in chapter Services and Documentation

Accessories for re-ordering

Description	Article No.
Dust protection blanking plugs (50 units) For DRIVE-CLiQ port	**6SL3066-4CA00-0AA0**

For line and motor-side components, Braking Modules as well as recommended line-side system components, see System components.

© Siemens 2024

Integration

The Power Modules communicate with the higher-level control module via DRIVE-CLiQ. The Control Unit in this case could be a CU310-2, CU320-2 or a SIMOTION D Control Unit.

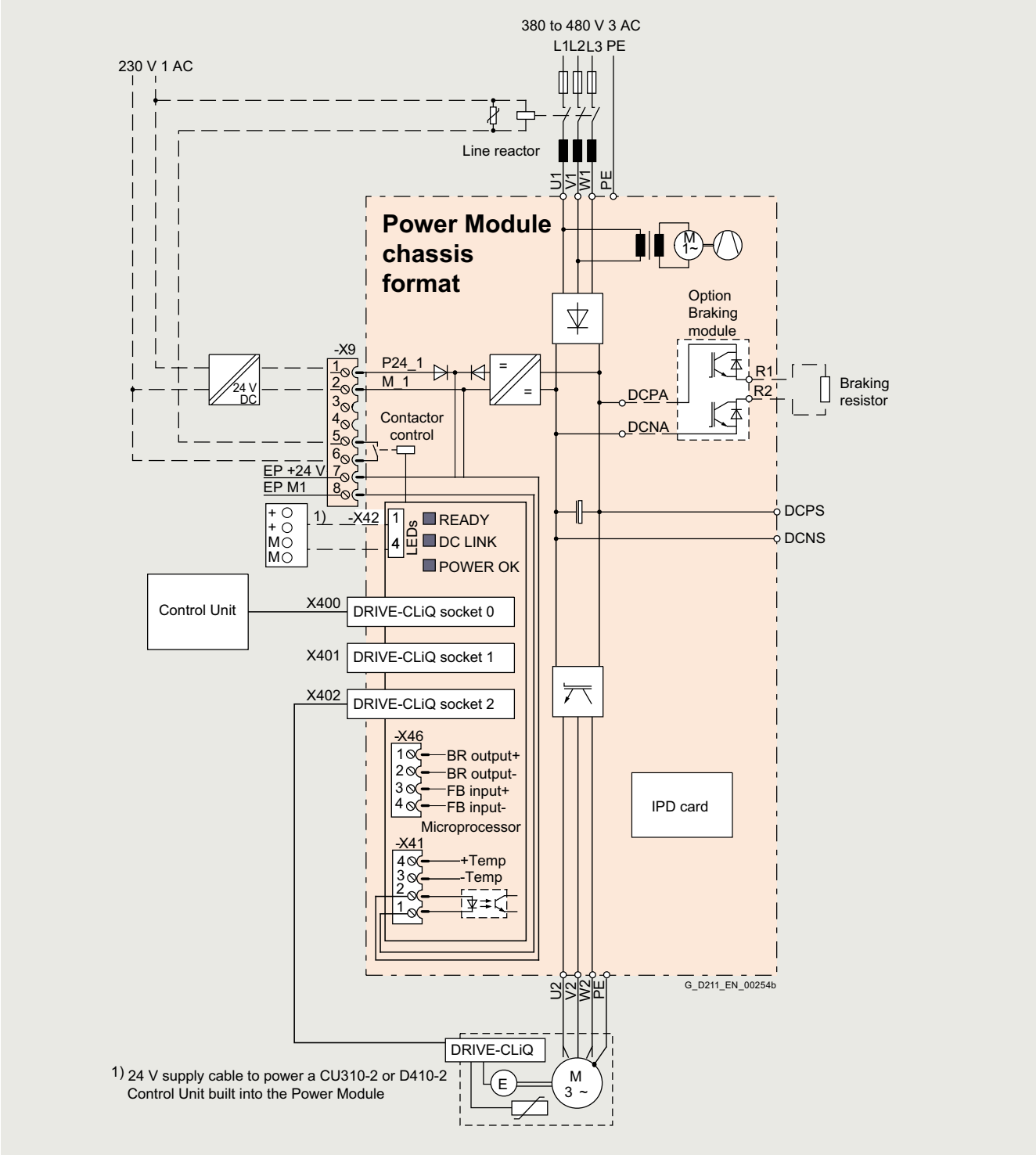

Connection example of a Power Module

Note:
The integrated 24 V power supply at connector X42 can have a maximum load of 2 A. When the Control Unit is supplied from the integrated power supply, the total load of the digital outputs must be carefully observed to ensure that the 2 A is not exceeded.

© Siemens 2024

Technical specifications

General technical specifications

Electrical specifications	
Line connection voltage Up to 2000 m (6562 ft) above sea level	380 ... 480 V 3 AC ±10 % (-15 % <1 min)
Line power factor for a 3 AC line supply voltage and output power • Basic fundamental (cos φ_1) • Total (λ)	 >0.96 0.75 ... 0.93
DC link voltage, approx. [1]	1.35 × line voltage
Output voltage, approx.	0.97 x U_{line}
Output frequency [2] • Control mode Servo • Control mode Vector • Control mode V/f	 0 ... 550 Hz 0 ... 550 Hz 0 ... 550 Hz
Main contactor control • Terminal strip -X9/5-6	 240 V AC, max. 8 A 30 V DC, max. 1 A
Safety Integrated	Safety Integrity Level 2 (SIL2) acc. to IEC 61508, Performance Level d (PLd) acc. to EN ISO 13849-1 and Control Category 3 acc. to EN ISO 13849-1.

[1] The DC link voltage is unregulated and load-dependent.
For additional information, please refer to the SINAMICS Low Voltage Engineering Manual.

[2] Please note:
- Note the correlation between max. output frequency, pulse frequency and current derating. Higher output frequencies on request For more information, see https://support.industry.siemens.com/cs/document/104020669
- The correlation between the minimum output frequency and permissible output current (current derating).
For additional information, please refer to the SINAMICS Low Voltage Engineering Manual.

© Siemens 2024

Technical specifications

Line voltage 380 ... 480 V 3 AC		Power Modules				
		6SL3310-1TE32-1AA3	6SL3310-1TE32-6AA3	6SL3310-1TE33-1AA3	6SL3310-1TE33-8AA3	6SL3310-1TE35-0AA3
Type rating						
• At I_L (50 Hz 400 V) [1]	kW	**110**	**132**	**160**	**200**	**250**
• At I_H (50 Hz 400 V) [1]	kW	90	110	132	160	200
• At I_L (60 Hz 460 V) [2]	hp	150	200	250	300	400
• At I_H (60 Hz 460 V) [2]	hp	150	200	200	250	350
Output current						
• Rated current $I_{N\,O}$	A	210	260	310	380	490
• Base-load current I_L [3]	A	205	250	302	370	477
• Base-load current I_H [4]	A	178	233	277	340	438
• Maximum current $I_{max\,O}$	A	307	375	453	555	715
Input current						
• Rated current $I_{N\,I}$	A	229	284	338	395	509
• Maximum current $I_{max\,I}$	A	335	410	495	606	781
Current demand						
• 24 V DC auxiliary power supply	A	0.8	0.8	0.9	0.9	0.9
Pulse frequency [5]						
• Rated frequency	kHz	2	2	2	2	2
• Pulse frequency, max.						
- Without current derating	kHz	2	2	2	2	2
- With current derating	kHz	8	8	8	8	8
Power loss, max. [6]						
• At 50 Hz 400 V	kW	2.46	3.27	4	4.54	5.78
• At 60 Hz 460 V	kW	2.54	3.36	4.07	4.67	5.96
Cooling air requirement	m^3/s (ft^3/s)	0.17 (6.00)	0.23 (8.12)	0.36 (12.7)	0.36 (12.7)	0.36 (12.7)
Sound pressure level L_{pA} (1 m) at 50/60 Hz	dB	64/67	71/71	69/73	69/73	69/73
Line connection U1, V1, W1		M10 screw	M10 screw	M10 screw	M10 screw	M10 screw
• Conductor cross-section, max. (IEC)	mm^2	2 × 185	2 × 185	2 × 240	2 × 240	2 × 240
Motor connection U2/T1, V2/T2, W2/T3		M10 screw	M10 screw	M10 screw	M10 screw	M10 screw
• Conductor cross-section, max. (IEC)	mm^2	2 × 185	2 × 185	2 × 240	2 × 240	2 × 240
Cable length, max. [7]						
• Shielded	m (ft)	300 (984)	300 (984)	300 (984)	300 (984)	300 (984)
• Unshielded	m (ft)	450 (1476)	450 (1476)	450 (1476)	450 (1476)	450 (1476)
PE1/GND connection		M10 screw	M10 screw	M10 screw	M10 screw	M10 screw
• Conductor cross-section, max. (IEC)	mm^2	2 × 185	2 × 185	2 × 240	2 × 240	2 × 240
PE2/GND connection		M10 screw	M10 screw	M10 screw	M10 screw	M10 screw
• Conductor cross-section, max. (IEC)	mm^2	2 × 185	2 × 185	2 × 240	2 × 240	2 × 240
Degree of protection		IP20	IP20	IP20	IP20	IP20
Dimensions						
• Width	mm (in)	326 (12.8)	326 (12.8)	326 (12.8)	326 (12.8)	326 (12.8)
• Height	mm (in)	1400 (55.1)	1400 (55.1)	1533 (60.4)	1533 (60.4)	1533 (60.4)
• Depth	mm (in)	356 (14.0) [8]	356 (14.0) [8]	549 (21.6)	549 (21.6)	549 (21.6)
Weight, approx.	kg (lb)	104 (229)	104 (229)	162 (357)	162 (357)	162 (357)
Frame size		FX	FX	GX	GX	GX
Minimum short-circuit current [9]	kA	3	3.6	4.4	4.4	8

[1] Rated power of a typical 6-pole standard induction motor based on I_L or I_H for 400 V 3 AC 50 Hz.

[2] Rated power of a typical 6-pole standard induction motor based on I_L or I_H for 460 V 3 AC 60 Hz.

[3] The base-load current I_L is based on a load cycle of 110 % for 60 s or 150 % for 10 s with a load cycle duration of 300 s.

[4] The base-load current I_H is based on a duty cycle of 150 % for 60 s or 160 % for 10 s with a duty cycle duration of 300 s.

[5] Information regarding the correlation between the pulse frequency and maximum output current/output frequency is provided in the SINAMICS Low Voltage Engineering Manual

[6] The specified power loss represents the maximum value at 100 % utilization. The value is lower under normal operating conditions.

[7] Longer cable lengths for specific configurations are available on request. For additional information, please refer to the SINAMICS Low Voltage Engineering Manual.

[8] Depth = 421 mm (16.6 in) including front cover when CU310-2 Control Unit is installed.

[9] Current required for reliably triggering protective devices.

© Siemens 2024

3

Overview

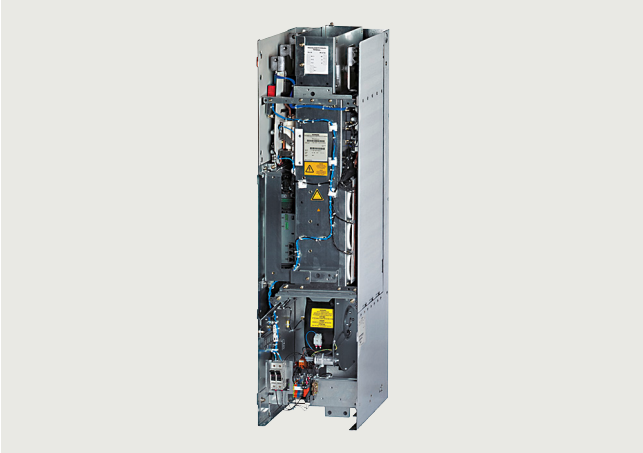

Basic Line Modules are available for applications in which no energy is returned to the supply or where the energy exchange between motor and generator axes takes place in the DC link. Basic Line Modules are designed for connection to grounded TN/TT and non-grounded IT supply systems.

The Basic Line Modules are available in different frame sizes. With frame sizes FB and GB, a fully controlled thyristor bridge is used to pre-charge the Basic Line Modules and connected Motor Modules. The thyristors normally operate with a trigger delay angle of 0°.

Basic Line Modules, frame size GD for 900 kW (400 V) or 1500 kW (690 V) include a diode bridge, and the DC link is pre-charged via a separate line-side pre-charging circuit.

A Braking Module of the appropriate frame size can be integrated into a Basic Line Module in order to permit, in conjunction with an external braking resistor, regenerative operation of the drive system (see section System components → DC link components).

Design

The Basic Line Modules have the following interfaces as standard:

- 1 line supply connection
- 1 connection for the 24 V DC electronics power supply
- 1 DC link connection (DCP, DCN) for supplying the connected Motor Modules
- 1 DC link connection (DCPA, DCNA) for connecting a Braking Module
- 3 DRIVE-CLiQ sockets
- 1 temperature sensor input for KTY84-130, Pt1000 or PTC (Pt1000 can be used from firmware V4.7 HF17 and higher)
- 1 PE/protective conductor connection

The status of the Basic Line Modules is indicated via three LEDs.

The scope of supply of the Basic Line Modules includes:

- DRIVE-CLiQ cable to connect to a Control Unit
- DRIVE-CLiQ cable to connect the Control Unit to the first Motor Module
- 1 set of warning labels in 30 languages (BG, CN, CZ, DE, DK, EE, ES, FI, FR, GB, GR, HU, IE, IS, IT, JP, KR, LT, LV, MT, NL, NO, PL, PT, RO, RU, SE, SI, SK, TR)

Pre-charging circuit for the Basic Line Modules, frame size GD

Unlike Basic Line Modules in frame sizes FB and GB, a Basic Line Module in frame size GD requires a separate precharging circuit. The pre-charging circuit components must be ordered separately.

During startup, the pre-charging circuit ensures that the DC link capacitors of the Basic Line Module and the connected Motor Modules are pre-charged with current limiting. After pre-charging has been completed, the circuit breaker is closed and the pre-charging circuit bypassed; the Basic Line Module is then directly connected to the line supply.

The pre-charging circuit comprises a pre-charging contactor and pre-charging resistors; the circuit must be protected against overcurrent using suitable protection measures. To increase the permissible DC link capacitance, the pre-charging resistors can also be connected in parallel in each phase.

More information on the pre-charging circuit is to be found in the SINAMICS Low Voltage Engineering Manual.

For components for the pre-charging circuit and for recommended line-side system components, see System components.

Selection and ordering data

Rated power at 400 V or 690 V	Rated infeed current	**Basic Line Module**
kW	A	Article No.
Line voltage 380 ... 480 V 3 AC		
200	365	**6SL3330-1TE34-2AA3**
250	460	**6SL3330-1TE35-3AA3**
400	710	**6SL3330-1TE38-2AA3**
560	1010	**6SL3330-1TE41-2AA3**
710	1265	**6SL3330-1TE41-5AA3**
900	1630	**6SL3330-1TE41-8AA3**
Line voltage 500 ... 690 V 3 AC		
250	260	**6SL3330-1TG33-0AA3**
355	375	**6SL3330-1TG34-3AA3**
560	575	**6SL3330-1TG36-8AA3**
900	925	**6SL3330-1TG41-1AA3**
1100	1180	**6SL3330-1TG41-4AA3**
1500	1580	**6SL3330-1TG41-8AA3**

Extension of warranty

Siemens offers for SINAMICS S120 chassis units an extension of warranty/Service Protect up to 6½ years.

Details can be found in chapter Services and Documentation

Accessories for re-ordering

Description	Article No.
Dust protection blanking plugs (50 units) For DRIVE-CLiQ port	**6SL3066-4CA00-0AA0**

For line-side components and recommended line-side system components, see System components.

© Siemens 2024

Integration

The Basic Line Modules communicate with the higher-level control module via DRIVE-CLiQ. The control module in this case can be a CU320-2 or a SIMOTION D Control Unit. An external 24 V DC power supply is required to operate Basic Line Modules.

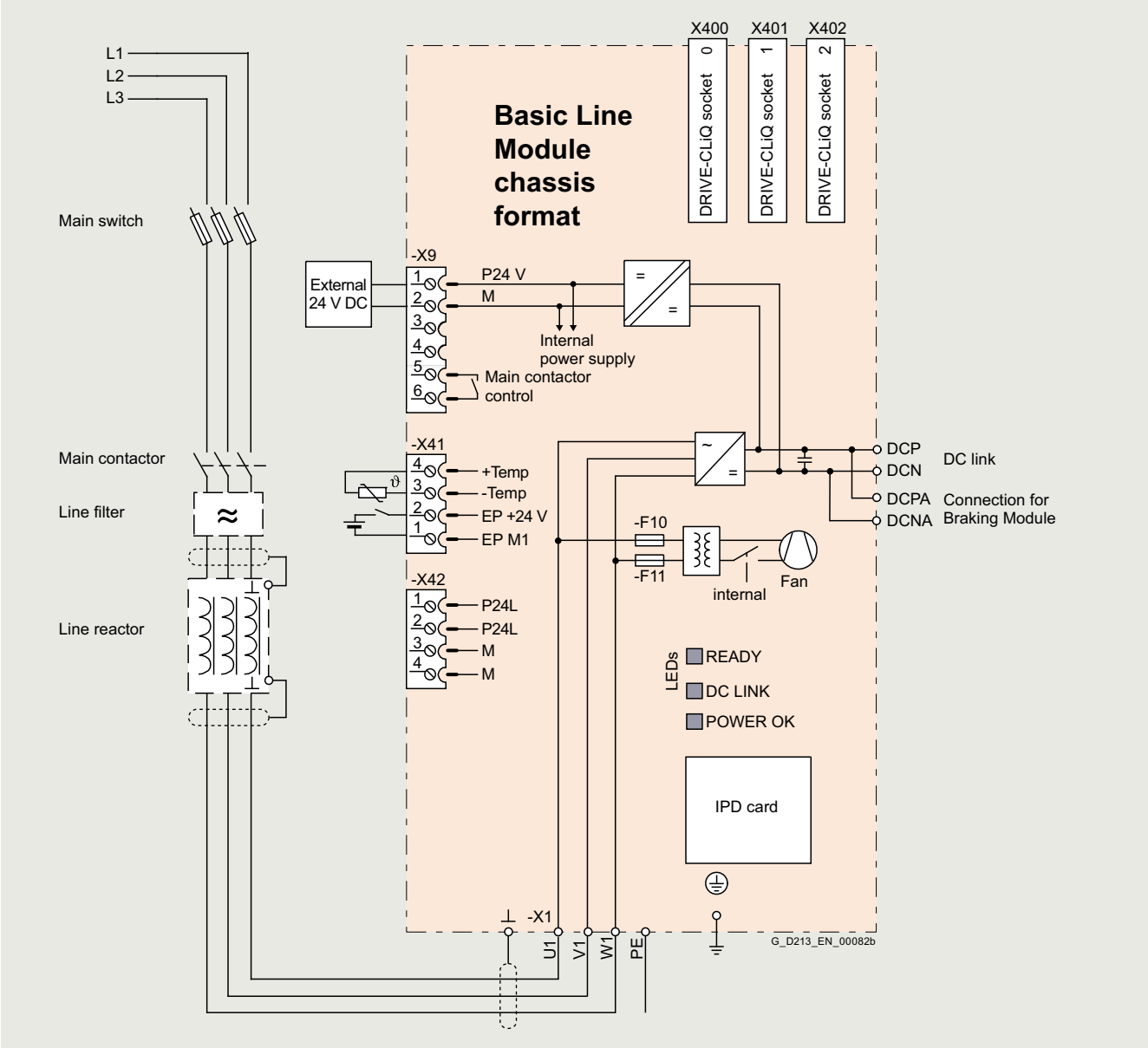

Connection example for Basic Line Module, frame sizes FB, GB

© Siemens 2024

Integration

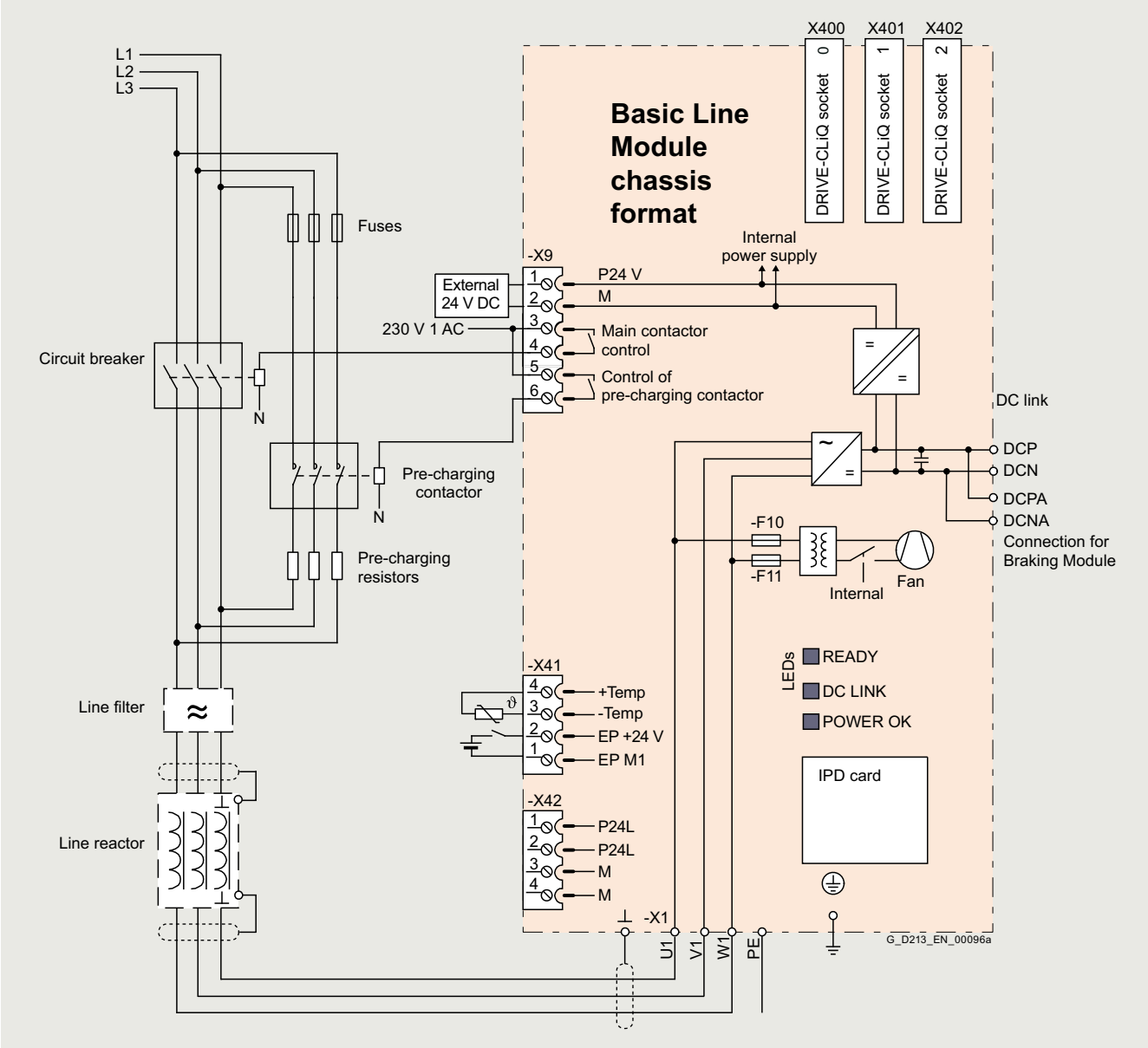

Connection example, Basic Line Module, frame size GD

© Siemens 2024

Technical specifications

General technical specifications

Electrical specifications	
Line power factor at rated power • Basic fundamental (cos φ_1) • Total (λ)	 >0.96 0.75 ... 0.93
Efficiency	>99 %
DC link voltage, approx. [1]	1.35 × line voltage under partial load 1.32 × line voltage under full load
Main contactor control • Terminal strip -X9/5-6	 240 V AC, max. 8 A 30 V DC, max. 1 A

[1] The DC link voltage is unregulated and load-dependent.
For additional information, please refer to the SINAMICS Low Voltage Engineering Manual.

© Siemens 2024

Technical specifications

Line voltage 380 ... 480 V 3 AC		Basic Line Modules					
		6SL3330-1TE34-2AA3	6SL3330-1TE35-3AA3	6SL3330-1TE38-2AA3	6SL3330-1TE41-2AA3	6SL3330-1TE41-5AA3	6SL3330-1TE41-8AA3
Rated power							
• At $I_{N\,DC}$ (50 Hz 400 V)	kW	**200**	**250**	**400**	**560**	**710**	**900**
• At $I_{H\,DC}$ (50 Hz 400 V)	kW	160	200	315	450	560	705
• At $I_{N\,DC}$ (60 Hz 460 V)	hp	305	385	615	860	1090	1390
• At $I_{H\,DC}$ (60 Hz 460 V)	hp	245	305	485	690	860	1090
DC link current							
• Rated current $I_{N\,DC}$	A	420	530	820	1200	1500	1880
• Base-load current $I_{H\,DC}$ [1]	A	328	413	640	936	1170	1467
• Maximum current $I_{max\,DC}$	A	630	795	1230	1800	2250	2820
Input current							
• Rated current $I_{N\,I}$	A	365	460	710	1010	1265	1630
• Maximum current $I_{max\,I}$	A	547	690	1065	1515	1897	2380
• Max. pre-charging current (max. 3 s)	A	Internal	Internal	Internal	Internal	Internal	308
Current demand							
• 24 V DC auxiliary power supply	A	1.1	1.1	1.1	1.1	1.1	1.1
DC link capacitance							
• Basic Line Module	µF	7200	9600	14600	23200	29000	34800
• Drive line-up, max.	µF	57600	76800	116800	185600	232000	139200/278400[2]
Power loss, max. [3]							
• At 50 Hz 400 V	kW	1.9	2.1	3.2	4.6	5.5	6.9
• At 60 Hz 460 V	kW	1.9	2.1	3.2	4.6	5.5	6.9
Cooling air requirement	m^3/s (ft^3/s)	0.17 (6.00)	0.17 (6.00)	0.17 (6.00)	0.36 (12.7)	0.36 (12.7)	0.36 (12.7)
Sound pressure level L_{pA} (1 m) at 50/60 Hz	dB	66/68	66/68	66/68	71/73	71/73	71/73
Line connection U1, V1, W1		Flat connector for M10 screw	Flat connector for M10 screw	Flat connector for M10 screw	Flat connector for M12 screw	Flat connector for M12 screw	Flat connector for M12 screw
• Conductor cross-section, max. (IEC)	mm^2	2 × 240	2 × 240	2 × 240	6 × 185	6 × 185	6 × 185
DC link connection DCP, DCN		M10 screw	M10 screw	M10 screw	3 × hole for M12	3 × hole for M12	3 × hole for M12
• Conductor cross-section, max. (IEC)	mm^2	2 × 240	2 × 240	2 × 240	6 × 185	6 × 185	6 × 185
PE/GND connection		2 × hole for M10	2 × hole for M10	2 × hole for M10	2 × hole for M12	2 × hole for M12	2 × hole for M12
• Conductor cross-section, max. (IEC)	mm^2	2 × 240	2 × 240	2 × 240	4 × 240	4 × 240	4 × 240
Cable length, max. [4]							
• Shielded	m (ft)	2600 (8530)	2600 (8530)	2600 (8530)	4000 (13123)	4000 (13123)	4800 (15748)
• Unshielded	m (ft)	3900 (12795)	3900 (12795)	3900 (12795)	6000 (19685)	6000 (19685)	7200 (23622)
Degree of protection		IP00	IP00	IP00	IP00	IP00	IP00
Dimensions							
• Width	mm (in)	310 (12.2)	310 (12.2)	310 (12.2)	310 (12.2)	310 (12.2)	310 (12.2)
• Height	mm (in)	1164 (45.8)	1164 (45.8)	1164 (45.8)	1653 (65.1)	1653 (65.1)	1653 (65.1)
• Depth	mm (in)	352 (13.9)	352 (13.9)	352 (13.9)	550 (21.7)	550 (21.7)	550 (21.7)
Weight, approx.	kg (lb)	96 (212)	96 (212)	96 (212)	214 (472)	214 (472)	214 (472)
Frame size		FB	FB	FB	GB	GB	GD
Minimum short-circuit current [5]	kA	4.4	5.2	10	12.4	18.4	18.6

[1] The base-load current $I_{H\,DC}$ is the basis for a duty cycle of 150 % for 60 s or $I_{max\,DC}$ for 5 s with a duty cycle duration of 300 s.

[2] The first value applies for one precharging resistor for each phase, the second value for two precharging resistors connected in parallel for each phase.

[3] The specified power loss represents the maximum value at 100 % utilization. The value is lower under normal operating conditions.

[4] Total of all motor cables and DC link. Longer cable lengths for specific configurations are available on request.
For additional information, please refer to the SINAMICS Low Voltage Engineering Manual.

[5] Current required for reliably triggering protective devices.

© Siemens 2024

Technical specifications

Line voltage 500 ... 690 V 3 AC		Basic Line Modules					
		6SL3330-1TG33-0AA3	6SL3330-1TG34-3AA3	6SL3330-1TG36-8AA3	6SL3330-1TG41-1AA3	6SL3330-1TG41-4AA3	6SL3330-1TG41-8AA3
Rated power							
• At $I_{N\,DC}$ (50 Hz 690 V)	kW	**250**	**355**	**560**	**900**	**1100**	**1500**
• At $I_{H\,DC}$ (50 Hz 690 V)	kW	195	280	440	710	910	1220
• At $I_{N\,DC}$ (50 Hz 500 V)	kW	175	250	390	635	810	1085
• At $I_{H\,DC}$ (50 Hz 500 V)	kW	165	235	365	595	755	1015
• At $I_{N\,DC}$ (60 Hz 575 V)	hp	250	350	600	900	1250	1500
• At $I_{H\,DC}$ (60 Hz 575 V)	hp	200	300	450	800	1000	1250
DC link current							
• Rated current $I_{N\,DC}$	A	300	430	680	1100	1400	1880
• Base-load current $I_{H\,DC}$ [1]	A	234	335	530	858	1092	1467
• Maximum current $I_{max\,DC}$	A	450	645	1020	1650	2100	2820
Input current							
• Rated current $I_{N\,I}$	A	260	375	575	925	1180	1580
• Maximum current $I_{max\,I}$	A	390	563	863	1388	1770	2370
• Max. pre-charging current (max. 3 s)	A	Internal	Internal	Internal	Internal	Internal	234
Current demand							
• 24 V DC auxiliary power supply	A	1.1	1.1	1.1	1.1	1.1	1.1
DC link capacitance							
• Basic Line Module	µF	3200	4800	7300	11600	15470	19500
• Drive line-up, max.	µF	25600	38400	58400	92800	123760	78000/156000 [2]
Power loss, max. [3]							
• At 50 Hz 690 V	kW	1.5	2.1	3.0	5.4	5.8	7.3
• At 60 Hz 575 V	kW	1.5	2.1	3.0	5.4	5.8	7.3
Cooling air requirement	m^3/s (ft^3/s)	0.17 (6.00)	0.17 (6.00)	0.17 (6.00)	0.36 (12.7)	0.36 (12.7)	0.36 (12.7)
Sound pressure level L_{pA} (1 m) at 50/60 Hz	dB	66/68	66/68	66/68	71/73	71/73	71/73
Line connection U1, V1, W1		Flat connector for M10 screw	Flat connector for M10 screw	Flat connector for M10 screw	Flat connector for M12 screw	Flat connector for M12 screw	Flat connector for M12 screw
• Conductor cross-section, max. (IEC)	mm^2	2 × 240	2 × 240	2 × 240	6 × 185	6 × 185	6 × 185
DC link connection DCP, DCN		M10 screw	M10 screw	M10 screw	3 × hole for M12	3 × hole for M12	3 × hole for M12
• Conductor cross-section, max. (IEC)	mm^2	2 × 240	2 × 240	2 × 240	6 ×185	6 × 185	6 × 185
PE/GND connection		2 × hole for M10	2 × hole for M10	2 × hole for M10	2 × hole for M12	2 × hole for M12	2 × hole for M12
• Conductor cross-section, max. (IEC)	mm^2	2 × 240	2 × 240	2 × 240	4 × 240	4 × 240	4 × 240
Cable length, max. [4]							
• Shielded	m (ft)	1500 (4921)	1500 (4921)	1500 (4921)	2250 (7382)	2250 (7382)	2750 (9022)
• Unshielded	m (ft)	2250 (7382)	2250 (7382)	2250 (7382)	3375 (11073)	3375 (11073)	4125 (13533)
Degree of protection		IP00	IP00	IP00	IP00	IP00	IP00
Dimensions							
• Width	mm (in)	310 (12.2)	310 (12.2)	310 (12.2)	310 (12.2)	310 (12.2)	310 (12.2)
• Height	mm (in)	1164 (45.8)	1164 (45.8)	1164 (45.8)	1653 (65.1)	1653 (65.1)	1653 (65.1)
• Depth	mm (in)	352 (13.9)	352 (13.9)	352 (13.9)	550 (21.7)	550 (21.7)	550 (21.7)
Weight, approx.	kg (lb)	96 (212)	96 (212)	96 (212)	214 (472)	214 (472)	214 (472)
Frame size		FB	FB	FB	GB	GB	GD
Minimum short-circuit current [5]	kA	3	4.4	8	10.4	16	18.6

1) The base-load current $I_{H\,DC}$ is the basis for a duty cycle of 150 % for 60 s or $I_{max\,DC}$ for 5 s with a duty cycle duration of 300 s.

2) The first value applies for one precharging resistor for each phase, the second value for two precharging resistors connected in parallel for each phase.

3) The specified power loss represents the maximum value at 100 % utilization. The value is lower under normal operating conditions.

4) Total of all motor cables and DC link. Longer cable lengths for specific configurations are available on request.
For additional information, please refer to the SINAMICS Low Voltage Engineering Manual.

5) Current required for reliably triggering protective devices.

© Siemens 2024

3

Overview

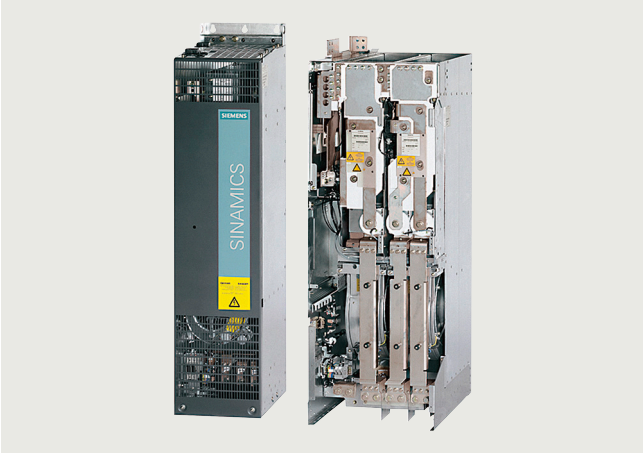

Smart Line Modules are infeed/regenerative feedback units that supply power to connected Motor Modules. Furthermore, they are capable of feeding regenerative energy back into the grid. The infeed occurs over a diode jumper, while stable, line-commutated regenerative feedback takes place via IGBTs with 100 % continuous energy regeneration. The regenerative capability of the modules can be deactivated by means of parameterization. An integrated Voltage Sensing Module VSM10 is used for sensing the line voltage for regenerative feedback.

Smart Line Modules are designed for connection to grounded TN/TT and non-grounded IT supply systems.

The DC link is pre-charged by means of integrated pre-charging resistors.

To operate the Smart Line Module, the associated line reactor or a suitable transformer is required.

Design

The Smart Line Modules have the following interfaces as standard:

- 1 line supply connection
- 1 connection for the 24 V DC electronics power supply
- 1 DC link connection (DCP, DCN) for supplying the connected Motor Modules
- 1 DC link connection (DCPA, DCNA) for connecting a Braking Module
- 3 DRIVE-CLiQ sockets
- 1 temperature sensor input for KTY84-130, Pt1000, PTC or Pt100 (Pt1000 can be used from firmware V4.7 HF17 and higher)
- 1 PE/protective conductor connection (2 connections for sizes HX and 3 connections for size JX)

The status of the Smart Line Modules is indicated via three LEDs.

The scope of supply of the Smart Line Modules includes:

- DRIVE-CLiQ cable to connect to a Control Unit
- DRIVE-CLiQ cable for connection between the Control Unit and first Motor Module (type dependent)
- 1 set of warning labels in 30 languages (BG, CN, CZ, DE, DK, EE, ES, FI, FR, GB, GR, HU, IE, IS, IT, JP, KR, LT, LV, MT, NL, NO, PL, PT, RO, RU, SE, SI, SK, TR)

Selection and ordering data

Rated power at 400 V or 690 V	Infeed/regenerative feedback current	**Smart Line Module**
kW	A	Article No.
Line voltage 380 ... 480 V 3 AC		
250	463	**6SL3330-6TE35-5AA3**
355	614	**6SL3330-6TE37-3AA3**
500	883	**6SL3330-6TE41-1AA3**
630	1093	**6SL3330-6TE41-3AA3**
800	1430	**6SL3330-6TE41-7AA3**
Line voltage 500 ... 690 V 3 AC		
450	463	**6SL3330-6TG35-5AA3**
710	757	**6SL3330-6TG38-8AA3**
1000	1009	**6SL3330-6TG41-2AA3**
1400	1430	**6SL3330-6TG41-7AA3**

Extension of warranty

Siemens offers for SINAMICS S120 chassis units an extension of warranty/Service Protect up to 6½ years.

Details can be found in chapter Services and Documentation

Accessories for re-ordering

Description	Article No.
Dust protection blanking plugs (50 units) For DRIVE-CLiQ port	**6SL3066-4CA00-0AA0**

For line-side components, Braking Modules, and recommended system components, see System components.

© Siemens 2024

Integration

The Smart Line Modules communicate with the higher-level control module via DRIVE-CLiQ. The control module in this case can be a CU320-2 or a SIMOTION D Control Unit. An external 24 V DC power supply is required to operate the Smart Line Modules.

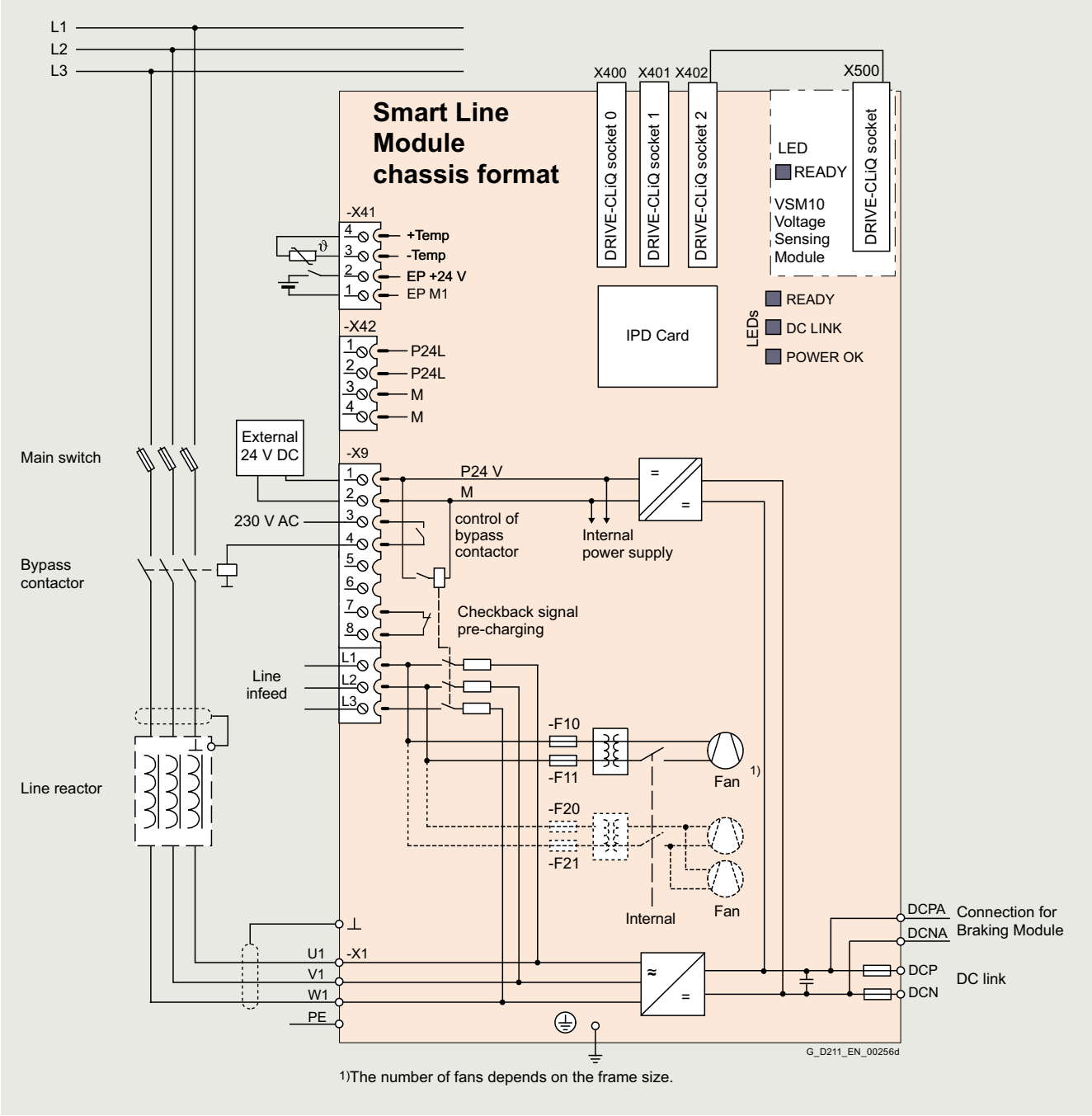

1)The number of fans depends on the frame size.

Connection example of a Smart Line Module

© Siemens 2024

Technical specifications

General technical specifications

Electrical specifications	
Line power factor at rated power	
• Basic fundamental (cos φ_1)	>0.96
• Total (λ)	0.75 ... 0.93
Efficiency	>98.5 %
DC link voltage, approx. [1]	1.32 × line voltage under partial load 1.30 × line voltage under full load
Main contactor control	
• Terminal strip -X9/5-6	240 V AC, max. 8 A 30 V DC, max. 1 A

[1] The DC link voltage is unregulated and load-dependent.
For additional information, please refer to the SINAMICS Low Voltage Engineering Manual.

© Siemens 2024

Technical specifications

Line voltage 380 ... 480 V 3 AC		Smart Line Modules				
		6SL3330-6TE35-5AA3	6SL3330-6TE37-3AA3	6SL3330-6TE41-1AA3	6SL3330-6TE41-3AA3	6SL3330-6TE41-7AA3
Rated power						
• At $I_{N\,DC}$ (50 Hz 400 V)	kW	**250**	**355**	**500**	**630**	**800**
• At $I_{H\,DC}$ (50 Hz 400 V)	kW	235	315	450	555	730
• At $I_{N\,DC}$ (60 Hz 460 V)	hp	385	545	770	970	1230
• At $I_{H\,DC}$ (60 Hz 460 V)	hp	360	485	695	855	1125
DC link current						
• Rated current $I_{N\,DC}$	A	550	730	1050	1300	1700
• Base-load current $I_{H\,DC}$ [1]	A	490	650	934	1157	1513
• Maximum current $I_{max\,DC}$	A	825	1095	1575	1950	2550
Infeed/regenerative feedback current						
• Rated current $I_{N\,I}$	A	463	614	883	1093	1430
• Maximum current $I_{max\,I}$	A	694	921	1324	1639	2145
Current demand						
• 24 V DC auxiliary power supply	A	1.35	1.35	1.4	1.5	1.7
• 400 V AC	A	1.8	1.8	3.6	5.4	5.4
DC link capacitance						
• Smart Line Module	µF	8400	12000	16800	18900	28800
• Drive line-up, max.	µF	42000	60000	67200	75600	115200
Power loss, max. [2]						
• At 50 Hz 400 V	kW	3.7	4.7	7.1	11.0	11.5
• At 60 Hz 460 V	kW	3.7	4.7	7.1	11.0	11.5
Cooling air requirement	m^3/s (ft^3/s)	0.36 (12.7)	0.36 (12.7)	0.78 (27.5)	1.08 (38.1)	1.08 (38.1)
Sound pressure level L_{pA} (1 m) at 50/60 Hz	dB	69/73	69/73	70/73	70/73	70/73
Line connection U1, V1, W1		Flat connector for M10 screw	Flat connector for M10 screw	Flat connector for M12 screw	Flat connector for M12 screw	Flat connector for M12 screw
• Conductor cross-section, max. (IEC)	mm^2	2 × 240	2 × 240	4 × 240	6 × 240	6 × 240
DC link connection DCP, DCN		M10 screw	M10 screw	4 × hole for M12	4 × hole for M12	4 × hole for M12
• Conductor cross-section, max. (IEC)	mm^2	2 × 240	2 × 240	Busbar	Busbar	Busbar
PE/GND connection		Hole for M10	Hole for M10	–	–	–
• Conductor cross-section, max. (IEC)	mm^2	2 × 240	2 × 240	–	–	–
PE1/GND connection		–	–	M12 screw	M12 screw	M12 screw
• Conductor cross-section, max. (IEC)	mm^2	–	–	240	240	240
PE2/GND connection		–	–	2 × M12 screw	3 × M12 screw	3 × M12 screw
• Conductor cross-section, max. (IEC)	mm^2	–	–	2 × 240	3 × 240	3 × 240
Cable length, max. [3]						
• Shielded	m (ft)	4000 (13123)	4000 (13123)	4800 (15748)	4800 (15748)	4800 (15748)
• Unshielded	m (ft)	6000 (19685)	6000 (19685)	7200 (23622)	7200 (23622)	7200 (23622)
Degree of protection		IP00	IP00	IP00	IP00	IP00
Dimensions						
• Width	mm (in)	310 (12.2)	310 (12.2)	503 (19.8)	704 (27.7)	704 (27.7)
• Height	mm (in)	1413 (55.6)	1413 (55.6)	1475 (58.1)	1480 (58.3)	1480 (58.3)
• Depth	mm (in)	550 (21.7)	550 (21.7)	548 (21.6)	550 (21.7)	550 (21.7)
Weight, approx.	kg (lb)	150 (331)	150 (331)	294 (648)	458 (1010)	458 (1010)
Frame size		GX	GX	HX	JX	JX
Minimum short-circuit current [4]	kA	6.2	9.2	10.4	16	21

[1] The base-load current $I_{H\,DC}$ is the basis for a duty cycle of 150 % for 60 s or $I_{max\,DC}$ for 5 s with a duty cycle duration of 300 s.

[2] The specified power loss represents the maximum value at 100 % utilization. The value is lower under normal operating conditions.

[3] Total of all motor cables and DC link. Longer cable lengths for specific configurations are available on request.
For additional information, please refer to the SINAMICS Low Voltage Engineering Manual.

[4] Current required for reliably triggering protective devices.

© Siemens 2024

Technical specifications

Line voltage 500 ... 690 V 3 AC		Smart Line Modules			
		6SL3330-6TG35-5AA3	6SL3330-6TG38-8AA3	6SL3330-6TG41-2AA3	6SL3330-6TG41-7AA3
Rated power					
• At $I_{N\,DC}$ (50 Hz 690 V)	kW	**450**	**710**	**1000**	**1400**
• At $I_{H\,DC}$ (50 Hz 690 V)	kW	405	665	885	1255
• At $I_{N\,DC}$ (50 Hz 500 V)	kW	320	525	705	995
• At $I_{H\,DC}$ (50 Hz 500 V)	kW	295	480	640	910
• At $I_{N\,DC}$ (60 Hz 575 V)	hp	500	790	1115	1465
• At $I_{H\,DC}$ (60 Hz 575 V)	hp	450	740	990	1400
DC link current					
• Rated current $I_{N\,DC}$	A	550	900	1200	1700
• Base-load current $I_{H\,DC}$ [1]	A	490	800	1068	1513
• Maximum current $I_{max\,DC}$	A	825	1350	1800	2550
Infeed/regenerative feedback current					
• Rated current $I_{N\,I}$	A	463	757	1009	1430
• Maximum current $I_{max\,I}$	A	694	1135	1513	2145
Current demand					
• 24 V DC auxiliary power supply	A	1.35	1.4	1.5	1.7
• 500 V AC	A	1.3	2.9	4.3	4.3
• 690 V AC	A	0.94	2.1	3.1	3.1
DC link capacitance					
• Smart Line Module	µF	5600	7400	11100	14400
• Drive line-up, max.	µF	28000	29600	44400	57600
Power loss, max. [2]					
• At 50 Hz 690 V	kW	4.3	6.5	12.0	13.8
• At 60 Hz 575 V	kW	4.3	6.5	12.0	13.8
Cooling air requirement	m^3/s (ft^3/s)	0.36 (12.7)	0.78 (27.5)	1.08 (38.1)	1.08 (38.1)
Sound pressure level L_{pA} (1 m) at 50/60 Hz	dB	69/73	70/73	70/73	70/73
Line connection U1, V1, W1		Flat connector for M10 screw	Flat connector for M12 screw	Flat connector for M12 screw	Flat connector for M12 screw
• Conductor cross-section, max. (IEC)	mm^2	2 × 240	4 × 240	6 × 240	6 × 240
DC link connection DCP, DCN		M10 screw	4 × hole for M12	4 × hole for M12	4 × hole for M12
• Conductor cross-section, max. (IEC)	mm^2	2 × 240	Busbar	Busbar	Busbar
PE connection		Hole for M10	–	–	–
• Conductor cross-section, max. (IEC)	mm^2	2 × 240	–	–	–
PE1/GND connection		–	M12 screw	M12 screw	M12 screw
• Conductor cross-section, max. (IEC)	mm^2	–	240	240	240
PE2/GND connection		–	2 × M12 screw	3 × M12 screw	3 × M12 screw
• Conductor cross-section, max. (IEC)	mm^2	–	2 × 240	3 × 240	3 × 240
Cable length, max. [3]					
• Shielded	m (ft)	2250 (7382)	2750 (9022)	2750 (9022)	2750 (9022)
• Unshielded	m (ft)	3375 (11073)	4125 (13533)	4125 (13533)	4125 (13533)
Degree of protection		IP00	IP00	IP00	IP00
Dimensions					
• Width	mm (in)	310 (12.2)	503 (19.8)	704 (27.7)	704 (27.7)
• Height	mm (in)	1413 (55.6)	1475 (58.1)	1480 (58.3)	1480 (58.3)
• Depth	mm (in)	550 (21.7)	548 (21.6)	550 (21.7)	550 (21.7)
Weight, approx.	kg (lb)	150 (331)	294 (648)	458 (1010)	458 (1010)
Frame size		GX	HX	JX	JX
Minimum short-circuit current [4]	kA	6.2	10.5	12.4	21

[1] The base-load current $I_{H\,DC}$ is the basis for a duty cycle of 150 % for 60 s or $I_{max\,DC}$ for 5 s with a duty cycle duration of 300 s.

[2] The specified power loss represents the maximum value at 100 % utilization. The value is lower under normal operating conditions.

[3] Total of all motor cables and DC link. Longer cable lengths for specific configurations are available on request.
For additional information, please refer to the SINAMICS Low Voltage Engineering Manual.

[4] Current required for reliably triggering protective devices.

© Siemens 2024

Overview

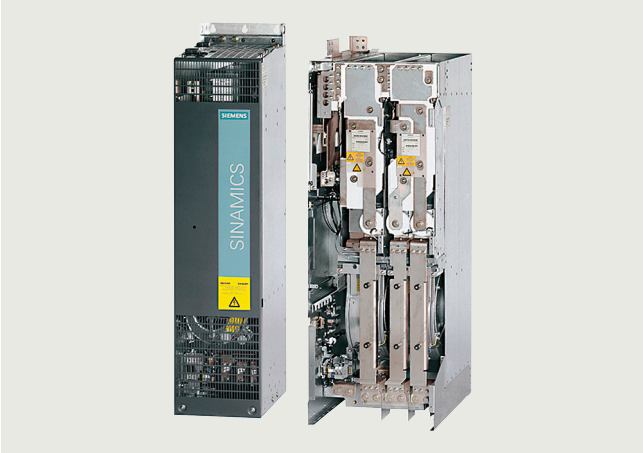

The self-commutated infeed/regenerative feedback units with IGBTs generate a regulated DC link voltage. This means that the connected Motor Modules are decoupled from the line voltage. Line voltage fluctuations within the permissible supply tolerances have no effect on the motor voltage.

If required, the Active Line Modules can also provide reactive power compensation.

Active Line Modules are designed for connection to grounded TN/TT and non-grounded IT supply systems.

Active Line Modules are always operated together with the associated Active Interface Modules. These include the necessary pre-charging circuit as well as a Clean Power Filter.

Design

The Active Line Modules have the following interfaces as standard:

- 1 line supply connection
- 1 connection for the 24 V DC electronics power supply
- 1 DC link connection (DCP, DCN) for supplying the connected Motor Modules
- 1 DC link connection (DCPA, DCNA) for connecting a Braking Module
- 3 DRIVE-CLiQ sockets
- 1 temperature sensor input for KTY84-130, Pt1000, PTC or Pt100 (Pt1000 can be used from firmware V4.7 HF17 and higher)
- 2 PE/protective conductor connections

The status of the Active Line Modules is indicated via three LEDs.

The scope of supply of the Active Line Modules includes:

- DRIVE-CLiQ cable to connect to a Control Unit
- DRIVE-CLiQ cable to connect the Control Unit to the first Motor Module
- 1 set of warning labels in 30 languages (BG, CN, CZ, DE, DK, EE, ES, FI, FR, GB, GR, HU, IE, IS, IT, JP, KR, LT, LV, MT, NL, NO, PL, PT, RO, RU, SE, SI, SK, TR)

Selection and ordering data

Rated power at 400 V or 690 V	Rated infeed/ regenerative feedback current	**Active Line Module**
kW	A	Article No.
Line voltage 380 ... 480 V 3 AC		
132	210	**6SL3330-7TE32-1AA3**
160	260	**6SL3330-7TE32-6AA3**
235	380	**6SL3330-7TE33-8AA3**
300	490	**6SL3330-7TE35-0AA3**
380	605	**6SL3330-7TE36-1AA3**
450	745	**6SL3330-7TE37-5AA3**
500	840	**6SL3330-7TE38-4AA3**
630	985	**6SL3330-7TE41-0AA3**
800	1260	**6SL3330-7TE41-2AA3**
900	1405	**6SL3330-7TE41-4AA3**
Line voltage 500 ... 690 V 3 AC		
630	575	**6SL3330-7TG35-8AA3**
800	735	**6SL3330-7TG37-4AA3**
1100	1025	**6SL3330-7TG41-0AA3**
1400	1270	**6SL3330-7TG41-3AA3**

Extension of warranty

Siemens offers for SINAMICS S120 chassis units an extension of warranty/Service Protect up to 6½ years.

Details can be found in chapter Services and Documentation

Accessories for re-ordering

Description	Article No.
Dust protection blanking plugs (50 units) For DRIVE-CLiQ port	**6SL3066-4CA00-0AA0**

For line-side components, Braking Modules, and recommended system components, see System components.

© Siemens 2024

Integration

The Active Line Modules communicate with the higher-level control module via DRIVE-CLiQ. This control module can be:

- A CU320-2 Control Unit
- A SIMOTION D Control Unit
- A SINUMERIK 840D sl
- A SINUMERIK ONE

An external 24 V DC power supply is required to operate the Active Line Modules.

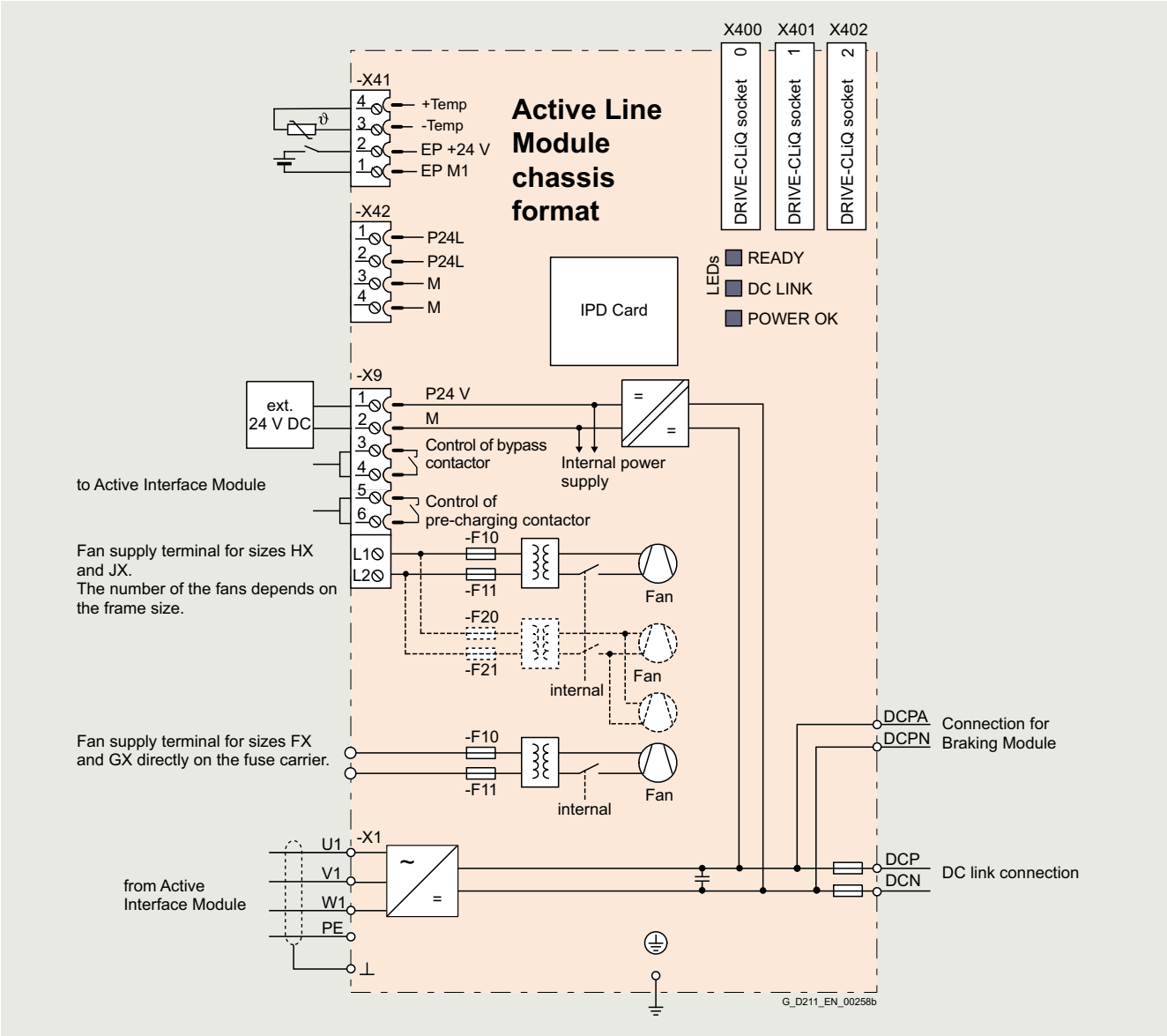

Connection example of an Active Line Module

© Siemens 2024

Technical specifications

General technical specifications

Electrical specifications	
Line power factor	
• Basic fundamental (cos φ_1)	1 (factory setting), can be altered by inputting a reactive current setpoint
• Total (λ)	1 (factory setting)
Efficiency	>97.5 % (including Active Interface Module)
DC link voltage	The DC link voltage is regulated and can be adjusted as a voltage decoupled from the line voltage. Factory setting of the DC link voltage: 1.5 × line voltage
Radio interference suppression	
• Standard (Active Line Module with Active Interface Module)	Category C3 acc. to EN 61800-3
• With line filter	Category C2 acc. to EN 61800-3

© Siemens 2024

Technical specifications

Line voltage 380 ... 480 V 3 AC		Active Line Modules				
		6SL3330-7TE32-1AA3	6SL3330-7TE32-6AA3	6SL3330-7TE33-8AA3	6SL3330-7TE35-0AA3	6SL3330-7TE36-1AA3
Rated power						
• At $I_{N\,DC}$ (50 Hz 400 V)	kW	**132**	**160**	**235**	**300**	**380**
• At $I_{H\,DC}$ (50 Hz 400 V)	kW	115	145	210	270	335
• At $I_{N\,DC}$ (60 Hz 460 V)	hp	200	250	400	500	600
• At $I_{H\,DC}$ (60 Hz 460 V)	hp	150	200	300	400	500
DC link current						
• Rated current $I_{N\,DC}$	A	235	291	425	549	678
• Base-load current $I_{H\,DC}$ [1]	A	209	259	378	489	603
• Maximum current $I_{max\,DC}$	A	352	436	637	823	1017
Infeed/regenerative feedback current						
• Rated current $I_{N\,I}$	A	210	260	380	490	605
• Maximum current $I_{max\,I}$	A	315	390	570	735	907
Current demand						
• 24 V DC auxiliary power supply	A	1.1	1.1	1.35	1.35	1.4
• 400 V AC	A	0.63	1.13	1.8	1.8	3.6
DC link capacitance						
• Active Line Module	µF	4200	5200	7800	9600	12600
• Drive line-up, max.	µF	41600	41600	76800	76800	134400
Power loss, max. [2]						
• At 50 Hz 400 V	kW	2.2	2.7	3.9	4.8	6.2
• At 60 Hz 460 V	kW	2.3	2.9	4.2	5.1	6.6
Cooling air requirement	m^3/s (ft^3/s)	0.17 (6.00)	0.23 (8.12)	0.36 (12.7)	0.36 (12.7)	0.78 (27.5)
Sound pressure level L_{pA} [3] (1 m) at 50/60 Hz	dB	64/67	71/71	69/73	69/73	70/73
Line supply connection U1, V1, W1		Flat connector for M10 screw	Flat connector for M10 screw	Flat connector for M10 screw	Flat connector for M10 screw	Flat connector for M12 screw
• Conductor cross-section, max. (IEC)	mm^2	2 × 185	2 × 185	2 × 240	2 × 240	4 × 240
DC link connection DCP, DCN		M10 screw	M10 screw	M10 screw	M10 screw	4 × hole for M12
• Conductor cross-section, max. (IEC)	mm^2	2 × 185	2 × 185	2 × 240	2 × 240	Busbar
PE1/GND connection		M10 screw	M10 screw	M10 screw	M10 screw	M12 screw
• Conductor cross-section, max. (IEC)	mm^2	2 × 185	2 × 185	2 × 240	2 × 240	240
PE2/GND connection		M10 screw	M10 screw	M10 screw	M10 screw	2 × M12 screw
• Conductor cross-section, max. (IEC)	mm^2	2 × 185	2 × 185	2 × 240	2 × 240	2 × 240
Cable length, max. [4]						
• Shielded	m (ft)	2700 (8858)	2700 (8858)	2700 (8858)	2700 (8858)	3900 (12795)
• Unshielded	m (ft)	4050 (13287)	4050 (13287)	4050 (13287)	4050 (13287)	5850 (19193)
Degree of protection		IP20	IP20	IP20	IP20	IP00
Dimensions						
• Width	mm (in)	326 (12.8)	326 (12.8)	326 (12.8)	326 (12.8)	503 (19.8)
• Height	mm (in)	1400 (55.1)	1400 (55.1)	1533 (60.4)	1533 (60.4)	1475 (58.1)
• Depth	mm (in)	356 (14.0)	356 (14.0)	545 (21.5)	545 (21.5)	540 (21.3)
Weight, approx.	kg (lb)	95 (209)	95 (209)	136 (300)	136 (300)	290 (639)
Frame size		FX	FX	GX	GX	HX
Minimum short-circuit current [5]	kA	6.2	10.5	10.5	8	9.2

[1] The base-load current $I_{H\,DC}$ is the basis for a duty cycle of 150 % for 60 s or $I_{max\,DC}$ for 5 s with a duty cycle duration of 300 s.

[2] The specified power loss represents the maximum value at 100 % utilization. The value is lower under normal operating conditions.

[3] Total sound pressure level of Active Interface Module and Active Line Module.

[4] Total of all motor cables and DC link. Longer cable lengths for specific configurations are available on request.
For additional information, please refer to the SINAMICS Low Voltage Engineering Manual.

[5] Current required for reliably triggering protective devices.

© Siemens 2024

Technical specifications

Line voltage 380 ... 480 V 3 AC		Active Line Modules				
		6SL3330-7TE37-5AA3	6SL3330-7TE38-4AA3	6SL3330-7TE41-0AA3	6SL3330-7TE41-2AA3	6SL3330-7TE41-4AA3
Rated power						
• At $I_{N\,DC}$ (50 Hz 400 V)	kW	**450**	**500**	**630**	**800**	**900**
• At $I_{H\,DC}$ (50 Hz 400 V)	kW	400	465	545	690	780
• At $I_{N\,DC}$ (60 Hz 460 V)	hp	600	700	900	1000	1250
• At $I_{H\,DC}$ (60 Hz 460 V)	hp	600	700	800	900	1000
DC link current						
• Rated current $I_{N\,DC}$	A	835	940	1103	1412	1574
• Base-load current $I_{H\,DC}$ [1]	A	700	837	982	1255	1401
• Maximum current $I_{max\,DC}$	A	1252	1410	1654	2120	2361
Infeed/regenerative feedback current						
• Rated current $I_{N\,I}$	A	745	840	985	1260	1405
• Maximum current $I_{max\,I}$	A	1117	1260	1477	1890	2107
Current demand						
• 24 V DC auxiliary power supply	A	1.4	1.4	1.5	1.7	1.7
• 400 V AC	A	3.6	3.6	5.4	5.4	5.4
DC link capacitance						
• Active Line Module	µF	15600	16800	18900	26100	28800
• Drive line-up, max.	µF	134400	134400	230400	230400	230400
Power loss, max. [2]						
• At 50 Hz 400 V	kW	7.3	7.7	10.1	12.1	13.3
• At 60 Hz 460 V	kW	7.7	8.2	10.8	13.0	14.2
Cooling air requirement	m^3/s (ft^3/s)	0.78 (27.5)	0.78 (27.5)	1.08 (38.1)	1.08 (38.1)	1.08 (38.1)
Sound pressure level L_{pA} [3] (1 m) at 50/60 Hz	dB	70/73	70/73	71/73	71/73	71/73
Line supply connection U1, V1, W1		Flat connector for M12 screw	Flat connector for M12 screw	Flat connector for M12 screw	Flat connector for M12 screw	Flat connector for M12 screw
• Conductor cross-section, max. (IEC)	mm^2	4 × 240	4 × 240	6 × 240	6 × 240	6 × 240
DC link connection DCP, DCN		4 × hole for M12	4 × hole for M12	4 × hole for M12	4 × hole for M12	4 × hole for M12
• Conductor cross-section, max. (IEC)	mm^2	Busbar	Busbar	Busbar	Busbar	Busbar
PE1/GND connection		M12 screw	M12 screw	M12 screw	M12 screw	M12 screw
• Conductor cross-section, max. (IEC)	mm^2	240	240	240	240	240
PE2/GND connection		2 × M12 screw	2 × M12 screw	3 × M12 screw	3 × M12 screw	3 × M12 screw
• Conductor cross-section, max. (IEC)	mm^2	2 × 240	2 × 240	3 × 240	3 × 240	3 × 240
Cable length, max. [4]						
• Shielded	m (ft)	3900 (12795)	3900 (12795)	3900 (12795)	3900 (12795)	3900 (12795)
• Unshielded	m (ft)	5850 (19193)	5850 (19193)	5850 (19193)	5850 (19193)	5850 (19193)
Degree of protection		IP00	IP00	IP00	IP00	IP00
Dimensions						
• Width	mm (in)	503 (19.8)	503 (19.8)	704 (27.7)	704 (27.7)	704 (27.7)
• Height	mm (in)	1475 (58.1)	1475 (58.1)	1480 (58.3)	1480 (58.3)	1480 (58.3)
• Depth	mm (in)	540 (21.3)	540 (21.3)	550 (21.7)	550 (21.7)	550 (21.7)
Weight, approx.	kg (lb)	290 (639)	290 (639)	450 (992)	450 (992)	450 (992)
Frame size		HX	HX	JX	JX	JX
Minimum short-circuit current [5]	kA	8.8	10.4	16	21	21

1) The base-load current $I_{H\,DC}$ is the basis for a duty cycle of 150 % for 60 s or $I_{max\,DC}$ for 5 s with a duty cycle duration of 300 s.

2) The specified power loss represents the maximum value at 100 % utilization. The value is lower under normal operating conditions.

3) Total sound pressure level of Active Interface Module and Active Line Module.

4) Total of all motor cables and DC link. Longer cable lengths for specific configurations are available on request.
For additional information, please refer to the SINAMICS Low Voltage Engineering Manual.

5) Current required for reliably triggering protective devices.

© Siemens 2024

Technical specifications

Line voltage 500 ... 690 V 3 AC		Active Line Modules			
		6SL3330-7TG35-8AA3	6SL3330-7TG37-4AA3	6SL3330-7TG41-0AA3	6SL3330-7TG41-3AA3
Rated power					
• At $I_{N\,DC}$ (50 Hz 690 V)	kW	**630**	**800**	**1100**	**1400**
• At $I_{H\,DC}$ (50 Hz 690 V)	kW	620	705	980	1215
• At $I_{N\,DC}$ (50 Hz 500 V)	kW	447	560	780	965
• At $I_{H\,DC}$ (50 Hz 500 V)	kW	450	510	710	880
• At $I_{N\,DC}$ (60 Hz 575 V)	hp	675	900	1250	1500
• At $I_{H\,DC}$ (60 Hz 575 V)	hp	506	600	1000	1250
DC link current					
• Rated current $I_{N\,DC}$	A	644	823	1148	1422
• Base-load current $I_{H\,DC}$ [1]	A	573	732	1022	1266
• Maximum current $I_{max\,DC}$	A	966	1234	1722	2133
Infeed/regenerative feedback current					
• Rated current $I_{N\,I}$	A	575	735	1025	1270
• Maximum current $I_{max\,I}$	A	862	1102	1537	1905
Current demand					
• 24 V DC auxiliary power supply	A	1.4	1.5	1.7	1.7
• 500 V AC	A	3.0	4.4	4.4	4.4
• 690 V AC	A	2.1	3.1	3.1	3.1
DC link capacitance					
• Active Line Module	µF	7400	11100	14400	19200
• Drive line-up, max.	µF	59200	153600	153600	153600
Power loss, max. [2]					
• At 50 Hz 690 V	kW	6.8	10.2	13.6	16.5
• At 60 Hz 575 V	kW	6.2	9.6	12.9	15.3
Cooling air requirement	m^3/s (ft^3/s)	0.78 (27.5)	1.08 (38.1)	1.08 (38.1)	1.08 (38.1)
Sound pressure level L_{pA} [3] (1 m) at 50/60 Hz	dB	70/73	71/73	71/73	71/73
Line supply connection U1, V1, W1		Flat connector for M12 screw	Flat connector for M12 screw	Flat connector for M12 screw	Flat connector for M12 screw
• Conductor cross-section, max. (IEC)	mm^2	4 × 240	6 × 240	6 × 240	6 × 240
DC link connection DCP, DCN		4 × hole for M12	4 × hole for M12	4 × hole for M12	4 × hole for M12
• Conductor cross-section, max. (IEC)	mm^2	Busbar	Busbar	Busbar	Busbar
PE1/GND connection		M12 screw	M12 screw	M12 screw	M12 screw
• Conductor cross-section, max. (IEC)	mm^2	240	240	240	240
PE2/GND connection		2 × M12 screw	3 × M12 screw	3 × M12 screw	3 × M12 screw
• Conductor cross-section, max. (IEC)	mm^2	2 x 240	3 x 240	3 x 240	3 x 240
Cable length, max. [4]					
• Shielded	m (ft)	2250 (7382)	2250 (7382)	2250 (7382)	2250 (7382)
• Unshielded	m (ft)	3375 (11073)	3375 (11073)	3375 (11073)	3375 (11073)
Degree of protection		IP00	IP00	IP00	IP00
Dimensions					
• Width	mm (in)	503 (19.8)	704 (27.7)	704 (27.7)	704 (27.7)
• Height	mm (in)	1475 (58.1)	1480 (58.3)	1480 (58.3)	1480 (58.3)
• Depth	mm (in)	540 (21.3)	550 (21.7)	550 (21.7)	550 (21.7)
Weight, approx.	kg (lb)	290 (639)	450 (992)	450 (992)	450 (992)
Frame size		HX	JX	JX	JX
Minimum short-circuit current [5]	kA	8.4	10.5	16	20

1) The base-load current $I_{H\,DC}$ is the basis for a duty cycle of 150 % for 60 s or $I_{max\,DC}$ for 5 s with a duty cycle duration of 300 s.

2) The specified power loss represents the maximum value at 100 % utilization. The value is lower under normal operating conditions.

3) Total sound pressure level of Active Interface Module and Active Line Module.

4) Total of all motor cables and DC link. Longer cable lengths for specific configurations are available on request.
For additional information, please refer to the SINAMICS Low Voltage Engineering Manual.

5) Current required for reliably triggering protective devices.

© Siemens 2024

Overview

Active Interface Modules are used in conjunction with Active Line Modules. Active Interface Modules contain a Clean Power Filter with basic RI suppression, the pre-charging circuit for the Active Line Module, the line voltage sensing circuit and monitoring sensors. The bypass contactor is an integral component in frame sizes FI and GI, This ensures a highly compact design. The bypass contactor must be provided separately for frame sizes HI and JI.

Line harmonics are largely suppressed by the Clean Power Filter.

Design

Active Interface Modules have the following interfaces as standard:

- 1 line supply connection
- 1 load connection
- 1 connection for the 24 V DC electronics power supply
- 1 connection for the external 230 V AC supply (fan power supply)
- 1 DRIVE-CLiQ socket (on VSM10 Voltage Sensing Module)
- 1 connection for pre-charging circuit, frame sizes HI and JI
- 1 PE/protective conductor connection

The scope of supply of the Active Interface Modules includes:

- DRIVE-CLiQ cable for the connection between Active Interface Module and Active Line Module
- 1 set of warning labels in 30 languages (BG, CN, CZ, DE, DK, EE, ES, FI, FR, GB, GR, HU, IE, IS, IT, JP, KR, LT, LV, MT, NL, NO, PL, PT, RO, RU, SE, SI, SK, TR)

Selection and ordering data

Suitable for Active Line Module in chassis format, air-cooled	Rated power of the Active Line Modules at 400 V or 690 V	**Active Interface Module**
	kW	Article No.
Line voltage 380 ... 480 V 3 AC		
6SL3330-7TE32-1AA3	132	**6SL3300-7TE32-6AA1**
6SL3330-7TE32-6AA3	160	**6SL3300-7TE32-6AA1**
6SL3330-7TE33-8AA3	235	**6SL3300-7TE33-8AA1**
6SL3330-7TE35-0AA3	300	**6SL3300-7TE35-0AA1**
6SL3330-7TE36-1AA3	380	**6SL3300-7TE38-4AA1**
6SL3330-7TE37-5AA3	450	**6SL3300-7TE38-4AA1**
6SL3330-7TE38-4AA3	500	**6SL3300-7TE38-4AA1**
6SL3330-7TE41-0AA3	630	**6SL3300-7TE41-4AA1**
6SL3330-7TE41-2AA3	800	**6SL3300-7TE41-4AA1**
6SL3330-7TE41-4AA3	900	**6SL3300-7TE41-4AA1**
Line voltage 500 ... 690 V 3 AC		
6SL3330-7TG35-8AA3	630	**6SL3300-7TG35-8AA1**
6SL3330-7TG37-4AA3	800	**6SL3300-7TG37-4AA1**
6SL3330-7TG41-0AA3	1100	**6SL3300-7TG41-3AA1**
6SL3330-7TG41-3AA3	1400	**6SL3300-7TG41-3AA1**

Extension of warranty

Siemens offers for SINAMICS S120 chassis units an extension of warranty/Service Protect up to 6½ years.

Details can be found in chapter
Services and Documentation

© Siemens 2024

Integration

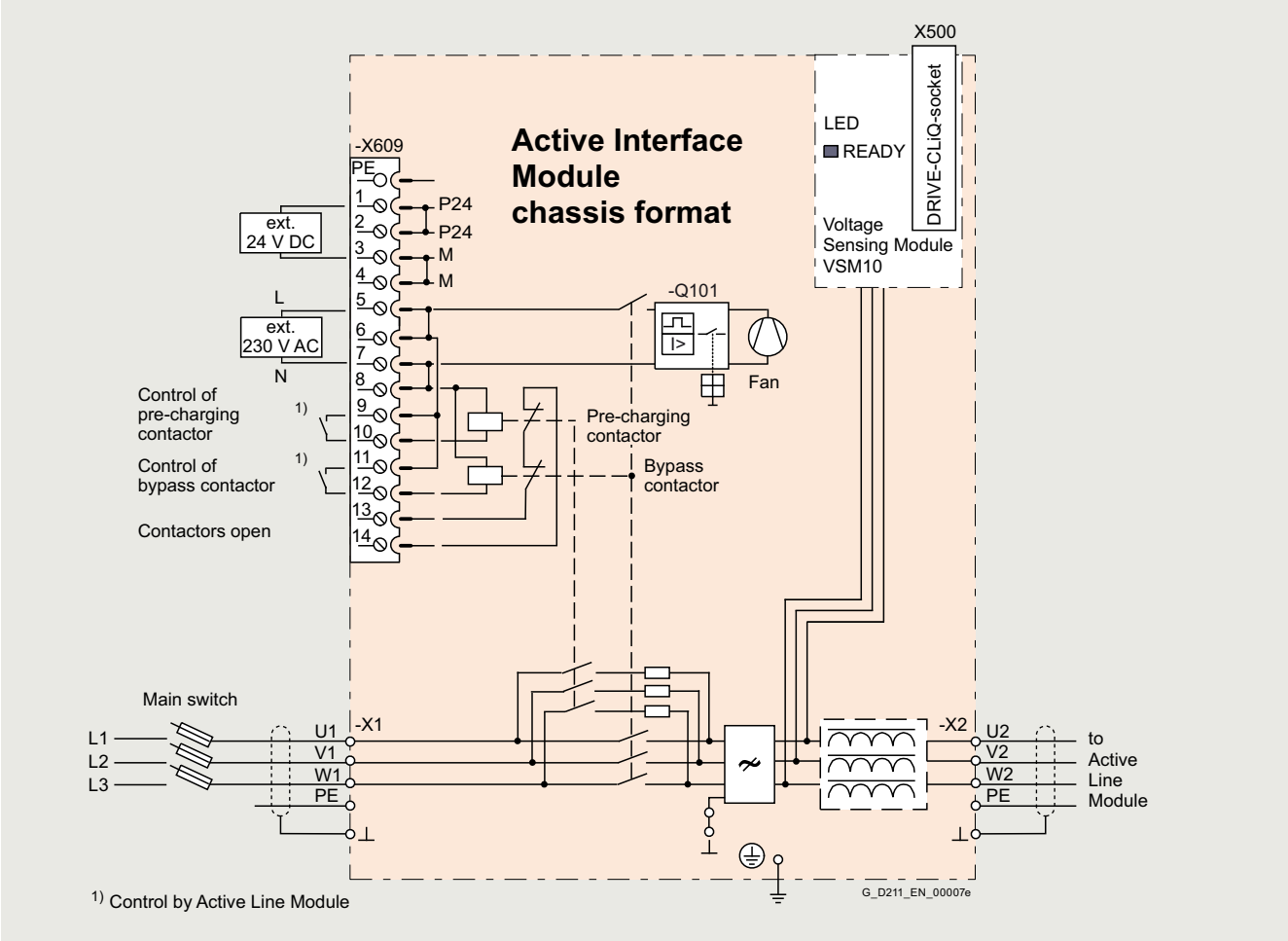

Connection example of an Active Interface Module with integrated bypass contactor (frame sizes FI and GI)

© Siemens 2024

Integration

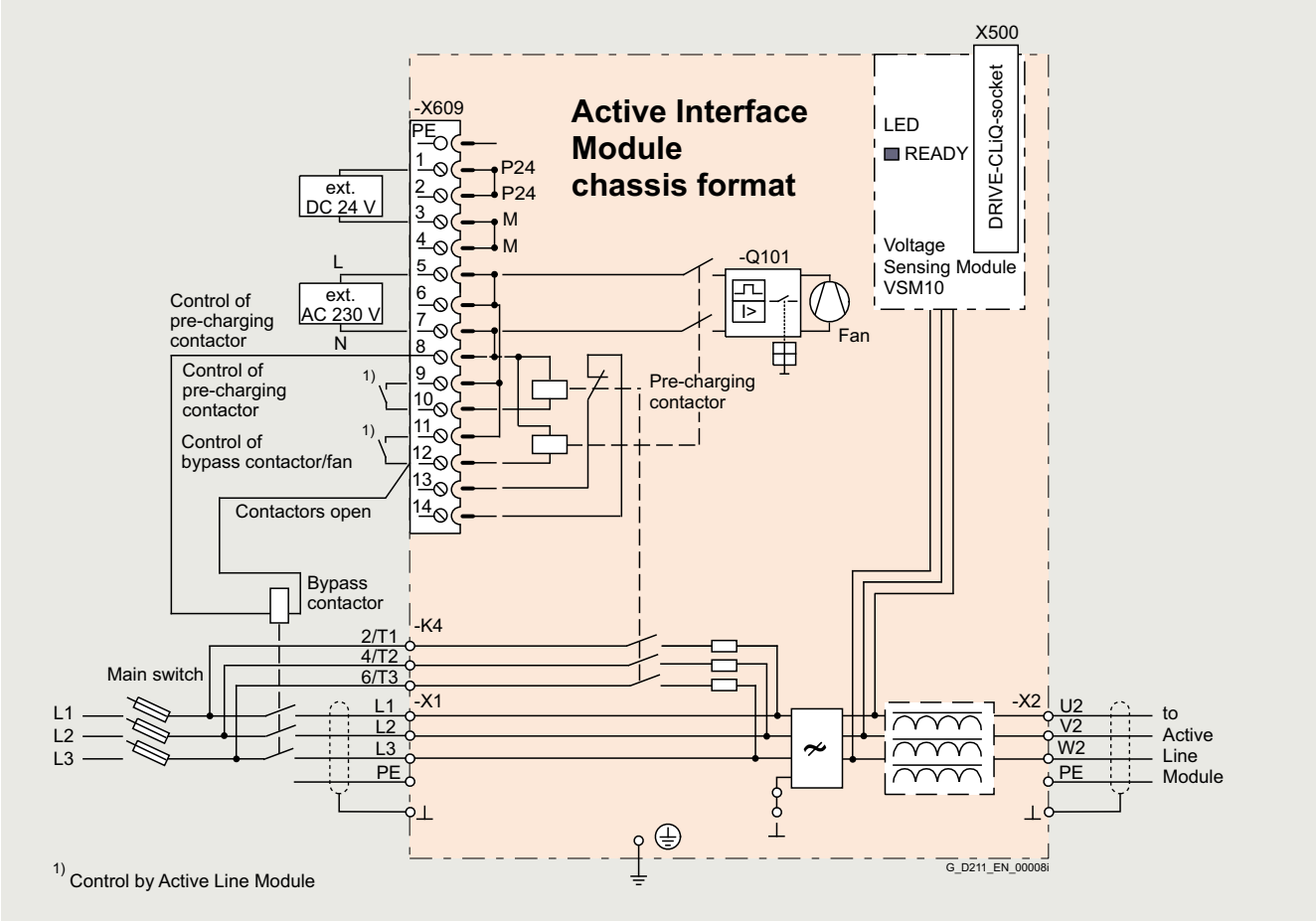

Connection example of an Active Interface Module with externally mounted bypass contactor (frame sizes HI and JI)

© Siemens 2024

Technical specifications

Line voltage 380 ... 480 V 3 AC		Active Interface Modules			
		6SL3300-7TE32-6AA1		6SL3300-7TE33-8AA1	6SL3300-7TE35-0AA1
Suitable for Active Line Module • Rated power at 400 V - Air-cooled - Liquid-cooled	 kW	 **132** 6SL3330-7TE32-1AA3 –	 **160** 6SL3330-7TE32-6AA3 –	 **235** 6SL3330-7TE33-8AA3 –	 **300** 6SL3330-7TE35-0AA3 6SL3335-7TE35-0AA3
Rated current	A	210	260	380	490
Bypass contactor		Included	Included	Included	Included
Current demand • 24 V DC auxiliary power supply • 230 V 2 AC - Inrush current - Holding current	 A A A	 0.17 1.25 0.6	 0.17 1.25 0.6	 0.17 2.5 1.2	 0.17 2.5 1.2
DC link capacitance • Drive line-up, max. [1]	 µF	 41600	 41600	 76800	 76800
Power loss, max. [2] • At 50 Hz 400 V • At 60 Hz 460 V	 kW kW	 2.1 2.1	 2.2 2.2	 3.0 3.0	 3.9 3.9
Cooling air requirement	m^3/s (ft^3/s)	0.24 (8.48)	0.24 (8.48)	0.47 (16.6)	0.47 (16.6)
Line/load connection L1, L2, L3 / U2, V2, W2 • Conductor cross-section, max. (IEC)	 mm^2	 Flat connector for M10 screw 2 × 185	 Flat connector for M10 screw 2 × 185	 Flat connector for M10 screw 2 × 185	 Flat connector for M10 screw 2 × 185
PE/GND connection • Conductor cross-section, max. (IEC)	 mm^2	2 × M10 nut 2 × 185	2 × M10 nut 2 × 185	2 × M10 nut 2 × 185	2 × M10 nut 2 × 185
Degree of protection		IP20	IP20	IP20	IP20
Dimensions • Width • Height • Depth	 mm (in) mm (in) mm (in)	 325 (12.8) 1400 (55.1) 355 (14.0)	 325 (12.8) 1400 (55.1) 355 (14.0)	 325 (12.8) 1533 (60.4) 544 (21.4)	 325 (12.8) 1533 (60.4) 544 (21.4)
Weight, approx.	kg (lb)	135 (298)	135 (298)	190 (419)	190 (419)
Frame size		FI	FI	GI	GI
Minimum short-circuit current [3]	kA	6.2	10.5	10.5	8

[1] Information on higher capacities is included in the SINAMICS Low Voltage Engineering Manual.

[2] The specified power loss represents the maximum value at 100 % utilization. The value is lower under normal operating conditions.

[3] Current required for reliable triggering of the protective devices.

© Siemens 2024

Technical specifications

Line voltage 380 ... 480 V 3 AC		**Active Interface Modules**			
		6SL3300-7TE38-4AA1		6SL3300-7TE41-4AA1	
Suitable for Active Line Module • Rated power at 400 V - Air-cooled	kW	**380** 6SL3330-7TE36-1AA3	**450/500** 6SL3330-7TE37-5AA3 6SL3330-7TE38-4AA3	**630** 6SL3330-7TE41-0AA3	**800/900** 6SL3330-7TE41-2AA3 6SL3330-7TE41-4AA3
Rated current	A	605	745/840	985	1260/1405
Bypass contactor		3RT1476-6AP36	3WA1110-4AE03-4EQ0	3WA1112-4AE03-4EQ0[1]	3WA1116-4AE03-4EQ0
Current demand • 24 V DC auxiliary power supply • 230 V 2 AC - Inrush current - Holding current	 A A A	 0.17 9.9 4.6	 0.17 9.9 4.6	 0.17 10.5 4.9	 0.17 10.5 4.9
DC link capacitance • Drive line-up, max. [1]	µF	134400	134400	230400	230400
Power loss, max. [2] • At 50 Hz 400 V • At 60 Hz 460 V	 kW kW	 5.5 5.5	 6.1 6.1	 7.5 7.5	 8.5 8.5
Cooling air requirement	m^3/s (ft^3/s)	0.4 (14.1)	0.4 (14.1)	0.4 (14.1)	0.4 (14.1)
Line/load connection L1, L2, L3 / U2, V2, W2 • Conductor cross-section, max. (IEC)	 mm^2	4 × hole for M12 4 × 240	4 × hole for M12 4 × 240	3 × hole for M12 6 × 240	3 × hole for M12 6 × 240
PE/GND connection • Conductor cross-section, max. (IEC)	 mm^2	2 × M12 nut 2 × 240	2 × M12 nut 2 × 240	4 × M12 nut 4 × 240	4 × M12 nut 4 × 240
Degree of protection		IP00	IP00	IP00	IP00
Dimensions • Width • Height • Depth	 mm (in) mm (in) mm (in)	 305 (12.0) 1750 (68.9) 544 (21.4)	 305 (12.0) 1750 (68.9) 544 (21.4)	 505 (19.9) 1750 (68.9) 544 (21.4)	 505 (19.9) 1750 (68.9) 544 (21.4)
Weight, approx.	kg (lb)	390 (860)	390 (860)	480 (1058)	480 (1058)
Frame size		HI	HI	JI	JI
Minimum short-circuit current [3]	kA	9.2	8.8/10.4	16	21

[1] Information on higher capacities is included in the SINAMICS Low Voltage Engineering Manual.

[2] The specified power loss represents the maximum value at 100 % utilization. The value is lower under normal operating conditions.

[3] Current required for reliable triggering of the protective devices.

© Siemens 2024

Technical specifications

Line voltage 500 ... 690 V 3 AC		Active Interface Modules			
		6SL3300-7TG35-8AA1	6SL3300-7TG37-4AA1	6SL3300-7TG41-3AA1	
Suitable for Active Line Module • Rated power at 690 V - Air-cooled - Liquid-cooled	kW	**630** 6SL3330-7TG35-8AA3 6SL3335-7TG35-8AA3	**800** 6SL3330-7TG37-4AA3 –	**1100** 6SL3330-7TG41-0AA3 –	**1400** 6SL3330-7TG41-3AA3 –
Rated current	A	575	735	1025	1270
Bypass contactor		3RT1476-6AP36	3RT1476-6AP36 (3 units)	3WA1220-4AE03-4EQ0-Z B12	3WA1220-4AE03-4EQ0-Z B16
Current demand • 24 V DC auxiliary power supply • 230 V 2 AC - Inrush current - Holding current	 A A A	 0.17 9.9 4.6	 0.17 10.5 4.9	 0.17 10.5 4.9	 0.17 10.5 4.9
DC link capacitance • Drive line-up, max. [1]	µF	59200	153600	153600	153600
Power loss, max. [2] • At 50 Hz 690 V • At 60 Hz 575 V	 kW kW	 6.8 6.8	 9.0 9.0	 9.2 9.2	 9.6 9.6
Cooling air requirement	m^3/s (ft^3/s)	0.4 (14.1)	0.4 (14.1)	0.4 (14.1)	0.4 (14.1)
Line/load connection L1, L2, L3 / U2, V2, W2 • Conductor cross-section, max. (IEC)	 mm^2	4 × hole for M12 4 × 240	3 × hole for M12 6 × 240	3 × hole for M12 6 × 240	3 × hole for M12 6 × 240
PE/GND connection • Conductor cross-section, max. (IEC)	 mm^2	2 × M12 nut 2 × 240	4 × M12 nut 4 × 240	4 × M12 nut 4 × 240	4 × M12 nut 4 × 240
Degree of protection		IP00	IP00	IP00	IP00
Dimensions • Width • Height • Depth	 mm (in) mm (in) mm (in)	 305 (12.0) 1750 (68.9) 544 (21.4)	 505 (19.9) 1750 (68.9) 544 (21.4)	 505 (19.9) 1750 (68.9) 544 (21.4)	 505 (19.9) 1750 (68.9) 544 (21.4)
Weight, approx.	kg (lb)	390 (860)	430 (948)	530 (1168)	530 (1168)
Frame size		HI	JI	JI	JI
Minimum short-circuit current [3]	kA	8.4	10.5	16	20

[1] Information on higher capacities is included in the SINAMICS Low Voltage Engineering Manual.

[2] The specified power loss represents the maximum value at 100 % utilization. The value is lower under normal operating conditions.

[3] Current required for reliable triggering of the protective devices.

© Siemens 2024

Overview

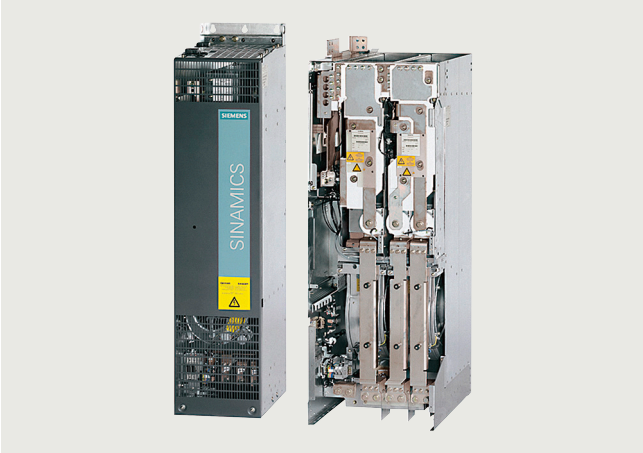

A Motor Module comprises a self-commutated inverter with IGBTs. It generates a variable voltage with variable frequency from the DC link voltage that feeds the connected motor.

Multiple Motor Modules can be operated on a single DC link. This permits energy to be transferred between the Motor Modules. This means that if one Motor Module operating in generator mode produces energy, the energy can be used by another Motor Module operating in motor mode.

Motor Modules are controlled by a Control Unit.

Design

The Motor Modules in the chassis format have the following interfaces as standard:

- 1 motor connection
- 1 connection for the 24 V DC electronics power supply
- 1 DC link connection (DCP, DCN) for connecting to the supply DC link
- 1 DC link connection (DCPA, DCNA) for connecting a Braking Module
- 1 DC link connection (DCPS, DCNS) for connecting a dv/dt filter
- 3 DRIVE-CLiQ sockets
- 1 temperature sensor input for KTY84-130, Pt1000, PTC or Pt100 (Pt1000 can be used from firmware V4.7 HF17 and higher)
- 1 connection for Safe Brake Adapter
- 1 connection for Safety Integrated
- 2 PE/protective conductor connections

The status of the Motor Modules is indicated via three LEDs.

The scope of supply of the Motor Modules includes:

- DRIVE-CLiQ cable for connection to the Control Unit
- DRIVE-CLiQ cable for connection to the next Motor Module
- 1 set of warning labels in 30 languages (BG, CN, CZ, DE, DK, EE, ES, FI, FR, GB, GR, HU, IE, IS, IT, JP, KR, LT, LV, MT, NL, NO, PL, PT, RO, RU, SE, SI, SK, TR)

Selection and ordering data

Type rating at 400 V or 690 V	Rated output current	**Motor Module**
kW	A	Article No.
Line voltage 380 ... 480 V 3 AC (DC link voltage 510 ... 720 V DC)		
110	210	**6SL3320-1TE32-1AA3**
132	260	**6SL3320-1TE32-6AA3**
160	310	**6SL3320-1TE33-1AA3**
200	380	**6SL3320-1TE33-8AA3**
250	490	**6SL3320-1TE35-0AA3**
315	605	**6SL3320-1TE36-1AA3**
400	745	**6SL3320-1TE37-5AA3**
450	840	**6SL3320-1TE38-4AA3**
560	985	**6SL3320-1TE41-0AA3**
710	1260	**6SL3320-1TE41-2AA3**
800	1405	**6SL3320-1TE41-4AA3**
Line voltage 500 ... 690 V 3 AC (DC link voltage 675 ... 1035 V DC)		
75	85	**6SL3320-1TG28-5AA3**
90	100	**6SL3320-1TG31-0AA3**
110	120	**6SL3320-1TG31-2AA3**
132	150	**6SL3320-1TG31-5AA3**
160	175	**6SL3320-1TG31-8AA3**
200	215	**6SL3320-1TG32-2AA3**
250	260	**6SL3320-1TG32-6AA3**
315	330	**6SL3320-1TG33-3AA3**
400	410	**6SL3320-1TG34-1AA3**
450	465	**6SL3320-1TG34-7AA3**
560	575	**6SL3320-1TG35-8AA3**
710	735	**6SL3320-1TG37-4AA3**
800	810	**6SL3320-1TG38-1AA3**
900	910	**6SL3320-1TG38-8AA3**
1000	1025	**6SL3320-1TG41-0AA3**
1200	1270	**6SL3320-1TG41-3AA3**

Extension of warranty

Siemens offers for SINAMICS S120 chassis units an extension of warranty/Service Protect up to 6½ years.

Details can be found in chapter Services and Documentation

Accessories for re-ordering

Description	Article No.
Dust protection blanking plugs (50 units) For DRIVE-CLiQ port	**6SL3066-4CA00-0AA0**

For motor-side components and Braking Modules, see System components.

© Siemens 2024

Integration

The Motor Modules communicate with the higher-level control module via DRIVE-CLiQ. This Control Unit can either be a CU320-2 or a SIMOTION D Control Unit.

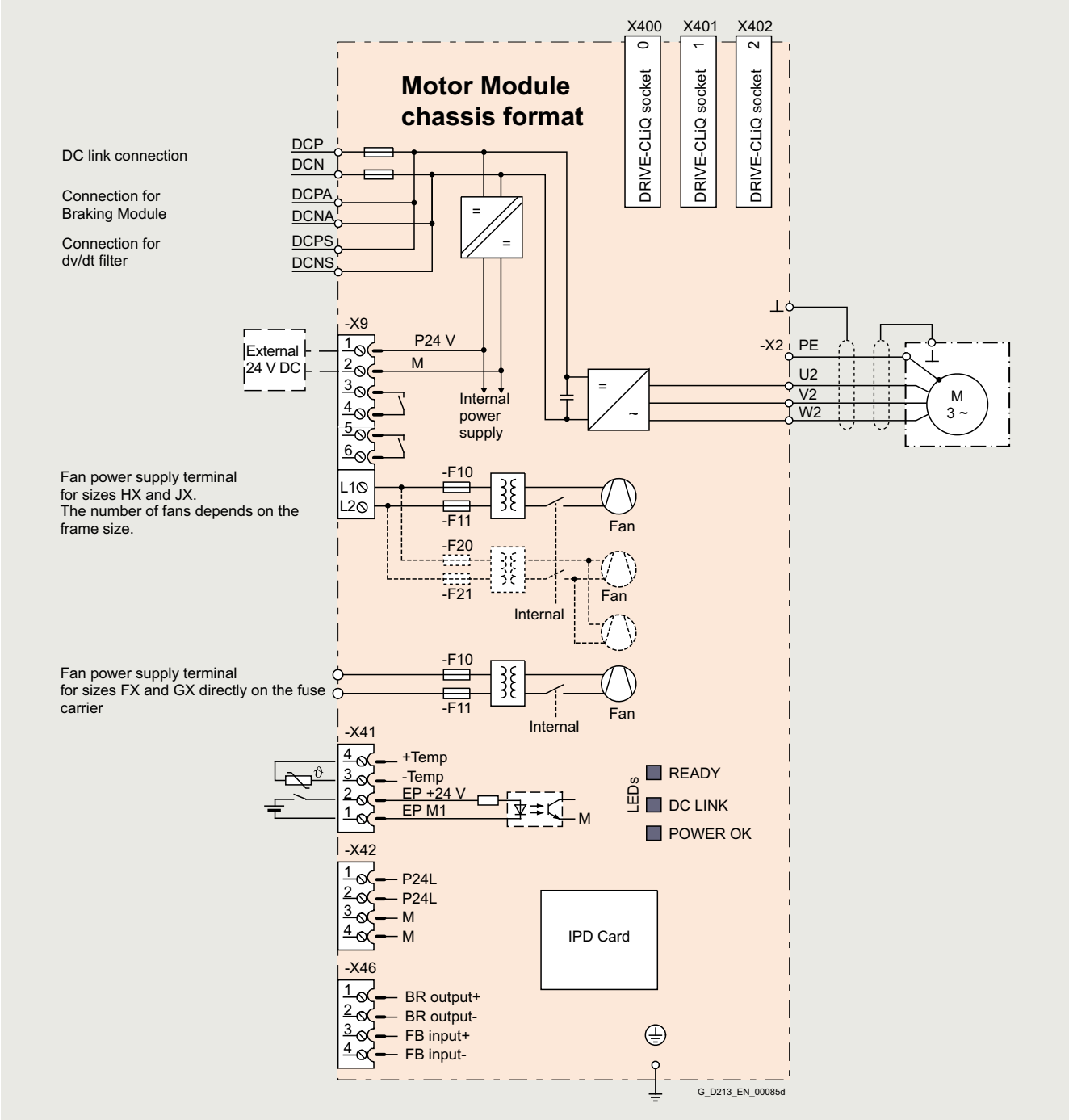

Connection example of a Motor Module

© Siemens 2024

Technical specifications

General technical specifications

Electrical specifications	
Efficiency	>98.5 %
DC link voltage (up to 2000 m (6562 ft) above sea level)	510 ... 720 V DC (line voltage 380 ... 480 V 3 AC) or 675 ... 1035 V DC (line voltage 500 ... 690 V 3 AC)
Output frequency [1)]	
• Control mode Servo	0 ... 550 Hz
• Control mode Vector	0 ... 550 Hz
• Control mode V/f	0 ... 550 Hz
Safety Integrated	Safety Integrity Level 2 (SIL2) acc. to IEC 61508, Performance Level d (PLd) acc. to EN ISO 13849-1 and Control Category 3 acc. to EN ISO 13849-1

[1)] Please note:
- The correlation between the maximum output frequency, pulse frequency and current derating. Higher output frequencies on request. For further information, see https://support.industry.siemens.com/cs/document/104020669
- The correlation between the minimum output frequency and permissible output current (current derating).
  For additional information, please refer to the SINAMICS Low Voltage Engineering Manual.

© Siemens 2024

Technical specifications

Line voltage 380 ... 480 V 3 AC DC link voltage 510 ... 720 V DC		Motor Modules				
		6SL3320-1TE32-1AA3	6SL3320-1TE32-6AA3	6SL3320-1TE33-1AA3	6SL3320-1TE33-8AA3	6SL3320-1TE35-0AA3
Type rating						
• At I_L (50 Hz 400 V) [1]	kW	**110**	**132**	**160**	**200**	**250**
• At I_H (50 Hz 400 V) [1]	kW	90	110	132	160	200
• At I_L (60 Hz 460 V) [2]	hp	150	200	250	300	400
• At I_H (60 Hz 460 V) [2]	hp	150	200	200	250	350
Output current						
• Rated current $I_{N\,O}$	A	210	260	310	380	490
• Base-load current I_L [3]	A	205	250	302	370	477
• Base-load current I_H [4]	A	178	233	277	340	438
• Maximum current $I_{max\,O}$	A	307	375	453	555	715
DC link current						
• Rated current $I_{N\,DC}$ when supplied via						
- Basic/Smart Line Module	A	252	312	372	456	588
- Active Line Module	A	227	281	335	411	529
• Base-load current $I_{L\,DC}$ [3] when supplied via						
- Basic/Smart Line Module	A	245	304	362	444	573
- Active Line Module	A	221	273	326	400	515
• Base-load current $I_{H\,DC}$ [4] when supplied via						
- Basic/Smart Line Module	A	224	277	331	405	523
- Active Line Module	A	202	250	298	365	470
Current demand						
• 24 V DC auxiliary power supply	A	0.8	0.8	0.9	0.9	0.9
• 400 V AC	A	0.63	1.13	1.8	1.8	1.8
DC link capacitance	µF	4200	5200	6300	7800	9600
Pulse frequency [5]						
• Rated frequency	kHz	2	2	2	2	2
• Pulse frequency, max.						
- Without current derating	kHz	2	2	2	2	2
- With current derating	kHz	8	8	8	8	8
Power loss, max. [6]						
• At 50 Hz 400 V	kW	1.86	2.5	2.96	3.67	4.28
• At 60 Hz 460 V	kW	1.94	2.6	3.1	3.8	4.5
Cooling air requirement	m^3/s (ft^3/s)	0.17 (6.00)	0.23 (8.12)	0.36 (12.7)	0.36 (12.7)	0.36 (12.7)
Sound pressure level L_{pA} (1 m) at 50/60 Hz	dB	64/67	71/71	69/73	69/73	69/73
DC link connection DCP, DCN		M10 screw	M10 screw	M10 screw	M10 screw	M10 screw
• Conductor cross-section, max. (IEC)	mm^2	2 × 185	2 × 185	2 × 240	2 × 240	2 × 240
Connection for Braking Module DCPA, DCNA [7]		M6 threaded bolt	M6 threaded bolt	M6 threaded bolt	M6 threaded bolt	M6 threaded bolt
Connection for dv/dt filter DCPS, DCNS		M8 screw	M8 screw	M8 screw	M8 screw	M8 screw
• Conductor cross-section, max. (IEC)	mm^2	1 × 35	1 × 35	1 × 70	1 × 70	1 × 70
Motor connection U2, V2, W2		M10 screw	M10 screw	M10 screw	M10 screw	M10 screw
• Conductor cross-section, max. (IEC)	mm^2	2 × 185	2 × 185	2 × 240	2 × 240	2 × 240
Cable length, max. [8]						
• Shielded	m (ft)	300 (984)	300 (984)	300 (984)	300 (984)	300 (984)
• Unshielded	m (ft)	450 (1476)	450 (1476)	450 (1476)	450 (1476)	450 (1476)

© Siemens 2024

Technical specifications

Line voltage 380 ... 480 V 3 AC DC link voltage 510 ... 720 V DC		Motor Modules				
		6SL3320-1TE32-1AA3	6SL3320-1TE32-6AA3	6SL3320-1TE33-1AA3	6SL3320-1TE33-8AA3	6SL3320-1TE35-0AA3
PE1/GND connection		M10 screw	M10 screw	M10 screw	M10 screw	M10 screw
• Conductor cross-section, max. (IEC)	mm^2	2 × 185	2 × 185	2 × 240	2 × 240	2 × 240
PE2/GND connection		M10 screw	M10 screw	M10 screw	M10 screw	M10 screw
• Conductor cross-section, max. (IEC)	mm^2	2 × 185	2 × 185	2 × 240	2 × 240	2 × 240
Degree of protection		IP20	IP20	IP20	IP20	IP20
Dimensions						
• Width	mm (in)	326 (12.8)	326 (12.8)	326 (12.8)	326 (12.8)	326 (12.8)
• Height	mm (in)	1400 (55.1)	1400 (55.1)	1533 (60.4)	1533 (60.4)	1533 (60.4)
• Depth	mm (in)	356 (14.0)	356 (14.0)	545 (21.5)	545 (21.5)	545 (21.5)
Weight, approx.	kg (lb)	95 (209)	95 (209)	136 (300)	136 (300)	136 (300)
Frame size		FX	FX	GX	GX	GX

1) Rated power of a typical 6-pole standard induction motor based on I_L or I_H for 400 V 3 AC 50 Hz.

2) Rated power of a typical 6-pole standard induction motor based on I_L or I_H for 460 V 3 AC 60 Hz.

3) The base-load current I_L is based on a duty cycle of 110 % for 60 s or 150 % for 10 s with a duty cycle duration of 300 s.

4) The base-load current I_H is based on a duty cycle of 150 % for 60 s or 160 % for 10 s with a duty cycle duration of 300 s.

5) Information regarding the correlation between the pulse frequency and maximum output current/output frequency is provided in the SINAMICS Low Voltage Engineering Manual.

6) The specified power loss represents the maximum value at 100 % utilization. The value is lower under normal operating conditions.

7) The connecting cables are included in the scope of supply of the Braking Module.

8) Total of all motor cables and DC link. Longer cable lengths for specific configurations are available on request.
For additional information, please refer to the SINAMICS Low Voltage Engineering Manual.

© Siemens 2024

Technical specifications

Line voltage 380 ... 480 V 3 AC DC link voltage 510 ... 720 V DC		Motor Modules		
		6SL3320-1TE36-1AA3	6SL3320-1TE37-5AA3	6SL3320-1TE38-4AA3
Type rating				
• At I_L (50 Hz 400 V) [1]	kW	**315**	**400**	**450**
• At I_H (50 Hz 400 V) [1]	kW	250	315	400
• At I_L (60 Hz 460 V) [2]	hp	500	600	700
• At I_H (60 Hz 460 V) [2]	hp	350	450	600
Output current				
• Rated current $I_{N\,O}$	A	605	745	840
• Base-load current I_L [3]	A	590	725	820
• Base-load current I_H [4]	A	460	570	700
• Maximum current $I_{max\,O}$	A	885	1087	1230
DC link current				
• Rated current $I_{N\,DC}$ when supplied via				
- Basic/Smart Line Module	A	726	894	1008
- Active Line Module	A	653	805	907
• Base-load current $I_{L\,DC}$ [3] when supplied via				
- Basic/Smart Line Module	A	707	871	982
- Active Line Module	A	636	784	884
• Base-load current $I_{H\,DC}$ [4] when supplied via				
- Basic/Smart Line Module	A	646	795	897
- Active Line Module	A	581	716	807
Current demand				
• 24 V DC auxiliary power supply	A	1.0	1.0	1.0
• 400 V AC	A	3.6	3.6	3.6
DC link capacitance	µF	12600	15600	16800
Pulse frequency [5]				
• Rated frequency	kHz	1.25	1.25	1.25
• Pulse frequency, max.				
- Without current derating	kHz	1.25	1.25	1.25
- With current derating	kHz	8	8	8
Power loss, max. [6]				
• At 50 Hz 400 V	kW	5.84	6.68	7.15
• At 60 Hz 460 V	kW	6.3	7.3	7.8
Cooling air requirement	m^3/s (ft^3/s)	0.78 (27.5)	0.78 (27.5)	0.78 (27.5)
Sound pressure level L_{pA} (1 m) at 50/60 Hz	dB	70/73	70/73	70/73
DC link connection DCP, DCN		4 × hole for M10 Busbar	4 × hole for M10 Busbar	4 × hole for M10 Busbar
Connection for Braking Module DCPA, DCNA [7]		Connection for connection clip	Connection for connection clip	Connection for connection clip
Connection for dv/dt filter DCPS, DCNS		M10 screw	M10 screw	M10 screw
• Conductor cross-section, max. (IEC)	mm^2	1 × 185	1 × 185	1 × 185
Motor connection U2, V2, W2		2 × M12 screw	2 × M12 screw	2 × M12 screw
• Conductor cross-section, max. (IEC)	mm^2	4 × 240	4 × 240	4 × 240
Cable length, max. [8]				
• Shielded	m (ft)	300 (984)	300 (984)	300 (984)
• Unshielded	m (ft)	450 (1476)	450 (1476)	450 (1476)

© Siemens 2024

Technical specifications

Line voltage 380 ... 480 V 3 AC **DC link voltage 510 ... 720 V DC**		**Motor Modules**		
		6SL3320-1TE36-1AA3	6SL3320-1TE37-5AA3	6SL3320-1TE38-4AA3
PE1/GND connection		M12 screw	M12 screw	M12 screw
• Conductor cross-section, max. (IEC)	mm^2	240	240	240
PE2/GND connection		2 × M12 screw	2 × M12 screw	2 × M12 screw
• Conductor cross-section, max. (IEC)	mm^2	2 × 240	2 × 240	2 × 240
Degree of protection		IP00	IP00	IP00
Dimensions				
• Width	mm (in)	503 (19.8)	503 (19.8)	503 (19.8)
• Height	mm (in)	1475 (58.1)	1475 (58.1)	1475 (58.1)
• Depth	mm (in)	547 (21.5)	547 (21.5)	547 (21.5)
Weight, approx.	kg (lb)	290 (639)	290 (639)	290 (639)
Frame size		HX	HX	HX

1) Rated power of a typical 6-pole standard induction motor based on I_L or I_H for 400 V 3 AC 50 Hz.

2) Rated power of a typical 6-pole standard induction motor based on I_L or I_H for 460 V 3 AC 60 Hz.

3) The base-load current I_L is based on a duty cycle of 110 % for 60 s or 150 % for 10 s with a duty cycle duration of 300 s.

4) The base-load current I_H is based on a duty cycle of 150 % for 60 s or 160 % for 10 s with a duty cycle duration of 300 s.

5) Information regarding the correlation between the pulse frequency and maximum output current/output frequency is provided in the SINAMICS Low Voltage Engineering Manual.

6) The specified power loss represents the maximum value at 100 % utilization. The value is lower under normal operating conditions.

7) The connection clips are included in the scope of supply of the Braking Module.

8) Total of all motor cables and DC link. Longer cable lengths for specific configurations are available on request.
For additional information, please refer to the SINAMICS Low Voltage Engineering Manual.

© Siemens 2024

Technical specifications

Line voltage 380 ... 480 V 3 AC DC link voltage 510 ... 720 V DC		Motor Modules		
		6SL3320-1TE41-0AA3	6SL3320-1TE41-2AA3	6SL3320-1TE41-4AA3
Type rating				
• At I_L (50 Hz 400 V) [1]	kW	**560**	**710**	**800**
• At I_H (50 Hz 400 V) [1]	kW	450	560	710
• At I_L (60 Hz 460 V) [2]	hp	800	1000	1150
• At I_H (60 Hz 460 V) [2]	hp	700	900	1000
Output current				
• Rated current $I_{N\,O}$	A	985	1260	1405
• Base-load current I_L [3]	A	960	1230	1370
• Base-load current I_H [4]	A	860	1127	1257
• Maximum current $I_{max\,O}$	A	1440	1845	2055
DC link current				
• Rated current $I_{N\,DC}$ when supplied via				
- Basic/Smart Line Module	A	1182	1512	1686
- Active Line Module	A	1064	1361	1517
• Base-load current $I_{L\,DC}$ [3] when supplied via				
- Basic/Smart Line Module	A	1152	1474	1643
- Active Line Module	A	1037	1326	1479
• Base-load current $I_{H\,DC}$ [4] when supplied via				
- Basic/Smart Line Module	A	1051	1345	1500
- Active Line Module	A	946	1211	1350
Current demand				
• 24 V DC auxiliary power supply	A	1.25	1.4	1.4
• 400 V AC	A	5.4	5.4	5.4
DC link capacitance	µF	18900	26100	28800
Pulse frequency [5]				
• Rated frequency	kHz	1.25	1.25	1.25
• Pulse frequency, max.				
- Without current derating	kHz	1.25	1.25	1.25
- With current derating	kHz	8	8	8
Power loss, max. [6]				
• At 50 Hz 400 V	kW	9.5	11.1	12.0
• At 60 Hz 460 V	kW	10.2	12.0	13.0
Cooling air requirement	m^3/s (ft^3/s)	1.08 (38.1)	1.08 (38.1)	1.08 (38.1)
Sound pressure level L_{pA} (1 m) at 50/60 Hz	dB	71/73	71/73	71/73
DC link connection DCP, DCN		4 × hole for M10 Busbar	4 × hole for M10 Busbar	4 × hole for M10 Busbar
Connection for Braking Module DCPA, DCNA [7]		Connection for connection clip	Connection for connection clip	Connection for connection clip
Connection for dv/dt filter DCPS, DCNS		2 x M10 screw	2 x M10 screw	2 x M10 screw
• Conductor cross-section, max. (IEC)	mm^2	2 × 185	2 × 185	2 × 185
Motor connection U2, V2, W2		3 × M12 screw	3 × M12 screw	3 × M12 screw
• Conductor cross-section, max. (IEC)	mm^2	6 × 240	6 × 240	6 × 240
Cable length, max. [8]				
• Shielded	m (ft)	300 (984)	300 (984)	300 (984)
• Unshielded	m (ft)	450 (1476)	450 (1476)	450 (1476)

© Siemens 2024

Technical specifications

Line voltage 380 ... 480 V 3 AC **DC link voltage 510 ... 720 V DC**		**Motor Modules**		
		6SL3320-1TE41-0AA3	6SL3320-1TE41-2AA3	6SL3320-1TE41-4AA3
PE1/GND connection		M12 screw	M12 screw	M12 screw
• Conductor cross-section, max. (IEC)	mm^2	240	240	240
PE2/GND connection		3 × M12 screw	3 × M12 screw	3 × M12 screw
• Conductor cross-section, max. (IEC)	mm^2	3 × 240	3 × 240	3 × 240
Degree of protection		IP00	IP00	IP00
Dimensions				
• Width	mm (in)	704 (27.7)	704 (27.7)	704 (27.7)
• Height	mm (in)	1475 (58.1)	1475 (58.1)	1475 (58.1)
• Depth	mm (in)	549 (21.6)	549 (21.6)	549 (21.6)
Weight, approx.	kg (lb)	450 (992)	450 (992)	450 (992)
Frame size		JX	JX	JX

1) Rated power of a typical 6-pole standard induction motor based on I_L or I_H for 400 V 3 AC 50 Hz.

2) Rated power of a typical 6-pole standard induction motor based on I_L or I_H for 460 V 3 AC 60 Hz.

3) The base-load current I_L is based on a duty cycle of 110 % for 60 s or 150 % for 10 s with a duty cycle duration of 300 s.

4) The base-load current I_H is based on a duty cycle of 150 % for 60 s or 160 % for 10 s with a duty cycle duration of 300 s.

5) Information regarding the correlation between the pulse frequency and maximum output current/output frequency is provided in the SINAMICS Low Voltage Engineering Manual.

6) The specified power loss represents the maximum value at 100 % utilization. The value is lower under normal operating conditions.

7) The connection clips are included in the scope of supply of the Braking Module.

8) Total of all motor cables and DC link. Longer cable lengths for specific configurations are available on request.
For additional information, please refer to the SINAMICS Low Voltage Engineering Manual.

© Siemens 2024

Technical specifications

Line voltage 500 ... 690 V 3 AC DC link voltage 675 ... 1035 V DC		Motor Modules			
		6SL3320-1TG28-5AA3	6SL3320-1TG31-0AA3	6SL3320-1TG31-2AA3	6SL3320-1TG31-5AA3
Type rating					
• At I_L (50 Hz 690 V) [1]	kW	**75**	**90**	**110**	**132**
• At I_H (50 Hz 690 V) [1]	kW	55	75	90	110
• At I_L (50 Hz 500 V) [1]	kW	55	55	75	90
• At I_H (50 Hz 500 V) [1]	kW	45	55	75	90
• At I_L (60 Hz 575 V) [2]	hp	75	75	100	150
• At I_H (60 Hz 575 V) [2]	hp	75	75	100	125
Output current					
• Rated current $I_{N\,O}$	A	85	100	120	150
• Base-load current I_L [3]	A	80	95	115	142
• Base-load current I_H [4]	A	76	89	107	134
• Maximum current $I_{max\,O}$	A	120	142	172	213
DC link current					
• Rated current $I_{N\,DC}$ when supplied via					
- Basic/Smart Line Module	A	102	120	144	180
- Active Line Module	A	92	108	130	162
• Base-load current $I_{L\,DC}$ [3] when supplied via					
- Basic/Smart Line Module	A	99	117	140	175
- Active Line Module	A	89	105	126	157
• Base-load current $I_{H\,DC}$ [4] when supplied via					
- Basic/Smart Line Module	A	90	106	128	160
- Active Line Module	A	81	96	115	144
Current demand					
• 24 V DC auxiliary power supply	A	0.8	0.8	0.8	0.8
• 500 V AC	A	0.7	0.7	0.7	0.7
• 690 V AC	A	0.4	0.4	0.4	0.4
DC link capacitance	µF	1200	1200	1600	2800
Pulse frequency [5]					
• Rated frequency	kHz	1.25	1.25	1.25	1.25
• Pulse frequency, max.					
- Without current derating	kHz	1.25	1.25	1.25	1.25
- With current derating	kHz	7.5	7.5	7.5	7.5
Power loss, max. [6]					
• At 50 Hz 690 V	kW	1.17	1.43	1.89	1.8
• At 60 Hz 575 V	kW	1.1	1.3	1.77	1.62
Cooling air requirement	m^3/s (ft^3/s)	0.17 (6.00)	0.17 (6.00)	0.17 (6.00)	0.17 (6.00)
Sound pressure level L_{pA} (1 m) at 50/60 Hz	dB	64/67	64/67	64/67	64/67
DC link connection DCP, DCN		M10 screw	M10 screw	M10 screw	M10 screw
• Conductor cross-section, max. (IEC)	mm^2	2 × 185	2 × 185	2 × 185	2 × 185
Connection for Braking Module DCPA, DCNA [7]		M6 stud	M6 stud	M6 stud	M6 stud
Connection for dv/dt filter DCPS, DCNS		M8 screw	M8 screw	M8 screw	M8 screw
• Conductor cross-section, max. (IEC)	mm^2	1 × 70	1 × 70	1 × 70	1 × 70
Motor connection U2, V2, W2		M10 screw	M10 screw	M10 screw	M10 screw
• Conductor cross-section, max. (IEC)	mm^2	2 × 185	2 × 185	2 × 185	2 × 185
Cable length, max. [8]					
• Shielded	m (ft)	300 (984)	300 (984)	300 (984)	300 (984)
• Unshielded	m (ft)	450 (1476)	450 (1476)	450 (1476)	450 (1476)

© Siemens 2024

Technical specifications

Line voltage 500 ... 690 V 3 AC **DC link voltage 675 ... 1035 V DC**		**Motor Modules**			
		6SL3320-1TG28-5AA3	6SL3320-1TG31-0AA3	6SL3320-1TG31-2AA3	6SL3320-1TG31-5AA3
PE1/GND connection		M10 screw	M10 screw	M10 screw	M10 screw
• Conductor cross-section, max. (IEC)	mm^2	2 × 185	2 × 185	2 × 185	2 × 185
PE2/GND connection		M10 screw	M10 screw	M10 screw	M10 screw
• Conductor cross-section, max. (IEC)	mm^2	2 × 185	2 × 185	2 × 185	2 × 185
Degree of protection		IP20	IP20	IP20	IP20
Dimensions					
• Width	mm (in)	326 (12.8)	326 (12.8)	326 (12.8)	326 (12.8)
• Height	mm (in)	1400 (55.1)	1400 (55.1)	1400 (55.1)	1400 (55.1)
• Depth	mm (in)	356 (14.0)	356 (14.0)	356 (14.0)	356 (14.0)
Weight, approx.	kg (lb)	95 (209)	95 (209)	95 (209)	95 (209)
Frame size		FX	FX	FX	FX

1) Rated power of a typical 6-pole standard induction motor based on I_L or I_H for 500 V or 690 V 3 AC 50 Hz.

2) Rated power of a typical 6-pole standard induction motor based on I_L or I_H for 575 V 3 AC 60 Hz.

3) The base-load current I_L is based on a duty cycle of 110 % for 60 s or 150 % for 10 s with a duty cycle duration of 300 s.

4) The base-load current I_H is based on a duty cycle of 150 % for 60 s or 160 % for 10 s with a duty cycle duration of 300 s.

5) Information regarding the correlation between the pulse frequency and maximum output current/output frequency is provided in the SINAMICS Low Voltage Engineering Manual.

6) The specified power loss represents the maximum value at 100 % utilization. The value is lower under normal operating conditions.

7) The connecting cables are included in the scope of supply of the Braking Module.

8) Total of all motor cables and DC link. Longer cable lengths for specific configurations are available on request.
For additional information, please refer to the SINAMICS Low Voltage Engineering Manual.

© Siemens 2024

Technical specifications

Line voltage 500 ... 690 V 3 AC DC link voltage 675 ... 1035 V DC		Motor Modules			
		6SL3320-1TG31-8AA3	6SL3320-1TG32-2AA3	6SL3320-1TG32-6AA3	6SL3320-1TG33-3AA3
Type rating					
• At I_L (50 Hz 690 V) [1]	kW	**160**	**200**	**250**	**315**
• At I_H (50 Hz 690 V) [1]	kW	132	160	200	250
• At I_L (50 Hz 500 V) [1]	kW	110	132	160	200
• At I_H (50 Hz 500 V) [1]	kW	90	110	132	160
• At I_L (60 Hz 575 V) [2]	hp	150	200	250	300
• At I_H (60 Hz 575 V) [2]	hp	150	200	200	250
Output current					
• Rated current $I_{N\,O}$	A	175	215	260	330
• Base-load current I_L [3]	A	171	208	250	320
• Base-load current I_H [4]	A	157	192	233	280
• Maximum current $I_{max\,O}$	A	255	312	375	480
DC link current					
• Rated current $I_{N\,DC}$ when supplied via					
- Basic/Smart Line Module	A	210	258	312	396
- Active Line Module	A	189	232	281	356
• Base-load current $I_{L\,DC}$ [3] when supplied via					
- Basic/Smart Line Module	A	204	251	304	386
- Active Line Module	A	184	226	273	347
• Base-load current $I_{H\,DC}$ [4] when supplied via					
- Basic/Smart Line Module	A	186	229	277	352
- Active Line Module	A	168	206	250	316
Current demand					
• 24 V DC auxiliary power supply	A	0.9	0.9	0.9	0.9
• 500 V AC	A	1.5	1.5	1.5	1.5
• 690 V AC	A	1.0	1.0	1.0	1.0
DC link capacitance	µF	2800	2800	3900	4200
Pulse frequency [5]					
• Rated frequency	kHz	1.25	1.25	1.25	1.25
• Pulse frequency, max.					
- Without current derating	kHz	1.25	1.25	1.25	1.25
- With current derating	kHz	7.5	7.5	7.5	7.5
Power loss, max. [6]					
• At 50 Hz 690 V	kW	2.67	3.09	3.62	4.34
• At 60 Hz 575 V	kW	2.5	2.91	3.38	3.98
Cooling air requirement	m^3/s (ft^3/s)	0.36 (12.7)	0.36 (12.7)	0.36 (12.7)	0.36 (12.7)
Sound pressure level L_{pA} (1 m) at 50/60 Hz	dB	69/73	69/73	69/73	69/73
DC link connection DCP, DCN		M10 screw	M10 screw	M10 screw	M10 screw
• Conductor cross-section, max. (IEC)	mm^2	2 × 240	2 × 240	2 × 240	2 × 240
Connection for Braking Module DCPA, DCNA [7]		M6 stud	M6 stud	M6 stud	M6 stud
Connection for dv/dt filter DCPS, DCNS		M8 screw	M8 screw	M8 screw	M8 screw
• Conductor cross-section, max. (IEC)	mm^2	1 × 70	1 × 70	1 × 70	1 × 70
Motor connection U2, V2, W2		M10 screw	M10 screw	M10 screw	M10 screw
• Conductor cross-section, max. (IEC)	mm^2	2 × 240	2 × 240	2 × 240	2 × 240
Cable length, max. [8]					
• Shielded	m (ft)	300 (984)	300 (984)	300 (984)	300 (984)
• Unshielded	m (ft)	450 (1476)	450 (1476)	450 (1476)	450 (1476)

© Siemens 2024

Technical specifications

Line voltage 500 ... 690 V 3 AC **DC link voltage 675 ... 1035 V DC**		**Motor Modules**			
		6SL3320-1TG31-8AA3	6SL3320-1TG32-2AA3	6SL3320-1TG32-6AA3	6SL3320-1TG33-3AA3
PE1/GND connection		M10 screw	M10 screw	M10 screw	M10 screw
• Conductor cross-section, max. (IEC)	mm^2	2 × 240	2 × 240	2 × 240	2 × 240
PE2/GND connection		M10 screw	M10 screw	M10 screw	M10 screw
• Conductor cross-section, max. (IEC)	mm^2	2 × 240	2 × 240	2 × 240	2 × 240
Degree of protection		IP20	IP20	IP20	IP20
Dimensions					
• Width	mm (in)	326 (12.8)	326 (12.8)	326 (12.8)	326 (12.8)
• Height	mm (in)	1533 (60.4)	1533 (60.4)	1533 (60.4)	1533 (60.4)
• Depth	mm (in)	545 (21.5)	545 (21.5)	545 (21.5)	545 (21.5)
Weight, approx.	kg (lb)	136 (300)	136 (300)	136 (300)	136 (300)
Frame size		GX	GX	GX	GX

1) Rated power of a typical 6-pole standard induction motor based on I_L or I_H for 500 V or 690 V 3 AC 50 Hz.

2) Rated power of a typical 6-pole standard induction motor based on I_L or I_H for 575 V 3 AC 60 Hz.

3) The base-load current I_L is based on a duty cycle of 110 % for 60 s or 150 % for 10 s with a duty cycle duration of 300 s.

4) The base-load current I_H is based on a duty cycle of 150 % for 60 s or 160 % for 10 s with a duty cycle duration of 300 s.

5) Information regarding the correlation between the pulse frequency and maximum output current/output frequency is provided in the SINAMICS Low Voltage Engineering Manual.

6) The specified power loss represents the maximum value at 100 % utilization. The value is lower under normal operating conditions.

7) The connecting cables are included in the scope of supply of the Braking Module.

8) Total of all motor cables and DC link. Longer cable lengths for specific configurations are available on request.
For additional information, please refer to the SINAMICS Low Voltage Engineering Manual.

© Siemens 2024

Technical specifications

Line voltage 500 ... 690 V 3 AC DC link voltage 675 ... 1035 V DC		Motor Modules			
		6SL3320-1TG34-1AA3	6SL3320-1TG34-7AA3	6SL3320-1TG35-8AA3	6SL3320-1TG37-4AA3
Type rating					
• At I_L (50 Hz 690 V) [1]	kW	**400**	**450**	**560**	**710**
• At I_H (50 Hz 690 V) [1]	kW	315	400	450	630
• At I_L (50 Hz 500 V) [1]	kW	250	315	400	500
• At I_H (50 Hz 500 V) [1]	kW	200	250	315	450
• At I_L (60 Hz 575 V) [2]	hp	400	450	600	700
• At I_H (60 Hz 575 V) [2]	hp	350	450	500	700
Output current					
• Rated current $I_{N\,O}$	A	410	465	575	735
• Base-load current I_L [3]	A	400	452	560	710
• Base-load current I_H [4]	A	367	416	514	657
• Maximum current $I_{max\,O}$	A	600	678	840	1065
DC link current					
• Rated current $I_{N\,DC}$ when supplied via					
- Basic/Smart Line Module	A	492	558	690	882
- Active Line Module	A	443	502	621	794
• Base-load current $I_{L\,DC}$ [3] when supplied via					
- Basic/Smart Line Module	A	479	544	672	859
- Active Line Module	A	431	489	605	774
• Base-load current $I_{H\,DC}$ [4] when supplied via					
- Basic/Smart Line Module	A	437	496	614	784
- Active Line Module	A	394	446	552	706
Current demand					
• 24 V DC auxiliary power supply	A	1.0	1.0	1.0	1.25
• 500 V AC	A	3.0	3.0	3.0	4.4
• 690 V AC	A	2.1	2.1	2.1	3.1
DC link capacitance	µF	7400	7400	7400	11100
Pulse frequency [5]					
• Rated frequency	kHz	1.25	1.25	1.25	1.25
• Pulse frequency, max.					
- Without current derating	kHz	1.25	1.25	1.25	1.25
- With current derating	kHz	7.5	7.5	7.5	7.5
Power loss, max. [6]					
• At 50 Hz 690 V	kW	6.13	6.80	10.3	10.9
• At 60 Hz 575 V	kW	5.71	6.32	9.7	10
Cooling air requirement	m^3/s (ft^3/s)	0.78 (27.5)	0.78 (27.5)	0.78 (27.5)	1.08 (38.1)
Sound pressure level L_{pA} (1 m) at 50/60 Hz	dB	70/73	70/73	70/73	71/73
DC link connection DCP, DCN		4 × hole for M10 Busbar	4 × hole for M10 Busbar	4 × hole for M10 Busbar	4 × hole for M10 Busbar
Connection for Braking Module DCPA, DCNA [7]		M8 stud	M8 stud	M8 stud	M8 stud
Connection for dv/dt filter DCPS, DCNS		M10 screw	M10 screw	M10 screw	2 x M10 screw
• Conductor cross-section, max. (IEC)	mm^2	1 × 185	1 × 185	1 × 185	2 × 185
Motor connection U2, V2, W2		2 × M12 screw	2 × M12 screw	2 × M12 screw	3 × M12 screw
• Conductor cross-section, max. (IEC)	mm^2	4 × 240	4 × 240	4 × 240	6 × 240
Cable length, max. [8]					
• Shielded	m (ft)	300 (984)	300 (984)	300 (984)	300 (984)
• Unshielded	m (ft)	450 (1476)	450 (1476)	450 (1476)	450 (1476)

© Siemens 2024

Technical specifications

Line voltage 500 ... 690 V 3 AC **DC link voltage 675 ... 1035 V DC**		**Motor Modules**			
		6SL3320-1TG34-1AA3	6SL3320-1TG34-7AA3	6SL3320-1TG35-8AA3	6SL3320-1TG37-4AA3
PE1/GND connection		M12 screw	M12 screw	M12 screw	M12 screw
• Conductor cross-section, max. (IEC)	mm^2	240	240	240	240
PE2/GND connection		2 × M12 screw	2 × M12 screw	2 × M12 screw	3 × M12 screw
• Conductor cross-section, max. (IEC)	mm^2	2 × 240	2 × 240	2 × 240	3 × 240
Degree of protection		IP00	IP00	IP00	IP00
Dimensions					
• Width	mm (in)	503 (19.8)	503 (19.8)	503 (19.8)	704 (27.7)
• Height	mm (in)	1475 (58.1)	1475 (58.1)	1475 (58.1)	1475 (58.1)
• Depth	mm (in)	547 (21.5)	547 (21.5)	547 (21.5)	550 (21.7)
Weight, approx.	kg (lb)	290 (639)	290 (639)	290 (639)	450 (992)
Frame size		HX	HX	HX	JX

1) Rated power of a typical 6-pole standard induction motor based on I_L or I_H for 500 V or 690 V 3 AC 50 Hz.

2) Rated power of a typical 6-pole standard induction motor based on I_L or I_H for 575 V 3 AC 60 Hz.

3) The base-load current I_L is based on a duty cycle of 110 % for 60 s or 150 % for 10 s with a duty cycle duration of 300 s.

4) The base-load current I_H is based on a duty cycle of 150 % for 60 s or 160 % for 10 s with a duty cycle duration of 300 s.

5) Information regarding the correlation between the pulse frequency and maximum output current/output frequency is provided in the SINAMICS Low Voltage Engineering Manual.

6) The specified power loss represents the maximum value at 100 % utilization. The value is lower under normal operating conditions.

7) The connection clips are included in the scope of supply of the Braking Module.

8) Total of all motor cables and DC link. Longer cable lengths for specific configurations are available on request.
For additional information, please refer to the SINAMICS Low Voltage Engineering Manual.

© Siemens 2024

Technical specifications

Line voltage 500 ... 690 V 3 AC DC link voltage 675 ... 1035 V DC		Motor Modules			
		6SL3320-1TG38-1AA3	6SL3320-1TG38-8AA3	6SL3320-1TG41-0AA3	6SL3320-1TG41-3AA3
Type rating					
• At I_L (50 Hz 690 V) [1]	kW	**800**	**900**	**1000**	**1200**
• At I_H (50 Hz 690 V) [1]	kW	710	800	900	1000
• At I_L (50 Hz 500 V) [1]	kW	560	630	710	900
• At I_H (50 Hz 500 V) [1]	kW	500	560	630	800
• At I_L (60 Hz 575 V) [2]	hp	800	900	1000	1250
• At I_H (60 Hz 575 V) [2]	hp	700	800	900	1000
Output current					
• Rated current $I_{N\,O}$	A	810	910	1025	1270
• Base-load current I_L [3]	A	790	880	1000	1230
• Base-load current I_H [4]	A	724	814	917	1136
• Maximum current $I_{max\,O}$	A	1185	1320	1500	1845
DC link current					
• Rated current $I_{N\,DC}$ when supplied via					
- Basic/Smart Line Module	A	972	1092	1230	1524
- Active Line Module	A	875	983	1107	1372
• Base-load current $I_{L\,DC}$ [3] when supplied via					
- Basic/Smart Line Module	A	947	1064	1199	1485
- Active Line Module	A	853	958	1079	1337
• Base-load current $I_{H\,DC}$ [4] when supplied via					
- Basic/Smart Line Module	A	865	971	1094	1356
- Active Line Module	A	778	874	985	1221
Current demand					
• 24 V DC auxiliary power supply	A	1.25	1.4	1.4	1.4
• 500 V AC	A	4.4	4.4	4.4	4.4
• 690 V AC	A	3.1	3.1	3.1	3.1
DC link capacitance	µF	11100	14400	14400	19200
Pulse frequency [5]					
• Rated frequency	kHz	1.25	1.25	1.25	1.25
• Pulse frequency, max.					
- Without current derating	kHz	1.25	1.25	1.25	1.25
- With current derating	kHz	7.5	7.5	7.5	7.5
Power loss, max. [6]					
• At 50 Hz 690 V	kW	11.5	11.7	13.2	16.0
• At 60 Hz 575 V	kW	10.5	10.6	12.0	14.2
Cooling air requirement	m^3/s (ft^3/s)	1.08 (38.1)	1.08 (38.1)	1.08 (38.1)	1.08 (38.1)
Sound pressure level L_{pA} (1 m) at 50/60 Hz	dB	71/73	71/73	71/73	71/73
DC link connection DCP, DCN		4 × hole for M10 Busbar	4 × hole for M10 Busbar	4 × hole for M10 Busbar	4 × hole for M10 Busbar
Connection for Braking Module DCPA, DCNA [7]		M8 stud	M8 stud	M8 stud	M8 stud
Connection for dv/dt filter DCPS, DCNS		2 x M10 screw	2 x M10 screw	2 x M10 screw	2 x M10 screw
• Conductor cross-section, max. (IEC)	mm^2	2 × 185	2 × 185	2 × 185	2 × 185
Motor connection U2, V2, W2		3 × M12 screw	3 × M12 screw	3 × M12 screw	3 × M12 screw
• Conductor cross-section, max. (IEC)	mm^2	6 × 240	6 × 240	6 × 240	6 × 240
Cable length, max. [8]					
• Shielded	m (ft)	300 (984)	300 (984)	300 (984)	300 (984)
• Unshielded	m (ft)	450 (1476)	450 (1476)	450 (1476)	450 (1476)

© Siemens 2024

Technical specifications

Line voltage 500 ... 690 V 3 AC **DC link voltage 675 ... 1035 V DC**		**Motor Modules**			
		6SL3320-1TG38-1AA3	6SL3320-1TG38-8AA3	6SL3320-1TG41-0AA3	6SL3320-1TG41-3AA3
PE1/GND connection		M12 screw	M12 screw	M12 screw	M12 screw
• Conductor cross-section, max. (IEC)	mm^2	240	240	240	240
PE2/GND connection		3 × M12 screw	3 × M12 screw	3 × M12 screw	3 × M12 screw
• Conductor cross-section, max. (IEC)	mm^2	3 × 240	3 × 240	3 × 240	3 × 240
Degree of protection		IP00	IP00	IP00	IP00
Dimensions					
• Width	mm (in)	704 (27.7)	704 (27.7)	704 (27.7)	704 (27.7)
• Height	mm (in)	1475 (58.1)	1475 (58.1)	1475 (58.1)	1475 (58.1)
• Depth	mm (in)	550 (21.7)	550 (21.7)	550 (21.7)	550 (21.7)
Weight, approx.	kg (lb)	450 (992)	450 (992)	450 (992)	450 (992)
Frame size		JX	JX	JX	JX

1) Rated power of a typical 6-pole standard induction motor based on I_L or I_H for 500 V or 690 V 3 AC 50 Hz.

2) Rated power of a typical 6-pole standard induction motor based on I_L or I_H for 575 V 3 AC 60 Hz.

3) The base-load current I_L is based on a duty cycle of 110 % for 60 s or 150 % for 10 s with a duty cycle duration of 300 s.

4) The base-load current I_H is based on a duty cycle of 150 % for 60 s or 160 % for 10 s with a duty cycle duration of 300 s.

5) Information regarding the correlation between the pulse frequency and maximum output current/output frequency is provided in the SINAMICS Low Voltage Engineering Manual.

6) The specified power loss represents the maximum value at 100 % utilization. The value is lower under normal operating conditions.

7) The connection clips are included in the scope of supply of the Braking Module.

8) Total of all motor cables and DC link. Longer cable lengths for specific configurations are available on request.
For additional information, please refer to the SINAMICS Low Voltage Engineering Manual.

© Siemens 2024

Mounting device for power blocks

Overview

Power block mounting device for installing and removing the power blocks for the Basic Line Modules, Smart Line Modules, Active Line Modules, Power Modules, and Motor Modules in chassis format.

The mounting device is a mounting aid. It is placed in front of the module and attached to the module. The telescopic rails allow the device to be adjusted to the installation height of the power blocks.

Once the mechanical and electrical connections have been released, the Power block can be removed from the module.

The power block is guided and supported by the guide rails on the handling device.

Selection and ordering data

Description	Article No.
Mounting device for installing and removing power blocks	**6SL3766-1FA00-0AA0**

© Siemens 2024

Overview

The SINAMICS S120 liquid-cooled units are specifically designed to address the requirements relating to liquid cooling; they are characterized by their high power density and optimized footprint. Liquid cooling dissipates heat much more efficiently than air cooling systems. As a result, liquid-cooled units are much more compact than air-cooled units with the same power rating. Since the heat losses generated by the electronic components are almost completely dissipated by the liquid coolant, only very small cooling fans are required. This means that the devices are quiet in operation. Due to their compact dimensions and almost negligible cooling air requirement, liquid-cooled units are the preferred solution wherever installation space is restricted and/or the ambient operating conditions are rough.

Control cabinets with liquid cooling are easy to implement as sealed units with degrees of protection of IP55.

The product portfolio includes the following liquid-cooled SINAMICS S120 chassis units:

- Power Modules
- Basic Line Modules
- Active Line Modules
- Active Interface Modules
- Motor Modules

The associated system components such as line filters, line reactors, motor reactors, dv/dt filters plus VPL and sine-wave filters are air-cooled. Active Interface Modules are available in air-cooled and liquid-cooled versions.

Highlights of the liquid-cooled units

- Up to a 60 % smaller footprint than air-cooled drive converters
- All main components such as power semiconductors, DC link capacitors and balancing resistors are cooled by the cooling circuit
- Only a low flow rate is required
- Uniform pressure drop of 0.7 bar
- Automatic protective functions
- Nickel-plated busbars
- Low noise
- Compatible with all components and functions and tools of the SINAMICS system family
- The power rating can be extended by connecting units in parallel
- No equipment fans

Cabinet units in liquid-cooled version

Liquid-cooled SINAMICS S120 units are also available as cabinet units, including cooling system (Heat Exchanger Module). See section SINAMICS S120 Cabinet Modules → Liquid-cooled units.

© Siemens 2024

Overview

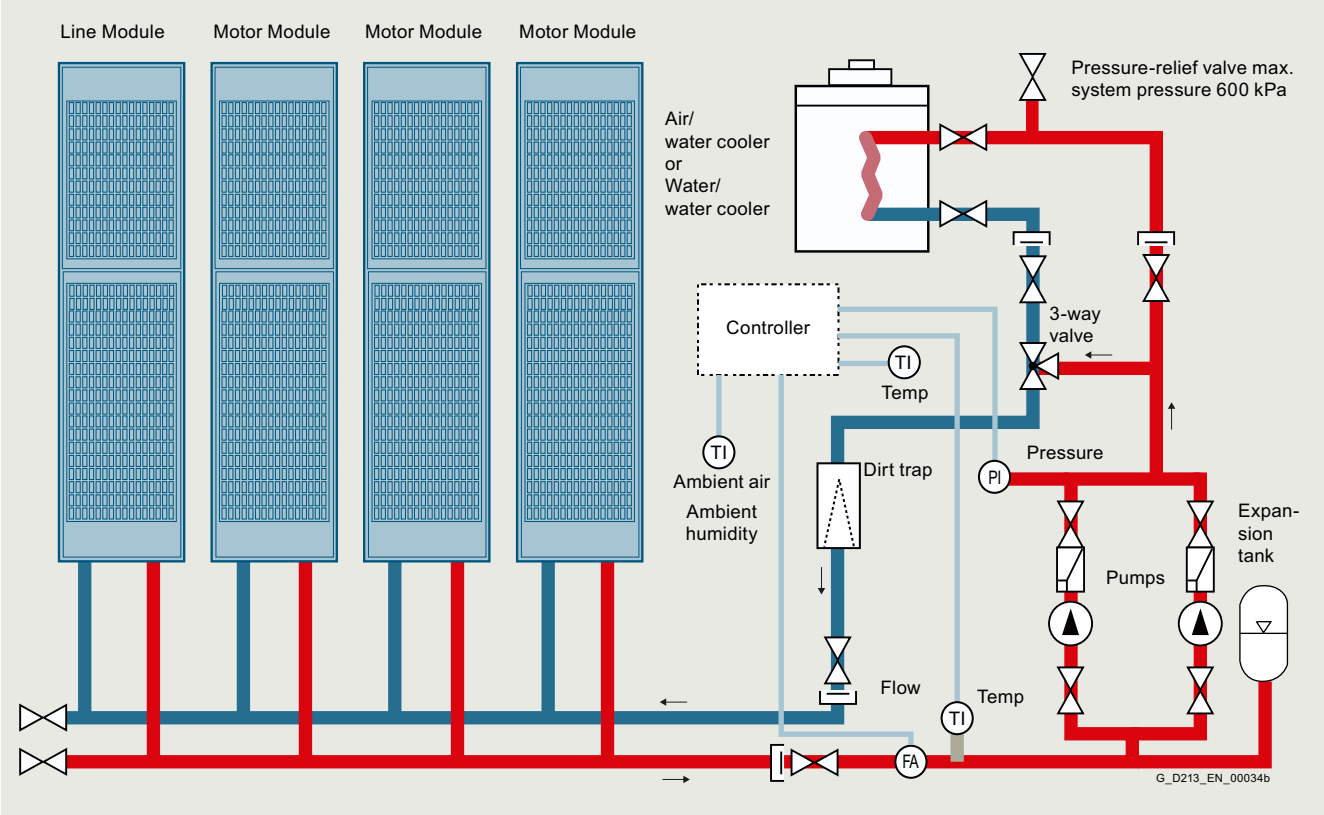

Example of a drive line-up with SINAMICS S120 liquid-cooled units

Technical specifications

General technical specifications

Unless clearly specified otherwise, the following technical data are valid for all the following components of the liquid-cooled SINAMICS S120 drive system in chassis format.

Electrical specifications	
Line voltages	380 ... 480 V 3 AC ±10 % (-15 % <1 min) 500 ... 690 V 3 AC ±10 % (-15 % <1 min)
Line supply types	Grounded TN/TT systems and non-grounded IT systems
Line frequency	47 ... 63 Hz
Overvoltage category	III acc. to EN 61800-5-1
Electronics power supply	24 V DC, -15 % +20 % implemented as PELV circuit in accordance with EN 61800-5-1 Ground = negative pole grounded via the electronics
Rated short-circuit current per IEC, in conjunction with the specified fuses or circuit breakers	
• 1.1 ... 447 kW	65 kA
• 448 ... 671 kW	84 kA
• 672 ... 1193 kW	170 kA
• > 1194 kW	200 kA
Rated short-circuit current SCCR (Short Circuit Current Rating) according to UL508C (up to 600 V), in conjunction with the specified fuses or circuit breakers	
• 1.1 ... 447 kW	65 kA
• 448 ... 671 kW	84 kA
• 672 ... 1193 kW	170 kA
• > 1194 kW	200 kA

© Siemens 2024

Technical specifications

Electrical specifications			
Control method	Vector/Servo control with and without encoder or V/f control		
Fixed speeds	15 fixed speeds plus 1 minimum speed, parameterizable (in the default setting, 3 fixed setpoints plus 1 minimum speed are selectable using terminal strip/PROFIBUS/PROFINET)		
Skippable speed ranges	4, parameterizable		
Setpoint resolution	0.001 r/min digital (14 bits + sign) 12 bits analog		
Braking operation	With Active Line Modules, four-quadrant operation as standard (energy recovery). With Basic Line Modules, two-quadrant operation as standard, braking by means of a Motor Module.		
Mechanical specifications			
Degree of protection	IP00 (IP20, without taking into account the connecting busbars)		
Protection class	I acc. to EN 61800-5-1		
Touch protection	EN 50274/DGUV regulation 3 when used as intended		
Cooling method	Liquid cooling with integrated heat exchanger in aluminum or stainless steel version		
Ambient conditions	**Storage** [1]	**Transport** [1]	**Operation**
Ambient temperature (air)	-25 ... +55 °C (-13 ... 131 °F) Class 1K4 acc. to EN 60721-3-1 (1997)	-25 ... +70 °C (-13 ... +158 °F) Class 2K4 acc. to EN 60721-3-2 (1997)	Line-side components, Power Modules, Line Modules and Motor Modules: 0 ... 45 °C (32 ... 113 °F) without derating >45 ... 50 °C (113 ... 122 °F) see derating characteristics Control Units, supplementary system components, and Sensor Modules: 0 ... 55 °C (32 ... 131 °F) (for operation in a control cabinet) DC link components and motor-side components: 0 ... 55 °C (32 ... 131 °F)
Relative humidity Condensation, splashwater, and ice formation not permitted (EN 60204, Part 1)	5 ... 95 % Class 1K4 acc. to EN 60721-3-1 (1997)	Max. 95 % at 40 °C (104 °F) Class 2K4 acc. to EN 60721-3-2 (1997)	5 ... 95 % Class 3K3 acc. to EN 60721-3-3 (2002)
Environmental class/harmful chemical substances	Class 1C2 acc. to EN 60721-3-1 (1997)	Class 2C2 acc. to EN 60721-3-2 (1997)	Class 3C2 acc. to EN 60721-3-3 (2002)
Organic/biological influences	Class 1B1 acc. to EN 60721-3-1 (1997)	Class 2B1 acc. to EN 60721-3-2 (1997)	Class 3B1 acc. to EN 60721-3-3 (2002)
Mechanically active substances	Class 1S1 acc. to EN 60721-3-1 (1997)	Class 2S1 acc. to EN 60721-3-2 (1997)	Class 3S1 acc. to EN 60721-3-3 (2002)
Degree of pollution	2 acc. to IEC/EN 61800-5-1		
Installation altitude	Up to 2000 m (6562 ft) above sea level without derating, > 2000 m (6562 ft) above sea level, refer to the derating data		
Mechanical stability	**Storage** [1]	**Transport** [1]	**Operation**
Vibratory load		Class 2M2 acc. to EN 60721-3-2 (1997)	Test values acc. to EN 60068-2-6 test Fc: • 10 ... 58 Hz with constant deflection 0.075 mm • 58 ... 150 Hz with constant acceleration 9.81 m/s^2 (1 × *g*)
Shock load		Class 2M2 acc. to EN 60721-3-2 (1997)	Test values acc. to EN 60068-2-27 test Ea: 98 m/s^2 (10 × *g*)/20 ms
Compliance with standards			
Conformances/certificates of suitability, according to	CE (EMC Directive 2014/30/EU, Low Voltage Directive 2014/35/EU, and Machinery Directive 2006/42/EC for functional safety) RCM, RoHS II, marine certification DNV, ABS, CCS (Type approval) Green passport: The article number 6SL3095-5AA00-0BG0 creates a form for the material declaration according to Green Passport. The subject matter of the declaration described is in line with the guidelines for the establishment of the inventory of hazardous materials - Resolution MEPC.269(68). cULus (only for devices connected to line voltages 380 ... 480 V 3 AC and 500 ... 600 V 3 AC)		
Radio interference suppression	SINAMICS S120 chassis format units are not designed for connection to the public grid (first environment). Radio interference suppression is compliant with the EMC product standard for variable-speed drives EN 61800-3, "second environment" (industrial line supplies). EMC disturbances can occur when connected to the public grid. For further information, see section Engineering information.		

Deviations from the specified class are underlined.

[1] In transport packaging.

© Siemens 2024

Technical specifications

Cooling circuit and coolant quality

The following tables and sections describe the quality requirements of the coolant used in the liquid-cooled SINAMICS S120 drive system in chassis format.

The coolant consists of a coolant basis and an additional antifreeze agent or inhibitor.
See "Antifreeze and inhibitors".

Cooling circuit	
• System pressure with reference to atmospheric pressure, max.	600 kPa
• Pressure drop at rated volumetric flow	70 kPa
• Recommended pressure range	80 ... 150 kPa (is applicable for water as coolant)
• Inlet temperature of liquid coolant	Dependent on ambient temperature, no condensation permitted
	0 ... 45 °C (32 ...113 °F) without derating
	>45 … 50 °C (113 ... 122 °F), see derating data
	Antifreeze essential for temperature range between 0 °C (32 °F) and 5 °C (41 °F)
Coolant quality	
Coolant basis for aluminum heat exchangers	Distilled, demineralized, completely desalinated water or deionized water with reduced electrical conductivity in accordance with ISO 3696, quality 3 or based on IEC 60993
• Electrical conductivity when filling	<30 µS/cm (3 mS/m)
• pH value	5 ... 8
• Components that can be oxidized as oxygen content	<30 mg/l
• Residue after vaporization and drying at 110 °C (230 °F)	<10 mg/kg
Coolant basis for stainless steel heat exchangers	Filtered drinking, process, and cooling water
• Electrical conductivity	<2500 µS/cm (250 mS/m)
• pH value	6.5 ... 9
• Total salt content TDS	<1550 mg/l
• Chloride (Cl^-)	<250 mg/l
• Sodium (Na^+)	<200 mg/l
• Sulfate (SO_4^{2-})	<240 mg/l
• Sulfide (S^{2-})	<1 mg/l
• Nitrate (NO_3^-)	<50 mg/l
• Iron	<1 mg/l
• Silicate	<10 mg/l
• Ammonia (NH_3), ammonium (NH_4^+)	<1 mg/l
• Total hardness with a maximum of	<1.78 mmol/l (10 °dH)
- Calcium hardness	<1.25 mmol/l (7 °dH), <57 mg/l calcium
- Magnesium hardness	< 1.43 mmol/l (8 °dH), <35 mg/l magnesium
- Carbonate hardness	<0.45 mmol/l (2.5 °dH)
• Suspended solids/suspended substances	
- Solids	<340 mg/l
- Size of entrained particles	<100 µm
	The coolant definition specified here should only be considered as recommendation. For units that have been shipped, the information and data provided in the equipment manual supplied should be observed!

Recommendation: Fill initially with demineralized water (via ion exchanger)

© Siemens 2024

Technical specifications

Antifreeze and inhibitors

Antifreeze	Antifrogen N	Antifrogen L	DOWCAL 100
Manufacturer	Clariant	Clariant	DOW
Chemical base	Ethylene glycol	Propylene glycol	Ethylene glycol
Minimum concentration	25 %	25 %	25 %
Antifreeze agent with minimum concentration	-10 °C (14 °F)	-10 °C (14 °F)	-10 °C (14 °F)
Maximum concentration	45 %	48 %	45 %
Antifreeze agent with maximum concentration	-30 °C (-22 °F)	-30 °C (-22 °F)	-30 °C (-22 °F)
Inhibitor content	Contains inhibitors with nitrites	Contains inhibitors that are free of nitrites, amines, borates and phosphates	Contains inhibitors that are free of nitrites, amines and phosphates
Biocide action with a concentration of	>25 %	>25 %	>25 %

Biocides prevent corrosion that is caused by slime-forming, corrosive or iron-depositing bacteria. These can occur in closed cooling circuits with low water hardness and in open cooling circuits. Biocides must always be selected according to the relevant bacterial risks. Compatibility with inhibitors or antifreeze used with them must be checked on a case-by-case basis.

Inhibitors	Antifrogen N	ANTICORIT S 2000 A
Manufacturer	Clariant	Fuchs
Chemical base	Ethylene glycol	–
Minimum concentration	25 %	4 %
Maximum concentration	45 %	5 %

Recommended service

The manufacturer of the inhibitor/antifreeze should analyze the coolant at least every two years. The concentration and boundary conditions of the inhibitor/antifreeze should be checked. It may be necessary to correct the concentration on the plant side.

Protection against condensation

With liquid-cooled units, warm air can condense on the cold surfaces of heat sinks, pipes and hoses. This condensation depends on the air humidity and the temperature difference between the ambient air and the coolant.

The water which is produced as a result of condensation can cause corrosion as well as electrical damage such as creepage shorts and flashovers. As the SINAMICS units cannot prevent condensation if it is caused by the prevailing climatic conditions, any potential risk of condensation must be prevented by appropriate engineering or by precautionary measures implemented by the customer. These measures include the following:

- a fixed coolant temperature that has been adjusted to the expected air humidity or ambient temperature ensures that critical differences between the coolant and ambient air temperatures do not develop or
- temperature regulation of the coolant as a function of the ambient air temperature

The temperature at which water vapor contained in the air condenses into water is known as the dew point. In order to reliably prevent condensation, the coolant temperature must always be higher than the **dew point**.

The table below specifies the dew point as a function of room temperature T and relative air humidity Φ for an atmospheric pressure of 100 kPa (1 bar). This corresponds to an installation altitude of 0 up to approximately 500 m above sea level. Since the dew point drops as the air pressure decreases, the dew point values at higher installation altitudes are lower than the specified table values. It is therefore the safest approach to engineer the coolant temperature according to the values in the table for an installation altitude of zero.

A detailed description of the cooling circuits and the recommended coolant is given in the SINAMICS Low Voltage Engineering Manual.

Specification of the dew point / coolant temperature

Room temperature	Relative air humidity Φ										
T	20 %	30 %	40 %	50 %	60 %	70 %	80 %	85 %	90 %	95 %	100 %
10 °C (50 °F)	<0 °C (<32 °F)	<0 °C (<32 °F)	<0 °C (<32 °F)	0.2 °C (32.4 °F)	2.7 °C (36.9 °F)	4.8 °C (40.6 °F)	6.7 °C (44.1 °F)	7.6 °C (45.7 °F)	8.4 °C (47.1 °F)	9.2 °C (48.6 °F)	10 °C (50 °F)
20 °C (68 °F)	<0 °C (<32 °F)	2 °C (35.6 °F)	6 °C (42.8 °F)	9.3 °C (48.7 °F)	12 °C (53.6 °F)	14.3 °C (57.7 °F)	16.4 °C (61.5 °F)	17.4 °C (63.3 °F)	18.3 °C (64.9 °F)	19.1 °C (66.4 °F)	20 °C (68 °F)
25 °C (77 °F)	0.6 °C (33.1 °F)	6.3 °C (43.3 °F)	10.5 °C (50.9 °F)	13.8 °C (56.8 °F)	16.7 °C (62.1 °F)	19.1 °C (66.4 °F)	21.2 °C (70.2 °F)	22.2 °C (72.0 °F)	23.2 °C (73.8 °F)	24.1 °C (75.4 °F)	24.9 °C (76.8 °F)
30 °C (86 °F)	4.7 °C (40.5 °F)	10.5 °C (50.9 °F)	14.9 °C (58.8 °F)	18.4 °C (65.1 °F)	21.3 °C (70.3 °F)	23.8 °C (74.8 °F)	26.1 °C (79.0 °F)	27.1 °C (80.8 °F)	28.1 °C (82.6 °F)	29 °C (84.2 °F)	29.9 °C (85.8 °F)
35 °C (95 °F)	8.7 °C (47.7 °F)	14.8 °C (58.6 °F)	19.3 °C (66.7 °F)	22.9 °C (73.2 °F)	26 °C (78.8 °F)	28.6 °C (83.5 °F)	30.9 °C (87.6 °F)	32 °C (89.6 °F)	33 °C (91.4 °F)	34 °C (93.2 °F)	34.9 °C (94.8 °F)
40 °C (104 °F)	12.8 °C (55.0 °F)	19.1 °C (66.4 °F)	23.7 °C (74.7 °F)	27.5 °C (81.5 °F)	30.6 °C (87.1 °F)	33.4 °C (92.1 °F)	35.8 °C (96.4 °F)	36.9 °C (98.4 °F)	37.9 °C (100 °F)	38.9 °C (102 °F)	39.9 °C (104 °F)
45 °C (113 °F)	16.8 °C (62.2 °F)	23.3 °C (73.9 °F)	28.2 °C (82.8 °F)	32 °C (89.6 °F)	35.3 °C (95.5 °F)	38.1 °C (101 °F)	40.6 °C (105 °F)	41.8 °C (107 °F)	42.9 °C (109 °F)	43.9 °C (111 °F)	44.9 °C (113 °F)
50 °C (122 °F)	20.8 °C (69.4 °F)	27.5 °C (81.5 °F)	32.6 °C (90.7 °F)	36.6 °C (97.9 °F)	40 °C (104 °F)	42.9 °C (109 °F)	45.5 °C (114 °F)	46.6 °C (116 °F)	47.8 °C (118 °F)	48.9 °C (120 °F)	49.9 °C (122 °F)

© Siemens 2024

Characteristic curves

Pressure drop

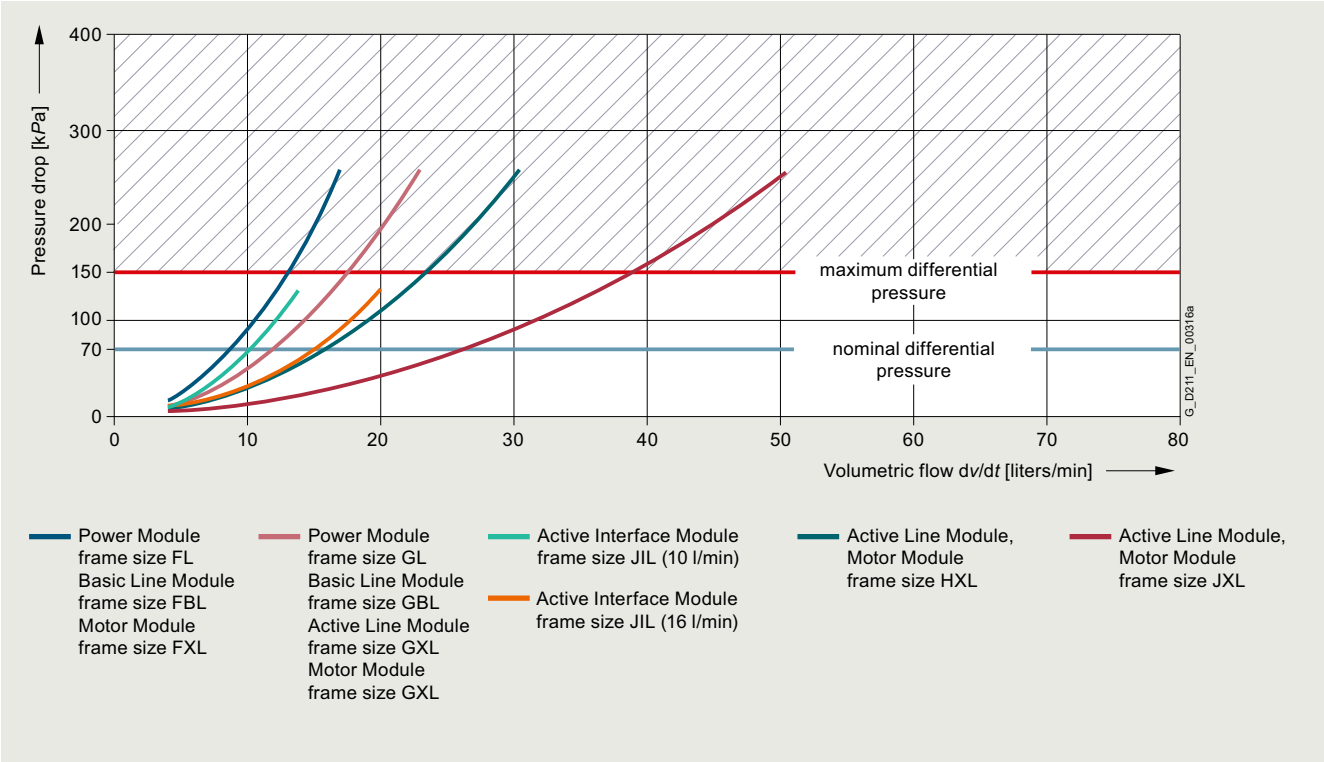

Pressure drop for liquid-cooled built-in units in chassis format

The pressure drop characteristics are valid for water. If anti-freeze is used, the characteristics typically shift to the left.

For further information, please refer to the SINAMICS Low Voltage Engineering Manual.

© Siemens 2024

Characteristic curves

Derating

Liquid-cooled SINAMICS S120 chassis format units are rated for an ambient temperature of 45 °C and installation altitudes up to 2000 m above sea level. At ambient temperatures > 45 °C, the output current must be reduced. Ambient temperatures above 50 °C are not permissible. At installation altitudes > 2000 m above sea level, it must be taken into account that the air pressure, and therefore air density, decreases as the height increases. As a consequence, the cooling efficiency and the insulation capacity of the air also decrease.

At installation altitudes above 2000 m, the line voltage must not exceed certain limits in order to be able to isolate the surge voltages according to IEC 61800-5-1 for overvoltage category III. If the line voltage is above this limit at installation altitudes > 2000 m, measures must be taken to reduce the transient overvoltages of Category III to values of Category II, e. g. supply of the devices via an isolating transformer.
For additional information, please refer to the SINAMICS Low Voltage Engineering Manual.

In order to prevent condensation, the inlet temperature of the liquid coolant should be kept above the ambient temperature depending on the relative air humidity.

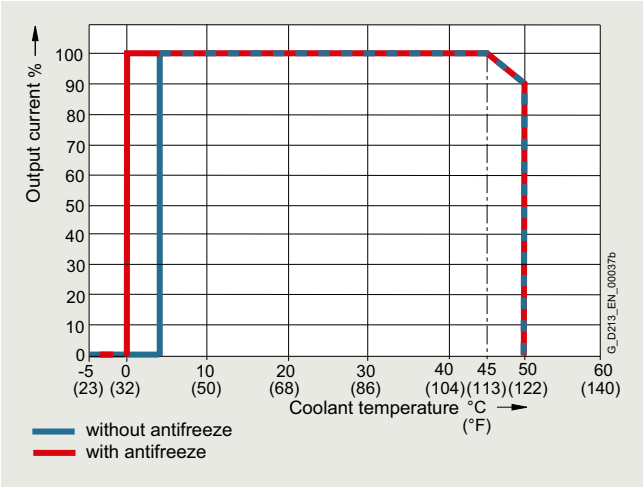

Current derating as a function of the temperature of the cooling liquid [1)]

The inlet temperature of the liquid coolant depends on the ambient temperature, no condensation permitted.

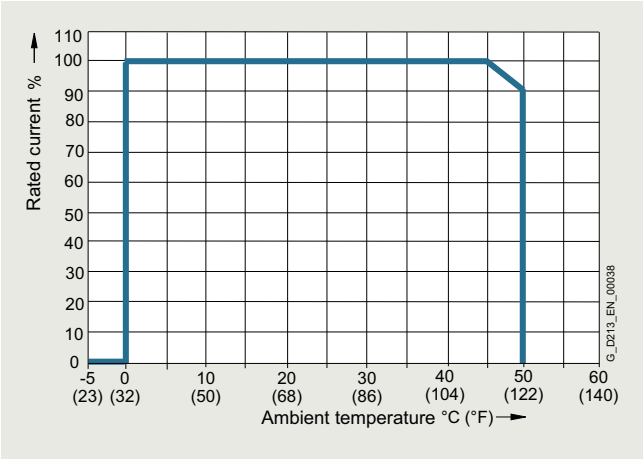

Current derating as a function of ambient temperature [1)]

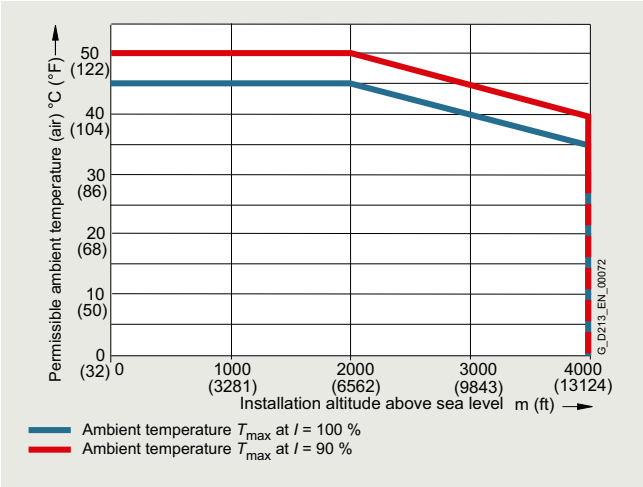

Permissible ambient temperature as a function of installation altitude

[1)] The factors of the two curves must not be multiplied. The highest value in each case must be assumed for the purposes of calculation, so that the derating factor in the worst-case scenario is 0.9.

© Siemens 2024

Characteristic curves

Current derating as a function of the pulse frequency

To reduce motor noise or to increase output frequency, the pulse frequency can be increased relative to the factory setting (1.25 kHz or 2 kHz). When the pulse frequency is increased, the derating factor of the output current must be taken into account. This derating factor must be applied to the currents specified in the technical specifications.

For additional information, please refer to the SINAMICS Low Voltage Engineering Manual.

The following tables list the rated output currents of the Power Modules and Motor Modules with pulse frequency set in the factory as well as the current derating factors (permissible output currents referred to the rated output current) for higher pulse frequencies.

Derating factor of the output current as a function of the pulse frequency for units with a rated pulse frequency of 2 kHz

Power Module Motor Module	Type rating at 400 V	Output current at 2 kHz	**Derating factor** at pulse frequency				
6SL3315-... 6SL3325-...	kW	A	2.5 kHz	4 kHz	5 kHz	7.5 kHz	8 kHz
380 ... 480 V 3 AC							
1TE32-1AA3	110	210	95 %	82 %	74 %	54 %	50 %
1TE32-6AA3	132	260	95 %	83 %	74 %	54 %	50 %
1TE33-1AA3	160	310	97 %	88 %	78 %	54 %	50 %
1TE35-0AA3	250	490	94 %	78 %	71 %	53 %	50 %
1TE41-4AS3 [1]	800	1330	88 %	55 %	–	–	–

Derating factor of the output current as a function of the pulse frequency for Motor Modules with a rated pulse frequency of 1.25 kHz

Motor Module	Type rating at 400 V or 690 V	Output current at 1.25 kHz	**Derating factor** at pulse frequency					
6SL3325-...	kW	A	2 kHz	2.5 kHz	4 kHz	5 kHz	7.5 kHz	8 kHz
380 ... 480 V 3 AC								
1TE36-1AA3	315	605	83 %	72 %	64 %	60 %	40 %	36 %
1TE37-5AA3	400	745	87 %	79 %	64 %	55 %	40 %	37 %
1TE38-4AA3	450	840	87 %	79 %	64 %	55 %	40 %	37 %
1TE41-0AA3	560	985	92 %	87 %	70 %	60 %	50 %	47 %
1TE41-2AA3	710	1260	97 %	95 %	74 %	60 %	50 %	47 %
1TE41-4AA3	800	1405	97 %	95 %	74 %	60 %	50 %	47 %
500 ... 690 V 3 AC								
1TG31-0AA3	90	100	92 %	88 %	71 %	60 %	40 %	–
1TG31-5AA3	132	150	90 %	84 %	66 %	55 %	35 %	–
1TG32-2AA3	200	215	92 %	87 %	70 %	60 %	40 %	–
1TG33-3AA3	315	330	89 %	82 %	65 %	55 %	40 %	–
1TG34-7AA3	450	465	92 %	87 %	67 %	55 %	35 %	–
1TG35-8AA3	560	575	91 %	85 %	64 %	50 %	35 %	–
1TG37-4AA3	710	735	84 %	74 %	53 %	40 %	25 %	–
1TG38-0AA3 [2]	800	810	82 %	71 %	52 %	40 %	25 %	–
1TG38-1AA3	800	810	97 %	95 %	71 %	55 %	35 %	–
1TG41-0AA3	1000	1025	91 %	86 %	64 %	50 %	30 %	–
1TG41-3AA3	1200	1270	87 %	79 %	55 %	40 %	25 %	–
1TG41-6AP3	1500	1560	87 %	79 %	55 %	40 %	25 %	–

[1] This Motor Module has been specifically designed for loads demanding a high dynamic performance. The derating factor k_{IGBT} and the derating characteristics can be ignored (see section "Duty cycles" in the SINAMICS Low Voltage Engineering Manual).

[2] The Motor Module 6SL3325-1TG38-0AA3 is optimized for low overload; with an increased pulse frequency, the derating factor is higher than for the Motor Module 6SL3325-1TG38-1AA3.

© Siemens 2024

Characteristic curves

Maximum output frequencies achieved by increasing the pulse frequency

The adjustable pulse frequencies – and therefore the output frequencies that can be achieved with the factory-set current controller clock cycles – are listed below.

Current controller clock cycle T_I	Adjustable pulse frequency f_p	Max. achievable output frequency f_A		
		V/f mode	Vector mode	Servo mode
250 µs [1]	2 kHz	166 Hz	166 Hz	333 Hz
	4 kHz	333 Hz	333 Hz	550 Hz [3]
	8 kHz	550 Hz [3]	480 Hz	550 Hz [3]
400 µs [2]	1.25 kHz	104 Hz	104 Hz	–
	2.5 kHz	208 Hz	208 Hz	–
	5.0 kHz	416 Hz	300 Hz	–
	7.5 kHz	550 Hz [3]	300 Hz	–

[1] As factory setting, the following devices have a current controller clock cycle of 250 µs and a pulse frequency of 2 kHz:
- 380 ... 480 V 3 AC: ≤ 250 kW / 490 A, 6SL3325-1TE41-4AS3

[2] As factory setting, the following devices have a current controller clock cycle of 400 µs and a pulse frequency of 1.25 kHz:
- 380 ... 480 V 3 AC: ≥315 kW / 605 A, except 6SL3325-1TE41-4AS3
- 500 ... 690 V 3 AC: All power ratings

[3] With the "High output frequencies" license, which can be ordered as option J01 on the CompactFlash card for SINAMICS S120, the maximum output frequency is increased up to 650 Hz. For more information, see https://support.industry.siemens.com/cs/document/104020669

© Siemens 2024

Characteristic curves

Overload capability

Liquid-cooled SINAMICS S120 units have an overload reserve, e.g. to handle breakaway torques. If larger surge loads occur, this must be taken into account in the configuration. For drives with overload requirements, the appropriate base load current must, therefore, be used as a basis for the required load.

The permissible overload levels are valid under the prerequisite that the drive units are operated with their base-load current before and after the overload condition based on a duty cycle duration of 300 s.

Another precondition is that the Power Modules or the Motor Modules are operated at their factory-set pulse frequency at output frequencies > 10 Hz.

For temporary, periodic duty cycles with high variations of load within the duty cycle, the relevant sections of the SINAMICS Low Voltage Engineering Manual must be observed.

Power Modules and Motor Modules

The base-load current for a low overload I_L is the basis for a duty cycle of 110 % for 60 s or 150 % for 10 s.

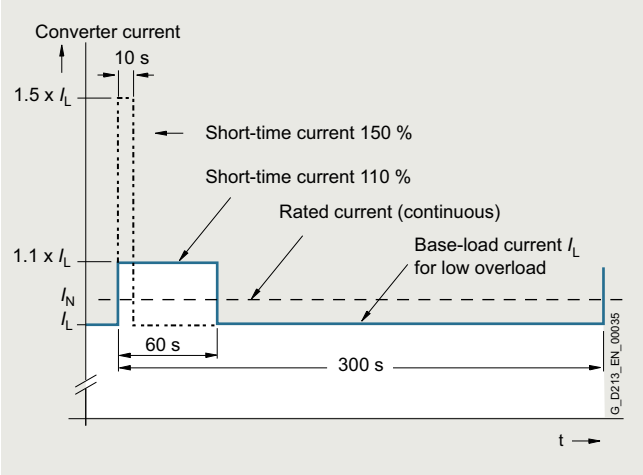

Low overload

The base-load current I_H for a high overload is based on a load cycle of 150 % for 60 s or 160 % for 10 s.

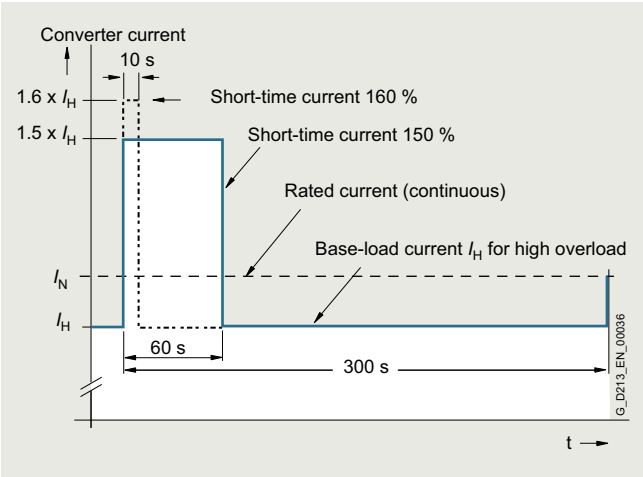

High overload

The following applies to the Motor Module 6SL3325-1TG41-6AP3:

This Motor Module is particularly suited to high breakaway torques with applications such as drilling, mixers, centrifuges, and test bays. An **additional** duty cycle is required at output frequencies of 5 Hz to 10 Hz.
At output frequencies of 1 Hz to 5 Hz, the short-time current is 1900 A for 5 s.

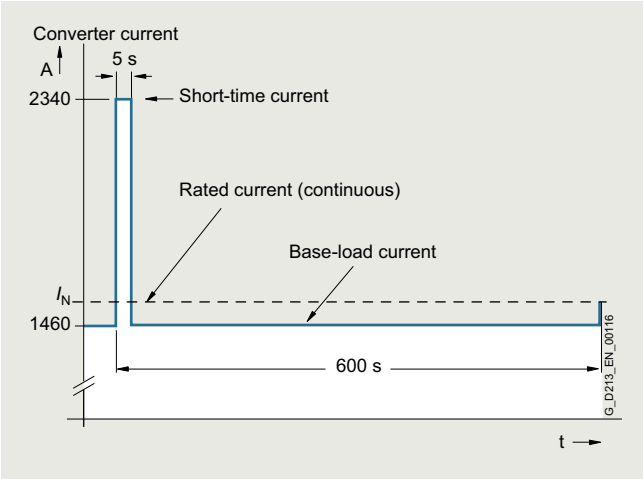

High overload for Motor Module 6SL3325-1TG41-6AP3

Line Modules

The base-load current for a high overload $I_{H\,DC}$ is the basis for a duty cycle of 150 % for 60 s or $I_{max\,DC}$ for 5 s.

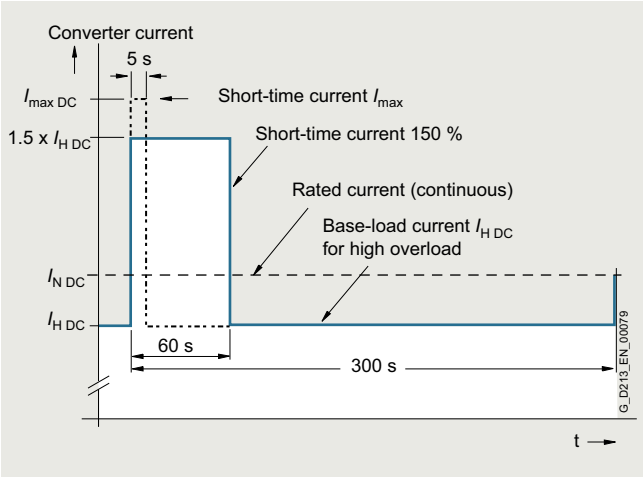

High overload

© Siemens 2024

Overview

The Power Module comprises a line rectifier, a DC link and an inverter to supply the motor.

Power Modules are designed for drives that are not capable of regenerating energy to the mains supply. If the motor produces energy during braking, a Braking Module with braking resistors will be required.

Liquid-cooled Power Modules are especially suitable for applications where installation space is restricted and environmental conditions are harsh. Liquid cooling ensures efficient heat dissipation.

Power Modules in the chassis format can be connected to grounded TN/TT systems and non-grounded IT systems.

Design

The liquid-cooled Power Modules have the following interfaces as standard:

- 1 line supply connection
- 1 motor connection
- 1 connection for the 24 V DC electronics power supply
- 1 DC link connection
- 3 DRIVE-CLiQ sockets
- 1 temperature sensor input for KTY84-130, Pt1000, PTC or Pt100 (Pt1000 can be used from firmware V4.7 HF17 and higher)
- 1 connection for Safe Brake Adapter
- 1 connection for Safety Integrated
- 2 PE/protective conductor connections
- 2 coolant connections

The CU310-2 Control Unit can be integrated into the liquid-cooled Power Modules.

The status of the Power Modules is indicated via three LEDs.

The scope of supply of the Power Modules includes:

- 1 DRIVE-CLiQ cable for connection to the CU310-2 Control Unit
- 1 mounting plate for attaching the CU310-2 Control Unit
- 2 seals for coolant connections
- 1 set of warning labels in 30 languages (BG, CN, CZ, DE, DK, EE, ES, FI, FR, GB, GR, HU, IE, IS, IT, JP, KR, LT, LV, MT, NL, NO, PL, PT, RO, RU, SE, SI, SK, TR)

Use in multi-axis systems

Power Modules in chassis format can also be connected directly via DRIVE-CLiQ to a separate CU320-2 or SIMOTION D4x5-2 Control Unit or Controller Extension CX32-2. The appropriate DRIVE-CLiQ cable for the required distance must be ordered (see section Connection system).

Selection and ordering data

Type rating at 400 V	Rated output current	**Power Module**
kW	A	Article No.
Line voltage 380 ... 480 V 3 AC		
110	210	**6SL3315-1TE32-1AA3**
132	260	**6SL3315-1TE32-6AA3**
160	310	**6SL3315-1TE33-1AA3**
250	490	**6SL3315-1TE35-0AA3**

Extension of warranty

Siemens offers for SINAMICS S120 chassis units an extension of warranty/Service Protect up to 6½ years.

Details can be found in chapter Services and Documentation

Accessories

Description	Article No.
3-way valve [1]	**VXF41...** **VXG41...**
Actuator for 3-way valve [1] • 230 V 1 AC • 24 V AC/DC	 **SAX31...** **SAX61...** **SAX81...**
Accessories for re-ordering	
Dust protection blanking plugs (50 units) For DRIVE-CLiQ port	**6SL3066-4CA00-0AA0**

For additional information, refer to the manual.

For line-side and motor-side components, see System components.

[1] Recommended components for installing a flow control as condensation protection; manufactured by Siemens Building Technologies.

© Siemens 2024

Integration

The Power Modules communicate with the higher-level control module via DRIVE-CLiQ. The Control Unit in this case could be a CU310-2, CU320-2 or a SIMOTION D Control Unit. An external 24 V DC power supply is required to operate liquid-cooled Power Modules.

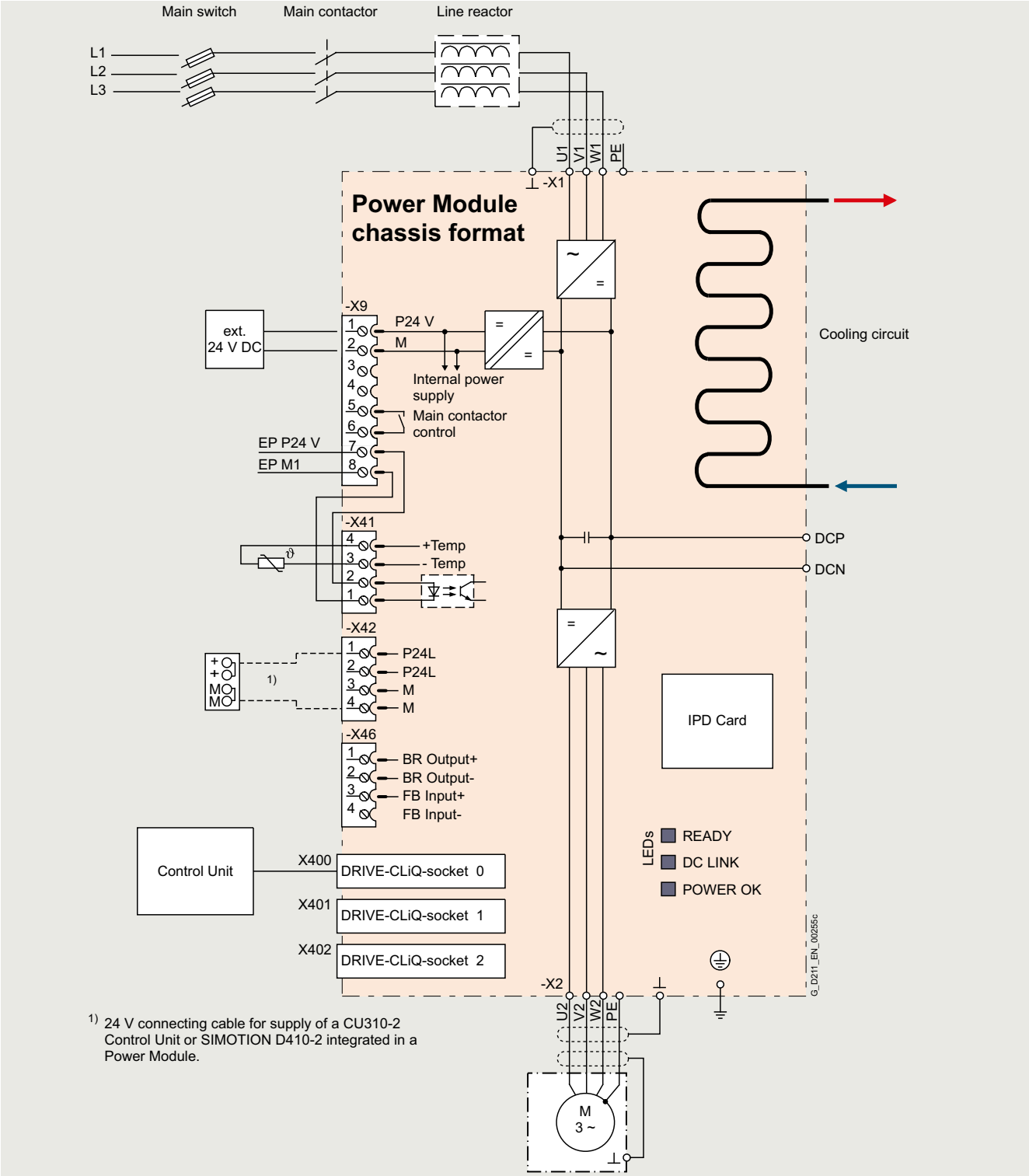

1) 24 V connecting cable for supply of a CU310-2 Control Unit or SIMOTION D410-2 integrated in a Power Module.

Connection example, liquid-cooled Power Module in the chassis format

Note:
The integrated 24 V power supply at connector X42 can have a maximum load of 2 A. When the Control Unit is supplied from the integrated power supply, the total load of the digital outputs must be carefully observed to ensure that the 2 A is not exceeded.

© Siemens 2024

Technical specifications

General technical specifications

Electrical specifications	
Line connection voltage Up to 2000 m (6562 ft) above sea level	380 … 480 V 3 AC ±10 % (-15 % < 1 min)
Line power factor for a 3 AC line supply voltage and rated output • Basic fundamental (cos φ_1) • Total (λ)	 >0.96 0.75 ... 0.93
Efficiency	> 98 %
DC link voltage, approx.	1.35 × line voltage
Output voltage, approx.	0 ... 0.97 × U_{line}
Output frequency [1] • Control mode Servo • Control mode Vector • Control mode V/f	 0 ... 550 Hz 0 ... 550 Hz 0 ... 550 Hz
Electronics power supply	24 V DC -15 %/+20 %
Main contactor control • Terminal strip -X9/5-6	 240 V AC, max. 8 A 30 V DC, max. 1 A
Safety Integrated	Safety Integrity Level 2 (SIL2) acc. to IEC 61508, Performance Level d (PLd) acc. to EN ISO 13849-1 and Control Category 3 acc. to EN ISO 13849-1.

[1] Please note:
- The correlation between the maximum output frequency, pulse frequency and current derating. Higher output frequencies on request. For further information, see https://support.industry.siemens.com/cs/document/104020669
- The correlation between the minimum output frequency and permissible output current (current derating). For additional information, please refer to the SINAMICS Low Voltage Engineering Manual.

© Siemens 2024

Technical specifications

Line voltage 380 V ... 480 V 3 AC		Power Modules			
		6SL3315-1TE32-1AA3	6SL3315-1TE32-6AA3	6SL3315-1TE33-1AA3	6SL3315-1TE35-0AA3
Type rating					
• At I_L (50 Hz 400 V) [1]	kW	**110**	**132**	**160**	**250**
• At I_H (50 Hz 400 V) [1]	kW	90	110	132	200
• At I_L (60 Hz 460 V) [2]	hp	150	200	250	400
• At I_H (60 Hz 460 V) [2]	hp	150	200	200	350
Output current					
• Rated current $I_{N\,O}$	A	210	260	310	490
• Base-load current I_L [3]	A	205	250	302	477
• Base-load current I_H [4]	A	178	233	277	438
• Max. output current $I_{max\,O}$	A	307	375	453	715
Input current					
• Rated current $I_{N\,I}$	A	230	285	340	540
• Maximum current $I_{max\,I}$	A	336	411	496	788
Current demand					
• 24 V DC auxiliary power supply	A	1.4	1.4	1.5	1.5
Pulse frequency [5]					
• Rated frequency	kHz	2	2	2	2
• Pulse frequency, max.					
- Without current derating	kHz	2	2	2	2
- With current derating	kHz	8	8	8	8
Power loss, at 50 Hz 400 V [6]					
• Dissipated to coolant	kW	2.34	2.95	3.28	5.25
• Dissipated to ambient air	kW	0.08	0.09	0.12	0.18
• Total	kW	2.42	3.04	3.4	5.43
Coolant volume flow [7]	l/min (US gal./min)	9 (2.38)	9 (2.38)	12 (3.17)	12 (3.17)
Liquid volume of the integrated heat exchanger	dm^3	0.52	0.52	0.88	0.88
Pressure drop, typ. [8] for volume flow	Pa	70000	70000	70000	70000
Heat exchanger material		Stainless steel	Stainless steel	Stainless steel	Stainless steel
Coolant connections Intake/return		Pipe thread ISO 228 G 3/4 B (external thread 3/4", flat-sealing)			
Sound pressure level L_{pA} (1 m) at 50/60 Hz	dB	52	52	52	52
Line supply connection U1, V1, W1		Hole for M12	Hole for M12	Hole for M12	Hole for M12
• Conductor cross-section, max. (IEC)	mm^2	2 × 95	2 × 95	2 × 240	2 × 240
DC link connection DCP, DCN		Hole for M12	Hole for M12	Hole for M12	Hole for M12
• Conductor cross-section, max. (IEC)	mm^2	2 × 95	2 × 95	2 × 240	2 × 240
Motor connection U2/T1, V2/T2, W2/T3		Hole for M12	Hole for M12	2 × hole for M12	2 × hole for M12
• Conductor cross-section, max. (IEC)	mm^2	2 × 95	2 × 95	2 × 240	2 × 240
Cable length, max. [9]					
• Shielded	m (ft)	300 (984)	300 (984)	300 (984)	300 (984)
• Unshielded	m (ft)	450 (1476)	450 (1476)	450 (1476)	450 (1476)
PE/GND connection		2 × hole for M12	2 × hole for M12	2 × hole for M12	2 × hole for M12
• Conductor cross-section, max. (IEC)	mm^2	2 × 95	2 × 95	2 × 240	2 × 240
Dimensions					
• Width	mm (in)	265 (10.4)	265 (10.4)	265 (10.4)	265 (10.4)
• Height	mm (in)	836 (32.9)	836 (32.9)	983 (38.7)	983 (38.7)
• Depth	mm (in)	549 (21.6)	549 (21.6)	549 (21.6)	549 (21.6)
Weight, approx.	kg (lb)	77 (170)	77 (170)	108 (238)	108 (238)
Frame size		FL	FL	GL	GL
Minimum short-circuit current [10]	kA	3	3.6	4.4	8

1) Rated power of a typical 6-pole standard induction motor based on I_L or I_H for 400 V 3 AC 50 Hz.

2) Rated power of a typical 6-pole standard induction motor based on I_L or I_H for 460 V 3 AC 60 Hz.

3) The base-load current I_L is based on a duty cycle of 110 % for 60 s or 150 % for 10 s with a duty cycle duration of 300 s.

4) The base-load current I_H is based on a duty cycle of 150 % for 60 s or 160 % for 10 s with a duty cycle duration of 300 s.

5) Information regarding the correlation between the pulse frequency and maximum output current/output frequency is provided in the SINAMICS Low Voltage Engineering Manual.

6) The specified power loss represents the maximum value at 100 % utilization. The value is lower under normal operating conditions. To ensure safe dissipation of the minor power loss released to the ambient air, it is important to follow the instructions pertaining to control cabinet installation in the SINAMICS Low Voltage Engineering Manual.

7) The value applies to coolants comprising water and a mixture of water and antifreeze agent.

8) The value is valid for water as coolant.
Additional information and notes on other coolants are provided in the SINAMICS Low Voltage Engineering Manual.

9) Longer cable lengths for specific configurations are available on request.
For additional information, please refer to the SINAMICS Low Voltage Engineering Manual.

10) Current required for reliably triggering protective devices.

© Siemens 2024

Overview

Basic Line Modules are used for applications where energy is not fed back into the line supply or where energy is exchanged in the DC link between axes operating in the motor and generator modes. The connected Motor Modules are pre-charged via the thyristor gate control. Basic Line Modules are designed for connection to grounded TN/TT and non-grounded IT supply systems.

Liquid-cooled Basic Line Modules are especially suitable for applications where installation space is restricted and environmental conditions are harsh. Liquid cooling ensures efficient heat dissipation.

Design

The liquid-cooled Basic Line Modules have the following interfaces as standard:

- 1 line supply connection
- 1 connection for the 24 V DC electronics power supply
- 1 DC link connection (DCP, DCN) for supplying the connected Motor Modules
- 3 DRIVE-CLiQ sockets
- 1 temperature sensor input for KTY84-130, Pt1000, PTC or Pt100 (Pt1000 can be used from firmware V4.7 HF17 and higher)
- 1 PE/protective conductor connection
- 2 coolant connections

The status of the Basic Line Modules is indicated via three LEDs.

The scope of supply of the Power Modules includes:

- 1 DRIVE-CLiQ cable for connection to the Control Unit
- 2 seals for coolant connections
- 1 set of warning labels in 30 languages (BG, CN, CZ, DE, DK, EE, ES, FI, FR, GB, GR, HU, IE, IS, IT, JP, KR, LT, LV, MT, NL, NO, PL, PT, RO, RU, SE, SI, SK, TR)

Selection and ordering data

Rated power at 400 V or 690 V	Rated DC link current	**Basic Line Module**
kW	A	Article No.
Line voltage 380 ... 480 V 3 AC		
360	740	**6SL3335-1TE37-4AA3**
600	1220	**6SL3335-1TE41-2AA3**
830	1730	**6SL3335-1TE41-7AA3**
Line voltage 500 ... 690 V 3 AC		
355	420	**6SL3335-1TG34-2AA3**
630	730	**6SL3335-1TG37-3AA3**
1100	1300	**6SL3335-1TG41-3AA3**
1370	1650	**6SL3335-1TG41-7AA3**

Extension of warranty

Siemens offers for SINAMICS S120 chassis units an extension of warranty/Service Protect up to 6½ years.

Details can be found in chapter Services and Documentation

Accessories

Description	Article No.
3-way valve [1]	**VXF41...** **VXG41...**
Actuator for 3-way valve [1] • 230 V 1 AC • 24 V AC/DC	 **SAX31...** **SAX61...** **SAX81...**
Accessories for re-ordering	
Dust protection blanking plugs (50 units) For DRIVE-CLiQ port	**6SL3066-4CA00-0AA0**

For line-side components, see System components.

[1] Recommended components for installing a flow control as condensation protection; manufactured by Siemens Building Technologies.

© Siemens 2024

Integration

The liquid-cooled Basic Line Modules communicate with the higher-level control module via DRIVE-CLiQ. The control module in this case can be a CU320-2 or a SIMOTION D Control Unit. An external 24 V DC power supply is required to operate liquid-cooled Basic Line Modules.

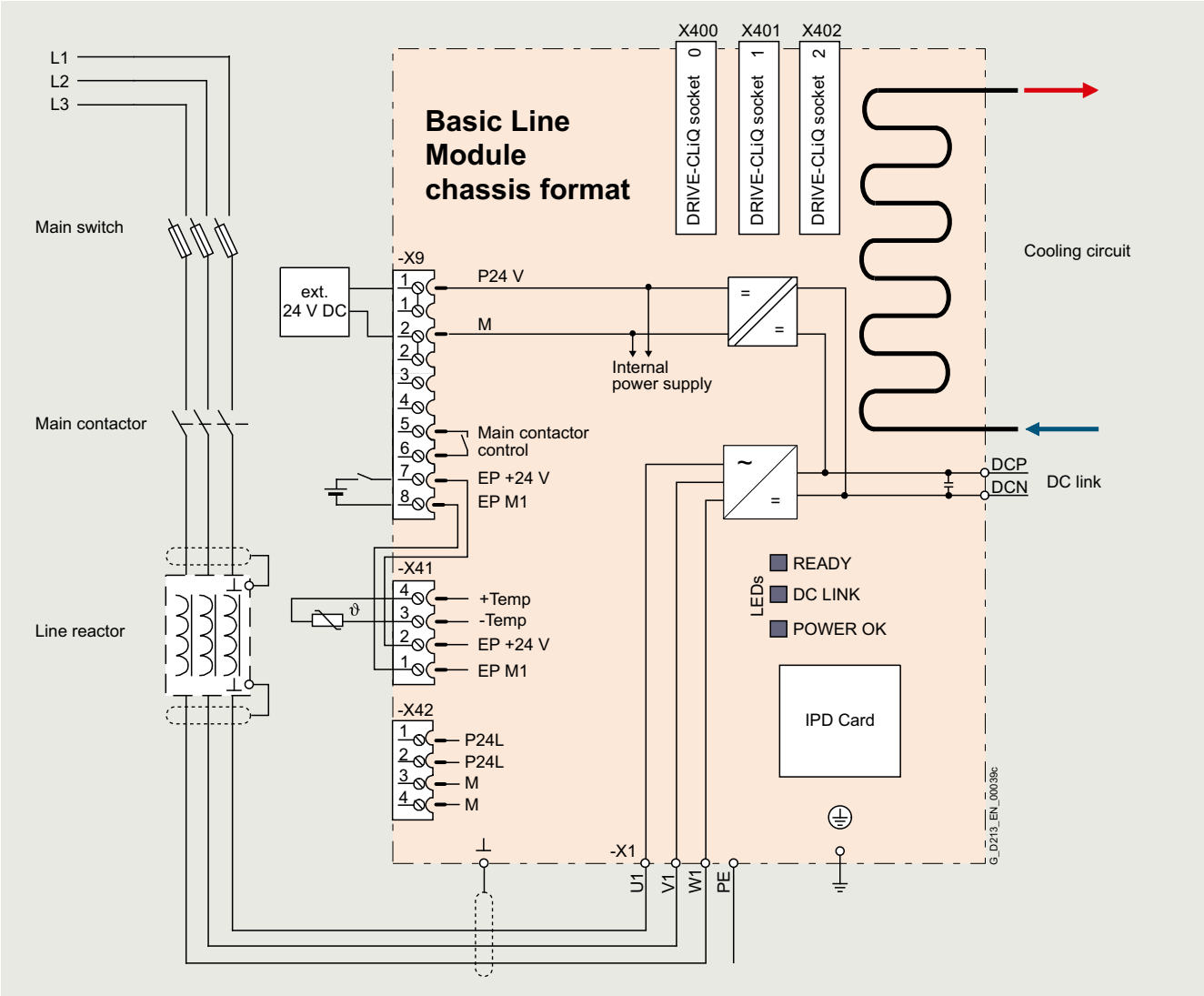

Connection example of a Basic Line Module

Technical specifications

General technical specifications

Electrical specifications	
Line power factor at rated power	
• Basic fundamental (cos φ_1)	>0.96
• Total (λ)	0.75 ... 0.93
Efficiency	>99 %
DC link voltage, approx. [1]	1.35 × line voltage
Main contactor control	
• Terminal strip -X9/5-6	240 V AC, max. 8 A 30 V DC, max. 1 A

[1] The DC link voltage is unregulated and load-dependent.
For additional information, please refer to the SINAMICS Low Voltage Engineering Manual.

© Siemens 2024

Technical specifications

Line voltage 380 ... 480 V 3 AC		Basic Line Modules		
		6SL3335-1TE37-4AA3	6SL3335-1TE41-2AA3	6SL3335-1TE41-7AA3
Rated power				
• At $I_{N\,DC}$ (50 Hz 400 V)	kW	**360**	**600**	**830**
• At $I_{H\,DC}$ (50 Hz 400 V)	kW	280	450	650
• At $I_{N\,DC}$ (60 Hz 460 V)	hp	555	925	1280
• At $I_{H\,DC}$ (60 Hz 460 V)	hp	430	690	1000
DC link current				
• Rated current $I_{N\,DC}$	A	740	1220	1730
• Base-load current $I_{H\,DC}$ [1]	A	578	936	1350
• Maximum current $I_{max\,DC}$	A	1110	1830	2595
Input current				
• Rated current $I_{N\,I}$	A	610	1000	1420
• Maximum current $I_{max\,I}$	A	915	1500	2130
Current demand				
• 24 V DC auxiliary power supply	A	0.7	0.7	0.7
DC link capacitance				
• Basic Line Module	µF	12000	20300	26100
• Drive line-up, max.	µF	96000	162400	208800
Power loss, at 50 Hz 400 V [2]				
• Dissipated to coolant	kW	2.7	4.36	5.82
• Dissipated to ambient air	kW	0.25	0.41	0.57
• Total	kW	2.95	4.77	6.39
Coolant volume flow [3]	l/min (US gal./min)	9 (2.38)	9 (2.38)	12 (3.17)
Liquid volume of the integrated heat exchanger	dm^3	0.45	0.45	0.79
Pressure drop, typ. [4] for volume flow	Pa	70000	70000	70000
Heat exchanger material		Aluminum	Aluminum	Aluminum
Coolant connections Intake/return		Pipe thread ISO 228 G 3/4 B (external thread 3/4", flat-sealing)		
Sound pressure level L_{pA} (1 m) at 50/60 Hz	dB	54	56	56
Line supply connection U1, V1, W1		2 × M12 nut	2 × M12 nut	2 × M12 nut
• Conductor cross-section, max. (IEC)	mm^2	4 × 240	4 × 240	4 × 240
DC link connection DCP, DCN		2 × M12 nut Busbar	2 × M12 nut Busbar	2 × M12 nut Busbar
PE/GND connection		2 × M12 nut	2 × M12 nut	2 × M12 nut
• Conductor cross-section, max. (IEC)	mm^2	4 × 240	4 × 240	4 × 240
Cable length, max. [5]				
• Shielded	m (ft)	2600 (8530)	4000 (13123)	4800 (15748)
• Unshielded	m (ft)	3900 (12795)	6000 (19685)	7200 (23622)
Dimensions				
• Width	mm (in)	160 (6.30)	160 (6.30)	160 (6.30)
• Height	mm (in)	1137 (44.8)	1137 (44.8)	1562 (61.5)
• Depth	mm (in)	545 (21.5)	545 (21.5)	545 (21.5)
Weight, approx.	kg (lb)	108 (238)	108 (238)	185 (408)
Frame size		FBL	FBL	GBL
Minimum short-circuit current [6]	kA	8.8	12.4	20

1) The base-load current $I_{H\,DC}$ is the basis for a duty cycle of 150 % for 60 s or $I_{max\,DC}$ for 5 s with a duty cycle duration of 300 s.

2) The specified power loss represents the maximum value at 100 % utilization. The value is lower under normal operating conditions. To ensure safe dissipation of the minor power loss released to the ambient air, it is important to follow the instructions pertaining to control cabinet installation in the SINAMICS Low Voltage Engineering Manual.

3) The value applies to coolants comprising water and a mixture of water and antifreeze agent.

4) The value is valid for water as coolant.
Additional information and notes on other coolants are provided in the SINAMICS Low Voltage Engineering Manual.

5) Total of all motor cables and DC link. Longer cable lengths for specific configurations are available on request.
For additional information, please refer to the SINAMICS Low Voltage Engineering Manual.

6) Current required for reliably triggering protective devices.

© Siemens 2024

Technical specifications

Line voltage 500 ... 690 V 3 AC		Basic Line Modules			
		6SL3335-1TG34-2AA3	6SL3335-1TG37-3AA3	6SL3335-1TG41-3AA3	6SL3335-1TG41-7AA3
Rated power					
• At $I_{N\,DC}$ (50 Hz 690 V)	kW10	**355**	**630**	**1100**	**1370**
• At $I_{H\,DC}$ (50 Hz 690 V)	kW	275	475	840	1070
• At $I_{N\,DC}$ (50 Hz 500 V)	kW	245	420	750	950
• At $I_{H\,DC}$ (50 Hz 500 V)	kW	200	345	610	775
• At $I_{N\,DC}$ (60 Hz 575 V)	hp	395	705	1230	1530
• At $I_{H\,DC}$ (60 Hz 575 V)	hp	305	530	940	1195
DC link current					
• Rated current $I_{N\,DC}$	A	420	730	1300	1650
• Base-load current $I_{H\,DC}$ [1]	A	328	570	1014	1287
• Maximum current $I_{max\,DC}$	A	630	1095	1950	2475
Input current					
• Rated current $I_{N\,I}$	A	340	600	1070	1350
• Maximum current $I_{max\,I}$	A	510	900	1605	2025
Current demand					
• 24 V DC auxiliary power supply	A	0.7	0.7	0.7	0.7
DC link capacitance					
• Basic Line Module	µF	4800	7700	15500	19300
• Drive line-up, max.	µF	38400	61600	124000	154400
Power loss, at 50 Hz 690 V [2]					
• Dissipated to coolant	kW	1.55	2.71	4.66	5.7
• Dissipated to ambient air	kW	0.21	0.38	0.43	0.55
• Total	kW	1.76	3.09	5.09	6.25
Coolant volume flow [3]	l/min (US gal./min)	9 (2.38)	9 (2.38)	12 (3.17)	12 (3.17)
Liquid volume of the integrated heat exchanger	dm^3	0.45	0.45	0.79	0.79
Pressure drop, typ. [4] for volume flow	Pa	70000	70000	70000	70000
Heat exchanger material		Aluminum	Aluminum	Aluminum	Aluminum
Coolant connections Intake/return		Pipe thread ISO 228 G 3/4 B (external thread 3/4", flat-sealing)			
Sound pressure level L_{pA} (1 m) at 50/60 Hz	dB	54	54	56	56
Line supply connection U1, V1, W1		2 × M12 nut	2 × M12 nut	2 × M12 nut	2 × M12 nut
• Conductor cross-section, max. (IEC)	mm^2	4 × 240	4 × 240	4 × 240	4 × 240
DC link connection DCP, DCN		2 × M12 nut Busbar	2 × M12 nut Busbar	2 × M12 nut Busbar	2 × M12 nut Busbar
PE/GND connection		2 × M12 nut	2 × M12 nut	2 × M12 nut	2 × M12 nut
• Conductor cross-section, max. (IEC)	mm^2	4 × 240	4 × 240	4 × 240	4 × 240
Cable length, max. [5]					
• Shielded	m (ft)	1500 (4921)	1500 (4921)	2250 (7382)	2250 (7382)
• Unshielded	m (ft)	2250 (7382)	2250 (7382)	3375 (11073)	3375 (11073)
Dimensions					
• Width	mm (in)	160 (6.30)	160 (6.30)	160 (6.30)	160 (6.30)
• Height	mm (in)	1137 (44.8)	1137 (44.8)	1562 (61.5)	1562 (61.5)
• Depth	mm (in)	545 (21.5)	545 (21.5)	545 (21.5)	545 (21.5)
Weight, approx.	kg (lb)	108 (238)	108 (238)	185 (408)	185 (408)
Frame size		FBL	FBL	GBL	GBL
Minimum short-circuit current [6]	kA	4.4	7.2	16.8	18.9

1) The base-load current $I_{H\,DC}$ is the basis for a duty cycle of 150 % for 60 s or $I_{max\,DC}$ for 5 s with a duty cycle duration of 300 s.

2) The specified power loss represents the maximum value at 100 % utilization. The value is lower under normal operating conditions. To ensure safe dissipation of the minor power loss released to the ambient air, it is important to follow the instructions pertaining to control cabinet installation in the SINAMICS Low Voltage Engineering Manual.

3) The value applies to coolants comprising water and a mixture of water and antifreeze agent.

4) The value is valid for water as coolant.
Additional information and notes on other coolants are provided in the SINAMICS Low Voltage Engineering Manual.

5) Total of all motor cables and DC link. Longer cable lengths for specific configurations are available on request.
For additional information, please refer to the SINAMICS Low Voltage Engineering Manual.

6) Current required for reliably triggering protective devices.

© Siemens 2024

Overview

The self-commutated infeed/regenerative feedback units (with IGBTs in infeed and regenerative feedback directions) generate a regulated DC link voltage. This means that the connected Motor Modules are decoupled from the line voltage. Line voltage fluctuations within the permissible supply tolerances have no effect on the motor voltage.

If required, the Active Line Modules can also provide reactive power compensation.

Active Line Modules are designed for connection to grounded TN/TT and non-grounded IT supply systems.

Liquid-cooled Active Line Modules are especially suitable for applications where installation space is restricted and environmental conditions are harsh. Liquid cooling ensures efficient heat dissipation.

Active Line Modules are always operated together with the associated Active Interface Modules. These include the necessary pre-charging circuit as well as a Clean Power Filter.

Design

The liquid-cooled Active Line Modules have the following interfaces as standard:

- 1 line supply connection
- 1 connection for the 24 V DC electronics power supply
- 1 DC link connection (DCP, DCN) for supplying the connected Motor Modules
- 3 DRIVE-CLiQ sockets
- 1 temperature sensor input for KTY84-130, Pt1000, PTC or Pt100 (Pt1000 can be used from firmware V4.7 HF17 and higher)
- 1 PE/protective conductor connection
- 2 coolant connections

The status of the Active Line Modules is indicated via three LEDs.

The following are included in the scope of supply of the Active Line Modules:

- 1 DRIVE-CLiQ cable for connection to the Control Unit
- 2 seals for coolant connections
- 1 set of warning labels in 30 languages (BG, CN, CZ, DE, DK, EE, ES, FI, FR, GB, GR, HU, IE, IS, IT, JP, KR, LT, LV, MT, NL, NO, PL, PT, RO, RU, SE, SI, SK, TR)

Selection and ordering data

Rated power at 400 V or 690 V	Rated infeed/ regenerative feedback current	**Active Line Module**
kW	A	Article No.
Line voltage 380 ... 480 V 3 AC		
300	490	**6SL3335-7TE35-0AA3**
380	605	**6SL3335-7TE36-1AA3**
500	840	**6SL3335-7TE38-4AA3**
630	985	**6SL3335-7TE41-0AA3**
900	1405	**6SL3335-7TE41-4AA3**
Line voltage 500 ... 690 V 3 AC		
630	575	**6SL3335-7TG35-8AA3**
800	735	**6SL3335-7TG37-4AA3**
900	810	**6SL3335-7TG38-1AA3**
1100	1020	**6SL3335-7TG41-0AA3**
1400	1270	**6SL3335-7TG41-3AA3**
1700	1560	**6SL3335-7TG41-6AA3**

Extension of warranty

Siemens offers for SINAMICS S120 chassis units an extension of warranty/Service Protect up to 6½ years.

Details can be found in chapter Services and Documentation

Accessories

Description	Article No.
3-way valve [1]	**VXF41...** **VXG41...**
Actuator for 3-way valve [1] • 230 V 1 AC • 24 V AC/DC	 **SAX31...** **SAX61...** **SAX81...**
Accessories for re-ordering	
Dust protection blanking plugs (50 units) For DRIVE-CLiQ port	**6SL3066-4CA00-0AA0**

For additional information, refer to the manual.

For line-side components and recommended system components, see System components.

[1] Recommended components for installing a flow control as condensation protection; manufactured by Siemens Building Technologies.

© Siemens 2024

Integration

Active Line Modules are always operated together with the associated Active Interface Modules. Active Interface Modules contain a Clean Power Filter with basic RI suppression, the pre-charging circuit for the Active Line Module, line supply voltage sensing circuit and monitoring sensors.

The liquid-cooled Active Line Modules communicate with the higher-level control module via DRIVE-CLiQ. The control module in this case can be a CU320-2 or a SIMOTION D Control Unit. An external 24 V DC power supply is required to operate the liquid-cooled Active Line Modules.

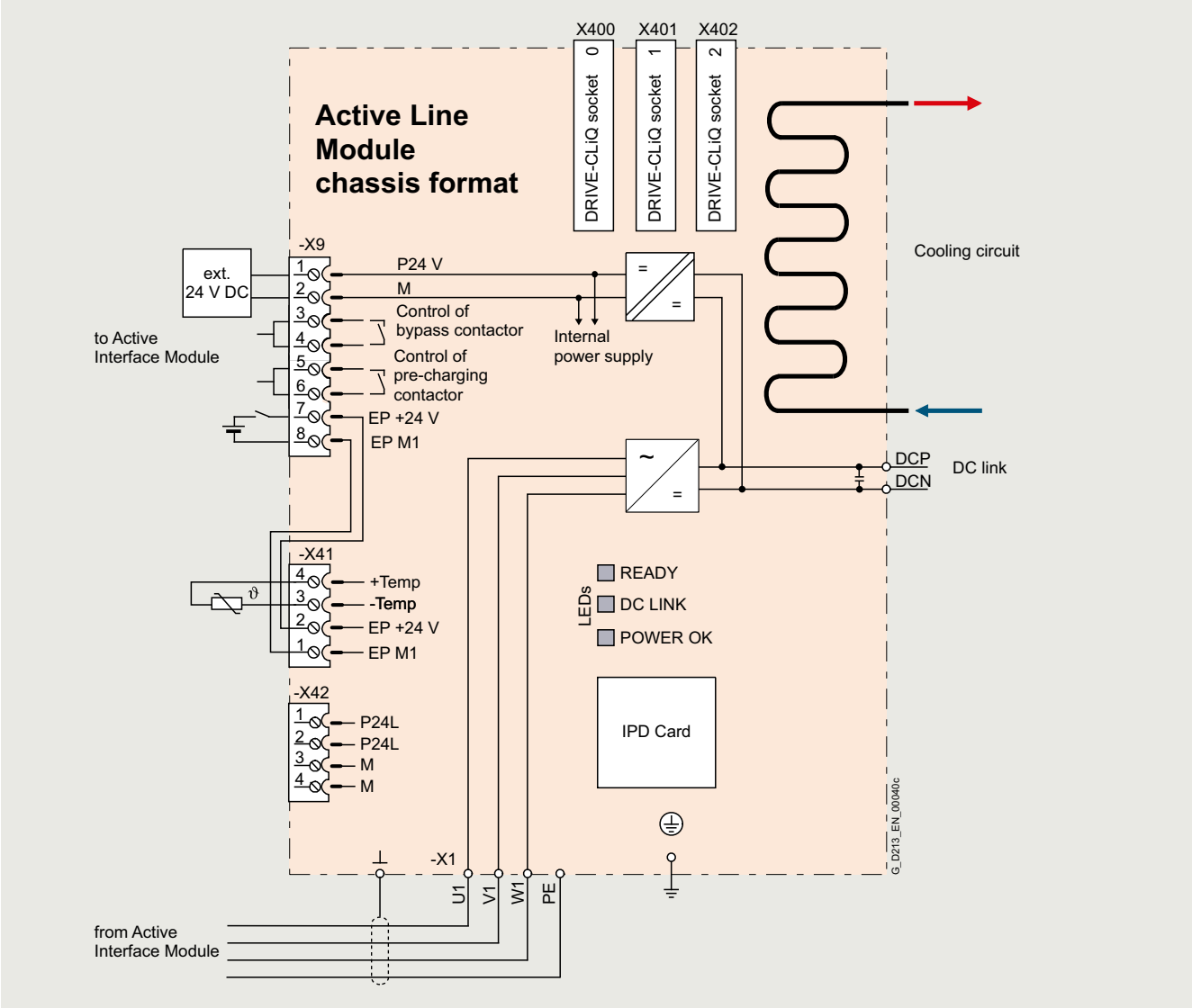

Connection example of an Active Line Module

Technical specifications

General technical specifications

Electrical specifications	
Line power factor • Basic fundamental (cos φ_1) • Total (λ)	 1 (factory setting), can be altered by inputting a reactive current setpoint 1 (factory setting)
Efficiency	>98.5 % (Active Line Modules) >99 % (Active Interface Module)
DC link voltage, approx.	The DC link voltage is regulated and can be adjusted as a voltage decoupled from the line voltage. Factory setting of the DC link voltage: 1.5 × line voltage

© Siemens 2024

Technical specifications

Line voltage 380 V ... 480 V 3 AC		Active Line Modules				
		6SL3335-7TE35-0AA3	6SL3335-7TE36-1AA3	6SL3335-7TE38-4AA3	6SL3335-7TE41-0AA3	6SL3335-7TE41-4AA3
Rated power						
• At $I_{N\,DC}$ (50 Hz 400 V)	kW	**300**	**380**	**500**	**630**	**900**
• At $I_{H\,DC}$ (50 Hz 400 V)	kW	270	335	465	545	780
• At $I_{N\,DC}$ (60 Hz 460 V)	hp	500	600	700	900	1250
• At $I_{H\,DC}$ (60 Hz 460 V)	hp	400	500	700	800	1000
DC link current						
• Rated current $I_{N\,DC}$	A	549	677	941	1100	1573
• Base-load current $I_{H\,DC}$ [1]	A	489	603	837	982	1401
• Maximum current $I_{max\,DC}$	A	823	1017	1410	1654	2361
Infeed/regenerative feedback current						
• Rated current $I_{N\,I}$	A	490	605	840	985	1405
• Maximum current $I_{max\,I}$	A	735	907	1260	1477	2055
Current demand						
• 24 V DC auxiliary power supply	A	1.5	1.6	1.6	1.6	1.6
DC link capacitance						
• Active Line Module	µF	9600	12600	17400	18900	28800
• Drive line-up, max.	µF	76800	134400	134400	230400	230400
Pulse frequency	kHz	4	2.5	2.5	2.5	2.5
Power loss, at 50 Hz 400 V [2]						
• Dissipated to coolant	kW	3.42	4.65	5.52	7.46	9.58
• Dissipated to ambient air	kW	0.14	0.17	0.23	0.44	0.62
• Total	kW	3.56	4.82	5.75	7.9	10.2
Coolant volume flow [3]	l/min (US gal./min)	12 (3.17)	16 (4.23)	16 (4.23)	27 (7.13)	27 (7.13)
Liquid volume of the integrated heat exchanger	dm^3	0.91	0.74	0.74	1.56	1.56
Pressure drop, typ. [4] for volume flow	Pa	70000	70000	70000	70000	70000
Heat exchanger material		Stainless steel	Aluminum	Aluminum	Aluminum	Aluminum
Coolant connections Intake/return		Pipe thread ISO 228 G 3/4 B (external thread 3/4", flat-sealing)				
Sound pressure level L_{pA} [5] (1 m) at 50/60 Hz	dB	69/73	70/73	70/73	71/73	71/73
Line supply connection U1, V1, W1		Hole for M12	2 x hole for M12	2 x hole for M12	2 x hole for M12	2 x hole for M12
• Conductor cross-section, max. (IEC)	mm^2	2 × 240	4 × 185	4 × 185	Busbar	Busbar
DC link connection DCP, DCN		2 × hole for M12 Busbar	2 × hole for M12 Busbar	2 × hole for M12 Busbar	2 × hole for M12 Busbar	2 × hole for M12 Busbar
PE/GND connection		2 × hole for M12	2 × hole for M12	2 × hole for M12	2 × hole for M12	2 × hole for M12
• Conductor cross-section, max. (IEC)	mm^2	2 × 240	4 × 185	4 × 185	4 × 240	4 × 240
Cable length, max. [6]						
• Shielded	m (ft)	2700 (8858)	3900 (12795)	3900 (12795)	3900 (12795)	3900 (12795)
• Unshielded	m (ft)	4050 (13287)	5850 (19193)	5850 (19193)	5850 (19193)	5850 (19193)
Dimensions						
• Width	mm (in)	150 (5.91)	265 (10.4)	265 (10.4)	295 (11.6)	295 (11.6)
• Height	mm (in)	1172 (46.1)	1002 (39.4)	1002 (39.4)	1516 (59.7)	1516 (59.7)
• Depth	mm (in)	545 (21.5)	545 (21.5)	545 (21.5)	545 (21.5)	545 (21.5)
Weight, approx.	kg (lb)	80 (176)	110 (243)	110 (243)	220 (485)	220 (485)
Frame size		GXL	HXL	HXL	JXL	JXL
Minimum short-circuit current [7]	kA	8	9.2	12.6	16	21

1) The base-load current $I_{H\,DC}$ is the basis for a duty cycle of 150 % for 60 s or $I_{max\,DC}$ for 5 s with a duty cycle duration of 300 s.

2) The specified power loss represents the maximum value at 100 % utilization. The value is lower under normal operating conditions. To ensure safe dissipation of the minor power loss released to the ambient air, it is important to follow the instructions pertaining to control cabinet installation in the SINAMICS Low Voltage Engineering Manual.

3) The value applies to coolants comprising water and a mixture of water and antifreeze agent.

4) The value is valid for water as coolant.
Additional information and notes on other coolants are provided in the SINAMICS Low Voltage Engineering Manual.

5) Total sound pressure level of Active Interface Module and Active Line Module.

6) Total of all motor cables and DC link. Longer cable lengths for specific configurations are available on request. For additional information, please refer to the SINAMICS Low Voltage Engineering Manual.

7) Current required for reliably triggering protective devices.

© Siemens 2024

Technical specifications

Line voltage 500 ... 690 V 3 AC		Active Line Modules					
		6SL3335-7TG35-8AA3	6SL3335-7TG37-4AA3	6SL3335-7TG38-1AA3	6SL3335-7TG41-0AA3	6SL3335-7TG41-3AA3	6SL3335-7TG41-6AA3
Rated power							
• At $I_{N\,DC}$ (50 Hz 690 V)	kW	**630**	**800**	**900**	**1100**	**1400**	**1700**
• At $I_{H\,DC}$ (50 Hz 690 V)	kW	620	705	670	1000	1215	1490
• At $I_{N\,DC}$ (50 Hz 500 V)	kW	447	560	620	780	965	1180
• At $I_{H\,DC}$ (50 Hz 500 V)	kW	450	510	485	710	880	1080
• At $I_{N\,DC}$ (60 Hz 575 V)	hp	675	900	975	1250	1500	1880
• At $I_{H\,DC}$ (60 Hz 575 V)	hp	506	600	765	1000	1250	1530
DC link current							
• Rated current $I_{N\,DC}$	A	644	823	907	1147	1422	1740
• Base-load current $I_{H\,DC}$ [1]	A	573	732	808	936	1266	1550
• Maximum current $I_{max\,DC}$	A	966	1235	1360	1722	2133	2620
Infeed/regenerative feedback current							
• Rated current $I_{N\,I}$	A	575	735	810	1025	1270	1560
• Maximum current $I_{max\,I}$	A	862	1100	1214	1537	1905	2055
Current demand							
• 24 V DC auxiliary power supply	A	1.6	1.6	1.6	1.6	1.46	1.5
DC link capacitance							
• Active Line Module	µF	9670	10500	10500	16000	19330	21000
• Drive line-up, max.	µF	59200	153600	153600	153600	153600	210000
Pulse frequency	kHz	2.5	2.5	2.5	2.5	2.5	2.5
Power loss, at 50 Hz 690 V [2]							
• Dissipated to coolant	kW	5.45	7.45	8.28	10.37	12.98	17.17
• Dissipated to ambient air	kW	0.16	0.2	0.22	0.53	0.57	0.79
• Total	kW	5.61	7.65	8.5	10.9	13.55	17.96
Coolant volume flow [3]	l/min (US gal./min)	16 (4.23)	16 (4.23)	16 (4.23)	27 (7.13)	27 (7.13)	27 (7.13)
Liquid volume of the integrated heat exchanger	dm^3	0.74	0.74	0.74	1.56	1.56	1.56
Pressure drop, typ. [4] for volume flow	Pa	70000	70000	70000	70000	70000	70000
Heat exchanger material		Aluminum	Aluminum	Aluminum	Aluminum	Aluminum	Aluminum
Coolant connections Intake/return		Pipe thread ISO 228 G 3/4 B (external thread 3/4", flat-sealing)					
Sound pressure level L_{pA} [5] (1 m) at 50/60 Hz	dB	70/73	71/73	71/73	71/73	71/73	71/73
Line supply connection U1, V1, W1		2 × hole for M12	2 × hole for M12	2 × hole for M12	2 × hole for M12	2 × hole for M12	2 × hole for M12
• Conductor cross-section, max. (IEC)	mm^2	4 × 185	4 × 185	4 × 185	Busbar	Busbar	Busbar
DC link connection DCP, DCN		2 × hole for M12 Busbar	2 × hole for M12 Busbar	2 × hole for M12 Busbar	2 × hole for M12 Busbar	2 × hole for M12 Busbar	2 × hole for M12 Busbar
PE/GND connection		2 × hole for M12	2 × hole for M12	2 × hole for M12	2 × hole for M12	2 × hole for M12	2 × hole for M12
• Conductor cross-section, max. (IEC)	mm^2	4 × 185	4 × 185	4 × 185	Busbar	Busbar	Busbar
Cable length, max. [6]							
• Shielded	m (ft)	2250 (7382)	2250 (7382)	2250 (7382)	2250 (7382)	2250 (7382)	2250 (7382)
• Unshielded	m (ft)	3375 (11073)	3375 (11073)	3375 (11073)	3375 (11073)	3375 (11073)	3375 (11073)
Dimensions							
• Width	mm (in)	265 (10.4)	265 (10.4)	265 (10.4)	265 (10.4)	265 (10.4)	265 (10.4)
• Height	mm (in)	1002 (39.4)	1002 (39.4)	1002 (39.4)	1516 (59.7)	1516 (59.7)	1516 (59.7)
• Depth	mm (in)	545 (21.5)	545 (21.5)	545 (21.5)	545 (21.5)	545 (21.5)	545 (21.5)
Weight, approx.	kg (lb)	110 (243)	110 (243)	110 (243)	220 (485)	220 (485)	230 (507)
Frame size		HXL	HXL	HXL	JXL	JXL	JXL
Minimum short-circuit current [7]	kA	8.4	10.5	12.6	16	20	24

1) The base-load current $I_{H\,DC}$ is the basis for a duty cycle of 150 % for 60 s or $I_{max\,DC}$ for 5 s with a duty cycle duration of 300 s.

2) The specified power loss represents the maximum value at 100 % utilization. The value is lower under normal operating conditions. To ensure safe dissipation of the minor power loss released to the ambient air, it is important to follow the instructions pertaining to control cabinet installation in the SINAMICS Low Voltage Engineering Manual.

3) The value applies to coolants comprising water and a mixture of water and antifreeze agent.

4) The value is valid for water as coolant. Additional information and notes on other coolants are provided in the SINAMICS Low Voltage Engineering Manual.

5) Total sound pressure level of Active Interface Module and Active Line Module.

6) Total of all motor cables and DC link. Longer cable lengths for specific configurations are available on request. For additional information, please refer to the SINAMICS Low Voltage Engineering Manual.

7) Current required for reliably triggering protective devices.

© Siemens 2024

Overview

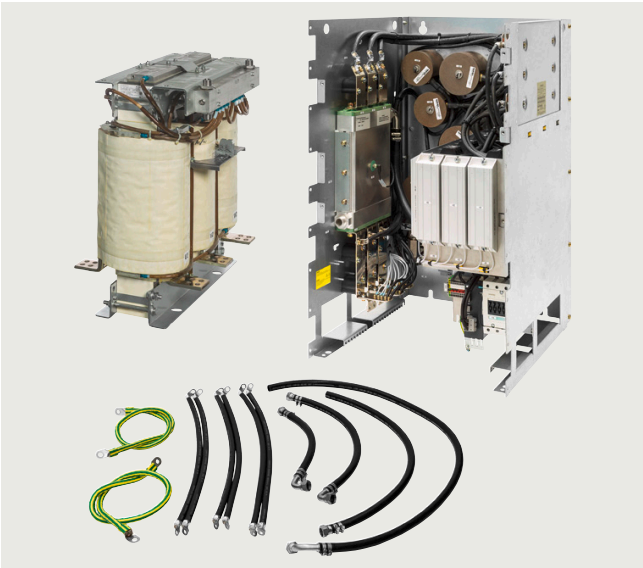

The Active Interface Module essentially comprises a liquid-cooled filter reactor and a liquid-cooled filter module. The filter module contains a Clean Power Filter with basic RI suppression, the pre-charging circuit for the Active Line Module, the line voltage sensing circuit and monitoring sensors.

A bypass contactor is provided separately. Active Interface Modules are used in conjunction with Active Line Modules.

Liquid-cooled Active Interface Modules cannot be supplied for all liquid-cooled Active Line Modules. Where they are not available, air-cooled Active Interface Modules can be ordered instead.

Design

Active Interface Modules have the following interfaces as standard:

- 1 line supply connection
- 1 load connection
- 1 connection for the 24 V DC electronics power supply
- 1 connection for the external 230 V AC supply
- 1 DRIVE-CLiQ socket (on VSM10 Voltage Sensing Module)
- 1 connection for pre-charging circuit
- 1 PE/protective conductor connection
- 2 coolant connections

The scope of supply of the Active Interface Modules includes:

- Liquid-cooled filter reactor
- Liquid-cooled filter module
- Connection kit (cables and hoses)
- DRIVE-CLiQ cable for the connection between Active Interface Module and Active Line Module
- 2 seals for coolant connections
- 1 set of warning labels in 30 languages (BG, CN, CZ, DE, DK, EE, ES, FI, FR, GB, GR, HU, IE, IS, IT, JP, KR, LT, LV, MT, NL, NO, PL, PT, RO, RU, SE, SI, SK, TR)

Extension of warranty

Siemens offers for SINAMICS S120 chassis units an extension of warranty/Service Protect up to 6½ years.

Details can be found in chapter Services and Documentation

Selection and ordering data

Suitable for Active Line Module chassis format, liquid-cooled	Rated power of the Active Line Modules at 400 V or 690 V kW	**Active Interface Module, liquid-cooled** Article No.	**Active Interface Module, air-cooled** Article No.
Line voltage 380 ... 480 V 3 AC			
6SL3335-7TE35-0AA3	300	– [1]	**6SL3300-7TE35-0AA1**
6SL3335-7TE36-1AA3	380	**6SL3305-7TE38-4AA5**	–
6SL3335-7TE38-4AA3	500	**6SL3305-7TE38-4AA5**	–
6SL3335-7TE41-0AA3	630	**6SL3305-7TE41-4AA5**	–
6SL3335-7TE41-4AA3	900	**6SL3305-7TE41-4AA5**	–
Line voltage 500 ... 690 V 3 AC			
6SL3335-7TG35-8AA3	630	– [1]	**6SL3300-7TG35-8AA1**
6SL3335-7TG37-4AA3	800	**6SL3305-7TG37-4AA5**	–
6SL3335-7TG38-1AA3	900	**6SL3305-7TG41-0AA5**	–
6SL3335-7TG41-0AA3	1100	**6SL3305-7TG41-0AA5**	–
6SL3335-7TG41-3AA3	1400	**6SL3305-7TG41-3AA5**	–
6SL3335-7TG41-6AA3	1700	**6SL3305-7TG41-6AA5**	–

[1] For these power ratings, no liquid-cooled Active Interface Modules are available. Air-cooled devices can be alternatively used. See the right-hand column and additional information in section Air-cooled Active Interface Modules.

© Siemens 2024

Integration

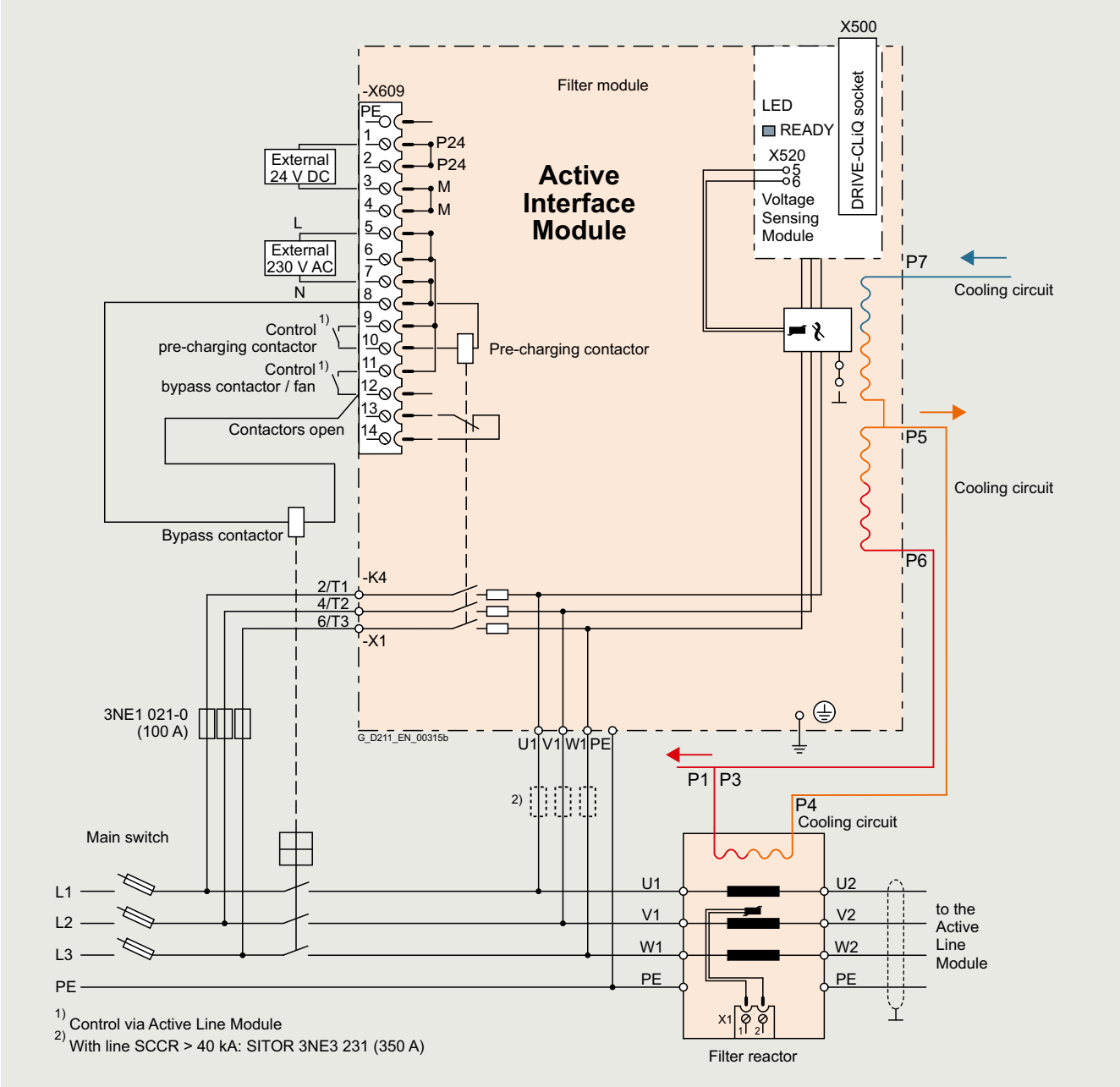

Connection example of liquid-cooled Active Interface Module with external bypass contactor, valid for article numbers 6SL3305-7TE41-4AA5 and 6SL3305-7TG41-6AA5

© Siemens 2024

Integration

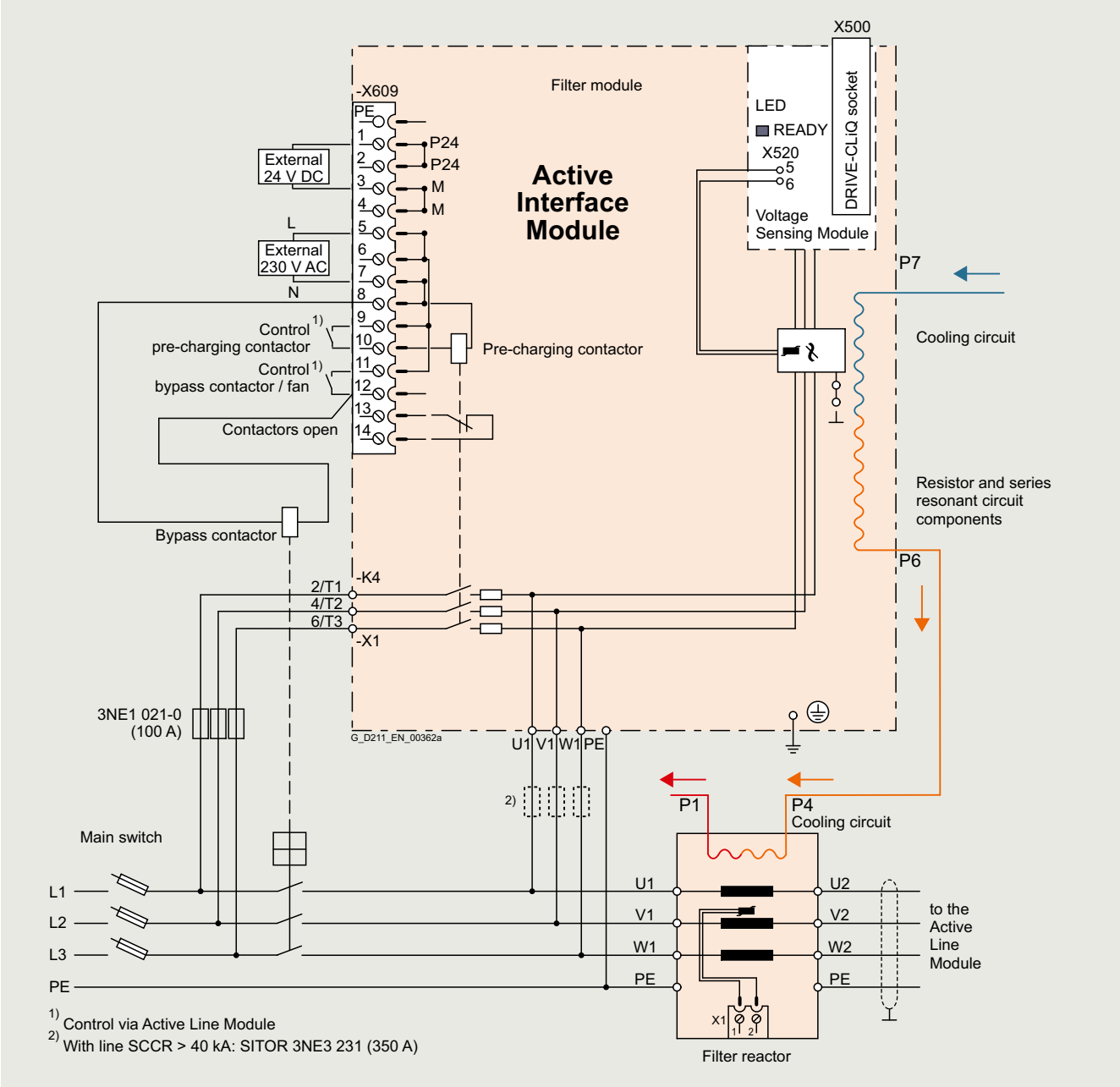

Connection example of liquid-cooled Active Interface Module with external bypass contactor, valid for article numbers 6SL3305-7TE38-4AA5, 6SL3305-7TG37-4AA5, 6SL3305-7TG41-0AA5, and 6SL3305-7TG41-3AA5

© Siemens 2024

Technical specifications

Line voltage 380 ... 480 V 3 AC		Active Interface Module			
		6SL3305-7TE38-4AA5		6SL3305-7TE41-4AA5	
Suitable for Active Line Module • Rated power at 400 V - Liquid-cooled	kW	**380** 6SL3335-7TE36-1AA3	**500** 6SL3335-7TE38-4AA3	**630** 6SL3335-7TE41-0AA3	**900** 6SL3335-7TE41-4AA3
Rated current	A	605	840	985	1405
Bypass contactor [1]		3RT1476-6AP36	3WA1110-4AE03-4EQ0	3WA1112-4AE03-4EQ0	3WA1116-4AE03-4EQ0
Current demand • 24 V DC auxiliary power supply • 230 V 2 AC - Inrush current - Holding current	 A A A	 0.17 1.0 0.1	 0.17 1.0 0.1	 0.17 1.0 0.1	 0.17 1.0 0.1
DC link capacitance • Drive line-up, max. [2]	µF	134400	134400	230400	230400
Coolant volume flow	l/min (US gal./min)	10 (2.64)	10 (2.64)	16 (4.23)	16 (4.23)
Pressure drop, typ. for volume flow	Pa	70000	70000	70000	70000
Sound pressure level L_{pA} (1 m) at 50/60 Hz	dB	71/71	71/71	71/71	71/71
Frame size		JIL	JIL	JIL	JIL
Filter reactor					
Power loss [3] • At 50 Hz 400 V • At 60 Hz 460 V • Dissipated to ambient air	 kW kW kW	 3.5 3.5 1.2	 3.5 3.5 1.2	 8.6 8.6 0.9	 8.6 8.6 0.9
Liquid volume • Of integrated reactor cooler • Of hoses supplied	 dm^3 dm^3/m	 0.6 0.285	 0.6 0.285	 0.6 0.285	 0.6 0.285
Coolant volume flow	l/min (US gal./min)	10 (2.64)	10 (2.64)	8 (2.11)	8 (2.11)
Heat exchanger material		Aluminum	Aluminum	Aluminum	Aluminum
Coolant connections Return and connection to filter module		Pipe thread ISO 228 G 3/4 B (external thread 3/4", flat-sealing)			
Line/load connection L1, L2, L3 / U2, V2, W2		Flat connector for M12 screws	Flat connector for M12 screws	Flat connector for M12 screws	Flat connector for M12 screws
PE/GND connection • Conductor cross-section, max. (IEC)	 mm^2	M10 stud 1 × 240	M10 stud 1 × 240	M10 stud 1 × 240	M10 stud 1 × 240
Degree of protection		IP00	IP00	IP00	IP00
Dimensions • Width • Height • Depth	 mm (in) mm (in) mm (in)	 349 (13.7) 700 (27.6) 575 (22.6)	 349 (13.7) 700 (27.6) 575 (22.6)	 382 (15.0) 698 (27.5) 575 (22.6)	 382 (15.0) 698 (27.5) 575 (22.6)
Weight, approx.	kg (lb)	230 (507)	230 (507)	299 (659)	299 (659)
Filter module					
Power loss [3] • At 50 Hz 400 V • At 60 Hz 460 V • Dissipated to ambient air	 kW kW kW	 2.7 2.7 0.15	 2.7 2.7 0.15	 3.6 3.6 0.15	 3.6 3.6 0.15
Liquid volume	dm^3	1	1	1	1
Heat exchanger material		Aluminum	Aluminum	Aluminum	Aluminum
Coolant connections Intake and connection to filter reactor		Pipe thread ISO 228 G 3/4 B (external thread 3/4", flat-sealing)			
PE/GND connection • Conductor cross-section, max. (IEC)	 mm^2	Flat connector for M8 screw 2 × 120	Flat connector for M8 screw 2 × 120	Flat connector for M8 screw 2 × 120	Flat connector for M8 screw 2 × 120
Degree of protection		IP00	IP00	IP00	IP00
Dimensions • Width • Height • Depth	 mm (in) mm (in) mm (in)	 506 (19.9) 840 (33.1) 574 (22.6)	 506 (19.9) 840 (33.1) 574 (22.6)	 506 (19.9) 840 (33.1) 574 (22.6)	 506 (19.9) 840 (33.1) 574 (22.6)
Weight, approx.	kg (lb)	110 (243)	110 (243)	110 (243)	110 (243)

[1] The bypass contactor is not included in the scope of supply.

[2] Information on higher capacitances is included in the SINAMICS Low Voltage Engineering Manual.

[3] The specified power loss represents the maximum value at 100 % utilization. The value is lower under normal operating conditions. To ensure safe dissipation of the minor power loss released to the ambient air, it is important to follow the instructions pertaining to control cabinet installation in the SINAMICS Low Voltage Engineering Manual.

© Siemens 2024

Technical specifications

Line voltage 500 ... 690 V 3 AC		**Active Interface Modules**			
		6SL3305-7TG37-4AA5	6SL3305-7TG41-0AA5	6SL3305-7TG41-3AA5	6SL3305-7TG41-6AA5
Suitable for Active Line Module • Rated power at 690 V - Liquid-cooled	kW	**800** 6SL3335-7TG37-4AA3	**900/1100** 6SL3335-7TG38-1AA3 6SL3335-7TG41-0AA3	**1400** 6SL3335-7TG41-3AA3	**1700** 6SL3335-7TG41-6AA3
Rated current	A	735	1025	1270	1560
Bypass contactor [1]		3RT1476-6AP36 (3 units)	3WA1220-4AE03-4EQ0-Z B12	3WA1220-4AE03-4EQ0-Z B16	3WA1220-4AE03-4EQ0-Z B16
Current demand • 24 V DC auxiliary power supply • 230 V 2 AC - Inrush current - Holding current	 A A A	 0.17 1.0 0.1	 0.17 1.0 0.1	 0.17 1.0 0.1	 0.17 1.0 0.1
DC link capacitance • Drive line-up, max. [2]	µF	153600	153600	153600	210000
Coolant volume flow	l/min (US gal./min)	10 (2.64)	10 (2.64)	10 (2.64)	16 (4.23)
Pressure drop, typ. for volume flow	Pa	70000	70000	70000	70000
Sound pressure level L_{pA} (1 m) at 50/60 Hz	dB	71/71	71/71	71/71	71/71
Frame size		JIL	JIL	JIL	JIL
Filter reactor					
Power loss [3] • At 50 Hz 690 V • At 60 Hz 575 V • Dissipated to ambient air	 kW kW kW	 5.5 5.5 0.5	 6.2 6.2 0.6	 9.3 9.3 0.95	 11.0 11.0 1.15
Liquid volume • Of integrated reactor cooler • Of hoses supplied	 dm^3 dm^3/m	 0.6 0.285	 0.6 0.285	 0.6 0.285	 0.6 0.285
Coolant volume flow	l/min (US gal./min)	10 (2.64)	10 (2.64)	10 (2.64)	8 (2.11)
Heat exchanger material		Aluminum	Aluminum	Aluminum	Aluminum
Coolant connections Return and connection to filter module		Pipe thread ISO 228 G 3/4 B (external thread 3/4", flat-sealing)			
Line/load connection L1, L2, L3 / U2, V2, W2		Flat connector for M12 screws	Flat connector for M12 screws	Flat connector for M12 screws	Flat connector for M12 screws
PE/GND connection • Conductor cross-section, max. (IEC)	 mm^2	M10 stud 1 × 240	M10 stud 1 × 240	M10 stud 1 × 240	M10 stud 1 × 240
Degree of protection		IP00	IP00	IP00	IP00
Dimensions • Width • Height • Depth	 mm (in) mm (in) mm (in)	 358 (14.1) 675 (26.6) 575 (22.6)	 440 (17.3) 705 (27.8) 575 (22.6)	 440 (17.3) 705 (27.8) 575 (22.6)	 440 (17.3) 705 (27.8) 580 (22.8)
Weight, approx.	kg (lb)	234 (516)	365 (805)	365 (805)	365 (805)
Filter module					
Power loss [3] • At 50 Hz 690 V • At 60 Hz 575 V • Dissipated to ambient air	 kW kW kW	 4.0 4.0 0.15	 5.0 5.0 0.15	 5.0 5.0 0.15	 7.5 7.5 0.15
Liquid volume	dm^3	1	1	1	1
Heat exchanger material		Aluminum	Aluminum	Aluminum	Aluminum
Coolant connections Intake and connection to filter reactor		Pipe thread ISO 228 G 3/4 B (external thread 3/4", flat-sealing)			
PE/GND connection • Conductor cross-section, max. (IEC)	 mm^2	Flat connector for M8 screw 2 × 120	Flat connector for M8 screw 2 × 120	Flat connector for M8 screw 2 × 120	Flat connector for M8 screw 2 × 120
Degree of protection		IP00	IP00	IP00	IP00
Dimensions • Width • Height • Depth	 mm (in) mm (in) mm (in)	 506 (19.9) 840 (33.1) 574 (22.6)	 506 (19.9) 840 (33.1) 574 (22.6)	 506 (19.9) 840 (33.1) 574 (22.6)	 506 (19.9) 840 (33.1) 574 (22.6)
Weight, approx.	kg (lb)	110 (243)	110 (243)	110 (243)	110 (243)

[1] The bypass contactor is not included in the scope of supply.

[2] Information on higher capacitances is included in the SINAMICS Low Voltage Engineering Manual.

[3] The specified power loss represents the maximum value at 100 % utilization. The value is lower under normal operating conditions. To ensure safe dissipation of the minor power loss released to the ambient air, it is important to follow the instructions pertaining to control cabinet installation in the SINAMICS Low Voltage Engineering Manual.

© Siemens 2024

3

Overview

A Motor Module comprises a self-commutated inverter with IGBTs. It generates a variable voltage with variable frequency from the DC link voltage that feeds the connected motor.

Multiple Motor Modules can be operated on a single DC link. This permits energy to be transferred between the Motor Modules. This means that if one Motor Module operating in generator mode produces energy, the energy can be used by another Motor Module operating in motor mode.

Motor Modules are controlled by a Control Unit.

Liquid-cooled Motor Modules are especially suitable for applications where installation space is restricted and environmental conditions are harsh. Liquid cooling ensures efficient heat dissipation.

Design

The liquid-cooled Motor Modules have the following interfaces as standard:

- 1 motor connection
- 1 connection for the 24 V DC electronics power supply
- 1 DC link connection (DCP, DCN) for connecting to the supply DC link
- 3 DRIVE-CLiQ sockets
- 1 temperature sensor input for KTY84-130, Pt1000, PTC or Pt100 (Pt1000 can be used from firmware V4.7 HF17 and higher)
- 1 connection for Safe Brake Adapter
- 1 connection for Safety Integrated
- 2 PE/protective conductor connections
- 2 coolant connections

The status of the Motor Modules is indicated via three LEDs.

The scope of supply of the Motor Modules includes:

- 1 DRIVE-CLiQ cable for connection to the Control Unit
- 2 seals for coolant connections
- 1 set of warning labels in 30 languages (BG, CN, CZ, DE, DK, EE, ES, FI, FR, GB, GR, HU, IE, IS, IT, JP, KR, LT, LV, MT, NL, NO, PL, PT, RO, RU, SE, SI, SK, TR)

Selection and ordering data

Type rating at 400 V or 690 V kW	Rated output current A	**Motor Module** Article No.
Line voltage 380 ... 480 V 3 AC (DC link voltage 510 ... 720 V DC)		
110	210	**6SL3325-1TE32-1AA3**
132	260	**6SL3325-1TE32-6AA3**
160	310	**6SL3325-1TE33-1AA3**
250	490	**6SL3325-1TE35-0AA3**
315	605	**6SL3325-1TE36-1AA3**
400	745	**6SL3325-1TE37-5AA3**
450	840	**6SL3325-1TE38-4AA3**
560	985	**6SL3325-1TE41-0AA3**
710	1260	**6SL3325-1TE41-2AA3**
800	1405	**6SL3325-1TE41-4AA3**
800 [1]	1330	**6SL3325-1TE41-4AS3**
Line voltage 500 ... 690 V 3 AC (DC link voltage 675 ... 1035 V DC)		
90	100	**6SL3325-1TG31-0AA3**
132	150	**6SL3325-1TG31-5AA3**
200	215	**6SL3325-1TG32-2AA3**
315	330	**6SL3325-1TG33-3AA3**
450	465	**6SL3325-1TG34-7AA3**
560	575	**6SL3325-1TG35-8AA3**
710	735	**6SL3325-1TG37-4AA3**
800	810	**6SL3325-1TG38-0AA3**
800	810	**6SL3325-1TG38-1AA3**
1000	1025	**6SL3325-1TG41-0AA3**
1200	1270	**6SL3325-1TG41-3AA3**
1500	1560	**6SL3325-1TG41-6AP3**

Extension of warranty

Siemens offers for SINAMICS S120 chassis units an extension of warranty/Service Protect up to 6½ years.

Details can be found in chapter Services and Documentation

Accessories

Description	Article No.
3-way valve [1]	**VXF41...** **VXG41...**
Actuator for 3-way valve [2] • 230 V 1 AC • 24 V AC/DC	 **SAX31...** **SAX61...** **SAX81...**
Accessories for re-ordering	
Dust protection blanking plugs (50 units) For DRIVE-CLiQ port	**6SL3066-4CA00-0AA0**

For motor-side components, see System components.

[1] This Motor Module has been specifically designed for loads demanding a high dynamic performance.

[2] Recommended components for installing a flow control as condensation protection; manufactured by Siemens Building Technologies.

© Siemens 2024

Integration

The liquid-cooled Motor Modules communicate with the higher-level control module via DRIVE-CLiQ. The control module in this case can be a CU320-2 or a SIMOTION D Control Unit.

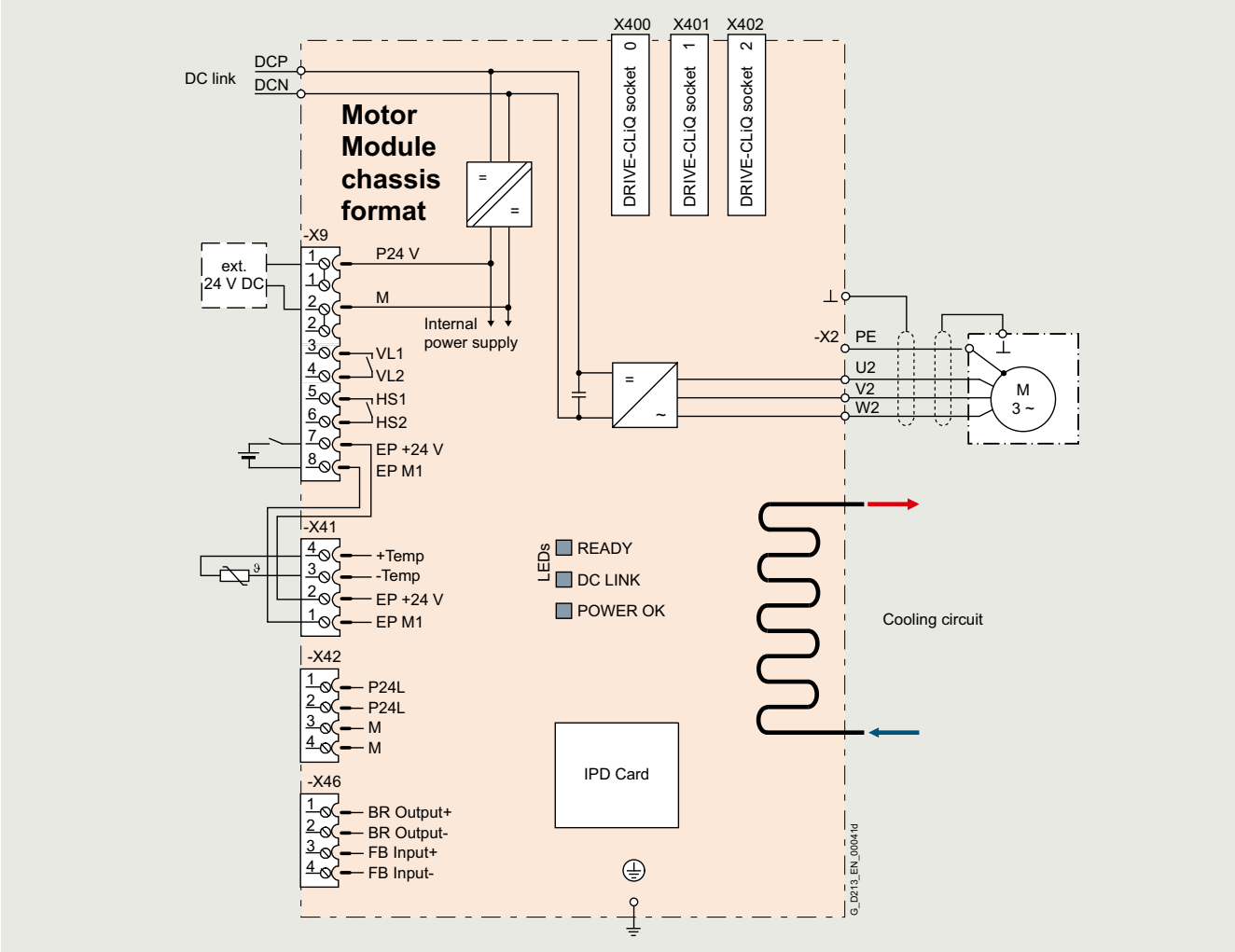

Connection example of a liquid-cooled Motor Module

Technical specifications

General technical specifications

Electrical specifications	
Efficiency	98.5 %
DC link voltage (up to 2000 m (6562 ft) above sea level)	510 ... 720 V DC (line voltage 380 ... 480 V 3 AC) or 675 ... 1035 V DC (line voltage 500 ... 690 V 3 AC)
Output frequency [1] • Control mode Servo • Control mode Vector • Control mode V/f	 0 ... 550 Hz 0 ... 550 Hz 0 ... 550 Hz
Safety Integrated	Safety Integrity Level 2 (SIL2) acc. to IEC 61508, Performance Level d (PLd) acc. to EN ISO 13849-1 and Control Category 3 acc. to EN ISO 13849-1.

[1] Please note:
- The correlation between the maximum output frequency, pulse frequency and current derating. Higher output frequencies on request. For more information, see https://support.industry.siemens.com/cs/document/104020669
- The correlation between the minimum output frequency and permissible output current (current derating).
For additional information, please refer to the SINAMICS Low Voltage Engineering Manual.

© Siemens 2024

Technical specifications

Line voltage 380 ... 480 V 3 AC DC link voltage 510 ... 720 V DC		Motor Modules				
		6SL3325-1TE32-1AA3	6SL3325-1TE32-6AA3	6SL3325-1TE33-1AA3	6SL3325-1TE35-0AA3	6SL3325-1TE36-1AA3
Type rating						
• At I_L (50 Hz 400 V) [1]	kW	**110**	**132**	**160**	**250**	**315**
• At I_H (50 Hz 400 V) [1]	kW	90	110	132	200	250
• At I_L (60 Hz 460 V) [2]	hp	150	200	250	400	500
• At I_H (60 Hz 460 V) [2]	hp	150	200	200	350	350
Output current						
• Rated current $I_{N\,O}$	A	210	260	310	490	605
• Base-load current I_L [3]	A	205	250	302	477	590
• Base-load current I_H [4]	A	178	233	277	438	460
• Maximum current $I_{max\,O}$	A	307	375	453	715	885
DC link current						
• Rated current $I_{N\,DC}$ when supplied via						
- Basic Line Module	A	256	317	380	600	738
- Active Line Module	A	230	287	340	538	664
• Base-load current $I_{L\,DC}$ [3] when supplied via						
- Basic Line Module	A	250	305	368	581	719
- Active Line Module	A	225	274	331	522	646
• Base-load current $I_{H\,DC}$ [4] when supplied via						
- Basic Line Module	A	227	284	338	534	561
- Active Line Module	A	195	255	303	480	504
Current demand						
• 24 V DC auxiliary power supply	A	1.4	1.4	1.5	1.5	1.6
DC link capacitance	µF	4800	5800	8400	9600	12600
Pulse frequency [5]						
• Rated frequency	kHz	2	2	2	2	1.25
• Pulse frequency, max.						
- Without current derating	kHz	2	2	2	2	1.25
- With current derating	kHz	8	8	8	8	8
Power loss, max. [6]						
• At 50 Hz 400 V	kW	1.61	1.95	2.29	3.56	4.81
• At 60 Hz 460 V	kW	1.68	2.06	2.38	3.74	5.25
• Dissipated to ambient air	kW	0.06	0.07	0.09	0.14	0.16
Coolant volume flow [7]	l/min (US gal./min)	9 (2.38)	9 (2.38)	12 (3.17)	12 (3.17)	16 (4.23)
Liquid volume of the integrated heat exchanger	dm^3	0.31	0.31	0.91	0.91	0.74
Pressure drop, typ. [8] for volume flow	Pa	70000	70000	70000	70000	70000
Heat exchanger material		Stainless steel	Stainless steel	Stainless steel	Stainless steel	Aluminum
Coolant connections Intake/return		Pipe thread ISO 228 G 3/4 B (external thread 3/4", flat-sealing)				
Sound pressure level L_{pA} (1 m) at 50/60 Hz	dB	52	52	52	52	54
DC link connection DCP, DCN		2 × hole for M12 Busbar	2 × hole for M12 Busbar	2 × hole for M12 Busbar	2 × hole for M12 Busbar	2 × hole for M12 Busbar
Motor connection U2, V2, W2		Hole for M12	Hole for M12	Hole for M12	Hole for M12	2 × hole for M12
• Conductor cross-section, max. (IEC)	mm^2	2 × 95	2 × 95	2 × 240	2 × 240	4 × 185
PE/GND connection		2 × hole for M12	2 × hole for M12	2 × hole for M12	2 × hole for M12	2 × hole for M12
• Conductor cross-section, max. (IEC)	mm^2	2 × 95	2 × 95	2 × 240	2 × 240	4 × 185

© Siemens 2024

Technical specifications

Line voltage 380 ... 480 V 3 AC DC link voltage 510 ... 720 V DC		Motor Modules				
		6SL3325-1TE32-1AA3	6SL3325-1TE32-6AA3	6SL3325-1TE33-1AA3	6SL3325-1TE35-0AA3	6SL3325-1TE36-1AA3
Cable length, max. [9]						
• Shielded	m (ft)	300 (984)	300 (984)	300 (984)	300 (984)	300 (984)
• Unshielded	m (ft)	450 (1476)	450 (1476)	450 (1476)	450 (1476)	450 (1476)
Dimensions						
• Width	mm (in)	150 (5.91)	150 (5.91)	150 (5.91)	150 (5.91)	265 (10.4)
• Height	mm (in)	746 (29.4)	746 (29.4)	1172 (46.1)	1172 (46.1)	1002 (39.4)
• Depth	mm (in)	545 (21.5)	545 (21.5)	545 (21.5)	545 (21.5)	545 (21.5)
Weight, approx.	kg (lb)	41 (90.4)	41 (90.4)	80 (176)	80 (176)	110 (243)
Frame size		FXL	FXL	GXL	GXL	HXL

[1] Rated power of a typical 6-pole standard induction motor based on I_L or I_H for 400 V 3 AC 50 Hz.

[2] Rated power of a typical 6-pole standard induction motor based on I_L or I_H for 460 V 3 AC 60 Hz.

[3] The base-load current I_L is based on a duty cycle of 110 % for 60 s or 150 % for 10 s with a duty cycle duration of 300 s.

[4] The base-load current I_H is based on a duty cycle of 150 % for 60 s or 160 % for 10 s with a duty cycle duration of 300 s.

[5] Additional notes regarding the correlation between the pulse frequency and maximum output current/output frequency is provided in the SINAMICS Low Voltage Engineering Manual.

[6] The specified power loss represents the maximum value at 100 % utilization. The value is lower under normal operating conditions. To ensure safe dissipation of the minor power loss released to the ambient air, it is important to follow the instructions pertaining to control cabinet installation in the SINAMICS Low Voltage Engineering Manual.

[7] The value applies to coolants comprising water and a mixture of water and antifreeze agent.

[8] The value is valid for water as coolant.
Additional information and notes on other coolants are provided in the SINAMICS Low Voltage Engineering Manual.

[9] Total of all motor cables. Longer cable lengths for specific configurations are available on request.
For additional information, please refer to the SINAMICS Low Voltage Engineering Manual.

© Siemens 2024

Technical specifications

Line voltage 380 ... 480 V 3 AC DC link voltage 510 ... 720 V DC		Motor Modules					
		6SL3325-1TE37-5AA3	6SL3325-1TE38-4AA3	6SL3325-1TE41-0AA3	6SL3325-1TE41-2AA3	6SL3325-1TE41-4AA3	6SL3325-1TE41-4AS3 [1]
Type rating							
• At I_L (50 Hz 400 V) [2]	kW	**400**	**450**	**560**	**710**	**800**	**800**
• At I_H (50 Hz 400 V) [2]	kW	315	400	450	630	710	630
• At I_L (60 Hz 460 V) [3]	hp	600	700	800	1000	1150	1000
• At I_H (60 Hz 460 V) [3]	hp	450	600	700	900	1000	900
Output current							
• Rated current $I_{N\,O}$	A	745	840	985	1260	1405	1330
• Base-load current I_L [4]	A	725	820	960	1230	1370	1310
• Base-load current I_H [5]	A	570	700	860	1127	1257	1150
• Maximum current $I_{max\,O}$	A	1087	1230	1440	1845	2055	2055
DC link current							
• Rated current $I_{N\,DC}$ when supplied via							
- Basic Line Module	A	894	1025	1202	1512	1714	1550
- Active Line Module	A	805	922	1080	1361	1544	1403
• Base-load current $I_{L\,DC}$ [4] when supplied via							
- Basic Line Module	A	871	1000	1170	1474	1670	1525
- Active Line Module	A	784	898	1051	1326	1500	1405
• Base-load current $I_{H\,DC}$ [5] when supplied via							
- Basic Line Module	A	795	853	1048	1345	1532	1676
- Active Line Module	A	716	767	942	1211	1377	1403
Current demand							
• 24 V DC auxiliary power supply	A	1.6	1.6	1.46	1.46	1.46	1.46
DC link capacitance	µF	17400	17400	21000	29000	29000	21000
Pulse frequency [6]							
• Rated frequency	kHz	1.25	1.25	1.25	1.25	1.25	2
• Pulse frequency, max.							
- Without current derating	kHz	1.25	1.25	1.25	1.25	1.25	2
- With current derating	kHz	8	8	8	8	8	4
Power loss, max. [6]							
• At 50 Hz 400 V	kW	5.1	5.75	7.9	9.15	10.2	10.9
• At 60 Hz 460 V	kW	5.61	6.33	8.55	10.05	11.2	12.3
• Dissipated to ambient air	kW	0.2	0.23	0.44	0.56	0.62	0.65
Coolant volume flow [8]	l/min (US gal./min)	16 (4.23)	16 (4.23)	27 (7.13)	27 (7.13)	27 (7.13)	27 (7.13)
Liquid volume of the integrated heat exchanger	dm^3	0.74	0.74	1.56	1.56	1.56	1.56
Pressure drop, typ. [9] for volume flow	Pa	70000	70000	70000	70000	70000	70000
Heat exchanger material		Aluminum	Aluminum	Aluminum	Aluminum	Aluminum	Aluminum
Coolant connections Intake/return		Pipe thread ISO 228 G 3/4 B (external thread 3/4", flat-sealing)					
Sound pressure level L_{pA} (1 m) at 50/60 Hz	dB	54	54	56	56	56	56
DC link connection DCP, DCN		2 × hole for M12 Busbar	2 × hole for M12 Busbar	2 × hole for M12 Busbar	2 × hole for M12 Busbar	2 × hole for M12 Busbar	2 × hole for M12 Busbar
Motor connection U2, V2, W2		2 × hole for M12	2 × hole for M12	2 × hole for M12	2 × hole for M12	2 × hole for M12	2 × hole for M12
• Conductor cross-section, max. (IEC)	mm^2	4 × 185	4 × 185	4 × 240	4 × 240	4 × 240	4 × 240
PE/GND connection		2 × hole for M12	2 × hole for M12	2 × hole for M12	2 × hole for M12	2 × hole for M12	2 × hole for M12
• Conductor cross-section, max. (IEC)	mm^2	4 × 185	4 × 185	Busbar	Busbar	Busbar	Busbar

© Siemens 2024

Technical specifications

Line voltage 380 ... 480 V 3 AC DC link voltage 510 ... 720 V DC		Motor Modules					
		6SL3325-1TE37-5AA3	6SL3325-1TE38-4AA3	6SL3325-1TE41-0AA3	6SL3325-1TE41-2AA3	6SL3325-1TE41-4AA3	6SL3325-1TE41-4AS3 [1]
Cable length, max. [10]							
• Shielded	m (ft)	300 (984)	300 (984)	300 (984)	300 (984)	300 (984)	300 (984)
• Unshielded	m (ft)	450 (1476)	450 (1476)	450 (1476)	450 (1476)	450 (1476)	450 (1476)
Dimensions							
• Width	mm (in)	265 (10.4)	265 (10.4)	295 (11.6)	295 (11.6)	295 (11.6)	295 (11.6)
• Height	mm (in)	1002 (39.4)	1002 (39.4)	1516 (59.7)	1516 (59.7)	1516 (59.7)	1516 (59.7)
• Depth	mm (in)	545 (21.5)	545 (21.5)	545 (21.5)	545 (21.5)	545 (21.5)	545 (21.5)
Weight, approx.	kg (lb)	110 (243)	110 (243)	220 (485)	220 (485)	220 (485)	230 (507)
Frame size		HXL	HXL	JXL	JXL	JXL	JXL

1) This Motor Module has been specifically designed for loads demanding a high dynamic performance. The derating factor k_{IGBT} and the derating characteristics can be ignored (see section "Duty cycles" in the SINAMICS Low Voltage Engineering Manual).

2) Rated power of a typical 6-pole standard induction motor based on I_L or I_H for 400 V 3 AC 50 Hz.

3) Rated power of a typical 6-pole standard induction motor based on I_L or I_H for 460 V 3 AC 60 Hz.

4) The base-load current I_L is based on a duty cycle of 110 % for 60 s or 150 % for 10 s with a duty cycle duration of 300 s.

5) The base-load current I_H is based on a duty cycle of 150 % for 60 s or 160 % for 10 s with a duty cycle duration of 300 s.

6) Additional notes regarding the correlation between the pulse frequency and maximum output current/output frequency is provided in the SINAMICS Low Voltage Engineering Manual.

7) The specified power loss represents the maximum value at 100 % utilization. The value is lower under normal operating conditions. To ensure safe dissipation of the minor power loss released to the ambient air, it is important to follow the instructions pertaining to control cabinet installation in the SINAMICS Low Voltage Engineering Manual.

8) The value applies to coolants comprising water and a mixture of water and antifreeze agent.

9) The value is valid for water as coolant.
Additional information and notes on other coolants are provided in the SINAMICS Low Voltage Engineering Manual.

10) Total of all motor cables. Longer cable lengths for specific configurations are available on request.
For additional information, please refer to the SINAMICS Low Voltage Engineering Manual.

© Siemens 2024

Technical specifications

Line voltage 500 ... 690 V 3 AC DC link voltage 675 ... 1035 V DC		Motor Modules					
		6SL3325-1TG31-0AA3	6SL3325-1TG31-5AA3	6SL3325-1TG32-2AA3	6SL3325-1TG33-3AA3	6SL3325-1TG34-7AA3	6SL3325-1TG35-8AA3
Type rating							
• At I_L (50 Hz 690 V) [1]	kW	**90**	**132**	**200**	**315**	**450**	**560**
• At I_H (50 Hz 690 V) [1]	kW	75	110	160	250	400	450
• At I_L (50 Hz 500 V) [1]	kW	55	90	132	200	315	400
• At I_H (50 Hz 500 V) [1]	kW	55	90	132	200	250	315
• At I_L (60 Hz 575 V) [2]	hp	75	150	200	300	450	600
• At I_H (60 Hz 575 V) [2]	hp	75	125	200	250	450	500
Output current							
• Rated current $I_{N\,O}$	A	100	150	215	330	465	575
• Base-load current I_L [3]	A	95	142	208	320	452	560
• Base-load current I_H [4]	A	89	134	192	280	416	514
• Maximum current $I_{max\,O}$	A	142	213	312	480	678	840
DC link current							
• Rated current $I_{N\,DC}$ when supplied via							
- Basic Line Module	A	122	183	263	403	558	702
- Active Line Module	A	110	165	237	363	502	632
• Base-load current $I_{L\,DC}$ [3] when supplied via							
- Basic Line Module	A	116	173	253	390	544	683
- Active Line Module	A	105	156	229	352	489	616
• Base-load current $I_{H\,DC}$ [4] when supplied via							
- Basic Line Module	A	108	163	234	341	496	627
- Active Line Module	A	98	147	211	308	446	565
Current demand							
• 24 V DC auxiliary power supply	A	1.0	1.0	1.5	1.5	1.6	1.6
DC link capacitance	µF	2800	2800	4200	5800	9670	9670
Pulse frequency [5]							
• Rated frequency	kHz	1.25	1.25	1.25	1.25	1.25	1.25
• Pulse frequency, max.							
- Without current derating	kHz	1.25	1.25	1.25	1.25	1.25	1.25
- With current derating	kHz	7.5	7.5	7.5	7.5	7.5	7.5
Power loss, max. [6]							
• At 50 Hz 690 V	kW	1.15	1.64	2.34	3.38	5.44	5.61
• At 60 Hz 575 V	kW	1.02	1.45	2.05	2.96	5.1	5.45
• Dissipated to ambient air	kW	0.06	0.07	0.09	0.12	0.14	0.16
Coolant volume flow [7]	l/min (US gal./min)	9 (2.38)	9 (2.38)	12 (3.17)	12 (3.17)	16 (4.23)	16 (4.23)
Liquid volume of the integrated heat exchanger	dm^3	0.31	0.31	0.91	0.91	0.74	0.74
Pressure drop, typ. [8] for volume flow	Pa	70000	70000	70000	70000	70000	70000
Heat exchanger material		Stainless steel	Stainless steel	Stainless steel	Stainless steel	Aluminum	Aluminum
Coolant connections Intake/return		Pipe thread ISO 228 G 3/4 B (external thread 3/4", flat-sealing)					
Sound pressure level L_{pA} (1 m) at 50/60 Hz	dB	52	52	52	52	54	54
DC link connection DCP, DCN		2 × hole for M12 Busbar	2 × hole for M12 Busbar	2 × hole for M12 Busbar	2 × hole for M12 Busbar	2 × hole for M12 Busbar	2 × hole for M12 Busbar
Motor connection U2, V2, W2		Hole for M12	Hole for M12	Hole for M12	Hole for M12	2 × hole for M12	2 × hole for M12
• Conductor cross-section, max. (IEC)	mm^2	2 × 95	2 × 95	4 × 240	4 × 240	4 × 185	4 × 185
PE/GND connection		2 × hole for M12	2 × hole for M12	2 × hole for M12	2 × hole for M12	2 × hole for M12	2 × hole for M12
• Conductor cross-section, max. (IEC)	mm^2	2 × 95	2 × 95	2 × 240	2 × 240	4 × 185	4 × 185

© Siemens 2024

Technical specifications

Line voltage 500 ... 690 V 3 AC DC link voltage 675 ... 1035 V DC		Motor Modules					
		6SL3325-1TG31-0AA3	6SL3325-1TG31-5AA3	6SL3325-1TG32-2AA3	6SL3325-1TG33-3AA3	6SL3325-1TG34-7AA3	6SL3325-1TG35-8AA3
Cable length, max. [9]							
• Shielded	m (ft)	300 (984)	300 (984)	300 (984)	300 (984)	300 (984)	300 (984)
• Unshielded	m (ft)	450 (1476)	450 (1476)	450 (1476)	450 (1476)	450 (1476)	450 (1476)
Dimensions							
• Width	mm (in)	150 (5.91)	150 (5.91)	150 (5.91)	150 (5.91)	265 (10.4)	265 (10.4)
• Height	mm (in)	728 (28.7)	728 (28.7)	1172 (46.1)	1172 (46.1)	1002 (39.4)	1002 (39.4)
• Depth	mm (in)	545 (21.5)	545 (21.5)	545 (21.5)	545 (21.5)	545 (21.5)	545 (21.5)
Weight, approx.	kg (lb)	41 (90.4)	41 (90.4)	80 (176)	80 (176)	110 (243)	110 (243)
Frame size		FXL	FXL	GXL	GXL	HXL	HXL

[1] Rated power of a typical 6-pole standard induction motor based on I_L or I_H for 500 V or 690 V 3 AC 50 Hz.

[2] Rated power of a typical 6-pole standard induction motor based on I_L or I_H for 575 V 3 AC 60 Hz.

[3] The base-load current I_L is based on a duty cycle of 110 % for 60 s or 150 % for 10 s with a duty cycle duration of 300 s.

[4] The base-load current I_H is based on a duty cycle of 150 % for 60 s or 160 % for 10 s with a duty cycle duration of 300 s.

[5] Additional notes regarding the correlation between the pulse frequency and maximum output current/output frequency is provided in the SINAMICS Low Voltage Engineering Manual.

[6] The specified power loss represents the maximum value at 100 % utilization. The value is lower under normal operating conditions. To ensure safe dissipation of the minor power loss released to the ambient air, it is important to follow the instructions pertaining to control cabinet installation in the SINAMICS Low Voltage Engineering Manual.

[7] The value applies to coolants comprising water and a mixture of water and antifreeze agent.

[8] The value is valid for water as coolant.
Additional information and notes on other coolants are provided in the SINAMICS Low Voltage Engineering Manual.

[9] Total of all motor cables. Longer cable lengths for specific configurations are available on request.
For additional information, please refer to the SINAMICS Low Voltage Engineering Manual.

© Siemens 2024

Technical specifications

Line voltage 500 ... 690 V 3 AC DC link voltage 675 ... 1035 V DC		Motor Modules					
		6SL3325-1TG37-4AA3	6SL3325-1TG38-0AA3 [1]	6SL3325-1TG38-1AA3	6SL3325-1TG41-0AA3	6SL3325-1TG41-3AA3	6SL3325-1TG41-6AP3 [11]
Type rating							
• At I_L (50 Hz 690 V) [2]	kW	**710**	**800**	**800**	**1000**	**1200**	**1500**
• At I_H (50 Hz 690 V) [2]	kW	630	710	710	900	1000	1260
• At I_L (50 Hz 500 V) [2]	kW	500	560	560	710	900	1000
• At I_H (50 Hz 500 V) [2]	kW	450	500	560	630	800	900
• At I_L (60 Hz 575 V) [3]	hp	700	800	800	1000	1250	1500
• At I_H (60 Hz 575 V) [3]	hp	700	700	700	900	1000	1250
Output current							
• Rated current $I_{N\,O}$	A	735	810	810	1025	1270	1560
• Base-load current I_L [4]	A	710	790	790	1000	1230	1500
• Base-load current I_H [5]	A	657	724	724	917	1136	1370
• Maximum current $I_{max\,O}$	A	1065	1185	1185	1500	1845	2250
DC link current							
• Rated current $I_{N\,DC}$ when supplied via							
- Basic Line Module	A	903	990	990	1250	1550	1903
- Active Line Module	A	808	891	891	1125	1395	1714
• Base-load current $I_{L\,DC}$ [4] when supplied via							
- Basic Line Module	A	870	948	963	1219	1500	1800
- Active Line Module	A	781	870	869	1100	1353	1650
• Base-load current $I_{H\,DC}$ [5] when supplied via							
- Basic Line Module	A	795	885	883	1118	1384	1680
- Active Line Module	A	732	808	796	1009	1250	1550
Current demand							
• 24 V DC auxiliary power supply	A	1.6	1.6	1.46	1.46	1.46	1.46
DC link capacitance	µF	10500	10500	14000	16000	19330	21000
Pulse frequency [6]							
• Rated frequency	kHz	1.25	1.25	1.25	1.25	1.25	1.25
• Pulse frequency, max.							
- Without current derating	kHz	1.25	1.25	1.25	1.25	1.25	1.25
- With current derating	kHz	7.5	7.5	7.5	7.5	7.5	7.5
Power loss, max. [6]							
• At 50 Hz 690 V	kW	7.65	8.47	9.56	10.87	13.49	17.9
• At 60 Hz 575 V	kW	6.67	7.39	8.34	9.55	11.84	15.7
• Dissipated to ambient air	kW	0.2	0.22	0.43	0.53	0.57	0.78
Coolant volume flow [8]	l/min (US gal./min)	16 (4.23)	16 (4.23)	27 (7.13)	27 (7.13)	27 (7.13)	27 (7.13)
Liquid volume of the integrated heat exchanger	dm^3	0.74	0.74	1.56	1.56	1.56	1.56
Pressure drop, typ. [9] for volume flow	Pa	70000	70000	70000	70000	70000	70000
Heat exchanger material		Aluminum	Aluminum	Aluminum	Aluminum	Aluminum	Aluminum
Coolant connections Intake/return		Pipe thread ISO 228 G 3/4 B (external thread 3/4", flat-sealing)					
Sound pressure level L_{pA} (1 m) at 50/60 Hz	dB	54	54	56	56	56	56
DC link connection DCP, DCN		2 × hole for M12 Busbar	2 × hole for M12 Busbar	2 × hole for M12 Busbar	2 × hole for M12 Busbar	2 × hole for M12 Busbar	2 × hole for M12 Busbar
Motor connection U2, V2, W2		2 × hole for M12	2 × hole for M12	2 × hole for M12	2 × hole for M12	2 × hole for M12	2 × hole for M12
• Conductor cross-section, max. (IEC)	mm^2	4 × 185	4 x 185	Busbar	Busbar	Busbar	Busbar
PE/GND connection		2 × hole for M12	2 × hole for M12	2 × hole for M12	2 × hole for M12	2 × hole for M12	2 × hole for M12
• Conductor cross-section, max. (IEC)	mm^2	4 × 185	4 × 185	Busbar	Busbar	Busbar	Busbar

© Siemens 2024

Technical specifications

Line voltage 500 ... 690 V 3 AC DC link voltage 675 ... 1035 V DC		Motor Modules					
		6SL3325-1TG37-4AA3	6SL3325-1TG38-0AA3 [1]	6SL3325-1TG38-1AA3	6SL3325-1TG41-0AA3	6SL3325-1TG41-3AA3	6SL3325-1TG41-6AP3 [11]
Cable length, max. [10]							
• Shielded	m (ft)	300 (984)	300 (984)	300 (984)	300 (984)	300 (984)	300 (984)
• Unshielded	m (ft)	450 (1476)	450 (1476)	450 (1476)	450 (1476)	450 (1476)	450 (1476)
Dimensions							
• Width	mm (in)	265 (10.4)	265 (10.4)	295 (11.6)	295 (11.6)	295 (11.6)	295 (11.6)
• Height	mm (in)	1002 (39.4)	1002 (39.4)	1516 (59.7)	1516 (59.7)	1516 (59.7)	1516 (59.7)
• Depth	mm (in)	545 (21.5)	545 (21.5)	545 (21.5)	545 (21.5)	545 (21.5)	545 (21.5)
Weight, approx.	kg (lb)	110 (243)	110 (243)	220 (485)	220 (485)	220 (485)	230 (507)
Frame size		HXL	HXL	JXL	JXL	JXL	JXL

[1] The device is optimized for a base pulse frequency of 1.25 kHz, for an increased pulse frequency or for certain overloads the derating factor is higher than that for the device with article number 6SL3325-1TG38-1AAx.

[2] Rated power of a typical 6-pole standard induction motor based on I_L or I_H for 500 V or 690 V 3 AC 50 Hz.

[3] Rated power of a typical 6-pole standard induction motor based on I_L or I_H for 575 V 3 AC 60 Hz.

[4] The base-load current I_L is based on a duty cycle of 110 % for 60 s or 150 % for 10 s with a duty cycle duration of 300 s.

[5] The base-load current I_H is based on a duty cycle of 150 % for 60 s or 160 % for 10 s with a duty cycle duration of 300 s.

[6] Additional notes regarding the correlation between the pulse frequency and maximum output current/output frequency are provided in the SINAMICS Low Voltage Engineering Manual.

[7] The specified power loss represents the maximum value at 100 % utilization. The value is lower under normal operating conditions. To ensure safe dissipation of the minor power loss released to the ambient air, it is important to follow the instructions pertaining to control cabinet installation in the SINAMICS Low Voltage Engineering Manual.

[8] The value applies to coolants comprising water and a mixture of water and antifreeze agent.

[9] The value is valid for water as coolant.
Additional information and notes on other coolants are provided in the SINAMICS Low Voltage Engineering Manual.

[10] Total of all motor cables. Longer cable lengths for specific configurations are available on request.
For additional information, please refer to the SINAMICS Low Voltage Engineering Manual.

[11] Additional duty cycle for output frequencies from 5 Hz to 10 Hz: Base-load current = 1460 A, short-time current = 2340 A for 5 s with a duty cycle duration of 600 s. For output frequencies from 1 Hz to 5 Hz, the short-time current is 1900 A for 5 s.

© Siemens 2024

Mounting device for liquid-cooled power units

Overview

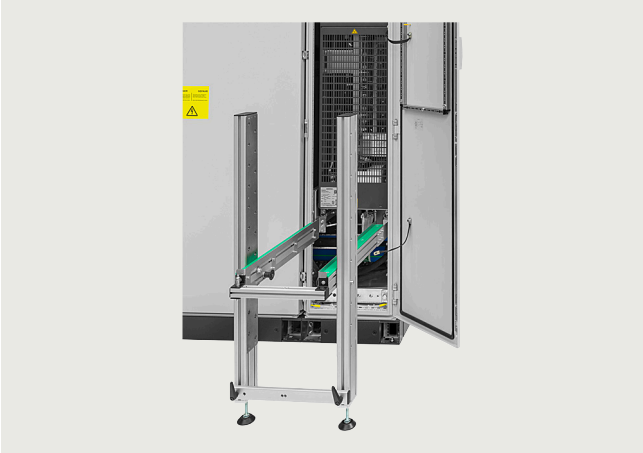

The mounting device is used to install or remove liquid-cooled power units (Power Modules, Line Modules, Motor Modules) into or out of a control cabinet. The mounting device can be used if the power units are mounted on mounting rails, which at the front have two M6 threads at a vertical distance of 20 mm to attach the mounting device.

The mounting device is a mounting aid. It is placed in front of the power unit and attached to the mounting rails below the power unit. The telescopic rails allow the mounting device to be adjusted to the installation height and width of the power unit. The power unit can be removed from the control cabinet after releasing the mechanical and electrical connections and the coolant connections. The power unit is guided and supported by the guide rails on the mounting device. To prevent it toppling over, the power unit must be secured to a crane, tripod, or similar assembly using the lifting lugs or the lifting equipment. The unit can then be lowered down from the mounting device.

Selection and ordering data

Description	Article No.
Mounting device for installing and removing power units	**6SL3766-1CA00-0AA0**

© Siemens 2024

SINAMICS S120 Chassis-2 Format Converter Units

4

4/2 System overview
4/2 Overview
4/4 Function
4/5 Technical specifications

4/6 Air-cooled units
4/6 Technical specifications
4/8 Characteristic curves
4/11 Active Infeeds
4/17 Active Line Modules
4/18 Active Interface Modules
4/21 Motor Modules
4/26 OEM kits for control cabinet installation
4/27 Mechanical Installation Kits
4/28 DC-Busbar Kits Basic
4/29 DC-Busbar Kits Fuse
4/30 PE busbar kits
4/31 Busbar Connection Kits
4/32 Line Connection Kit for Active Interface Modules
4/33 Motor Connection Kits
4/34 Protection Kits
4/36 Installation Ramp Kit

© Siemens 2024

Overview

With its separate power unit and Control Unit, the SINAMICS S120 drive system can be perfectly adapted to a wide variety of different drive tasks.

The Control Unit is selected according to the number of drives to be controlled and the required performance level, while the power unit must be rated to meet requirements regarding regenerative feedback capability or energy exchange.
The connection between the Control Unit and power unit is made very simply using the DRIVE-CLiQ digital system interface.

The following devices are available in chassis-2 format:

- Active Infeeds (Active Line Module and Active Interface Module)
- Motor Modules

Highlights of the built-in units in chassis-2 format

- Compact, innovative mechanical design with reduced footprint
- Rated pulse frequency of the Motor Modules 2.5 kHz
- Optimized derating
- Innovative cooling concept
- Condition monitoring
- Very easy replacement of the device fans

Active Infeed

Active Infeeds comprise an Active Line Module and an Active Interface Module. Active Line Modules contain the central line infeed for the intermediate DC circuit. They can supply energy and return regenerative energy to the supply system.

Active Line Modules produce a stabilized DC voltage that remains constant regardless of fluctuations in the line voltage if the line voltage remains within the permissible tolerances. Active Line Modules in combination with an Active Interface Module draw a virtually sinusoidal current from the supply system. Almost no harmonics occur.

The total harmonic distortion factors of the current THD(I) and voltage THD(U) are typically in the range of approx. 3 % for rated current. THD(I) is calculated according to IEEE 519 (2014) and THD(U) according to IEC 61000-2-4 (2002). The stringent limit values of IEEE 519 (2014) are typically complied with.

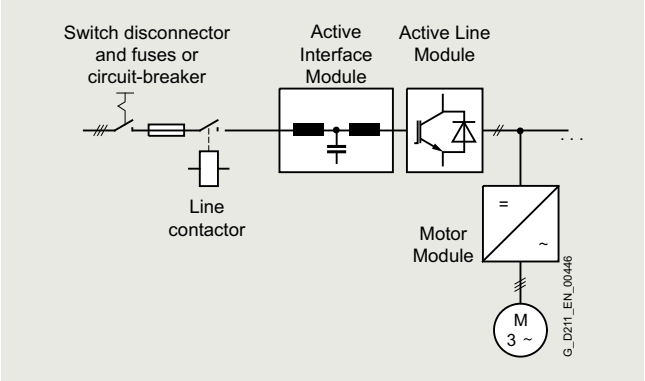

Motor Modules

A voltage DC link and an inverter for supplying a motor are integrated in the Motor Module.

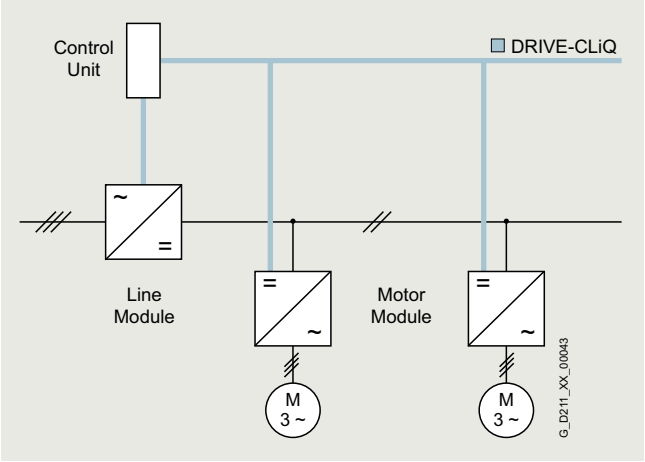

Motor Modules are designed for multi-axis drive systems and are controlled by either a CU320-2 Control Unit or a SIMOTION D Control Unit. Motor Modules are interconnected through the DC link.

One or several Motor Modules are supplied with energy for the motors via the DC link. Both synchronous and asynchronous motors can be operated.

Since the Motor Modules share the same DC link, they can exchange energy with one another, i.e. if one Motor Module operating in the generator mode produces energy, the energy can be used by another Motor Module operating in the motor mode. The DC link is supplied with line supply voltage by a Line Module.

© Siemens 2024

Overview

Control Units

The control intelligence for all the drive axes integrated in the multi-axis group is combined in the Control Units. They also feature drive-related inputs/outputs and interfaces for communicating with higher-level controllers. Control Units are available with different ranges of functions and with different performance levels.

System components

The structure of the drive system is defined by selecting the Control Unit, Line Modules and Motor Modules. The additional components provided allow optimum adaptation of the drive system to the application.

These components are subdivided into:

- **Line-side components**, e.g. components for pre-charging
- **DC link components**, e.g. DC link fuses
- **Motor-side components**, e.g. motor reactors and dv/dt filters plus VPL
- **Supplementary system components**, e.g. Terminal Modules, Operator Panels, and Communication Boards
- **Encoder system interface** for connecting various encoder types to SINAMICS S120

DRIVE-CLiQ – the digital interface between the components

The SINAMICS S120 components, including the motors and encoders, are equipped with the high-performance DRIVE-CLiQ system interface. DRIVE-CLiQ interfaces are used, for example, to connect Line Modules and Motor Modules to the Control Unit, as well as Terminal Modules and Sensor Modules to the drive system – simply and efficiently. Motors that also have this interface can be directly connected to the drive system.

Converter boards (Sensor Modules) for converting standard encoder signals to DRIVE-CLiQ are available for third-party motors or retrofit applications.

The electronic rating plate

An important digital linkage element of the SINAMICS S120 drive system are the electronic rating plates integrated in every component. They allow all drive components to be automatically identified via the DRIVE-CLiQ link.

The electronic rating plate contains all the relevant technical data about that particular component. In addition to the technical data, the rating plate includes logistical data (manufacturer ID, article number and ID). Since this data can be called up electronically on site or remotely, all the components used in a machine can always be individually identified, which helps simplify servicing.

Coated modules

The following devices are equipped as standard with coated modules:

- Devices in chassis-2 format
- Control Units
- Sensor Modules
- Terminal Modules
- Advanced Operator Panel (AOP30)

The coating on the modules protects the sensitive SMD components against corrosive gases, chemically active dust and moisture.

Nickel-plated busbars

All of the copper busbars used are nickel-plated in order to achieve the best possible immunity to environmental effects. Furthermore, there is no need to clean the contacts on the customer terminals as otherwise required for bare copper connections.

Note:
For some components, parts of the copper busbars cannot be nickel-plated for technical reasons.

© Siemens 2024

Function

Communication with higher-level controller

As customer interface to a higher-level control, as standard there is a PROFIBUS or PROFINET communication interface on the Control Unit CU320-2; there are also expansions such as the Terminal Module TM31, the Terminal Board TB30 and modules to communicate via CANopen or EtherNet/IP.

These interfaces can be used to connect the system to the higher-level controller using analog and digital signals, or to connect additional units.

For additional information, please refer to the SINAMICS Low Voltage Engineering Manual.

Open-loop and closed-loop control functions

SINAMICS S120 can use a dynamic, high-precision closed-loop vector control (drive object type VECTOR), or a highly dynamic closed-loop servo control (drive object type SERVO).

Software and protective functions

The software functions available as standard are described below:

Software and protective functions	Description
Setpoint input	The setpoint can be specified both internally and externally; internally as a fixed setpoint, motorized potentiometer setpoint or jog setpoint, externally via the communications interface or an analog input. The internal fixed setpoint and the motorized potentiometer setpoint can be switched or adjusted via control commands from any interface.
Motor identification	The automatic motor identification function makes commissioning faster and easier and optimizes closed-loop control of the drive.
Ramp-function generator	A user-friendly ramp-function generator with separately adjustable ramp-up and ramp-down times, together with adjustable rounding times in the lower and upper speed ranges, allows the drive to be smoothly accelerated and braked. This results in a good speed control response and contributes to the reduction of stress on the mechanical system. The down ramp can be parameterized separately for a quick stop.
$V_{dc\ max}$ controller	The $V_{dc\ max}$ controller automatically prevents overvoltage in the DC link, if the set down ramp is too short, for example. This may also extend the set ramp-down time. Note: This function only makes sense for single-axis applications.
Kinetic buffering (KIP)	For brief line supply failures, the kinetic energy of the rotating drive is used to buffer the DC link and therefore prevents fault trips. The converter remains operational as long as the drive can provide regenerative energy as a result of its motion and the DC link voltage does not drop below the shutdown threshold. When the line supply recovers within this time, the drive is smoothly accelerated up to its setpoint speed again.
Automatic restart	The automatic restart switches the drive on again when the power is restored after a power failure, and ramps up to the current speed setpoint.
Flying restart	The flying restart function allows the converter to be switched to a motor that is still turning. With the voltage sensing capability provided by the optional VSM10, the flying restart time for large asynchronous motors can be significantly reduced because the motor does not need to be de-magnetized.
Technology controller (PID)	Using the technology controller (PID controller) function module, level or flow controls and complex tension controls can be implemented, for example. The existing D component can act both on the system deviation as well as on the actual value (factory setting). The P, I, and D components are set separately.
Free function blocks (FFB)	Using the freely programmable function blocks, it is easy to implement logic and arithmetic functions for controlling the SINAMICS drive. The blocks can be programmed at the operator panel or the STARTER commissioning tool.
Drive Control Chart (DCC)	SINAMICS DCC comprises the block library, so-called DCB Drive Control Blocks and the DCC Editor for graphical interconnection of blocks. SINAMICS DCC is primarily employed to solve arithmetic and control-related tasks or logic functions associated with complex applications. In addition to the DCB Standard library, the DCB Extension library can also be used to create applications. The DCB Extension library is comprised of freely programmable blocks which are created for specific applications using DCB Studio and are then graphically interconnected with the DCC Editor in a similar fashion to standard blocks.
SINAMICS Technology Extensions (SINAMICS TEC)	SINAMICS Technology Extensions are configurable firmware expansions of Siemens that are specifically created for use in a customized application with special requirements. This functionality can therefore be subsequently installed as an add-on to the standard scope of firmware functions.
I^2t sensing for motor protection	A motor model stored in the converter software calculates the motor temperature based on the current speed and load. More exact sensing of the temperature, which also takes into account the influence of the ambient temperature, is possible by means of direct temperature sensing using Pt1000/KTY84 sensors in the motor winding.
Motor temperature evaluation	Motor protection by evaluating a KTY84, PTC, Pt100 or Pt1000 temperature sensor. When a KTY84 temperature sensor is connected, the limit values can be set for alarm or shutdown. When a PTC thermistor is connected, the system reaction to triggering of the thermistor (alarm or trip) can be defined.
Motor blocking protection	A blocked motor is detected and protected against thermal overloading by a fault trip.
Brake control	"Simple brake control" for control of holding brakes: The holding brake is used to secure drives against unwanted motion when deactivated. "Extended brake control" function module for complex brake control, e.g. for motor holding brakes and operational brakes: When braking with a feedback signal, the brake control reacts to the feedback signal contacts of the brake.
Write protection	Write protection to prevent unintentional changing of the setting parameters (without password function).
Know-how protection	Know-how protection for encrypting stored data, e.g. to protect configuration know-how, and to protect against changes and duplication (with password function)
Web server	The web server provides information about the drive unit via its web pages. The web server is accessed using an internet browser via unsecured (http) or secured transfer protocol (https).

© Siemens 2024

Function

Power unit protection

Power unit protection	Description
Ground fault monitoring at the output	A ground fault at the output is detected by a total current monitor and results in shutdown in grounded systems.
Electronic short-circuit protection at the output	A short-circuit at the output (e.g. at the converter output terminals, in the motor cable or in the motor terminal box) is detected and the converter shuts down with "fault".
Thermal overload protection	An alarm is issued first when the overtemperature threshold responds. If the temperature continues to rise, the unit either shuts down or independently adjusts the pulse frequency or output current so that thermal load is reduced. Once the cause of the fault has been eliminated (e.g. cooling has been improved), the original operating values are automatically resumed.

Technical specifications

The most important directives and standards are listed below. These are used as the basis for the SINAMICS S120 built-in units in chassis format and they must be carefully observed to achieve an EMC-compliant configuration that is safe both functionally and in operation.

European directives	
2014/35/EU	Low-voltage Directive: Directive of the European Parliament and Council of February 26, 2014 for the harmonization of the laws of the member states relating to the provision of electrical equipment designed for use within certain voltage limits on the market (recast)
2014/30/EU	EMC Directive: Directive of the European Parliament and Council of February 26, 2014 for the harmonization of the laws of the member states relating to electromagnetic compatibility (recast)
2006/42/EC	Machinery Directive: Directive of the European Parliament and Council of May 17, 2006, on machinery and amending Directive 95/16/EC (recast)
2011/65/EU	RoHS II Directive: Directive of the European Parliament and of the Council of 8 June 2011 on the restriction of the use of certain hazardous substances in electrical and electronic equipment (recast)
European standards	
EN ISO 3744	Acoustics – Determination of sound power levels and sound energy levels of noise sources using sound pressure – Engineering methods for an essentially free field over a reflecting plane
EN ISO 13849-1	Safety of machinery – Safety-related parts of control systems Part 1: General principles for design (EN ISO 13849-1: 2006) (replaces EN 954-1)
EN 60146-1-1	Semiconductor converters – General requirements and line-commutated converters Part 1-1: Specification of basic requirements
EN 60204-1	Safety of machinery – Electrical equipment of machines Part 1: General requirements
EN 60529	Degrees of protection provided by enclosures (IP code)
IEC 61508-1	Functional safety of electrical/electronic/programmable electronic safety-related systems Part 1: General requirements
IEC 61508-2	Functional safety of electrical/electronic/programmable electronic safety-related systems Part 2: Requirements for electrical/electronic/programmable electronic safety-related systems
IEC 61508-3	Functional safety of electrical/electronic/programmable electronic safety-related systems Part 3: Software requirements
EN 61800-2	Adjustable speed electrical power drive systems Part 2: General requirements – Rating specifications for low voltage adjustable frequency AC power drive systems
EN 61800-3	Adjustable speed electrical power drive systems Part 3: EMC requirements and specific test methods
EN 61800-5-1	Adjustable speed electrical power drive systems Part 5: Safety requirements Main section 1: Electrical and thermal requirements
EN 61800-5-2	Adjustable speed electrical power drive systems Part 5-2: Safety requirements – Functional safety (IEC 61800-5-2: 2007)
North American standards	
UL 508A	Industrial Control Panels
UL 508C	Power Conversion Equipment
UL 61800-5-1	Adjustable Speed Electrical Power Drive Systems - Part 5-1: Safety requirements – Electrical, thermal and energy
CSA C22.2 No. 14	Industrial Control Equipment
Certificates of suitability	
cULus, cURus	Testing by UL (Underwriters Laboratories, www.ul.com) according to UL and CSA standards

Test codes and UL files:
(→ Appendix, approvals)

© Siemens 2024

Technical specifications

General technical specifications

Unless clearly specified otherwise, the following technical data are valid for all the following components of the air-cooled SINAMICS S120 drive system in chassis-2 format.

Electrical specifications	
Line voltages	380 ... 480 V 3 AC ±10 % (-15 % < 1 min)
Line system configurations	Grounded TN/TT systems or non-grounded IT systems
Line frequency	47 ... 63 Hz
Overvoltage category	III acc. to EN 61800-5-1
Electronics power supply	24 V DC, -15 % +20 % implemented as PELV circuit acc. to EN 61800-5-1 Ground = negative pole grounded via the electronics
Rated short-circuit current Acc. to IEC, in conjunction with the specified fuses or circuit breakers	100 kA
Rated short-circuit current SCCR (Short Circuit Current Rating) Acc. to UL61800-5-1, in conjunction with the specified fuses or circuit breakers	100 kA
Control method	Vector/Servo control with and without encoder or V/f control
Fixed speeds	15 fixed speeds plus 1 minimum speed, parameterizable (in the default setting, 3 fixed setpoints plus 1 minimum speed are selectable using terminal strip/PROFIBUS/PROFINET)
Skippable speed ranges	4, parameterizable
Setpoint resolution	0.001 r/min digital (14 bits + sign) 12 bits analog
Braking operation	With Active Line Modules (energy recovery). Braking by means of a Motor Module.
Mechanical specifications	
Degree of protection	IP00
Protection class	I acc. to EN 61800-5-1
Touch protection	EN 50274/DGUV regulation 3 when used as intended
Cooling method	Forced air cooling AF according to EN 60146

© Siemens 2024

Technical specifications

Ambient conditions	Storage [1]	Transport [1]	Operation
Ambient temperature	-25 ... +55 °C (-13 ... 131 °F) Class 1K4 acc. to EN 60721-3-1 (1997)	-25 ... +70 °C (-13 ... +158 °F) Class 2K4 acc. to EN 60721-3-2 (1997)	• -10 ... +45 °C (14 ... 113 °F) at installation altitude ≤ 1000 m (3281 ft) above sea level without derating • -10 ... +40 °C (14 ... 104 °F) at installation altitude ≤ 2000 m (6562 ft) above sea level without derating • > 45 ... +60 °C (113 ... 140 °F) at installation altitude ≤ 2000 m (6562 ft) above sea level, see derating data Control Units, supplementary system components, and Sensor Modules: 0 ... 55 °C (32 ... 131 °F) (for operation in a control cabinet) DC link components and motor-side components: 0 ... 55 °C (32 ... 131 °F)
Relative humidity Condensation, splashwater, and ice formation not permitted (EN 60204, Part 1)	5 ... 95 % Class 1K4 acc. to EN 60721-3-1 (1997)	5 ... 95 % at 40 °C (104 °F) Class 2K3 acc. to EN 60721-3-2 (1997)	5 ... 95 % Class 3K3 acc. to EN 60721-3-3 (2002)
Environmental class/harmful chemical substances	Class 1C2 acc. to EN 60721-3-1 (1997)	Class 2C2 acc. to EN 60721-3-2 (1997)	Class 3C2 acc. to EN 60721-3-3 (2002)
Organic/biological influences	Class 1B1 acc. to EN 60721-3-1 (1997)	Class 2B1 acc. to EN 60721-3-2 (1997)	Class 3B1 acc. to EN 60721-3-3 (2002)
Mechanically active substances	Class 1S1 acc. to EN 60721-3-1 (1997)	Class 2S1 acc. to EN 60721-3-2 (1997)	Class 3S1 acc. to EN 60721-3-3 (2002)
Degree of pollution	2 acc. to EN 61800-5-1		
Installation altitude	Up to 2000 m (6562 ft) above sea level without derating > 2000 m (6562 ft) above sea level, see derating data		
Mechanical strength	**Storage [1]**	**Transport [1]**	**Operation**
Vibratory load	–	Class 2M2 acc. to EN 60721-3-2 (1997)	Test values acc. to EN 60068-2-6 test Fc: • 10 ... 58 Hz with constant deflection 0.075 mm • 58 ... 150 Hz with constant acceleration 9.81 m/s^2 (1 × *g*)
Shock load	–	Class 2M2 acc. to EN 60721-3-2 (1997)	Test values according to EN 60068-2-27 test Ea: 98 m/s^2 (10 × *g*)/20 ms
Compliance with standards			
Conformances/ certificates of suitability, acc. to	CE (EMC Directive 2014/30/EU, Low Voltage Directive 2014/35/EU, and Machinery Directive 2006/42/EC for functional safety) RCM, RoHS II, cULus (only for devices connected to line voltages 380 ... 480 V 3 AC and 500 ... 600 V 3 AC)		
Radio interference suppression	SINAMICS S120 chassis-2 format units are not designed for connection to the public grid (first environment). Radio interference suppression is compliant with the EMC product standard for variable-speed drives EN 61800-3, "second environment" (industrial line supplies). EMC disturbances can occur when connected to the public grid. However, if additional measures are taken (e.g. → line filter), it can also be operated in the "first environment". For additional information, see the SINAMICS Low Voltage Engineering Manual.		

Deviations from the specified class are underlined.

[1] In transport packaging.

© Siemens 2024

Characteristic curves

Derating data in chassis-2 format

Air-cooled SINAMICS S120 units in chassis-2 format and the associated system components are rated for an ambient temperature of 45 °C and installation altitudes up to 1000 m above sea level.

At ambient temperatures > 45 °C, the output current must be reduced. Ambient temperatures above 60 °C are not permissible.

At installation altitudes > 2000 m above sea level, it must be taken into account that the air pressure, and therefore air density, decreases as the height increases. As a consequence, the cooling efficiency and the insulation capacity of the air also decrease.

Due to the reduced cooling efficiency, it is necessary, on the one hand, to reduce the ambient temperature and on the other hand, to reduce the heat loss in the built-in unit by reducing the output current, whereby ambient temperatures lower than 45 °C may be offset to compensate.

The following table lists the permissible output currents depending on the installation altitude and ambient temperature. The specified values already include a permitted compensation in respect of installation altitude and ambient temperatures < 40 °C – temperature at the air intake of the built-in unit.

The values apply under the precondition that a cooling air flow through the devices is guaranteed as specified in the technical specifications.

As an additional measure for installation altitudes from 2000 m up to 5000 m, an isolating transformer is required in order to reduce transient overvoltages according to EN 60664-1.
For additional information, please refer to the SINAMICS Low Voltage Engineering Manual.

Current-derating factors for SINAMICS S120 chassis-2 units as a function of the ambient/air intake temperature and the installation altitude

Installation altitude above sea level	**Current derating factor** (as a percentage of the rated current) for an ambient/air intake temperature of								
m (ft)	20 °C (68 °F)	25 °C (77 °F)	30 °C (86 °F)	35 °C (95 °F)	40 °C (104 °F)	45 °C (113 °F)	50 °C (122 °F)	55 °C (131 °F)	60 °C (140 °F)
0 ... 1000 (0 ... 3281)							**83 %**	**69 %**	**54 %**
1001 ... 1500 (3284 ... 4921)						**98 %**	**81 %**	**67 %**	**52 %**
1501 ... 2000 (4925 ... 6562)						**93 %**	**78 %**	**65 %**	**50 %**
2001 ... 2500 (6565 ... 8202)			100 %		**96 %**				
2501 ... 3000 (8205 ... 9843)				**99 %**					
3001 ... 3500 (9846 ... 11483)									
3501 ... 4000 (11486 ... 13123)			**96 %**						
4001 ... 4500 (13127 ... 14764)		**97 %**							
4501 ... 5000 (14767 ... 16404)	**98 %**								

© Siemens 2024

Characteristic curves

Current derating for Motor Modules in chassis-2 format as a function of the pulse frequency

To reduce motor noise or to increase output frequency, the pulse frequency can be increased relative to the factory setting (2.5 kHz). When the pulse frequency is increased, the derating factor of the output current must be taken into account. This derating factor must be applied to the currents specified in the technical specifications.

For additional information, please refer to the SINAMICS Low Voltage Engineering Manual.

The following table lists the rated output currents of the Motor Modules in chassis-2 format with pulse frequency set at the factory as well as the current derating factors (permissible output currents referred to the rated output current) for higher pulse frequencies.

Derating factor of the output current as a function of the pulse frequency for units with a rated pulse frequency of 2.5 kHz

Motor Module	Type rating at 400 V	Output current at 2.5 kHz	**Derating factor at pulse frequency**			
6SL3321-...	kW	A	4 kHz	5 kHz	7.5 kHz	8 kHz
380 ... 480 V 3 AC						
1TE36-6AA0	315	655	78 %	67 %	48 %	45 %
1TE37-4AA0	355	740	78 %	67 %	48 %	45 %
1TE38-1AA0	400	840	78 %	67 %	48 %	45 %
1TE38-8AA0	450	910	78 %	67 %	48 %	45 %
1TE41-0AA0	500	975	78 %	67 %	48 %	45 %
1TE41-1AA0	560	1075	78 %	67 %	48 %	45 %
1TE41-2AA0	630	1200	78 %	67 %	48 %	45 %
1TE41-3AA0	710	1325	78 %	67 %	48 %	45 %
1TE41-5AA0	800	1495	75 %	62 %	39%	36 %

The following tables list the maximum achievable output frequency as a function of the pulse frequency.

Maximum output frequencies achieved by increasing the pulse frequency

The adjustable pulse frequencies – and therefore the output frequencies that can be achieved with the factory-set current controller clock cycles – are listed below.

Current controller clock cycle T_I	**Adjustable pulse frequency f_p**	**Max. achievable output frequency f_A**		
		V/f mode	**Vector mode**	**Servo mode**
400 µs	2.5 kHz	208 Hz	208 Hz	–
	5.0 kHz	416 Hz	300 Hz	–
	7.5 kHz	550 Hz [1)]	300 Hz	–

[1)] With the "High output frequencies" license, which can be ordered as option J01 on the CompactFlash card for SINAMICS S120, the maximum output frequency is increased up to 650 Hz. For more information, see https://support.industry.siemens.com/cs/document/104020669

© Siemens 2024

Characteristic curves

Overload capability

SINAMICS S120 built-in units have an overload reserve, e.g. to handle breakaway torques. If larger surge loads occur, this must be taken into account in the configuration. For drives with overload requirements, the appropriate base-load current must therefore be used as a basis for the required load.

The permissible overload levels are valid under the prerequisite that the drive units are operated with their base-load current before and after the overload condition based on a duty cycle duration of 300 s.

Another precondition is that the Motor Modules are operated at their factory-set pulse frequency at output frequencies >10 Hz.

For temporary, periodic duty cycles with high variations of load within the duty cycle, the relevant sections of the SINAMICS Low Voltage Engineering Manual must be observed.

Motor Modules in chassis-2 format

The base-load current for a low overload I_L is based on a duty cycle of 110 % for 60 s.

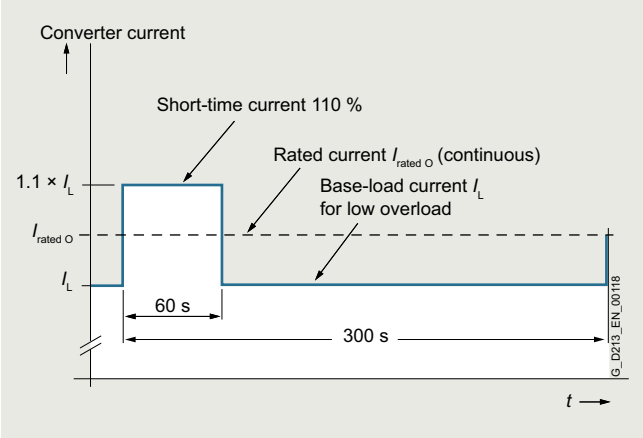

Low overload

The base-load current for a high overload I_H is based on a duty cycle of 150 % for 60 s.

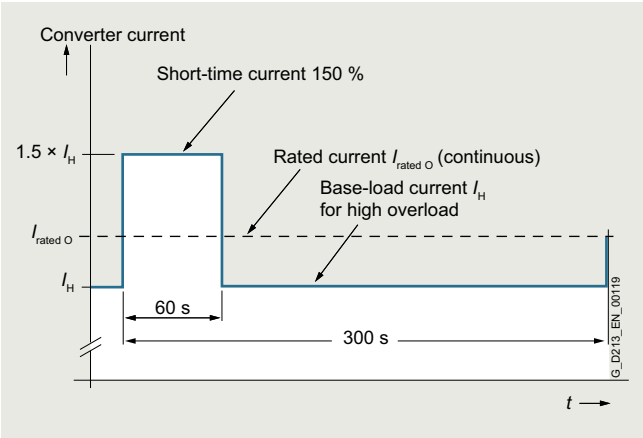

High overload

The base-load current for duty cycle I_{S6} is based on a duty cycle of 200 % for 6 s.

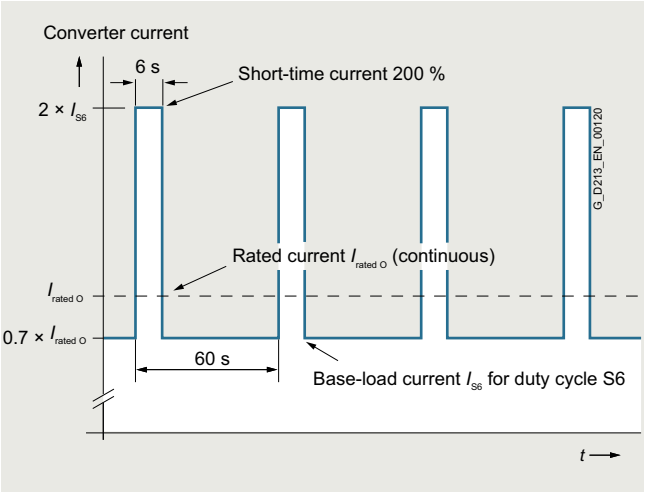

Duty cycle S6 with initial load with a duty cycle duration of 60 s

Active Line Modules in chassis-2 format

The base-load current for low overload I_{L_DC} is based on a duty cycle of 115 % for 60 s with a duty cycle duration of 300 s, the maximum current I_{max_DC} can flow for 5 s.

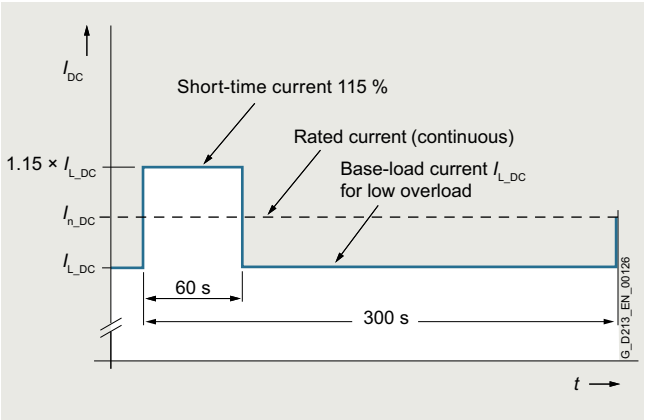

Low overload

The duty cycle with maximum current I_{max_DC} is based on a duty cycle of 150 % for 5 s with a duty cycle duration of 300 s.

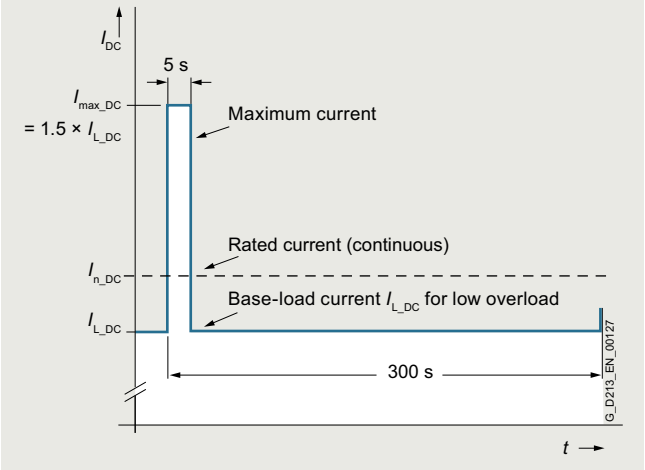

Duty cycle with maximum current

© Siemens 2024

Overview

An Active Line Module in chassis-2 format is offered and supplied with the associated Active Interface Module in chassis-2 format as a package with the designation "Active Infeed".

The article numbers of the individual components (Active Interface Module in chassis-2 format and Active Line Module in chassis-2 format) are listed in the table below:

Active Infeed in chassis-2 format	**Rated power at 400 V**	**Active Interface Module in chassis-2 format**	**Active Line Module in chassis-2 format**
6SL3341-...	kW	6SL3301-...	6SL3331-...
7TE35-6AA0	355	7TE36-4AA0	7TE35-6AA0
7TE36-4AA0	400	7TE36-4AA0	7TE36-4AA0
7TE37-5AA0	450	7TE41-0AA0	7TE37-5AA0
7TE38-4AA0	500	7TE41-0AA0	7TE38-4AA0
7TE38-8AA0	560	7TE41-0AA0	7TE38-8AA0
7TE41-0AA0	630	7TE41-0AA0	7TE41-0AA0
7TE41-2AA0	710	7TE41-4AA0	7TE41-2AA0
7TE41-3AA0	800	7TE41-4AA0	7TE41-3AA0
7TE41-4AA0	900	7TE41-4AA0	7TE41-4AA0

Note:
The pre-charging input circuit that is necessary for operation, comprised of resistors, a pre-charge contactor and a main contactor, must be provided separately. The pre-charge contactor is activated from the Active Line Module.

Selection and ordering data

Rated power at 400 V	Rated infeed/ regenerative feedback current	**Active Infeed**
kW	A	Article No.
Line voltage 380 ... 480 V 3 AC		
355	560	**6SL3341-7TE35-6AA0**
400	635	**6SL3341-7TE36-4AA0**
450	745	**6SL3341-7TE37-5AA0**
500	840	**6SL3341-7TE38-4AA0**
560	900	**6SL3341-7TE38-8AA0**
630	985	**6SL3341-7TE41-0AA0**
710	1110	**6SL3341-7TE41-2AA0**
800	1260	**6SL3341-7TE41-3AA0**
900	1405	**6SL3341-7TE41-4AA0**

© Siemens 2024

Overview

The self-commutated infeed/regenerative feedback units act as step-up converters and generate a stabilized DC link voltage that is 1.5x greater (factory setting) than the nominal voltage of the distribution system. In this way, the connected Motor Modules are decoupled from the line voltage. This improves the dynamic response and control quality because line tolerances and fluctuations do not affect the motor voltage.

If required, the Active Line Modules can also provide reactive power compensation.

Active Line Modules are designed for connection to grounded TN/TT and non-grounded IT systems.

Active Line Modules in chassis-2 format are always operated together with the associated Active Interface Modules in chassis-2 format. The pre-charging input circuit, comprising resistors and pre-charge contactor, that is necessary for operation must be provided separately. The pre-charge contactor is activated from the Active Line Module.

Design

The Active Line Modules in chassis-2 format feature the following interfaces as standard:

- 1 line supply connection
- 1 connection for the 24 V DC electronics power supply
- 1 DC link connection (DCP, DCN) for supplying the connected Motor Modules
- 3 DRIVE-CLiQ sockets
- 1 temperature sensor input for KTY84-130, Pt1000, PTC or Pt100
- 1 connection for the fan supply
- 1 PE/protective conductor connection

The status of the Active Line Modules is indicated via three LEDs.

The scope of supply of the Active Line Modules includes:

- DRIVE-CLiQ cable to connect to a Control Unit
- DRIVE-CLiQ cable to connect the Control Unit to the first Motor Module
- 1 set of warning labels in 30 languages (BG, CN, CZ, DE, DK, EE, ES, FI, FR, GB, GR, HU, IE, IS, IT, JP, KR, LT, LV, MT, NL, NO, PL, PT, RO, RU, SE, SI, SK, TR)

Parallel connection for power increase

To increase the power, a parallel connection of up to six Active Line Modules in chassis-2 format with the same power is possible. You must observe the following rules:

- Up to 6 identical Active Line Modules in chassis-2 format can be connected in parallel.
- Each Active Line Module in chassis-2 format requires its own Active Interface Module in chassis-2 format.
- A common Control Unit is required whenever the modules are connected in parallel. For more than 4 power units, these must be distributed as symmetrically as possible between at least two DRIVE-CLiQ ports (e.g. 3 x 2 Active Line Modules in series or at least 2 x 3 Active Line Modules in series).
- For multiple infeed units, power must be supplied to the systems from a common infeed point, i.e. different supply systems are not permitted.
- The Active Line Modules in chassis-2 format must supply a shared DC link.
- A derating factor of 5 % must be taken into consideration, regardless of the number of modules connected in parallel.

Note:

No mixed operation possible!
It is only possible to connect identical power units in parallel if all power units have the same hardware version. Mixed operation of an Active Line Module in chassis format (Article No. 6SL3330-xxxxx–xAAx) and an Active Line Module in chassis-2 format (Article No. 6SL3331-xxxxx–xAA0) is not possible.

Selection and ordering data

Rated power at 400 V	Rated infeed/regenerative feedback current	**Active Line Module**
kW	A	Article No.
Line voltage 380 ... 480 V 3 AC		
355	560	**6SL3331-7TE35-6AA0**
400	635	**6SL3331-7TE36-4AA0**
450	745	**6SL3331-7TE37-5AA0**
500	840	**6SL3331-7TE38-4AA0**
560	900	**6SL3331-7TE38-8AA0**
630	985	**6SL3331-7TE41-0AA0**
710	1110	**6SL3331-7TE41-2AA0**
800	1260	**6SL3331-7TE41-3AA0**
900	1405	**6SL3331-7TE41-4AA0**

Description	Article No.
Accessories for re-ordering	
Dust protection blanking plugs (50 units) For DRIVE-CLiQ port	**6SL3066-4CA00-0AA0**

© Siemens 2024

Integration

The Active Line Modules in chassis-2 format communicate with the higher-level control module via DRIVE-CLiQ. This control module can be:

- A CU320-2 Control Unit
- A SIMOTION D Control Unit

An external 24 V DC power supply is required to operate the Active Line Modules.

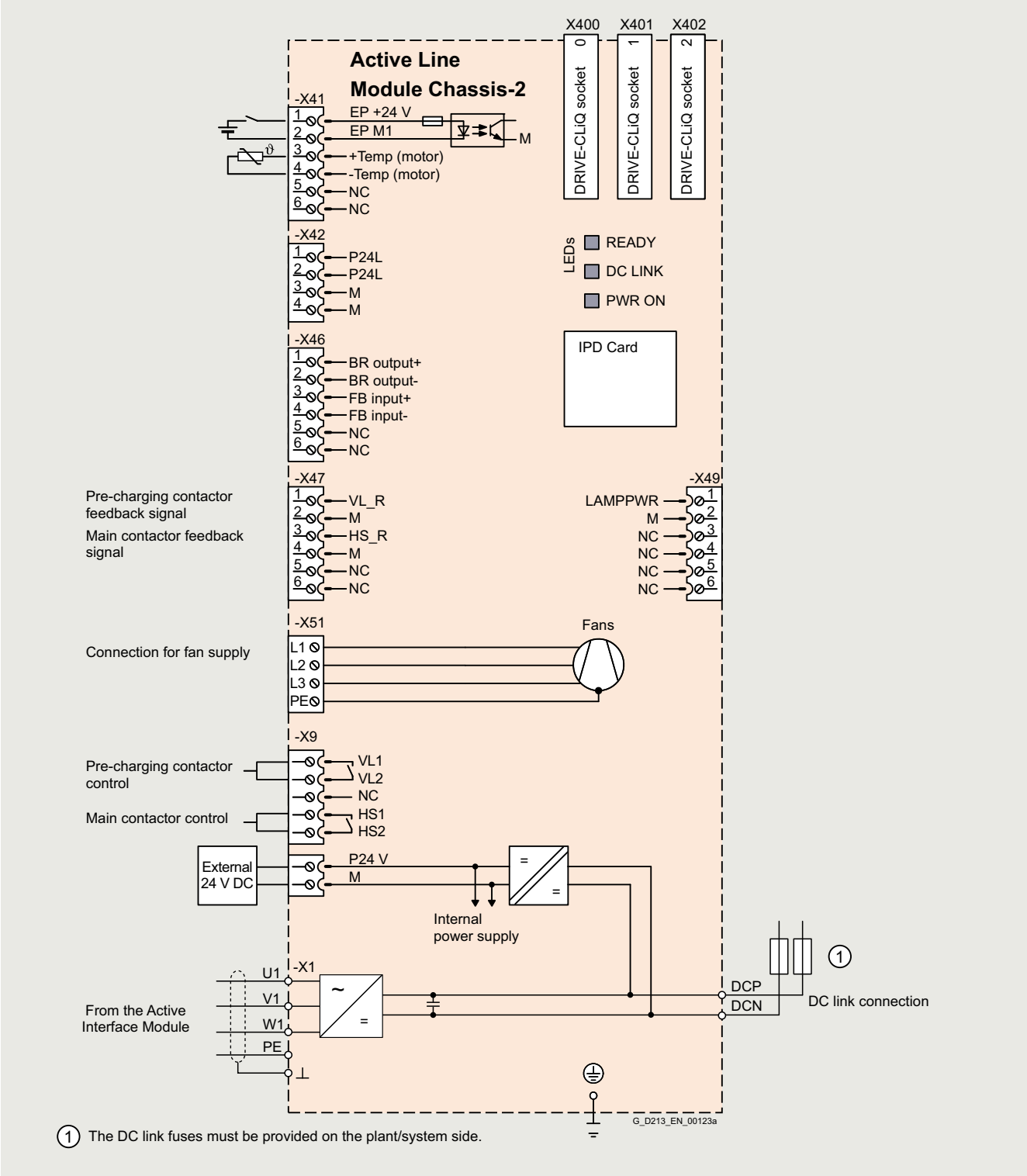

Connection example of Active Line Module in chassis-2 format

© Siemens 2024

Technical specifications

General technical specifications

Electrical specifications	
Line power factor	
• Basic fundamental (cos φ_1)	1 (factory setting), can be altered by inputting a reactive current setpoint
• Total (λ)	1 (factory setting)
Efficiency	> 97.5 % (including Active Interface Module)
DC link voltage	The DC link voltage is regulated and can be adjusted as a voltage decoupled from the line voltage. Factory setting of the DC link voltage: 1.5 × line voltage
Radio interference suppression	
• Standard (Active Line Module with Active Interface Module)	Category C3 acc. to EN 61800-3

© Siemens 2024

Technical specifications

Line voltage 380 ... 480 V 3 AC		Active Line Modules			
		6SL3331-7TE35-6AA0	6SL3331-7TE36-4AA0	6SL3331-7TE37-5AA0	6SL3331-7TE38-4AA0
Rated power					
• At $I_{N\ DC}$ (50 Hz 400 V)	kW	**355**	**400**	**450**	**500**
• At $I_{L\ DC}$ (50 Hz 400 V)	kW	300	350	400	450
• At $I_{N\ DC}$ (60 Hz 460 V)	hp	500	550	650	700
• At $I_{L\ DC}$ (60 Hz 460 V)	hp	400	500	550	650
DC link current					
• Rated current $I_{N\ DC}$	A	630	710	835	940
• Base-load current $I_{L\ DC}$	A	571	649	760	954
• Maximum current $I_{max\ DC}$	A	857	974	1140	1281
Infeed/regenerative feedback current					
• Rated current $I_{N\ I}$	A	560	635	745	840
• Maximum current $I_{max\ I}$	A	773	878	1028	1155
Pulse frequency	kHz	4	4	4	4
Current demand					
• 24 V DC auxiliary power supply	A	1.3	1.3	1.3	1.3
• 400 V AC (fan current supply)	A	1.8	1.8	1.8	1.8
DC link capacitance					
• Active Line Module	µF	16450	16450	18800	18800
• Drive line-up, max.					
- At 400 V / 50 Hz [1]	µF	130000/400000/ not permissible	130000/400000/ not permissible	130000/400000/ not permissible	130000/400000/ not permissible
- At 480 V / 60 Hz [1]	µF	95000/250000/ not permissible	95000/250000/ not permissible	95000/250000/ not permissible	95000/250000/ not permissible
Power loss, max. [2]					
• At 50 Hz 400 V	kW	4.47	4.47	5.89	6.79
• At 60 Hz 460 V	kW	4.48	4.48	5.90	6.80
Cooling air requirement	m^3/s (ft^3/s)	0.64 (22.6)	0.64 (22.6)	0.64 (22.6)	0.64 (22.6)
Sound pressure level L_{pA} (1 m) at 50/60 Hz	dB	72.5	72.5	72.5	72.5
Line supply connection U1, V1, W1		4 x M12	4 x M12	4 x M12	4 x M12
• Conductor cross-section, max. (IEC)	mm^2	4 × 240	4 × 240	4 × 240	4 × 240
DC link connection DCP, DCN		2 x M12	2 x M12	2 x M12	2 x M12
• Conductor cross-section, max. (IEC)	mm^2	Busbar 70 x 4	Busbar 70 x 6	Busbar 70 x 4	Busbar 70 x 4
PE connection		4 x M12	4 x M12	4 x M12	4 x M12
• Conductor cross-section, max. (IEC)	mm^2	4 × 240	4 × 240	4 × 240	4 × 240
Cable length, max. [3] [4] [5]					
• Shielded	m (ft)	3900 (12795)	3900 (12795)	3900 (12795)	3900 (12795)
• Unshielded	m (ft)	5850 (19193)	5850 (19193)	5850 (19193)	5850 (19193)
Degree of protection		IP00	IP00	IP00	IP00
Dimensions					
• Width	mm (in)	280 (11.0)	280 (11.0)	280 (11.0)	280 (11.0)
• Height	mm (in)	1248 (49.1)	1248 (49.1)	1248 (49.1)	1248 (49.1)
• Depth	mm (in)	542 (21.3)	542 (21.3)	542 (21.3)	542 (21.3)
Weight, approx.	kg (lb)	119 (262)	119 (262)	122 (269)	122 (269)
Frame size		FS2	FS2	FS2+	FS2+
Minimum short-circuit current [6]	kA	18	18	14	16

1) The maximum DC link capacitances of the drive line-up depend on the number of pre-charging resistors (2.2 Ω) connected in parallel per phase: 1 pre-charging resistor/2 pre-charging resistors/3 pre-charging resistors.

2) The specified power loss represents the maximum value at 100 % utilization. The value is lower under normal operating conditions.

3) Total of all motor cables and DC link. Longer cable lengths for specific configurations are available on request.
For additional information, please refer to the SINAMICS Low Voltage Engineering Manual.

4) The cable lengths are valid for use in IT systems. When used in TN systems, the cable lengths are shortened to 30 % of the specified value.

5) When used in TN systems and during operation of the Active Line Module in chassis-2 format or the connected Motor Modules with increased pulse frequency, you can obtain the permitted cable lengths on request.

6) Minimum current required for reliably triggering the protective devices.

© Siemens 2024

Technical specifications

Line voltage 380 ... 480 V 3 AC		Active Line Modules				
		6SL3331-7TE38-8AA0	6SL3331-7TE41-0AA0	6SL3331-7TE41-2AA0	6SL3331-7TE41-3AA0	6SL3331-7TE41-4AA0
Rated power						
• At $I_{N\ DC}$ (50 Hz 400 V)	kW	**560**	**630**	**710**	**800**	**900**
• At $I_{L\ DC}$ (50 Hz 400 V)	kW	500	560	630	700	800
• At $I_{N\ DC}$ (60 Hz 460 V)	hp	800	900	1050	1150	1300
• At $I_{L\ DC}$ (60 Hz 460 V)	hp	700	800	900	1000	1150
DC link current						
• Rated current $I_{N\ DC}$	A	1010	1100	1245	1415	1575
• Base-load current $I_{L\ DC}$	A	915	1004	1131	1287	1432
• Maximum current $I_{max\ DC}$	A	1373	1506	1697	1931	2147
Infeed/regenerative feedback current						
• Rated current $I_{N\ I}$	A	900	985	1110	1260	1405
• Maximum current $I_{max\ I}$	A	1238	1358	1530	1740	1935
Pulse frequency	kHz	4	4	4	4	4
Current demand						
• 24 V DC auxiliary power supply	A	1.3	1.3	1.3	1.3	1.3
• 400 V AC (fan current supply)	A	1.8	1.8	1.8	1.8	1.8
DC link capacitance						
• Active Line Module	µF	25900	25900	25900	40800	40800
• Drive line-up, max.						
- At 400 V / 50 Hz [1]	µF	130000/400000/630000	130000/400000/630000	130000/400000/630000	130000/400000/630000	130000/400000/630000
- At 480 V / 60 Hz [1]	µF	95000/250000/450000	95000/250000/450000	95000/250000/450000	95000/250000/450000	95000/250000/450000
Power loss, max. [2]						
• At 50 Hz 400 V	kW	7.13	7.86	9.43	10.5	11.6
• At 60 Hz 460 V	kW	7.14	7.87	9.44	11.4	12.5
Cooling air requirement	m^3/s (ft^3/s)	0.64 (22.6)	0.64 (22.6)	0.64 (22.6)	0.64 (22.6)	0.64 (22.6)
Sound pressure level L_{pA} (1 m) at 50/60 Hz	dB	72.5	72.5	72.5	72.5	72.5
Line supply connection U1, V1, W1		6 x M12	6 x M12	6 x M12	6 x M12	6 x M12
• Conductor cross-section, max. (IEC)	mm^2	6 × 240	6 × 240	6 × 240	6 × 240	6 × 240
DC link connection DCP, DCN		4 × M12	4 × M12	4 × M12	4 × M12	4 × M12
• Conductor cross-section, max. (IEC)	mm^2	Busbar 80 x 8	Busbar 80 x 8	Busbar 80 x 8	Busbar 80 x 8	Busbar 80 x 8
PE connection		6 x M12	6 x M12	6 x M12	6 x M12	6 x M12
• Conductor cross-section, max. (IEC)	mm^2	6 x 240	6 x 240	6 x 240	6 x 240	6 x 240
Cable length, max. [3] [4] [5]						
• Shielded	m (ft)	3900 (12795)	3900 (12795)	3900 (12795)	3900 (12795)	3900 (12795)
• Unshielded	m (ft)	5850 (19193)	5850 (19193)	5850 (19193)	5850 (19193)	5850 (19193)
Degree of protection		IP00	IP00	IP00	IP00	IP00
Dimensions						
• Width	mm (in)	280 (11.0)	280 (11.0)	280 (11.0)	280 (11.0)	280 (11.0)
• Height	mm (in)	1491 (58.7)	1491 (58.7)	1491 (58.7)	1491 (58.7)	1491 (58.7)
• Depth	mm (in)	542 (21.3)	542 (21.3)	542 (21.3)	542 (21.3)	542 (21.3)
Weight, approx.	kg (lb)	162 (357)	162 (357)	162 (357)	173 (381)	173 (381)
Frame size		FS4	FS4	FS4	FS4+	FS4+
Minimum short-circuit current [6]	kA	18	20	30	30	30

[1] The maximum DC link capacitances of the drive line-up depend on the number of pre-charging resistors (2.2 Ω) connected in parallel per phase: 1 pre-charging resistor/2 pre-charging resistors/3 pre-charging resistors.

[2] The specified power loss represents the maximum value at 100 % utilization. The value is lower under normal operating conditions.

[3] Total of all motor cables and DC link. Longer cable lengths for specific configurations are available on request.
For additional information, please refer to the SINAMICS Low Voltage Engineering Manual.

[4] The cable lengths are valid for use in IT systems. When used in TN systems, the cable lengths are shortened to 30 % of the specified value.

[5] When used in TN systems and during operation of the Active Line Module in chassis-2 format or the connected Motor Modules with increased pulse frequency, you can obtain the permitted cable lengths on request.

[6] Minimum current required for reliably triggering the protective devices.

© Siemens 2024

More information

Use of the Active Line Modules in chassis-2 format in networks according to the standard IEC 61000-2-4 (2002), Class 2

When using the Active Line Modules in chassis-2 format in networks according to the standard IEC 61000-2-4 (2002), Class 2, the following conditions must be observed:

- Class 2 of IEC 61000-2-4 (2002) is complied with for the step-up factor set in the factory (= 1.5) and an R_{SC} > 20 and a pulse frequency of 4 kHz.
- With a step-up factor ≥ 1.5, the pulse frequency of the Active Line Module in chassis-2 format must be set to 8 kHz. When used in TN systems and during operation of the Active Line Module in chassis-2 format or the connected Motor Modules with increased pulse frequency, you can obtain the permitted cable lengths on request.

Use of the Active Line Modules in chassis-2 format in weak grids

When the Active Line Modules in chassis-2 format are used in weak grids (R_{SC} < 20), the band-stop filter must be activated (parameter p5200.0 = 1) to suppress increased line harmonic distortions.

When using Active Line Modules in chassis-2 format in strong grids (R_{SC} > 20), the band-stop filter should not be activated (parameter p5200.0 = 0) to avoid unfavorable overshoots.

© Siemens 2024

Overview

Active Interface Modules in chassis-2 format are used in combination with Active Line Modules in chassis-2 format. The Active Interface Modules in chassis-2 format contain a Clean Power Filter with basic interference suppression, line voltage detection, and monitoring sensors.

The pre-charging input circuit that is necessary for operation must be provided separately. The pre-charge contactor is activated from the Active Line Module in chassis-2 format.

Line harmonics are largely suppressed by the Clean Power Filter. Active Line Modules are designed for connection to grounded TN/TT and non-grounded IT systems.

Pre-charging input circuit

A separate pre-charging input circuit is essential for operating the Active Line Modules in chassis-2 format. The pre-charging input circuit components must be ordered separately.

The pre-charging input circuit ensures that there is a current-limited pre-charging of the DC link capacitors of the Active Line Module in chassis-2 format and the connected Motor Modules during the switch-on procedure. After pre-charging has been completed, the circuit breaker is closed and the pre-charging input circuit is bridged; the Active Interface Module in chassis-2 format is then directly connected to the supply system.

The pre-charging input circuit comprises a pre-charge contactor, pre-charging resistors, and a main contactor. The circuit must be protected against overcurrent using suitable protection measures. The pre-charging is monitored via feedback from the contactors to the Active Line Module in chassis-2 format.

To achieve or to increase the permissible DC link capacitance, the pre-charging resistors must or can be connected in parallel in each phase.

The specifications regarding connecting pre-charging resistors in parallel and the DC link capacitance can be found in the technical specifications of the Active Line Module in chassis-2 format.

Design

The Active Interface Modules in chassis-2 format feature the following interfaces as standard:

- 1 line supply connection
- 1 load connection
- 1 connection for the 24 V DC electronics power supply
- 1 connection for the external 230 V AC supply (fan power supply)
- 1 DRIVE-CLiQ socket (on VSM10 Voltage Sensing Module)
- 1 connection for pre-charging input circuit
- 1 PE/protective conductor connection

The scope of supply of the Active Interface Modules in chassis-2 format includes:

- DRIVE-CLiQ cable for the connection between Active Interface Module and Active Line Module
- DRIVE-CLiQ cable to connect the Control Unit to the first Motor Module
- 1 set of warning labels in 30 languages (BG, CN, CZ, DE, DK, EE, ES, FI, FR, GB, GR, HU, IE, IS, IT, JP, KR, LT, LV, MT, NL, NO, PL, PT, RO, RU, SE, SI, SK, TR)

© Siemens 2024

Integration

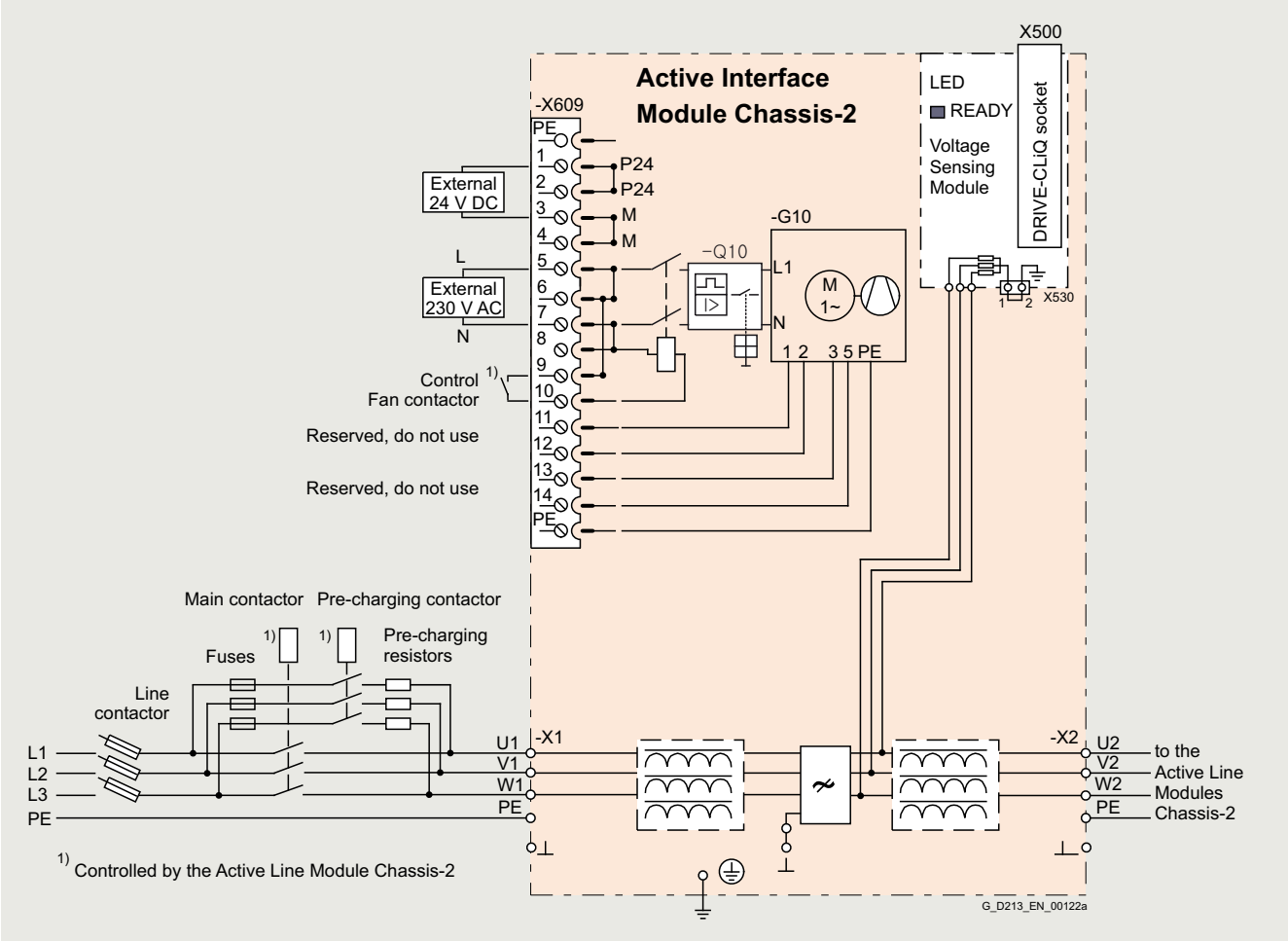

Connection example for Active Interface Module in chassis-2 format

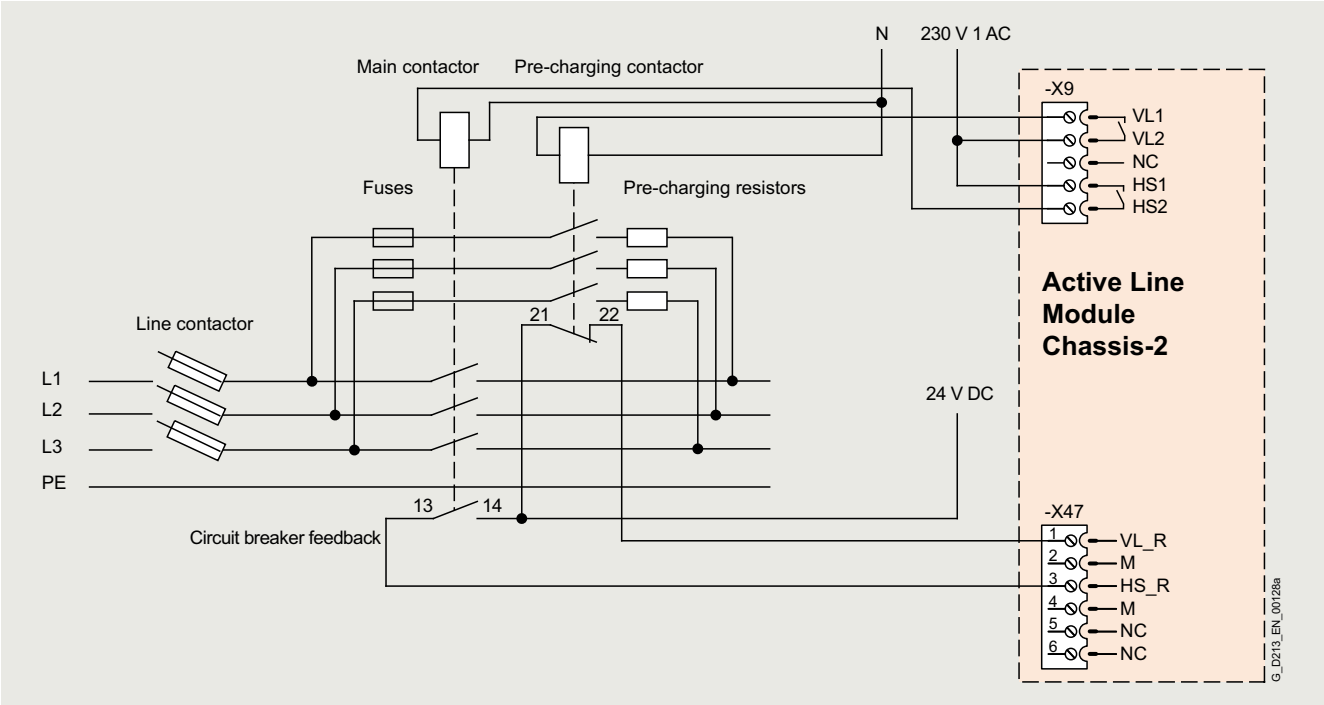

Pre-charging input circuit for Active Line Module in chassis-2 format

© Siemens 2024

Technical specifications

Line voltage 380 ... 480 V 3 AC		Active Interface Module		
		6SL3301-7TE36-4AA0	6SL3301-7TE41-0AA0	6SL3301-7TE41-4AA0
Suitable for Active Line Module • Rated power at 400 V - Air-cooled	kW	**355/400** 6SL3331-7TE35-6AA0/ 6SL3331-7TE36-4AA0	**450/500/560/630** 6SL3331-7TE37-5AA0/ 6SL3331-7TE38-4AA0/ 6SL3331-7TE38-8AA0/ 6SL3331-7TE41-0AA0	**710/800/900** 6SL3331-7TE41-2AA0/ 6SL3331-7TE41-3AA0/ 6SL3331-7TE41-4AA0
Rated current	A	560/635	745/840/900/985	710/800/900
Max. pre-charging current (max. 3 s)				
• One resistor/phase	A	91	91	91
• Two resistors/phase	A	182	182	182
• Three resistors/phase	A	274	274	274
Current demand				
• 24 V DC auxiliary power supply	A	0.2	0.2	0.2
• 230 V 2 AC				
- Inrush current	A	0.2	0.2	0.2
- Holding current	A	3.1	3.1	3.1
Power loss, max. [1]				
• At 50 Hz 400 V	kW	6.9	9.9	14.5
• At 60 Hz 460 V	kW	6.9	9.9	14.5
Cooling air requirement	m^3/s (ft^3/s)	0.61 (21.5)	0.61 (21.5)	0.61 (21.5)
Sound pressure level L_{pA} (1 m) at 50/60 Hz	dB	73.5	73.5	73.5
Line/load connection L1, L2, L3 / U2, V2, W2		Busbar 2 x M12	Busbar 2 x M12	Busbar 2 x M12
• Conductor cross-section, max. (IEC)	mm^2	Busbar 60 x 8	Busbar 80 x 8	Busbar 80 x 8
PE/GND connection		M10 screw	M10 screw	M10 screw
• Conductor cross-section, max. (IEC)	mm^2	4 × 240	4 × 240	4 × 240
Degree of protection		IP00	IP00	IP00
Dimensions				
• Width	mm (in)	501 (19.7)	501 (19.7)	501 (19.7)
• Height	mm (in)	1676.5 (66.0)	1676.5 (66.0)	1676.5 (66.0)
• Depth	mm (in)	533 (21.0)	533 (21.0)	533 (21.0)
Weight, approx.	kg (lb)	358 (789)	456 (1005)	548 (1208)
Frame size		FS2	FS4	FS4+
Minimum short-circuit current [2]	kA	18/18	18/18/18/20	30/30/30

[1] The specified power loss represents the maximum value at 100 % utilization. The value is lower under normal operating conditions.

[2] Current required for reliably triggering protective devices.

© Siemens 2024

Overview

A Motor Module comprises a self-commutated inverter with IGBTs. It generates a variable voltage with variable frequency from the DC link voltage that feeds the connected motor.

Multiple Motor Modules can be operated on a single DC link. This permits energy to be transferred between the Motor Modules. This means that if one Motor Module operating in generator mode produces energy, the energy can be used by another Motor Module operating in motor mode.

Motor Modules are controlled by a Control Unit that is not included in the scope of supply.

DRIVE-CLiQ cables are required to operate a Motor Module.

Design

The Motor Modules in chassis-2 format have the following interfaces as standard:

- 1 motor connection
- 1 connection for the 24 V DC electronics power supply
- 1 DC link connection (DCP, DCN) for connecting to the supply DC link
- 3 DRIVE-CLiQ sockets
- 1 temperature sensor input for KTY84-130, Pt1000, PTC or Pt100
- 1 connection for Safe Brake Adapter
- 1 connection for Safety Integrated
- 2 PE/protective conductor connections

The status of the Motor Modules is indicated via three LEDs.

The scope of supply of the Motor Modules includes:

- PE connection bars
- Mounting brackets for mechanical fastening of the chassis
- Screws for the motor cable connection and PE connection bars
- Connector set for customer connection (control cables)
- Shield connection kit (control cables)
- 1 set of warning labels in 30 languages (BG, CN, CZ, DE, DK, EE, ES, FI, FR, GB, GR, HU, IE, IS, IT, JP, KR, LT, LV, MT, NL, NO, PL, PT, RO, RU, SE, SI, SK, TR)

Parallel connection for power increase

The power rating can be increased by connecting Motor Modules in chassis-2 format in parallel. You must observe the following rules:

- Up to six identical Motor Modules can be connected in parallel.
- A common Control Unit is required whenever the modules are connected in parallel. For more than 4 power units, these must be distributed as symmetrically as possible between at least two DRIVE-CLiQ ports (e.g. 3 x 2 Motor Modules in series or at least 2 x 3 Motor Modules in series).
- The motor supply cables must have the same length (symmetrical design).
- Power must be supplied to the Motor Modules from a common DC link.
- A derating factor of 5 % must be taken into consideration, regardless of the number of modules connected in parallel.
- For motors with multi-winding systems, please observe the notes in the Low Voltage Engineering Manual.
- For motors with a single-winding system, the length of the supply lines must be kept to a minimum or motor reactors must be used. The respective cable lengths are listed in the table below.

Motor Module in chassis-2 format	**P_N**	**I_{Neff}**	**Minimum cable length**
6SL3321-...	kW	A	m
1TE36-6AA0	315	655	13
1TE37-4AA0	355	740	12
1TE38-1AA0	400	810	10
1TE38-8AA0	450	910	9
1TE41-0AA0	500	975	8
1TE41-1AA0	560	1075	8
1TE41-2AA0	630	1200	8
1TE41-3AA0	710	1325	8
1TE41-5AA0	800	1495	8

Note:

No mixed operation possible!
It is only possible to connect identical power units in parallel if all power units have the same hardware version. Mixed operation between Motor Modules in chassis format (Article No. 6SL3320-xxxxx–xAA3) and Motor Modules in chassis-2 format (Article No. 6SL3321-xxxxx–xAA0) is not possible.

Selection and ordering data

Type rating at 400 V	Rated output current	**Motor Module**
kW	A	Article No.
Line voltage 380 ... 480 V 3 AC (DC link voltage 510 ... 720 V DC)		
315	655	**6SL3321-1TE36-6AA0**
355	740	**6SL3321-1TE37-4AA0**
400	810	**6SL3321-1TE38-1AA0**
450	910	**6SL3321-1TE38-8AA0**
500	975	**6SL3321-1TE41-0AA0**
560	1075	**6SL3321-1TE41-1AA0**
630	1200	**6SL3321-1TE41-2AA0**
710	1325	**6SL3321-1TE41-3AA0**
800	1495	**6SL3321-1TE41-5AA0**

Description	Article No.
Accessories for re-ordering	
Dust protection blanking plugs (50 units) For DRIVE-CLiQ port	**6SL3066-4CA00-0AA0**

For motor-side components, see System components.

© Siemens 2024

Integration

The Motor Modules communicate with the higher-level control module via DRIVE-CLiQ.
This control module can be:

- A CU320-2 Control Unit
- A SIMOTION D Control Unit

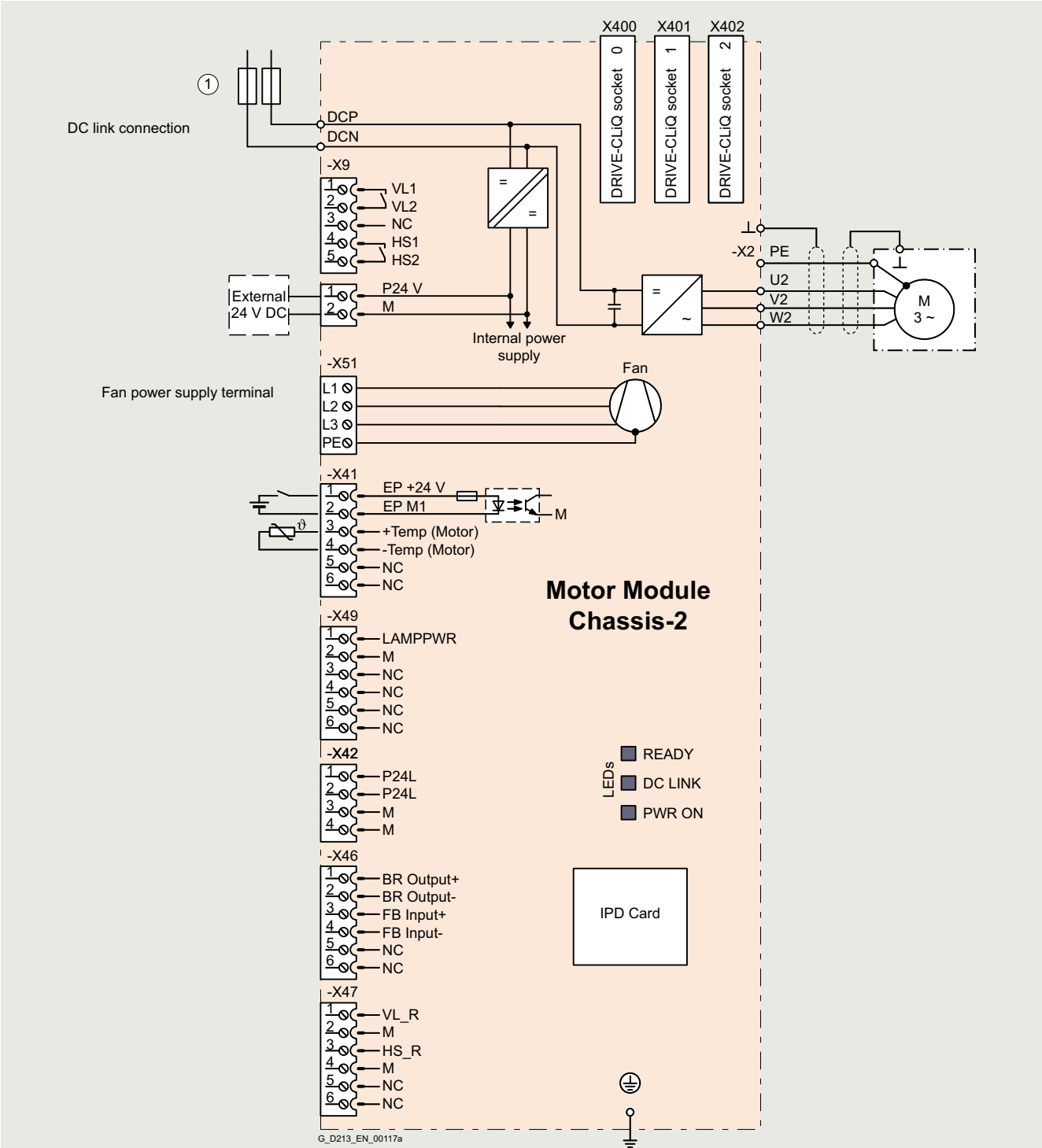

1 The DC link fuses must be provided on the plant/system side.

Connection example for Motor Module in chassis-2 format

© Siemens 2024

Technical specifications

General technical specifications

Electrical specifications	
Efficiency	> 98.5 %
DC link voltage (up to 2000 m (6562 ft) above sea level)	510 ... 720 V DC (line connection voltage 380 ... 480 V 3 AC)
Output frequency [1)]	
• Control mode Servo	0 ... 550 Hz
• Control mode Vector	0 ... 550 Hz
• Control mode V/f	0 ... 550 Hz
Safety Integrated	Safety Integrity Level 2 (SIL2) acc. to IEC 61508, Performance Level d (PLd) acc. to EN ISO 13849-1 and Control Category 3 acc. to EN ISO 13849-1

[1)] Please note:
- The correlation between the maximum output frequency, pulse frequency and current derating. Higher output frequencies on request. For more information, see
https://support.industry.siemens.com/cs/document/104020669
- The correlation between the minimum output frequency and permissible output current (current derating).
For additional information, please refer to the SINAMICS Low Voltage Engineering Manual.

© Siemens 2024

Technical specifications

Line voltage 380 ... 480 V 3 AC DC link voltage 510 … 720 V DC		Motor Modules 6SL3321-1TE36-6AA0	6SL3321-1TE37-4AA0	6SL3321-1TE38-1AA0	6SL3321-1TE38-8AA0
Type rating					
• At I_L (50 Hz 400 V) [1]	kW	**315**	**355**	**400**	**450**
• At I_H (50 Hz 400 V) [1]	kW	280	315	355	400
• At I_L (60 Hz 460 V) [2]	hp	500	600	650	700
• At I_H (60 Hz 460 V) [2]	hp	450	500	550	650
Output current					
• Rated current $I_{N\,O}$	A	655	740	810	910
• Base-load current I_L [3]	A	620	700	770	865
• Base-load current I_H [4]	A	555	620	675	760
• Maximum current $I_{max\,O}$	A	917	1036	1134	1274
DC link current					
• Rated current $I_{N\,DC}$	A	785	890	975	1090
Current demand					
• 24 V DC auxiliary power supply	A	1.3	1.3	1.3	1.3
• 400 V AC	A	1.8	1.8	1.8	1.8
DC link capacitance	µF	16450	16450	18800	18800
Pulse frequency [5]					
• Rated frequency	kHz	2.5	2.5	2.5	2.5
• Pulse frequency, max.					
- Without derating	kHz	2.5	2.5	2.5	2.5
- With derating	kHz	8	8	8	8
Power loss, max. [6]					
• At 50 Hz 400 V	kW	6.4	6.7	7.4	8.4
• At 60 Hz 460 V	kW	6.6	7.0	7.7	8.7
Cooling air requirement	m^3/s (ft^3/s)	0.64 (22.6)	0.64 (22.6)	0.64 (22.6)	0.64 (22.6)
Sound pressure level L_{pA} (1 m) at 50/60 Hz	dB	72.5	72.5	72.5	72.5
DC link connection DCP, DCN		2 × hole for M12	2 × hole for M12	2 × hole for M12	2 × hole for M12
• Conductor cross-sections, max. (IEC)	mm^2	Busbar	Busbar	Busbar	Busbar
Motor connection U2, V2, W2		4 × M12 screw	4 × M12 screw	4 × M12 screw	4 × M12 screw
• Conductor cross-sections, max. (IEC)	mm^2	4 × 240	4 × 240	4 × 240	4 × 240
Cable length, max. [7]					
• Shielded	m (ft)	300 (984)	300 (984)	100 (328) [8]	100 (328) [8]
• Unshielded	m (ft)	450 (1476)	450 (1476)	100 (328) [8]	100 (328) [8]
PE/GND connection		4 × M12 screw	4 × M12 screw	4 × M12 screw	4 × M12 screw
• Conductor cross-sections, max. (IEC)	mm^2	4 × 240	4 × 240	4 × 240	4 × 240
Degree of protection		IP00	IP00	IP00	IP00
Dimensions					
• Width	mm (in)	280 (11.0)	280 (11.0)	280 (11.0)	280 (11.0)
• Height	mm (in)	1248 (49.1)	1248 (49.1)	1248 (49.1)	1248 (49.1)
• Depth	mm (in)	542 (21.3)	542 (21.3)	542 (21.3)	542 (21.3)
Weight, approx.	kg (lb)	119 (262)	119 (262)	122 (269)	122 (269)
Frame size		FS2	FS2	FS2+	FS2+

1) Rated power of a typical 6-pole standard asynchronous motor based on I_L or I_H for 400 V 3 AC 50 Hz.

2) Rated power of a typical 6-pole standard asynchronous motor based on I_L or I_H for 460 V 3 AC 60 Hz.

3) The base-load current for a low overload I_L is based on a duty cycle of 110 % for 60 s.

4) The base-load current I_H for a high overload is based on a duty cycle of 150 % for 60 s. The value is valid for a pulse frequency of 2 kHz. It is also valid for a pulse frequency of 2.5 kHz if p0290 is set = 12.

5) Information regarding the correlation between the pulse frequency and maximum output current/output frequency is provided in the SINAMICS Low Voltage Engineering Manual.

6) The specified power loss represents the maximum value at 100 % utilization. The value is lower under normal operating conditions.

7) When used in the TN system and with infeed via Active Line Module and when operating the Motor Modules in chassis-2 format with an increased pulse frequency, you will obtain the permitted motor cable lengths upon request.

8) Longer cables are available on request.

© Siemens 2024

Technical specifications

Line voltage 380 ... 480 V 3 AC DC link voltage 510 … 720 V DC		Motor Modules				
		6SL3321-1TE41-0AA0	6SL3321-1TE41-1AA0	6SL3321-1TE41-2AA0	6SL3321-1TE41-3AA0	6SL3321-1TE41-5AA0
Type rating						
• At I_L (50 Hz 400 V) [1]	kW	**500**	**560**	**630**	**710**	**800**
• At I_H (50 Hz 400 V) [1]	kW	450	500	560	630	710
• At I_L (60 Hz 460 V) [2]	hp	750	850	950	1050	1200
• At I_H (60 Hz 460 V) [2]	hp	650	750	850	900	1050
Output current						
• Rated current $I_{N\,O}$	A	975	1075	1200	1325	1495
• Base-load current I_L [3]	A	910	1000	1145	1260	1420
• Base-load current I_H [4]	A	800	890	1000	1100	1240
• Maximum current $I_{max\,O}$	A	1365	1505	1680	1855	2093
DC link current						
• Rated current $I_{N\,DC}$	A	1170	1290	1440	1590	1795
Current demand						
• 24 V DC auxiliary power supply	A	1.3	1.3	1.3	1.3	1.3
• 400 V AC	A	1.8	1.8	1.8	1.8	1.8
DC link capacitance	µF	25900	25900	25900	40800	40800
Pulse frequency [5]						
• Rated frequency	kHz	2.5	2.5	2.5	2.5	2.5
• Pulse frequency, max.						
- Without derating	kHz	2.5	2.5	2.5	2.5	2.5
- With derating	kHz	8	8	8	8	8
Power loss, max. [6]						
• At 50 Hz 400 V	kW	8.7	9.5	10.4	12.1	13.7
• At 60 Hz 460 V	kW	9.0	9.8	10.8	13.2	14.8
Cooling air requirement	m^3/s (ft^3/s)	0.64 (22.6)	0.64 (22.6)	0.64 (22.6)	0.64 (22.6)	0.64 (22.6)
Sound pressure level L_{pA} (1 m) at 50/60 Hz	dB	72.5	72.5	72.5	72.5	72.5
DC link connection DCP, DCN		4 × hole for M12	4 × hole for M12	4 × hole for M12	4 × hole for M12	4 × hole for M12
• Conductor cross-sections, max. (IEC)	mm^2	Busbar	Busbar	Busbar	Busbar	Busbar
Motor connection U2, V2, W2		6 × M12 screw	6 × M12 screw	6 × M12 screw	6 × M12 screw	6 × M12 screw
• Conductor cross-sections, max. (IEC)	mm^2	6 × 240	6 × 240	6 × 240	6 × 240	6 × 240
Cable length, max. [7]						
• Shielded	m (ft)	300 (984)	300 (984)	300 (984)	100 (328) [8]	100 (328) [8]
• Unshielded	m (ft)	450 (1476)	450 (1476)	450 (1476)	100 (328) [8]	100 (328) [8]
PE/GND connection		6 × M12 screw	6 × M12 screw	6 × M12 screw	6 × M12 screw	6 × M12 screw
• Conductor cross-sections, max. (IEC)	mm^2	6 × 240	6 × 240	6 × 240	6 × 240	6 × 240
Degree of protection		IP00	IP00	IP00	IP00	IP00
Dimensions						
• Width	mm (in)	280 (11.0)	280 (11.0)	280 (11.0)	280 (11.0)	280 (11.0)
• Height	mm (in)	1491 (58.7)	1491 (58.7)	1491 (58.7)	1491 (58.7)	1491 (58.7)
• Depth	mm (in)	542 (21.3)	542 (21.3)	542 (21.3)	542 (21.3)	542 (21.3)
Weight, approx.	kg (lb)	162 (357)	162 (357)	162 (357)	173 (381)	173 (381)
Frame size		FS4	FS4	FS4	FS4+	FS4+

[1] Rated power of a typical 6-pole standard asynchronous motor based on I_L or I_H for 400 V 3 AC 50 Hz.

[2] Rated power of a typical 6-pole standard asynchronous motor based on I_L or I_H for 460 V 3 AC 60 Hz.

[3] The base-load current for a low overload I_L is based on a duty cycle of 110 % for 60 s.

[4] The base-load current I_H for a high overload is based on a duty cycle of 150 % for 60 s. The value is valid for a pulse frequency of 2 kHz. It is also valid for a pulse frequency of 2.5 kHz if p0290 is set = 12.

[5] Information regarding the correlation between the pulse frequency and maximum output current/output frequency is provided in the SINAMICS Low Voltage Engineering Manual.

[6] The specified power loss represents the maximum value at 100 % utilization. The value is lower under normal operating conditions.

[7] When used in the TN system and with infeed via Active Line Module and when operating the Motor Modules in chassis-2 format with an increased pulse frequency, you will obtain the permitted motor cable lengths upon request.

[8] Longer cables are available on request.

© Siemens 2024

Overview

OEM kits are suitable for easy installation of SINAMICS S120 chassis-2 format built-in units in Rittal VX25 control cabinets (cabinet height 2000 mm, cabinet depth 600 mm). They also serve to establish an electrical connection between the built-in units and to increase the degree of protection of the control cabinets.

OEM kits are divided into the following main groups:

- Mechanical installation of the power units, including air routing to avoid air short-circuits inside the control cabinets
- Electrical power connection of the power units to the DC link, of the individual control cabinets to each other, and connection of the power cables and motor cables
- Increase the degree of protection of the control cabinets
- Installation ramp

Using OEM kits assists the control cabinet builder in creating a complete, finished and ready-to-connect drive system with SINAMICS S120 chassis-2 and Rittal VX25.

More information about the OEM kits can be found via the following link in SIOS. The article numbers of the Rittal VX25 control cabinets for SINAMICS S120 chassis-2 are also listed there.
https://support.industry.siemens.com/cs/de/en/view/109799904

© Siemens 2024

Overview

The mechanical installation kits make it possible to install chassis-2 format power units (Active Line Module / Active Interface Module / Motor Module) in a control cabinet.

They include a base plate for mounting the unit at the bottom of the control cabinet, a mounting plate for the rear panel, an exhaust air duct for removing heat from the control cabinet, as well as the mounting accessories required.

Mechanical installation kits for Motor Modules also include a PE plate for mounting and earthing shielded motor cables.

The following mechanical installation kits are available:

Power unit in chassis-2 format	Cabinet width in mm	Article No. OEM kit
Active Line Module frame sizes FS2/FS2+	400	6SL3760-4AV22-0CA0
Active Line Module frame sizes FS4/FS4+	600	6SL3760-6AV42-0CA0
Motor Module frame sizes FS2/FS2+	600	6SL3760-6AV22-0CA0
Motor Module frame sizes FS4/FS4+	600	6SL3760-6AV42-0CA0
Active Interface Module with line supply via busbars	600	6SL3760-6AV22-0AA0
Active Interface Module with line supply via cable [1]	800	6SL3760-8AV22-0AA0

The cutouts in the top plate required to connect the exhaust air duct can be made by the customer. Ready-prepared cabinets can also be obtained from Rittal.

Selection and ordering data

Designation of OEM kit	Article No.
Mechanical installation kit for Active Line Modules FS2/FS2+, cabinet width of 400 mm	**6SL3760-4AV22-0CA0**
Mechanical installation kit for Motor Modules FS2/FS2+, cabinet width of 600 mm	**6SL3760-6AV22-0CA0**
Mechanical installation kit for Motor Modules and Active Line Modules FS4/FS4+, cabinet width of 600 mm	**6SL3760-6AV42-0CA0**
Mechanical installation kit for Active Interface Modules FS2-FS4+, cabinet width of 600 mm	**6SL3760-6AV22-0AA0**
Mechanical installation kit for Active Interface Modules FS2-FS4+ for line connection kit, cabinet width of 800 mm	**6SL3760-8AV22-0AA0**

Integration

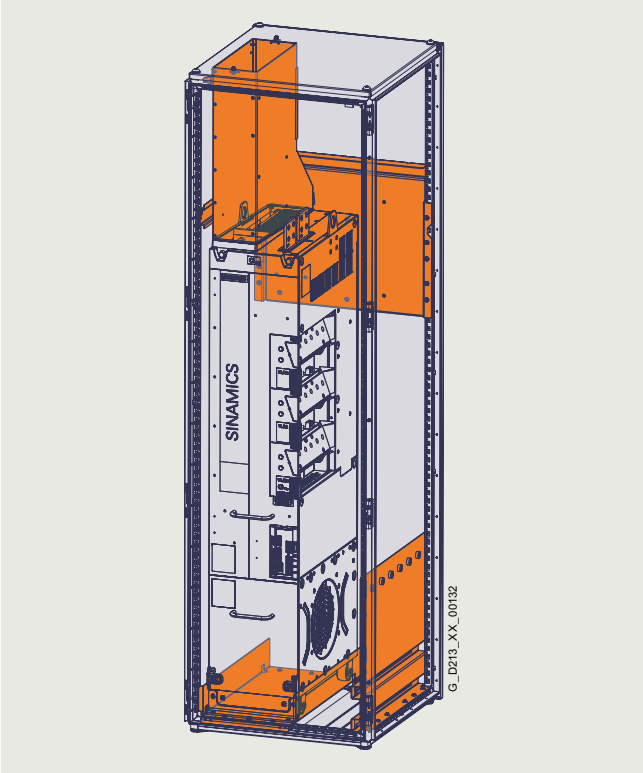

Mechanical installation kit for Active Line Modules and Motor Modules in chassis-2 format

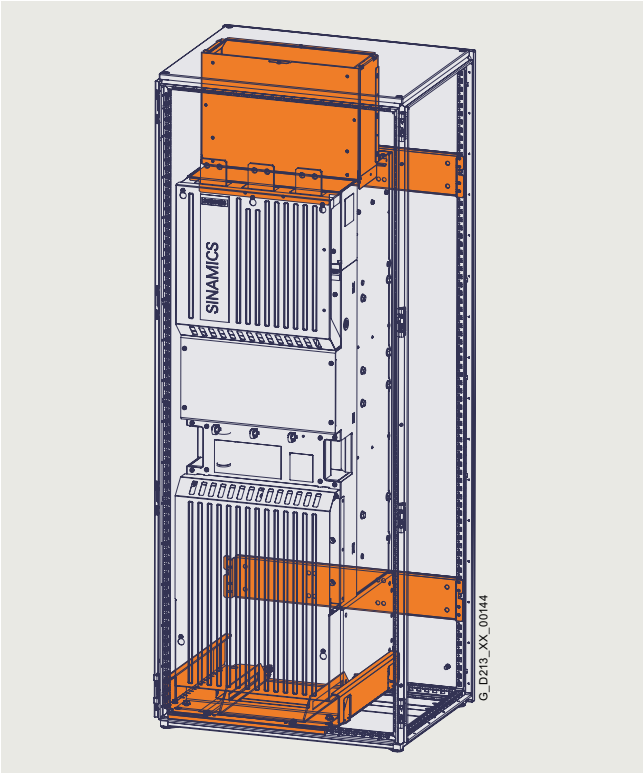

Mechanical installation kit for Active Interface Modules in chassis-2 format

[1] The line connection kit for Active Interface Modules (6SL3760-6BV00-0EC0) is also recommended.

© Siemens 2024

Overview

DC busbar basic kits are used to set up a cross-cabinet DC power supply in the upper area of the control cabinet.

DC busbar basic kits are available for various current ratings and cabinet widths. The kits build on each other and must be ordered separately.

- DC busbar basic kit for a current rating of 1840 A
  - It includes, among other things, a mounting plate, a busbar bracket and one DC busbar each for DCP and DCN.
- DC busbar basic kit for increasing to a current rating of 3320 A
  - It contains, among other things, a second DC busbar each for DCP and DCN.
  - The DC busbar basic kit, 1840 A must be ordered separately.
- DC busbar basic kit for increasing to a current rating of 4480 A
  - It contains, among other things, a third DC busbar each for DCP and DCN.
  - The DC busbar basic kits, 1840 A and 3320 A must be ordered separately.

Each DC busbar basic kit also includes two connecting bridges for connecting the DC busbars from two control cabinets as well as the necessary mounting accessories.

The following DC busbar basic kits are available:

Cabinet width in mm	Current rating in A	Article No. OEM kit
400	1840	6SL3760-4BV00-1DB0
400	3320	6SL3760-4BV00-3DB0
400	4480	6SL3760-4BV00-7DB0
600	1840	6SL3760-6BV00-1DB0
600	3320	6SL3760-6BV00-3DB0
600	4480	6SL3760-6BV00-7DB0
800	1840	6SL3760-8BV00-1DB0
800	3320	6SL3760-8BV00-3DB0
800	4480	6SL3760-8BV00-7DB0

Selection and ordering data

Designation of OEM kit	Article No.
DC busbar basic kit - 1840 A for cabinet width of 400 mm	**6SL3760-4BV00-1DB0**
DC busbar basic kit - 3320 A for cabinet width of 400 mm	**6SL3760-4BV00-3DB0**
DC busbar basic kit - 4480 A for cabinet width of 400 mm	**6SL3760-4BV00-7DB0**
DC busbar basic kit - 1840 A for cabinet width of 600 mm	**6SL3760-6BV00-1DB0**
DC busbar basic kit - 3320 A for cabinet width of 600 mm	**6SL3760-6BV00-3DB0**
DC busbar basic kit - 4480 A for cabinet width of 600 mm	**6SL3760-6BV00-7DB0**
DC busbar basic kit - 1840 A for cabinet width of 800 mm	**6SL3760-8BV00-1DB0**
DC busbar basic kit - 3320 A for cabinet width of 800 mm	**6SL3760-8BV00-3DB0**
DC busbar basic kit - 4480 A for cabinet width of 800 mm	**6SL3760-8BV00-7DB0**

Integration

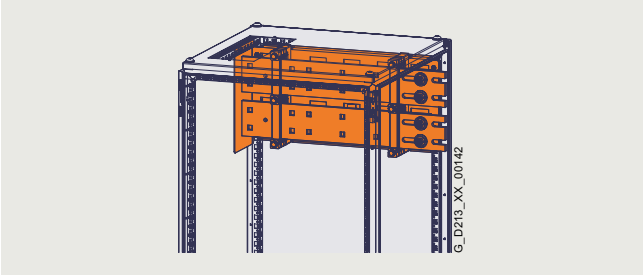

DC busbar basic kit for current rating of 1840 A

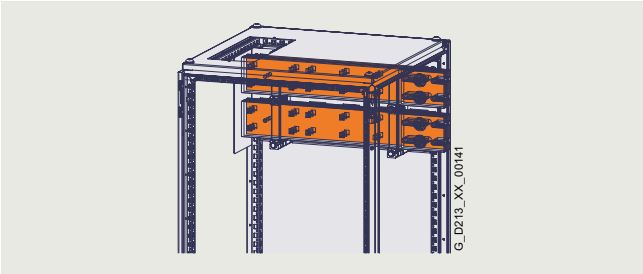

DC busbar basic kit for current rating of 4480 A

© Siemens 2024

Overview

DC busbar fuse kits are used to connect between a DC power supply in the upper part of the control cabinet and an Active Line Module or Motor Module. The busbar set includes a mounting space for installing the DC fuses provided as well as the necessary mounting accessories.

The DC fuses required for fuse protection are not included in the scope of delivery.

The following DC busbar fuse kits are available:

Power unit in chassis-2 format	Article No. OEM kit
Active Line Module/Motor Module frame sizes FS2/FS2+	6SL3760-6BV20-0DF0
Active Line Module/Motor Module frame sizes FS4/FS4+	6SL3760-6BV40-0DF0

Prerequisite for DC busbar fuse kit:

- Mechanical installation kit for Active Line Module or Motor Module
- DC busbar kit (depending on current rating and cabinet width)

Selection and ordering data

Designation of OEM kit	Article No.
DC busbar fuse kit FS2/FS2+	**6SL3760-6BV20-0DF0**
DC busbar fuse kit FS4/FS4+	**6SL3760-6BV40-0DF0**

Integration

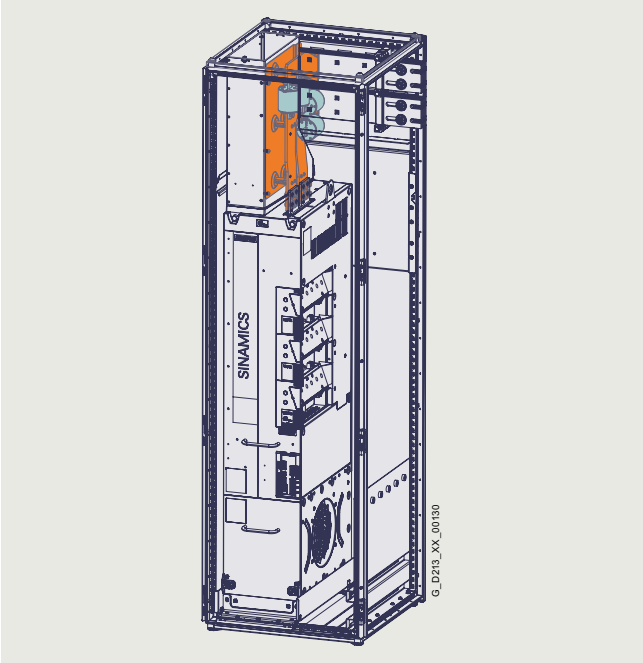

DC busbar fuse kit with DC fuses

© Siemens 2024

Overview

The PE busbar kits are used to set up a cross-cabinet PE busbar. They are available for different cabinet widths.

The PE busbar kits contain a PE busbar, a PE busbar connector and the necessary mounting accessories.

The following PE busbar kits are available:

Cabinet width in mm	Article No. OEM kit
400	6SL3760-4BV00-0DB0
600	6SL3760-6BV00-0DB0
800	6SL3760-8BV00-0DB0

Selection and ordering data

Designation of OEM kit	Article No.
PE busbar kit for a cabinet width of 400 mm	**6SL3760-4BV00-0DB0**
PE busbar kit for a cabinet width of 600 mm	**6SL3760-6BV00-0DB0**
PE busbar kit for a cabinet width of 800 mm	**6SL3760-8BV00-0DB0**

Integration

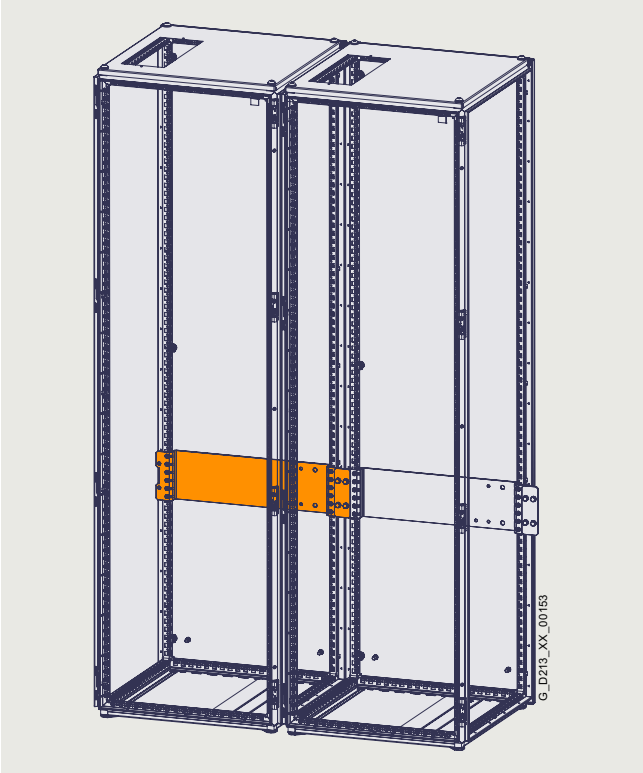

PE busbar kit - example for a cabinet width of 600 mm

© Siemens 2024

Overview

The busbar connection kits make it possible to connect an Active Interface Module and an Active Line Module in chassis-2 format in the control cabinet using prefabricated busbar sets.

The busbar connection kits include a busbar set arranged centrally and a set of connecting bars to the Active Interface Module and to the Active Line Module as well as mounting accessories required. Busbar connection kits are available for various arrangements of Active Line Modules and Active Interface Modules.

The following busbar connection kits are available:

Arrangement	Frame size for Active Line Module in chassis-2 format	Article No. OEM kit
Active Interface Module to the right of the Active Line Module	FS2/FS2+	6SL3760-6BV22-0AE0
Active Interface Module to the left of the Active Line Module	FS2/FS2+	6SL3760-6BV22-0EA0
Active Interface Module to the right of the Active Line Module	FS4/FS4+	6SL3760-6BV42-0AE0
Active Interface Module to the left of the Active Line Module	FS4/FS4+	6SL3760-6BV42-0EA0

Prerequisites for installing a busbar connection kit:

- Mechanical installation kit for Active Line Module
- Mechanical installation kit for Active Interface Module

Selection and ordering data

Designation of OEM kit	Article No.
Busbar connection kit for Active Line Modules FS2/FS2+, AIM to the right, cabinet width of 600 mm	**6SL3760-6BV22-0AE0**
Busbar connection kit for Active Line Modules FS2/FS2+, AIM to the left, cabinet width of 600 mm	**6SL3760-6BV22-0EA0**
Busbar connection kit for Active Line Modules FS4/FS4+, AIM to the right, cabinet width of 600 mm	**6SL3760-6BV42-0AE0**
Busbar connection kit for Active Line Modules FS4/FS4+, AIM to the left, cabinet width of 600 mm	**6SL3760-6BV42-0EA0**

Integration

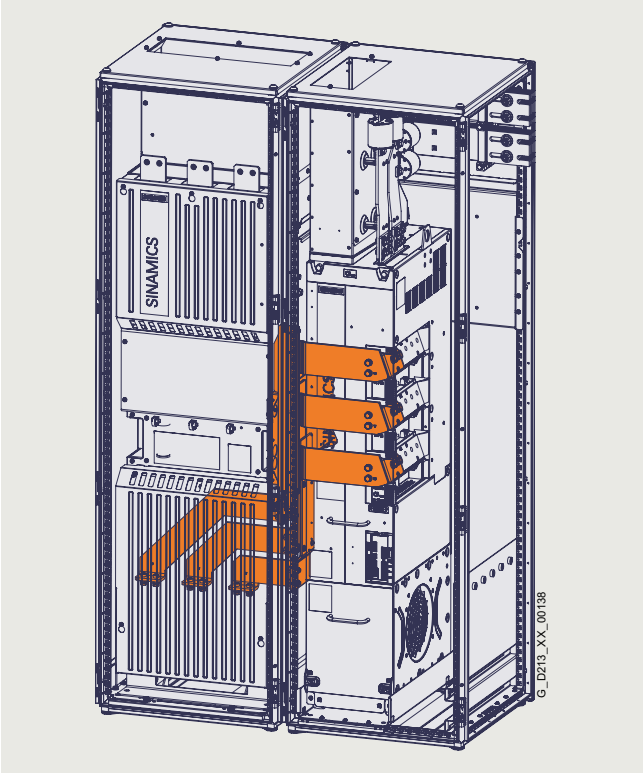

Busbar connection kit for arranging Active Interface Module to the left of the Active Line Module

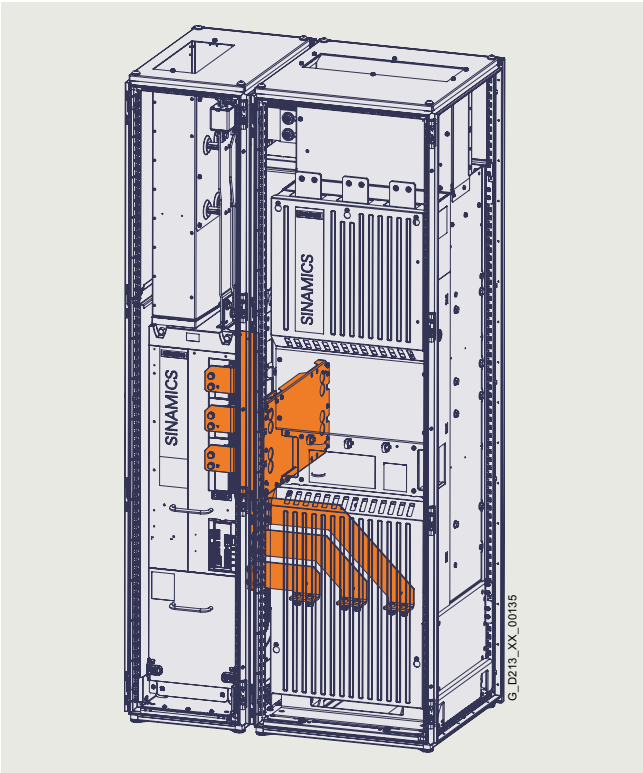

Busbar connection kit for arranging Active Interface Module to the right of the Active Line Module

© Siemens 2024

Overview

The line connection on the Active Interface Module is designed for busbars as standard. The line connection kits for Active Interface Modules make it possible to connect an Active Interface Module using power cables. The power cables can be fed either vertically from below through the control cabinet or from an adjacent cabinet and to the Active Interface Module from the right or left side.

The line connection kits for Active Interface Modules include a set of connection bars, fastening plates, a PE plate for mounting and earthing shielded power cables, as well as the necessary mounting accessories.

Note:

When using power cables to connect the Active Interface Module, it is recommended to install it in a control cabinet with a width of 800 mm.

The following line connection kit for Active Interface Modules is available:

Power unit in chassis-2 format	Article No. OEM kit
Active Interface Module	6SL3760-6BV00-0EC0

Prerequisite for line connection kit for Active Interface Modules:

- Mechanical installation kit for Active Interface Module

Selection and ordering data

Designation of OEM kit	Article No.
Line connection kit for Active Interface Modules	**6SL3760-6BV00-0EC0**

Integration

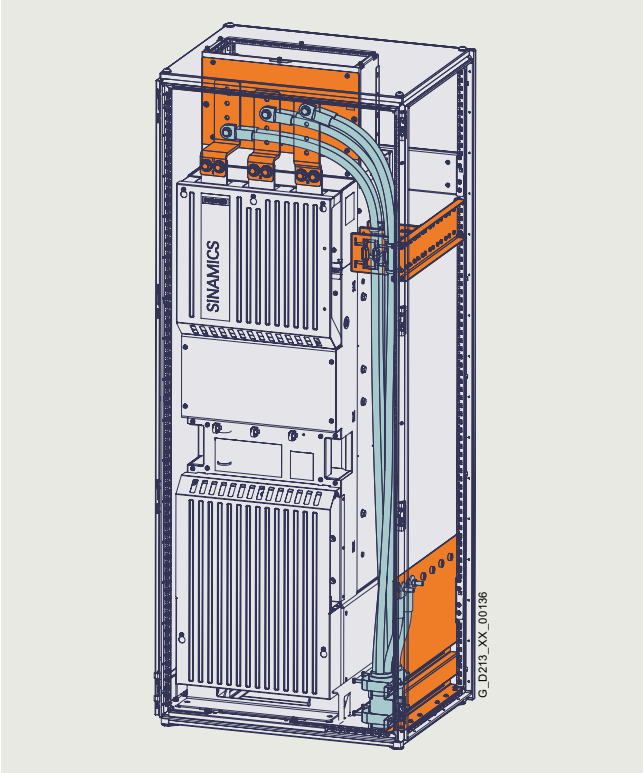

Line connection kit for Active Interface Modules

© Siemens 2024

Overview

The Motor Modules are designed for connecting the motor cables directly. The motor connection kits make it possible to easily connect the motor cables to a separate connection panel. This makes it simple to remove the Motor Module, facilitating rapid maintenance.

The motor connection kits include a connection panel for supporting the motor cables, a set of connecting bars to the Motor Module as well as the necessary mounting accessories.

The following motor connection kits are available:

Power unit in chassis-2 format	Article No. OEM kit
Motor Module frame sizes FS2/FS2+	6SL3760-6BV20-0MC0
Motor Module frame sizes FS4/FS4+	6SL3760-6BV40-0MC0

Prerequisite for motor connection kit:

- Mechanical installation kit for Motor Module

Selection and ordering data

Designation of OEM kit	Article No.
Motor connection kit for Motor Module FS2/FS2+	**6SL3760-6BV20-0MC0**
Motor connection kit for Motor Module FS4/FS4+	**6SL3760-6BV40-0MC0**

Integration

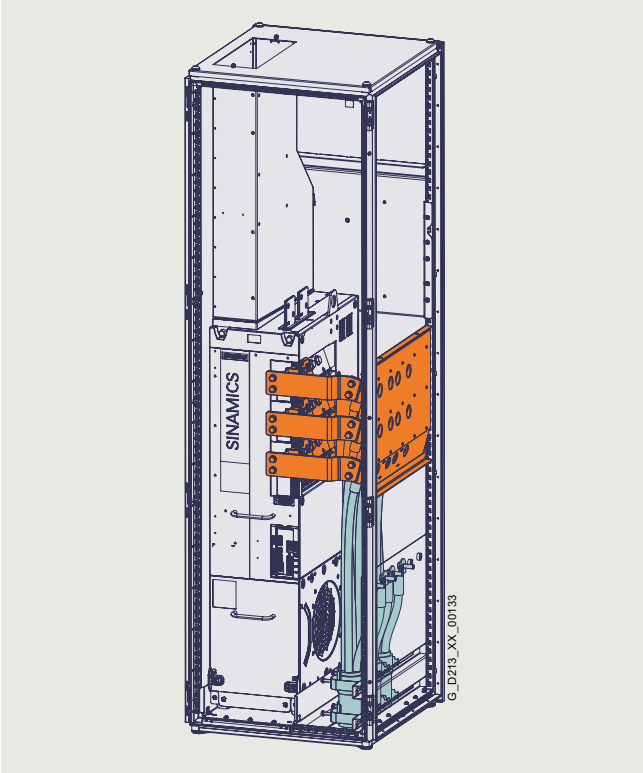

Motor connection kit

© Siemens 2024

Overview

The protection kits make it possible to set up a control cabinet with one of the following degrees of protection:

- The protection kit - Standard enables installation in the IP20 degree of protection.
  It includes a ventilation grille for the top plate.
- The protection kit - Medium enables installation in the IP21 degree of protection.
  It includes a ventilation grille for the top plate, a drip shield with spacers and an air baffle.
- The protection kit - High enables installation in the IP43/IP54 degree of protection.
  It includes a top hood with an integrated air baffle.

The Rittal filter inserts required for the air inlet and air outlet are not included in the scope of delivery.

The following protection kits are available:

Power unit in chassis-2 format	Cabinet width in mm	Achievable degree of protection	Article No. OEM kit
Active Line Module frame sizes FS2/FS2+	400	Standard (IP20)	6SL3760-4CV00-0DA0
Active Line Module frame sizes FS2/FS2+	400	Medium (IP21)	6SL3760-4CV00-0FA0
Active Line Module frame sizes FS2/FS2+	400	High (IP43/IP54)	6SL3760-4CV00-0JA0
Active Line Module frame sizes FS4/FS4+ Motor Module frame sizes FS2/FS2+/FS4/FS4+	600	Standard (IP20)	6SL3760-4CV00-0DA0
Active Line Module frame sizes FS4/FS4+ Motor Module frame sizes FS2/FS2+/FS4/FS4+	600	Medium (IP21)	6SL3760-6CV00-0FA0
Active Line Module frame sizes FS4/FS4+ Motor Module frame sizes FS2/FS2+/FS4/FS4+ Active Interface Module frame sizes FS2/FS4/FS4+	600	High (IP43/IP54)	6SL3760-6CV00-0JA0
Active Interface Module frame sizes FS2/FS4/FS4+	600/800 [1]	Standard (IP20)	6SL3760-8CV00-0DA0
Active Interface Module frame sizes FS2/FS4/FS4+	800 [1]	Medium (IP21)	6SL3760-8CV00-0FA0
Active Interface Module frame sizes FS2/FS4/FS4+	800 [1]	High (IP43/IP54)	6SL3760-8CV00-0JA0

The following Rittal filter inserts must be ordered separately:

Cabinet width in mm	Achievable degree of protection	Quantity Rittal filter inserts	Rittal Article No.
400	Standard (IP20), Medium (IP21)	5	SK 3240.200
400	High (IP43/IP54)	7	SK 3240.200
600	Standard (IP20), Medium (IP21)	4	SK 3243.200
600	High (IP43/IP54)	4	SK 3240.200
		4	SK 3243.200
800	Standard (IP20), Medium (IP21)	8	SK 3240.200
800	High (IP43/IP54)	12	SK 3240.200

The cut-outs in the top plate required to use the ventilation grilles can be made by the customer; ready-prepared cabinets can also be obtained from Rittal.

The cut-outs in the cabinet doors required to use the filter inserts can be made by the customer; ready-prepared cabinet doors can also be obtained from Rittal.

Selection and ordering data

Designation of OEM kit	Article No.
Protection kit - Standard for cabinet width of 400 mm	**6SL3760-4CV00-0DA0**
Protection kit - Medium for cabinet width of 400 mm	**6SL3760-4CV00-0FA0**
Protection kit - High for cabinet width of 400 mm	**6SL3760-4CV00-0JA0**
Protection kit - Standard for cabinet width of 600 mm	**6SL3760-4CV00-0DA0**
Protection kit - Medium for cabinet width of 600 mm	**6SL3760-6CV00-0FA0**
Protection kit - High for cabinet width of 600 mm	**6SL3760-6CV00-0JA0**
Protection kit Active Interface Modules FS2/FS4/FS4+ - Standard for cabinet widths of 600 mm/800 mm	**6SL3760-8CV00-0DA0**
Protection kit - Medium for cabinet width of 800 mm	**6SL3760-8CV00-0FA0**
Protection kit - High for cabinet width of 800 mm	**6SL3760-8CV00-0JA0**

[1] A cabinet width of 800 mm is only required for an Active Interface Module if the line connection kit for Active Interface Modules (6SL3760-6BV00-0EC0) is also to be used.

© Siemens 2024

Integration

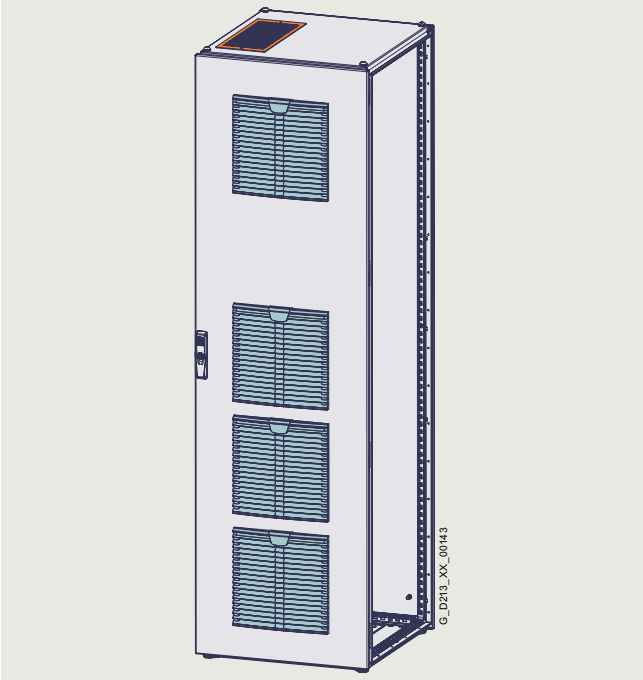

Protection kit - Standard and Rittal filter inserts for control cabinet with cabinet width of 600 mm

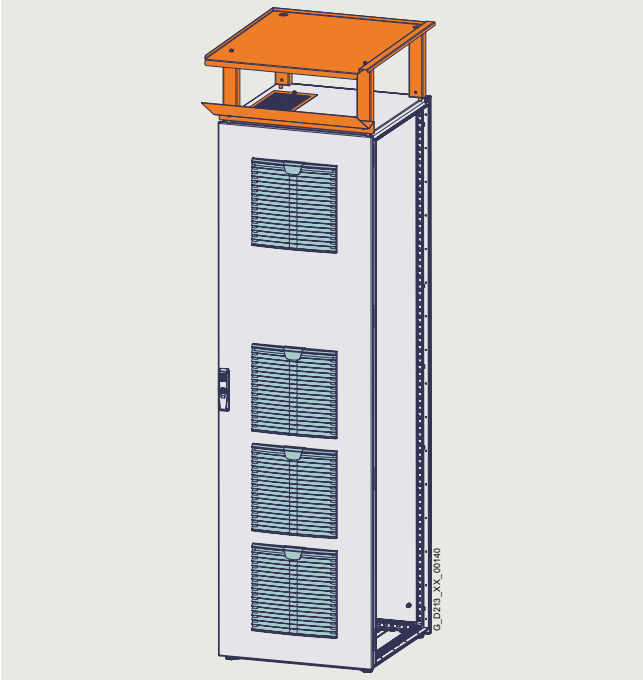

Protection kit - Medium and Rittal filter inserts for control cabinet with cabinet width of 600 mm

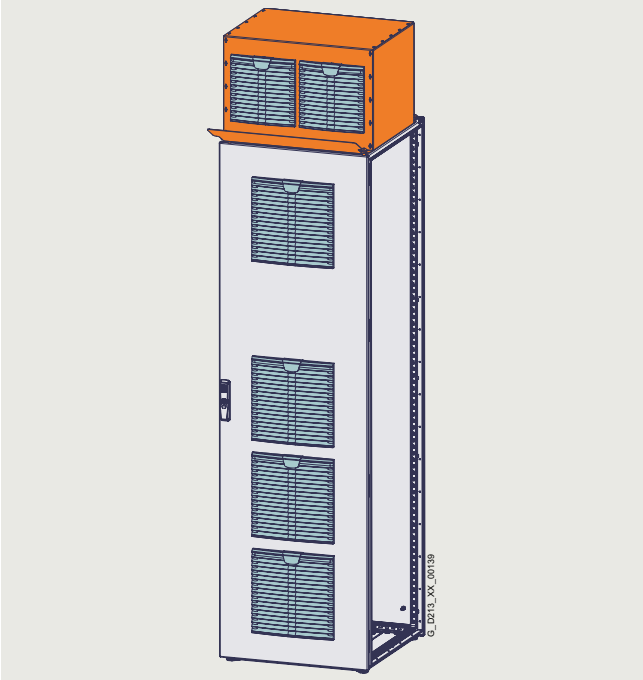

Protection kit - High and Rittal filter inserts for control cabinet with cabinet width of 600 mm

© Siemens 2024

Overview

The installation ramp kit is used to install or remove an Active Line Module or Motor Module in chassis-2 format from the control cabinet.

The installation ramp kit includes a ramp that attaches to the base plate of mechanical installation kit.

Prerequisite for installation ramp kit:

- Mechanical installation kit for Active Line Modules or
- Mechanical installation kit for Motor Modules

Selection and ordering data

Designation of OEM kit	Article No.
Installation ramp kit for Active Line Modules and Motor Modules in chassis-2 format	**6SL3760-6CR22-0CA0**

Integration

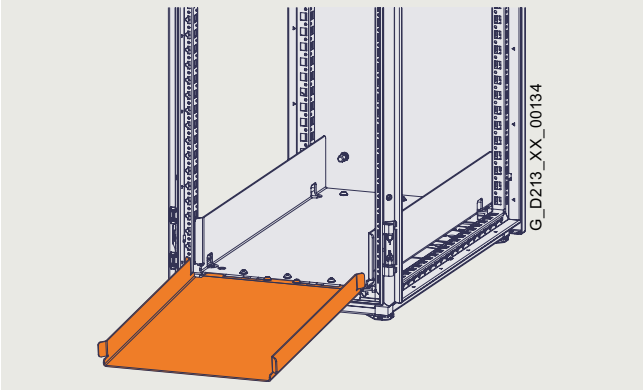

Control cabinet with installation ramp

© Siemens 2024

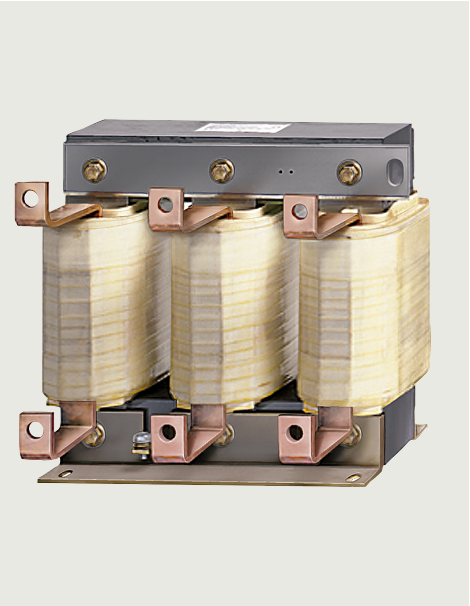

5/2 System components
5/3 Line-side power components
5/3 Line filters
5/7 Line reactors
5/12 Recommended line-side system components
5/21 DC link components
5/21 Braking Modules
5/24 Braking resistors
5/26 DC link fuses
5/29 Motor-side power components
5/29 Motor reactors
5/34 dv/dt filter plus VPL
5/40 dv/dt filter compact plus VPL
5/46 Sine-wave filter
5/48 Control Units
5/51 CU320-2 Control Unit
5/55 CompactFlash card for CU320-2
5/57 CU310-2 Control Unit
5/61 CompactFlash card for CU310-2
5/62 Supplementary system components
5/62 BOP20 Basic Operator Panel
5/63 AOP30 Advanced Operator Panel
5/65 CBE20 Communication Board
5/66 DMC20 DRIVE-CLiQ Hub Module
5/68 DME20 DRIVE-CLiQ Hub Module
5/70 TB30 Terminal Board
5/72 TM15 Terminal Module
5/74 TM31 Terminal Module
5/77 TM41 Terminal Module
5/80 TM54F Terminal Module
5/83 TM120 Terminal Module
5/85 TM150 Terminal Module
5/87 VSM10 Voltage Sensing Module
5/89 SBA Safe Brake Adapter
5/91 Encoder system connection
5/92 SMC10 Sensor Module Cabinet-Mounted
5/93 SMC20 Sensor Module Cabinet-Mounted
5/94 SMC30 Sensor Module Cabinet-Mounted
5/95 Connection system
5/95 Signal cables

© Siemens 2024

Technical specifications

General technical specifications

Unless clearly specified otherwise, the following technical data are valid for all the following system components of the air-cooled and liquid-cooled SINAMICS S120 drive system in chassis and chassis-2 format.

Electrical specifications			
Line voltages	380 ... 480 V 3 AC ±10 % (-15 % <1 min) 500 ... 690 V 3 AC ±10 % (-15 % <1 min)		
Line supply types	Grounded TN/TT systems and non-grounded IT systems		
Line frequency	47 ... 63 Hz		
Overvoltage category	III acc. to EN 61800-5-1		
Electronics power supply	24 V DC, -15 % +20 % implemented as PELV circuit in accordance with EN 61800-5-1 Ground = negative pole grounded via the electronics		
Mechanical specifications			
Degree of protection	IP00 or IP20 depending on type		
Protection class	I acc. to EN 61800-5-1		
Touch protection	EN 50274/DGUV regulation 3 when used as intended		
Ambient conditions	**Storage** [1]	**Transport** [1]	**Operation**
Ambient temperature	-25 ... +55 °C (-13 ... 131 °F) Class 1K4 acc. to EN 60721-3-1 (1997)	-25 ... +70 °C (-13 ... +158 °F) Class 2K4 acc. to EN 60721-3-2 (1997)	Line-side components: 0 … 40 °C (32 ... 104 °F) without derating Up to 55 °C (131 °F), see derating data Control Units, supplementary system components, and Sensor Modules: 0 ... 55 °C (32 ... 131 °F) (for operation in a control cabinet) DC link components and motor-side components: 0 ... 55 °C (32 ... 131 °F)
Relative humidity Condensation, splashwater, and ice formation not permitted (EN 60204, Part 1)	5 ... 95 % Class 1K4 acc. to EN 60721-3-1 (1997)	5 ... 95 % at 40 °C (104 °F) Class 2K4 acc. to EN 60721-3-2 (1997)	5 ... 95 % Class 3K3 acc. to EN 60721-3-3 (2002)
Environmental class/harmful chemical substances	Class 1C2 acc. to EN 60721-3-1 (1997)	Class 2C2 acc. to EN 60721-3-2 (1997)	Class 3C2 acc. to EN 60721-3-3 (2002)
Organic/biological influences	Class 1B1 acc. to EN 60721-3-1 (1997)	Class 2B1 acc. to EN 60721-3-2 (1997)	Class 3B1 acc. to EN 60721-3-3 (2002)
Degree of pollution	2 acc. to IEC/EN 61800-5-1	2 acc. to IEC/EN 61800-5-1	2 acc. to IEC/EN 61800-5-1
Installation altitude	Up to 2000 m (6562 ft) above sea level without derating >2000 m (6562 ft) above sea level, see derating data		
Mechanical stability	**Storage** [1]	**Transport** [1]	**Operation**
Vibratory load	–	Class 2M2 acc. to EN 60721-3-2 (1997)	Test values acc. to EN 60068-2-6 test Fc: • 10 ... 58 Hz with constant deflection 0.075 mm • 58 ... 150 Hz with constant acceleration 9.81 m/s^2 (1 × *g*)
Shock load	–	Class 2M2 acc. to EN 60721-3-2 (1997)	Test values according to EN 60068-2-27 test Ea: 98 m/s^2 (10 × *g*)/20 ms
Compliance with standards			
Conformances/certificates of suitability, according to	CE (EMC Directive 2014/30/EU, Low Voltage Directive 2014/35/EU, Machinery Directive 2006/42/EC for functional safety) cURus or cULus (only for devices connected to line supply voltages 380 ... 480 V 3 AC and 500 ... 600 V 3 AC)		
Radio interference suppression	SINAMICS S120 chassis format units are not designed for connection to the public grid (first environment). Radio interference suppression is compliant with the EMC product standard for variable-speed drives EN 61800-3, "second environment" (industrial line supplies). EMC disturbances can occur when connected to the public grid. However, if additional measures are taken (e.g. → line filter), it can also be operated in the "first environment". For further information, see section Engineering information.		

Deviations from the specified class are underlined.

[1] In transport packaging.

© Siemens 2024

Overview

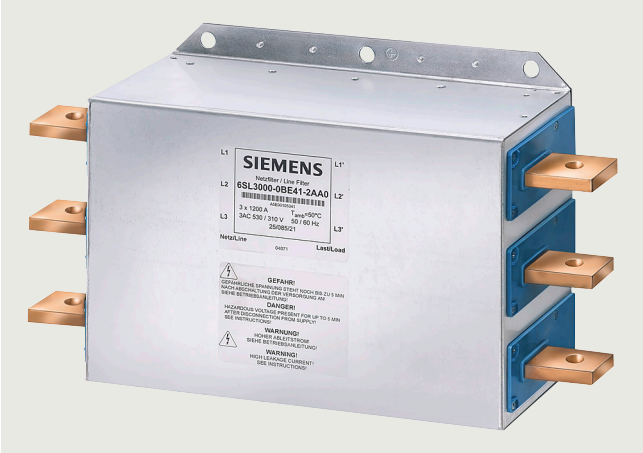

In conjunction with line reactors and a logically consistent configuration of the plant or system, line filters limit the interference conducted by the Line Modules and Power Modules to the limit values of Category C2 acc. to EN 61800-3.

The line filters are suitable for TN and TT supply systems grounded at the neutral point.

Selection and ordering data

Line filters for Power Modules

Suitable for Power Module in chassis format, air-cooled 6SL3310-...	Type rating of the Power Modules at 400 V kW	Rated input current of the Power Module A	**Line filter** Article No.
Line voltage 380 ... 480 V 3 AC			
1TE32-1AA3	110	229	**6SL3000-0BE32-5AA0**
1TE32-6AA3	132	284	**6SL3000-0BE34-4AA0**
1TE33-1AA3	160	338	
1TE33-8AA3	200	395	
1TE35-0AA3	250	509	**6SL3000-0BE36-0AA0**

Line filters for Basic Line Modules

Suitable for Basic Line Module in chassis format, air-cooled 6SL3330-...	Rated power of the Basic Line Module at 400 V or 690 V kW	Rated input current of the Basic Line Module A	**Line filter** Article No.
Line voltage 380 ... 480 V 3 AC			
1TE34-2AA3	200	365	**6SL3000-0BE34-4AA0**
1TE35-3AA3	250	460	**6SL3000-0BE36-0AA0**
1TE38-2AA3	400	710	**6SL3000-0BE41-2AA0**
1TE41-2AA3	560	1010	
1TE41-5AA3	710	1265	**6SL3000-0BE41-6AA0**
1TE41-8AA3	900	1581	
Line voltage 500 ... 690 V 3 AC			
1TG33-0AA3	250	260	**6SL3000-0BG34-4AA0**
1TG34-3AA3	355	375	
1TG36-8AA3	560	575	**6SL3000-0BG36-0AA0**
1TG41-1AA3	900	925	**6SL3000-0BG41-2AA0**
1TG41-4AA3	1100	1180	
7TG41-8AA3	1500	1580	**6SL3000-0BG41-6AA0**

© Siemens 2024

Selection and ordering data

Line filters for Smart Line Modules

Suitable for Smart Line Module in chassis format, air-cooled 6SL3330-...	Rated power of the Smart Line Module at 400 V or 690 V kW	Rated input current of the Smart Line Module A	**Line filter** Article No.
Line voltage 380 ... 480 V 3 AC			
6TE35-5AA3	250	463	**6SL3000-0BE35-0AA0**
6TE37-3AA3	355	614	**6SL3760-0MB00-0AA0**
6TE41-1AA3	500	883	**6SL3760-0MC00-0AA0**
6TE41-3AA3	630	1093	
6TE41-7AA3	800	1430	
Line voltage 500 ... 690 V 3 AC			
6TG35-5AA3	450	463	**6SL3760-0ME00-0AA0**
6TG38-8AA3	710	757	**6SL3760-0MN00-0AA0**
6TG41-2AA3	1000	1009	
6TG41-7AA3	1400	1430	**6SL3760-0MG00-0AA0**

Line filters for Active Line Modules

Suitable for Active Line Module in chassis format, air-cooled 6SL3330-...	Rated power of the Active Line Module at 400 V or 690 V kW	Rated input current of the Active Line Module A	**Line filter** Article No.
Line voltage 380 ... 480 V 3 AC			
7TE32-1AA3	132	210	**6SL3000-0BE33-1AA0**
7TE32-6AA3	160	260	
7TE33-8AA3	235	380	**6SL3000-0BE35-0AA0**
7TE35-0AA3	300	490	
7TE36-1AA3	380	605	**6SL3760-0MB00-0AA0**
7TE37-5AA3	450	745	
7TE38-4AA3	500	840	**6SL3760-0MC00-0AA0**
7TE41-0AA3	630	985	
7TE41-2AA3	800	1260	
7TE41-4AA3	900	1405	
Line voltage 500 ... 690 V 3 AC			
7TG35-8AA3	630	575	**6SL3760-0ME00-0AA0**
7TG37-4AA3	800	735	**6SL3760-0MN00-0AA0**
7TG41-0AA3	1100	1025	
7TG41-3AA3	1400	1270	**6SL3760-0MG00-0AA0**

Note:
Line filters are not available for liquid-cooled Line Modules.

© Siemens 2024

Technical specifications

Line voltage 380 ... 480 V 3 AC		Line filter				
		6SL3000-0BE32-5AA0	6SL3000-0BE34-4AA0	6SL3000-0BE36-0AA0	6SL3000-0BE41-2AA0	6SL3000-0BE41-6AA0
Rated current	A	250	440	600	1200	1600
Power loss [1] At 50 Hz	kW	0.015	0.047	0.053	0.119	0.153
Load/line supply connection		1 × hole for M10 Provided for busbar connection	1 × hole for M10 Provided for busbar connection	1 × hole for M10 Provided for busbar connection	1 × hole for M12 Provided for busbar connection	1 × hole for M12 Provided for busbar connection
PE connection		Hole for M8	Hole for M8	Hole for M10	Hole for M10	Hole for M10
Degree of protection		IP00	IP00	IP00	IP00	IP00
Dimensions						
• Width	mm (in)	360 (14.2)	360 (14.2)	400 (15.7)	425 (16.7)	505 (19.9)
• Height	mm (in)	240 (9.45)	240 (9.45)	265 (10.4)	265 (10.4)	265 (10.4)
• Depth	mm (in)	116 (4.57)	116 (4.57)	140 (5.51)	145 (5.71)	145 (5.71)
Weight, approx.	kg (lb)	12.3 (27.1)	12.3 (27.1)	19 (41.9)	25.8 (56.9)	28.8 (63.5)
Suitable for Power Module in chassis format						
• Air-cooled	6SL3310-	1TE32-1AA3	1TE32-6AA3 1TE33-1AA3 1TE33-8AA3	1TE35-0AA3	–	–
Suitable for Basic Line Module in chassis format						
• Air-cooled	6SL3330-	–	1TE34-2AA3	1TE35-3AA3	1TE38-2AA3 1TE41-2AA3	1TE41-5AA3 1TE41-8AA3

Line voltage 500 ... 690 V 3 AC		Line filter			
		6SL3000-0BG34-4AA0	6SL3000-0BG36-0AA0	6SL3000-0BG41-2AA0	6SL3000-0BG41-6AA0
Rated current	A	440	600	1200	1600
Power loss [1] At 50 Hz	kW	0.047	0.053	0.119	0.153
Load/line supply connection		1 × hole for M10 Provided for busbar connection	1 × hole for M10 Provided for busbar connection	2 × hole for M12 Provided for busbar connection	2 × hole for M12 Provided for busbar connection
PE connection		Hole for M8	Hole for M10	Hole for M10	Hole for M10
Degree of protection		IP00	IP00	IP00	IP00
Dimensions					
• Width	mm (in)	360 (14.2)	400 (15.7)	425 (16.7)	505 (19.9)
• Height	mm (in)	240 (9.45)	265 (10.4)	265 (10.4)	265 (10.4)
• Depth	mm (in)	116 (4.57)	140 (5.51)	145 (5.71)	145 (5.71)
Weight, approx.	kg (lb)	12.3 (27.1)	19 (41.9)	25.2 (55.6)	28.8 (63.5)
Suitable for Basic Line Module in chassis format					
• Air-cooled	6SL3330-	1TG33-0AA3 1TG34-3AA3	1TG36-8AA3	1TG41-1AA3 1TG41-4AA3	1TG41-8AA3

[1] The specified power loss represents the maximum value at 100 % utilization. The value is lower under normal operating conditions.

© Siemens 2024

Technical specifications

Line voltage 380 ... 480 V 3 AC		Line filter			
		6SL3000-0BE33-1AA0	6SL3000-0BE35-0AA0	6SL3760-0MB00-0AA0	6SL3760-0MC00-0AA0
Rated current	A	400	600	840	1405
Power loss [1] At 50 Hz	kW	0.042	0.06	0.058	0.111
Load/line supply connection		M10 connecting lugs	M10 connecting lugs	M10 connecting lugs	M10 connecting lugs
PE connection		Hole for M8	Hole for M10	Hole for M10	Hole for M10
Degree of protection		IP00	IP00	IP00	IP00
Dimensions					
• Width	mm (in)	360 (14.2)	390 (15.4)	425 (16.7)	505 (19.9)
• Height	mm (in)	240 (9.45)	265 (10.4)	265 (10.4)	265 (10.4)
• Depth	mm (in)	116 (4.57)	140 (5.51)	145 (5.71)	145 (5.71)
Weight, approx.	kg (lb)	12.7 (28.0)	19.9 (43.9)	25.9 (57.1)	28.9 (63.7)
Suitable for Smart Line Module in chassis format					
• Air-cooled	6SL3330-	–	6TE35-5AA3	6TE37-3AA3	6TE41-1AA3 6TE41-3AA3 6TE41-7AA3
Suitable for Active Line Module in chassis format					
• Air-cooled	6SL3330-	7TE32-1AA3 7TE32-6AA3	7TE33-8AA3 7TE35-0AA3	7TE36-1AA3 7TE37-5AA3	7TE38-4AA3 7TE41-0AA3 7TE41-2AA3 7TE41-4AA3

Line voltage 500 ... 690 V 3 AC		Line filter		
		6SL3760-0ME00-0AA0	6SL3760-0MN00-0AA0	6SL3760-0MG00-0AA0
Rated current	A	600	1025	1270
Power loss [1] At 50 Hz	kW	0.063	0.063	0.097
Load/line supply connection		M10 connecting lugs	M12 connecting lugs	M12 connecting lugs
PE connection		Hole for M10	Hole for M10	Hole for M10
Degree of protection		IP00	IP00	IP00
Dimensions				
• Width	mm (in)	400 (15.7)	425 (16.7)	505 (19.9)
• Height	mm (in)	365 (14.4)	365 (14.4)	365 (14.4)
• Depth	mm (in)	140 (5.51)	145 (5.71)	145 (5.71)
Weight, approx.	kg (lb)	27 (59.5)	36.7 (80.9)	36.7 (80.9)
Suitable for Smart Line Module in chassis format				
• Air-cooled	6SL3330-	6TG35-5AA3	6TG38-8AA3 6TG41-2AA3	6TG41-7AA3
Suitable for Active Line Module in chassis format				
• Air-cooled	6SL3330-	7TG35-8AA3	7TG37-4AA3 7TG41-0AA3	7TG41-3AA3

[1] The specified power loss represents the maximum value at 100 % utilization. The value is lower under normal operating conditions.

© Siemens 2024

Overview

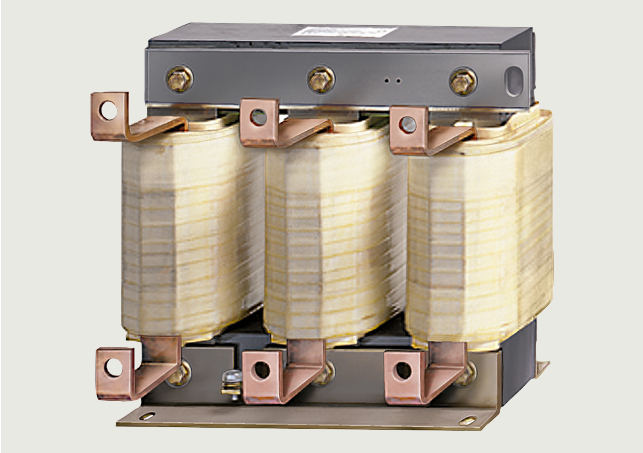

With a high line short-circuit power (i.e. low line supply cable inductance) a line reactor is required in order to

- protect the converter itself from excessively high harmonic currents and therefore overload
- limit the harmonics to permissible values. The harmonic currents are limited by the complete inductance comprising the line reactor and line supply cable inductance.

For additional information, please refer to the SINAMICS Low Voltage Engineering Manual.

Selection and ordering data

Line reactors for Power Modules

Suitable for Power Module in chassis format, air-cooled 6SL3310-...	Suitable for Power Module in chassis format, liquid-cooled 6SL3315-...	Type rating of the Power Modules at 400 V kW	Rated input current of the Power Module A	**Line reactor** Article No.
Line voltage 380 ... 480 V 3 AC				
1TE32-1AA3	1TE32-1AA3	110	229/230	**6SL3000-0CE32-3AA0**
1TE32-6AA3	1TE32-6AA3	132	284/285	**6SL3000-0CE32-8AA0**
1TE33-1AA3	1TE33-1AA3	160	338/340	**6SL3000-0CE33-3AA0**
1TE33-8AA3	–	200	395	**6SL3000-0CE35-1AA0**
1TE35-0AA3	1TE35-0AA3	250	509/540	

© Siemens 2024

Selection and ordering data

Line reactors for Basic Line Modules

Suitable for Basic Line Module in chassis format, air-cooled 6SL3330-...	Suitable for Basic Line Module in chassis format, liquid-cooled 6SL3335-...	Rated power of the Basic Line Module at 400 V or 690 V kW	Rated input current of the Basic Line Module A	**Line reactor** Article No.
Line voltage 380 ... 480 V 3 AC				
1TE34-2AA3	–	200	365	**6SL3000-0CE35-1AA0**
1TE35-3AA3	–	250	460	
–	1TE37-4AA3	360	610	**6SL3000-0CE36-3AA0**
1TE38-2AA3	–	400	710	**6SL3000-0CE37-7AA0**
1TE41-2AA3	–	560	1010	**6SL3000-0CE41-0AA0**
–	1TE41-2AA3	600	1000	
1TE41-5AA3	–	710	1265	**6SL3000-0CE41-5AA0**
–	1TE41-7AA3	830	1420	
1TE41-8AA3	–	900	1581	**6SL3000-0CE41-6AA0**
Line voltage 500 … 690 V 3 AC				
1TG33-0AA3	–	250	260	**6SL3000-0CH32-7AA0**
–	1TG34-2AA3	355	340	**6SL3000-0CH33-4AA0**
1TG34-3AA3	–	355	375	**6SL3000-0CH34-8AA0**
1TG36-8AA3	–	560	575	**6SL3000-0CH36-0AA0**
–	1TG37-3AA3	630	600	
1TG41-1AA3	–	900	925	**6SL3000-0CH41-2AA0**
–	1TG41-3AA3	1100	1070	
1TG41-4AA3	–	1100	1180	
–	1TG41-7AA3	1370	1350	**6SL3000-0CH41-6AA0**
1TG41-8AA3	–	1500	1580	

Line reactors for Smart Line Modules

Suitable for Smart Line Module in chassis format, air-cooled 6SL3330-...	Rated power of the Smart Line Module at 400 V or 690 V kW	Rated input current of the Smart Line Module A	**Line reactor** Article No.
Line voltage 380 ... 480 V 3 AC			
6TE35-5AA3	250	463	**6SL3000-0EE36-2AA0**
6TE37-3AA3	355	614	
6TE41-1AA3	500	883	**6SL3000-0EE38-8AA0**
6TE41-3AA3	630	1093	**6SL3000-0EE41-4AA0**
6TE41-7AA3	800	1430	
Line voltage 500 ... 690 V 3 AC			
6TG35-5AA3	450	463	**6SL3000-0EH34-7AA0**
6TG38-8AA3	710	757	**6SL3000-0EH37-6AA0**
6TG41-2AA3	1000	1009	**6SL3000-0EH41-4AA0**
6TG41-7AA3	1400	1430	

© Siemens 2024

Technical specifications

Line voltage 380 ... 480 V 3 AC		Line reactor					
		6SL3000-0CE32-3AA0	6SL3000-0CE32-8AA0	6SL3000-0CE33-3AA0	6SL3000-0CE35-1AA0	6SL3000-0CE36-3AA0	6SL3000-0CE37-7AA0
Rated current	A	224	278	331	508	628	773
Nominal inductance L_N	µH	76	62	52	42	27	22
Power loss [1] At 50 Hz	kW	0.274	0.247	0.267	0.365	0.368	0.351
Line/load connection		1 × hole for M10 Provided for busbar connection	1 × hole for M10 Provided for busbar connection	1 × hole for M10 Provided for busbar connection	1 × hole for M12 Provided for busbar connection	1 × hole for M12 Provided for busbar connection	1 × hole for M12 Provided for busbar connection
PE connection		M6 screw	M6 screw	M6 screw	M6 screw	M6 screw	M6 screw
Degree of protection		IP00	IP00	IP00	IP00	IP00	IP00
Dimensions							
• Width	mm (in)	270 (10.6)	270 (10.6)	270 (10.6)	300 (11.8)	300 (11.8)	300 (11.8)
• Height	mm (in)	248 (9.76)	248 (9.76)	248 (9.76)	269 (10.6)	269 (10.6)	269 (10.6)
• Depth	mm (in)	200 (7.87)	200 (7.87)	200 (7.87)	212.5 (8.37)	212.5 (8.37)	212.2 (8.35)
Weight, approx.	kg (lb)	24.5 (54.0)	26 (57.3)	27.8 (61.3)	38 (83.8)	41.4 (91.3)	51.3 (113)
Suitable for Power Module in chassis format							
• Air-cooled	6SL3310-	1TE32-1AA3	1TE32-6AA3	1TE33-1AA3	1TE33-8AA3 1TE35-0AA3	–	–
• Liquid-cooled	6SL3315-	1TE32-1AA3	1TE32-6AA3	1TE33-1AA3	1TE35-0AA3	–	–
Suitable for Basic Line Module in chassis format							
• Air-cooled	6SL3330-	–	–	–	1TE34-2AA3 1TE35-3AA3	–	1TE38-2AA3
• Liquid-cooled	6SL3335-	–	–	–	–	1TE37-4AA3	–

Line voltage 380 ... 480 V 3 AC		Line reactor		
		6SL3000-0CE41-0AA0	6SL3000-0CE41-5AA0	6SL3000-0CE41-6AA0
Rated current	A	1060	1485	1600
Nominal inductance L_N	µH	16	13	13
Power loss [1] At 50 Hz	kW	0.498	0.776	0.606
Line/load connection		1 × hole for M12 Provided for busbar connection	1 × hole for M12 Provided for busbar connection	1 × hole for M12 Provided for busbar connection
PE connection		M6 screw	M6 screw	M6 screw
Degree of protection		IP00	IP00	IP00
Dimensions				
• Width	mm (in)	350 (13.8)	460 (18.1)	416 (16.4)
• Height	mm (in)	321 (12.6)	435 (17.1)	435 (17.1)
• Depth	mm (in)	211.5 (8.33)	235 (9.25)	235 (9.25)
Weight, approx.	kg (lb)	69.6 (153)	118 (260)	123 (271)
Suitable for Basic Line Module in chassis format				
• Air-cooled	6SL3330-	1TE41-2AA3	1TE41-5AA3	1TE41-8AA3
• Liquid-cooled	6SL3335-	1TE41-2AA3	1TE41-7AA3	–

[1] The specified power loss represents the maximum value at 100 % utilization. The value is lower under normal operating conditions.

© Siemens 2024

Technical specifications

Line voltage 380 ... 480 V 3 AC		Line reactor		
		6SL3000-0EE36-2AA0	6SL3000-0EE38-8AA0	6SL3000-0EE41-4AA0
Rated current	A	615	885	1430
Nominal inductance L_N	µH	55	35	25
Power loss [1] At 50 Hz	kW	0.56	0.81	1.08
Line/load connection		1 × hole for M10 Provided for busbar connection	2 × hole for M10 Provided for busbar connection	2 × hole for M10 Provided for busbar connection
PE connection		M6 thread	M6 thread	M6 thread
Degree of protection		IP00	IP00	IP00
Dimensions				
• Width	mm (in)	300 (11.8)	442 (17.4)	544 (21.4)
• Height	mm (in)	264 (10.4)	376 (14.8)	386 (15.2)
• Depth	mm (in)	203 (7.99)	263 (10.4)	232 (9.13)
Weight, approx.	kg (lb)	57 (126)	85.5 (188)	220 (485)
Suitable for Smart Line Module in chassis format				
• Air-cooled	6SL3330-	6TE35-5AA3 6TE37-3AA3	6TE41-1AA3	6TE41-3AA3 6TE41-7AA3

Line voltage 500 ... 690 V 3 AC		Line reactor					
		6SL3000-0CH32-7AA0	6SL3000-0CH33-4AA0	6SL3000-0CH34-8AA0	6SL3000-0CH36-0AA0	6SL3000-0CH41-2AA0	6SL3000-0CH41-6AA0
Rated current	A	270	342	482	597	1167	1600
Nominal inductance L_N	µH	100	81	65	46	30	17
Power loss [1] At 50 Hz	kW	0.277	0.27	0.48	0.485	0.783	0.977
Line/load connection		1 × hole for M10 Provided for busbar connection	1 × hole for M10 Provided for busbar connection	1 × hole for M12 Provided for busbar connection	1 × hole for M12 Provided for busbar connection	2 × hole for M12 Provided for busbar connection	2 × hole for M12 Provided for busbar connection
PE connection		M6 screw	M6 screw	M6 screw	M6 screw	M6 screw	M6 screw
Degree of protection		IP00	IP00	IP00	IP00	IP00	IP00
Dimensions							
• Width	mm (in)	270 (10.6)	270 (10.6)	350 (13.8)	350 (13.8)	460 (18.1)	416 (16.4)
• Height	mm (in)	248 (9.76)	248 (9.76)	321 (12.6)	321 (12.6)	435 (17.1)	435 (17.1)
• Depth	mm (in)	200 (7.87)	200 (7.87)	232 (9.13)	232.5 (9.15)	235 (9.25)	250 (9.84)
Weight, approx.	kg (lb)	27.9 (61.5)	38.9 (85.8)	55.6 (123)	63.8 (141)	147 (324)	134 (295)
Suitable for Basic Line Module in chassis format							
• Air-cooled	6SL3330-	1TG33-0AA3	–	1TG34-3AA3	1TG36-8AA3	1TG41-1AA3 1TG41-4AA3	1TG41-8AA3
• Liquid-cooled	6SL3335-	–	1TG34-2AA3	–	1TG37-3AA3	1TG41-3AA3	1TG41-7AA3

[1] The specified power loss represents the maximum value at 100 % utilization. The value is lower under normal operating conditions.

© Siemens 2024

Technical specifications

Line voltage 500 ... 690 V 3 AC		Line reactor		
		6SL3000-0EH34-7AA0	6SL3000-0EH37-6AA0	6SL3000-0EH41-4AA0
Rated current	A	465	760	1430
Nominal inductance L_N	µH	115	70	40
Power loss [1] At 50 Hz	kW	0.82	0.95	1.85
Line/load connection		1 × hole for M10 Provided for busbar connection	2 × hole for M10 Provided for busbar connection	2 × hole for M10 Provided for busbar connection
PE connection		M6 nut	M6 nut	M6 nut
Degree of protection		IP00	IP00	IP00
Dimensions				
• Width	mm (in)	360 (14.2)	442 (17.4)	655 (25.8)
• Height	mm (in)	325 (12.8)	370 (14.6)	383 (15.1)
• Depth	mm (in)	229 (9.02)	303 (11.9)	288 (11.3)
Weight, approx.	kg (lb)	58 (128)	145 (320)	239 (527)
Suitable for Smart Line Module in chassis format				
• Air-cooled	6SL3330-	6TG35-5AA3	6TG38-8AA3	6TG41-2AA3 6TG41-7AA3

[1] The specified power loss represents the maximum value at 100 % utilization. The value is lower under normal operating conditions.

© Siemens 2024

Selection and ordering data

Appropriate line-side power components are assigned depending on the power rating of the Power Modules, Basic Line Modules, Smart Line Modules or Active Line Modules.

More information about the main contactors, switch disconnectors, fuses and circuit breakers is provided in the Catalogs IC 10 and LV 10.

Assignment of line-side power components to air-cooled and liquid-cooled Power Modules in chassis format

Type rating at 400 V	Rated input current		Suitable for Power Module in chassis format	**Main contactor**	**Switch disconnector**	**Handle and shaft for recommended switch disconnector**
	Air-cooled	Liquid-cooled				
kW	A	A	6SL3310-... [1] 6SL3315-... [2]	Article No.	Article No.	Article No.
Line voltage 380 ... 480 V 3 AC						
110	229	230	1TE32-1AA3	**3RT1064-6AP36**	**3KF3325-0LF11**	**8UD1141-3AF21**
132	284	285	1TE32-6AA3	**3RT1065-6AP36**	**3KF4340-0LF11**	**8UD1151-3AF21**
160	338	340	1TE33-1AA3	**3RT1066-6AP36**	–	
200	395	–	1TE33-8AA3	**3RT1075-6AP36**	–	
250	509	540	1TE35-0AA3	**3RT1076-6AP36**	**3KF5363-0LF11**	**8UD1161-4AF21**

Type rating at 400 V	Rated input current		Suitable for Power Module in chassis format	**Cable protection fuse [3]**		**Cable protection fuse incl. Semiconductor protection [4]**	
	Air-cooled	Liquid-cooled		Rated current		Rated current	
kW	A	A	6SL3310-... [1] 6SL3315-... [2]	A	Article No.	A	Article No.
Line voltage 380 ... 480 V 3 AC							
110	229	230	1TE32-1AA3	250	**3NA3144**	315	**3NE1230-2**
132	284	285	1TE32-6AA3	300	**3NA3250**	350	**3NE1331-2**
160	338	340	1TE33-1AA3	355	**3NA3254**	450	**3NE1333-2**
200	395	–	1TE33-8AA3	400	**3NA3260**		
250	509	540	1TE35-0AA3	630	**3NA3372**	2 × 315/630	**3NE1230-2** or **3NE1436-2**

[1] 6SL3310-… is the air-cooled version.

[2] 6SL3315-... is the liquid-cooled version.

[3] For additional conductor protection, the specified fuses of type 3NA3... can be used.

[4] For device protection, only fuses of type 3NE1… can be used. These must be placed as close as possible to the converter.

© Siemens 2024

Selection and ordering data

Assignment of line-side power components to air-cooled and liquid-cooled Basic Line Modules in chassis format

Rated power at 400 V or 690 V kW	Rated input current A	Suitable for Basic Line Module	Main contactor Type	**Fixed-mounted circuit breaker** Article No.	**Switch disconnector** Article No.	**Handle and shaft for recommended switch disconnector** Article No.
Line voltage 380 ... 480 V 3 AC						
200	365	6SL3330-1TE34-2AA3 [1]	**3RT1075-...**	–	**3KF5363-0LF11**	**8UD1161-4AF21**
250	460	6SL3330-1TE35-3AA3 [1]	**3RT1076-...**	–	**3KF5363-0LF11**	**8UD1161-4AF21**
360	610	6SL3335-1TE37-4AA3 [2]	**3RT1076-...**	–	**3KF5363-0LF11**	**8UD1161-4AF21**
400	710	6SL3330-1TE38-2AA3 [1]	**3RT1066-...** (3 units)	–	**3KF5380-0LF11**	**8UD1161-4AF21**
560	1010	6SL3330-1TE41-2AA3 [1]	–	**3WA1112-4AE03-4EQ0**	–	–
600	1000	6SL3335-1TE41-2AA3 [2]	–	**3WA1112-4AE03-4EQ0**	–	–
710	1265	6SL3330-1TE41-5AA3 [1]	–	**3WA1116-4AE03-4EQ0**	–	–
830	1420	6SL3335-1TE41-7AA3 [2]	–	**3WA1116-4AE03-4EQ0**	–	–
900	1630	6SL3330-1TE41-8AA3 [1]	–	**3WA1120-4AE03-4EQ0**	–	–
Line voltage 500 ... 690 V 3 AC						
250	260	6SL3330-1TG33-0AA3 [1]	**3RT1066-...**	–	**3KF4340-0LF11**	**8UD1151-4AF21**
355	375	6SL3330-1TG34-3AA3 [1]	**3RT1075-...**	–	**3KF5363-0LF11**	**8UD1161-4AF21**
	340	6SL3335-1TG34-2AA3 [2]				
560	575	6SL3330-1TG36-8AA3 [1]	**3RT1076-...**	–	**3KF5363-0LF11**	**8UD1161-4AF21**
630	600	6SL3335-1TG37-3AA3 [2]	**3RT1076-...**	–	**3KF5363-0LF11**	**8UD1161-4AF21**
900	925	6SL3330-1TG41-1AA3 [1]	–	**3WA1220-4AE03-4EQ0-Z** **B10**	–	–
1100	1180	6SL3330-1TG41-4AA3 [1]	–	**3WA1220-4AE03-4EQ0-Z** **B12**	–	–
	1070	6SL3335-1TG41-3AA3 [2]				
1370	1350	6SL3335-1TG41-7AA3 [2]	–	**3WA1220-4AE03-4EQ0-Z** **B16**	–	–
1500	1580	6SL3330-1TG41-8AA3 [1]	–	**3WA1220-4AE03-4EQ0**	–	–

[1] 6SL3330-… is the air-cooled version.
[2] 6SL3335-… is the liquid-cooled version.

© Siemens 2024

Selection and ordering data

Rated power at 400 V or 690 V	Rated input current	Suitable for Basic Line Module	**Cable protection fuse**[3]		**Cable protection fuse incl. Semiconductor protection**[4]	
			Rated current		Rated current	
kW	A		A	Article No.	A	Article No.
Line voltage 380 ... 480 V 3 AC						
200	365	6SL3330-1TE34-2AA3 [1]	500	**3NA3365**	450	**3NE1333-2**
250	460	6SL3330-1TE35-3AA3 [1]	630	**3NA3372**	500	**3NE1334-2**
360	610	6SL3335-1TE37-4AA3 [2]	2 × 315	**3NA3352** (2 units)	2 × 450	**3NE1333-2** (2 units)
400	710	6SL3330-1TE38-2AA3 [1]	800	**3NA3475**	800	**3NE1438-2**
560	1010	6SL3330-1TE41-2AA3 [1]	1250	**3NA3482**	2 × 560	**3NE1435-2** (2 units)
600	1000	6SL3335-1TE41-2AA3 [2]	2 × 500	**3NA3365** (2 units)	2 × 560	**3NE1435-2** (2 units)
710	1265	6SL3330-1TE41-5AA3 [1]	2 × 800	**3NA3475** (2 units)	2 × 710	**3NE1437-2** (2 units)
830	1420	6SL3335-1TE41-7AA3 [2]	3 × 500	**3NA3365** (3 units)	2 × 800	**3NE1438-2** (2 units)
900	1630	6SL3330-1TE41-8AA3 [1]	3 × 630	**3NA3372** (3 units)	3 × 630	**3NE1436-2** (3 units)
Line voltage 500 ... 690 V 3 AC						
250	260	6SL3330-1TG33-0AA3 [1]	315	**3NA3252-6**	315	**3NE1230-2**
355	375	6SL3330-1TG34-3AA3 [1]	500	**3NA3365-6**	450	**3NE1333-2**
	340	6SL3335-1TG34-2AA3 [2]	355	**3NA3354-6**		
560	575	6SL3330-1TG36-8AA3 [1]	2 × 315	**3NA3252-6** (2 units)	630	**3NE1436-2**
630	600	6SL3335-1TG37-3AA3 [2]	2 × 300	**3NA3250-6** (2 units)	2 × 350	**3NE1331-2** (2 units)
900	925	6SL3330-1TG41-1AA3 [1]	2 × 500	**3NA3365-6** (2 units)	2 × 500	**3NE1334-2** (2 units)
1100	1180	6SL3330-1TG41-4AA3 [1]	3 × 500	**3NA3365-6** (3 units)	2 × 630	**3NE1436-2** (2 units)
	1070	6SL3335-1TG41-3AA3 [2]	3 × 400	**3NA3360-6** (3 units)	2 × 670	**3NE1447-2** (2 units)
1370	1350	6SL3335-1TG41-7AA3 [2]	3 × 500	**3NA3365-6** (3 units)	3 × 560	**3NE1435-2** (3 units)
1500	1580	6SL3330-1TG41-8AA3 [1]	4 × 500	**3NA3365-6** (4 units)	3 × 630	**3NE1436-2** (3 units)

Power components for the pre-charging circuit of the Basic Line Modules in chassis format, frame size GD

Rated power at 400 V or 690 V	Rated input current	Suitable for Basic Line Module	**Pre-charging resistors**		**Pre-charging contactor**	**Cable protection fuse for pre-charging arm**	
			Pre-charging current [5]			Rated current	
kW	A	6SL3330-...	A	Article No.	Type	A	Article No.
Line voltage 380 ... 480 V 3 AC							
900	1630	1TE41-8AA3	91 [6] 182 [7]	**6SL3000-0KE12-2AA0**	**3RT1034-... [6]** **3RT1044-... [7]**	50 100	**3NE1817-0 [6]** **3NE1021-0 [7]**
Line voltage 500 ... 690 V 3 AC							
1500	1580	1TG41-8AA3	86 [6] 172 [7]	**6SL3000-0KH14-0AA0**	**3RT1034-... [6]** **3RT1044-... [7]**	50 100	**3NE1817-0 [6]** **3NE1021-0 [7]**

Note:
The dimension drawings of the pre-charging resistors are to be found in the dimension drawing collection for Catalog D 21.3 in the Siemens Industry Online Support (SIOS).

1) 6SL3330-… is the air-cooled version.
2) 6SL3335-… is the liquid-cooled version.
3) For additional conductor protection, the specified fuses of type 3NA3... can be used.
4) For device protection, only fuses of type 3NE1… can be used. These must be placed as close as possible to the converter.
5) Line current present at the start of the pre-charging process (initial rms value).
6) With one pre-charging resistor per phase.
7) With two pre-charging resistors connected in parallel per phase.

© Siemens 2024

Selection and ordering data

Assignment of line-side power components to Smart Line Modules in chassis format

Rated power at 400 V or 690 V kW	Rated input current A	Suitable for Smart Line Module 6SL3330-...	**Main contactor** Article No.	**Bypass contactor** Article No.	**Switch disconnector** Article No.	**Handle and shaft for recommended switch disconnector** Article No.
Line voltage 380 ... 480 V 3 AC						
250	463	6TE35-5AA3	**3RT1476-6AP36**	–	**3KF5363-0LF11**	**8UD1161-4AF21**
355	614	6TE37-3AA3	**3RT1476-6AP36**	–	**3KF5380-0LF11**	**8UD1161-4AF21**
500	883	6TE41-1AA3	–	**3WA1110-4AE03-4EQ0**	–	–
630	1093	6TE41-3AA3	–	**3WA1112-4AE03-4EQ0**	–	–
800	1430	6TE41-7AA3	–	**3WA1116-4AE03-4EQ0**	–	–
Line voltage 500 ... 690 V 3 AC						
450	463	6TG35-5AA3	**3RT1466-6AP36**	–	**3KF5363-0LF11**	**8UD1161-4AF21**
710	757	6TG38-8AA3	**3RT1466-6AP36** (3 units)	–	**3KF5380-0LF11**	**8UD1161-4AF21**
1000	1009	6TG41-2AA3	–	**3WA1220-4AE03-4EQ0-Z** **B12**	–	–
1400	1430	6TG41-7AA3	–	**3WA1220-4AE03-4EQ0-Z** **B16**	–	–

Rated power at 400 V or 690 V kW	Rated input current A	Suitable for Smart Line Module 6SL3330-...	**Cable protection fuse** [1] Rated current A	 Article No.	**Cable protection fuse incl. semiconductor protection** [2] Rated current A	 Article No.
Line voltage 380 ... 480 V 3 AC						
250	463	6TE35-5AA3	500	**3NA3365**	560	**3NE1435-2**
355	614	6TE37-3AA3	630	**3NA3372**	710	**3NE1437-2**
500	883	6TE41-1AA3	1000	**3NA3480**	2 × 500	**3NE1334-2** (2 units)
630	1093	6TE41-3AA3	1250	**3NA3482**	2 × 630	**3NE1436-2** (2 units)
800	1430	6TE41-7AA3	2 × 800	**3NA3475** (2 units)	2 × 850	**3NE1448-2** (2 units)
Line voltage 500 ... 690 V 3 AC						
450	463	6TG35-5AA3	500	**3NA3365-6**	560	**3NE1435-2**
710	757	6TG38-8AA3	2 × 400	**3NA3360-6** (2 units)	850	**3NE1448-2**
1000	1009	6TG41-2AA3	3 × 355	**3NA3354-6** (3 units)	2 × 560	**3NE1435-2** (2 units)
1400	1430	6TG41-7AA3	3 × 500	**3NA3365-6** (3 units)	2 × 850	**3NE1448-2** (2 units)

[1] For additional conductor protection, the specified fuses of type 3NA3... can be used.

[2] For device protection, only fuses of type 3NE1… can be used. These must be placed as close as possible to the converter.

© Siemens 2024

Selection and ordering data

Assignment of line-side power components to air-cooled and liquid-cooled Active Line Modules or Active Interface Modules in chassis format

Rated power at 400 V or 690 V kW	Rated input current A	Suitable for Active Interface Module	Suitable for Active Line Module	**Bypass contactor** Article No.
Line voltage 380 ... 480 V 3 AC				
132	210	6SL3300-7TE32-6AA1	6SL3330-7TE32-1AA3	Included in Active Interface Module
160	260	6SL3300-7TE32-6AA1	6SL3330-7TE32-6AA3	Included in Active Interface Module
235	380	6SL3300-7TE33-8AA1	6SL3330-7TE33-8AA3	Included in Active Interface Module
300	490	6SL3300-7TE35-0AA1	6SL3330-7TE35-0AA3 6SL3335-7TE35-0AA3	Included in Active Interface Module
380	605	6SL3300-7TE38-4AA1 6SL3305-7TE38-4AA5	6SL3330-7TE36-1AA3 6SL3335-7TE36-1AA3	**3RT1476-6AP36**
450	745	6SL3300-7TE38-4AA1	6SL3330-7TE37-5AA3	**3WA1110-4AE03-4EQ0**
500	840	6SL3300-7TE38-4AA1 6SL3305-7TE38-4AA5	6SL3330-7TE38-4AA3 6SL3335-7TE38-4AA3	**3WA1110-4AE03-4EQ0**
630	985	6SL3300-7TE41-4AA1 6SL3305-7TE41-4AA5	6SL3330-7TE41-0AA3 6SL3335-7TE41-0AA3	**3WA1112-4AE03-4EQ0**
800	1260	6SL3300-7TE41-4AA1	6SL3330-7TE41-2AA3	**3WA1116-4AE03-4EQ0**
900	1405	6SL3300-7TE41-4AA1 6SL3305-7TE41-4AA5	6SL3330-7TE41-4AA3 6SL3335-7TE41-4AA3	**3WA1116-4AE03-4EQ0**
Line voltage 500 ... 690 V 3 AC				
630	575	6SL3300-7TG35-8AA1	6SL3330-7TG35-8AA3 6SL3335-7TG35-8AA3	**3RT1476-6AP36**
800	735	6SL3300-7TG37-4AA1 6SL3305-7TG37-4AA5	6SL3330-7TG37-4AA3 6SL3335-7TG37-4AA3	**3RT1476-6AP36** (3 units)
900	810	6SL3305-7TG41-0AA5	6SL3335-7TG38-1AA3	**3WA1220-4AE03-4EQ0-Z** **B12**
1100	1025	6SL3300-7TG41-3AA1 6SL3305-7TG41-0AA5	6SL3330-7TG41-0AA3 6SL3335-7TG41-0AA3	**3WA1220-4AE03-4EQ0-Z** **B12**
1400	1270	6SL3300-7TG41-3AA1 6SL3305-7TG41-3AA5	6SL3330-7TG41-3AA3 6SL3335-7TG41-3AA3	**3WA1220-4AE03-4EQ0-Z** **B16**
1700	1560	6SL3305-7TG41-6AA5	6SL3335-7TG41-6AA3	**3WA1220-4AE03-4EQ0-Z** **B16**

© Siemens 2024

Selection and ordering data

Rated power at 400 V or 690 V	Rated input current	Suitable for Active Interface Module	Suitable for Active Line Module	**Switch disconnector**	**Handle and shaft for recommended switch disconnector**	**Cable protection fuse [2]**		**Cable protection fuse incl. semiconductor protection [3]**	
						Rated current		Rated current	
kW	A	6SL3300-... 6SL3305-...	6SL3330-... 6SL3335-...	Article No.	Article No.	A	Article No.	A	Article No.
Line voltage 380 ... 480 V 3 AC									
132	210	7TE32-6AA1	7TE32-1AA3	**3KF3325-0LF11**	**8UD1141-3AF21**	315	**3NA3252**	315	**3NE1230-2**
160	260	7TE32-6AA1	7TE32-6AA3	**3KF4340-0LF11**	**8UD1151-3AF21**	355	**3NA3254**	350	**3NE1331-2**
235	380	7TE33-8AA1	7TE33-8AA3	**3KF4340-0LF11**	**8UD1151-3AF21**	500	**3NA3365**	500	**3NE1334-2**
300	490	7TE35-0AA1	7TE35-0AA3 7TE35-0AA3 [1]	**3KF5363-0LF11**	**8UD1161-4AF21**	630	**3NA3372**	630	**3NE1436-2**
380	605	7TE38-4AA1 7TE38-4AA5 [1]	7TE36-1AA3 7TE36-1AA3 [1]	**3KF5380-0LF11**	**8UD1161-4AF21**	800	**3NA3475**	800	**3NE1438-2**
450	745	7TE38-4AA1	7TE37-5AA3	–	–	2 x 400	**3NA3260**	2 x 450	**3NE1333-2**
500	840	7TE38-4AA1 7TE38-4AA5 [1]	7TE38-4AA3 7TE38-4AA3 [1]	–	–	2 × 425	**3NA3362** (2 units)	2 × 500	**3NE1334-2** (2 units)
630	985	7TE41-4AA1 7TE41-4AA5 [1]	7TE41-0AA3 7TE41-0AA3 [1]	–	–	2 × 500	**3NA3365** (2 units)	2 × 630	**3NE1436-2** (2 units)
800	1260	7TE41-4AA1	7TE41-2AA3	–	–	3 × 425	**3NA3362** (2 units)	2 × 850	**3NE1448-2** (2 units)
900	1405	7TE41-4AA1 7TE41-4AA5 [1]	7TE41-4AA3 7TE41-4AA3 [1]	–	–	3 × 500	**3NA3365** (3 units)	2 × 850	**3NE1448-2** (2 units)
Line voltage 500 ... 690 V 3 AC									
560/630	575	7TG35-8AA1	7TG35-8AA3 7TG35-8AA3 [1]	**3KF5363-0LF11**	**8UD1161-4AF21**	2 × 315	**3NA3352-6** (2 units)	670	**3NE1447-2**
800	735	7TG37-4AA1 7TG37-4AA5 [1]	7TG37-4AA3 7TG37-4AA3 [1]	**3KF5380-0LF11**	**8UD1161-4AF21**	2 × 400	**3NA3360-6** (2 units)	850	**3NE1448-2**
900	810	7TG41-0AA5 [1]	7TG38-1AA3 [1]	–	–	2 × 500	**3NA3365-6** (2 units)	2 x 560	**3NE1435-2** (2 units)
1100	1025	7TG41-3AA1 7TG41-0AA5 [1]	7TG41-0AA3 7TG41-0AA3 [1]	–	–	3 × 355	**3NA3354-6** (3 units)	2 × 630	**3NE1436-2** (2 units)
1400	1270	7TG41-3AA1 7TG41-3AA5 [1]	7TG41-3AA3 7TG41-3AA3 [1]	–	–	3 × 500	**3NA3365-6** (3 units)	2 × 800	**3NE1438-2** (2 units)
1700	1560	7TG41-6AA5 [1]	7TG41-6AA3 [1]	–	–	4 x 500	**3NA3365-6** (4 units)	3 x 630	**3NE1436-2** (3 units)

[1] Liquid-cooled version, 6SL3305-... or 6SL3335-...

[2] For additional conductor protection, the specified fuses of type 3NA3... can be used.

[3] For device protection, only fuses of type 3NE1… can be used. These must be placed as close as possible to the converter.

© Siemens 2024

Selection and ordering data

Assignment of line-side power components to Active Line Modules or Active Interface Modules in chassis-2 format

Rated power at 400 V kW	Rated input current A	Suitable for Active Interface Module 6SL3301-...	Suitable for Active Line Module 6SL3331-...	**Switch disconnector** **Article No.**	**Handle and shaft for recommended switch disconnector** **Article No.**
Line voltage 380 ... 480 V 3 AC					
355	560	7TE36-4AA0	7TE35-6AA0	**3KF5380-0LF11**	**8UD1161-4AF21**
400	635	7TE36-4AA0	7TE36-4AA0	**3KF5380-0LF11**	**8UD1161-4AF21**
450	745	7TE41-0AA0	7TE37-5AA0	–	–
500	840	7TE41-0AA0	7TE38-4AA0	–	–
560	900	7TE41-0AA0	1TE38-8AA0	–	–
630	985	7TE41-0AA0	1TE41-0AA0	–	–
710	1110	7TE41-4AA0	1TE41-2AA0	–	–
800	1260	7TE41-4AA0	1TE41-3AA0	–	–
900	1405	7TE41-4AA0	1TE41-4AA0	–	–

Rated power at 400 V	Rated input current	Suitable for Active Interface Module	Suitable for Active Line Module	**Line protection fuse**		**Line protection fuse incl. semiconductor protection**		**Line protection fuse acc. to UL [3]**	
				Rated current		Rated current		Rated current	
kW	A	6SL3301-...	6SL3331-...	A	Article No.	A	Article No.	A	Article No.
Line voltage 380 ... 480 V 3 AC									
355	560	7TE36-4AA0	7TE35-6AA0	800	**3NA3475**	800	**3NE1438-2**	800	**3NE1438-2**
400	635	7TE36-4AA0	7TE36-4AA0	800	**3NA3475**	800	**3NE1438-2**	800	**3NE1438-2**
450	745	7TE41-0AA0	7TE37-5AA0	2 x 400	**3NA3260** (2 units)	2 x 450	**3NE1333-2** (2 units [4])	1000	**3NB3350-1KK26**
500	840	7TE41-0AA0	7TE38-4AA0	2 x 425	**3NA3362** (2 units)	2 x 500	**3NE1334-2** (2 units [4])	1000	**3NB3350-1KK26**
560	900	7TE41-0AA0	1TE38-8AA0	2 x 500	**3NA3365** (2 units)	2 x 500	**3NE1435-2** (2 units [4])	1100	**3NB3351-1KK26**
630	985	7TE41-0AA0	1TE41-0AA0	2 x 500	**3NA3365** (2 units)	2 x 630	**3NE1436-2** (2 units [4])	1250	**3NB3352-1KK26**
710	1110	7TE41-4AA0	1TE41-2AA0	3 x 425	**3NA3362** (3 units)	2 x 850	**3NE1448-2** (2 units [4])	1700	**3NB3358-1KK26**
800	1260	7TE41-4AA0	1TE41-3AA0	3 x 425	**3NA3362** (3 units)	2 x 850	**3NE1448-2** (2 units [4])	1700	**3NB3358-1KK26**
900	1405	7TE41-4AA0	1TE41-4AA0	3 x 500	**3NA3365** (3 units)	2 x 850	**3NE1448-2** (2 units [4])	1700	**3NB3358-1KK26**

[1] For additional conductor protection, the specified fuses of type 3NA3... can be used.

[2] For device protection, only fuses of type 3NE1… can be used. These must be placed as close as possible to the converter.

[3] To achieve a UL-approved system, it is absolutely essential to use the fuse types specified in the table.

[4] When using fuses connected in parallel in each phase, if one fuse ruptures, then all of the fuses must be replaced.

© Siemens 2024

Selection and ordering data

Power components for the pre-charging circuit of the Active Line Modules or Active Interface Modules in chassis-2 format

Rated power at 400 V or 690 V	Rated input current	Suitable for Active Line Module	**Pre-charging resistors**		**Pre-charging contactor**	**Cable protection fuse for pre-charging arm**		**Main contactor/ Circuit breaker**
			Pre-charging current [1]			Rated current		
kW	A	6SL3331-...	A	Article No.	Type	A	Article No.	Article No.
Line voltage 380 ... 480 V 3 AC								
355	560	7TE35-6AA0	91 [2] 182 [3] 274 [4]	**6SL3000-0KE12-2AA0**	**3RT2027-... [2]** **3RT2037-... [3] [4]**	50 100	**3NE1817-0 [2]** **3NE1021-0 [3] [4]**	**3RT1466-6AP36** (3 units)
400	635	7TE36-4AA0						**3RT1466-6AP36** (3 units)
450	745	7TE37-5AA0						**3WA1220-4AE03-4EQ0-Z** **B10**
500	840	7TE38-4AA0						**3WA1220-4AE03-4EQ0-Z** **B10**
560	900	1TE38-8AA0						**3WA1220-4AE03-4EQ0-Z** **B10**
630	985	1TE41-0AA0						**3WA1220-4AE03-4EQ0-Z** **B12**
710	1110	1TE41-2AA0						**3WA1220-4AE03-4EQ0-Z** **B12**
800	1260	1TE41-3AA0						**3WA1220-4AE03-4EQ0-Z** **B16**
900	1405	1TE41-4AA0						**3WA1220-4AE03-4EQ0-Z** **B16**

Note:
The dimension drawings of the pre-charging resistors are to be found in the dimension drawing collection for Catalog D 21.3 in the Siemens Industry Online Support (SIOS).

[1] Line current present at the start of the pre-charging process (initial rms value).
[2] With one pre-charging resistor per phase.
[3] With two pre-charging resistors per phase.
[4] With three pre-charging resistors per phase.

© Siemens 2024

Overview

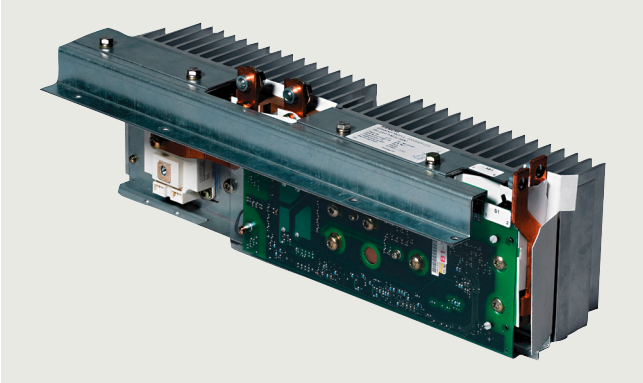

A Braking Module and the matching external braking resistor are required to bring drives to a controlled standstill in the event of a power failure (e.g. with an EMERGENCY STOP) or to limit the DC link voltage for brief periods of regenerative operation, e.g. if the Line Module is not capable of energy recovery.

The Braking Module includes the power electronics and the associated control circuit. During operation, the DC link energy is converted to heat loss in an external braking resistor.

The Braking Module works independently of the converter control.

Several Braking Modules can be operated in parallel, but a separate braking resistor must be connected to each Braking Module.

Braking Modules are designed to be integrated into air-cooled Motor Modules, Line Modules or Power Modules and are cooled by the fans on these modules. The supply voltage for the electronics is taken from the DC link. The Braking Modules are connected to the DC link by means of the busbar sets included in the scope of supply or flexible cables and, in the case of Basic Line Modules of frame size GB or GD, using a separate cable harness set.

The activation threshold of the Braking Module can be adjusted by means of a DIP switch. The braking power values specified in the technical specifications apply to the upper activation threshold.

Note:

The Braking Modules are not intended for installation in a Line Module or Motor Module in chassis-2 format.

Design

The Braking Modules have the following interfaces as standard:

- 1 DC link connection
- 1 braking resistor connection
- 1 digital input (inhibit Braking Module / acknowledge error)
- 1 digital output (Braking Module inhibited)
- 1 DIP switch for adjusting the activation threshold

Information about Braking Module activation thresholds and other notes are included in the SINAMICS Low Voltage Engineering Manual.

Selection and ordering data

Rated power P_{DB} kW	Peak power P_{15} kW	Frame size	**Braking Module** Article No.
Line voltage 380 ... 480 V 3 AC DC link voltage 510 ... 720 V DC			
25	125	FX/FB	**6SL3300-1AE31-3AA0**
50	250	GX/GB/GD	**6SL3300-1AE32-5AA0**
50	250	HX/JX	**6SL3300-1AE32-5BA0**
Line voltage 500 ... 600 V 3 AC DC link voltage 675 ... 900 V DC			
25	125	FX/FB	**6SL3300-1AF31-3AA0**
50	250	GX/GB/GD	**6SL3300-1AF32-5AA0**
50	250	HX/JX	**6SL3300-1AF32-5BA0**
Line voltage 660 ... 690 V 3 AC DC link voltage 890 ... 1035 V DC			
25	125	FX/FB	**6SL3300-1AH31-3AA0**
50	250	GX/GB/GD	**6SL3300-1AH32-5AA0**
50	250	HX/JX	**6SL3300-1AH32-5BA0**

Description	Article No.
Accessories	
Cable harness set for mounting a Braking Module of frame size GX into a Basic Line Module of frame size GB or GD	**6SL3366-2NG00-0AA0**

© Siemens 2024

Integration

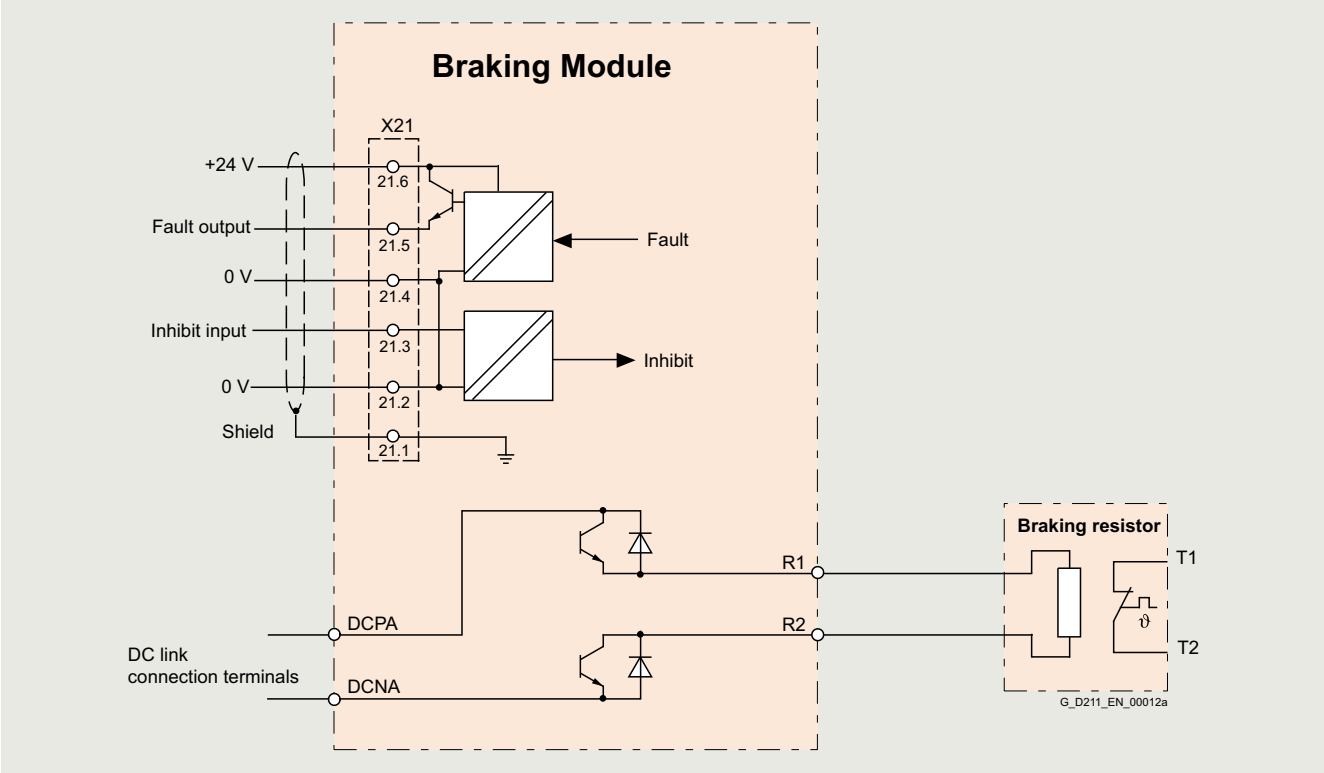

Connection example of a Braking Module

Characteristic curves

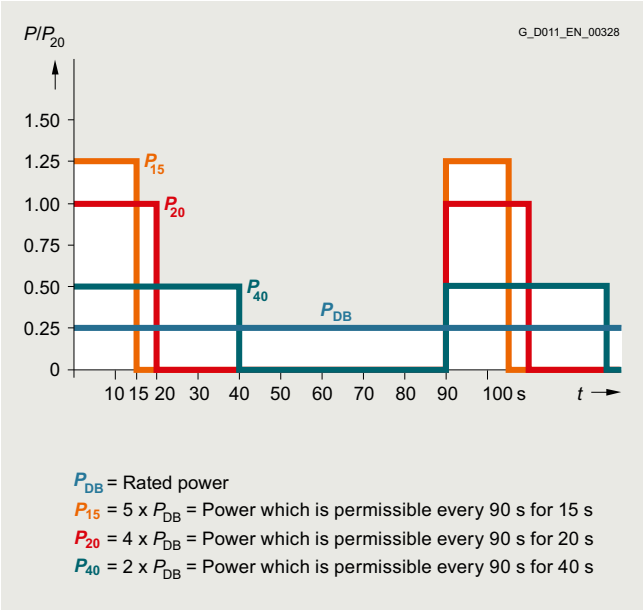

Load diagram for Braking Modules and braking resistor

© Siemens 2024

Technical specifications

Line voltage 380 ... 480 V 3 AC DC link voltage 510 ... 720 V DC		Braking Module		
		6SL3300-1AE31-3AA0	6SL3300-1AE32-5AA0	6SL3300-1AE32-5BA0
Power				
• Rated power P_{DB}	kW	25	50	50
• Peak power P_{15}	kW	125	250	250
• Power P_{20}	kW	100	200	200
• Power P_{40}	kW	50	100	100
Activation thresholds (adjustable via DIP switch)	V	774 (factory setting) or 673	774 (factory setting) or 673	774 (factory setting) or 673
Digital inputs in accordance with IEC 61131-2 Type 1				
• Voltage	V	24 DC	24 DC	24 DC
• Low level (an open digital input is interpreted as "low")	V	-3 ... +5	-3 ... +5	-3 ... +5
• High level	V	15 ... 30	15 ... 30	15 ... 30
• Current consumption at 24 V DC, typ.	mA	10	10	10
• Conductor cross-section, max.	mm^2	1.5	1.5	1.5
Digital outputs (continuously short-circuit proof)				
• Voltage	V	24 DC	24 DC	24 DC
• Load current per digital output, max.	mA	500	500	500
• Conductor cross-section, max.	mm^2	1.5	1.5	1.5
R1/R2 connection		M8 nut	M8 nut	M8 nut
• Conductor cross-section, max.	mm^2	35	50	50
Weight, approx.	kg (lb)	3.6 (7.94)	7.3 (16.1)	7.5 (16.5)
Suitable for installation in air-cooled Power Modules, Line Modules or Motor Modules				
• Air-cooled	Frame size	FX/FB	GX/GB/GD [1]	HX/JX

Line voltage 500 ... 600 V 3 AC DC link voltage 675 ... 900 V DC		Braking Module		
		6SL3300-1AF31-3AA0	6SL3300-1AF32-5AA0	6SL3300-1AF32-5BA0
Power				
• Rated power P_{DB}	kW	25	50	50
• Peak power P_{15}	kW	125	250	250
• Power P_{20}	kW	100	200	200
• Power P_{40}	kW	50	100	100
Activation thresholds (adjustable via DIP switch)	V	967 (factory setting) or 841	967 (factory setting) or 841	967 (factory setting) or 841
Digital inputs in accordance with IEC 61131-2 Type 1				
• Voltage	V	24 DC	24 DC	24 DC
• Low level (an open digital input is interpreted as "low")	V	-3 ... +5	-3 ... +5	-3 ... +5
• High level	V	15 ... 30	15 ... 30	15 ... 30
• Current consumption at 24 V DC, typ.	mA	10	10	10
• Conductor cross-section, max.	mm^2	1.5	1.5	1.5
Digital outputs (continuously short-circuit proof)				
• Voltage	V	24 DC	24 DC	24 DC
• Load current per digital output, max.	mA	500	500	500
• Conductor cross-section, max.	mm^2	1.5	1.5	1.5
R1/R2 connection		M8 nut	M8 nut	M8 nut
• Conductor cross-section, max.	mm^2	35	50	50
Weight, approx.	kg (lb)	3.6 (7.94)	7.3 (16.1)	7.5 (16.5)
Suitable for installation in air-cooled Power Modules, Line Modules or Motor Modules				
• Air-cooled	Frame size	FX/FB	GX/GB/GD [1]	HX/JX

[1] Cable harness set 6SL3366-2NG00-0AA0 is required to connect the Braking Module to a Basic Line Module of frame size GB or GD.

© Siemens 2024

Technical specifications

Line voltage 660 ... 690 V 3 AC DC link voltage 890 ... 1035 V DC		Braking Module		
		6SL3300-1AH31-3AA0	6SL3300-1AH32-5AA0	6SL3300-1AH32-5BA0
Power				
• Rated power P_{DB}	kW	25	50	50
• Peak power P_{15}	kW	125	250	250
• Power P_{20}	kW	100	200	200
• Power P_{40}	kW	50	100	100
Activation thresholds (adjustable via DIP switch)	V	967 (factory setting) or 841	1158 (factory setting) or 1070	1158 (factory setting) or 1070
Digital inputs in accordance with IEC 61131-2 Type 1				
• Voltage	V	24 DC	24 DC	24 DC
• Low level (an open digital input is interpreted as "low")	V	-3 ... +5	-3 ... +5	-3 ... +5
• High level	V	15 ... 30	15 ... 30	15 ... 30
• Current consumption at 24 V DC, typ.	mA	10	10	10
• Conductor cross-section, max.	mm^2	1.5	1.5	1.5
Digital outputs (continuously short-circuit proof)				
• Voltage	V	24 DC	24 DC	24 DC
• Load current per digital output, max.	mA	500	500	500
• Conductor cross-section, max.	mm^2	1.5	1.5	1.5
R1/R2 connection		M8 nut	M8 nut	M8 nut
• Conductor cross-section, max.	mm^2	35	50	50
Weight, approx.	kg (lb)	3.6 (7.94)	7.3 (16.1)	7.5 (16.5)
Suitable for installation in air-cooled Power Modules, Line Modules or Motor Modules				
• Air-cooled	Frame size	FX/FB	GX/GB/GD [1]	HX/JX

[1] Cable harness set 6SL3366-2NG00-0AA0 is required to connect the Braking Module to a Basic Line Module of frame size GB or GD.

© Siemens 2024

Overview

Excess energy in the DC link is dissipated via the braking resistor.

The braking resistor is connected to a Braking Module.

By positioning the braking resistor outside the cabinet or switchgear room, it is possible to extract the heat losses away from the Line Modules / Motor Modules. This reduces the level of air conditioning required.

The maximum permissible cable length between the Braking Module and braking resistor is 100 m.

Two braking resistors with different rated and peak power values are available for the devices.

The braking resistor is monitored on the basis of the duty cycle. A temperature switch (NC contact) is also fitted. This responds when the maximum permissible temperature is exceeded and can be evaluated by a controller.

Information about possible load cycles of the braking resistors and other notes are included in the SINAMICS Low Voltage Engineering Manual.

Selection and ordering data

Rated power P_{DB}	Suitable for Braking Module	**Braking resistor**
kW	6SL3300-...	Article No.
Line voltage 380 ... 480 V 3 AC DC link voltage 510 ... 720 V DC		
25	1AE31-3AA0	**6SL3000-1BE31-3AA0**
50	1AE32-5 . A0	**6SL3000-1BE32-5AA0**
Line voltage 500 ... 600 V 3 AC DC link voltage 675 ... 900 V DC		
25	1AF31-3AA0	**6SL3000-1BF31-3AA0**
50	1AF32-5 . A0	**6SL3000-1BF32-5AA0**
Line voltage 660 ... 690 V 3 AC DC link voltage 890 ... 1035 V DC		
25	1AH31-3AA0	**6SL3000-1BH31-3AA0**
50	1AH32-5 . A0	**6SL3000-1BH32-5AA0**

Characteristic curves

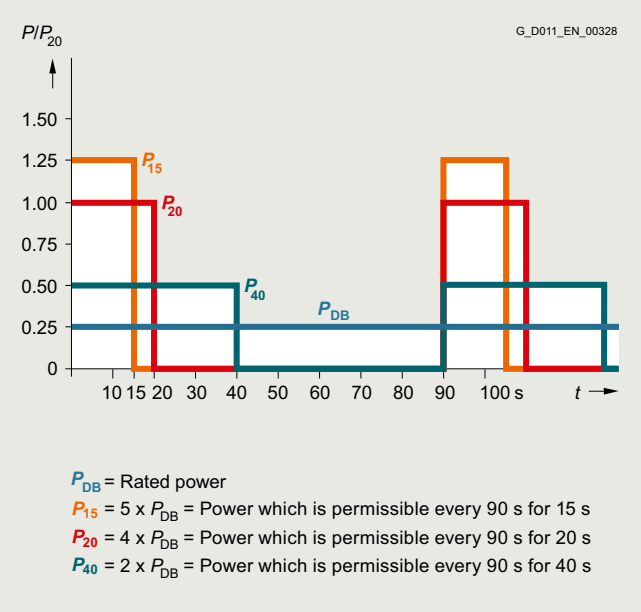

Load diagram for Braking Modules and braking resistors

© Siemens 2024

Technical specifications

Line voltage 380 ... 480 V 3 AC DC link voltage 510 ... 720 V DC		Braking resistor	
		6SL3000-1BE31-3AA0	6SL3000-1BE32-5AA0
Resistance	Ω	4.4 (±7.5 %)	2.2 (±7.5 %)
Rated power P_{DB} (continuous braking power)	kW	25	50
Power P_{15}	kW	125	250
Power P_{20}	kW	100	200
Power P_{40}	kW	50	100
Current, max.	A	189	378
Power connection • Conductor cross-section, max. (IEC)	 mm^2	M10 stud 50	M10 stud 70
Degree of protection		IP20	IP20
Dimensions • Width • Height • Depth	 mm (in) mm (in) mm (in)	 740 (29.1) 605 (23.8) 486 (19.1)	 810 (31.9) 1325 (52.2) 486 (19.1)
Weight, approx.	kg (lb)	50 (110)	120 (265)
Suitable for Braking Module	Type	6SL3300-1AE31-3AA0	6SL3300-1AE32-5 . A0

Line voltage 500 ... 600 V 3 AC DC link voltage 675 ... 900 V DC		Braking resistor	
		6SL3000-1BF31-3AA0	6SL3000-1BF32-5AA0
Resistance	Ω	6.8 (±7.5 %)	3.4 (±7.5 %)
Rated power P_{DB} (continuous braking power)	kW	25	50
Power P_{15}	kW	125	250
Power P_{20}	kW	100	200
Power P_{40}	kW	50	100
Current, max.	A	189	378
Power connection • Conductor cross-section, max. (IEC)	 mm^2	M10 stud 50	M10 stud 70
Degree of protection		IP20	IP20
Dimensions • Width • Height • Depth	 mm (in) mm (in) mm (in)	 740 (29.1) 605 (23.8) 486 (19.1)	 810 (31.9) 1325 (52.2) 486 (19.1)
Weight, approx.	kg (lb)	50 (110)	120 (265)
Suitable for Braking Module	Type	6SL3300-1AF31-3AA0	6SL3300-1AF32-5 . A0

Line voltage 660 ... 690 V 3 AC DC link voltage 890 ... 1035 V DC		Braking resistor	
		6SL3000-1BH31-3AA0	6SL3000-1BH32-5AA0
Resistance	Ω	9.8 (±7.5 %)	4.9 (±7.5 %)
Rated power P_{DB} (continuous braking power)	kW	25	50
Power P_{15}	kW	125	250
Power P_{20}	kW	100	200
Power P_{40}	kW	50	100
Current, max.	A	125	255
Power connection • Conductor cross-section, max. (IEC)	 mm^2	M10 stud 50	M10 stud 70
Degree of protection		IP20	IP20
Dimensions • Width • Height • Depth	 mm (in) mm (in) mm (in)	 740 (29.1) 605 (23.8) 486 (19.1)	 810 (31.9) 1325 (52.2) 486 (19.1)
Weight, approx.	kg (lb)	50 (110)	120 (265)
Suitable for Braking Module	Type	6SL3300-1AH31-3AA0	6SL3300-1AH32-5 . A0

© Siemens 2024

Selection and ordering data

Suitable DC link fuses are assigned depending on the power rating of the Motor Modules.

Further information about the fuses listed is provided in the Catalogs IC 10 and LV 10.

Assignment of the DC link fuses to the Motor Modules in chassis format, liquid-cooled

Type rating at 400 V	Rated DC link current for power supplied via Basic Line Module / Active Line Module	Suitable for Motor Module in chassis format	DC link fuse according to IEC				DC link fuse according to UL [1]			
			Rated current	Quantity / Phase	Frame size		Rated current	Quantity / Phase	Frame size	
kW	A	6SL3325-...	A			Article No.	A			Article No.
Line voltage 380 ... 480 V 3 AC										
110	256/230	1TE32-1AA3	315	1	1	**3NE3230-0B**	315	1	1	**3NE3230-0B**
							315	1	2L	**3NB1231-4KK11**
132	317/287	1TE32-6AA3	400	1	1	**3NE3232-0B**	400	1	1	**3NE3232-0B**
							400	1	2L	**3NB1234-4KK11**
160	380/340	1TE33-1AA3	450	1	1	**3NE3233**	450	1	1	**3NE3233**
							500	1	3L	**3NB1337-4KK11**
250	600/538	1TE35-0AA3	630	1	2	**3NE3236**	630	1	2	**3NE3236**
							800	1	3L	**3NB1345-4KK11**
315	738/664	1TE36-1AA3	800	1	2	**3NE3338-8**	800	1	2	**3NE3338-8**
							800	1	3L	**3NB2345-4KK16**
400	894/805	1TE37-5AA3	500	2[3]	2	**3NE3334-0B**	1000	1	3L	**3NB2350-4KK16**
450	1025/922	1TE38-4AA3	560	2[3]	2	**3NE3335**	560	2[3]	2	**3NE3335**
							1000	1	3L	**3NB2350-4KK16**
560	1202/1080	1TE41-0AA3	630	2[3]	2	**3NE3336**	630	2[3]	2	**3NE3336**
							1400	1	3L	**3NB2355-4KK16**
710	1512/1361	1TE41-2AA3	900	2[3]	2	**3NE3340-8**	2100	1	3L	**3NB2364-4KK17**
800	1714/1544	1TE41-4AA3	900	2[3]	2	**3NE3340-8**	900	2[3]	2	**3NE3340-8**
							2100	1	3L	**3NB2364-4KK17**
800	1550/1403	1TE41-4AS3 [2]	900	2[3]	2	**3NE3340-8**	2100	1	3L	**3NB2364-4KK17**

[1] To achieve a UL-approved system, it is absolutely essential to use the fuse types specified in the table.

[2] This Motor Module has been specifically designed for loads demanding a high dynamic performance.

[3] When using fuses connected in parallel in each phase, if one fuse ruptures, then all of the fuses must be replaced.

© Siemens 2024

Selection and ordering data

Type rating at 690 V	Rated DC link current for power supplied via Basic Line Module / Active Line Module	Suitable for Motor Module in chassis format	DC link fuse according to IEC				DC link fuse according to UL [1]			
			Rated current	Quantity / Phase	Frame size		Rated current	Quantity / Phase	Frame size	
kW	A	6SL3325-...	A			Article No.	A			Article No.
Line voltage 500 ... 690 V 3 AC										
90	122/110	1TG31-0AA3	160	1	1	**3NE3224**	160	1	1	**3NE3224**
							200	1	1L	**3NB1126-4KK11**
132	183/165	1TG31-5AA3	200	1	1	**3NE3225**	200	1	1	**3NE3225**
							250	1	1L	**3NB1128-4KK11**
200	263/237	1TG32-2AA3	315	1	1	**3NE3230-0B**	315	1	1	**3NE3230-0B**
							315	1	2L	**3NB1231-4KK11**
315	403/363	1TG33-3AA3	450	1	2	**3NE3233**	450	1	2	**3NE3233**
							500	1	3L	**3NB1337-4KK11**
450	558/502	1TG34-7AA3	630	1	2	**3NE3336**	800	1	3L	**3NB1345-4KK11**
560	702/632	1TG35-8AA3	400	2 [3]	1	**3NE3232-0B**	400	2 [3]	1	**3NE3232-0B**
							800	1	3L	**3NB2345-4KK16**
710	903/759	1TG37-4AA3	560	2 [3]	2	**3NE3335**	1000	1	3L	**3NB2350-4KK16**
800	990/891	1TG38-0AA3 [2]	560	2 [3]	2	**3NE3335**	1000	1	3L	**3NB2350-4KK16**
800	990/891	1TG38-1AA3	560	2 [3]	2	**3NE3335**	560	2 [3]	2	**3NE3335**
							1000	1	3L	**3NB2350-4KK16**
1000	1250/1125	1TG41-0AA3	710	2 [3]	2	**3NE3337-8**	710	2 [3]	2	**3NE3337-8**
							1600	1	3L	**3NB2357-4KK16**
1200	1550/1395	1TG41-3AA3	900	2 [3]	2	**3NE3340-8**	900	2 [3]	2	**3NE3340-8**
							2100	1	3L	**3NB2364-4KK17**
1500	1903/1605	1TG41-6AA3	710	3 [3]	2	**3NE3337-8**	2400	1	3L	**3NB2366-4KK17**

Assignment of the DC link fuses to the Active Line Modules in chassis format, liquid-cooled

The DC connections of the liquid-cooled Active Line Modules are not equipped with fuses as standard. Fuse protection is not mandatory here, but it is recommended for parallel connections of Active Line Modules. In this case the DC connections can be protected by externally mounted fuses. Recommended fuses are listed in the SINAMICS Low Voltage Engineering Manual.

[1] To achieve a UL-approved system, it is absolutely essential to use the fuse types specified in the table.

[2] Device 6SL3325-1TG38-0AA3 is optimized for a base pulse frequency of 1.25 kHz, for an increased pulse frequency or with certain overloads, the derating factor is higher than for the device 6SL3325-1TG38-1AA3.

[3] When using fuses connected in parallel in each phase, if one fuse ruptures, then all of the fuses must be replaced.

© Siemens 2024

Selection and ordering data

Assignment of the DC link fuses to the Motor Modules in chassis-2 format, air-cooled

Type rating at 400 V	Rated DC link current	Suitable for Motor Module in chassis-2 format	DC link fuse according to IEC				DC link fuse according to UL [1]			
			Rated current	Quantity / phase	Frame size		Rated current	Quantity / phase	Frame size	
kW	A	6SL3321-...	A			Article No.	A			Article No.
Line voltage 380 ... 480 V 3 AC										
315	785	1TE36–6AA0	500	2[2]	2	**3NE3334-0B**	1000	1	3L	**3NB2350-4KK16**
355	890	1TE37–4AA0	560	2[2]	2	**3NE3335**	1000	1	3L	**3NB2350-4KK16**
400	975	1TE38-1AA0	560	2[2]	2	**3NE3335**	1400	1	3L	**3NB2355-4KK16**
450	1090	1TE38-8AA0	630	2[2]	2	**3NE3336**	1400	1	3L	**3NB2355-4KK16**
500	1170	1TEA41-0AA0	630	2[2]	2	**3NE3336**	1400	1	3L	**3NB2355-4KK16**
560	1290	1TEA41-1AA0	710	2[2]	2	**3NE3337-8**	1400	1	3L	**3NB2355-4KK16**
630	1440	1TEA41-2AA0	800	2[2]	2	**3NE3338-8**	1600	1	3L	**3NB2357-4KK16**
710	1590	1TEA41-3AA0	1000	2[2]	3	**3NC3341-1U**	2100	1	3L	**3NB2364-4KK17**
800	1795	1TEA41-5AA0	1100	2[2]	3	**3NC3342-1U**	2100	1	3L	**3NB2364-4KK17**

Assignment of the DC link fuses to the Active Line Modules in chassis-2 format, air-cooled

Rated power at 400 V	Rated DC link current	Suitable for Active Line Modules in chassis-2 format	DC link fuse according to IEC				DC link fuse according to UL [1]			
			Rated current	Quantity / phase	Frame size		Rated current	Quantity / phase	Frame size	
kW	A	6SL3331-...	A			Article No.	A			Article No.
Line voltage 380 ... 480 V 3 AC										
355	630	7TE35-6AA0	450	2[2]	2	**3NE3333**	1000	1	3L	**3NB2350-4KK16**
400	710	7TE36-4AA0	500	2[2]	2	**3NE3334-0B**	1000	1	3L	**3NB2350-4KK16**
450	835	7TE37-5AA0	560	2[2]	2	**3NE3335**	1400	1	3L	**3NB2355-4KK16**
500	940	7TE38-4AA0	630	2[2]	2	**3NE3336**	1400	1	3L	**3NB2355-4KK16**
530	1010	7TE38-8AA0	710	2[2]	2	**3NE3337-8**	1400	1	3L	**3NB2355-4KK16**
630	1110	7TE41-0AA0	800	2[2]	2	**3NE3338-8**	1400	1	3L	**3NB2355-4KK16**
710	1245	7TE41-2AA0	800	2[2]	2	**3NE3338-8**	1600	1	3L	**3NB2357-4KK16**
800	1415	7TE41-3AA0	800	2[2]	2	**3NE3338-8**	1600	1	3L	**3NB2357-4KK16**
900	1575	7TE41-4AA0	1000	2[2]	3	**3NC3341-1U**	1600	1	3L	**3NB2357-4KK16**

[1] To achieve a UL-approved system, it is absolutely essential to use the fuse types specified in the table.

[2] When using fuses connected in parallel in each phase, if one fuse ruptures, then all of the fuses must be replaced.

© Siemens 2024

Overview

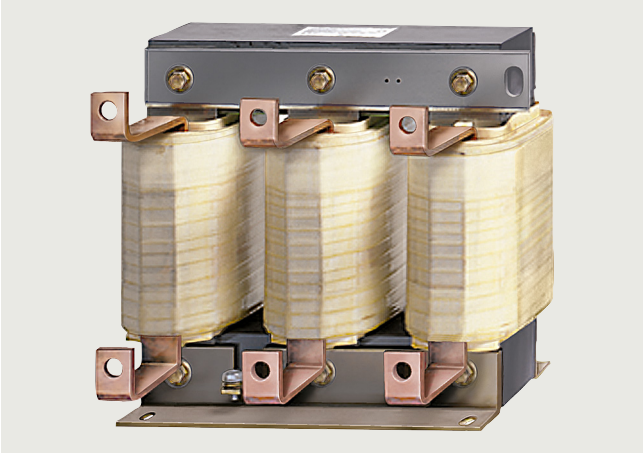

Motor reactors reduce the voltage load on the motor windings by reducing the voltage gradients at the motor terminals that occur during converter operation. At the same time, the capacitive charge/discharge currents that place an additional load on the converter output when using long motor cables, are reduced. For group drives, output reactors should always be used. The maximum permissible output frequency when a motor reactor is used is 150 Hz.

The motor reactor must be installed as close as possible to the Motor Module or Power Module. Up to two motor reactors can be connected in series.

Motor reactors are approved for use only in conjunction with Vector and V/f control modes.

For additional notes on the use of motor reactors, please refer to the SINAMICS Low Voltage Engineering Manual.

Selection and ordering data

Motor reactors for Power Modules and Motor Modules in chassis format

Suitable for Power Module		Suitable for Motor Module		Type rating at 400 V	Rated output current	**Motor reactor**
Air-cooled	Liquid-cooled	Air-cooled	Liquid-cooled	kW	A	Article No.
Line voltage 380 ... 480 V 3 AC						
6SL3310-1TE32-1AA3	6SL3315-1TE32-1AA3	6SL3320-1TE32-1AA3	6SL3325-1TE32-1AA3	110	210	**6SL3000-2BE32-1AA0**
6SL3310-1TE32-6AA3	6SL3315-1TE32-6AA3	6SL3320-1TE32-6AA3	6SL3325-1TE32-6AA3	132	260	**6SL3000-2BE32-6AA0**
6SL3310-1TE33-1AA3	6SL3315-1TE33-1AA3	6SL3320-1TE33-1AA3	6SL3325-1TE33-1AA3	160	310	**6SL3000-2BE33-2AA0**
6SL3310-1TE33-8AA3	–	6SL3320-1TE33-8AA3	–	200	380	**6SL3000-2BE33-8AA0**
6SL3310-1TE35-0AA3	6SL3315-1TE35-0AA3	6SL3320-1TE35-0AA3	6SL3325-1TE35-0AA3	250	490	**6SL3000-2BE35-0AA0**
–	–	6SL3320-1TE36-1AA3	6SL3325-1TE36-1AA3	315	605	**6SL3000-2AE36-1AA0**
–	–	6SL3320-1TE37-5AA3	6SL3325-1TE37-5AA3	400	745	**6SL3000-2AE38-4AA0**
–	–	6SL3320-1TE38-4AA3	6SL3325-1TE38-4AA3	450	840	
–	–	6SL3320-1TE41-0AA3	6SL3325-1TE41-0AA3	560	985	**6SL3000-2AE41-0AA0**
–	–	6SL3320-1TE41-2AA3	6SL3325-1TE41-2AA3	710	1260	**6SL3000-2AE41-4AA0**
–	–	6SL3320-1TE41-4AA3	6SL3325-1TE41-4AA3	800	1405	
			6SL3325-1TE41-4AS3 [1]	800	1330	

[1] This Motor Module has been specifically designed for loads demanding a high dynamic performance.

© Siemens 2024

Selection and ordering data

Suitable for Power Module		Suitable for Motor Module		Type rating at 690 V	Rated output current	**Motor reactor**
Air-cooled	Liquid-cooled	Air-cooled	Liquid-cooled	kW	A	Article No.
Line voltage 500 ... 690 V 3 AC						
–	–	6SL3320-1TG28-5AA3	–	75	85	**6SL3000-2AH31-0AA0**
–	–	6SL3320-1TG31-0AA3	6SL3325-1TG31-0AA3	90	100	
–	–	6SL3320-1TG31-2AA3	–	110	120	**6SL3000-2AH31-5AA0**
–	–	6SL3320-1TG31-5AA3	6SL3325-1TG31-5AA3	132	150	
–	–	6SL3320-1TG31-8AA3	–	160	175	**6SL3000-2AH31-8AA0**
–	–	6SL3320-1TG32-2AA3	6SL3325-1TG32-2AA3	200	215	**6SL3000-2AH32-4AA0**
–	–	6SL3320-1TG32-6AA3	–	250	260	**6SL3000-2AH32-6AA0**
–	–	6SL3320-1TG33-3AA3	6SL3325-1TG33-3AA3	315	330	**6SL3000-2AH33-6AA0**
–	–	6SL3320-1TG34-1AA3	–	400	410	**6SL3000-2AH34-5AA0**
–	–	6SL3320-1TG34-7AA3	6SL3325-1TG34-7AA3	450	465	**6SL3000-2AH34-7AA0**
–	–	6SL3320-1TG35-8AA3	6SL3325-1TG35-8AA3	560	575	**6SL3000-2AH35-8AA0**
–	–	6SL3320-1TG37-4AA3	6SL3325-1TG37-4AA3	710	735	**6SL3000-2AH38-1AA0**
–	–	6SL3320-1TG38-1AA3	6SL3325-1TG38-0AA3 6SL3325-1TG38-1AA3	800	810	
–	–	6SL3320-1TG38-8AA3	–	900	910	**6SL3000-2AH41-0AA0**
–	–	6SL3320-1TG41-0AA3	6SL3325-1TG41-0AA3	1000	1025	**6SL3000-2AH41-1AA0**
–	–	6SL3320-1TG41-3AA3	6SL3325-1TG41-3AA3	1200	1270	**6SL3000-2AH41-3AA0**

Motor reactors for Motor Modules in chassis-2 format

Suitable for Motor Module in chassis-2 format	Type rating at 400 V	Rated output current	**Motor reactor**
Air-cooled	kW	A	Article No.
Line voltage 380 ... 480 V 3 AC			
6SL3321-1TE36-6AA0	315	655	**6SL3000-2AE38-4AA0**
6SL3321-1TE37-4AA0	355	740	**6SL3000-2AE38-4AA0**
6SL3321-1TE38-1AA0	400	810	**6SL3000-2AE38-4AA0**
6SL3321-1TE38-8AA0	450	910	**6SL3000-2AE41-4AA0**
6SL3321-1TE41-0AA0	500	975	**6SL3000-2DE41-4DA0**
6SL3321-1TE41-1AA0	560	1075	**6SL3000-2DE41-4DA0**
6SL3321-1TE41-2AA0	630	1200	**6SL3000-2DE41-4DA0**
6SL3321-1TE41-3AA0	710	1325	**6SL3000-2DE41-4DA0**
6SL3321-1TE41-5AA0	800	1495	**6SL3000-2DE41-4DA0**

© Siemens 2024

Technical specifications

Line voltage 380 ... 480 V 3 AC		Motor reactor (for pulse frequencies of 2 kHz to 4 kHz)									
		6SL3000-2BE32-1AA0		6SL3000-2BE32-6AA0		6SL3000-2BE33-2AA0		6SL3000-2BE33-8AA0		6SL3000-2BE35-0AA0	
Rated current	A	210		260		310		380		490	
Power loss, max. [1]	kW	0.486		0.5		0.47		0.5		0.5	
Load connection		1 × hole for M10		1 × hole for M10		1 × hole for M10		1 × hole for M10		1 × hole for M12	
PE connection		M8 screw		M8 screw		M8 screw		M8 screw		M8 screw	
Cable length, max. between motor reactor and motor											
(number of reactors in series)		(1)	(2)	(1)	(2)	(1)	(2)	(1)	(2)	(1)	(2)
• Shielded	m (ft)	300 (984)	525 (1722)	300 (984)	525 (1722)	300 (984)	525 (1722)	300 (984)	525 (1722)	300 (984)	525 (1722)
• Unshielded	m (ft)	450 (1476)	787 (2582)	450 (1476)	787 (2582)	450 (1476)	787 (2582)	450 (1476)	787 (2582)	450 (1476)	787 (2582)
Degree of protection		IP00		IP00		IP00		IP00		IP00	
Dimensions											
• Width	mm (in)	300 (11.8)		300 (11.8)		300 (11.8)		300 (11.8)		300 (11.8)	
• Height	mm (in)	285 (11.2)		315 (12.4)		285 (11.2)		285 (11.2)		365 (14.4)	
• Depth	mm (in)	257 (10.1)		277 (10.9)		257 (10.1)		277 (10.9)		277 (10.9)	
Weight, approx.	kg (lb)	66 (146)		66 (146)		66 (146)		73 (161)		100 (220)	
Suitable for Power Module		6SL3310-1TE32-1AA3 6SL3315-1TE32-1AA3		6SL3310-1TE32-6AA3 6SL3315-1TE32-6AA3		6SL3310-1TE33-1AA3 6SL3315-1TE33-1AA3		6SL3310-1TE33-8AA3		6SL3310-1TE35-0AA3 6SL3315-1TE35-0AA3	
Suitable for Motor Module		6SL3320-1TE32-1AA3 6SL3325-1TE32-1AA3		6SL3320-1TE32-6AA3 6SL3325-1TE32-6AA3		6SL3320-1TE33-1AA3 6SL3325-1TE33-1AA3		6SL3320-1TE33-8AA3		6SL3320-1TE35-0AA3 6SL3325-1TE35-0AA3	
• Rated output current of Motor Module	A	210		260		310		380		490	

Line voltage 380 ... 480 V 3 AC		Motor reactor (for pulse frequencies of 1.25 kHz to 2.5 kHz)											
		6SL3000-2AE36-1AA0		6SL3000-2AE38-4AA0				6SL3000-2AE41-0AA0		6SL3000-2AE41-4AA0			
Rated current	A	605		745		840		985		1260		1405	
Power loss, max. [1]	kW	0.9		0.84		0.943		1.062		0.9		1.054	
Load connection		1 × hole for M12		1 × hole for M12		1 × hole for M12		1 × hole for M12		2 × hole for M12		2 × hole for M12	
PE connection		M10 screw		M10 screw		M10 screw		M10 screw		M10 screw		M10 screw	
Cable length, max. between motor reactor and motor													
(number of reactors in series)		(1)	(2)	(1)	(2)	(1)	(2)	(1)	(2)	(1)	(2)	(1)	(2)
• Shielded	m (ft)	300 (984)	525 (1722)	300 (984)	525 (1722)	300 (984)	525 (1722)	300 (984)	525 (1722)	300 (984)	525 (1722)	300 (984)	525 (1722)
• Unshielded	m (ft)	450 (1476)	787 (2582)	450 (1476)	787 (2582)	450 (1476)	787 (2582)	450 (1476)	787 (2582)	450 (1476)	787 (2582)	450 (1476)	787 (2582)
Degree of protection		IP00		IP00		IP00		IP00		IP00		IP00	
Dimensions													
• Width	mm (in)	410 (16.1)		410 (16.1)		410 (16.1)		410 (16.1)		460 (18.1)		460 (18.1)	
• Height	mm (in)	392 (15.4)		392 (15.4)		392 (15.4)		392 (15.4)		392 (15.4)		392 (15.4)	
• Depth	mm (in)	292 (11.5)		292 (11.5)		292 (11.5)		302 (11.9)		326 (12.8)		326 (12.8)	
Weight, approx.	kg (lb)	130 (287)		140 (309)		140 (309)		146 (322)		179 (395)		179 (395)	
Suitable for Motor Module		6SL3320-1TE36-1AA3 6SL3325-1TE36-1AA3		6SL3320-1TE37-5AA3 6SL3325-1TE37-5AA3		6SL3320-1TE38-4AA3 6SL3325-1TE38-4AA3		6SL3320-1TE41-0AA3 6SL3325-1TE41-0AA3		6SL3320-1TE41-2AA3 6SL3325-1TE41-2AA3		6SL3320-1TE41-4AA3 6SL3325-1TE41-4AA3 6SL3325-1TE41-4AS3 [2]	
• Rated output current of the Motor Module	A	605		745		840		985		1260		1405	

[1] The specified power loss represents the maximum value at 100 % utilization. The value is lower under normal operating conditions.

[2] This Motor Module has been specifically designed for loads demanding a high dynamic performance.

© Siemens 2024

Technical specifications

Line voltage 380 ... 480 V 3 AC		Motor reactor (for pulse frequencies 2.5 kHz)									
		6SL3000-2AE38-4AA0			6SL3000-2AE41-4AA0		6SL3000-2DE41-4DA0				
Rated current	A	840			1405		1405				
Power loss, max. [1]											
• At 50 Hz	kW	0.75			0.946		1.111				
• At 150 Hz	kW	0.84			1.054		1.23				
Load connection		M12			2 x M12		2 × M12				
PE connection		M10			M6		M6				
Cable length, max. between motor reactor and motor											
(number of reactors in series)		(1)	(2)		(1)	(2)	(1)	(2)			
• Shielded	m (ft)	300 (984)	450 (1476)		300 (984)	450 (1476)	300 (984)	450 (1476)			
• Unshielded	m (ft)	450 (1476)	675 (2215)		450 (1476)	675 (2215)	450 (1476)	675 (2215)			
Degree of protection		IP00			IP00		IP00				
Dimensions											
• Width	mm (in)	410 (16.1)			460 (18.1)		445 (17.5)				
• Height	mm (in)	392 (15.4)			392 (15.4)		385 (15.2)				
• Depth	mm (in)	292 (11.5)			326 (12.8)		312 (12.3)				
Weight, approx.	kg (lb)	140 (309)			179 (395)		158 (348)				
Suitable for Motor Module in chassis-2 format		6SL3321-1TE36-6AA0	6SL3321-1TE37-4AA0	6SL3321-1TE38-1AA0	6SL3321-1TE38-8AA0		6SL3321-1TE41-0AA0	6SL3321-1TE41-1AA0	6SL3321-1TE41-2AA0	6SL3321-1TE41-3AA0	6SL3321-1TE41-5AA0
• Rated output current of the Motor Module	A	655	740	810	910		975	1075	1200	1325	1495

Line voltage 500 ... 690 V 3 AC		Motor reactor (for pulse frequencies of 1.25 kHz to 2.5 kHz)											
		6SL3000-2AH31-0AA0				6SL3000-2AH31-5AA0				6SL3000-2AH31-8AA0		6SL3000-2AH32-4AA0	
Rated current	A	85		100		120		150		175		215	
Power loss, max. [1]	kW	0.257		0.3		0.318		0.335		0.4		0.425	
Load connection		Flat connector for M10 screw		Flat connector for M10 screw		Flat connector for M10 screw		Flat connector for M10 screw		Flat connector for M10 screw		Flat connector for M10 screw	
PE connection		M6 screw		M6 screw		M6 screw		M6 screw		M6 screw		M6 screw	
Cable length, max. between motor reactor and motor													
(number of reactors in series)		(1)	(2)	(1)	(2)	(1)	(2)	(1)	(2)	(1)	(2)	(1)	(2)
• Shielded	m (ft)	300 (984)	525 (1722)	300 (984)	525 (1722)	300 (984)	525 (1722)	300 (984)	525 (1722)	300 (984)	525 (1722)	300 (984)	525 (1722)
• Unshielded	m (ft)	450 (1476)	787 (2582)	450 (1476)	787 (2582)	450 (1476)	787 (2582)	450 (1476)	787 (2582)	450 (1476)	787 (2582)	450 (1476)	787 (2582)
Degree of protection		IP00		IP00		IP00		IP00		IP00		IP00	
Dimensions													
• Width	mm (in)	270 (10.6)		270 (10.6)		270 (10.6)		270 (10.6)		300 (11.8)		300 (11.8)	
• Height	mm (in)	248 (9.76)		248 (9.76)		248 (9.76)		248 (9.76)		285 (11.2)		285 (11.2)	
• Depth	mm (in)	200 (7.87)		200 (7.87)		200 (7.87)		200 (7.87)		212 (8.35)		212 (8.35)	
Weight, approx.	kg (lb)	25 (55.1)		25 (55.1)		25.8 (56.9)		25.8 (56.9)		34 (75.0)		34 (75.0)	
Suitable for Motor Module		6SL3320-1TG28-5AA3		6SL3320-1TG31-0AA3 6SL3325-1TG31-0AA3		6SL3320-1TG31-2AA3		6SL3320-1TG31-5AA3 6SL3325-1TG31-5AA3		6SL3320-1TG31-8AA3		6SL3320-1TG32-2AA3 6SL3325-1TG32-2AA3	
• Rated output current of the Motor Module	A	85		100		120		150		175		215	

[1] The specified power loss represents the maximum value at 100 % utilization. The value is lower under normal operating conditions.

© Siemens 2024

Technical specifications

Line voltage 500 ... 690 V 3 AC		Motor reactor (for pulse frequencies of 1.25 kHz to 2.5 kHz)											
		6SL3000-2AH32-6AA0		6SL3000-2AH33-6AA0		6SL3000-2AH34-5AA0		6SL3000-2AH34-7AA0		6SL3000-2AH35-8AA0		6SL3000-2AH38-1AA0	
Rated current	A	260		330		410		465		575		735	
Power loss, max. [1]	kW	0.44		0.45		0.545		0.72		0.8		0.96	
Load connection		Flat connector for M10 screw		Flat connector for M10 screw		Flat connector for M12 screw		Flat connector for M12 screw		Flat connector for M12 screw		Flat connector for M12 screw	
PE connection		M6 screw		M6 screw		M8 screw		M8 screw		M8 screw		M8 screw	
Cable length, max. between motor reactor and motor													
(number of reactors in series)		(1)	(2)	(1)	(2)	(1)	(2)	(1)	(2)	(1)	(2)	(1)	(2)
• Shielded	m (ft)	300 (984)	525 (1722)	300 (984)	525 (1722)	300 (984)	525 (1722)	300 (984)	525 (1722)	300 (984)	525 (1722)	300 (984)	525 (1722)
• Unshielded	m (ft)	450 (1476)	787 (2582)	450 (1476)	787 (2582)	450 (1476)	787 (2582)	450 (1476)	787 (2582)	450 (1476)	787 (2582)	450 (1476)	787 (2582)
Degree of protection		IP00		IP00		IP00		IP00		IP00		IP00	
Dimensions													
• Width	mm (in)	300 (11.8)		300 (11.8)		350 (13.8)		410 (16.1)		410 (16.1)		410 (16.1)	
• Height	mm (in)	285 (11.2)		285 (11.2)		330 (13.0)		392 (15.4)		392 (15.4)		392 (15.4)	
• Depth	mm (in)	212 (8.35)		212 (8.35)		215 (8.46)		292 (11.5)		292 (11.5)		279 (11.0)	
Weight, approx.	kg (lb)	40 (88.2)		46 (101)		68 (150)		80 (176)		80 (176)		146 (322)	
Suitable for Motor Module		6SL3320-1TG32-6AA3		6SL3320-1TG33-3AA3 6SL3325-1TG33-3AA3		6SL3320-1TG34-1AA3		6SL3320-1TG34-7AA3 6SL3325-1TG34-7AA3		6SL3320-1TG35-8AA3 6SL3325-1TG35-8AA3		6SL3320-1TG37-4AA3 6SL3325-1TG37-4AA3	
• Rated output current of the Motor Module	A	260		330		410		465		575		735	

Line voltage 500 ... 690 V 3 AC		Motor reactor (for pulse frequencies of 1.25 kHz to 2.5 kHz)							
		6SL3000-2AH38-1AA0		6SL3000-2AH41-0AA0		6SL3000-2AH41-1AA0		6SL3000-2AH41-3AA0	
Rated current	A	810		910		1025		1270	
Power loss, max. [1]	kW	1.0		0.97		1.05		0.95	
Load connection		Flat connector for M12 screw		Flat connector for M12 screw		Flat connector for M12 screw		Flat connector for M12 screw	
PE connection		M8 screw		M8 screw		M8 screw		M8 screw	
Cable length, max. between motor reactor and motor									
(number of reactors in series)		(1)	(2)	(1)	(2)	(1)	(2)	(1)	(2)
• Shielded	m (ft)	300 (984)	525 (1722)	300 (984)	525 (1722)	300 (984)	525 (1722)	300 (984)	525 (1722)
• Unshielded	m (ft)	450 (1476)	787 (2582)	450 (1476)	787 (2582)	450 (1476)	787 (2582)	450 (1476)	787 (2582)
Degree of protection		IP00		IP00		IP00		IP00	
Dimensions									
• Width	mm (in)	410 (16.1)		410 (16.1)		410 (16.1)		460 (18.1)	
• Height	mm (in)	392 (15.4)		392 (15.4)		392 (15.4)		392 (15.4)	
• Depth	mm (in)	279 (11.0)		279 (11.0)		317 (12.5)		296 (11.7)	
Weight, approx.	kg (lb)	146 (322)		150 (331)		163 (359)		153 (337)	
Suitable for Motor Module		6SL3320-1TG38-1AA3 6SL3325-1TG38-0AA3 6SL3325-1TG38-1AA3		6SL3320-1TG38-8AA3		6SL3320-1TG41-0AA3 6SL3325-1TG41-0AA3		6SL3320-1TG41-3AA3 6SL3325-1TG41-3AA3	
• Rated output current of the Motor Module	A	810		910		1025		1270	

[1] The specified power loss represents the maximum value at 100 % utilization. The value is lower under normal operating conditions.

© Siemens 2024

Overview

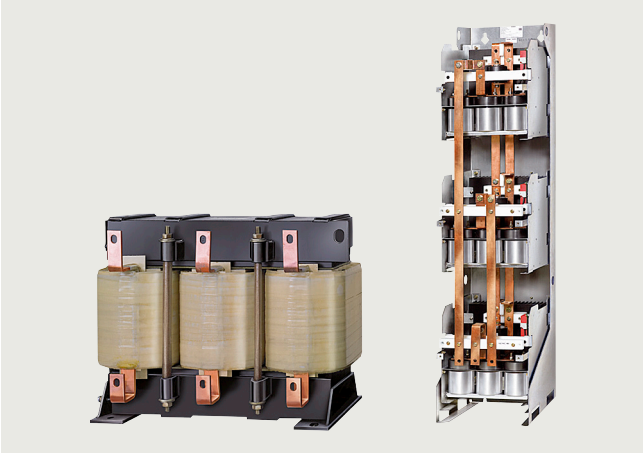

dv/dt filter plus VPL (**V**oltage **P**eak **L**imiter) limit the voltage rate of rise *dv/dt* to values < 500 V/µs and the typical peak voltage to the following values in accordance with the limit value curve according to IEC/TS 60034-17: 2006:

< 1000 V at U_{line} < 575 V

< 1250 V at 660 V < U_{line} < 690 V

Standard motors with standard insulation and without insulated bearings with a supply voltage of up to 690 V can be used for converter operation if a dv/dt filter plus VPL is used.

dv/dt filters plus VPL are designed for the following maximum motor cable lengths:

- Shielded cables: 300 m (e.g. Protodur NYCWY)
- Unshielded cables: 450 m (e.g. Protodur NYY)

For shorter cable lengths (100 m shielded, 150 m unshielded), see also dv/dt filter compact plus VPL.

Notice:
The maximum permissible cable length between the dv/dt filter plus VPL and the Power Module/Motor Module is 5 m.

Design

The dv/dt filter plus VPL consists of two components, which are also supplied as separate mechanical units:

- dv/dt reactor
- Voltage limiting network, which cuts off the voltage peaks and feeds the energy back to the DC link.

© Siemens 2024

Selection and ordering data

dv/dt filter plus VPL for Motor Modules in chassis format

Suitable for Power Module		Suitable for Motor Module		Type rating at 400 V/ 690 V	Rated output current	**dv/dt filter plus VPL**
Air-cooled	Liquid-cooled/	Air-cooled	Liquid-cooled/	kW	A	Article No.
Line voltage 380 ... 480 V 3 AC						
6SL3310-1TE32-1AA3	6SL3315-1TE32-1AA3	6SL3320-1TE32-1AA3	6SL3325-1TE32-1AA3	110	210	**6SL3000-2DE32-6AA0**
6SL3310-1TE32-6AA3	6SL3315-1TE32-6AA3	6SL3320-1TE32-6AA3	6SL3325-1TE32-6AA3	132	260	
6SL3310-1TE33-1AA3	6SL3315-1TE33-1AA3	6SL3320-1TE33-1AA3	6SL3325-1TE33-1AA3	160	310	**6SL3000-2DE35-0AA0**
6SL3310-1TE33-8AA3	–	6SL3320-1TE33-8AA3	–	200	380	
6SL3310-1TE35-0AA3	6SL3315-1TE35-0AA3	6SL3320-1TE35-0AA3	6SL3325-1TE35-0AA3	250	490	
–	–	6SL3320-1TE36-1AA3	6SL3325-1TE36-1AA3	315	605	**6SL3000-2DE38-4AA0**
–	–	6SL3320-1TE37-5AA3	6SL3325-1TE37-5AA3	400	745	
–	–	6SL3320-1TE38-4AA3	6SL3325-1TE38-4AA3	450	840	
–	–	6SL3320-1TE41-0AA3	6SL3325-1TE41-0AA3	560	985	**6SL3000-2DE41-4AA0**
–	–	6SL3320-1TE41-2AA3	6SL3325-1TE41-2AA3	710	1260	
–	–	6SL3320-1TE41-4AA3	6SL3325-1TE41-4AA3	800	1405	
			6SL3325-1TE41-4AS3 [1]	800	1330	
Line voltage 500 ... 690 V 3 AC						
–	–	6SL3320-1TG28-5AA3	–	75	85	**6SL3000-2DH31-0AA0**
–	–	6SL3320-1TG31-0AA3	6SL3325-1TG31-0AA3	90	100	
–	–	6SL3320-1TG31-2AA3	–	110	120	**6SL3000-2DH31-5AA0**
–	–	6SL3325-1TG31-5AA3	6SL3320-1TG31-5AA3	132	150	
–	–	6SL3320-1TG31-8AA3	–	160	175	**6SL3000-2DH32-2AA0**
–	–	6SL3320-1TG32-2AA3	6SL3325-1TG32-2AA3	200	215	
–	–	6SL3320-1TG32-6AA3	–	250	260	**6SL3000-2DH33-3AA0**
–	–	6SL3320-1TG33-3AA3	6SL3325-1TG33-3AA3	315	330	
–	–	6SL3320-1TG34-1AA3	–	400	410	**6SL3000-2DH34-1AA0**
–	–	6SL3320-1TG34-7AA3	6SL3325-1TG34-7AA3	450	465	**6SL3000-2DH35-8AA0**
–	–	6SL3320-1TG35-8AA3	6SL3325-1TG35-8AA3	560	575	
–	–	6SL3320-1TG37-4AA3	6SL3325-1TG37-4AA3	710	735	**6SL3000-2DH38-1AA0**
–	–	6SL3320-1TG38-1AA3	6SL3325-1TG38-0AA3 6SL3325-1TG38-1AA3	800	810	
–	–	6SL3320-1TG38-8AA3	–	900	910	**6SL3000-2DH41-3AA0**
–	–	6SL3320-1TG41-0AA3	6SL3325-1TG41-0AA3	1000	1025	
–	–	6SL3320-1TG41-3AA3	6SL3325-1TG41-3AA3	1200	1270	

[1] This Motor Module has been specifically designed for loads demanding a high dynamic performance.

© Siemens 2024

Selection and ordering data

dv/dt filter plus VPL for Motor Modules in chassis-2 format

Suitable for Motor Module in chassis-2 format Air-cooled	Type rating at 400 V kW	Rated output current A	**dv/dt filter plus VPL** Article No.
Line voltage 380 ... 480 V 3 AC			
6SL3321-1TE36-6AA0	315	655	**6SL3000-2DE38-4AA0**
6SL3321-1TE37-4AA0	355	740	**6SL3000-2DE41-4AA0**
6SL3321-1TE38-1AA0	400	810	**6SL3000-2DE41-4AA0**
6SL3321-1TE38-8AA0	450	910	**6SL3000-2DE41-4AA0**
6SL3321-1TE41-0AA0	500	975	**6SL3000-2DE41-4AA0**
6SL3321-1TE41-1AA0	560	1075	**6SL3000-2DE41-4AA0**
6SL3321-1TE41-2AA0	630	1200	**6SL3000-2DE41-4AA0**

© Siemens 2024

Technical specifications

Line voltage 380 ... 480 V 3 AC		dv/dt filter plus VPL			
		6SL3000-2DE32-6AA0	6SL3000-2DE35-0AA0	6SL3000-2DE38-4AA0	6SL3000-2DE41-4AA0 [1]
$I_{th\ max}$	A	260	490	840	1405
Degree of protection		IP00	IP00	IP00	IP00
Cable length, max. between dv/dt filter and motor [2]					
• Shielded	m (ft)	300 (984)	300 (984)	300 (984)	300 (984)
• Unshielded	m (ft)	450 (1476)	450 (1476)	450 (1476)	450 (1476)
Conformity		CE	CE	CE	CE
Certificate of suitability		cURus	cURus	cURus	cURus
dv/dt reactor					
Power loss, max. [3]					
• At 50 Hz 400 V	kW	0.701	0.874	1.106	1.111
• At 60 Hz 460 V	kW	0.729	0.904	1.115	1.154
• At 150 Hz 400 V	kW	0.78	0.963	1.226	1.23
Connections					
• To the Power Module/Motor Module		1 × hole for M10	1 × hole for M12	1 × hole for M12	2 × hole for M12
• To load		1 × hole for M10	1 × hole for M12	1 × hole for M12	2 × hole for M12
• PE		M6 screw	M6 screw	M6 screw	M6 screw
Dimensions					
• Width	mm (in)	410 (16.1)	460 (18.1)	460 (18.1)	445 (17.5)
• Height	mm (in)	370 (14.6)	370 (14.6)	385 (15.2)	385 (15.2)
• Depth	mm (in)	229 (9.02)	275 (10.8)	312 (12.3)	312 (12.3)
Weight, approx.	kg (lb)	66 (146)	122 (269)	149 (328)	158 (348)
Voltage Peak Limiter (VPL)					
Power loss, max.					
• At 50 Hz 400 V	kW	0.029	0.042	0.077	0.134
• At 60 Hz 460 V	kW	0.027	0.039	0.072	0.125
• At 150 Hz 400 V	kW	0.025	0.036	0.066	0.114
Connections					
• To dv/dt reactor		M8 nut	70 mm^2 terminals	1 × hole for M8	1 × hole for M10
• To DC link		M8 nut	70 mm^2 terminals	1 × hole for M8	1 × hole for M10
• PE		M8 stud	35 mm^2 terminals	M8 stud	M8 stud
Dimensions					
• Width	mm (in)	265 (10.4)	392 (15.4)	309 (12.2)	309 (12.2)
• Height	mm (in)	263 (10.4)	285 (11.2)	1313 (51.7)	1313 (51.7)
• Depth	mm (in)	190 (7.48)	210 (8.27)	400 (15.7)	400 (15.7)
Weight, approx.	kg (lb)	6 (13.2)	16 (35.3)	48 (106)	72 (159)
Suitable for Power Module		6SL3310-1TE32-1AA3 6SL3315-1TE32-1AA3 6SL3310-1TE32-6AA3 6SL3315-1TE32-6AA3	6SL3310-1TE33-1AA3 6SL3315-1TE33-1AA3 6SL3310-1TE33-8AA3 6SL3310-1TE35-0AA3 6SL3315-1TE35-0AA3	–	–
Suitable for Motor Module		6SL3320-1TE32-1AA3 6SL3325-1TE32-1AA3 6SL3320-1TE32-6AA3 6SL3325-1TE32-6AA3	6SL3320-1TE33-1AA3 6SL3325-1TE33-1AA3 6SL3320-1TE33-8AA3 6SL3320-1TE35-0AA3 6SL3325-1TE35-0AA3	6SL3320-1TE36-1AA3 6SL3325-1TE36-1AA3 6SL3320-1TE37-5AA3 6SL3325-1TE37-5AA3 6SL3320-1TE38-4AA3 6SL3325-1TE38-4AA3 6SL3321-1TE36-6AA0	6SL3320-1TE41-0AA3 6SL3325-1TE41-0AA3 6SL3320-1TE41-2AA3 6SL3325-1TE41-2AA3 6SL3320-1TE41-4AA3 6SL3325-1TE41-4AA3 6SL3325-1TE41-4AS3 [2] 6SL3321-1TE37-4AA0 6SL3321-1TE38-1AA0 6SL3321-1TE38-8AA0 6SL3321-1TE41-0AA0 6SL3321-1TE41-1AA0 6SL3321-1TE41-2AA0

[1] These dv/dt filters include two dv/dt reactors. The technical specifications listed refer to a dv/dt reactor.
For additional information on dv/dt filters, please refer to the SINAMICS Low Voltage Engineering Manual.

[2] Longer cable lengths for specific configurations are available on request.

[3] This Motor Module has been specifically designed for loads demanding a high dynamic performance.

© Siemens 2024

Technical specifications

Line voltage 500 ... 690 V 3 AC		**dv/dt filter plus VPL**			
		6SL3000-2DH31-0AA0	6SL3000-2DH31-5AA0	6SL3000-2DH32-2AA0	6SL3000-2DH33-3AA0
$I_{th\ max}$	A	100	150	215	330
Degree of protection		IP00	IP00	IP00	IP00
Cable length, max. between dv/dt filter and motor [1]					
• Shielded	m (ft)	300 (984)	300 (984)	300 (984)	300 (984)
• Unshielded	m (ft)	450 (1476)	450 (1476)	450 (1476)	450 (1476)
Conformity		CE	CE	CE	CE
Certificate of suitability [2]		cURus	cURus	cURus	cURus
dv/dt reactor					
Power loss, max.					
• At 50 Hz 500/690 V	kW	0.49	0.389	0.578	0.595
• At 60 Hz 575 V	kW	0.508	0.408	0.604	0.62
• At 150 Hz 500/690 V	kW	0.541	0.436	0.645	0.661
Connections					
• To the Power Module/Motor Module		1 × hole for M10	1 × hole for M10	1 × hole for M10	1 × hole for M10
• To load		1 × hole for M10	1 × hole for M10	1 × hole for M10	1 × hole for M10
• PE		M6 screw	M6 screw	M6 screw	M6 screw
Dimensions					
• Width	mm (in)	350 (13.8)	350 (13.8)	460 (18.1)	460 (18.1)
• Height	mm (in)	320 (12.6)	320 (12.6)	360 (14.2)	360 (14.2)
• Depth	mm (in)	227 (8.94)	227 (8.94)	275 (10.8)	275 (10.8)
Weight, approx.	kg (lb)	48 (106)	50 (110)	83 (183)	135 (298)
Voltage Peak Limiter (VPL)					
Power loss, max.					
• At 50 Hz 500/690 V	kW	0.016	0.02	0.032	0.042
• At 60 Hz 575 V	kW	0.015	0.019	0.03	0.039
• At 150 Hz 500/690 V	kW	0.013	0.018	0.027	0.036
Connections					
• To dv/dt reactor		M8 nut	M8 nut	70 mm^2 terminals	70 mm^2 terminals
• To DC link		M8 nut	M8 nut	70 mm^2 terminals	70 mm^2 terminals
• PE		M8 stud	M8 stud	35 mm^2 terminals	35 mm^2 terminals
Dimensions					
• Width	mm (in)	263 (10.4)	263 (10.4)	392 (15.4)	392 (15.4)
• Height	mm (in)	265 (10.4)	265 (10.4)	285 (11.2)	285 (11.2)
• Depth	mm (in)	188 (7.40)	188 (7.40)	210 (8.27)	210 (8.27)
Weight, approx.	kg (lb)	6 (13.2)	6 (13.2)	16 (35.3)	16 (35.3)
Suitable for Motor Module		6SL3320-1TG28-5AA3 6SL3320-1TG31-0AA3 6SL3325-1TG31-0AA3	6SL3320-1TG31-2AA3 6SL3320-1TG31-5AA3 6SL3325-1TG31-5AA3	6SL3320-1TG31-8AA3 6SL3320-1TG32-2AA3 6SL3325-1TG32-2AA3	6SL3320-1TG32-6AA3 6SL3320-1TG33-3AA3 6SL3325-1TG33-3AA3

[1] Longer cable lengths for specific configurations are available on request.
[2] Only for line voltages 500 ... 600 V 3 AC.

© Siemens 2024

Technical specifications

Line voltage 500 ... 690 V 3 AC		dv/dt filter plus VPL			
		6SL3000-2DH34-1AA0	6SL3000-2DH35-8AA0	6SL3000-2DH38-1AA0 [1]	6SL3000-2DH41-3AA0 [1]
$I_{th\ max}$	A	410	575	810	1270
Degree of protection		IP00	IP00	IP00	IP00
Cable length, max. between dv/dt filter and motor [2]					
• Shielded	m (ft)	300 (984)	300 (984)	300 (984)	300 (984)
• Unshielded	m (ft)	450 (1476)	450 (1476)	450 (1476)	450 (1476)
Conformity		CE	CE	CE	CE
Certificate of suitability [3]		cURus	cURus	cURus	cURus
dv/dt reactor					
Power loss, max.					
• At 50 Hz 500/690 V	kW	0.786	0.862	0.828	0.865
• At 60 Hz 575 V	kW	0.826	0.902	0.867	0.904
• At 150 Hz 500/690 V	kW	0.884	0.964	0.927	0.966
Connections					
• To the Power Module/Motor Module		1 × hole for M12	1 × hole for M12	2 × hole for M12	2 × hole for M12
• To load		1 × hole for M12	1 × hole for M12	2 × hole for M12	2 × hole for M12
• PE		M6 screw	M6 screw	M6 screw	M6 screw
Dimensions					
• Width	mm (in)	460 (18.1)	460 (18.1)	445 (17.5)	445 (17.5)
• Height	mm (in)	385 (15.2)	385 (15.2)	385 (15.2)	385 (15.2)
• Depth	mm (in)	312 (12.3)	312 (12.3)	312 (12.3)	312 (12.3)
Weight, approx.	kg (lb)	147 (324)	172 (379)	160 (353)	164 (362)
Voltage Peak Limiter (VPL)					
Power loss, max.					
• At 50 Hz 500/690 V	kW	0.051	0.063	0.106	0.15
• At 60 Hz 575 V	kW	0.048	0.059	0.1	0.14
• At 150 Hz 500/690 V	kW	0.043	0.054	0.091	0.128
Connections					
• To dv/dt reactor		1 × hole for M8	1 × hole for M8	1 × hole for M10	1 × hole for M10
• To DC link		1 × hole for M8	1 × hole for M8	1 × hole for M10	1 × hole for M10
• PE		M8 stud	M8 stud	M8 stud	M8 stud
Dimensions					
• Width	mm (in)	309 (12.2)	309 (12.2)	309 (12.2)	309 (12.2)
• Height	mm (in)	1313 (51.7)	1313 (51.7)	1313 (51.7)	1313 (51.7)
• Depth	mm (in)	400 (15.7)	400 (15.7)	400 (15.7)	400 (15.7)
Weight, approx.	kg (lb)	48 (106)	48 (106)	72 (159)	73 (161)
Suitable for Motor Module		6SL3320-1TG34-1AA3	6SL3320-1TG34-7AA3 6SL3325-1TG34-7AA3 6SL3320-1TG35-8AA3 6SL3325-1TG35-8AA3	6SL3320-1TG37-4AA3 6SL3325-1TG37-4AA3 6SL3320-1TG38-1AA3 6SL3325-1TG38-0AA3 6SL3325-1TG38-1AA3	6SL3320-1TG38-8AA3 6SL3320-1TG41-0AA3 6SL3325-1TG41-0AA3 6SL3320-1TG41-3AA3 6SL3325-1TG41-3AA3

[1] These dv/dt filters include two dv/dt reactors. The technical specifications listed refer to a dv/dt reactor.
For additional information on dv/dt filters, please refer to the SINAMICS Low Voltage Engineering Manual.

[2] Longer cable lengths for specific configurations are available on request.

[3] Only for line voltages 500 ... 600 V 3 AC.

© Siemens 2024

Overview

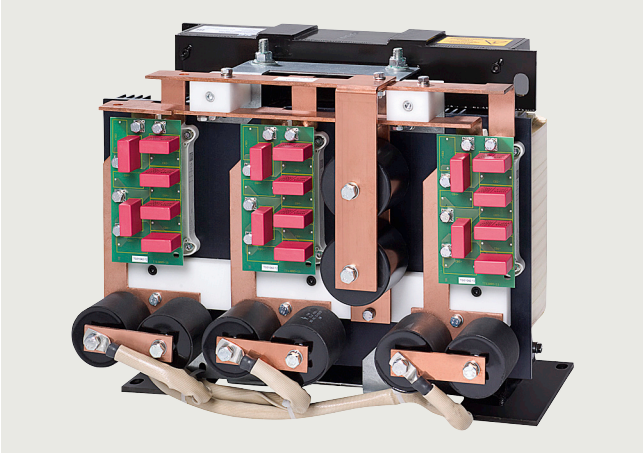

dv/dt filters compact plus VPL (**V**oltage **P**eak **L**imiter) limit the voltage rate of rise *dv/dt* to values of < 1600 V/µs and the typical peak voltage to the following values in accordance with the limit value curve A according to IEC 60034-25: 2007:

< 1150 V at U_{line} < 575 V

< 1400 V at 660 V < U_{line} < 690 V

Standard motors with standard insulation and without insulated bearings with a supply voltage of up to 690 V can be used for converter operation if a dv/dt filter compact plus VPL is used.

dv/dt filters compact plus VPL are designed for the following maximum motor cable lengths:

- Shielded cables: 100 m (e.g. Protodur NYCWY)
- Unshielded cables: 150 m (e.g. Protodur NYY)

For longer cable lengths (> 100 m shielded, > 150 m unshielded) refer to dv/dt filter plus VPL.

Notice:

- The max. permissible cable length between the dv/dt filter and Motor Module is 5 m
- Operation with output frequencies < 10 Hz is permissible for max. 5 min.

Design

The dv/dt filter compact plus VPL consists of two components, which are supplied together as a compact mechanical unit:

- dv/dt reactor
- Voltage limiting network, which cuts off the voltage peaks and feeds the energy back to the DC link.

© Siemens 2024

Selection and ordering data

dv/dt filter plus VPL for Motor Modules in chassis format

Suitable for Power Module		Suitable for Motor Module		Type rating at 400 V/ 690 V	**dv/dt filter compact plus VPL**
Air-cooled	Liquid-cooled	Air-cooled	Liquid-cooled	kW	Article No.
Line voltage 380 ... 480 V 3 AC					
6SL3310-1TE32-1AA3	6SL3315-1TE32-1AA3	6SL3320-1TE32-1AA3	6SL3325-1TE32-1AA3	110	**6SL3000-2DE32-6EA0**
6SL3310-1TE32-6AA3	6SL3315-1TE32-6AA3	6SL3320-1TE32-6AA3	6SL3325-1TE32-6AA3	132	
6SL3310-1TE33-1AA3	6SL3315-1TE33-1AA3	6SL3320-1TE33-1AA3	6SL3325-1TE33-1AA3	160	**6SL3000-2DE35-0EA0**
6SL3310-1TE33-8AA3	–	6SL3320-1TE33-8AA3	–	200	
6SL3310-1TE35-0AA3	6SL3315-1TE35-0AA3	6SL3320-1TE35-0AA3	6SL3325-1TE35-0AA3	250	
–	–	6SL3320-1TE36-1AA3	6SL3325-1TE36-1AA3	315	**6SL3000-2DE38-4EA0**
–	–	6SL3320-1TE37-5AA3	6SL3325-1TE37-5AA3	400	
–	–	6SL3320-1TE38-4AA3	6SL3325-1TE38-4AA3	450	
–	–	6SL3320-1TE41-0AA3	6SL3325-1TE41-0AA3	560	**6SL3000-2DE41-4EA0**
–	–	6SL3320-1TE41-2AA3	6SL3325-1TE41-2AA3	710	
–	–	6SL3320-1TE41-4AA3	6SL3325-1TE41-4AA3	800	
			6SL3325-1TE41-4AS3 [1]	800	
Line voltage 500 ... 690 V 3 AC					
–	–	6SL3320-1TG28-5AA3	–	75	**6SL3000-2DG31-0EA0**
–	–	6SL3320-1TG31-0AA3	6SL3325-1TG31-0AA3	90	
–	–	6SL3320-1TG31-2AA3	–	110	**6SL3000-2DG31-5EA0**
–	–	6SL3320-1TG31-5AA3	6SL3325-1TG31-5AA3	132	
–	–	6SL3320-1TG31-8AA3	–	160	**6SL3000-2DG32-2EA0**
–	–	6SL3320-1TG32-2AA3	6SL3325-1TG32-2AA3	200	
–	–	6SL3320-1TG32-6AA3	–	250	**6SL3000-2DG33-3EA0**
–	–	6SL3320-1TG33-3AA3	6SL3325-1TG33-3AA3	315	
–	–	6SL3320-1TG34-1AA3	–	400	**6SL3000-2DG34-1EA0**
–	–	6SL3320-1TG34-7AA3	6SL3325-1TG34-7AA3	450	**6SL3000-2DG35-8EA0**
–	–	6SL3320-1TG35-8AA3	6SL3325-1TG35-8AA3	560	
–	–	6SL3320-1TG37-4AA3	6SL3325-1TG37-4AA3	710	**6SL3000-2DG38-1EA0**
–	–	6SL3320-1TG38-1AA3	6SL3325-1TG38-0AA3	800	
–	–		6SL3325-1TG38-1AA3	800	
–	–	6SL3320-1TG38-8AA3	–	900	**6SL3000-2DG41-3EA0**
–	–	6SL3320-1TG41-0AA3	6SL3325-1TG41-0AA3	1000	
–	–	6SL3320-1TG41-3AA3	6SL3325-1TG41-3AA3	1200	

[1] This Motor Module has been specifically designed for loads demanding a high dynamic performance.

© Siemens 2024

Selection and ordering data

dv/dt filter compact plus VPL for Motor Modules in chassis-2 format

Suitable for Motor Module in chassis-2 format Air-cooled	Type rating at 400 V kW	Rated output current A	**dv/dt filter compact plus VPL** Article No.
Line voltage 380 ... 480 V 3 AC			
6SL3321-1TE36-6AA0	315	655	**6SL3000-2DE38-4EA0**
6SL3321-1TE37-4AA0	355	740	**6SL3000-2DE41-4EA0**
6SL3321-1TE38-1AA0	400	810	**6SL3000-2DE41-4EA0**
6SL3321-1TE38-8AA0	450	910	**6SL3000-2DE41-4EA0**
6SL3321-1TE41-0AA0	500	975	**6SL3000-2DE41-4EA0**
6SL3321-1TE41-1AA0	560	1075	**6SL3000-2DE41-4EA0**
6SL3321-1TE41-2AA0	630	1200	**6SL3000-2DE41-4EA0**

For additional information on dv/dt filters, please refer to the SINAMICS Low Voltage Engineering Manual.

© Siemens 2024

Technical specifications

Line voltage 380 ... 480 V 3 AC		dv/dt filter compact plus VPL			
		6SL3000-2DE32-6EA0	6SL3000-2DE35-0EA0	6SL3000-2DE38-4EA0	6SL3000-2DE41-4EA0
Rated current	A	260	490	840	1405
$I_{th\ max}$	A	260	490	840	1405
Power loss, max.					
• At 50 Hz 400 V	kW	0.21	0.29	0.518	Reactor: 1.027 VPL: 0.127 Total: 1.154
• At 60 Hz 460 V	kW	0.215	0.296	0.529	Reactor: 1.077 VPL: 0.12 Total: 1.197
• At 150 Hz 400 V	kW	0.255	0.344	0.609	Reactor: 1.354 VPL: 0.09 Total: 1.444
Power connection input and output side		Hole for M10	Hole for M10	Hole for M12	2 × elongated hole, 14 × 18 mm
• Conductor cross-section, max. (IEC)		Provided for busbar connection	Provided for busbar connection	Provided for busbar connection	Provided for busbar connection
DC link connection DCPS, DCNS		Threaded socket M8	Threaded socket M8	Hole for M8	Hole for M8
• Conductor cross-section, max. (IEC)	mm^2	16	25	50	95
PE/GND connection		Threaded socket M6	Threaded socket M6	Threaded socket M6	Threaded socket M6 (reactor and VPL)
Motor cable length, max.					
• Shielded	m (ft)	100 (328)	100 (328)	100 (328)	100 (328)
• Unshielded	m (ft)	150 (492)	150 (492)	150 (492)	150 (492)
Degree of protection		IP00	IP00	IP00	IP00
Dimensions					
• Width	mm (in)	310 (12.2)	350 (13.8)	440 (17.3)	Reactor: 430 VPL: 277
• Height	mm (in)	283 (11.1)	317 (12.5)	369 (14.5)	Reactor: 385 VPL: 360
• Depth	mm (in)	238 (9.37)	260 (10.2)	311 (12.2)	Reactor: 323 VPL: 291
Weight, approx.	kg (lb)	41 (90.4)	61 (134)	103 (227)	Reactor: 168.8 VPL: 19.2 Total: 188
Conformity		CE	CE	CE	CE
Certificates of suitability		cURus	cURus	cURus	cURus
Suitable for Power Module		6SL3310-1TE32-1AA3 6SL3315-1TE32-1AA3 6SL3310-1TE32-6AA3 6SL3315-1TE32-6AA3	6SL3310-1TE33-1AA3 6SL3315-1TE33-1AA3 6SL3310-1TE33-8AA3 6SL3310-1TE35-0AA3 6SL3315-1TE35-0AA3		
Suitable for Motor Module		6SL3320-1TE32-1AA3 6SL3325-1TE32-1AA3 6SL3320-1TE32-6AA3 6SL3325-1TE32-6AA3	6SL3320-1TE33-1AA3 6SL3325-1TE33-1AA3 6SL3320-1TE33-8AA3 6SL3320-1TE35-0AA3 6SL3325-1TE35-0AA3	6SL3320-1TE36-1AA3 6SL3325-1TE36-1AA3 6SL3320-1TE37-5AA3 6SL3325-1TE37-5AA3 6SL3320-1TE38-4AA3 6SL3325-1TE38-4AA3 6SL3321-1TE36-6AA0	6SL3320-1TE41-0AA3 6SL3325-1TE41-0AA3 6SL3320-1TE41-2AA3 6SL3325-1TE41-2AA3 6SL3320-1TE41-4AA3 6SL3325-1TE41-4AA3 6SL3325-1TE41-4AS3 [1] 6SL3321-1TE37-4AA0 6SL3321-1TE38-1AA0 6SL3321-1TE38-8AA0 6SL3321-1TE41-0AA0 6SL3321-1TE41-1AA0 6SL3321-1TE41-2AA0

[1] This Motor Module has been specifically designed for loads demanding a high dynamic performance.

© Siemens 2024

Technical specifications

Line voltage 500 ... 690 V 3 AC		dv/dt filter compact plus VPL			
		6SL3000-2DG31-0EA0	6SL3000-2DG31-5EA0	6SL3000-2DG32-2EA0	6SL3000-2DG33-3EA0
Rated current	A	100	150	215	330
$I_{th\ max}$	A	100	150	215	330
Power loss, max.					
• At 50 Hz 500/690 V	kW	0.227	0.27	0.305	0.385
• At 60 Hz 575 V	kW	0.236	0.279	0.316	0.399
• At 150 Hz 500/690 V	kW	0.287	0.335	0.372	0.48
Power connection input and output side		Hole for M10	Hole for M10	Hole for M10	Hole for M10
• Conductor cross-section, max. (IEC)		Provided for busbar connection	Provided for busbar connection	Provided for busbar connection	Provided for busbar connection
DC link connection DCPS, DCNS		Threaded socket M8	Threaded socket M8	Hole for M8	Hole for M8
• Conductor cross-section, max. (IEC)	mm^2	16	16	25	25
PE/GND connection		Threaded socket M6	Threaded socket M6	Threaded socket M6	Threaded socket M6
Motor cable length, max.					
• Shielded	m (ft)	100 (328)	100 (328)	100 (328)	100 (328)
• Unshielded	m (ft)	150 (492)	150 (492)	150 (492)	150 (492)
Degree of protection		IP00	IP00	IP00	IP00
Dimensions					
• Width	mm (in)	310 (12.2)	310 (12.2)	350 (13.8)	350 (13.8)
• Height	mm (in)	283 (11.1)	283 (11.1)	317 (12.5)	317 (12.5)
• Depth	mm (in)	238 (9.37)	238 (9.37)	260 (10.2)	260 (10.2)
Weight, approx.	kg (lb)	34 (75.0)	36 (79.4)	51 (112)	60 (132)
Conformity		CE	CE	CE	CE
Certificate of suitability [1]		cURus	cURus	cURus	cURus
Suitable for Motor Module		6SL3320-1TG28-5AA3 6SL3320-1TG31-0AA3 6SL3325-1TG31-0AA3	6SL3320-1TG31-2AA3 6SL3320-1TG31-5AA3 6SL3325-1TG31-5AA3	6SL3320-1TG31-8AA3 6SL3320-1TG32-2AA3 6SL3325-1TG32-2AA3	6SL3320-1TG32-6AA3 6SL3320-1TG33-3AA3 6SL3325-1TG33-3AA3

[1] Only for line voltages 500 ... 600 V 3 AC.

© Siemens 2024

Technical specifications

Line voltage 500 ... 690 V 3 AC		dv/dt filter compact plus VPL			
		6SL3000-2DG34-1EA0	6SL3000-2DG35-8EA0	6SL3000-2DG38-1EA0	6SL3000-2DG41-3EA0
Rated current	A	410	575	810	1270
$I_{th\ max}$	A	410	575	810	1270
Power loss, max.					
• At 50 Hz 500/690 V	kW	0.55	0.571	Reactor: 0.88 VPL: 0.084 Total: 0.964	Reactor: 0.926 VPL: 0.124 Total: 1.05
• At 60 Hz 575 V	kW	0.568	0.586	Reactor: 0.918 VPL: 0.08 Total: 0.998	Reactor: 0.993 VPL: 0.111 Total: 1.104
• At 150 Hz 500/690 V	kW	0.678	0.689	Reactor: 1.137 VPL: 0.059 Total: 1.196	Reactor: 1.23 VPL: 0.089 Total: 1.319
Power connection input and output side		Hole for M12	Hole for M12	2 × elongated hole, 14 × 18 mm	2 × elongated hole, 14 × 18 mm
• Conductor cross-section, max. (IEC)		Provided for busbar connection	Provided for busbar connection	Provided for busbar connection	Provided for busbar connection
DC link connection DCPS, DCNS		Hole for M8	Hole for M8	Hole for M8	Hole for M8
• Conductor cross-section, max. (IEC)	mm^2	50	50	95	95
PE/GND connection		Threaded socket M6	Threaded socket M6	Threaded socket M6 (reactor and VPL)	Threaded socket M6 (reactor and VPL)
Motor cable length, max.					
• Shielded	m (ft)	100 (328)	100 (328)	100 (328)	100 (328)
• Unshielded	m (ft)	150 (492)	150 (492)	150 (492)	150 (492)
Degree of protection		IP00	IP00	IP00	IP00
Dimensions					
• Width	mm (in)	440 (17.3)	440 (17.3)	Reactor: 430 (16.9) VPL: 277 (10.9)	Reactor: 430 (16.9) VPL: 277 (10.9)
• Height	mm (in)	369 (14.5)	369 (14.5)	Reactor: 385 (15.2) VPL: 360 (14.2)	Reactor: 385 (15.2) VPL: 360 (14.2)
• Depth	mm (in)	311 (12.2)	311 (12.2)	Reactor: 323 (12.7) VPL: 291 (11.5)	Reactor: 323 (12.7) VPL: 291 (11.5)
Weight, approx.	kg (lb)	87 (192)	100 (220)	Reactor: 171.2 (377) VPL: 18.8 (41.4) Total: 190 (419)	Reactor: 175.8 (388) VPL: 19.2 (42.3) Total: 195 (430)
Conformity		CE	CE	CE	CE
Certificate of suitability [1]		cURus	cURus	cURus	cURus
Suitable for Motor Module		6SL3320-1TG34-1AA3	6SL3320-1TG34-7AA3 6SL3325-1TG34-7AA3 6SL3320-1TG35-8AA3 6SL3325-1TG35-8AA3	6SL3320-1TG37-4AA3 6SL3325-1TG37-4AA3 6SL3320-1TG38-1AA3 6SL3325-1TG38-0AA3 6SL3325-1TG38-1AA3	6SL3320-1TG38-8AA3 6SL3320-1TG41-0AA3 6SL3325-1TG41-0AA3 6SL3320-1TG41-3AA3 6SL3325-1TG41-3AA3

[1] Only for line voltages 500 ... 600 V 3 AC.

© Siemens 2024

Overview

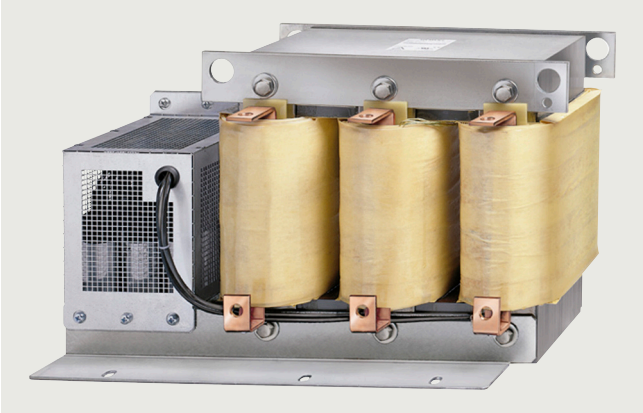

If a sine-wave filter is connected to the output of the Power Module or Motor Module, the voltage between the motor terminals is virtually sinusoidal. This reduces the voltage load on the motor windings and prevents motor noise induced by the pulse frequency.

The pulse frequency of the modules must be set to 4 kHz for the sine-wave filters. The max. output frequency with sine-wave filter is limited to 150 Hz.

As a result, the max. possible output current and the max. achievable output voltage of the units are reduced. The voltage drops across the sine-wave filter, a factor which must also be taken into account in the drive design.

A sine-wave filter must be installed as close as possible to the Motor Module or Power Module.

It is only permissible to operate the sine-wave filter when the motor is connected (sine-wave filters are not no-load proof)!

For additional information on sine-wave filters, please refer to the SINAMICS Low Voltage Engineering Manual.

Selection and ordering data

Suitable for Power Module		Suitable for Motor Module		Type rating at 400 V	Rated output current	**Sine-wave filter**
Air-cooled	Liquid-cooled	Air-cooled	Liquid-cooled	kW	A	Article No.
Line voltage 380 ... 480 V 3 AC						
6SL3310-1TE32-1AA3	6SL3315-1TE32-1AA3	6SL3320-1TE32-1AA3	6SL3325-1TE32-1AA3	110	210	**6SL3000-2CE32-3AA0**
6SL3310-1TE32-6AA3	6SL3315-1TE32-6AA3	6SL3320-1TE32-6AA3	6SL3325-1TE32-6AA3	132	260	
6SL3310-1TE33-1AA3	6SL3315-1TE33-1AA3	6SL3320-1TE33-1AA3	6SL3325-1TE33-1AA3	160	310	**6SL3000-2CE32-8AA0**
6SL3310-1TE33-8AA3	–	6SL3320-1TE33-8AA3	–	200	380	**6SL3000-2CE33-3AA0**
6SL3310-1TE35-0AA3	6SL3315-1TE35-0AA3	6SL3320-1TE35-0AA3	6SL3325-1TE35-0AA3	250	490	**6SL3000-2CE34-1AA0**

© Siemens 2024

Technical specifications

Line voltage 380 ... 480 V 3 AC		Sine-wave filter				
		6SL3000-2CE32-3AA0		6SL3000-2CE32-8AA0	6SL3000-2CE33-3AA0	6SL3000-2CE34-1AA0
Rated current	A	225		276	333	408
Power loss, max.						
• At 50 Hz 400 V	kW	0.221		0.235	0.245	0.34
• At 60 Hz 460 V	kW	0.265		0.282	0.294	0.408
• At 150 Hz 400 V	kW	0.48		0.5	0.53	0.75
Load connection		Flat connector for M10 screw		Flat connector for M10 screw	Flat connector for M10 screw	Flat connector for M10 screw
PE connection		1 × hole for M10		1 × hole for M10	1 × hole for M10	1 × hole for M10
Cable length, max. between sine-wave filter and motor						
• Shielded	m (ft)	300 (984)		300 (984)	300 (984)	300 (984)
• Unshielded	m (ft)	450 (1476)		450 (1476)	450 (1476)	450 (1476)
Degree of protection		IP00		IP00	IP00	IP00
Dimensions						
• Width	mm (in)	620 (24.4)		620 (24.4)	620 (24.4)	620 (24.4)
• Height	mm (in)	300 (11.8)		300 (11.8)	370 (14.6)	370 (14.6)
• Depth	mm (in)	320 (12.6)		320 (12.6)	360 (14.2)	360 (14.2)
Weight, approx.	kg (lb)	124 (273)		127 (280)	136 (300)	198 (437)
Conformity		CE		CE	CE	CE
Certificate of suitability		cURus		cURus	cURus	cURus
Suitable for Power Module		6SL3310-1TE32-1AA3 6SL3315-1TE32-1AA3	6SL3310-1TE32-6AA3 6SL3315-1TE32-6AA3	6SL3310-1TE33-1AA3 6SL3315-1TE33-1AA3	6SL3310-1TE33-8AA3	6SL3310-1TE35-0AA3 6SL3315-1TE35-0AA3
Suitable for Motor Module		6SL3320-1TE32-1AA3 6SL3325-1TE32-1AA3	6SL3320-1TE32-6AA3 6SL3325-1TE32-6AA3	6SL3320-1TE33-1AA3 6SL3325-1TE33-1AA3	6SL3320-1TE33-8AA3	6SL3320-1TE35-0AA3 6SL3325-1TE35-0AA3
• Rated output current of the Motor Module or Power Module at a pulse frequency of 4 kHz	A	170	215	270	330	380

© Siemens 2024

Overview

CU310-2 PN Control Unit

CU320-2 PN Control Unit

System architecture with a central Control Unit

Electronically coordinated individual drives work together to perform your drive tasks. In multi-axis drives, the individual drives are controlled from the higher-level control systems in such a way as to achieve the desired coordinated movement. This requires cyclic data exchange between the controller and the drives. A central Control Unit controls the drives for all connected axes and also establishes the technological links between the drives and/or axes. Since all the required data is stored in the central Control Unit, it does not need to be transferred. Inter-axis connections can be established within a Control Unit and easily configured in the STARTER commissioning tool using a mouse.

- The SINAMICS Control Unit can handle simple technological tasks by itself
- The **CU310-2 DP** or **CU310-2 PN** Control Units are used in conjunction with Power Modules and single-motor drives.
- The **CU320-2 DP** or **CU320-2 PN** Control Units are used in conjunction with all Motor Modules or Line Modules for single or multi-motor drives.
- Sophisticated motion control tasks can be implemented with the support of the more powerful **D410-2**, **D425-2**, **D435-2**, and **D445-2** Control Units of **SIMOTION D** (graded according to performance).

You can obtain further information about SIMOTION in SiePortal and Catalog PM 21.

Each of these Control Units is based on an object-oriented SINAMICS standard firmware, which contains all common control modes and can be scaled to meet even the most advanced performance requirements.

The drive controls are supplied as ready-to-configure drive objects:

- Infeed Control for mains infeed
- Vector control
  - Speed-controlled drives with high speed and torque stability in general machine and plant construction
  - Particularly suitable for induction motors
  - Optimized pulse patterns for efficient motor/converter systems
- Servo control
  - Drives with highly dynamic motion control
  - Angular-locked synchronism with isochronous PROFIBUS/PROFINET
  - For use in machine tools and clocked production machines

The most commonly used v/f control modes are stored in the "Vector control" drive object and are ideal for implementing even simple applications such as group drives with SIEMOSYN motors.

CompactFlash card

The functions of the drives are stored on a CompactFlash card. This card contains the firmware and parameter settings for all drives in the form of a project. The CompactFlash card can also hold additional projects, which means that the correct project can be accessed immediately when series machines of different types are commissioned. When the Control Unit has booted, the data on the CompactFlash card is read and loaded to the RAM.

The firmware is organized in objects. Drive objects are used to implement open-loop and closed-loop control functions for Line Modules, Motor Modules, Power Modules and other system components connected by DRIVE-CLiQ.

© Siemens 2024

Overview

Drive objects

A drive object is a self-contained software function with its own parameters and, where appropriate, its own fault messages and alarms.

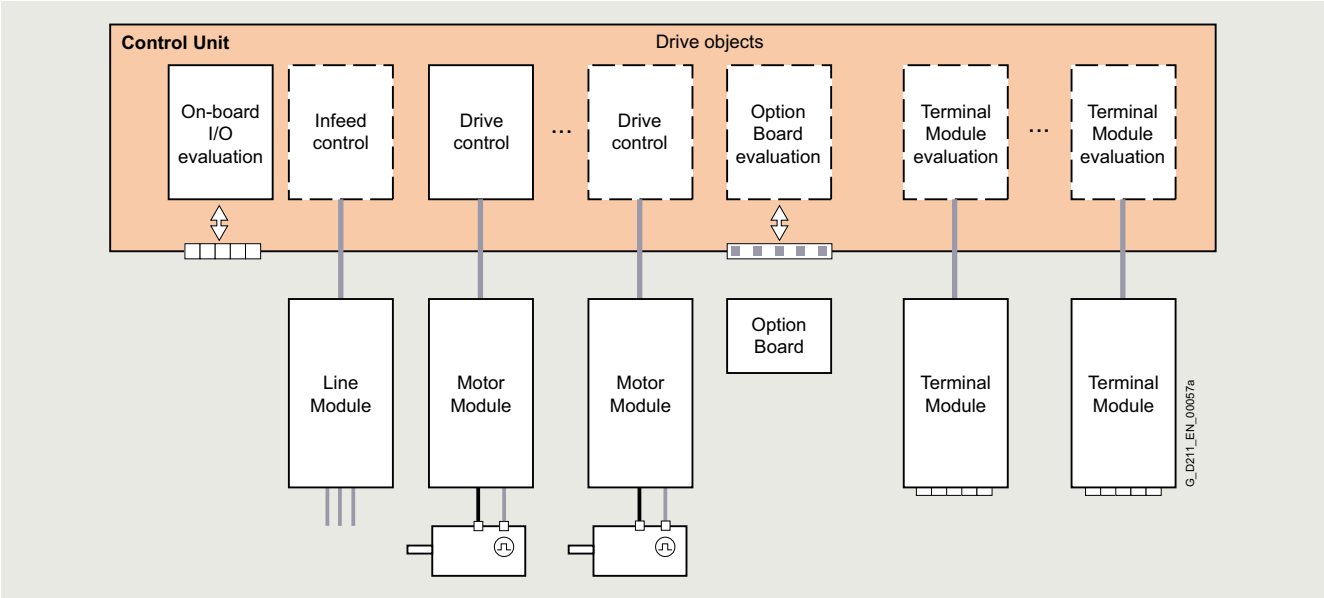

Comprehensive package of open-loop and closed-loop control functions

A wide variety of standard functions such as setpoint input, data set changeover, controller optimization, kinetic buffering, etc. ensure a high degree of functional reliability and excellent flexibility when addressing the application.

Overview of key open-loop and closed-loop control functions

	Closed-loop control types S120	Open-loop control types S120	Main functions S120 for booksize/chassis	Comment, note
Infeed Control	• Chassis - Current control with VSM10 - V_{DC} control with VSM10 - Network functionalities (island grids)	• Booksize/chassis - Basic Mode Rectification only - Smart Mode Rectification and regenerative feedback	• Mains identification • Controller optimization • Harmonics filter • Automatic restart	The VSM10 is the Voltage Sensing Module; "current" is the line current; 3-phase with line frequency
Vector control	• Induction motor - Torque control with/without encoder - Speed control with/without encoder • Torque motor - Torque control with encoder - Speed control with/without encoder • Induction motor, torque motor - Position control with encoder • Reluctance motor - Torque control with/without encoder - Speed control with/without encoder	• Linear V/f characteristic • Constant-frequency V/f characteristic (textile) • Independent voltage setpoint input	• Data set changeover • Extended setpoint input • Motor identification • Current/speed controller optimization • Technology controller • Basic positioner • Automatic restart • Flying restart with/without encoder • Kinetic buffering • Synchronization • Droop • Brake control	Mixed operation with V/f control modes is possible; it is for this reason that the V/f control modes are stored only once in the "Vector control" drive object Position control can be selected as a function module from both Servo and Vector mode Permanent-magnet 1FW4 synchronous motors can be operated over the complete operating range in Vector control.
Servo control	• Induction motor - Torque control with/without encoder - Speed control with/without encoder • Synchronous motor, linear motor and torque motor - Torque control with encoder - Speed control with encoder • All motor types - Position control with encoder	• Linear V/f characteristic • Constant-frequency V/f characteristic (textile) • Independent voltage setpoint input	• Data set changeover • Setpoint input • Motor identification • Damping application • Technology controller • Basic positioner • Brake control	Mixed operation with V/f control modes is possible; it is for this reason that the V/f control modes are stored only once in the "Vector control" drive object Position control can be selected as a function module from both Servo and Vector mode.

© Siemens 2024

Overview

Extended technology with SIMOTION

SIMOTION D Control Units support the coordinated motion control of multiple drives. Technology objects are implemented in addition to drive objects on these Control Units. These are grouped to form technology packages and make available extended Motion Control functions (e.g. synchronous operation, cam disk, path interpolation and others) or technological functions (e.g. a cam controller, a temperature or pressure control). The IEC 61131-3-compliant PLC integrated in SIMOTION D Control Units means that they are not just capable of controlling sequences of motions, but the entire machine including HMI and I/Os.

You can obtain further information about SIMOTION in SiePortal and Catalog PM 21.

BICO technology

Every drive object contains a large number of input and output variables which can be freely and independently interconnected using Binector Connector Technology (BICO). A binector is a logic signal which can assume the value 0 or 1. A connector is a numerical value, e.g. the actual speed or current setpoint.

SINAMICS Drive Control Chart (SINAMICS DCC)

SINAMICS DCC expands the scope of device functions by means of freely available closed-loop control, arithmetic and logic blocks and offers a means by which proprietary technological functions can be graphically configured in the SINAMICS drive system. In addition, local data processing in the drive supports the implementation of modular machine concepts and results in an increase in the overall machine performance.

Additional information about the Drive Control Chart (DCC) is provided in section Engineering tools.

SINAMICS Technology Extensions (SINAMICS TEC)

The SINAMICS TEC are configurable functions or Siemens technologies that can be added to extend firmware functions. The extensions implement high-performance and targeted application-specific tasks for different areas, e.g. storage and retrieval machines.

Further information about Technology Extensions (TEC) is provided in section Technology functions.

Integral safety functions (Safety Integrated)

The Control Units support comprehensive safety functions.

The integrated safety functions are the Safety Integrated Basic Functions

- STO = Safe Torque Off
- SBC = Safe Brake Control
- SS1 = Safe Stop 1 (Time controlled)

and the Safety Integrated Extended Functions that require a license

- STO = Safe Torque Off
- SS1 with SBR/SAM = Safe Stop 1 with Safe Brake Ramp/Safe Acceleration Monitor
- SS2 = Safe Stop 2
- SBC = Safe Brake Control
- SOS = Safe Operating Stop
- SLS = Safely-Limited Speed
- SSM = Safe Speed Monitor
- SDI = Safe Direction
- SLA = Safely-Limited Acceleration
- SBT = Safe Brake Test

and Safety Integrated Advanced Functions

- SLP = Safely-Limited Position
- SP = Safe Position transmission
- SCA = Safe Cam

(Abbreviations in accordance with IEC 61800-5-2)

If the integrated safety functions are used, licenses, supplementary system components such as TM54F Terminal Modules, or suitable safety controls will be necessary.

Additional information about the integrated safety functions is provided in section Safety Integrated.

Diagnostics optimally supported by trace function

The time characteristics of input and output variables associated with drive objects can be measured by the integrated trace function and displayed using the STARTER commissioning tool. Several signals can be simultaneously traced. A recording can be triggered dependent on freely selectable boundary conditions, e.g. the value of an input or output variable.

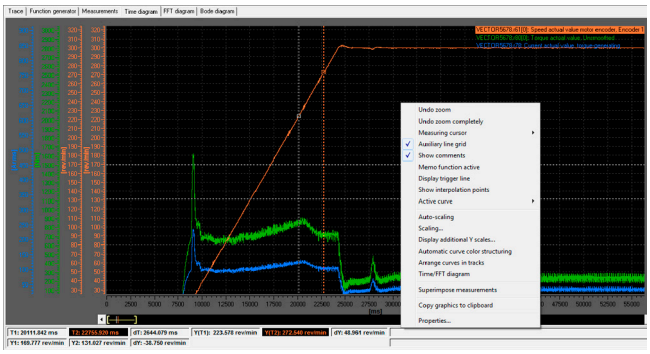

© Siemens 2024

Overview

CU320-2 PN and CU320-2 DP Control Units

The communication, open-loop and closed-loop control functions for one or more Line Modules and/or Motor Modules are executed in a CU320-2 Control Unit. The CU320-2 Control Unit is essentially designed for multi-axis operation. Communication with the higher-level control system is performed via PROFIBUS DP or PROFINET.

Design

CU320-2 Control Units feature the following interfaces as standard:

- Fieldbus interface:
  - CU320-2 PN: 1 PROFINET interface with 2 ports (RJ45 sockets) with PROFIdrive V4 profile
  - CU320-2 DP: 1 PROFIBUS interface with PROFIdrive V4 profile
- 4 x DRIVE-CLiQ sockets for communication with other DRIVE-CLiQ nodes, e.g. Motor Modules, Active Line Modules, Sensor Modules, Terminal Modules
- 12 parameterizable digital inputs (isolated)
- 8 parameterizable bidirectional digital inputs/digital output (not isolated)
- 1 serial RS 232 interface (e.g. to connect the AOP30 Advanced Operator Panel)
- 1 interface for the BOP20 Basic Operator Panel
- 1 slot for the CompactFlash card on which firmware and parameters are stored
- 1 slot for mounting an option module (e.g. TB30 Terminal Board)
- CU320-2 DP: 2 rotary coding switches for manually setting the PROFIBUS address
- 1 Ethernet interface for commissioning and diagnostics
- 3 measuring sockets and one reference ground for commissioning support
- 1 connection for the electronics power supply via the 24 V DC supply connector
- 1 PE/protective conductor connector
- 1 ground connection

A shield connection for the signal cable shield of the option module is located on the CU320-2 Control Unit.

The available option slot is used to expand the interfaces, for example, to include additional terminals or for communication purposes.

The status of the CU320-2 Control Unit is indicated via multi-color LEDs.

As the firmware and parameter settings are stored on a plug-in CompactFlash card, the Control Unit can be changed without the need for software tools.

The CU320-2 Control Unit can be mounted on the side of the Line Module via brackets integrated in a Line Module.
The CU320-2 Control Unit can also be fixed to the wall of the control cabinet using the integrated fixing lugs.

© Siemens 2024

Selection and ordering data

Description	Article No.
CU320-2 PN Control Unit Without CompactFlash card	**6SL3040-1MA01-0AA0**
CU320-2 DP Control Unit Without CompactFlash card	**6SL3040-1MA00-0AA0**
Accessories	
For CU320-2 PN: **Industrial Ethernet FC**	
• RJ45 Plug 145 (1 units)	**6GK1901-1BB30-0AA0**
• RJ45 Plug 145 (10 units)	**6GK1901-1BB30-0AB0**
• Stripping tool	**6GK1901-1GA00**
• Standard cable GP 2x2	**6XV1840-2AH10**
• Flexible cable GP 2x2	**6XV1870-2B**
• Trailing cable GP 2x2	**6XV1870-2D**
• Trailing cable 2x2	**6XV1840-3AH10**
• Marine cable 2x2	**6XV1840-4AH10**
For CU320-2 DP: **PROFIBUS connector**	
• Without PG/PC connection	**6ES7972-0BA42-0XA0**
• With PG/PC connection	**6ES7972-0BB42-0XA0**
Spacers (2 units) Increases the depth of the CU320-2 DP Control Unit to 270 mm (if the integrated brackets are not to be used, but the depth still has to be 270 mm)	**6SL3064-1BB00-0AA0**
STARTER commissioning tool [1] On DVD-ROM	**6SL3072-0AA00-0AG0**
Accessories for re-ordering	
Dust protection blanking plugs (50 units) For DRIVE-CLiQ port	**6SL3066-4CA00-0AA0**

For information on connectors and cables refer to the section MOTION-CONNECT connection system and in the internet at:
www.siemens.com/motion-connect
https://sieportal.siemens.com

Integration

DRIVE-CLiQ components, for example, Motor Modules and Active Line Modules, can be connected to a CU320-2 Control Unit. The number of modules depends on the performance required, including duty type and additional functions.

The BOP20 Basic Operator Panel can also be snapped onto the CU320-2 Control Unit during operation for diagnostic purposes.

The CU320-2 Control Unit and other connected components are commissioned and diagnosed with the STARTER commissioning tool and the installed SINAMICS Support Package or the AOP30 Advanced Operator Panel.

To operate the CU320-2 PN Control Unit, a CompactFlash card with firmware V4.4 or higher is required.

To operate the CU320-2 DP Control Unit, a CompactFlash card with firmware V4.3 or higher is required.

[1] For further information, see
https://support.industry.siemens.com/cs/document/104020669

© Siemens 2024

Integration

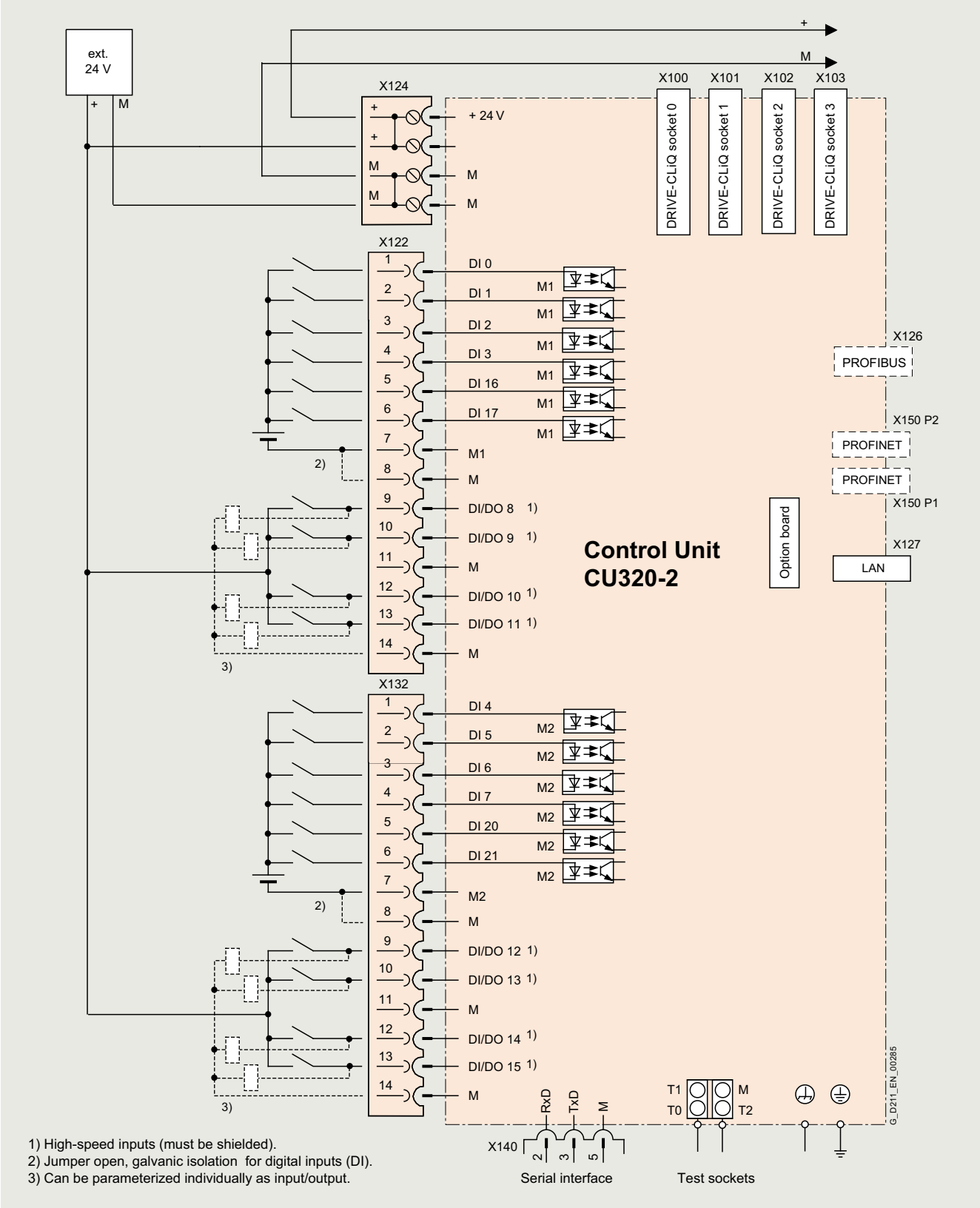

Connection example of a CU320-2 Control Unit

© Siemens 2024

Technical specifications

	CU320-2 Control Unit
PROFINET **PROFIBUS**	6SL3040-1MA01-0AA0 6SL3040-1MA00-0AA0
Power requirement, max. At 24 V DC, without taking account of digital outputs, expansion option slot and DRIVE-CLiQ supply	1.0 A
Conductor cross-section, max.	2.5 mm^2
Fuse protection, max.	20 A
Digital inputs	In accordance with IEC 61131-2 Type 1 12 isolated digital inputs 8 bidirectional non-isolated digital inputs/digital outputs
• Voltage	-3 ... +30 V
• Low level (an open digital input is interpreted as "low")	-3 ... +5 V
• High level	15 ... 30 V
• Current consumption at 24 V DC, typ.	3.5 mA
• Delay time of digital inputs [1], approx.	
- L → H	50 µs
- H → L	100 µs
• Delay time of high-speed digital inputs [1], approx.	
- L → H	5 µs
- H → L	50 µs
• Conductor cross-section, max.	1.5 mm^2
Digital outputs (continuously short-circuit proof)	8 bidirectional non-isolated digital outputs/inputs
• Voltage	24 V DC
• Load current per digital output, max.	500 mA
• Delay time [1], typ./max.	
- L → H	150 µs/400 µs
- H → L	75 µs/100 µs
• Conductor cross-section, max.	1.5 mm^2
Power loss	24 W
PE connection	M5 screw
Ground connection	M5 screw
Dimensions	
• Width	50 mm (1.97 in)
• Height	300 mm (11.8 in)
• Depth	226 mm (8.90 in)
Weight, approx.	2.3 kg (5.07 lb)

[1] The specified delay times refer to the hardware. The actual reaction time depends on the time slice in which the digital input or output is processed.

© Siemens 2024

Overview

The CompactFlash card contains the firmware and set parameters. The CompactFlash card is inserted into the appropriate slot of the CU320-2 Control Unit.

Design

A CU320-2 Control Unit can perform the communication, open-loop and closed-loop control functions for several power units. The computing capacity requirement increases in proportion to the number of power units and system components and in relation to the dynamic response required. The computing capacity requirement and utilization of the CU320-2 Control Unit can be calculated with the SIZER for Siemens Drives engineering tool (integrated in the TIA Selection Tool).
The full computing capacity of the CU320-2 Control Unit is only available on systems with performance expansion. For the CU320-2 Control Unit, the performance expansion is necessary from the 4th axis.

In addition to the firmware, the CompactFlash card also contains licensing codes which are required to enable firmware options.

In addition to the Article No., the following firmware options can currently be ordered with or without performance expansion:

- Safety Integrated Extended Functions, order code per axis **F01** to **F06**
- Safety Integrated Advanced Functions, order code per axis **A01** to **A06**
- High output frequency, order code **J01**
- DCB Extension, order code **U01**

Converter cabinets with a Control Unit already contain the CompactFlash card with the current firmware. The firmware options can be added as cabinet options.

The firmware options can also be enabled subsequently. You require the serial number of the CompactFlash card and the article number of the firmware option to be enabled. With this information, you can purchase the associated license code from a license database and enable the firmware option. The license code is only valid for the CompactFlash card declared and cannot be transferred to other CompactFlash cards.

Subsequent licensing is possible in the internet via the web license manager by generating a license key:
www.siemens.com/automation/license

Selection and ordering data

Description	Article No.
CompactFlash card for CU320-2 Control Unit without safety license	
• Without performance expansion	**6SL3054-0❑❑❑0-1BA0**
• With performance expansion firmware option	**6SL3054-0❑❑❑1-1BA0**
CompactFlash card for CU320-2 Control Unit with safety license for Extended Functions	
• For 1 axis	**6SL3054-0❑❑❑❑-1BA0-Z F01**
• For 2 axes	**6SL3054-0❑❑❑❑-1BA0-Z F02**
• For 3 axes	**6SL3054-0❑❑❑❑-1BA0-Z F03**
• For 4 axes	**6SL3054-0❑❑❑1-1BA0-Z F04**
• For 5 axes	**6SL3054-0❑❑❑1-1BA0-Z F05**
• For 6 axes	**6SL3054-0❑❑❑1-1BA0-Z F06**
CompactFlash card for CU320-2 Control Unit with/without safety license	
• With high output frequency [1]	**6SL3054-0❑❑❑❑-1BA0-Z J01**
• With DCB Extension license (firmware V4.6 and higher) (more information about DCB Extension and license upgrades can be found under Drive Control Chart (DCC) in section Tools and Engineering)	**6SL3054-0❑❑❑❑-1BA0-Z U01**
Firmware version	↑↑
V4.8	**E J**
V5.1	**F B**
V5.2	**F C**
	↑
Service Pack SP1 [2]	**1**
Service Pack SP3 [3]	**3**
	↑
Without performance expansion	**0**
With performance expansion firmware option	**1**

[1] For more information, see https://support.industry.siemens.com/cs/document/104020669

[2] Applies only to firmware version V5.1

[3] Applies only to firmware version V5.2

© Siemens 2024

Selection and ordering data

Description	Article No.
License upgrades	
Electronic Certificate of License (eCoL)	
• **Performance extension** for upgrading the license on a CompactFlash card	**6SL3074-0AA01-0AH0**
• **Safety Integrated Extended Function** License upgrade for one axis on a CompactFlash card. This option must be ordered once for each axis, e.g. a maximum of 6 for one CompactFlash card (**F01** - **F06**)	**6SL3074-0AA10-0AH0**
• **Safety Integrated Advanced Function** License upgrade for one axis on a CompactFlash card. This option must be ordered once for each axis, e.g. a maximum of 6 for one CompactFlash card (**A01** - **A06**)	**6SL3074-0AA20-0AH0**
• **High output frequency**[1)] Upgrading license to enable high output frequencies above 550 Hz for all axes on a CompactFlash card (**J01**)	**6SL3074-0AA02-0AH0**
• **SINAMICS DCB extension** Runtime license as of firmware V 4.6 for upgrading the license on a CompactFlash card (**U01**) (see Section Tools and Engineering, SINAMICS Drive Control Chart engineering software)	**6SL3077-0AA00-0AH0**
• **SINAMICS Technology Extension HEM** In the SINAMICS S120 Cabinet Modules, Heat Exchanger Modules are included.	**6SL3077-0AA05-2AH0**
• **Dynamic Grid Support** According to ALM frame size [2)]	
- Chassis With hardware version for grid converter application	**6SL3074-0AA07-0AH0**
• **Grid control for Island Grid** According to ALM power rating [2)]	
- 201 ... 350 kW Active Line Modules: 6SL3330-7TE35-0AA4	**6SL3074-0AA08-5AH0**
- 351 ... 650 kW Active Line Modules: 6SL3330-7TE41-0AA4, 6SL3335-7TG35-8AA4, 6SL3335-7TG35-8AA8	**6SL3074-0AA08-4AH0**
- 651 ... 950 kW Active Line Module: 6SL3330-7TE41-4AA4	**6SL3074-0AA08-3AH0**
- 951 ... 1250 kW Active Line Module: 6SL3330-7TG41-0AA4	**6SL3074-0AA08-2AH0**
- 1251 ... 1600 kW Active Line Modules: 6SL3330-7TG41-3AA4, 6SL3335-7TG41-3AA4, 6SL3335-7TG41-3AA8	**6SL3074-0AA08-1AH0**
- 1601 ... 2000 kW Active Line Modules: 6SL3335-7TG41-6AA4, 6SL3335-7TG41-6AA8	**6SL3074-0AA08-0AH0**

More information

A firmware version of ≥ 4.3 is required for the CU320-2 Control Unit.

The current firmware version at the time of publication of this catalog is version 5.2.

The electronic Certificate of License is the paperless delivery form for runtime options for SINAMICS and contains information about the type of rights of use purchased for the software.
The electronic Certificate of License is supplied as a PDF file via the Online Software Delivery Portal (OSD).
This enables quick notification with a download link to the email address to be stated in the order.
The Web License Manager can also be called from the OSD to assign the runtime license to a memory card.
In this case, the data of the electronic Certificate of License are automatically transferred to the Web License Manager and do not have to be entered manually.
This ensures quick availability of the license key and simple and secure handling and management of the license certificates.
You will find information on the OSD at:
https://support.industry.siemens.com/cs/ww/en/view/109759444

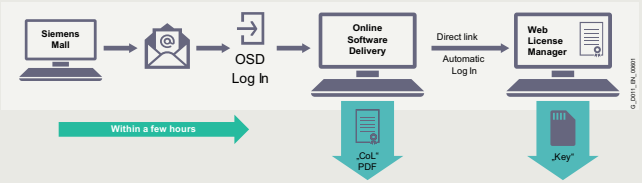

The Certificates of License are stored in directory "KEYS".

[1)] For more information, see
https://support.industry.siemens.com/cs/document/104020669

[2)] For more information, see
https://support.industry.siemens.com/cs/document/109781647

© Siemens 2024

Overview

CU310-2 PN and CU310-2 DP Control Units

The CU310-2 Control Unit for the communication and open-loop/closed-loop control functions of a Power Module is combined with the Power Module to create a powerful single drive. A PROFINET (PN) variant and a PROFIBUS (DP) variant are available for fieldbus communication.

Design

CU310-2 Control Units feature the following interfaces as standard:

- Fieldbus interface
  - CU310-2 PN:
    1 PROFINET interface with 2 ports (RJ45 sockets) with PROFIdrive V4 profile
  - CU310-2 DP:
    1 PROFIBUS interface with PROFIdrive V4 profile
- 1 DRIVE-CLiQ socket to allow communication with other DRIVE-CLiQ nodes
- 1 encoder evaluation for evaluating the following encoder signals
  - Incremental encoder TTL/HTL
  - SSI encoders without incremental signals
- 6 parameterizable digital inputs (isolated) or alternatively 3 parameterizable, fail-safe digital inputs (isolated, can be used with firmware V4.5 and higher).
  The fail-safe digital inputs can be routed, i.e. they can be routed via PROFIsafe to a higher-level controller.
- 5 parameterizable digital inputs (isolated)
- 1 digital output (isolated) or alternatively 1 parameterizable, fail-safe digital output (isolated, can be used with firmware V4.5 or higher)
- 8 parameterizable bidirectional digital inputs/digital outputs (not isolated)
- 1 analog input, either ± 10 V (resolution 12 bits + sign) or ± 20 mA (11 bits + sign)
- 1 Ethernet interface (RJ45 socket) for commissioning and diagnostics
- 1 serial RS232 interface
- 1 connection for the electronics power supply via the 24 V DC supply connector
- 1 temperature sensor input for KTY84-130, Pt1000 or PTC (Pt1000 can be used from firmware V4.7 HF17 and higher)
- 3 measuring sockets and one reference ground for commissioning support
- 1 slot for the CompactFlash card on which firmware and parameters are stored
- 1 PM-IF interface for communication with Power Modules in blocksize format
- 1 interface to the BOP20 Basic Operator Panel
- 1 PE/protective conductor connection

The status of the CU310-2 Control Unit is indicated via multi-color LEDs.

A BOP20 Basic Operator Panel can also be snapped directly onto the CU310-2 Control Unit for diagnostic procedures.

As the firmware and parameter settings are stored on a plug-in CompactFlash card, the Control Unit can be changed without the need for software tools.

© Siemens 2024

Selection and ordering data

Description	Article No.
CU310-2 PN Control Unit Without CompactFlash card	**6SL3040-1LA01-0AA0**
CU310-2 DP Control Unit Without CompactFlash card	**6SL3040-1LA00-0AA0**
Accessories	
For CU310-2 PN:	
Industrial Ethernet FC	
• RJ45 plug 180 (1 unit)	**6GK1901-1BB10-2AA0**
• RJ45 plug 180 (10 units)	**6GK1901-1BB10-2AB0**
• Stripping tool	**6GK1901-1GA00**
• Standard cable GP 2x2	**6XV1840-2AH10**
• Flexible cable GP 2x2	**6XV1870-2B**
• Trailing cable GP 2x2	**6XV1870-2D**
• Trailing cable 2x2	**6XV1840-3AH10**
• Marine cable 2x2	**6XV1840-4AH10**
For CU310-2 DP:	
PROFIBUS connector	
• Without PG/PC connection	**6ES7972-0BA42-0XA0**
• With PG/PC connection	**6ES7972-0BB42-0XA0**
Accessories for re-ordering	
Dust protection blanking plugs (50 units) For DRIVE-CLiQ port	**6SL3066-4CA00-0AA0**

For information on connectors and cables refer to the section MOTION-CONNECT connection system and in the internet at:
www.siemens.com/motion-connect
https://sieportal.siemens.com

Integration

Power Modules in chassis format are controlled from the CU310-2 Control Unit via the DRIVE-CLiQ interface. Sensor Modules and Terminal Modules must be connected to the free DRIVE-CLiQ sockets of the Power Module.

With the BOP20 Basic Operator Panel, parameters can be changed directly on the device. The BOP20 Basic Operator Panel can also be snapped onto the CU310-2 Control Unit during operation to perform diagnostics.

The CU310-2 Control Unit and other connected components are commissioned and diagnosed with the commissioning tools SINAMICS Startdrive or STARTER.

A CU310-2 DP Control Unit communicates with the higher-level control system using PROFIBUS and the PROFIdrive V4 profile.

A CU310-2 PN Control Unit communicates with the higher-level control system using PROFINET IO and the PROFIdrive V4 profile.

The SINAMICS S120 drive system with the CU310-2 PN Control Unit then assumes the function of a PROFINET IO device and can perform the following functions:

- PROFINET IO device
- 100 Mbps full duplex
- Supports real-time classes of PROFINET IO:
  - RT (Real-Time)
  - IRT (isochronous real-time), minimum send clock 250 µs
- Connects to controls as PROFINET IO devices using PROFIdrive compliant with Specification V4
- Standard TCP/IP communication for engineering processes using the commissioning tools SINAMICS Startdrive or STARTER
- Integrated 2-port switch with two RJ45 sockets based on the ERTEC ASIC. The optimum topology (line, star, tree) can therefore be configured without additional external switches.

A 24 V power supply must be connected to terminal X124 in order to use the digital outputs. To operate the CU310-2 Control Unit, a CompactFlash card with firmware V4.4 or higher is required.

[1] For further information, see
https://support.industry.siemens.com/cs/document/104020669

© Siemens 2024

Integration

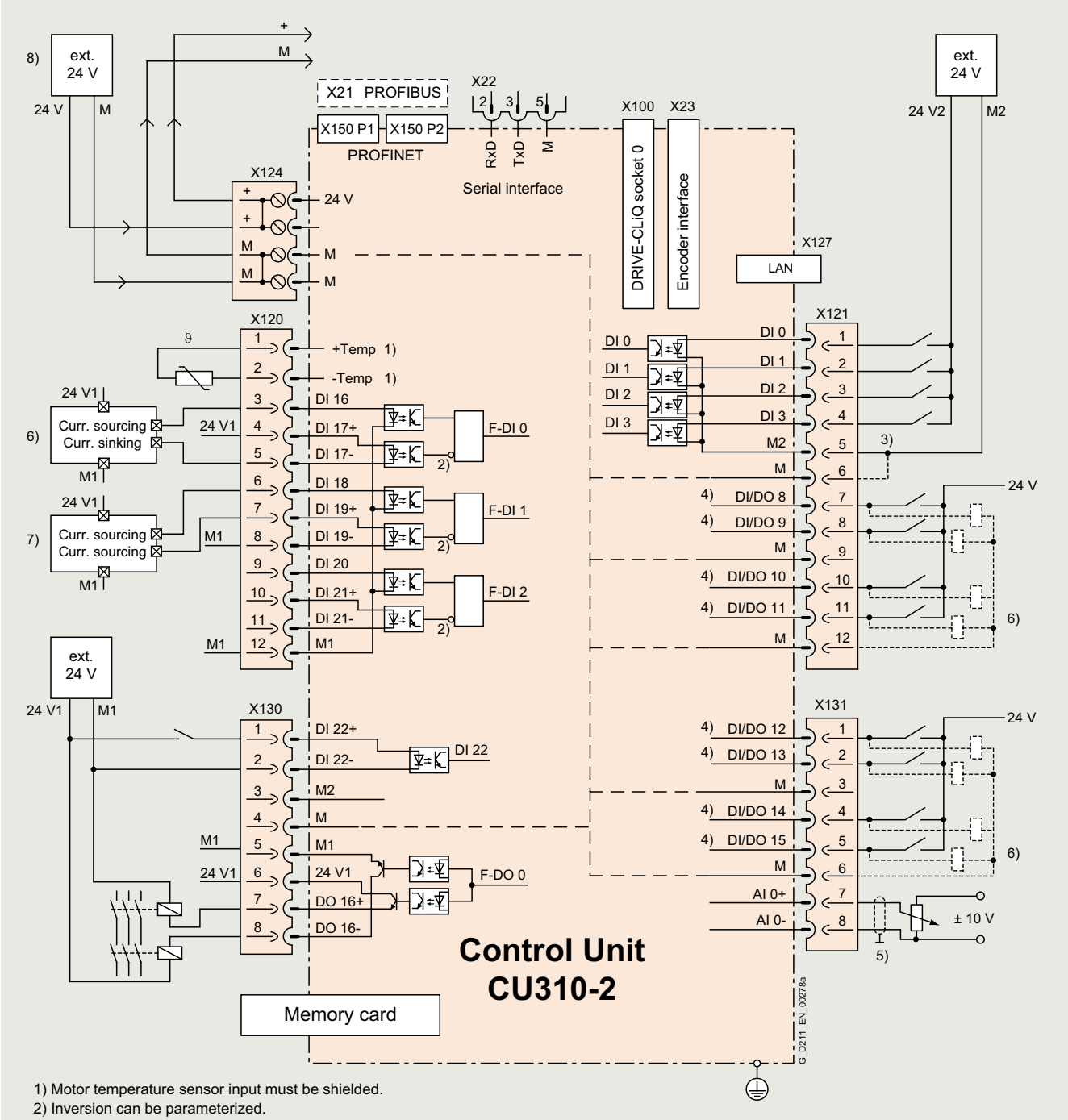

1) Motor temperature sensor input must be shielded.
2) Inversion can be parameterized.
3) Jumper open, galvanic isolation for digital inputs (DI).
4) High-speed inputs must be shielded.
5) Analog input must be shielded.
6) Safety-related control with current sourcing and current sinking outputs.
7) Safety-related control with two current sourcing outputs.
8) In order to use the digital outputs, an external 24 V power supply must be connected to terminal X124.

Connection example of CU310-2 Control Unit

© Siemens 2024

Technical specifications

	CU310-2 Control Unit
PROFINET	6SL3040-1LA01-0AA0
PROFIBUS	6SL3040-1LA00-0AA0
Power requirement, max. At 24 V DC, without taking into account the digital outputs and DRIVE-CLiQ supply	0.35 A for CU310-2 Control Unit + 0.5 A for Power Module
Conductor cross-section, max.	2.5 mm^2
Fuse protection, max.	20 A
Digital inputs	in accordance with IEC 61131-2 Type 1 5 isolated digital inputs 8 bidirectional non-isolated digital inputs/digital outputs 3 parameterizable, fail-safe digital inputs (isolated) or alternatively 6 parameterizable digital inputs (isolated)
• Voltage	-3 ... +30 V
• Low level (an open digital input is interpreted as "low")	-3 ... +5 V
• High level	15 ... 30 V
• Current consumption at 24 V DC, typ.	10 mA
• Delay time of digital inputs [1], approx.	
- L → H	50 µs
- H → L	100 µs
• Delay time of high-speed digital inputs [1], approx. (high-speed digital inputs can be used for position detection)	
- L → H	5 µs
- H → L	50 µs
• Conductor cross-section, max.	1.5 mm^2
Digital outputs (continuously short-circuit proof)	8 bidirectional non-isolated digital inputs/digital outputs
• Voltage	24 V DC
• Load current per digital output [2], max.	500 mA
• Delay time [1], typ./max.	
- L → H	150 µs/400 µs
- H → L	75 µs/100 µs
• Conductor cross-section, max.	1.5 mm^2
Analog input	1 analog input for current or voltage input, switchable
• Common mode range	±12 V
• As voltage input	-10 ... +10 V; R_i > 100 Ω Resolution: 12 bits + sign (referred to the maximum range that can be resolved -11 ... +11 V)
• As current input	-20 ... +20 mA; R_i > 250 Ω Resolution: 11 bits + sign (referred to -22 ... + 22 mA) Max. range that can be resolved: -44 ... +44 mA
Encoder evaluation	• Incremental encoder TTL/HTL • SSI encoders without incremental signals
• Input current range TTL/HTL	2 ... 10 mA (typ. 5 mA)
• Encoder supply	24 V DC / 0.35 A or 5 V DC / 0.35 A
• Encoder frequency, max.	300 kHz
• SSI baud rate	100 ... 250 kBaud
• Resolution absolute position SSI	30 bits
• Cable length, max.	
- TTL encoder	100 m (328 ft) (only bipolar signals permitted) [3]
- HTL encoder	100 m (328 ft) for unipolar signals 300 m (984 ft) for bipolar signals [3]
- SSI encoder	100 m (328 ft)
Power loss	<20 W
PE connection	M4 screw
Dimensions	
• Width	73 mm (2.87 in)
• Height	
- CU310-2 PN	191 mm (7.52 in)
- CU310-2 DP	187 mm (7.36 in)
• Depth	75 mm (2.95 in)
Weight, approx.	0.95 kg (2.09 lb)

[1] The specified delay times refer to the hardware. The actual reaction time depends on the time slice in which the digital input or output is processed.

[2] In order to use the digital outputs, an external 24 V power supply must be connected to terminal X124.

[3] Signal cables twisted in pairs and shielded.

© Siemens 2024

Overview

The CompactFlash card contains the firmware and set parameters. The CompactFlash card is plugged into the appropriate slot on the CU310-2 Control Unit.

Design

A CU310-2 Control Unit can perform the communication, open-loop and closed-loop control functions for one Power Module. The performance expansion is not required in this case.

In addition to the firmware, the CompactFlash card also contains licensing codes which are required to enable firmware options.

In addition to the Article No., the following firmware options can currently be ordered:

- Safety Integrated Extended Functions, order code **F01**
- Safety Integrated Advanced Functions, order code **A01**
- High output frequency, order code **J01**
- DCB Extension, order code **U01**

The firmware options can also be enabled subsequently. You will need the serial number of the CompactFlash card and the Article No. of the firmware option to be enabled. With this information, you can purchase the associated license code from a license database and enable the firmware option. The license code is only valid for the CompactFlash card declared and cannot be transferred to other CompactFlash cards.

Subsequent licensing is possible in the internet via the web license manager by generating a license key:
www.siemens.com/automation/license

The electronic Certificate of License is the paperless delivery form for runtime options for SINAMICS and contains information about the type of rights of use purchased for the software.
The electronic Certificate of License is supplied as a PDF file via the Online Software Delivery Portal (OSD).
This enables quick notification with a download link to the email address to be stated in the order.
The Web License Manager can also be called from the OSD to assign the runtime license to a memory card.
In this case, the data of the electronic Certificate of License are automatically transferred to the Web License Manager and do not have to be entered manually.
This ensures quick availability of the license key and simple and secure handling and management of the license certificates.
You will find information on the OSD at:
https://support.industry.siemens.com/cs/ww/en/view/109759444

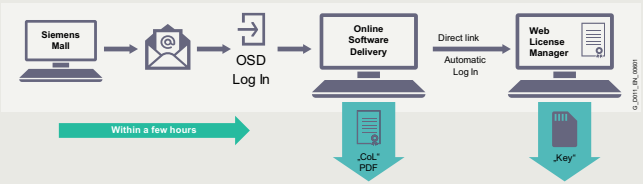

The Certificates of License are stored in directory "KEYS".

Selection and ordering data

Description	Article No.
CompactFlash card for CU310-2 Control Units without safety license	**6SL3054-0❑❑00-1BA0**
CompactFlash card for CU310-2 Control Units with safety license • including Certificate of License	**6SL3054-0❑❑00-1BA0-Z F01**
CompactFlash card for CU310-2 Control Units with/without safety license	
• With high output frequency [1]	**6SL3054-0❑❑❑0-1BA0-Z J01**
• With DCB Extension license (firmware V4.6 and higher) (further information about DCB Extension and license upgrades can be found under Drive Control Chart (DCC) in section Tools and Engineering)	**6SL3054-0❑❑❑0-1BA0-Z U01**
Firmware version	↑↑
V4.8	**E J**
V5.1	**F B**
V5.2	**F C**
	↑
Service Pack SP1 [2]	**1**
Service Pack SP3 [3]	**3**
License upgrades	
Electronic Certificate of License (eCoL)	
• **Safety Integrated Extended Functions** including Certificate of License Upgrading license for one axis on a CompactFlash card	**6SL3074-0AA10-0AH0**
• **Safety Integrated Advanced Functions** including Certificate of License Upgrading license for one axis on a CompactFlash card	**6SL3074-0AA20-0AH0**
• **High output frequency** [1] Upgrading license to enable high output frequencies above 550 Hz for all axes on a CompactFlash card	**6SL3074-0AA02-0AH0**
• **SINAMICS Technology Extension HEM** In the SINAMICS S120 Cabinet Modules, Heat Exchanger Modules are included.	**6SL3077-0AA05-2AH0**

[1] For more information, see
https://support.industry.siemens.com/cs/document/104020669

[2] Applies only for firmware version V5.1

[3] Applies only for firmware version V5.2

© Siemens 2024

BOP20 Basic Operator Panel

Overview

BOP20 Basic Operator Panel

Parameters can be set, diagnostics information (e.g. alarm and fault messages) read out and faults acknowledged using the BOP20 Basic Operator Panel.

Design

The BOP20 Basic Operator Panel has a backlit two-line display area with six keys.

The integrated plug connector on the rear of the BOP20 Basic Operator Panel provides its power and establishes communication with the Control Unit.

Selection and ordering data

Description	Article No.
BOP20 Basic Operator Panel	**6SL3055-0AA00-4BA0**

Integration

The BOP20 Basic Operator Panel can be inserted on the following Control Units:

- SINAMICS S120
  - CU310-2
  - CU320-2

CU310-2 PN Control Unit with inserted BOP20 Basic Operator Panel

CU320-2 PN Control Unit with inserted BOP20 Basic Operator Panel

© Siemens 2024

Overview

The AOP30 Advanced Operator Panel is an input/output device for converters of the SINAMICS series, preferably for cabinet installation.

It has the following characteristics:

- Graphical backlit LCD display for plain text display and a bar display of process variables
- LEDs for display of the operating states
- Help function describing causes of and remedies for faults and alarms
- Keypad for operational control of a drive
- Local/remote switchover for selecting the operating location (control priority assigned to operator panel or customer terminal strip/communication channel)
- Numeric keypad for input of setpoint or parameter values
- Function keys for guided navigation in the menu
- Two-stage safety concept to protect against accidental or unauthorized changes to settings.
  - Operation of the drive from the operator panel can be disabled by the keyboard lock so that only parameter values and process variables can be displayed on the operator panel.
  - A password can be used to prevent the unauthorized modification of converter parameters.
- Front panel with degree of protection IP55

The AOP30 and SINAMICS drive communicate via the RS232 serial interface with PPI protocol.

The AOP30 may be omitted if the drive is only operated via PROFIBUS, for example, and no local display is required on the cabinet. The AOP30 can then be used simply for commissioning purposes and to obtain diagnostic information, in which case, it is plugged into the RS232 interface on the CU320-2 Control Unit. In this case, an external 24 V power supply (max. current requirement 200 mA) is required.

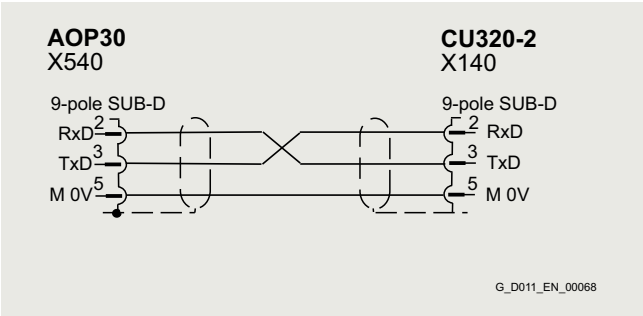

Assignment of the serial plug-in cable

Design

The AOP30 is an operator panel with graphical display and membrane keyboard. The device can be installed in a cabinet door which is between 2 mm and 4 mm thick.

Features:

- Display with green backlighting, resolution 240 × 64 pixels
- Membrane keyboard with 26 keys
- Connection for a 24 V power supply
- RS232 interface
- Time and date memory with internal battery backup
- 4 LEDs to indicate the operating state of the drive:
  - RUN green
  - ALARM yellow
  - FAULT red
  - Local/Remote green

Selection and ordering data

Description	Article No.
AOP30 Advanced Operator Panel	**6SL3055-0AA00-4CA5**
Accessories	
RS232 plug-in cable for connecting the AOP30 to the CU320-2	
1 m (3.28 ft) long	**6FX8002-1AA01-1AB0**
2 m (6.56 ft) long	**6FX8002-1AA01-1AC0**
3 m (9.84 ft) long	**6FX8002-1AA01-1AD0**
4 m (13.1 ft) long	**6FX8002-1AA01-1AE0**
5 m (16.41 ft) long	**6FX8002-1AA01-1AF0**
6 m (19.7 ft) long	**6FX8002-1AA01-1AG0**
7 m (23.0 ft) long	**6FX8002-1AA01-1AH0**
8 m (26.2 ft) long	**6FX8002-1AA01-1AJ0**
9 m (29.5 ft) long	**6FX8002-1AA01-1AK0**
10 m (32.8 ft) long	**6FX8002-1AA01-1BA0**

For the SINAMICS S120 Cabinet Modules, the AOP30 can be ordered as an option by specifying order code **K08**.

For SINAMICS G150 and SINAMICS S150, the AOP30 Advanced Operator Panel is installed in the cabinet door as standard.

© Siemens 2024

Function

The current operating states, setpoints and actual values, parameters, indices, faults and alarms are displayed on the display panel.

German, English, French, Italian, Spanish and Chinese are stored on the CU320-2 Control Unit CompactFlash card as operator panel languages. The desired language must be downloaded to the AOP30 prior to commissioning.

In addition to these preinstalled languages, **Russian** and **Portuguese** (Brazil) are also available for subsequent installation.
Further languages are available on request.

Integration

If one CU320-2 Control Unit controls several power units (multi-motor drives) in the SINAMICS S120 drive system, the parameters, alarms and faults of all the connected devices can be simultaneously displayed and processed on the AOP30 Advanced Operator Panel.

Technical specifications

	AOP30 Advanced Operator Panel 6SL3055-0AA00-4CA5
Power supply	24 V DC (20.4 ... 28.8 V DC)
Current requirement • Without backlighting • For max. backlighting	 <100 mA < 200 mA
Data interface	RS232 interface, PPI protocol
Backup battery	3 V lithium CR2032
Operating temperature	0 ... 55 °C (32...131 °F)
Storage and transport temperature	-25 ... +70 °C (-13 ... +158 °F)
Degree of protection	IP20 for the inside of the cabinet IP55 for the outside of the cabinet
Dimensions • Width • Height • Depth	 212 mm (8.35 in) 156 mm (6.14 in) 31 mm (1.22 in)
Weight, approx.	0.55 kg (1.21 lb)
Certificate of suitability	cULus

© Siemens 2024

Overview

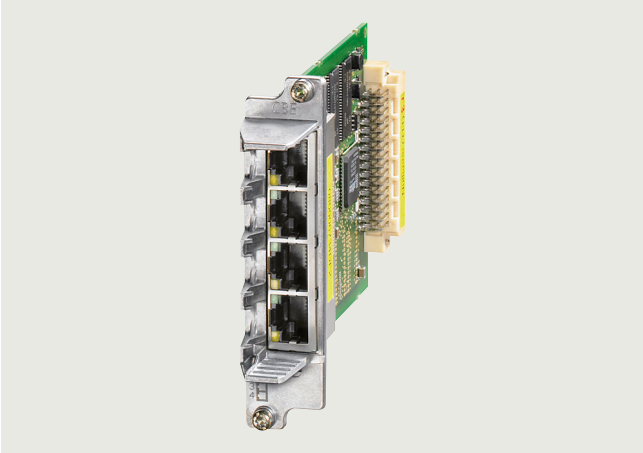

CBE20 Communication Board

The CBE20 Communication Board can be used to connect to a PROFINET IO network via a CU320-2 Control Unit.

The SINAMICS S120 or SINAMICS S150 drive system then assumes the function of a PROFINET IO device and can perform the following functions:

- PROFINET IO device
- 100 Mbps full duplex
- Supports real-time classes of PROFINET IO:
  - RT (Real-Time)
  - IRT (Isochronous Real-Time), minimum send cycle 500 µs
- Connection to control systems as PROFINET IO devices in accordance with PROFIdrive, Specification V4
- Standard TCP/IP communication for engineering processes using the Startdrive or STARTER commissioning tools
- Integrated 4-port switch with four RJ45 sockets based on the PROFINET ASIC ERTEC400. The optimum topology (line, star, tree) can therefore be configured without additional external switches
- Supports the functions "media redundancy" and "shared device"

The CBE20 Communication Board is required if:

- a SINAMICS S120 or SINAMICS S150 converter with a CU320-2 DP Control Unit (PROFIBUS) should be connected to a PROFINET-IO network
- SINAMICS Link is to be used to directly exchange data between several CU320-2 DP (PROFIBUS) or CU320-2 PN (PROFINET) Control Units without using a higher-level control system
- EtherNet/IP in a CU320-2 DP should be used
- Modbus TCP in a CU320-2 DP should be supported

Selection and ordering data

Description	Article No.
CBE20 Communication Board	**6SL3055-0AA00-2EB0**
Accessories	
Industrial Ethernet FC	
• RJ45 Plug 180 (1 unit)	**6GK1901-1BB10-2AA0**
• RJ45 Plug 180 (10 units)	**6GK1901-1BB10-2AB0**
• Stripping tool	**6GK1901-1GA00**
• Standard cable GP 2x2	**6XV1840-2AH10**
• Flexible cable GP 2x2	**6XV1870-2B**
• Trailing cable GP 2x2	**6XV1870-2D**
• Trailing cable 2x2	**6XV1840-3AH10**
• Marine cable 2x2	**6XV1840-4AH10**

For the SINAMICS G150, SINAMICS S150 and SINAMICS S120 Cabinet Modules, the CBE20 Communication Board can be ordered as an option by specifying order code **G33**.

For information on connectors and cables refer to the section MOTION-CONNECT connection system and in the internet at:
www.siemens.com/motion-connect
https://sieportal.siemens.com

Integration

The CBE20 Communication Board plugs into the option slot on the CU320-2 Control Unit.

SINAMICS Link

SINAMICS Link can be used to directly exchange data between several CU320-2 DP (PROFIBUS) or CU320-2 PN (PROFINET) Control Units without using a higher-level control system. In this case, the CBE20 Communication Board is required. Possible applications for the SINAMICS Link include:

- Torque distribution for several drives
- Setpoint cascading for several drives
- Load distribution for drives coupled through a material web
- Couplings between SINAMICS G or SINAMICS S with the CU320-2 Control Unit and SINAMICS DC Master with CUD Control Units.

Participants other than CU320-2 Control Units and/or CUD Control Units of the SINAMICS DC Master cannot be integrated into this communication.

SINAMICS Link is activated by appropriately parameterizing the Control Units of the participants.

Technical specifications

	CBE20 Communication Board 6SL3055-0AA00-2EB0
Current requirement at 24 V DC	0.16 A
Power loss	2.4 W
Weight, approx.	0.1 kg (0.22 lb)
Certificate of suitability	cULus

© Siemens 2024

DMC20 DRIVE-CLiQ Hub Module

Overview

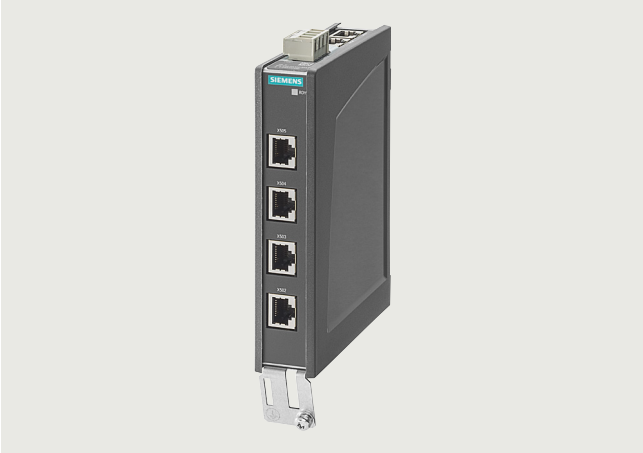

DMC20 DRIVE-CLiQ Hub Module

The DMC20 DRIVE-CLiQ Hub Module is used to implement a star-shaped topology of a DRIVE-CLiQ line. Two DMC20 DRIVE-CLiQ Hub Modules can be connected in series (cascaded).

Design

The DMC20 DRIVE-CLiQ Hub Module in degree of protection IP20 is designed for mounting in control cabinets.

The following are located on the DMC20 DRIVE-CLiQ Hub Module:

- 6 DRIVE-CLiQ sockets for connecting 5 DRIVE-CLiQ devices
- 1 connection for the electronics power supply via the 24 V DC supply connector

The status of the DMC20 DRIVE-CLiQ Hub Module is indicated via a multi-color LED.

The DMC20 DRIVE-CLiQ Hub Module can be snapped onto a TH 35 standard mounting rail according to EN 60715 (IEC 60715).

Selection and ordering data

Description	Article No.
DMC20 DRIVE-CLiQ Hub Module Without DRIVE-CLiQ cable	**6SL3055-0AA00-6AA1**
Accessories for re-ordering	
Dust protection blanking plugs (50 units) For DRIVE-CLiQ port	**6SL3066-4CA00-0AA0**

Technical specifications

	DMC20 DRIVE-CLiQ Hub Module 6SL3055-0AA00-6AA1
Power requirement, max. at 24 V DC without DRIVE-CLiQ supply	0.15 A
• Conductor cross-section, max.	2.5 mm^2
Degree of protection	IP20
Dimensions	
• Width	30 mm (1.18 in)
• Height	151 mm (5.94 in)
• Depth	110 mm (4.33 in)
Weight, approx.	0.36 kg (0.79 lb)
Certificate of suitability	cULus

© Siemens 2024

Integration

Signals from more than one encoder can be collected with one DRIVE-CLiQ Hub Module and forwarded to the Control Unit through a single DRIVE-CLiQ cable.

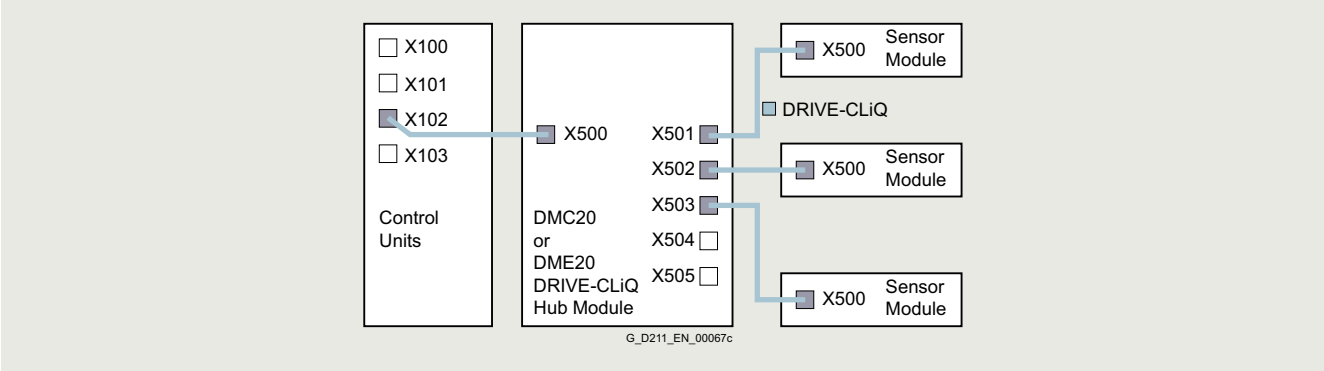

With a DRIVE-CLiQ Hub Module, individual DRIVE-CLiQ nodes can be removed without interrupting the data exchange with the remaining devices in the DRIVE-CLiQ line.

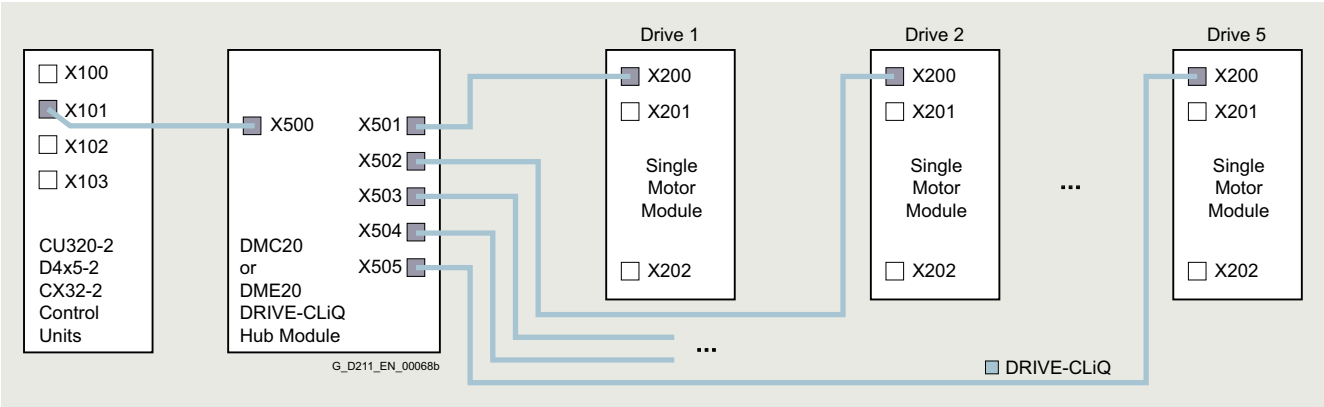

© Siemens 2024

DME20 DRIVE-CLiQ Hub Module

Overview

DME20 DRIVE-CLiQ Hub Module

The DME20 DRIVE-CLiQ Hub Module is used to implement a star-shaped topology of a DRIVE-CLiQ line. Two DME20 DRIVE-CLiQ Hub Modules can be connected in series (cascaded).

Design

The following are located on the DME20 DRIVE-CLiQ Hub Module:

- 6 DRIVE-CLiQ sockets for connecting 5 DRIVE-CLiQ devices
- 1 connection for the electronics power supply via the 24 V DC circular supply connector with conductor cross-section 4 × 0.75 mm^2 (pins 1+2 internally bridged; pins 3+4 internally bridged)

The scope of supply of the DME20 DRIVE-CLiQ Hub Modules includes:

- 6 blanking plugs for sealing unused DRIVE-CLiQ sockets

Selection and ordering data

Description	Article No.
DME20 DRIVE-CLiQ Hub Module Without DRIVE-CLiQ cable; without electronics power supply cable and circular connector for 24 V DC	**6SL3055-0AA00-6AB0**
Accessories	
24 V DC power supply cable	Ordering and delivery Phoenix Contact www.phoenixcontact.de
• Shielded connector, 5-pole, can be assembled by the user	1508365
• Unshielded connector, 4-pole, can be assembled by the user, Speedcon rapid interlock	1521601
Accessories for re-ordering	
SINAMICS dust-proof blanking plugs IP67 (6 units) For DRIVE-CLiQ port	**6SL3066-4CA01-0AA0**

Technical specifications

	DME20 DRIVE-CLiQ Hub Module 6SL3055-0AA00-6AB0
Power requirement, max. at 24 V DC without DRIVE-CLiQ supply	0.15 A
• Conductor cross-section, max.	4 × 0.75 mm^2
Degree of protection	IP67
Dimensions	
• Width	99 mm (3.90 in)
• Height	149 mm (5.87 in)
• Depth	55.7 mm (2.19 in) (without connector)
Weight, approx.	0.8 kg (1.76 lb)
Certificate of suitability	cULus

© Siemens 2024

Integration

Signals from more than one encoder can be collected with one DRIVE-CLiQ Hub Module and forwarded to the Control Unit through a single DRIVE-CLiQ cable.

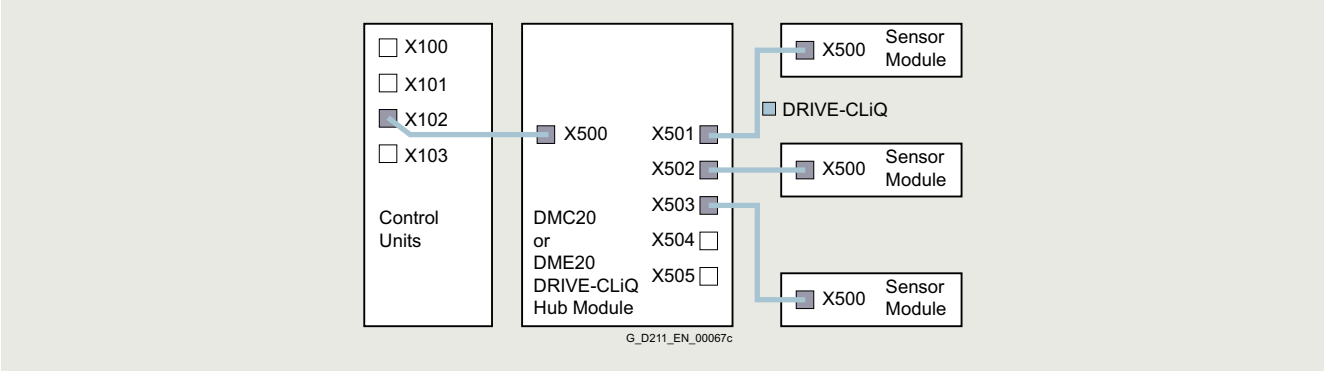

With a DRIVE-CLiQ Hub Module, individual DRIVE-CLiQ nodes can be removed without interrupting the data exchange with the remaining devices in the DRIVE-CLiQ line.

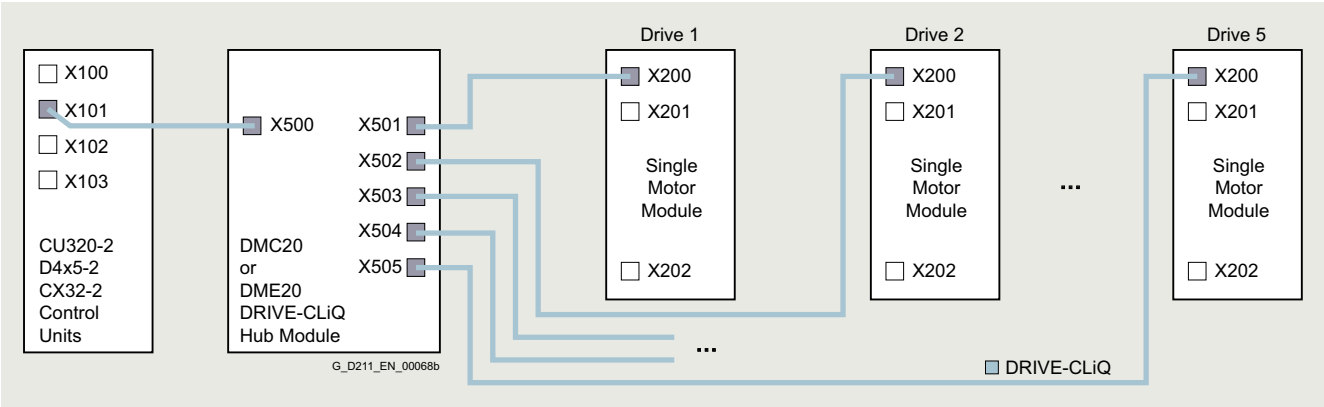

The DME20 DRIVE-CLiQ Hub Module in degree of protection IP67 is suitable for installation outside control cabinets.

© Siemens 2024

TB30 Terminal Board

Overview

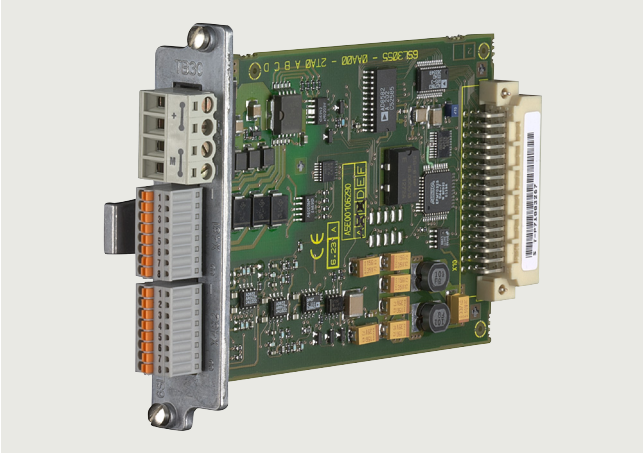

TB30 Terminal Board

The TB30 Terminal Board supports the addition of digital inputs/digital outputs and analog inputs/analog outputs to a Control Unit.

Design

The following are located on the TB30 Terminal Board:

- Power supply for digital inputs/digital outputs
- 4 digital inputs
- 4 digital outputs
- 2 analog inputs
- 2 analog outputs

A shield connection for the signal cable shield is located on the Control Unit.

Selection and ordering data

Description	Article No.
TB30 Terminal Board	**6SL3055-0AA00-2TA0**

For the SINAMICS G150, SINAMICS S150 and SINAMICS S120 Cabinet Modules, the TB30 Terminal Board can be ordered as an option by specifying order code **G62**.

Technical specifications

	TB30 Terminal Board 6SL3055-0AA00-2TA0
Power requirement, max. at 24 V DC via Control Unit CU320-2 without taking account of digital outputs	0.05 A
• Conductor cross-section, max.	2.5 mm²
• Fuse protection, max.	20 A
Digital inputs In accordance with IEC 61131-2 Type 1	
• Voltage	-3 ... +30 V
• Low level (an open digital input is interpreted as "low")	-3 ... +5 V
• High level	15 ... 30 V
• Current consumption at 24 V DC, typ.	6 mA
• Delay time of digital inputs [1], approx.	
- L → H	50 µs
- H → L	100 µs
• Conductor cross-section, max.	0.5 mm²
Digital outputs (continuously short-circuit proof)	
• Voltage	24 V DC
• Load current per digital output, max.	500 mA
• Delay time of digital outputs [1], approx.	150 µs
• Conductor cross-section, max.	0.5 mm²
Analog inputs (difference)	
• Voltage range (an open analog input is interpreted as 0 V)	-10 ... +10 V
• Internal resistance R_i	65 kΩ
• Resolution [2]	13s bits + sign
• Conductor cross-section, max.	0.5 mm²
Analog outputs (continuously short-circuit proof)	
• Voltage range	-10 ... +10 V
• Max. load current	-3 ... +3 mA
• Resolution	11 bits + sign
• Settling time, approx.	200 µs
• Conductor cross-section, max.	0.5 mm²
Power loss, max.	3 W
Weight, approx.	0.1 kg (0.22 lb)
Certificate of suitability	cULus

[1] The specified delay times refer to the hardware. The actual reaction time depends on the time slice in which the digital input/output is processed.

[2] If the analog input is to be operated in the signal processing sense with continuously variable input voltage, the sampling frequency $f_a = 1/t_{time\ slice}$ must be at least twice the value of the highest signal frequency f_{max}.

© Siemens 2024

Integration

The TB30 Terminal Board is inserted in the slot to optionally expand the CU320-2 Control Unit.

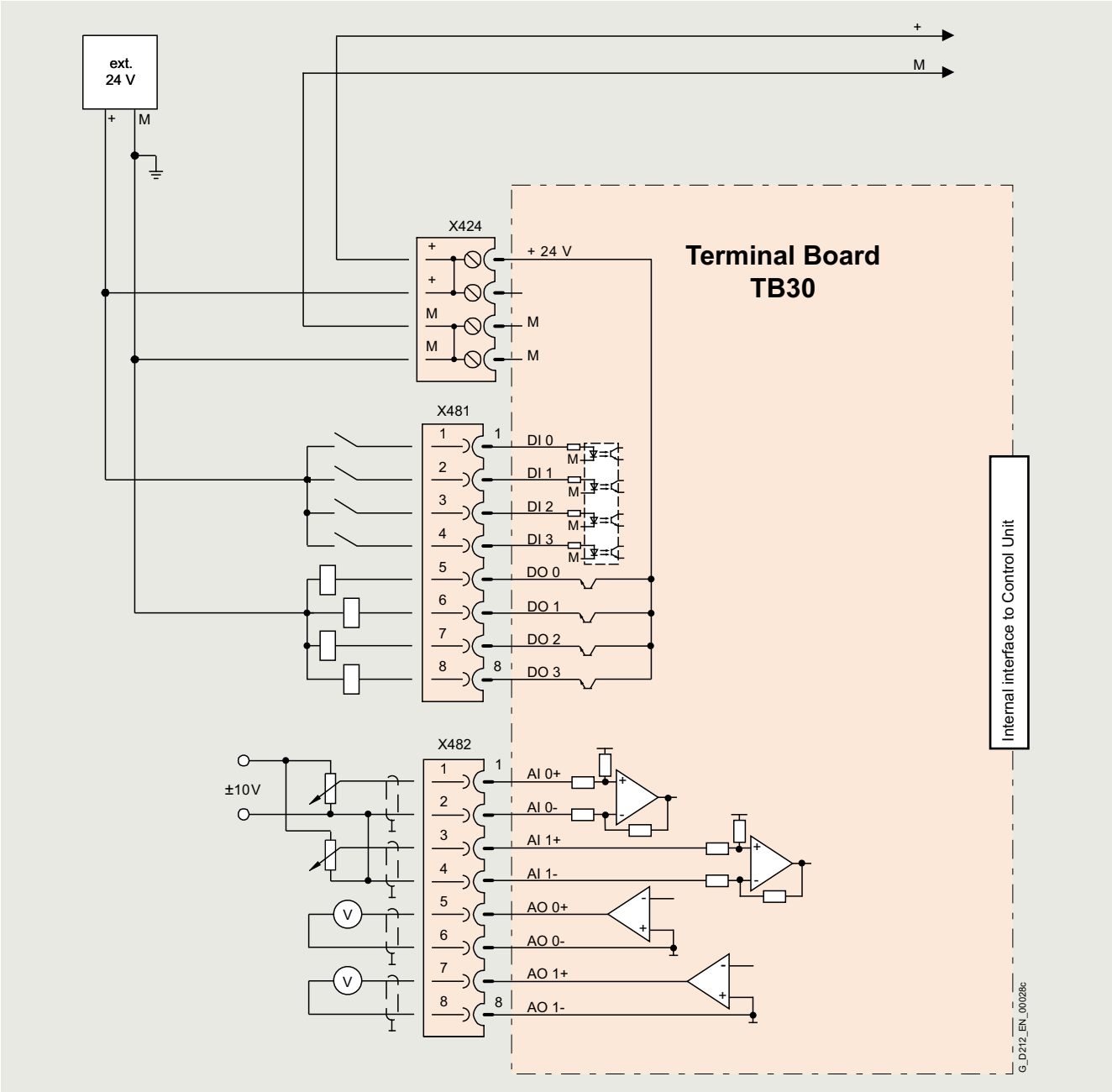

Connection example of a TB30 Terminal Board

© Siemens 2024

Overview

TM15 Terminal Module

The number of available digital inputs and outputs within a drive system can be expanded with the TM15 Terminal Module.

Design

The TM15 Terminal Module is equipped with the following:

- 24 bidirectional digital inputs/outputs (galvanic isolation in 3 groups with 8 channels per group)
- 24 green status LEDs for indicating the logical signal state of the corresponding terminal
- 2 DRIVE-CLiQ sockets
- 1 connection for the electronics power supply via the 24 V DC supply connector
- 1 PE/protective conductor connection

The status of the TM15 Terminal Module is indicated via a multi-color LED.

The TM15 Terminal Module can be snapped onto a TH 35 standard mounting rail in accordance with EN 60715 (IEC 60715).

The signal cable shield can be connected to the TM15 Terminal Module by means of a shield connection terminal, e.g. Phoenix Contact type SK8 or Weidmüller type KLBÜ CO 1. The shield connection terminal must not be used as a strain relief mechanism.

Selection and ordering data

Description	Article No.
TM15 Terminal Module Without DRIVE-CLiQ cable	**6SL3055-0AA00-3FA0**
Accessories for re-ordering	
Dust protection blanking plugs (50 units) For DRIVE-CLiQ port	**6SL3066-4CA00-0AA0**

Technical specifications

	TM15 Terminal Module 6SL3055-0AA00-3FA0
Power requirement, max. at 24 V DC without load	0.15 A
• Conductor cross-section, max.	2.5 mm^2
• Fuse protection, max.	20 A
Number of DRIVE-CLiQ sockets	2
I/O	
• Digital inputs/outputs	Parameterizable channel-by-channel as DI or DO
• Number of digital inputs/outputs	24
• Galvanic solation	Yes, in groups of 8
• Cables and connections	Plug-in screw-type terminals
• Conductor cross-section, max.	1.5 mm^2
Digital inputs	
• Voltage	-30 ... +30 V
• Low level (an open digital input is interpreted as "low")	-30 ... +5 V
• High level	15 ... 30 V
• Current consumption at 24 V DC	9 mA
• Delay times of digital inputs, typ. [1]	
- L → H	50 µs
- H → L	100 µs
Digital outputs (continuously short-circuit proof)	
• Voltage	24 V DC
• Load current per digital output, max.	0.5 A
• Delay times (resistive load) [1]	
- L → H, typ.	50 µs
- L → H, max.	100 µs
- H → L, typ.	150 µs
- H → L, max.	225 µs
• Total current of outputs (per group), max.	
- To 60 °C (140 °F)	2 A
- To 50 °C (122 °F)	3 A
- To 40 °C (104 °F)	4 A
Power loss, max.	3 W
PE connection	M4 screw
Dimensions	
• Width	50 mm (1.97 in)
• Height	150 mm (5.91 in)
• Depth	111 mm (4.37 in)
Weight, approx.	1 kg (2.20 lb)
Certificate of suitability	cULus

[1] The specified delay times refer to the hardware. The actual reaction time depends on the time slice in which the digital input/output is processed.

© Siemens 2024

Integration

The TM15 Terminal Module can communicate with the following Control Units via DRIVE-CLiQ:

- CU310-2 Control Unit
- CU320-2 Control Unit

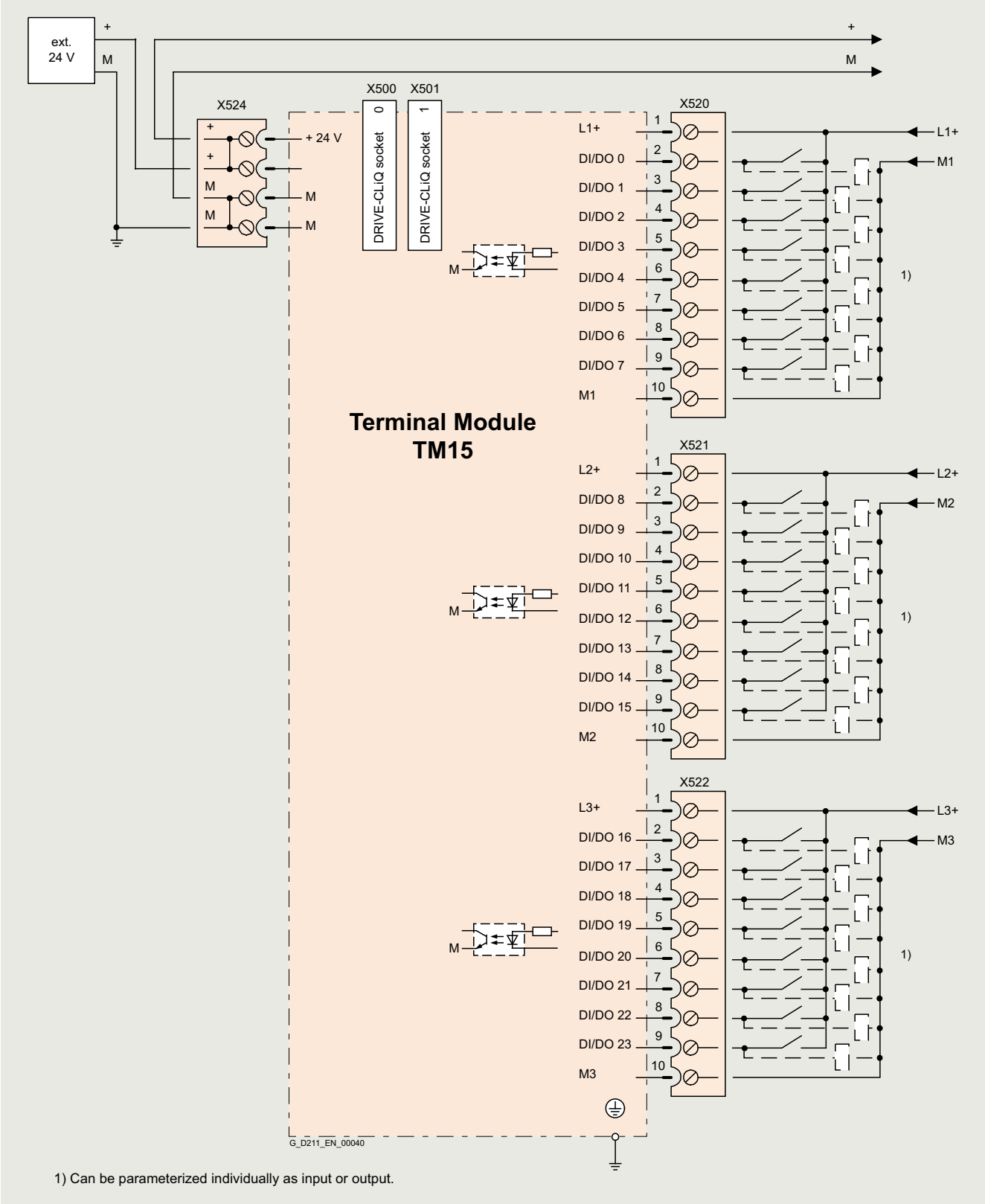

1) Can be parameterized individually as input or output.

Connection example of TM15 Terminal Module

© Siemens 2024

TM31 Terminal Module

Overview

TM31 Terminal Module

With the TM31 Terminal Module, the number of available digital inputs and outputs and the number of analog input and outputs within a drive can be expanded.

The TM31 Terminal Module also features relay outputs with changeover contact and a temperature sensor input.

Design

The following are located on the TM31 Terminal Module:

- 8 digital inputs
- 4 bidirectional digital inputs/outputs
- 2 relay outputs with changeover contact
- 2 analog inputs
- 2 analog outputs
- 1 temperature sensor input for KTY84-130, Pt1000 or PTC (Pt1000 can be used from firmware V4.7 HF17 and higher)
- 2 DRIVE-CLiQ sockets
- 1 connection for the electronics power supply via the 24 V DC supply connector
- 1 PE/protective conductor connection

The status of the TM31 Terminal Module is indicated via a multi-color LED.

The TM31 Terminal Module can be snapped onto a TH 35 standard mounting rail in accordance with EN 60715 (IEC 60715).

The signal cable shield can be attached to the TM31 Terminal Module via a shield connection terminal, e.g. type SK8 supplied by Phoenix Contact or type KLBÜ CO 1 supplied by Weidmüller. The shield connection terminal must not be used as a strain relief mechanism.

Selection and ordering data

Description	Article No.
TM31 Terminal Module Without DRIVE-CLiQ cable	**6SL3055-0AA00-3AA1**
Accessories for re-ordering	
Dust protection blanking plugs (50 units) For DRIVE-CLiQ port	**6SL3066-4CA00-0AA0**

For the SINAMICS S150 and SINAMICS S120 Cabinet Modules, the TM31 Terminal Module can be ordered as an option by specifying order code **G60** or **G61**.

© Siemens 2024

Technical specifications

	TM31 Terminal Module 6SL3055-0AA00-3AA1
Power requirement, max. At 24 V DC without taking account of the digital outputs and DRIVE-CLiQ supply	0.5 A
• Conductor cross-section, max.	2.5 mm²
• Fuse protection, max.	20 A
Digital inputs In accordance with IEC 61131-2 Type 1	
• Voltage	-3 ... +30 V
• Low level (an open digital input is interpreted as "low")	-3 ... +5 V
• High level	15 ... 30 V
• Current consumption at 24 V DC, typ.	9 mA
• Delay times of digital inputs [1], approx.	
- L → H	50 µs
- H → L	100 µs
• Conductor cross-section, max.	1.5 mm²
Digital outputs (continuously short-circuit proof)	
• Voltage	24 V DC
• Load current per digital output, max.	100 mA
• Total current of digital outputs, max.	400 mA
• Delay times of digital outputs [1]	
- Typ.	150 µs with 0.5 A resistive load
- Max.	500 µs
• Conductor cross-section, max.	1.5 mm²
Analog inputs a switch is used to toggle between voltage and current input	
• As voltage input	
- Voltage range	-10 ... +10 V
- Internal resistance R_i	100 kΩ
- Resolution [2]	11 bits + sign
• As current input	
- Current ranges	4 ... 20 mA, -20 ... +20 mA, 0 ... 20 mA
- Internal resistance R_i	250 Ω
- Resolution [2]	10 bits + sign
• Conductor cross-section, max.	1.5 mm²

	TM31 Terminal Module 6SL3055-0AA00-3AA1
Analog outputs (continuously short-circuit proof)	
• Voltage range	-10 ... +10 V
• Max. load current	-3 ... +3 mA
• Current ranges	4 ... 20 mA, -20 ... +20 mA, 0 ... 20 mA
• Load resistance, max.	500 Ω in the range -20 ... +20 mA
• Resolution	11 bits + sign
• Conductor cross-section, max.	1.5 mm²
Relay outputs CO contacts	
• Max. load current	8 A
• Operational voltage, max.	250 V AC, 30 V DC
• Switching capacity, max.	
- At 250 V AC	2000 VA (cos φ = 1) 750 VA (cos φ = 0.4)
- At 30 V DC	240 W (resistive load)
• Required minimum current	100 mA
• Conductor cross-section, max.	2.5 mm²
Power loss, max.	10 W
PE connection	M4 screw
Dimensions	
• Width	50 mm (1.97 in)
• Height	150 mm (5.91 in)
• Depth	111 mm (4.37 in)
Weight, approx.	0.49 kg (1.08 lb)
Certificate of suitability	cULus

[1] The specified delay times refer to the hardware. The actual reaction time depends on the time slice in which the digital input/output is processed.

[2] If the analog input is to be operated in the signal processing sense with continuously variable input voltage, the sampling frequency $f_a = 1/t_{\text{time slice}}$ must be at least twice the value of the highest signal frequency f_{max}.

© Siemens 2024

Integration

The TM31 Terminal Module can communicate via DRIVE-CLiQ with the following Control Units.

- CU310-2 Control Unit
- CU320-2 Control Unit

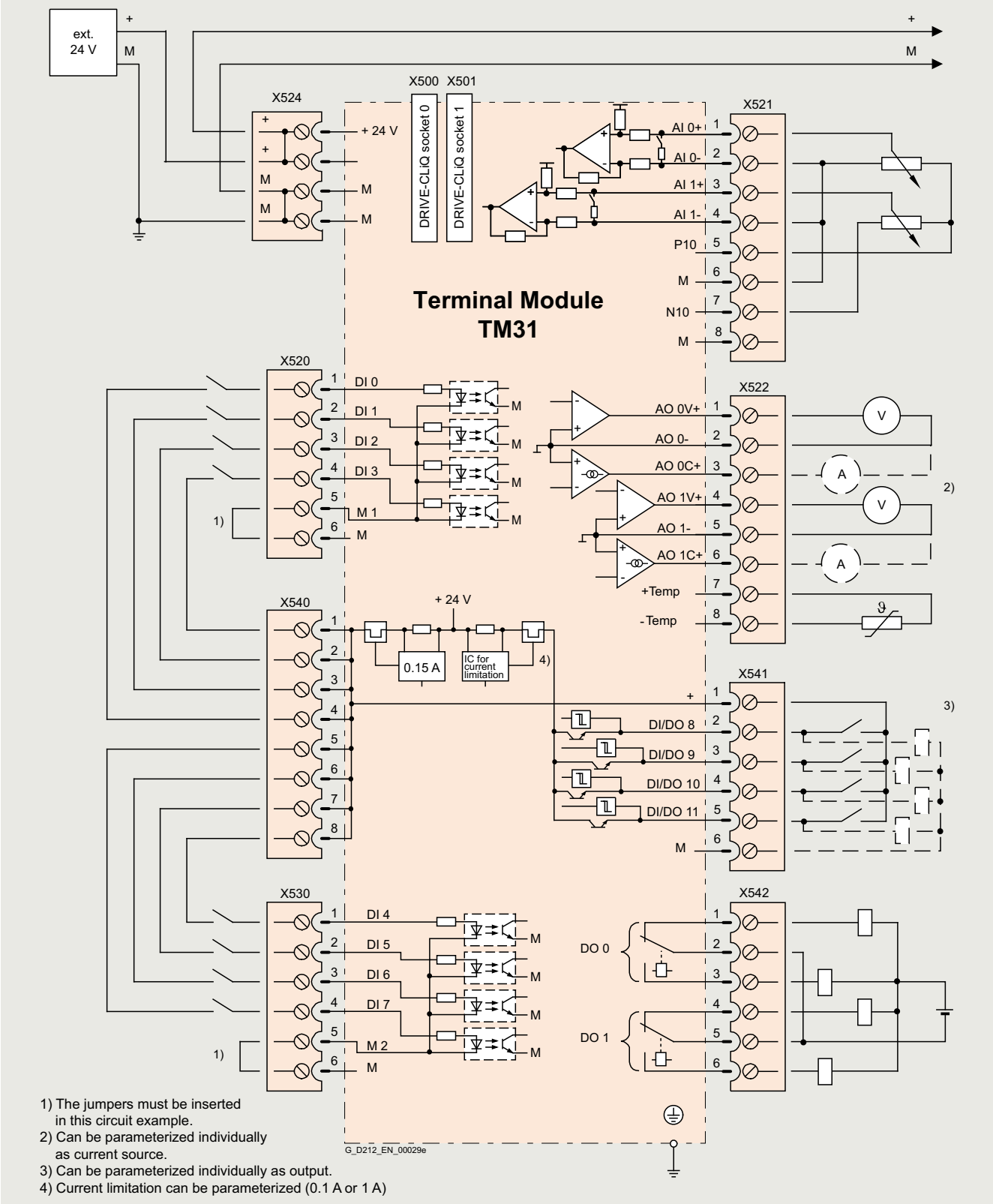

1) The jumpers must be inserted in this circuit example.
2) Can be parameterized individually as current source.
3) Can be parameterized individually as output.
4) Current limitation can be parameterized (0.1 A or 1 A)

Connection example of TM31 Terminal Module

© Siemens 2024

Overview

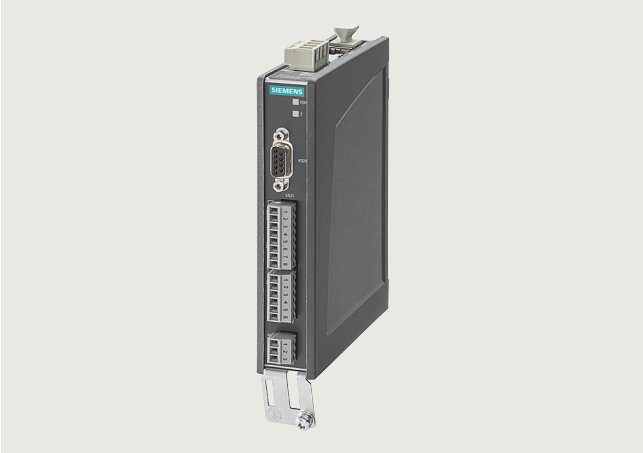

TM41 Terminal Module

The TM41 Terminal Module supplies TTL signals which emulate an incremental encoder, e.g. to a higher-level control.
The encoder interface (incremental encoder emulation) can be linked to an encoder signal from the Control Unit, e.g. incremental encoder sin/cos, by parameter assignment.

The TM41 Terminal Module increases the number of digital inputs/outputs and analog inputs that are available in the drive system.

Design

The following are located on the TM41 Terminal Module:

- 4 bidirectional digital inputs/outputs
- 4 digital inputs (with galvanic isolation)
- 1 analog input
- 1 interface for emulation of TTL incremental encoder (RS422)
- 1 LED for signaling zero mark detection for encoder interface
- 2 DRIVE-CLiQ sockets
- 1 connection for the electronics power supply and to supply the digital outputs via the 24 V DC supply connector
- 1 PE/protective conductor connection

The status of the TM41 Terminal Module is indicated via a multi-color LED.
An LED next to the interface for TTL pulse encoder emulation is illuminated as soon as a zero mark is detected.

The TM41 Terminal Module can be snapped onto a TH 35 standard mounting rail in accordance with EN 60715 (IEC 60715).

The signal cable shield can be attached to the TM41 Terminal Module via a shield connection terminal, e.g. type SK8 supplied by Phoenix Contact or type KLBÜ CO 1 supplied by Weidmüller. The shield connection terminal must not be used as a strain relief mechanism.

Selection and ordering data

Description	Article No.
TM41 Terminal Module Without DRIVE-CLiQ cable	**6SL3055-0AA00-3PA1**
Accessories for re-ordering	
Dust protection blanking plugs (50 units) For DRIVE-CLiQ port	**6SL3066-4CA00-0AA0**

© Siemens 2024

Technical specifications

	TM41 Terminal Module 6SL3055-0AA00-3PA1
Current requirement (X524 at 24 V DC) without DRIVE-CLiQ supply or digital outputs (X514)	0.5 A
• Conductor cross-section, max.	2.5 mm^2
• Fuse protection, max.	20 A
I/O	
• Digital inputs/outputs	Individually parameterizable as DI or DO
• Number of digital inputs/outputs	4
• Number of digital input/outputs (with galvanic isolation)	4
• Cables and connections	Plug-in screw-type terminals
• Conductor cross-section, max.	1.5 mm^2
Digital inputs	
• Voltage	
- Without galvanic isolation	-3 ... +30 V
- With galvanic isolation	-30 ... +30 V
• Low level (an open digital input is interpreted as "low")	
- Without galvanic isolation	-3 ... +5 V
- With galvanic isolation	-30 ... +5 V
• High level	15 ... 30 V
• Current consumption at 24 V DC, typ.	<9 mA
• Delay times of digital inputs, max. [1]	
- L → H	3 ms
- H → L	3 ms
Digital outputs (continuously short-circuit proof)	
• Voltage	24 V DC
• Load current per digital output, max.	0.5 A
• Delay times (resistive load) [1]	
- L → H, typ.	50 µs
- L → H, max.	100 µs
- H → L, typ.	75 µs
- H → L, max.	150 µs
Analog input (difference)	
• Voltage range	-10 ... +10 V
• Internal resistance	≥100 kΩ
• Resolution [2]	12 bits + sign

	TM41 Terminal Module 6SL3055-0AA00-3PA1
Pulse encoder emulation	
• Level	TTL (RS422), A+, A-, B+, B-, zero track N+, N-
• Limit frequency $f_{max.}$	512 kHz
• Ratio Encoder pulses: Encoder emulation	Any number of ratio/reduction ratio of pulses
Power loss, max.	12 W
PE connection	M4 screw
Dimensions	
• Width	30 mm (1.18 in)
• Height	151 mm (5.94 in)
• Depth	110 mm (4.33 in)
Weight, approx.	0.32 kg (0.71 lb)
Certificate of suitability	cULus

[1] The specified delay times refer to the hardware. The actual reaction time depends on the time slice in which the digital input/output is processed.

[2] If the analog input is to be operated in the signal processing sense with continuously variable input voltage, the sampling frequency $f_a = 1/t_{time\ slice}$ must be at least twice the value of the highest signal frequency f_{max}.

© Siemens 2024

Integration

The TM41 Terminal Module can communicate via DRIVE-CLiQ with the following Control Units.

- CU310-2 Control Unit
- CU320-2 Control Unit

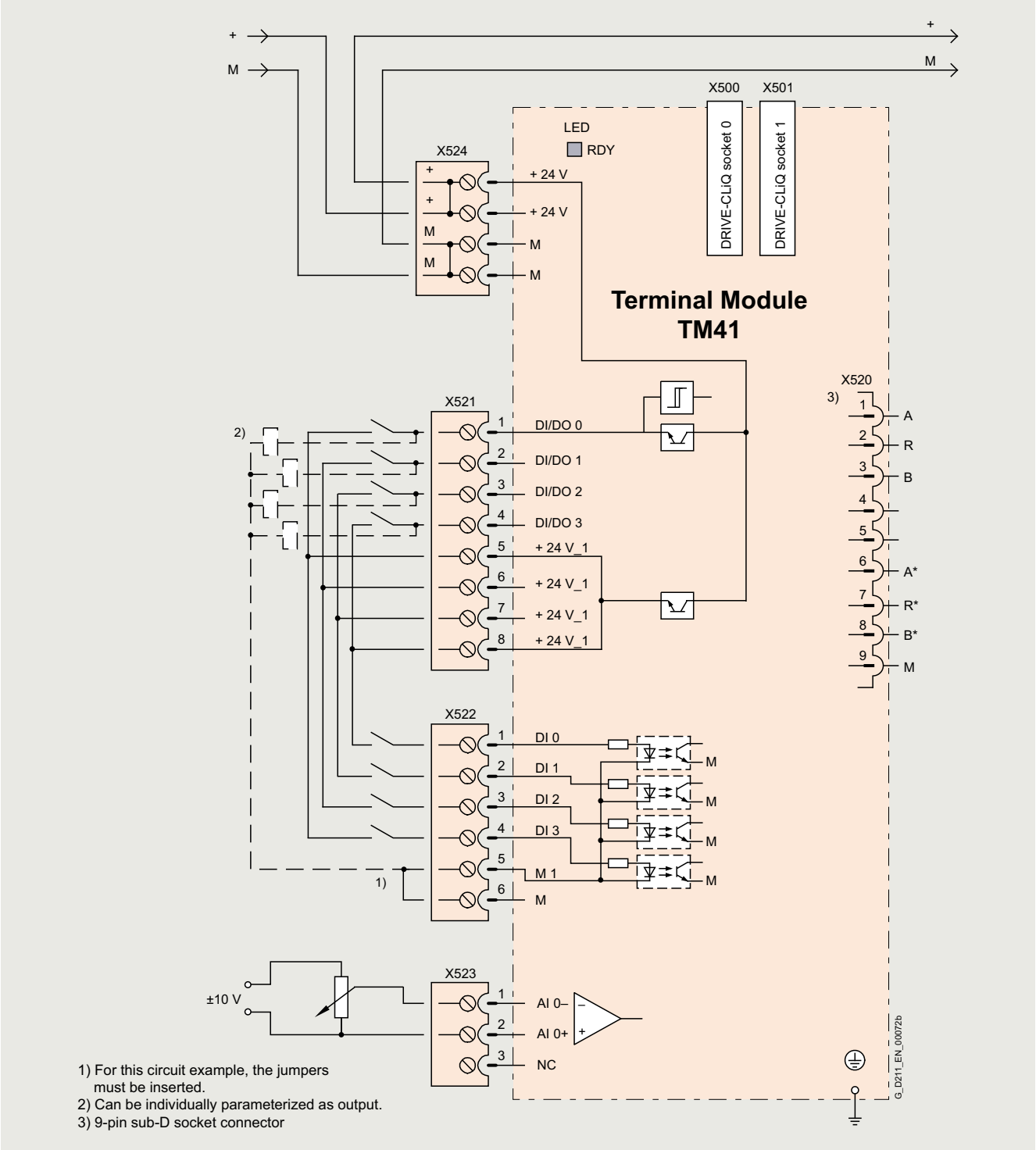

Connection example of TM41 Terminal Module

© Siemens 2024

TM54F Terminal Module

Overview

TM54F Terminal Module

The TM54F Terminal Module is a dual-processor I/O interface with four fail-safe digital outputs and ten fail-safe digital inputs for utilization of the Safety Integrated functions of the SINAMICS drive system via external actuators and sensors.

Every available safety function integrated in the drive can be controlled via the fail-safe digital inputs on the TM54F Terminal Module. In the event that the parameterized safety functions of several drives operated together on a Control Unit are to be executed together, then these drives can be grouped in the TM54F Terminal Module. The advantage of this approach is that only one fail-safe digital input needs to be connected for these drives.

The fail-safe digital inputs and outputs have two channels and are redundantly configured with an internal data cross-check using the two processors. A fail-safe digital output consists of one P-switching and one M-switching output as well as one digital input to read back the switching state. A fail-safe digital input consists of two digital inputs.

Safety sensors can be connected over two switchable 24 V sensor supplies and can be evaluated over the fail-safe digital inputs. The switchable 24 V sensor supply ensures that the fail-safe digital inputs can be dynamized to detect dormant errors (this dynamization is used to check the shutdown paths).
An unswitchable 24 V sensor supply is additionally provided by the TM54F Terminal Module for connecting undynamizable safety sensors.

The TM54F Terminal Module must be directly connected to a Control Unit via a DRIVE-CLiQ cable. Only one TM54F Terminal Module can be assigned to each Control Unit. It is not permissible to make the TM54F connection via another DRIVE-CLiQ device, e.g. a Power Module, a Motor Module or a Line Module.

Design

The following are located on the TM54F Terminal Module:

- 4 fail-safe digital outputs
- 10 fail-safe digital inputs
- 4 LEDs, single color for indicating the status of the read back channel of the fail-safe digital outputs
- 4 LEDs, dual-color for indicating the status of the fail-safe digital outputs
- 20 LEDs, dual-color for indicating the status of the fail-safe digital inputs
- 3 LEDs, single color for indicating the status of the 24 V sensor supplies
- 2 DRIVE-CLiQ sockets
- 2 connections for 24 V sensor supply, switchable
- 1 connection for 24 V sensor supply, not switchable
- 1 connection for the electronics power supply via the 24 V DC supply connector
- 1 connection for the 24 V power supply to digital outputs and sensors
- 1 PE/protective conductor connection

The status of the TM54F Terminal Module is indicated via a multi-color LED.

The TM54F Terminal Module can be snapped onto a TH 35 standard mounting rail in accordance with EN 60715 (IEC 60715).

The signal cable shield can be attached to the TM54F Terminal Module via a shield connection terminal, e.g. type SK8 supplied by Phoenix Contact or type KLBÜ CO 1 supplied by Weidmüller. The shield connection terminal must not be used as a strain relief mechanism.

Pins for connector coding are included in the TM54F Terminal Module scope of supply.

Selection and ordering data

Description	Article No.
TM54F Terminal Module Without DRIVE-CLiQ cable	**6SL3055-0AA00-3BA0**
Accessories for re-ordering	
Dust protection blanking plugs (50 units) For DRIVE-CLiQ port	**6SL3066-4CA00-0AA0**

For the SINAMICS S150 and SINAMICS S120 Cabinet Modules, the TM54F Terminal Module can be ordered as an option by specifying order code **K87**.

© Siemens 2024

Technical specifications

	TM54F Terminal Module 6SL3055-0AA00-3BA0
Current requirement (X524 at 24 V DC) without DRIVE-CLiQ supply	0.2 A
• Conductor cross-section, max.	2.5 mm^2
• Fuse protection, max.	20 A
Max. current requirement ext. 24 V for supplying the digital outputs and 24 V sensor supply (X514 at 24 V DC)	4 A
• Conductor cross-section, max.	2.5 mm^2
• Fuse protection, max.	20 A
I/O	
• Number of fail-safe digital inputs	10
• Number of fail-safe digital outputs	4
• 24 V sensor supply	3, of which 2 can be temporarily shut down using an internal test routine for dynamizing fail-safe digital inputs, current carrying capacity 0.5 A each
• Cables and connections	Plug-in screw-type terminals
• Conductor cross-section, max.	1.5 mm^2
Digital inputs in accordance with IEC 61131-2 Type 1, with galvanic isolation	
• Voltage	-3 ... +30 V
• Low level (an open digital input is interpreted as "low")	-3 ... +5 V
• High level	15 ... 30 V
• Current consumption at 24 V DC, typ.	>3.2 mA
• Delay time of digital inputs, approx. [1]	
- L → H, typ.	30 µs
- H → L, typ.	60 µs
• Safe state	Low level (for inputs that can be inverted: without inversion)
Digital outputs (continuously short-circuit proof)	
• Voltage	24 V DC
• Load current per fail-safe digital output, max. [2]	0.5 A
• Delay times (resistive load) [1]	
- L → H, typ.	300 µs
- H → L, typ.	350 µs
• Safe state	Output switched off

	TM54F Terminal Module 6SL3055-0AA00-3BA0
Scanning cycle t_{SI} for fail-safe digital inputs or fail-safe digital outputs	4 ... 25 ms (adjustable)
Power loss, max. At 24 V	4.5 W
PE connection	M4 screw
Dimensions	
• Width	50 mm (1.97 in)
• Height	151 mm (5.94 in)
• Depth	110 mm (4.33 in)
Weight, approx.	0.9 kg (1.98 lb)
Certificate of suitability	cULus
Safety Integrated	Acc. to IEC 61508 SIL 2 and EN ISO 13849-1 PL d and Category 3

[1] The specified delay times refer to the hardware. The actual reaction time depends on the time slice in which the digital input/output is processed.

[2] The total current of all fail-safe digital outputs must not exceed 5.33 A.

© Siemens 2024

Integration

The TM54F Terminal Module can communicate via DRIVE-CLiQ with the following Control Units.

- CU310-2 Control Unit
- CU320-2 Control Unit

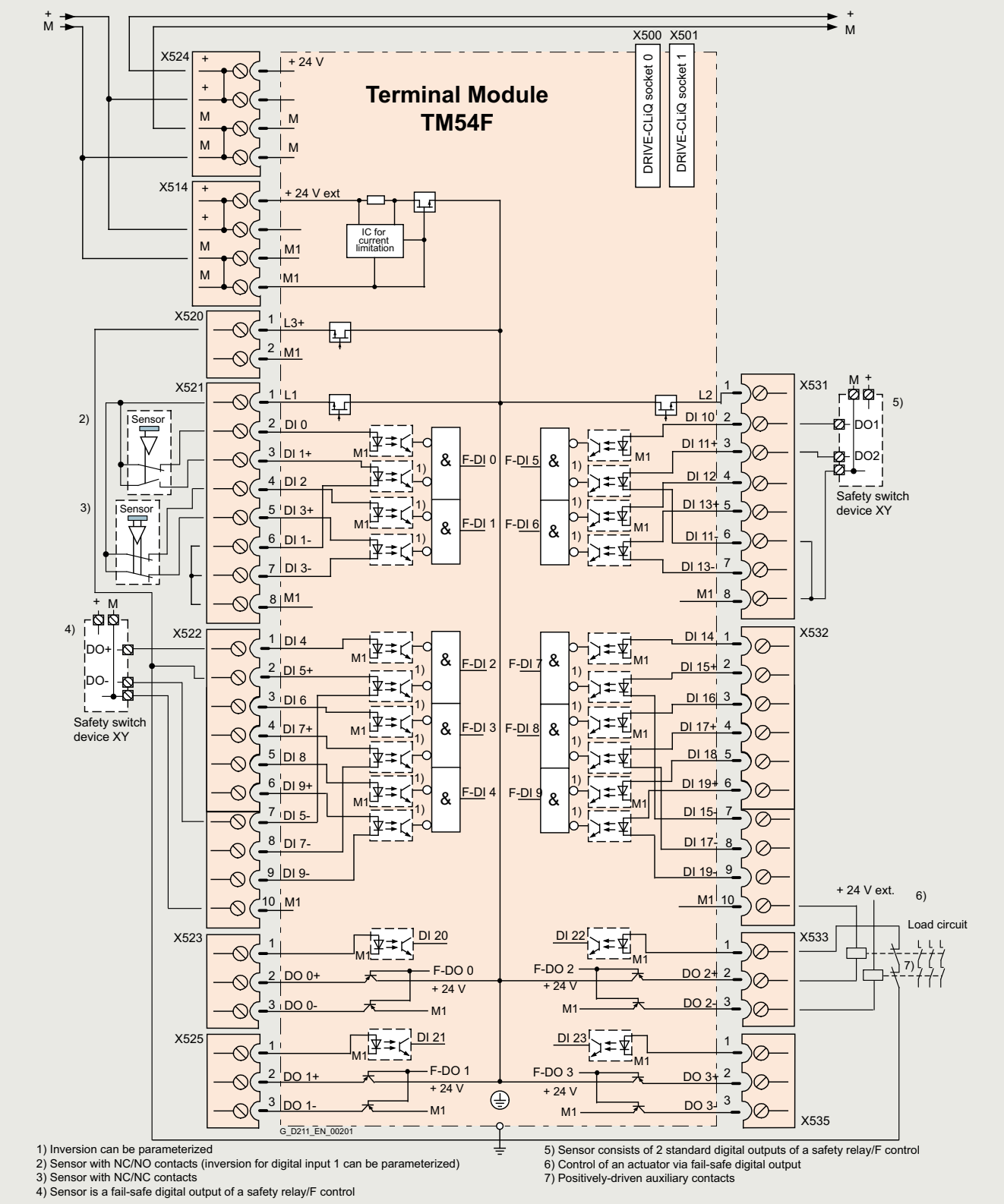

1) Inversion can be parameterized
2) Sensor with NC/NO contacts (inversion for digital input 1 can be parameterized)
3) Sensor with NC/NC contacts
4) Sensor is a fail-safe digital output of a safety relay/F control
5) Sensor consists of 2 standard digital outputs of a safety relay/F control
6) Control of an actuator via fail-safe digital output
7) Positively-driven auxiliary contacts

Connection example of TM54F Terminal Module

© Siemens 2024

Overview

TM120 Terminal Module

Four temperature sensors can be evaluated via the TM120 Terminal Module. The temperature sensor inputs are safely electrically isolated from the evaluation electronics in the TM120 Terminal Module and are suitable for evaluating the temperature of special motors, e.g. SIMOTICS L-1FN linear motors and SIMOTICS T-1FW6 built-in torque motors.

Design

The following are located on the TM120 Terminal Module:

- 4 temperature sensor inputs for KTY84-130, Pt1000 or PTC (Pt1000 can be used from firmware V4.7 HF17 and higher)
- 2 DRIVE-CLiQ sockets
- 1 connection for the electronics power supply via the 24 V DC supply connector
- 1 PE/protective conductor connection

The status of the TM120 Terminal Module is indicated using a multi-color LED.

The TM120 Terminal Module can be snapped onto a TH 35 standard mounting rail in accordance with EN 60715 (IEC 60715).

Selection and ordering data

Description	Article No.
TM120 Terminal Module Without DRIVE-CLiQ cable	**6SL3055-0AA00-3KA0**
Accessories for re-ordering	
Dust protection blanking plugs (50 units) For DRIVE-CLiQ port	**6SL3066-4CA00-0AA0**

Technical specifications

	TM120 Terminal Module 6SL3055-0AA00-3KA0
Power requirement, max. at 24 V DC • Conductor cross-section, max. • Fuse protection, max.	0.5 A 2.5 mm^2 20 A
Temperature sensor inputs The inputs can be individually parameterized to evaluate sensors of type KTY84-130, Pt1000, PTC or temperature switches • Conductor cross-section • Constant current per sensor, approx. • Safe electrical separation up to line voltage, max.	 0.2 ... 6 mm^2 2 mA 480 V AC
Power loss, typically	2.4 W
PE connection	M4 screw
Dimensions • Width • Height • Depth	 30 mm (1.18 in) 150 mm (5.91 in) 111 mm (4.37 in)
Weight, approx.	0.41 kg (0.90 lb)

© Siemens 2024

Integration

The TM120 Terminal Module can communicate via DRIVE-CLiQ with the following Control Units with SINAMICS firmware version V4.3 and higher:

- CU310-2 Control Unit
- CU320-2 Control Unit

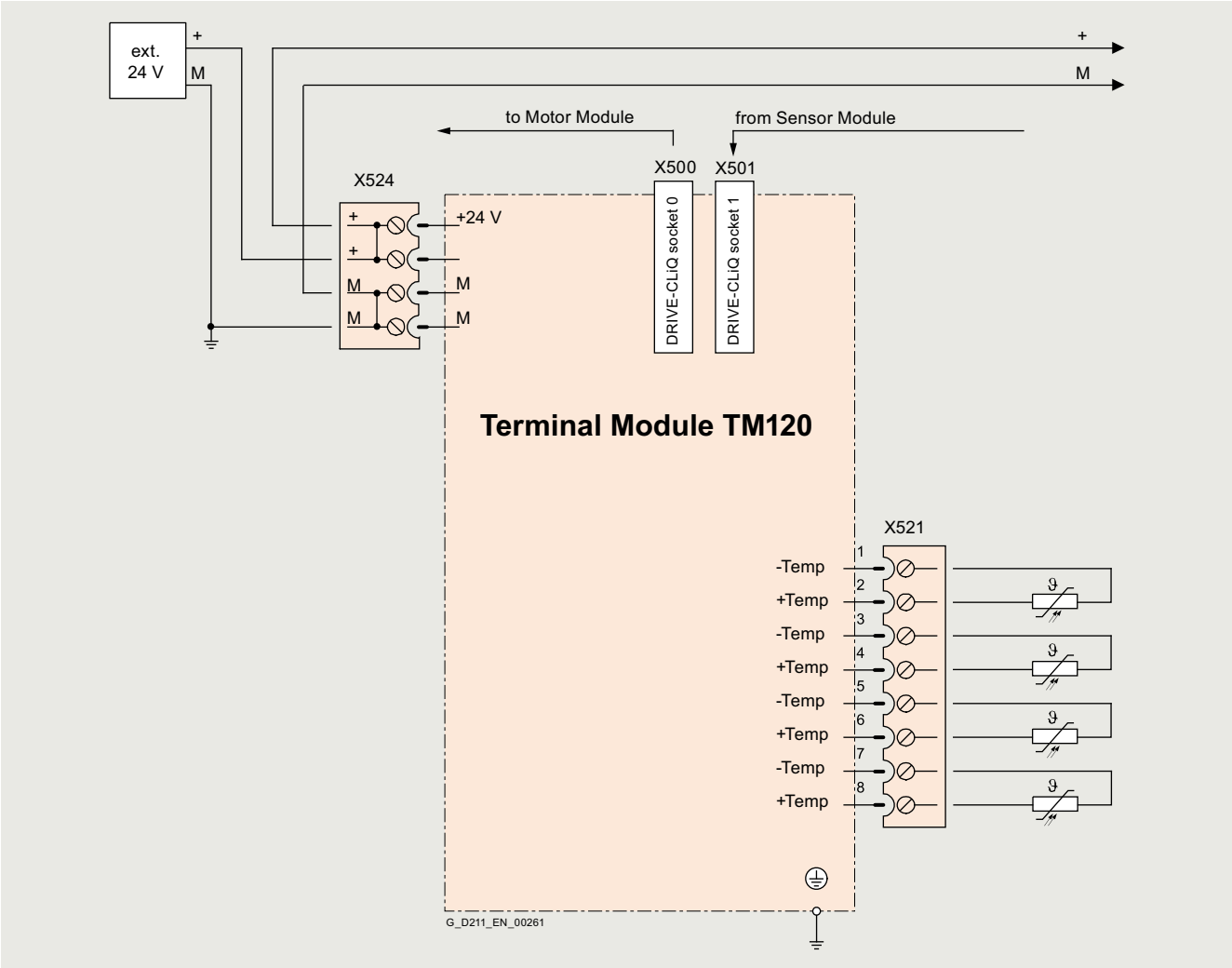

Example connection of a TM120 Terminal Module

© Siemens 2024

Overview

TM150 Terminal Module

The TM150 Terminal Module is a DRIVE-CLiQ component for temperature evaluation. The temperature is measured in a temperature range from -99 °C to +250 °C for the following temperature sensors:

- Pt100 (with monitoring for wire breaks and short-circuits)
- Pt1000 (with monitoring for wire breaks and short-circuits)
- KTY84 (with monitoring for wire breaks and short-circuits)
- PTC (with monitoring for short-circuit)
- Bimetallic NC contact (without monitoring)

For the temperature sensor inputs, for each terminal block the evaluation can be parameterized for 1×2-wire, 2×2-wire, 3-wire or 4-wire. There is no galvanic isolation in the TM150 Terminal Module.

The temperature channels of a TM150 can be subdivided into 3 groups and evaluated together.

Design

The following are located on the TM150 Terminal Module:

- 6 ... 12 temperature sensor inputs
- 2 DRIVE-CLiQ sockets
- 1 connection for the electronics power supply via the 24 V DC supply connector
- 1 PE/protective conductor connection

The status of the TM150 Terminal Module is indicated via a multi-color LED.

The TM150 Terminal Module can be snapped onto a TH 35 standard mounting rail in accordance with EN 60715 (IEC 60715).

Selection and ordering data

Description	Article No.
TM150 Terminal Module Without DRIVE-CLiQ cable	**6SL3055-0AA00-3LA0**
Accessories for re-ordering	
Dust protection blanking plugs (50 units) For DRIVE-CLiQ port	**6SL3066-4CA00-0AA0**

For the SINAMICS S120 Cabinet Modules, the TM150 Terminal Module can be ordered as an option by specifying order code **G51** or **G51** to **G54**.

Technical specifications

	TM150 Terminal Module 6SL3055-0AA00-3LA0
Power requirement, max. at 24 V DC • Conductor cross section, max. • Fuse protection, max.	0.5 A 2.5 mm^2 20 A
Temperature sensor inputs The inputs can be parameterized individually for the evaluation of sensors • Conductor cross section, max. • Measuring current per sensor, approx.	 1.5 mm^2 0.8 mA
Power loss	1.6 W
PE connection	M4 screw
Dimensions • Width • Height • Depth	 30 mm (1.18 in) 150 mm (5.91 in) 111 mm (4.37 in)
Weight, approx.	0.41 kg (0.90 lb)
Certificate of suitability	cULus

© Siemens 2024

Integration

The TM150 Terminal Module can communicate via DRIVE-CLiQ with the following Control Units.

- CU310-2 Control Unit
- CU320-2 Control Unit

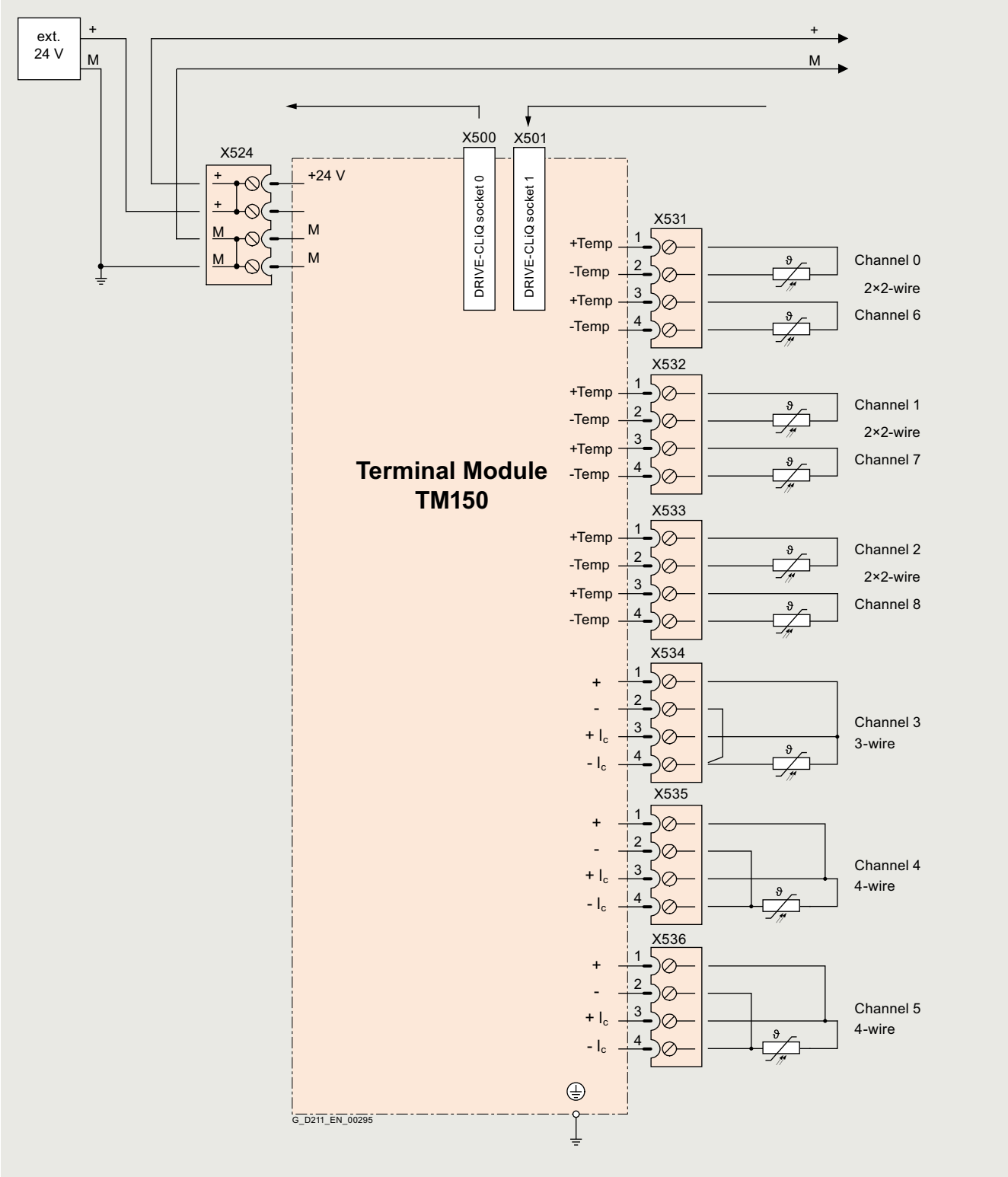

Connection example of a TM150 Terminal Module

© Siemens 2024

Overview

VSM10 Voltage Sensing Module

The VSM10 Voltage Sensing Module enables the line or motor voltage characteristic to be measured precisely. The phase differential voltage can be measured, either grounded (in the delivery state with jumper plugged in) or isolated.

In addition, the VSM10 Voltage Sensing Module is used to connect to rotating synchronous motors – or for a "quick flying restart" of rotating induction motors.

Design

The VSM10 Voltage Sensing Module has the following connections and interfaces:

- 1 connection for direct voltage sensing up to 690 V
- 1 connection for voltage sensing using voltage transformers; maximum voltage 100 V
- 2 analog inputs (reserved for monitoring of resonance in the Active Interface Module in chassis format)
- 1 temperature sensor input for KTY84-130, Pt1000 or PTC (Pt1000 can be used from firmware V4.7 HF17 and higher)
- 1 DRIVE-CLiQ socket
- 1 connection for the electronics power supply via the 24 V DC supply connector
- 1 plug-in jumper for either grounded (delivery state) or isolated measurement
- 1 PE/protective conductor connection

The status of the VSM10 Voltage Sensing Module is indicated via a multi-color LED.

The VSM10 Voltage Sensing Module can be snapped onto a TH 35 standard mounting rail in accordance with EN 60715 (IEC 60715).

Selection and ordering data

Description	Article No.
VSM10 Voltage Sensing Module Without DRIVE-CLiQ cable	**6SL3053-0AA00-3AA1**
Accessories for re-ordering	
Dust protection blanking plugs (50 units) For DRIVE-CLiQ port	**6SL3066-4CA00-0AA0**

For the SINAMICS S150 and SINAMICS S120 Cabinet Modules, the VSM10 Voltage Sensing Module can be ordered as an option by specifying order code **K51** in order to implement the flying restart function.

Technical specifications

	VSM10 Voltage Sensing Module 6SL3053-0AA00-3AA1
Power requirement, max. at 24 V DC • Conductor cross-section, max.	0.2 A 2.5 mm^2
Power loss, max.	10 W
Line voltage detection • Insulation resistance neutral point – ground when jumper is not inserted • Input resistance - Terminal X521 - Terminal X522	 >10 MΩ >362 kΩ/phase >2.5 MΩ/phase
Analog inputs (reserved for monitoring an Active Interface Module in chassis format) • Internal resistance, approx. (between differential inputs) • Resolution	 100 kΩ 12 bits + sign
PE connection	M4 screw
Dimensions • Width • Height • Depth	 50 mm (1.97 in) 151 mm (5.94 in) 110 mm (4.33 in)
Weight, approx.	1 kg (2.20 lb)
Certificate of suitability	cULus

© Siemens 2024

Integration

The VSM10 Voltage Sensing Module can communicate with the following Control Units via DRIVE-CLiQ:

- CU310-2 Control Unit
- CU320-2 Control Unit

On the SINAMICS S120 chassis format, the VSM10 Voltage Sensing Module is integrated in the Active Interface Modules and Smart Line Modules.

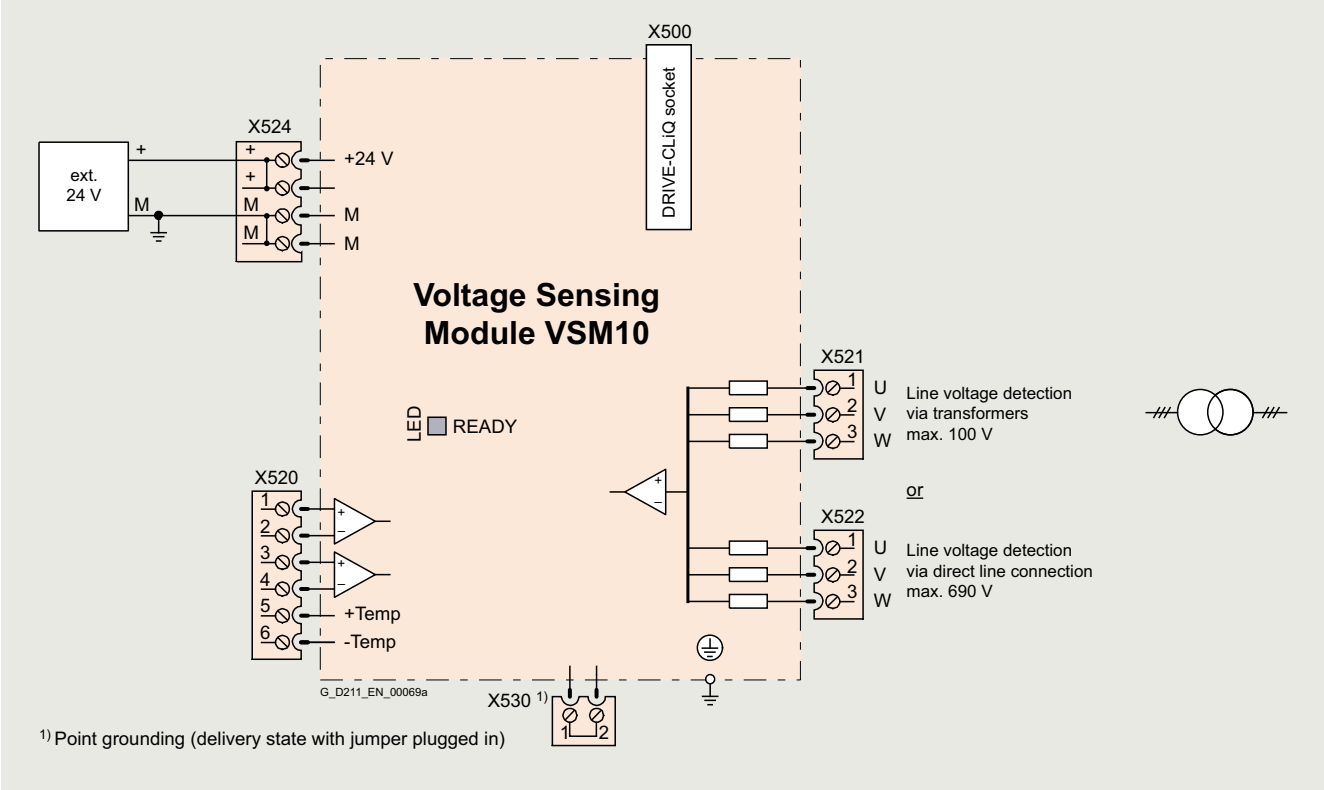

Connection example of a VSM10 Voltage Sensing Module

© Siemens 2024

Overview

SBA Safe Brake Adapter

The SBA Safe Brake Adapter is needed for the implementation of a safe brake control (Safety Integrated function SBC) in accordance with IEC 61800-5-2.

The Safe Brake Adapter is available for a 230 V AC brake control voltage.

Note:
The SBA is approved for the IEC area. Safe Brake Adapter with UL approval are available on request. The UL approval is valid for a maximum permissible current consumption of 1.5 A (inductive).

Design

The Safe Brake Adapter SBA has the following connections and interfaces:

- 1 connection for the connecting cable to the Power Module/Motor Module
- 1 connection for the external 230 V AC supply
- 1 connection for motor holding brake
- 1 connection for fast de-excitation

The SBA Safe Brake Adapter is designed for attachment to a support rail in accordance with EN 60715.

Selection and ordering data

Description	Article No.
SBA Safe Brake Adapter 230 V AC/2 A	**6SL3355-2DX00-1AA0**
Accessories	
Connecting cable Pre-assembled interface cable to connect the SBA to the electronics module Control Interface Module in the Motor Module/Power Module (4 m)	**6SL3060-4DX04-0AA0**

Technical specifications

	SBA Safe Brake Adapter 6SL3355-2DX00-1AA0
Electronics power supply	
• Supply voltage (via the Control Interface Module)	24 V DC (20.4 … 28.8 V DC)
Supply voltage of the motor holding brake	230 V AC
Current consumption, max. permitted [1]	
• Motor holding brake	2 A
• Fast de-excitation	2 A
Cable length, max.	
• to the Control Interface Module	10 m (32.8 ft)
• to the brake	300 m (984 ft)
Conductor cross-section, max., respectively	2.5 mm^2
Dimensions	
• Width	75 mm (2.95 in)
• Height	111 mm (4.37 in)
• Depth	89 mm (3.50 in)
Weight, approx.	0.25 kg (0.55 lb)
Safety Integrated	According to IEC 61508 SIL2 and ISO 13849-1 PLd and Category 3

[1] The UL approval is valid for a maximum permissible current consumption of 1.5 A (inductive).

© Siemens 2024

Integration

The control and feedback signal regarding the switching state of the SBA relay is realized via terminals of the Control Interface Module (CIM) in the Motor Module/Power Module. The excitation coil of the holding brake is connected directly at the SBA.

The SBA can be ordered as an additional component for SINAMICS S120 built-in units in chassis format.

It is available as option (**K88**) for SINAMICS S150 and S120 Cabinet Modules.

For the SINAMICS S120 units, chassis format, the brake supply voltage must be connected externally at the SBA.

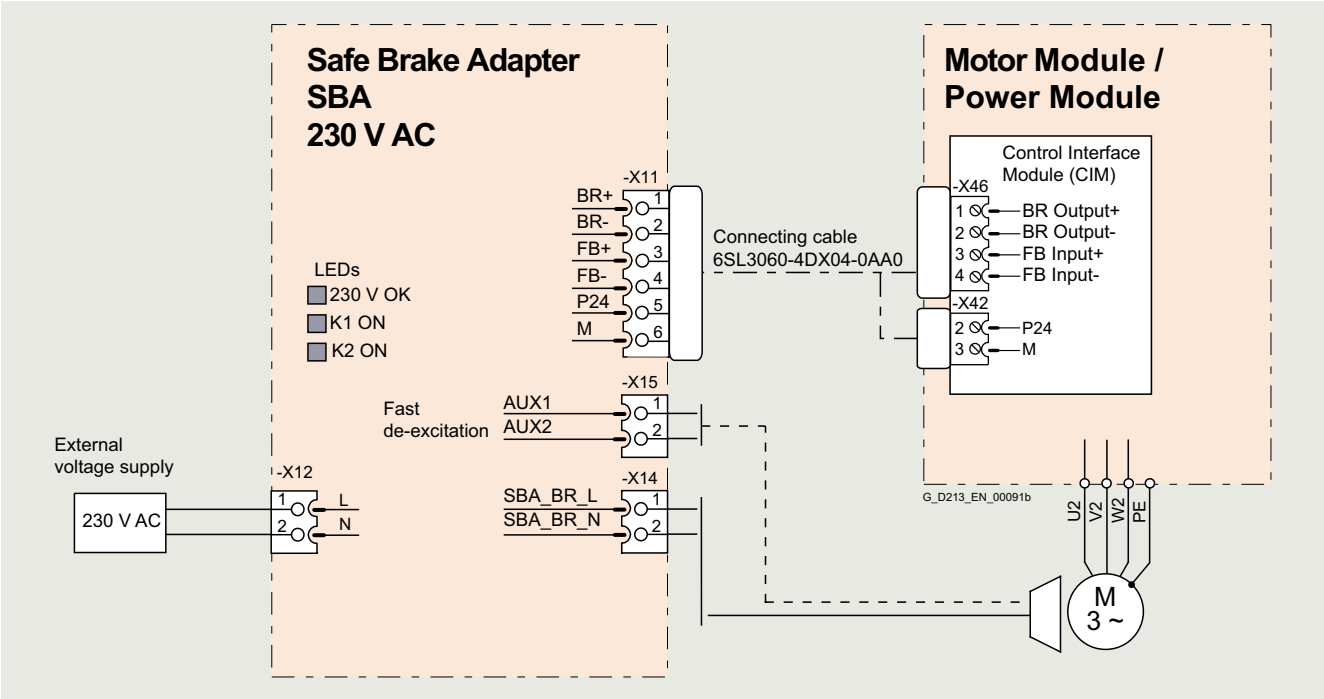

Connection example for the SBA Safe Brake Adapter

© Siemens 2024

Overview

Motors with DRIVE-CLiQ interface

DRIVE-CLiQ is the preferred method for connecting the encoder systems to SINAMICS S120. Motors with DRIVE-CLiQ interface are available for this purpose.

Motors with a DRIVE-CLiQ interface can be directly connected to the associated Motor Module using MOTION-CONNECT DRIVE-CLiQ cables. The MOTION-CONNECT DRIVE-CLiQ cable connection at the motor has degree of protection IP67.

The DRIVE-CLiQ interface supplies the motor encoder via the integrated 24 V DC supply and transfers the motor encoder and temperature signals and the electronic rating plate data, e.g. a unique identification number and rated data (voltage, current, torque) to the Control Unit. This means that for the various encoder types – e.g. resolver or absolute encoder – different encoder cables with varying permissible lengths are no longer required; just one cable type, MOTION-CONNECT DRIVE-CLiQ with varying permissible lengths, can be used for all encoders.

These motors simplify commissioning and diagnostics, as the motor and encoder type are identified automatically.

Motors without DRIVE-CLiQ interface

The encoder and temperature signals of motors without DRIVE-CLiQ interfaces, as well as those of external encoders, must be connected via Sensor Modules. Sensor Modules Cabinet-Mounted are available in degree of protection IP20 for control cabinet installation, as well as Sensor Modules External-Mounted in degree of protection IP67.

Only one encoder system can be connected to each Sensor Module.

More information

Motor encoder and temperature signals should preferably be connected to the corresponding Motor Module or Power Module and external encoders to the Control Unit. However, the DRIVE-CLiQ connections can also be bundled via DRIVE-CLiQ Hub Modules.

Safety Integrated

The Safety Integrated Extended Functions of the SINAMICS drive system require suitable encoders.

Belt-driven motor

Unfavorable material combinations generate static electricity between the belt pulley and the belt. Electrostatic charging must be prevented, since this can discharge via the motor shaft and the encoder, thereby causing disturbances in the encoder signals. One remedy is to use an anti-static belt.

© Siemens 2024

SMC10 Sensor Module Cabinet-Mounted

Overview

SMC10 Sensor Module Cabinet-Mounted

The SMC10 Sensor Module Cabinet-Mounted is required to evaluate the encoder signals of motors without a DRIVE-CLiQ interface. External encoders can also be connected via the SMC10.

The following encoder signals can be evaluated:

- 2-pole resolver
- Multi-pole resolver

Design

The SMC10 Sensor Module Cabinet-Mounted features the following connections and interfaces as standard:

- 1 encoder connection including motor temperature sensing (KTY84-130, Pt1000 or PTC) via SUB-D connector
- 1 DRIVE-CLiQ interface
- 1 connection for the electronics power supply via the 24 V DC supply connector
- 1 PE/protective conductor connection

The status of the SMC10 Sensor Module Cabinet-Mounted is indicated via a multi-color LED.

The SMC10 Sensor Module Cabinet-Mounted can be snapped onto a TH 35 standard mounting rail according to EN 60715 (IEC 60715).

The signal cable shield is connected via the encoder system connector and can also be connected to the SMC10 Sensor Module Cabinet-Mounted via a shield connection terminal, e.g. Phoenix Contact type SK8 or Weidmüller type KLBÜ CO 1. The shield connection terminal must not be used as a strain relief mechanism.

Selection and ordering data

Description	Article No.
SMC10 Sensor Module Cabinet-Mounted Without DRIVE-CLiQ cable	**6SL3055-0AA00-5AA3**
Accessories for re-ordering	
Dust protection blanking plugs (50 units) For DRIVE-CLiQ port	**6SL3066-4CA00-0AA0**

For the SINAMICS S150 and SINAMICS S120 Cabinet Modules, the SMC10 Sensor Module Cabinet-Mounted can be ordered as an option by specifying order code **K46**.

Integration

SMC10 Sensor Modules Cabinet-Mounted communicate with a Control Unit via DRIVE-CLiQ.

Technical specifications

	SMC10 Sensor Module Cabinet-Mounted 6SL3055-0AA00-5AA3
Current requirement, max. at 24 V DC, without taking encoder into account	0.2 A
• Conductor cross-section, max.	2.5 mm^2
• Fuse protection, max.	20 A
Power loss, max.	10 W
Encoders which can be evaluated	• 2-pole resolver • Multi-pole resolver
• Excitation voltage, rms	4.1 V
• Excitation frequency	5 ... 16 kHz depending on the current controller clock cycle of the Motor Module or Power Module
• Transformation ratio	0.5
• Encoder frequency, max.	2 kHz (120000 r/min) depending on the number of resolver pole pairs and current controller clock cycle of the Motor Module or Power Module
• Signal subdivision (interpolation), max.	16384 times (14 bits)
• Cable length to encoder, max.	130 m (427 ft)
PE connection	M4 screw
Dimensions	
• Width	30 mm (1.18 in)
• Height	150 mm (5.91 in)
• Depth	111 mm (4.37 in)
Weight, approx.	0.45 kg (0.99 lb)
Certificate of suitability	cULus

© Siemens 2024

Overview

SMC20 Sensor Module Cabinet-Mounted

The SMC20 Sensor Module Cabinet-Mounted is required to evaluate the encoder signals of motors without a DRIVE-CLiQ interface. External encoders can also be connected via the SMC20.

The following encoder signals can be evaluated:

- Incremental encoder sin/cos 1 V_{pp}
- Absolute encoder EnDat 2.1
- SSI encoder with incremental signals sin/cos 1 V_{pp} (firmware version 2.4 and later)

The motor temperature can also be sensed using a PTC thermistor KTY84-130, Pt1000 or PTC.

Design

The SMC20 Sensor Module Cabinet-Mounted features the following connections and interfaces as standard:

- 1 encoder connection including motor temperature sensing (KTY84-130, Pt1000 or PTC) via SUB-D connector
- 1 DRIVE-CLiQ interface
- 1 connection for the electronics power supply via the 24 V DC supply connector
- 1 PE/protective conductor connection

The status of the SMC20 Sensor Module Cabinet-Mounted is indicated via a multi-color LED.

The SMC20 Sensor Module Cabinet-Mounted can be snapped onto a TH 35 standard mounting rail according to EN 60715 (IEC 60715).

The signal cable shield is connected via the encoder system connector and can also be connected to the SMC20 Sensor Module Cabinet-Mounted via a shield connection terminal, e.g. Phoenix Contact type SK8 or Weidmüller type KLBÜ CO 1. The shield connection terminal must not be used as a strain relief mechanism.

Selection and ordering data

Description	Article No.
SMC20 Sensor Module Cabinet-Mounted Without DRIVE-CLiQ cable	**6SL3055-0AA00-5BA3**
Accessories for re-ordering	
Dust protection blanking plugs (50 units) For DRIVE-CLiQ port	**6SL3066-4CA00-0AA0**

For the SINAMICS S150 and SINAMICS S120 Cabinet Modules, the SMC20 Sensor Module Cabinet-Mounted can be ordered as an option by specifying order code **K48**.

Integration

SMC20 Sensor Modules Cabinet-Mounted communicate with a Control Unit via DRIVE-CLiQ.

Technical specifications

	SMC20 Sensor Module Cabinet-Mounted 6SL3055-0AA00-5BA3
Power requirement, max. at 24 V DC, without taking encoder into account	0.2 A
• Conductor cross-section, max.	2.5 mm^2
• Fuse protection, max.	20 A
Power loss, max.	10 W
Encoders which can be evaluated	• Incremental encoder sin/cos 1 V_{pp} • Absolute encoder EnDat 2.1 • SSI encoder with incremental signals sin/cos 1 V_{pp} (firmware version 2.4 and later)
• Encoder supply	5 V DC/0.35 A
• Encoder frequency incremental signals, max.	500 kHz
• Signal subdivision (interpolation), max.	16384 times (14 bits)
• SSI baud rate	100 ... 1000 kBaud
• Cable length to encoder, max.	100 m (328 ft)
PE connection	M4 screw
Dimensions	
• Width	30 mm (1.18 in)
• Height	150 mm (5.91 in)
• Depth	111 mm (4.37 in)
Weight, approx.	0.45 kg (0.99 lb)
Certificate of suitability	cULus

© Siemens 2024

SMC30 Sensor Module Cabinet-Mounted

Overview

SMC30 Sensor Module Cabinet-Mounted

The SMC30 Sensor Module Cabinet-Mounted is required to evaluate the encoder signals of motors without a DRIVE-CLiQ interface. External encoders can also be connected via the SMC30.

The following encoder signals can be evaluated:

- Incremental encoders TTL/HTL with/without open-circuit detection (open-circuit detection is only available with bipolar signals)
- SSI encoder with TTL/HTL incremental signals
- SSI encoder without incremental signals

The motor temperature can also be sensed using a PTC thermistor KTY84-130, Pt1000 or PTC.

Design

The SMC30 Sensor Module Cabinet-Mounted features the following connections and interfaces as standard:

- 1 encoder connection including motor temperature sensing (KTY84-130, Pt1000 [1] or PTC) either via SUB-D connector or via terminals
- 1 DRIVE-CLiQ interface
- 1 connection for the electronics power supply via the 24 V DC supply connector
- 1 PE/protective conductor connection

The status of the SMC30 Sensor Module Cabinet-Mounted is indicated via a multi-color LED.

The SMC30 Sensor Module Cabinet-Mounted can be snapped onto a TH 35 standard mounting rail in according to EN 60715 (IEC 60715).

The maximum encoder cable length between SMC30 modules and encoders is 100 m. For HTL encoders, this length can be increased to 300 m if the A+/A- and B+/B- signals are evaluated and the power supply cable has a minimum cross-section of 0.5 mm^2.

The signal cable shield can be connected to the SMC30 Sensor Module Cabinet-Mounted via a shield connection terminal, e.g., Phoenix Contact type SK8 or Weidmüller type KLBÜ CO 1. The shield connection terminal must not be used as a strain relief mechanism.

Selection and ordering data

Description	Article No.
SMC30 Sensor Module Cabinet-Mounted Without DRIVE-CLiQ cable	**6SL3055-0AA00-5CA2**
Accessories for re-ordering	
Dust protection blanking plugs (50 units) For DRIVE-CLiQ port	**6SL3066-4CA00-0AA0**

For the SINAMICS S150 and SINAMICS S120 Cabinet Modules, the SMC30 Sensor Module Cabinet-Mounted can be ordered as an option by specifying order code **K50**.

A second SMC30 can be ordered as an option with the order code **K52** for reliable actual value acquisition when using the Safety Integrated Extended Functions.

Integration

SMC30 Sensor Modules Cabinet-Mounted communicate with a Control Unit via DRIVE-CLiQ.

Technical specifications

	SMC30 Sensor Module Cabinet-Mounted 6SL3055-0AA00-5CA2
Current requirement, max. at 24 V DC, without taking encoder into account	0.2 A
• Conductor cross-section, max.	2.5 mm^2
• Fuse protection, max.	20 A
Power loss, max.	10 W
Encoders which can be evaluated	• Incremental encoder TTL/HTL • SSI encoder with TTL/HTL incremental signals • SSI encoder without incremental signals
• Input current range TTL/HTL	4 ... 20 mA (typ. 10 mA)
• Encoder supply	24 V DC/0.35 A or 5 V DC/0.35 A
• Encoder frequency, max.	500 kHz
• SSI baud rate	100 ... 1000 kBaud
• Limiting frequency	500 kHz
• Resolution absolute position SSI	30 bits
• Cable length, max.	
- TTL encoder	100 m (328 ft) (only bipolar signals permitted)[1]
- HTL encoder	100 m (328 ft) for unipolar signals 300 m (984 ft) for bipolar signals[1]
- SSI encoder	100 m (328 ft)
PE connection	M4 screw
Dimensions	
• Width	30 mm (1.18 in)
• Height	150 mm (5.91 in)
• Depth	111 mm (4.37 in)
Weight, approx.	0.45 kg (0.99 lb)
Certificate of suitability	cULus

[1] Signal cables twisted in pairs and shielded.

© Siemens 2024

Overview

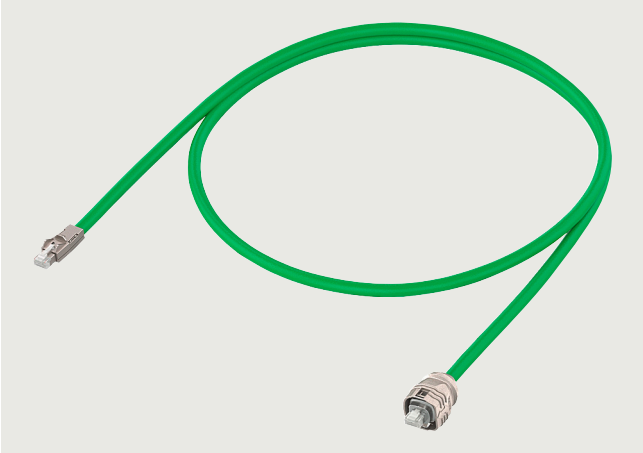

MOTION-CONNECT DRIVE-CLiQ signal cable with IP20/IP67 connector

Signal cables are required for the DRIVE-CLiQ connection between different components. Signal cables are pre-assembled and are sold by the meter. The following signal cables are available:

- DRIVE-CLiQ signal cables
- MOTION-CONNECT DRIVE-CLiQ signal cables
- MOTION-CONNECT pre-assembled signal cables

Type of delivery for pre-assembled signal cables

Application	Connection on the module side/on the motor side	24 V cores	MOTION-CONNECT 500 6FX2...	MOTION-CONNECT 500 6FX5...	MOTION-CONNECT 800PLUS 6FX8...	Length stages
DRIVE-CLiQ signal line						
Components with DRIVE-CLiQ interface, with internal or external 24 V DC power supply in the control cabinet	RJ45 IP20/RJ45 IP20	without	≤70 m (230 ft)	–	–	To the decimeter
Components with DRIVE-CLiQ interface in the control cabinet	RJ45 IP20/RJ45 IP20	with	–	≤100 m (328 ft)	≤75 m (246 ft)	To the decimeter
For built-in or built-on encoder systems with DRIVE-CLiQ interface.	RJ45 IP20/RJ45 IP67	with				
	RJ45 IP67/RJ45 IP67					
Basic cable	RJ45 IP20/M17	with				
Extension	M17/M17					
Adapter cable	RJ45 IP67/M17					
	M17/RJ45 IP67					
Basic cable	RJ45 IP20/M12	with	–	≤100 m (328 ft)	≤75 m (246 ft)	To the meter up to 20 m (65.6 ft), beyond that in steps of 5 m (16.4 ft)
Extension	M12/M12					
Adapter cable	RJ45 IP67/M12			≤30 m (98.4 ft)	≤30 m (98.4 ft)	
	M12/RJ45 IP67					
	M17/M12					

Above 30 kg (66.1 lb) or 100 m (328 ft), the cables are supplied on drums, otherwise as coils.

© Siemens 2024

Signal cables

Application

DRIVE-CLiQ signal cables without 24 V DC cores

are used to connect components with DRIVE-CLiQ connections which have a separate or external 24 V DC power supply.

MOTION-CONNECT DRIVE-CLiQ signal cables with 24 V DC cores

are used whenever components with DRIVE-CLiQ connections must meet high requirements such as mechanical stress and oil resistance, e.g. where a connection is made outside the control cabinet between

- Motor Modules and Sensor Modules
- Power Modules/Motor Modules and motors with DRIVE-CLiQ interface
- Motor Modules and direct measuring systems with DRIVE-CLiQ interface (incl. non-Siemens measuring systems)

MOTION-CONNECT pre-assembled signal cables

are used whenever motor encoders on motors without DRIVE-CLiQ interface are connected to Sensor Modules.

Design

If pre-assembled signal cables are to be installed in a cable carrier in such a way that the connector would inhibit assembly, pre-assembled cables without assembled connector can also be supplied. In this case, the contacts of the cables are crimped and the connector housing is supplied separately.
After installing the cables, the customer assembles the connector housing.

The 6FX.002-2....-.... signal cables are available with crimped contacts and with the connector housing supplied separately (not in the case of DRIVE-CLiQ signal cables and signal cables with exposed core ends).

Signal cables with **module-side** connector housing supplied as a separate accessory: In this case, the 6th position of the Article No. must be changed from **0** to **1**:
6FX.0**1**2-2C...-.... (not for signal cables for connecting via terminals or 6FX.002-2AH00-...., 6FX.002-2CA12-....).

Signal cables with **motor-side** connector housing supplied as a separate accessory. In this case, the 6th position of the Article No. must be changed from **0** to **4**:
6FX.0**4**2-2C...-.... (not for signal cables for connecting via terminals or 6FX8002-2BA20-…., 6FX8002-2BA21-….).

Note:
Once the contacts have latched into the insulator, they can no longer be removed.

© Siemens 2024

Selection and ordering data

Signal cable	Length	Connector/degree of protection module-side	Connector/degree of protection motor-side	**Basic cable** Article No.
Pre-assembled DRIVE-CLiQ signal cables (without 24 V DC cores)				
Fixed lengths	0.11 m (0.36 ft)	RJ45/IP20	RJ45/IP20	**6SL3060-4AB00-0AA0**
	0.16 m (0.52 ft)			**6SL3060-4AD00-0AA0**
	0.21 m (0.69 ft)			**6SL3060-4AF00-0AA0**
	0.26 m (0.85 ft)			**6SL3060-4AH00-0AA0**
	0.31 m (1.02 ft)			**6SL3060-4AK00-0AA0**
	0.36 m (1.18 ft)			**6SL3060-4AM00-0AA0**
	0.41 m (1.35 ft)			**6SL3060-4AP00-0AA0**
	0.60 m (1.97 ft)			**6SL3060-4AU00-0AA0**
	0.95 m (3.12 ft)			**6SL3060-4AA10-0AA0**
	1.20 m (3.94 ft)			**6SL3060-4AW00-0AA0**
	1.45 m (4.76 ft)			**6SL3060-4AF10-0AA0**
	1.60 m (5.25 ft)			**6SL3060-4AG10-0AA0**
	2.10 m (6.89 ft)			**6SL3060-4AB20-0AA0**
	2.40 m (7.87 ft)			**6SL3060-4AE20-0AA0**
	2.80 m (9.19 ft)			**6SL3060-4AJ20-0AA0**
	5.00 m (16.4 ft)			**6SL3060-4AA50-0AA0**
To the decimeter	Max. 70 m (230 ft)	RJ45/IP20	RJ45/IP20	**6FX2002-1DC00-….**
DRIVE-CLiQ MOTION-CONNECT 500 signal cables (with 24 V DC cores)				
To the decimeter	Max. 100 m (328 ft)	RJ45/IP20	RJ45/IP20	**6FX5002-2DC00-....**
	Max. 100 m (328 ft)	RJ45/IP20	RJ45/IP67	**6FX5002-2DC10-….**
	Max. 100 m (328 ft)	RJ45/IP67	RJ45/IP67	**6FX5002-2DC20-….**
DRIVE-CLiQ MOTION-CONNECT 800PLUS signal cables (with 24 V DC cores)				
To the decimeter	Max. 75 m (246 ft)	RJ45/IP20	RJ45/IP20	**6FX8002-2DC00-….**
	Max. 75 m (246 ft)	RJ45/IP20	RJ45/IP67	**6FX8002-2DC10-….**
	Max. 75 m (246 ft)	RJ45/IP67	RJ45/IP67	**6FX8002-2DC20-….**

© Siemens 2024

Selection and ordering data

Length codes

Description	Article No. supplement				
Length codes for pre-assembled cables					
	6FX.0.2-.....-	❑	❑	❑	❑
0 m (0 ft)		**1**			
100 m (328 ft)		**2**			
200 m (656 ft)		**3**			
0 m (0 ft)			**A**		
10 m (32.8 ft)			**B**		
20 m (65.6 ft)			**C**		
30 m (98.4 ft)			**D**		
40 m (131 ft)			**E**		
50 m (164 ft)			**F**		
60 m (197 ft)			**G**		
70 m (230 ft)			**H**		
80 m (262 ft)			**J**		
90 m (295 ft)			**K**		
0 m (0 ft)				**A**	
1 m (3.28 ft)				**B**	
2 m (6.56 ft)				**C**	
3 m (9.84 ft)				**D**	
4 m (13.1 ft)				**E**	
5 m (16.4 ft)				**F**	
6 m (19.7 ft)				**G**	
7 m (23 ft)				**H**	
8 m (26.2 ft)				**J**	
9 m (29.5 ft)				**K**	
0 m (0 ft)					**0**
0.1 m (0.33 ft)					**1**
0.2 m (0.66 ft)					**2**
0.3 m (0.98 ft)					**3**
0.4 m (1.31 ft)					**4**
0.5 m (1.64 ft)					**5**
0.6 m (1.97 ft)					**6**
0.7 m (2.30 ft)					**7**
0.8 m (2.62 ft)					**8**
Examples:	1.0 m (3.28 ft)	1	A	B	0
	2.2 m (7.22 ft)	1	A	C	2
	8.0 m (26.2 ft)	1	A	J	0
	299.0 m (981 ft)	3	K	K	0

Note:
Prefabricated cables with a length of 0 m (...-1AA0) **cannot** be ordered!

Description	Article No. supplement				
Length code for cables sold by the meter[1]					
	6FX.008-.....-	❑	❑	**A**	**0**
50 m (164 ft)		**1**	**F**		
100 m (328 ft)		**2**	**A**		
200 m (656 ft)		**3**	**A**		
500 m (1640 ft)		**6**	**A**		

[1] Note type of delivery. Power cables with core cross-section 4 x 4 m^2 or 4 x 4 m^2 with brake cores can be delivered in units of 1 m.

More information

Further information is available:

- Catalog D 21.4 (SINAMICS S120 and SIMOTICS)
- Internet
  - www.siemens.com/motion-connect
  - www.siemens.com/industrymall

© Siemens 2024

Integration

Connection overview for the CU320-2 Control Unit

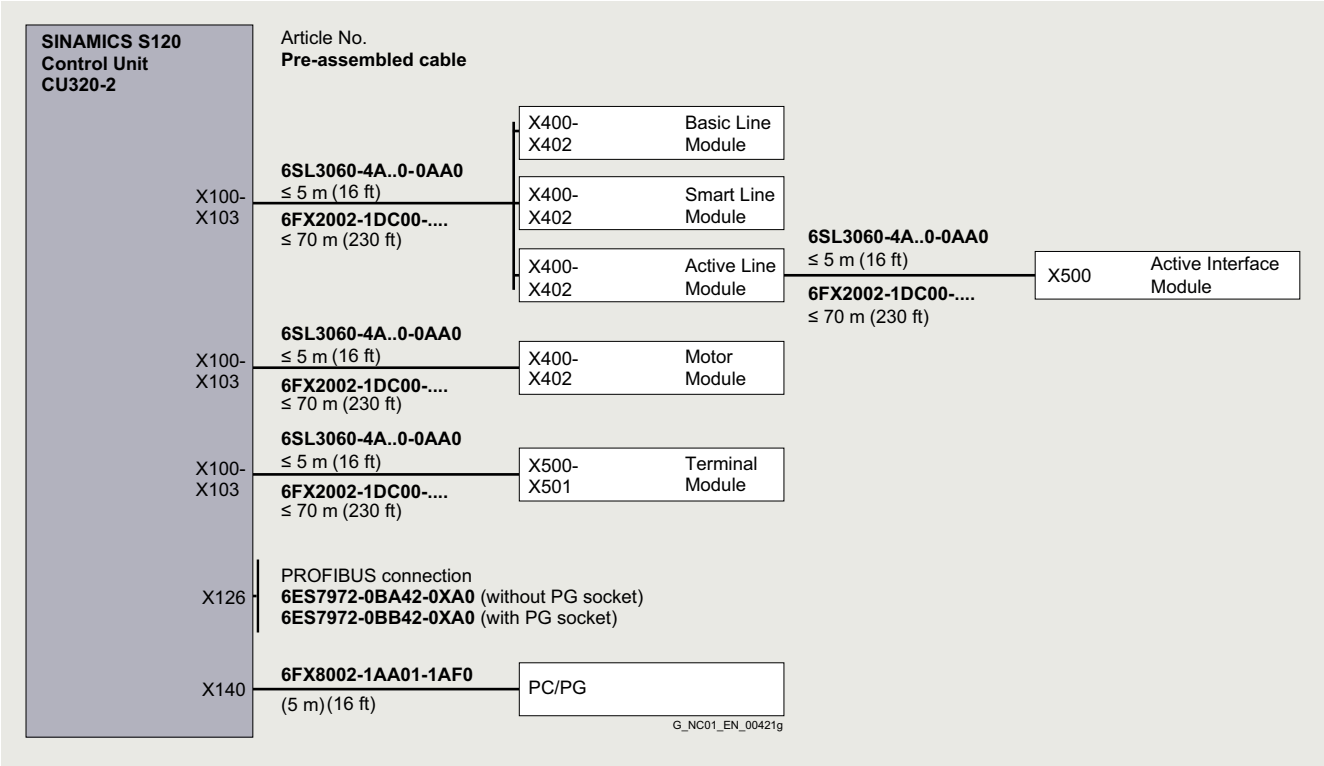

Connection overview for the SIMOTION D4x5-2 Control Unit

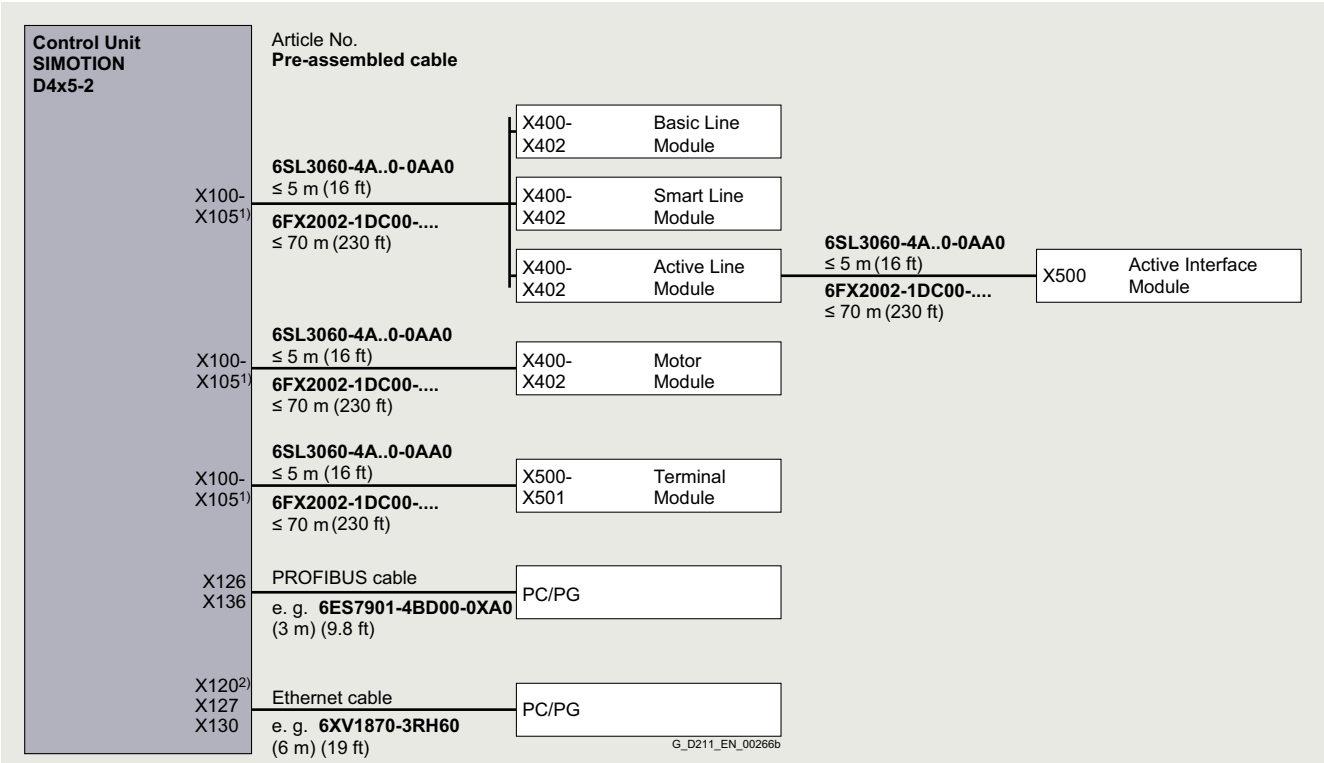

1) For SIMOTION D425-2: X100-X103.
For SIMOTION D435-2/D445-2/D455-2: X100-X105.

2) X120 for D4x5-2 DP only.

© Siemens 2024

Integration

Connection overview for Line Modules and Motor Modules

The DRIVE-CLiQ type 6SL3060-4A..0-0AA0 cables for the standard configuration are part of the scope of supply of the Line Modules and Motor Modules. In this case, the modules must be mounted directly adjacent in a line.

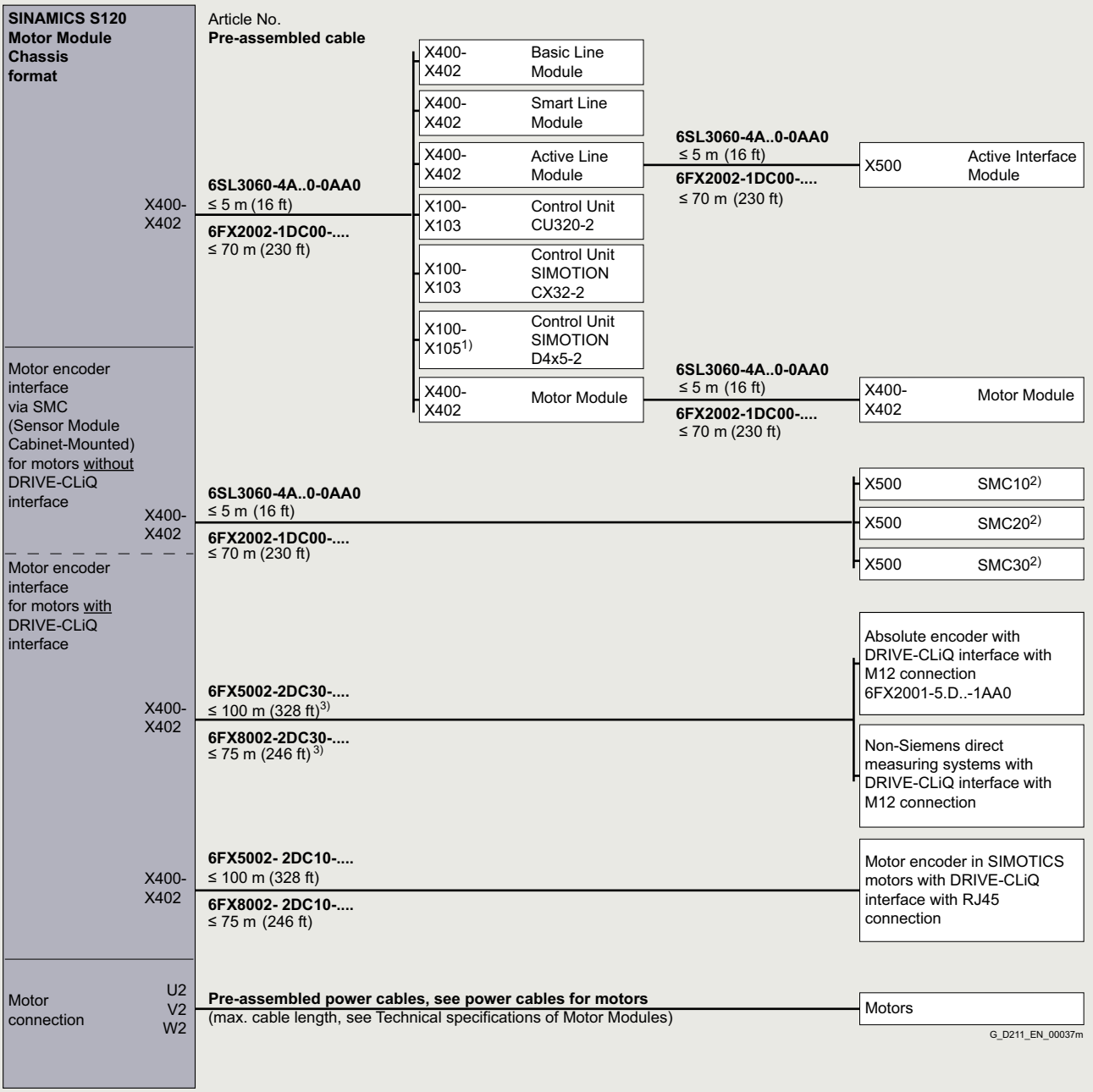

1) For SIMOTION D425-2: X100-X103.
For SIMOTION D435-2/D445-2/D455-2: X100-X105.
2) See connection overviews of SMC10/SMC20/SMC30.
3) See connection overview "SIMOTICS motors with RJ45 or M17 connection and external measuring systems with M12 connections" for further connection possibilities.

© Siemens 2024

Integration

Connection overview for Power Modules

A DRIVE-CLiQ cable of type 6SL3060-4A..0-0AA0 for connection to the chassis-mounted CU310-2 Control Unit is already included in the scope of supply.

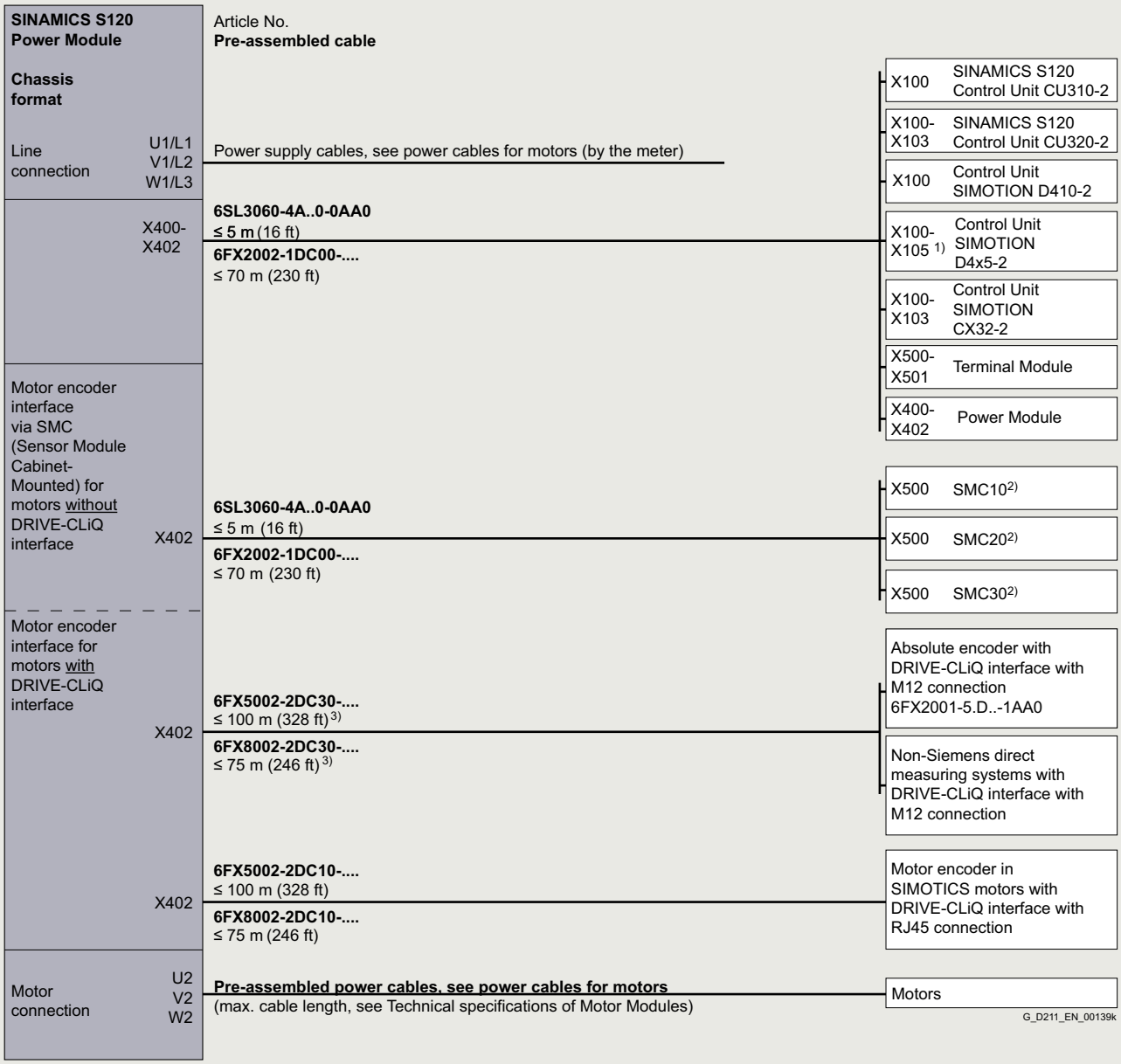

1) For SIMOTION D425-2: X100-X103.
For SIMOTION D435-2/D445-2/D455-2: X100-X105.
2) See connection overviews SMC10/SMC20/SMC30.
3) See connection overview "SIMOTICS motors with RJ45 or M17 connection and external measuring systems with M12 connections" for further connection possibilities.

© Siemens 2024

Integration

Connection of a machine encoder (direct measuring system)

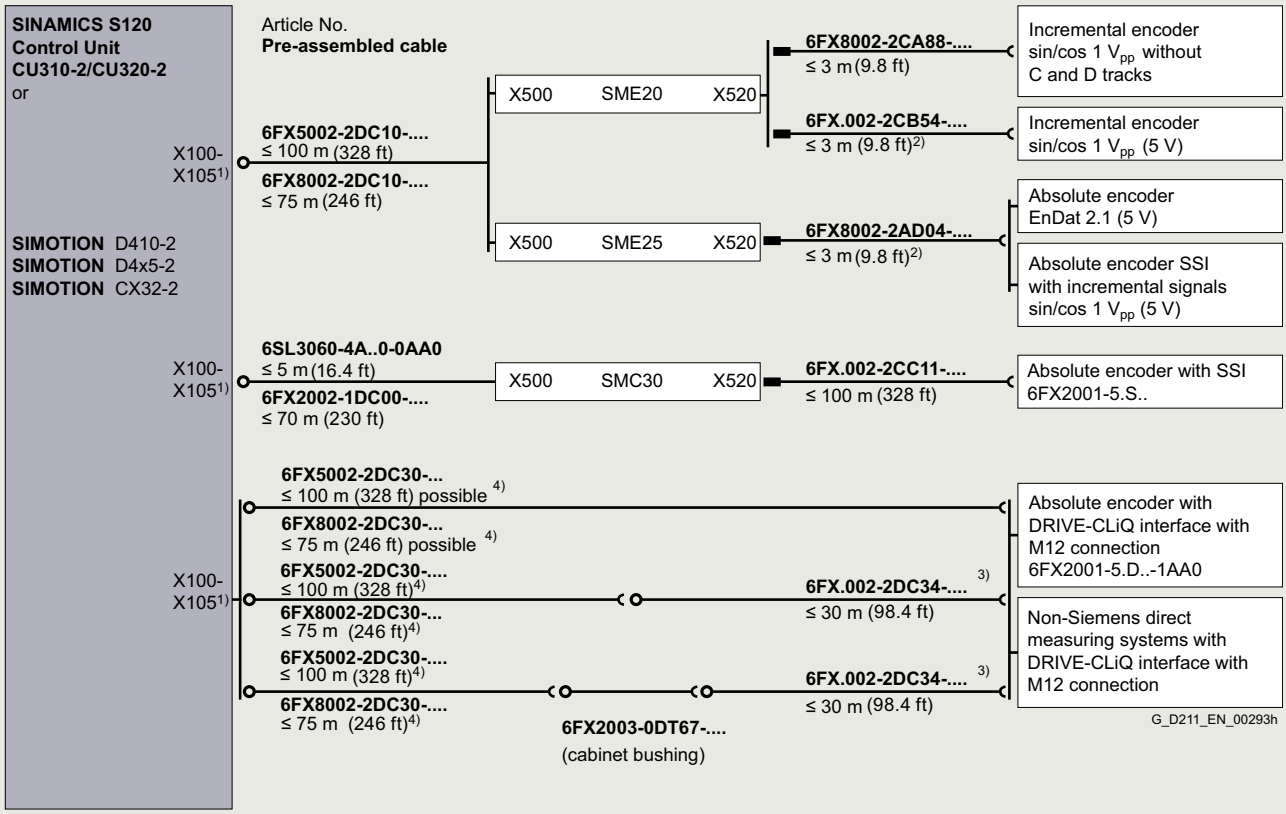

1) For Control Unit CU310-2/SIMOTION D410-2: X100.
For Control Unit CU320-2/SIMOTION D425-2/SIMOTION CX32-2: X100-X103.
For SIMOTION D435-2/D445-2/D455-2: X100-X105.

2) Up to 10 m (32.8 ft) possible, dependent on encoder current consumption.

3) The total cable length (basic cable and extension cable) must not exceed 30 m (98 ft).

4) See connection overview "SIMOTICS motors with RJ45 or M17 connection and external measuring systems with M12 connections" for further connection possibilities.

Connection overview of SINAMICS S120 Sensor Module Cabinet-Mounted SMC10

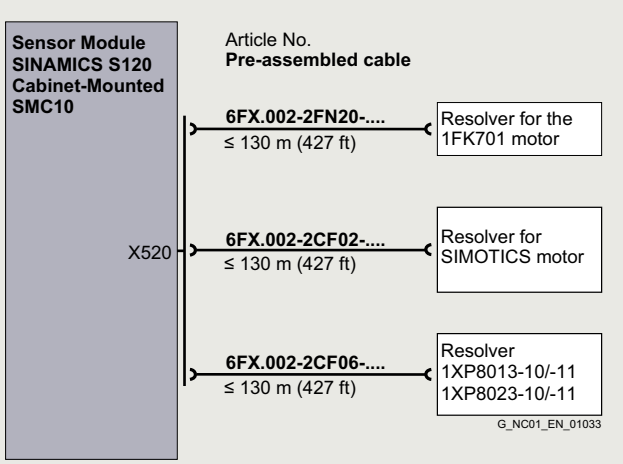

© Siemens 2024

Integration

Connection overview of SINAMICS S120 Sensor Module Cabinet-Mounted SMC20

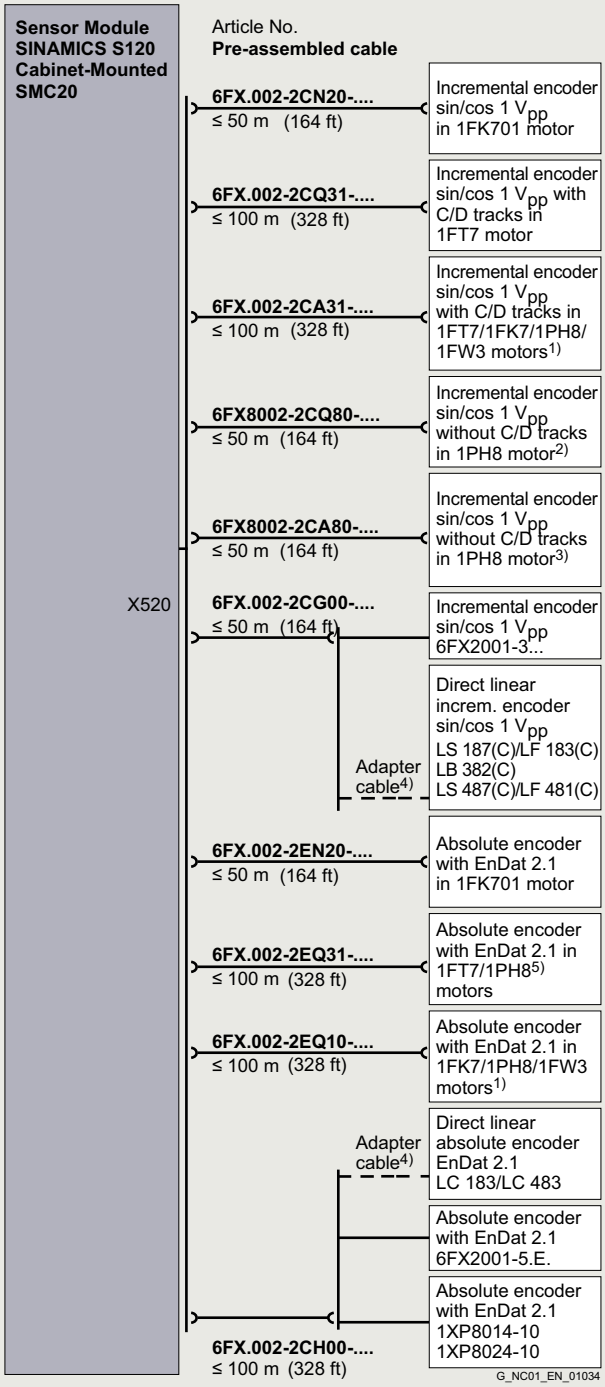

1) 1FW3 motor not suitable for machine tools.
2) Possible for 1PH808/1PH810/1PH813/1PH816 motors for encoders with 512 S/R and 256 S/R.
3) Possible for 1PH8 motors for encoders with 512 S/R and 256 S/R.
4) Adapter cable available from measuring system manufacturer.
5) Possible for 1PH808/1PH810/1PH813/1PH816 motors.

Connection overview of SINAMICS S120 Sensor Module Cabinet-Mounted SMC30

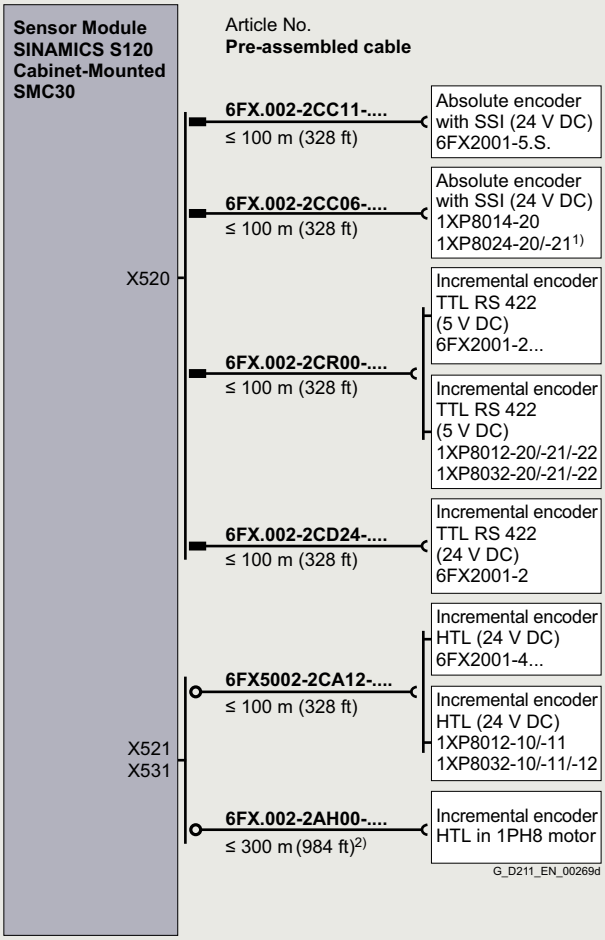

1) For position control only.
2) Applies to HTL encoders with bipolar signal evaluation or for evaluation of difference signals A*, A and B*, B; for HTL encoders with unipolar signal evaluation the permissible cable length is reduced to 100 m (328 ft).

© Siemens 2024

Technical specifications

Signal cables	MOTION-CONNECT 500 6FX50..-.....-....	MOTION-CONNECT 800PLUS 6FX80..-.....-....
Certificates of suitability, according to		
• cURus or UR/CSA	UL758-CSA-C22.2-N.210.2-M90	UL758-CSA-C22.2-N.210.2-M90
• UR-CSA File No. [1]	Yes	Yes
• RoHS conformity	Yes	Yes
Rated voltage according to EN 50395	30 V	30 V
Test voltage, rms	500 V	500 V
Operating temperature on the surface		
• Permanently installed	-20 ... +80 °C (-4.0 ... +176 °F)	-50 ... +80 °C (-58 ... +176 °F)
• Flexible installation	0 ... +60 °C (32 ... 140 °F)	-20 … +60 °C (-4.0 ... 140 °F)
Tensile stress, max.		
• Permanently installed	50 N/mm^2	50 N/mm^2
• Flexible installation	20 N/mm^2	20 N/mm^2
Smallest bending radius		
• Permanently installed	60 mm (2.36 in)	4 × D_{max}
• Flexible installation	100 mm (3.94 in)	70 mm (2.76 in) [2]
Torsional stress	Absolute 30°/m	Absolute 30°/m
Bending operations	2 million	10 million
Traversing speed	180 m/min (591 ft/min)	Up to 300 m/min (984 ft/min)
Acceleration	5 m/s^2 (16.4 ft/s^2)	Up to 50 m/s^2 (164 ft/s^2)
Insulation material, incl. jacket	CFC/silicone-free	CFC/halogen/silicone-free IEC 60754-1/DIN VDE 0472-815
Oil resistance	EN 60811-2-1 (mineral oil only)	EN 60811-2-1
Jacket	PVC DESINA color green RAL 6018	PUR, HD22.10 S2 (VDE 0282, Part 10) DESINA color green RAL 6018
Flame-retardant	EN 60332-1-1 to 1-3	EN 60332-1-1 to 1-3

Degree of protection of the pre-assembled signal cables and their extensions when closed and inserted: IP67.

[1] The File No. is printed on the cable jacket.
[2] Exception: 6FX8002-2SL..-....; smallest bending radius (flexible): 85 mm (3.35 in).

© Siemens 2024

Technical specifications

DRIVE-CLiQ signal cables	DRIVE-CLiQ 6FX2...-1DC..-....	DRIVE-CLiQ MOTION-CONNECT 500 6FX5...-.DC..-....	DRIVE-CLiQ MOTION-CONNECT 800PLUS 6FX8...-.DC..-....
Certificates of suitability, according to • cURus or UR/CSA • UR-CSA File No. [1] • RoHS conformity	 UL STYLE 2502/CSA-N.210.2-M90 Yes Yes	 UL STYLE 2502/CSA-N.210.2-M90 Yes Yes	 UL STYLE 2502/CSA-N.210.2-M90 Yes Yes
Rated voltage according to EN 50395	30 V	30 V	30 V
Test voltage, rms	500 V	500 V	500 V
Operating temperature on the surface • Permanently installed • Flexible installation	 -20 ... +80 °C (-4.0 ... 176 °F) –	 -20 ... +80 °C (-4.0 ... 176 °F) 0 ... +60 °C (32 ... 140 °F)	 -20 ... +80 °C (-4.0 ... 176 °F) -20 ... +60 °C (-4.0 ... 140 °F)
Tensile stress, max. • Permanently installed • Flexible installation	 45 N/mm^2 –	 80 N/mm^2 30 N/mm^2	 50 N/mm^2 20 N/mm^2
Smallest bending radius • Permanently installed • Flexible installation	 50 mm (1.97 in) –	 35 mm (1.38 in) 125 mm (4.92 in)	 35 mm (1.38 in) 75 mm (2.95 in)
Torsional stress	–	Absolute 30°/m	Absolute 30°/m
Bending operations	–	100000	10 million
Traversing speed	–	30 m/min (98.4 ft/min)	300 m/min (984 ft/min)
Acceleration	–	2 m/s^2 (6.56 ft/s^2)	Up to 50 m/s^2 (164 ft/s^2)
Insulation material, incl. jacket	CFC/silicone-free	CFC/silicone-free	CFC/halogen/silicone-free IEC 60754-1/DIN VDE 0472-815
Oil resistance	EN 60811-2-1	EN 60811-2-1 (mineral oil only)	EN 60811-2-1
Jacket	PVC	PVC	PUR, HD22.10 S2 (VDE 0282, Part 10)
	Gray RAL 7032	DESINA color green RAL 6018	DESINA color green RAL 6018
Flame-retardant	EN 60332-1-1 to 1-3	EN 60332-1-1 to 1-3	EN 60332-1-1 to 1-3

Degree of protection of the pre-assembled signal cables and their extensions when closed and inserted: IP67.

[1] The File No. is printed on the cable jacket.

© Siemens 2024

Notes

© Siemens 2024

SINAMICS S120 Cabinet Modules

6

6/2 System overview
6/2 Overview
6/3 Benefits
6/4 Application
6/4 Design
6/5 Function
6/7 Technical specifications

6/8 Air-cooled units
6/17 Line Connection Modules
6/24 Basic Line Modules
6/30 Smart Line Modules
6/34 Active Line Modules incl. Active Interface Modules
6/40 Motor Modules in booksize format
6/44 Motor Modules in chassis format
6/51 Central Braking Modules
6/55 Auxiliary Power Supply Modules
6/58 Customer terminal strip -X55

6/61 Liquid-cooled units
6/73 Basic Line Connection Modules
6/77 Active Line Connection Modules
6/82 Active Line Connection Modules compact
6/88 Motor Modules
6/96 Motor Modules compact
6/100 Auxiliary Power Supply Modules
6/103 Heat Exchanger Modules

6/108 Options
6/108 Overview
6/114 Option selection matrix
6/117 Description of the options

6/134 Supplementary system components
6/134 Mounting device for air-cooled power blocks
6/134 Mounting device for liquid-cooled power units

6/135 Order-specific integration engineering
6/136 Option selection matrix of the order-specific integration engineering

6/137 Customized solutions

© Siemens 2024

Overview

SINAMICS S120 Cabinet Modules, air-cooled and liquid-cooled

SINAMICS S120 Cabinet Modules are the components of a modular cabinet system for multi-motor drives with a central supply infeed and a common DC link busbar, as used, for example, in the process industry, automotive industry, metal processing industry as well as in the crane and mining domains. They are available in air-cooled or liquid-cooled versions. As standard, they are installed side by side in a row. Other installation types (e.g. back to back) are possible on request. SINAMICS S120 Cabinet Modules include the chassis units from the SINAMICS S120 series in booksize format (Motor Modules) and chassis format, thus making the range an ideal supplement to the SINAMICS G150 and SINAMICS S150 cabinet converter series for single-motor drives.

All drive components, from the supply infeed to the motor-side inverters, are configured in a clear, compact layout in the individual Cabinet Modules. They can be flexibly combined and optimally adapted to customer-specific requirements thanks to a comprehensive array of options.

The main components of the air-cooled system are as follows:

- Line Connection Modules with line-side components such as contactors, fuses and circuit breakers, as well as line reactors for Basic Line Modules
- The following types of infeed Line Modules:
  - Basic Line Modules for two-quadrant operation
  - Smart Line Modules for four-quadrant operation
  - Active Line Modules for four-quadrant operation with negligible line harmonics
- Central Braking Modules for braking operation
- The following types of Motor Modules:
  - Booksize Cabinet Kit
  - Chassis
- Control Units
- Auxiliary Power Supply Modules to supply the auxiliary power supply system

The main components of the liquid-cooled system are as follows:

- Active Line Connection Modules as a combination of Line Connection Module and Active Line Module with an Active Interface Module
- Basic Line Connection Modules as a combination of a Line Connection Module and a Basic Line Module
- Motor Modules
- Control Units
- Auxiliary Power Supply Modules to supply the auxiliary power supply system
- Heat Exchanger Modules with pumps, closed-loop control and a heat exchanger between the deionized water and raw water circuits

Standardized interfaces for both the power and the control connections facilitate configuration and installation. Communication between the power modules and the central Control Unit takes place via DRIVE-CLiQ, the internal drive serial interface.

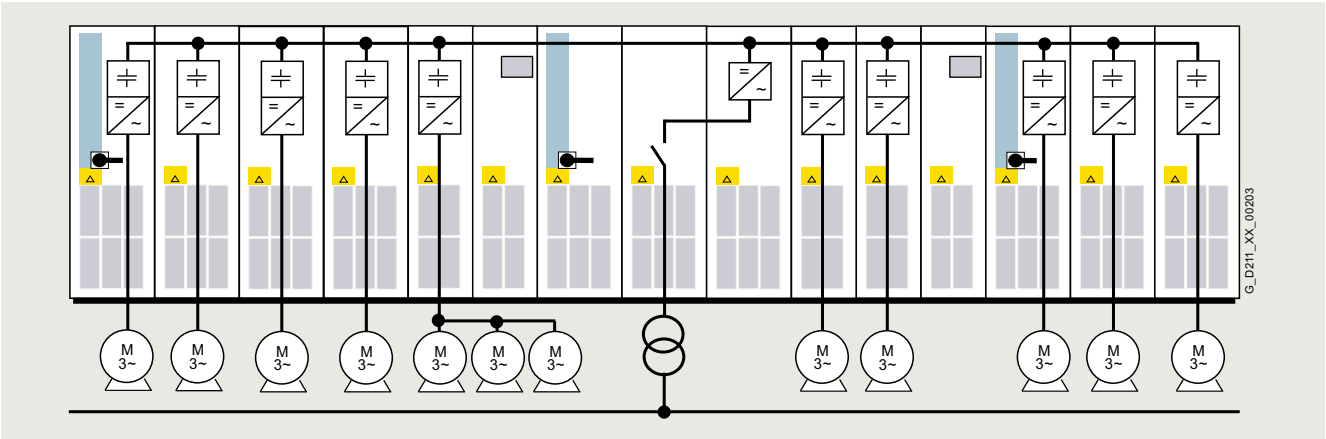

Example of a drive line-up with SINAMICS S120 Cabinet Modules for a multi-motor drive

© Siemens 2024

Overview

The following tables provide an overview of the voltage ranges and power ratings of the available SINAMICS S120 Cabinet Modules.

Voltage ranges and powers for air-cooled SINAMICS S120 Cabinet Modules

	Line voltage	Input current	DC link voltage	DC link current	Output current	Power range of single modules
Line Connection Modules [1]	380 ... 480 V 3 AC	250 ... 3200 A	–	–	–	–
	500 ... 690 V 3 AC	280 ... 3200 A	–	–	–	–
Basic Line Modules [1]	380 ... 480 V 3 AC	365 ... 1630 A	510 ... 650 V	420 ... 1880 A	–	200 ... 900 kW
	500 ... 690 V 3 AC	260 ... 1580 A	675 ... 930 V	300 ... 1880 A	–	250 ... 1500 kW
Smart Line Modules [1]	380 ... 480 V 3 AC	463 ... 1430 A	510 ... 650 V	550 ... 1700 A	–	250 ... 800 kW
	500 ... 690 V 3 AC	463 ... 1430 A	675 ... 930 V	550 ... 1700 A	–	450 ... 1400 kW
Active Line Modules [1]	380 ... 480 V 3 AC	210 ... 1405 A	570 ... 720 V	235 … 1574 A	–	132 ... 900 kW
	500 ... 690 V 3 AC	575 ... 1270 A	750 ... 1035 V	644 ... 1422 A	–	630 ... 1400 kW
Motor Modules booksize	380 ... 480 V 3 AC	–	510 ... 720 V	–	9 ... 132 A	4.8 ... 71 kW
Motor Modules chassis [1]	380 ... 480 V 3 AC	–	510 ... 720 V	–	210 ... 1405 A	110 ... 800 kW
	500 ... 690 V 3 AC	–	675 ... 1035 V	–	85 ... 1270 A	75 ... 1200 kW
Central Braking Modules [1]	380 ... 480 V 3 AC	–	510 ... 720 V	–	–	500 ... 1000 kW
	500 … 600 V 3 AC	–	675 ... 900 V	–	–	550 ... 1100 kW
	660 … 690 V 3 AC	–	890 ... 1035 V	–	–	630 ... 1200 kW
Auxiliary Power Supply Modules	380 ... 690 V 3 AC	125 ... 250 A	–	–	–	–

Voltage ranges and power ratings for liquid-cooled SINAMICS S120 Cabinet Modules

	Line voltage	Input current	DC link voltage	DC link current	Output current	Power range of single modules
Basic Line Connection Modules [1]	380 ... 480 V 3 AC	610 ... 1420 A	510 ... 650 V	740 ... 1730 A	–	360 ... 830 kW
	500 ... 690 V 3 AC	340 ... 1350 A	675 ... 930 V	420 ... 1650 A	–	355 ... 1370 kW
Active Line Connection Modules [1]	380 ... 480 V 3 AC	605 ... 1405 A	570 ... 720 V	677 ... 1573 A	–	380 ... 900 kW
	500 ... 690 V 3 AC	735 ... 1560 A	750 ... 1035 V	823 ... 1740 A	–	800 ... 1700 kW
Motor Modules [1]	380 ... 480 V 3 AC	–	510 ... 720 V	–	210 ... 1405 A	110 ... 800 kW
	500 ... 690 V 3 AC	–	675 ... 1035 V	–	100 ... 1560 A	90 ... 1500 kW
Auxiliary Power Supply Modules	380 ... 690 V 3 AC	25 A	–	–	–	–

Benefits

The outstanding system features of the SINAMICS S120 Cabinet Modules provide the following advantages:

- Process optimization with minimum outlay
  - A standard PROFIBUS or PROFINET interface and various analog and digital interfaces enable easy integration into automation solutions
  - Vector and servo control ensures that they fulfill the most exacting requirements regarding the accuracy and dynamic response of drives.
- High level of reliability and availability
  - Individual modules and power components can be replaced quickly and easily, which ensures a higher level of plant availability
- Energy saving during operation
  - The motor-side inverters are coupled via the common DC link and allow energy to be exchanged between motors that are motoring and generating. This means that energy is saved, there is less load on the supply infeed and line harmonics are reduced
  - Generally the line infeed is only dimensioned for the maximum energy required when motoring or the maximum current required when motoring – and not for the sum of the energy requirements of the Motor Modules connected to the DC link. As a consequence, for example, for conveyor belts or motor test stands with Motor Modules that are simultaneously operated in motoring and generating modes, a significantly smaller line infeed unit can be selected.
- Minimal operative, maintenance, and servicing costs
  - Simple commissioning thanks to the menu-driven commissioning tools SINAMICS Startdrive or STARTER.
  - Optional, menu-navigated AOP30 advanced operator panel with plain text display and bar-type display of process variables.
  - All modules are easily accessible, making them extremely service-friendly
- Space-saving design
- Environmentally-friendly operation
  - The converters are exceptionally quiet and compact thanks to state-of-the-art IGBT power semiconductors and an innovative cooling concept

[1] The power can be increased by connecting up to four identical modules in parallel.

© Siemens 2024

Application

SINAMICS S120 Cabinet Modules have been specially developed to allow simple configuration of multi-motor systems. They are used for applications where several motors must be coordinated to realize a drive task as multi-motor drives in a drive line-up. Examples of such applications include:

- Packaging machines
- Plastics processing machines
- Textile machines
- Presses and punches
- Rolling mill drives
- Hoists and cranes
- Printing and paper machines
- Vehicle and gearbox test bays
- Test bay applications
- Machines used in the woodworking, glass and ceramics industries
- Handling and assembly systems
- Machine tools

High-power single-motor drives (parallel connection) can also be implemented with Cabinet Modules.

Design

The devices have been designed according to the zone concept principle and therefore offer the highest possible level of operational reliability. EMC measures have been rigorously implemented. With the help of simulated conditions, partitions have been designed to act as air guides and heat dissipation units.

Special measures used in the construction of the cabinets ensure that they remain mechanically durable over their entire life cycle.

Attention has been paid to providing a wide range of cable routing options and special design concepts are applied consistently to broaden the scope of application and simplify service. The units have all the necessary connections and connecting elements. Thanks to their carefully considered configuration concept, cabinets are shipped in a ready-to-connect state or, in the case of multiple transport units, have been prepared for quick assembly. An extensive spectrum of options designed to adapt the units to a variety of different applications facilitates the selection process.

All components, from individual parts to the ready-to-connect cabinet, undergo rigorous testing throughout the entire production process. This guarantees a high level of functional reliability during installation and commissioning, as well as in operation.

Replaceable components have been designed so that they can be quickly and easily replaced. In addition, the "Spares On Web" internet tool makes it easy to view the spare parts that are available for the particular order at all times [1].

System design

Line Modules are coupled with the various Motor Modules by means of prefabricated busbar sets with different current carrying capacities.

All standard busbars, as well as electronics components, are protected against environmental influences. This is achieved through the use of nickel-plated copper bars and painted modules throughout.

Auxiliary power supply system

A special, standard auxiliary power supply system supplies the individual Cabinet Modules with the required auxiliary voltages for the power components, fans and 24 V loads.

These voltages are preferably generated using an Auxiliary Power Supply Module. Additional supply possibilities are available using the **K76** option (auxiliary power supply generation in the Line Connection Module) or using an external supply in the auxiliary power supply system.

The auxiliary power supply system comprises one Auxiliary Power Supply Module with two terminal blocks (air cooling) and one connecting terminal with two terminal blocks (liquid cooling) and a 24 V DC fuse as well as the required connecting cables. It is supplied completely assembled and ready to operate. Only the cable connections to the adjacent Cabinet Module must be established on-site.

DRIVE-CLiQ communication

Communication between the Control Unit, power units and other active SINAMICS components is realized via DRIVE-CLiQ connections.

DRIVE-CLiQ is an internal serial interface of the drive that enables fast and easy configuration of the complete drive line-up with prefabricated cables in varying lengths.

Transport units

The Cabinet Modules can be optionally supplied in pre-configured transport units up to a total length of 2400 mm. This option is particularly recommended in air-cooled Cabinet Modules for Line Modules together with Line Connection Modules since, in this case, the Line Connection Module must be equipped with a pre-charging DC link or line reactors (depending on the type of Line Module), in addition to the electrical interface (busbar). For liquid-cooled Cabinet Modules, delivery in transport units has the advantage that the tube system of the cooling system can be implemented completely without couplings. Transport units thus enable the various devices to be quickly and easily assembled on-site.

Coated modules

The following devices are equipped as standard with coated modules:

- Booksize format units
- Chassis format units
- Control Units
- Sensor Modules
- Terminal Modules
- Advanced Operator Panel (AOP30)

The coating on the modules protects the sensitive SMD components against corrosive gases, chemically active dust and moisture.

Nickel-plated busbars

All of the copper busbars used in the converter cabinets are nickel-plated to achieve the best possible immunity to environmental effects. Furthermore, there is no need to clean the contacts on the customer terminals as otherwise required for bare copper connections.

Note:
With some options, parts of the copper busbars cannot be nickel-plated for technical reasons.

[1] The properties of the SINAMICS S120 Cabinet Modules described in this catalog are not transferable to cabinet units constructed to meet the requirements of specific applications.

© Siemens 2024

Design

PE bars

The Cabinet Modules are delivered with a PE bar as standard. It is used to connect and fasten PE conductors.

Degrees of protection of Cabinet Modules

The EN 60529 standard covers the protection of electrical equipment by means of housings, covers or equivalent, and includes:

- Protection of persons against accidental contact with live or moving parts within the housing and protection of the equipment against the ingress of solid foreign bodies (touch protection and protection against ingress of solid foreign bodies)
- Protection of the equipment against the ingress of water (water protection)
- Abbreviations for the internationally agreed degrees of protection

The degrees of protection are specified by abbreviations comprising the code letters IP and two digits.

Degree of protection	**First code number** (touch protection and protection against solid foreign bodies)	**Second code number** (protection of the equipment against the ingress of water)
IP20 (Standard for air-cooled version)	Protected against solid foreign bodies Diameter ≥ 12.5 mm	No water protection
IP21 (Standard for liquid-cooled version, option **M21** for air-cooled version)	Protected against solid foreign bodies Diameter ≥ 12.5 mm	Protected against drip water Vertically falling water drops shall not have a harmful effect.
IP23 (Option **M23**)	Protected against solid foreign bodies Diameter ≥ 12.5 mm	Protected against spray water Water sprayed on both sides of the vertical at an angle of up to 60° shall not have a harmful effect.
IP43 (Option **M43**)	Protected against solid foreign bodies Diameter ≥ 1 mm	Protected against spray water Water sprayed on both sides of the vertical at an angle of up to 60° shall not have a harmful effect.
IP54 (Option **M54**)	Dust protected Ingress of dust is not totally prevented, but dust must not be allowed to enter in such quantities that the functioning or safety of the equipment is impaired. Complete touch protection	Protected against splash water Water splashing onto the enclosure from any direction shall not have a harmful effect.
IP55 (Liquid-cooled version only) (Option **M55**)	Dust protected Ingress of dust is not totally prevented, but dust must not be allowed to enter in such quantities that the functioning or safety of the equipment is impaired. Complete touch protection	Protected against water jet (nozzle) Water projected by a nozzle against the enclosure from any direction shall not have a harmful effect.

Air-cooled Cabinet Modules meet degree of protection IP20, liquid-cooled Cabinet Modules degree of protection IP21, as standard. Heat Exchanger Modules have degree of protection IP55 as standard.

Function

Communication with higher-level controller and customer terminal strip

As the customer interface to the control system, a PROFIBUS interface is available on the CU320-2 DP Control Unit or a PROFINET interface on the CU320-2 PN Control Unit as standard.

In the case of the air-cooled Cabinet Modules, the inputs and outputs available as standard on the customer terminal strip - X55, which are easy to access and easy to connect up, can be provided.
In the case of the liquid-cooled Cabinet Modules, the components are directly connected.

For further information, please refer to the SINAMICS Low Voltage Engineering Manual.

Open-loop and closed-loop control functions

SINAMICS S120 can use a dynamic, high-precision closed-loop vector control (drive object type VECTOR), or a highly dynamic closed-loop servo control (drive object type SERVO).

© Siemens 2024

Function

Software and protective functions

The software functions available as standard are described below:

Software and protective functions	Description
Setpoint input	The setpoint can be specified both internally and externally; internally as a fixed setpoint, motorized potentiometer setpoint or jog setpoint, externally via the communications interface or an analog input. The internal fixed setpoint and the motorized potentiometer setpoint can be switched or adjusted via control commands from any interface.
Motor identification	The automatic motor identification function makes commissioning faster and easier and optimizes closed-loop control of the drive.
Ramp-function generator	A user-friendly ramp-function generator with separately adjustable ramp-up and ramp-down times, together with adjustable rounding times in the lower and upper speed ranges, allows the drive to be smoothly accelerated and braked. This results in a good speed control response and plays its role in reducing the stress on the mechanical system. The down ramp can be parameterized separately for a quick stop.
$V_{dc\ max}$ controller	The $V_{dc\ max}$ controller automatically prevents overvoltages in the DC link, if the set down ramp is too short, for example. This may also extend the set ramp-down time. Note: This function only makes sense for single-axis applications.
Kinetic buffering (KIP)	For brief line supply failures, the kinetic energy of the rotating drive is used to buffer the DC link and therefore prevents fault trips. The converter remains operational as long as the drive can provide regenerative energy as a result of its motion and the DC link voltage does not drop below the shutdown threshold. When the line supply recovers within this time, the drive is again bumplessly accelerated up to its setpoint speed.
Automatic restart	The automatic restart switches the drive on again when the power is restored after a power failure, and ramps up to the current speed setpoint.
Flying restart	The flying restart function allows the converter to be switched to a motor that is still turning. With the voltage sensing capability provided by the optional VSM10, the flying restart time for large induction motors can be significantly reduced because the motor does not need to be de-magnetized.
Technology controller	Using the technology controller (PID controller) function module, level or flow controls and complex tension controls can be implemented, for example. The existing D component can act both on the system deviation as well as on the actual value (factory setting). The P, I, and D components are set separately.
Free function blocks (FFB)	Using the freely programmable function blocks, it is easy to implement logic and arithmetic functions for controlling the SINAMICS drive. The blocks can be programmed at the operator panel or the commissioning tools SINAMICS Startdrive or STARTER.
Drive Control Chart (DCC)	Drive Control Chart (DCC) is an additional tool for the easy configuration of technological functions for SINAMICS. The block library contains a large selection of control, arithmetic and logic blocks as well as extensive open-loop and closed-loop control functions. The user-friendly DCC editor enables easy graphics-based configuration, allows control loop structures to be clearly represented and provides a high degree of reusability of charts that have already been created. DCC is an add-on for the commissioning tools SINAMICS Startdrive or STARTER (→ Tools and Engineering).
SINAMICS Technology Extensions (SINAMICS TEC)	The SINAMICS TEC are configurable functions or Siemens technologies that can be added to extend firmware functions. These extensions are designed to allow implementation of highly complex, application-specific tasks for various sectors - such as storage and retrieval machines. Additional information about Technology Extensions (TEC) is provided in the "Technology functions" section.
I^2t recording for motor protection	A motor model stored in the converter software calculates the motor temperature based on the current speed and load. More exact sensing of the temperature, which also takes into account the influence of the ambient temperature, is possible by means of direct temperature sensing using Pt1000/KTY84 sensors in the motor winding.
Motor temperature evaluation	Motor protection by evaluating a KTY84, PTC, Pt100 or Pt1000 temperature sensor. When a KTY84 temperature sensor is connected, the limit values can be set for alarm or shutdown. When a PTC thermistor is connected, the system reaction to triggering of the thermistor (alarm or trip) can be defined.
Motor blocking protection	A blocked motor is detected and protected against thermal overloading by a fault trip.
Brake control	"Simple brake control" for controlling holding brakes: The holding brake is used to secure drives against unwanted motion when deactivated. The "extended braking control" function module allows complex braking control, for example, for motor holding brakes and operational brakes. In the case of brakes with feedback signal, the brake control reacts to the feedback contacts of the brake.
Write protection	Write protection to prevent unintentional changing of the setting parameters (without password function).
Know-how protection	Know-how protection for encrypting stored data, e.g. to protect expert configuring knowledge, and to protect against modification and duplication (with password function).
Web server	The web server provides information about the drive unit via its web pages. The web server is accessed using a web browser via unsecured (http) or secured transfer protocol (https).

Power unit protection

Power unit protection	Description
Ground fault monitoring at the output	A ground fault at the output is detected by a total current monitor and results in shutdown in grounded systems.
Electronic short-circuit protection at the output	A short-circuit at the output (e.g. at the converter output terminals, in the motor cable or in the motor terminal box) is detected and the converter shuts down with a "fault".
Thermal overload protection	An alarm is issued first when the overtemperature threshold responds. If the temperature continues to rise, the unit either shuts down or independently adjusts the pulse frequency or output current so that thermal load is reduced. Once the cause of the fault has been eliminated (e.g. cooling has been improved), the original operating values are automatically resumed.

© Siemens 2024

Technical specifications

The most important directives and standards are listed below. These are used as basis for the SINAMICS S120 Cabinet Modules and they must be carefully observed to achieve an EMC-compliant configuration that is safe both in terms of functionality and in operation.

European directives	
2014/35/EU	Low-voltage Directive: Directive of the European Parliament and Council of February 26, 2014 on the harmonization of the laws of the member states relating to the making available on the market of electrical equipment designed for use within certain voltage limits (recast)
2014/30/EU	EMC Directive: Directive of the European Parliament and Council of February 26, 2014 on the harmonization of the laws of the member states relating to electromagnetic compatibility (recast)
2006/42/EC	Machinery Directive: Directive of the European Parliament and Council of May 17, 2006, on machinery and amending Directive 95/16/EC (recast).
2011/65/EU	RoHS II Directive: Directive of the European Parliament and of the Council of 8 June 2011 on the restriction of the use of certain hazardous substances in electrical and electronic equipment (recast)
European standards	
EN ISO 3744	Acoustics – Determination of sound power levels and sound energy levels of noise sources using sound pressure – Engineering methods for an essentially free field over a reflecting plane
EN ISO 13849-1	Safety of machinery – Safety-related parts of control systems; Part 1: General principles for design (EN ISO 13849-1: 2006)
EN 60146-1-1	Semiconductor converters – General requirements and line-commutated converters Part 1-1: Specification of basic requirements
EN 60204-1	Safety of machinery – Electrical equipment of machines; Part 1: General requirements
EN 60529	Degrees of protection provided by enclosures (IP code)
IEC 61508-1	Functional safety of electrical/electronic/programmable electronic safety-related systems Part 1: General requirements
IEC 61508-2	Functional safety of electrical/electronic/programmable electronic safety-related systems Part 2: Requirements for electrical/electronic/programmable electronic safety-related systems
IEC 61508-3	Functional safety of electrical/electronic/programmable electronic safety-related systems Part 3: Software requirements
EN 61800-2	Adjustable speed electrical power drive systems Part 2: General requirements – Rating specifications for low voltage adjustable frequency AC power drive systems
EN 61800-3	Adjustable speed electrical power drive systems Part 3: EMC requirements and specific test methods
EN 61800-5-1	Adjustable speed electrical power drive systems Part 5: Safety requirements Main section 1: Electrical and thermal requirements
EN 61800-5-2	Adjustable speed electrical power drive systems Part 5-2: Safety requirements – Functional safety (IEC 61800-5-2: 2007)

© Siemens 2024

Overview

Line Modules

Power is fed to the drive line-up via Line Modules, which generate a DC voltage from the line voltage and, therefore, supply energy to the Motor Modules connected to the DC link. They are suitable for connection to grounded TN/TT and non-grounded IT systems.

The Line Modules are connected to the line supply system via Line Connection Modules and are equipped as standard according to Category C3. Category C3 is part of the "second environment" (in accordance with EN 61800-3). The “second environment” constitutes locations outside residential areas or industrial sites which are supplied from the medium-voltage network via a separate transformer.

The range of Line Modules has power ratings from 132 kW to 900 kW (380 V to 480 V) and from 250 kW to 1500 kW (500 V to 690 V). Furthermore, up to four identical Line Modules can be connected in parallel in order to increase the power rating.

For a compact configuration, Line Connection Modules up to input currents of 3200 A are available. Two Line Modules can be operated in parallel on these Line Connection Modules.

The following types of Line Modules are available:

- Basic Line Modules
- Smart Line Modules
- Active Line Modules

Basic Line Modules

Basic Line Modules are designed only for infeed operation, i.e. they are not capable of recovering energy to the line supply.

If regenerative energy is produced, e.g. when the drives brake, then it must be converted to heat by means of a Braking Module and a braking resistor.

When a Basic Line Module is used as the infeed, a line reactor appropriate to the supply conditions must be installed. Line reactors are generally required if two or more Basic Line Modules are operated in parallel on a common supply system in order to increase power.

For this reason, line reactors are installed in the appropriate Line Connection Module as standard.

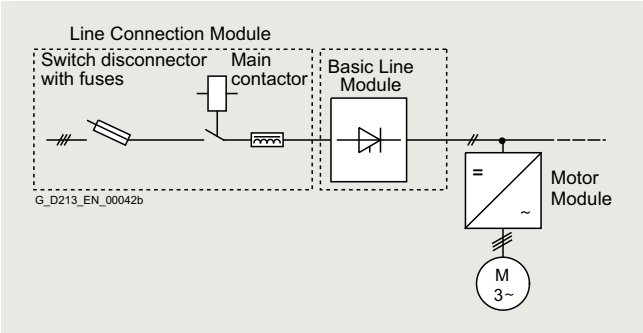

Line Connection Module with Basic Line Module ≤800 A

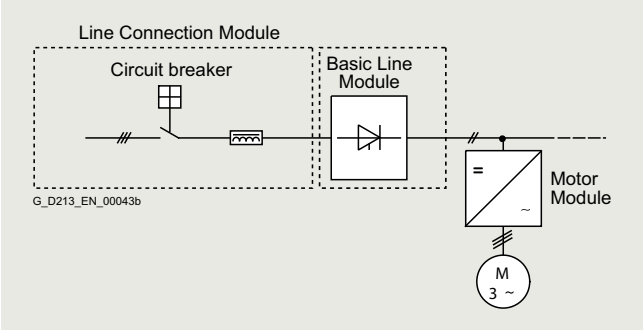

Line Connection Module with Basic Line Module >800 A

If, for example, a converter transformer is used to connect to the line supply (12-pulse operation), it may be possible to omit line reactors (depending on the supply conditions on site) and they can be optionally deselected (option **L22** for a Line Connection Module combined with a Basic Line Module).

For a compact configuration, Line Connection Modules with input currents of up to 3200 A are available. Two Basic Line Modules can be operated in parallel on these Line Connection Modules. Versions with line-side fuses are available for parallel connections in order to provide selective protection of the individual Basic Line Modules.

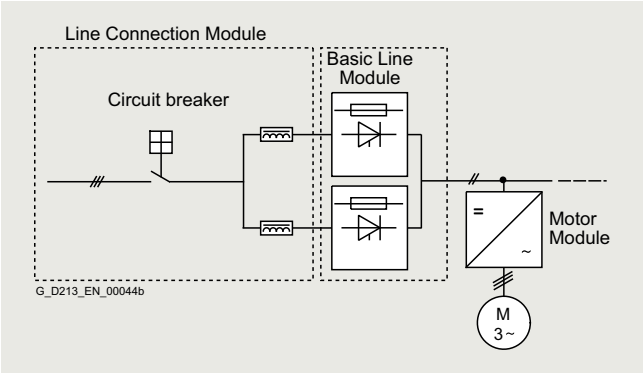

Line Connection Module with Basic Line Modules connected in parallel

© Siemens 2024

Overview

Smart Line Modules

Smart Line Modules can supply energy to the DC link and return regenerative energy to the supply system. A Braking Module and braking resistor are required only if the drives need to be decelerated in a controlled manner after a power failure (i.e. when energy cannot be recovered to the supply). When a Smart Line Module is used as the infeed, the necessary line reactor is included in the device as standard and can be optionally deselected (option **L22**).

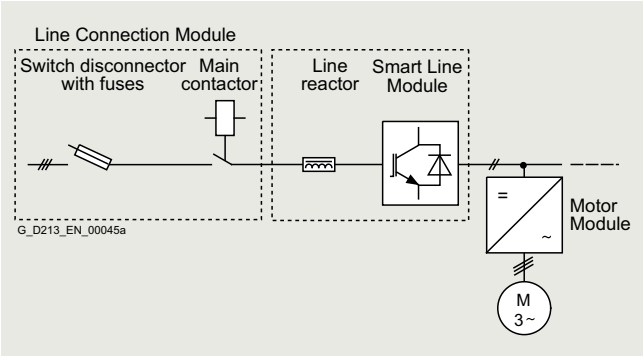

Line Connection Module with Smart Line Module ≤800 A

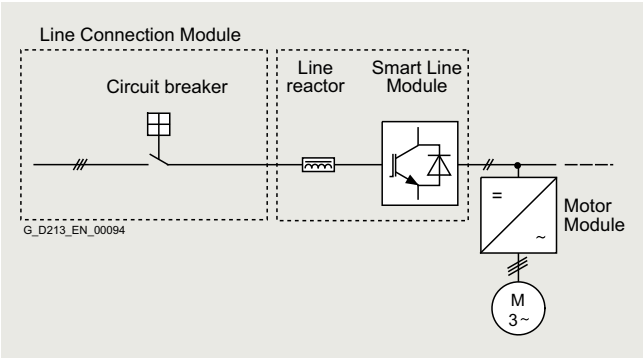

Line Connection Module with Smart Line Module >800 A

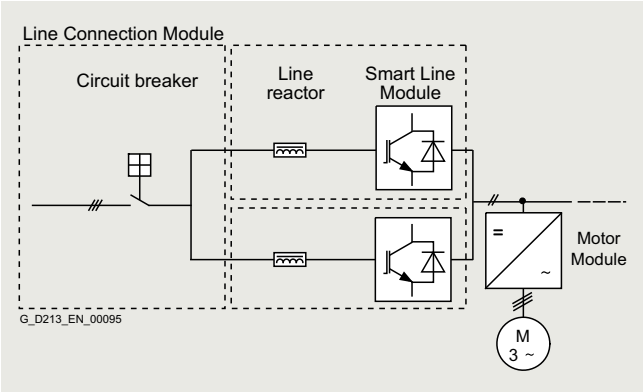

Line Connection Module with Smart Line Modules connected in parallel

Active Line Modules

Active Line Modules can supply energy to the DC link and return regenerative energy to the supply system. A Braking Module and braking resistor are required only if the drives need to be decelerated in a controlled manner after a power failure (i.e. when energy cannot be recovered to the supply).

In contrast to Basic Line Modules and Smart Line Modules, however, Active Line Modules generate a regulated DC voltage which remains constant despite fluctuations in the line voltage. However, in this case, the line voltage must remain within the permissible tolerance range. Active Line Modules in combination with an Active Interface Module draw a virtually sinusoidal current from the supply system. Almost no harmonics occur. The total harmonic distortion factors of the current THD(I) and voltage THD(U) are typically in the range of approx. 3 % for rated current. THD(I) is calculated according to IEEE 519 (2014) and THD(U) according to IEC 61000-2-4 (2002). The stringent limit values of IEEE 519 (2014) are typically complied with.

Active Line Modules must always be used in conjunction with an Active Interface Module. Active Interface Modules include the required pre-charging circuit for the Active Line Module in addition to a Clean Power Filter. For SINAMICS S120 Cabinet Modules, these two components are always regarded as a single unit.

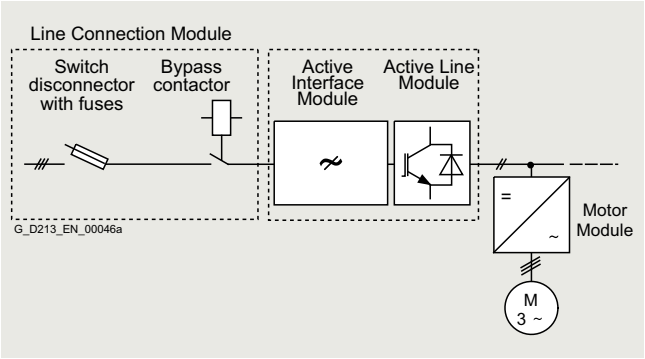

Line Connection Module with Active Interface Module and Active Line Module ≤ 800 A (example frame size HX + HI)

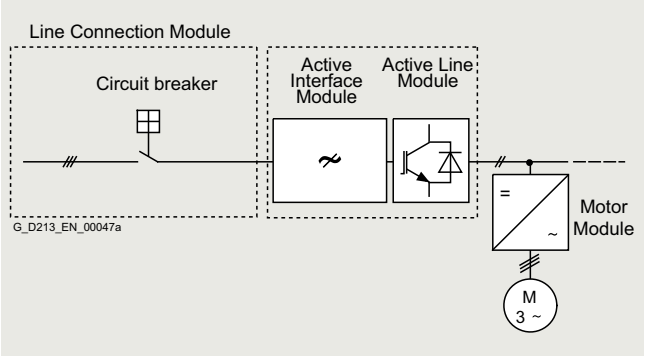

Line Connection Module with Active Interface Module and Active Line Module >800 A

© Siemens 2024

Overview

In the example, two units comprising an Active Interface Module and Active Line Module are connected in parallel to jointly supply the DC link.

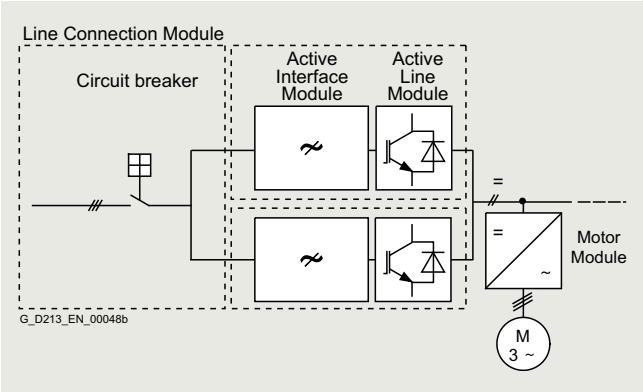

Line Connection Module with Active Interface Modules and Active Line Modules connected in parallel

DC link components

Braking Modules enable braking resistors to absorb the regenerative energy produced during drive deceleration, which is then converted into heat. Using a Braking Module and a braking resistor, it is possible to brake motors even when the power fails.

Braking Modules as a Line Module or Motor Module option

For lower braking powers, Braking Modules are available with continuous braking powers up to 50 kW. These Braking Modules are ordered as an option for the Line Modules and Motor Modules (order codes **L61**/**L64** (25 kW) or **L62/L65** (50 kW), refer to the option description).

Central Braking Modules

For higher continuous braking powers, separate Central Braking Modules are available. These modules are used centrally in the drive line-up. To increase the braking power, up to four Central Braking Modules can be connected in parallel in the drive line-up.

Motor Modules

There are two different types of Motor Modules available with the SINAMICS S120 Cabinet Modules drive system.

Booksize Base Cabinets with Booksize Cabinet Kits

Motor Modules at the low end of the power range from 4.8 kW to 71 kW (380 V to 480 V) can be implemented as Booksize Cabinet Kits installed in Booksize Base Cabinets.

Chassis Cabinets

Each Chassis Cabinet is fitted with one SINAMICS S120 Motor Module in chassis format and covers the power range from 75 kW to 1200 kW (380 V to 480 V or 500 V to 690 V). The power rating can be extended up to approx. 4500 kW by connecting up to four Motor Modules in chassis format in parallel.

SINAMICS S120 Motor Modules in chassis format can also be used as Braking Modules (braking choppers) if a 3-phase braking resistor is connected instead of a motor.
For more information on this topic, please refer to the SINAMICS Low Voltage Engineering Manual.

Auxiliary Power Supply Modules

Auxiliary Power Supply Modules supply power to the auxiliary power supply system of the SINAMICS S120 Cabinet Modules.

Units connected to this auxiliary power supply system include the fans of the SINAMICS S120 devices installed in the Cabinet Modules. In addition, the auxiliary power supply system supplies the electronic modules with an external 24 V DC voltage. This is required when the DC link is not charged, for instance, in order to maintain PROFIBUS or PROFINET communication.

© Siemens 2024

Technical specifications

General technical specifications

Electrical specifications	
Line voltages	380 ... 480 V 3 AC, ±10 % (-15 % <1 min) 500 … 690 V 3 AC, ±10 % (-15 % <1 min)
Line supply types	Grounded TN/TT systems and non-grounded IT systems
Line frequency	47 ... 63 Hz
Output frequency [1] • Control mode Servo • Control mode Vector • Control mode V/f	 0 ... 550 Hz 0 ... 550 Hz 0 ... 550 Hz
Line power factor Fundamental • Basic Line Module • Smart Line Module • Active Line Module	 >0.96 >0.96 Adjustable (factory-set to cos φ = 1)
Efficiency • Basic Line Module • Smart Line Module • Active Line Module • Motor Module	 >99 % >98.5 % >97.5 % (including Active Interface Module) >98.5 %
Overvoltage category	III acc. to EN 61800-5-1
Control method	Vector/Servo control with and without encoder or V/f control
Fixed speeds	15 fixed speeds plus 1 minimum speed, parameterizable (in the default setting, 3 fixed setpoints plus 1 minimum speed are selectable using terminal strip/PROFIBUS/PROFINET)
Skippable speed ranges	4, parameterizable
Setpoint resolution	0.001 r/min digital (14 bits + sign) 12 bits analog
Braking operation	With Active Line Modules and Smart Line Modules, four-quadrant operation as standard (energy recovery). With Basic Line Modules, two-quadrant operation as standard, braking by means of an optional braking chopper, or alternatively by a Motor Module.
Cabinet system	
Cabinet system	Rittal TS 8, doors with double-bit key, three-section base plates for cable entry
Paint finish	RAL 7035 (indoor requirements)
Mechanical specifications	
Degree of protection	IP20 (higher degrees of protection up to IP54 optional)
Protection class	I acc. to EN 61800-5-1
Touch protection	EN 50274/DGUV regulation 3 when used as intended
Cooling method	Forced air cooling AF according to EN 60146

Ambient conditions	Storage [2]	Transport [2]	Operation
Ambient temperature	-25 ... +55 °C (-13 ... 131 °F)	-25 ... +70 °C (-13 ... +158 °F) from -40 °C (-40 °F) for 24 hours	0 ... +40 °C (32 ... 104 °F) To +50 °C (122 °F) see derating data
Relative humidity (condensation not permissible)	5 ... 95 % Class 1K4 acc. to IEC 60721-3-1 (1997)	5 ... 95 % at 40 °C (104 °F) Class 2K3 acc. to IEC 60721-3-2 (1997)	5 ... 95 % Class 3K3 acc. to IEC 60721-3-3 (2002)
Environmental class/harmful chemical substances	Class 1C2 acc. to EN 60721-3-1 (1997)	Class 2C2 acc. to EN 60721-3-2 (1997)	Class 3C2 acc. to EN 60721-3-3 (2002)
Organic/biological influences	Class 1B1 acc. to EN 60721-3-1 (1997)	Class 2B1 acc. to EN 60721-3-2 (1997)	Class 3B1 acc. to EN 60721-3-3 (2002)
Mechanically active substances	Class 1S1 acc. to EN 60721-3-1 (1997)	Class 2S1 acc. to EN 60721-3-2 (1997)	Class 3S1 acc. to EN 60721-3-3 (2002)
Degree of pollution	2 acc. to IEC/EN 61800-5-1		
Installation altitude	Cabinet Modules chassis format: ≤2000 m (6562 ft) above sea level without derating, >2000 m (6562 ft), see characteristic curves/derating data For Booksize Cabinet Kit format Motor Modules as well as Central Braking Modules: ≤ 1000 m (3281 ft) above sea level without derating, > 1000 m (3281 ft), see characteristic curves/derating data		

Deviations from the specified class are underlined.

[1] Higher output frequencies available on request.

[2] In transport packaging.

© Siemens 2024

Technical specifications

Mechanical stability	Storage [1]	Transport [1]	Operation
Vibratory load	Class 1M2 acc. to EN 60721-3-1 (1997)	Class 2M2 acc. to EN 60721-3-2 (1997)	–
• Deflection	1.5 mm (0.06 in) at 5 ... 9 Hz	3.1 mm (0.12 in) at 5 ... 9 Hz	0.075 mm (0.003 in) at 10 ... 58 Hz
• Acceleration	5 m/s² (16.4 ft/s²) at >9 ... 200 Hz	10 m/s² (32.8 ft/s²) at >9 ... 200 Hz	9.8 m/s² (32.2 ft/s²) at >58 ... 200 Hz
Shock load	Class 1M2 acc. to EN 60721-3-1 (1997)	Class 2M2 acc. to EN 60721-3-2 (1997)	Class 3M1 acc. to EN 60721-3-3 (2002)
• Acceleration	40 m/s² (131 ft/s²) at 22 ms	100 m/s² (328 ft/s²) at 11 ms	Test values acc. to EN 60068-2-27 test Ea: 5 g, 30 ms, 3 shocks

Compliance with standards	
Conformances/certificates of suitability, according to	CE (EMC Directive 2014/30/EU, Low Voltage Directive 2014/35/EU, and Machinery Directive 2006/42/EC for functional safety) RCM, RoHS II, UKCA, marine certification DNV, CCS (Type approval, only in combination with the Option **M66**) Green Passport: Option B50 creates a form for the material declaration according to Green Passport.
Radio interference suppression	SINAMICS converter systems are not designed for connection to the public grid (first environment). Radio interference suppression is compliant with the EMC product standard for variable-speed drives EN 61800-3, "Second environment" (industrial networks). EMC disturbances can occur when connected to the public grid. However, if additional measures are taken (e.g. → line filter), it can also be operated in the "first environment".

Deviations from the specified class are underlined.

[1] In transport packaging.

© Siemens 2024

Characteristic curves

Derating data for the chassis format

SINAMICS S120 Cabinet Modules and the associated system components are rated for an ambient temperature of 40 °C and installation altitudes up to 2000 m above sea level.

At ambient temperatures > 40 °C, the output current must be reduced. Ambient temperatures above 50 °C are not permissible.

At installation altitudes > 2000 m above sea level, it must be taken into account that the air pressure, and therefore air density, decreases as the height increases. As a consequence, the cooling efficiency and the insulation capacity of the air also decrease.

Due to the reduced cooling efficiency, it is necessary to both reduce the ambient temperature and lower heat loss in the Cabinet Module by reducing the output current, whereby ambient temperatures lower than 40 °C may be offset to compensate.

The following table specifies the permissible output currents as a function of the installation altitude and ambient temperature for the various degrees of protection. (The permissible compensation between installation altitude and the ambient temperatures < 40 °C – air intake temperature at the entry to the Cabinet Module – has been taken into account in the specified values.)

The values apply under the precondition that it is guaranteed that the cooling air, as specified in the technical data, flows through the units as a result of the cabinet arrangement.

As an additional measure for installation altitudes from 2000 m up to 5000 m, an isolating transformer is required in order to reduce transient overvoltages according to EN 60664-1.
For additional information, please refer to the SINAMICS Low Voltage Engineering Manual.

Current-derating factors for Cabinet Modules as a function of the ambient/air intake temperature, the installation altitude and the degree of protection

Degree of protection	Installation altitude above sea level	**Current derating factor** (as a percentage of the rated current) for an ambient/air intake temperature of						
	m (ft)	20 °C (68 °F)	25 °C (77 °F)	30 °C (86 °F)	35 °C (95 °F)	40 °C (104 °F)	45 °C (113 °F)	50 °C (122 °F)
IP20, IP21, IP23, IP43	0 ... 2000 (0 ... 6562)						**93.3 %**	**86.7 %**
	2001 ... 2500 (6565 ... 8202)					**96.3 %**		
	2501 ... 3000 (8205 ... 9843)		100 %		**98.7 %**			
	3001 ... 3500 (9846 ... 11483)							
	3501 ... 4000 (11486 ... 13123)			**96.3 %**				
	4001 ... 4500 (13127 ... 14764)		**97.5 %**					
	4501 ... 5000 (14767 ... 16404)	**98.2 %**						
IP54	0 ... 2000 (0 ... 6562)					**93.3 %**	**86.7 %**	**80 %**
	2001 ... 2500 (6565 ... 8202)				**96.3 %**	**89.8 %**		
	2501 ... 3000 (8205 ... 9843)		100 %	**98.7 %**	**92.5 %**			
	3001 ... 3500 (9846 ... 11483)			**94.7 %**				
	3501 ... 4000 (11486 ... 13123)		**96.3 %**	**90.7 %**				
	4001 ... 4500 (13127 ... 14764)	**97.5 %**	**92.1 %**					
	4501 ... 5000 (14767 ... 16404)	**93 %**						

© Siemens 2024

Characteristic curves

Current derating for SINAMICS S120 Motor Modules, chassis format as a function of the pulse frequency

To reduce motor noise or to increase output frequency, the pulse frequency can be increased relative to the factory setting (1.25 kHz or 2 kHz). When the pulse frequency is increased, the derating factor of the output current must be taken into account. This derating factor must be applied to the currents specified in the technical specifications.
For additional information, please refer to the SINAMICS Low Voltage Engineering Manual.

Derating factor of the output current as a function of the pulse frequency for units with a rated pulse frequency of 2 kHz

Motor Module in chassis format	Type rating at 400 V	Output current at 2 kHz	**Derating factor** at pulse frequency				
6SL3720-...	kW	A	2.5 kHz	4 kHz	5 kHz	7.5 kHz	8 kHz
380 ... 480 V 3 AC							
1TE32-1AA3	110	210	95 %	82 %	74 %	54 %	50 %
1TE32-6AA3	132	260	95 %	83 %	74 %	54 %	50 %
1TE33-1AA3	160	310	97 %	88 %	78 %	54 %	50 %
1TE33-8AA3	200	380	96 %	87 %	77 %	54 %	50 %
1TE35-0AA3	250	490	94 %	78 %	71 %	53 %	50 %

Derating factor of the output current as a function of the pulse frequency for units with a rated pulse frequency of 1.25 kHz

Motor Module in chassis format	Type rating at 400 V or 690 V	Output current at 1.25 kHz	**Derating factor** at pulse frequency					
6SL3720-...	kW	A	2 kHz	2.5 kHz	4 kHz	5 kHz	7.5 kHz	8 kHz
380 ... 480 V 3 AC								
1TE36-1AA3	315	605	83 %	72 %	64 %	60 %	40 %	36%
1TE37-5AA3	400	745	83 %	72 %	64 %	60 %	40 %	36%
1TE38-4AA3	450	840	87 %	79 %	64 %	55 %	40 %	37 %
1TE41-0AA3	560	985	92 %	87 %	70 %	60 %	50 %	47 %
1TE41-2AA3	710	1260	92 %	87 %	70 %	60 %	50 %	47 %
1TE41-4AA3	800	1405	97 %	95 %	74 %	60 %	50 %	47 %
500 ... 690 V 3 AC								
1TG28-5AA3	75	85	93 %	89 %	71 %	60 %	40 %	-
1TG31-0AA3	90	100	92 %	88 %	71 %	60 %	40 %	-
1TG31-2AA3	110	120	92 %	88 %	71 %	60 %	40 %	-
1TG31-5AA3	132	150	90 %	84 %	66 %	55 %	35 %	-
1TG31-8AA3	160	175	92 %	87 %	70 %	60 %	40 %	-
1TG32-2AA3	200	215	92 %	87 %	70 %	60 %	40 %	-
1TG32-6AA3	250	260	92 %	88 %	71 %	60 %	40 %	-
1TG33-3AA3	315	330	89 %	82 %	65 %	55 %	40 %	-
1TG34-1AA3	400	410	89 %	82 %	65 %	55 %	35 %	-
1TG34-7AA3	450	465	92 %	87 %	67 %	55 %	35 %	-
1TG35-8AA3	560	575	91 %	85 %	64 %	50 %	35 %	-
1TG37-4AA3	710	735	87 %	79 %	64 %	55 %	35 %	-
1TG38-1AA3	800	810	97 %	95 %	71 %	55 %	35 %	-
1TG38-8AA3	900	910	92 %	87 %	67 %	55 %	33 %	-
1TG41-0AA3	1000	1025	91 %	86 %	64 %	50 %	30 %	-
1TG41-3AA3	1200	1270	87 %	79 %	55 %	40 %	25 %	-

© Siemens 2024

Characteristic curves

Maximum output frequencies achieved by increasing the pulse frequency

The adjustable pulse frequencies – and therefore the output frequencies that can be achieved with the factory-set current controller clock cycles – are listed below.

Current controller clock cycle T_I	Adjustable pulse frequency f_p	Max. achievable output frequency f_A		
		V/f mode	Vector mode	Servo mode
250 µs [1]	2 kHz	166 Hz	166 Hz	333 Hz
	4 kHz	333 Hz	333 Hz	550 Hz [3]
	8 kHz	550 Hz [3]	480 Hz	550 Hz [3]
400 µs [2]	1.25 kHz	104 Hz	104 Hz	–
	2.5 kHz	208 Hz	208 Hz	–
	5.0 kHz	416 Hz	300 Hz	–
	7.5 kHz	550 Hz [3]	300 Hz	–

[1] As factory setting, the following Motor Modules in chassis format have a current controller clock cycle of 250 µs and a pulse frequency of 2 kHz:
- 510 ... 720 V DC: ≤ 250 kW / 490 A

[2] As factory setting, the following Motor Modules in chassis format have a current controller clock cycle of 400 µs and a pulse frequency of 1.25 kHz:
- 510 ... 720 V DC: ≥ 315 kW / 605 A
- 675 ... 1035 V DC: All power ratings

[3] With the "High output frequencies" license, which can be ordered as option J01 on the CompactFlash card for SINAMICS S120, the maximum output frequency is increased up to 650 Hz. For more information, see https://support.industry.siemens.com/cs/document/104020669

© Siemens 2024

Characteristic curves

Derating data for devices in booksize format

SINAMICS S120 Cabinet Modules with power units in booksize format and the associated system components are rated for an ambient temperature of 40 °C and installation altitudes up to 1000 m above sea level. If SINAMICS S120 Cabinet Modules with power units in booksize format are operated at ambient temperatures higher than 40 °C and/or installation altitudes higher than 1000 m above sea level, then the corresponding derating factors must be taken into account as a function of the ambient temperature and/or the installation altitude.
These derating factors are different from the derating factors for the chassis format power units and are listed in Catalog D 21.4.

Overload capability

SINAMICS S120 Cabinet Modules have an overload reserve, e.g. to handle breakaway torques. If larger surge loads occur, this must be taken into account in the configuration. For drives with overload requirements, the appropriate base load current must, therefore, be used as a basis for the required load.

Permissible overload assumes that the converter is operated at its base-load current before and after the overload occurs, based on a duty cycle duration of 300 s.

Another precondition is that the Motor Modules are operated at their factory-set pulse frequency at output frequencies >10 Hz.

For temporary, periodic duty cycles with high variations of load within the duty cycle, the relevant sections of the SINAMICS Low Voltage Engineering Manual must be observed.

Motor Modules in chassis format

Motor Modules with power units in chassis format can be configured on the basis of different base load currents.

The base-load current for a low overload I_L is the basis for a duty cycle of 110 % for 60 s or 150 % for 10 s.

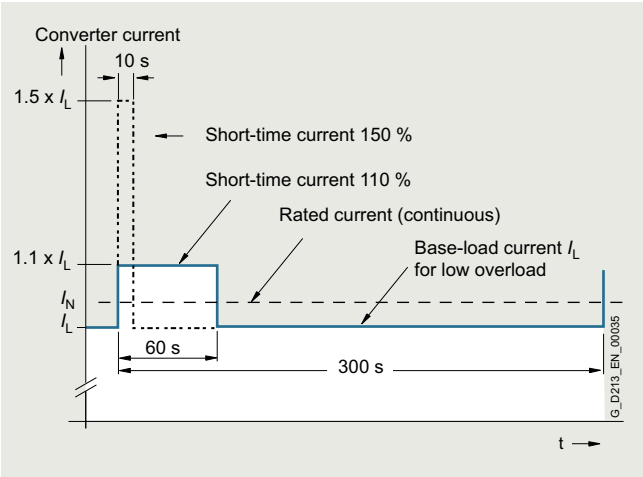

Low overload

The base-load current I_H for a high overload is based on a load cycle of 150 % for 60 s or 160 % for 10 s.

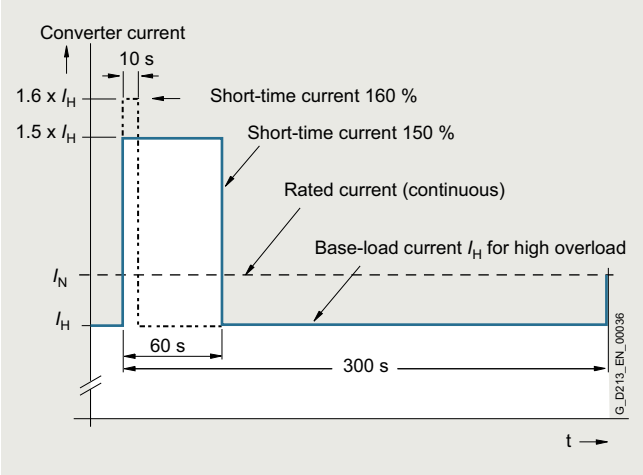

High overload

Motor Modules in booksize format

Motor Modules with power units in the booksize format have the following overload capabilities:

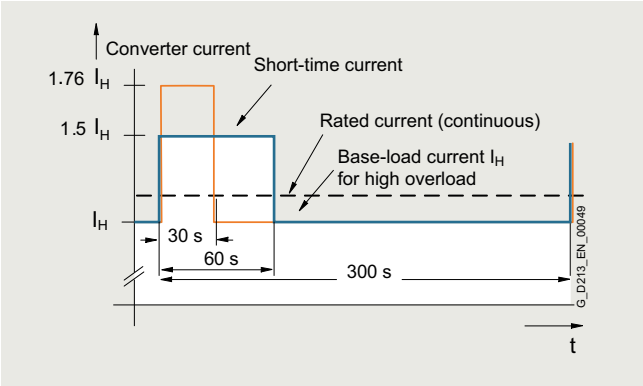

High overload

Line Modules in chassis format

The base-load current for a high overload $I_{H\,DC}$ is the basis for a duty cycle of 150 % for 60 s or $I_{max\,DC}$ for 5 s.

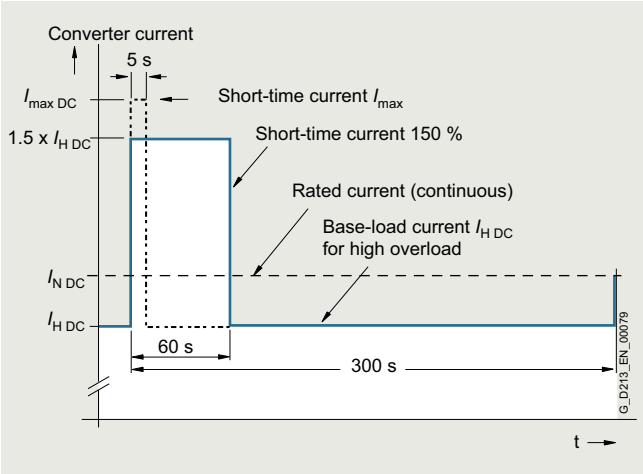

© Siemens 2024

Overview

Line Connection Modules (LCM) contain the line-side infeed with main circuit breaker and fuse switch disconnector or circuit breaker and provide the connection between the plant power system and the Line Modules.

Line Connection Modules are available for the following voltages and currents:

Line voltage	Rated infeed/regenerative feedback current
380 ... 480 V 3 AC	250 ... 3200 A
500 ... 690 V 3 AC	280 ... 3200 A

Design

Different versions exist depending on the input current:

- Units ≤ 800 A are equipped with a main circuit breaker with a fuse switch disconnector
- Units > 800 A are equipped with a fixed-mounted circuit breaker (draw-out circuit breaker is available as option)

When Line Connection Modules are ordered, the type of Line Module used must be specified:

- For Basic Line Modules: Option **L43**
- For Smart Line Modules: Option **L44**
- For Active Line Modules: Option **L42**

When using a Basic Line Module, a reactor is included in the scope of supply of the Line Connection Module, and when required, can be deselected (option **L22**).
For additional information, please refer to the SINAMICS Low Voltage Engineering Manual.

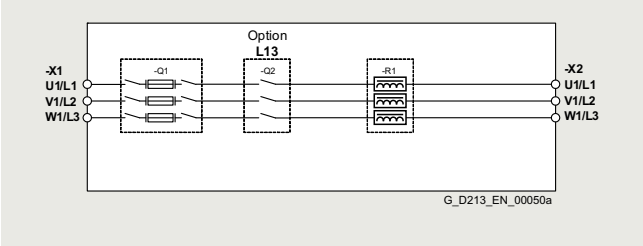

Connection example of a Line Connection Module for units ≤ 800 A to connect to Basic Line Modules, option **L43**, option main contactor, order code **L13**

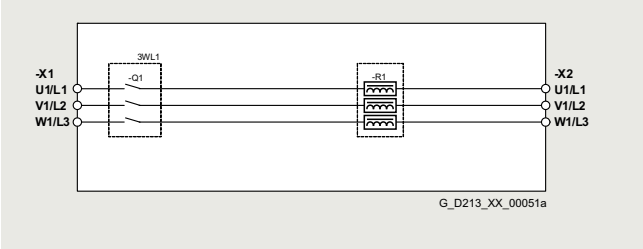

Connection example of a Line Connection Module for units > 800 A, < 2000 A to connect to Basic Line Modules, option **L43**

For input currents ≥ 2000 A, additional options are available:

- Grounding switch upstream of main circuit breaker: Option **L46**
- Current transformer upstream of main circuit breaker: Option **L41**
- Grounding switch downstream of main circuit breaker: Option **L47**

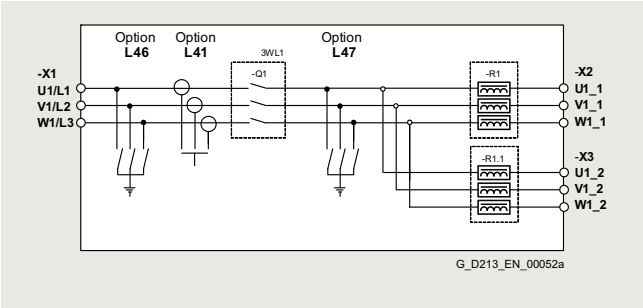

Connection example of a Line Connection Module ≥ 2000 A

© Siemens 2024

Design

When Basic Line Modules that are fed via a common Line Connection Module are connected in parallel, line reactors are generally required. These are installed in the Line Connection Module.

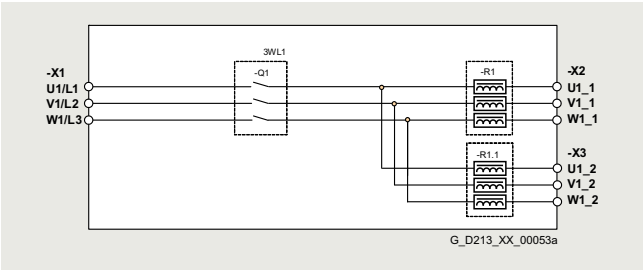

Connection example of a Line Connection Module ≥ 2000 A for connection to Basic Line Modules, option **L43**

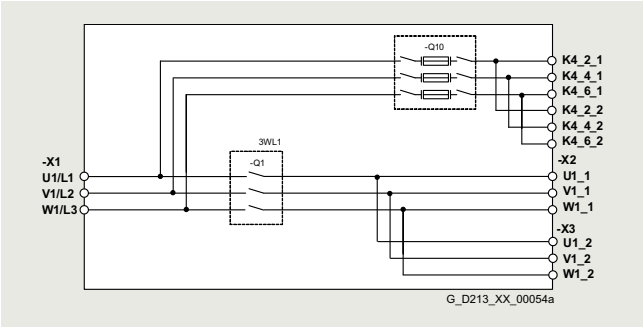

Connection example of a Line Connection Module ≥ 2000 A for connection to Active Line Modules in parallel connection, option **L42**

Selection and ordering data

Rated infeed/regenerative feedback current [1] A	**Line Connection Module** Article No.
Line voltage 380 ... 480 V 3 AC	
250	**6SL3700-0LE32-5AA3**
380	**6SL3700-0LE34-0AA3**
600	**6SL3700-0LE36-3AA3**
770	**6SL3700-0LE38-0AA3**
1000	**6SL3700-0LE41-0AA3**
1250	**6SL3700-0LE41-3AA3**
1600	**6SL3700-0LE41-6AA3**
2000	**6SL3700-0LE42-0AA3**
2000	**6SL3700-0LE42-0BA3**
2500	**6SL3700-0LE42-5BA3**
3200	**6SL3700-0LE43-2BA3**
Line voltage 500 ... 690 V 3 AC	
280	**6SL3700-0LG32-8AA3**
380	**6SL3700-0LG34-0AA3**
600	**6SL3700-0LG36-3AA3**
770	**6SL3700-0LG38-0AA3**
1000	**6SL3700-0LG41-0AA3**
1250	**6SL3700-0LG41-3AA3**
1600	**6SL3700-0LG41-6AA3**
2000	**6SL3700-0LG42-0BA3**
2500	**6SL3700-0LG42-5BA3**
3200	**6SL3700-0LG43-2BA3**

Note:
When ordering Line Connection Modules, the option order code must be appended to the article number to indicate whether the Line Connection Module is to be connected to a Basic Line Module (option **L43**), to a Smart Line Module (option **L44**) or to an Active Line Module (option **L42**).

This information is required to ensure that the Line Connection Module is correctly equipped at the factory. This particularly applies to the busbar connection at the 3-phase end (3 AC), to any pre-charging circuits required and to the specified line reactors for Basic Line Modules.

When Cabinet Modules are selected and combined, the specified equipping and preparation of the Line Connection Modules is performed at the factory in accordance with the assignment table in the Integration section. For all other combinations deviating from this, this is not the case. In such cases, the 3-AC busbar connections will have to be configured and installed on site.

[1] The current values stated are based on an ambient temperature (air intake temperature) of 40 °C (104 °F).

© Siemens 2024

Integration

Line Connection Module		Basic Line Module		Smart Line Module		Active Line Module	
Rated infeed/ regenera-tive feed-back current [1] A		Rated input current A		Rated infeed/ regenera-tive feed-back current A		Rated infeed/ regenera-tive feed-back current A	
Line voltage 380 ... 480 V 3 AC							
250	6SL3700-0LE32-5AA3	–	–	–	–	210	6SL3730-7TE32-1BA3
380	6SL3700-0LE34-0AA3	–	–	–	–	260	6SL3730-7TE32-6BA3
600	6SL3700-0LE36-3AA3	365	6SL3730-1TE34-2AA3	463	6SL3730-6TE35-5AA3	380	6SL3730-7TE33-8BA3
		460	6SL3730-1TE35-3AA3			490	6SL3730-7TE35-0BA3
770	6SL3700-0LE38-0AA3	710	6SL3730-1TE38-2AA3	614	6SL3730-6TE37-3AA3	605	6SL3730-7TE36-1BA3
1000	6SL3700-0LE41-0AA3	–	–	883	6SL3730-6TE41-1AA3	840	6SL3730-7TE38-4BA3
1250	6SL3700-0LE41-3AA3	1010	6SL3730-1TE41-2AA3	1093	6SL3730-6TE41-3AA3	985	6SL3730-7TE41-0BA3
1600	6SL3700-0LE41-6AA3	1265	6SL3730-1TE41-5AA3	1430	6SL3730-6TE41-7AA3	1405	6SL3730-7TE41-4BA3
2000	6SL3700-0LE42-0AA3	1630	6SL3730-1TE41-8AA3	–	–	–	–
2000	6SL3700-0LE42-0BA3	*2 × 935*	*6SL3730-1TE41-2BA3*	*2 × 817*	*6SL3730-6TE41-1BA3*	*2 × 936*	*6SL3730-7TE41-0BA3*
			6SL3730-1TE41-2BC3		*6SL3730-6TE41-1BC3*		*6SL3730-7TE41-0BC3*
2500	6SL3700-0LE42-5BA3	*2 × 1170*	*6SL3730-1TE41-5BA3*	*2 × 1011*	*6SL3730-6TE41-3BA3*	–	–
			6SL3730-1TE41-5BC3		*6SL3730-6TE41-3BC3*		
3200	6SL3700-0LE43-2BA3	*2 × 1508*	*6SL3730-1TE41-8BA3*	*2 × 1323*	*6SL3730-6TE41-7BA3*	*2 × 1335*	*6SL3730-7TE41-4BA3*
			6SL3730-1TE41-8BC3		*6SL3730-6TE41-7BC3*		*6SL3730-7TE41-4BC3*
Line voltage 500 ... 690 V 3 AC							
280	6SL3700-0LG32-8AA3	260	6SL3730-1TG33-0AA3	–	–	–	–
380	6SL3700-0LG34-0AA3	375	6SL3730-1TG34-3AA3	–	–	–	–
600	6SL3700-0LG36-3AA3	575	6SL3730-1TG36-8AA3	463	6SL3730-6TG35-5AA3	575	6SL3730-7TG35-8BA3
770	6SL3700-0LG38-0AA3	–	–	757	6SL3730-6TG38-8AA3	735	6SL3730-7TG37-4BA3
1000	6SL3700-0LG41-0AA3	925	6SL3730-1TG41-1AA3	–	–	–	–
1250	6SL3700-0LG41-3AA3	1180	6SL3730-1TG41-4AA3	1009	6SL3730-6TG41-2AA3	1025	6SL3730-7TG41-0BA3
1600	6SL3700-0LG41-6AA3	1580	6SL3730-1TG41-8AA3	1430	6SL3730-6TG41-7AA3	1270	6SL3730-7TG41-3BA3
2000	6SL3700-0LG42-0BA3	*2 × 855*	*6SL3730-1TG41-1BA3*	*2 × 700*	*6SL3730-6TG38-8BA3*	*2 × 698*	*6SL3730-7TG37-4BA3*
			6SL3730-1TG41-1BC3		*6SL3730-6TG38-8BC3*		*6SL3730-7TG37-4BC3*
		–	–	*2 × 934*	*6SL3730-6TG41-2BA3*	*2 × 974*	*6SL3730-7TG41-0BA3*
					6SL3730-6TG41-2BC3		*6SL3730-7TG41-0BC3*
2500	6SL3700-0LG42-5BA3	*2 × 1092*	*6SL3730-1TG41-4BA3*	–	–	*2 × 1206*	*6SL3730-7TG41-3BA3*
			6SL3730-1TG41-4BC3				*6SL3730-7TG41-3BC3*
3200	6SL3700-0LG43-2BA3	*2 × 1462*	*6SL3730-1TG41-8BA3*	*2 × 1323*	*6SL3730-6TG41-7BA3*	–	–
			6SL3730-1TG41-8BC3		*6SL3730-6TG41-7BC3*		

Entries in italics:
Parallel circuit of two Line Modules connected to a Line Connection Module.
The required derating factors listed below are already included in the current values given above:
- *7.5 % for Basic Line Modules*
- *7.5 % for Smart Line Modules*
- *5 % for Active Line Modules*

[1] The current values stated are based on an ambient temperature (air intake temperature) of 40 °C (104 °F).

© Siemens 2024

Technical specifications

Line voltage 380 ... 480 V 3 AC		Line Connection Modules					
		6SL3700-0LE32-5AA3	6SL3700-0LE34-0AA3	6SL3700-0LE36-3AA3	6SL3700-0LE38-0AA3	6SL3700-0LE41-0AA3	6SL3700-0LE41-3AA3
Infeed/regenerative feedback current							
• Rated current $I_{N\,I}$	A	**250**	**380**	**600**	**770**	**1000**	**1250**
Current demand							
• Fan power supply 230 V AC	A	–	–	–	–	1.07	1.07
• 230 V AC [1]							
- Inrush current	A	3.6	3.6	3.6	10.8	0.5	0.5
- Holding current	A	0.04	0.04	0.04	0.12	0.06	0.06
Power loss, max. [2]							
• At 50 Hz 400 V							
- Option **L42/L44**	kW	0.115	0.19	0.31	0.39	0.18	0.29
- Option **L43**	kW	–	–	0.675	0.74	–	0.787
• At 60 Hz 460 V							
- Option **L42/L44**	kW	0.115	0.19	0.31	0.39	0.18	0.29
- Option **L43**	kW	–	–	0.675	0.74	–	0.787
Cooling air requirement [3]	m^3/s (ft^3/s)	–	–	–	–	0.36 (12.7)	0.36 (12.7)
Sound pressure level L_{pA} (1 m) at 50/60 Hz	dB	–	–	–	–	68/70	68/70
Line supply connection L1, L2, L3		2 x M12	2 x M12	2 x M12	4 x M12	10 x M12	10 x M12
• Conductor cross-section, max. (IEC)	mm^2	2 × 150	2 × 150	4 × 240	8 × 240	8 × 240	8 × 240
PE/GND connection		PE bar	PE bar	PE bar	PE bar	PE bar	PE bar
• Busbar cross-section	mm^2	600	600	600	600	600	600
• Conductor cross-section, max. (IEC)	mm^2	240	240	240	240	240	240
Degree of protection		IP20	IP20	IP20	IP20	IP20	IP20
Dimensions							
• Width	mm (in)	400 (15.7)	400 (15.7)	600 (23.6)	600 (23.6)	600 (23.6)	600 (23.6)
• Height [4]	mm (in)	2200 (86.6)	2200 (86.6)	2200 (86.6)	2200 (86.6)	2200 (86.6)	2200 (86.6)
• Depth	mm (in)	600 (23.6)	600 (23.6)	600 (23.6)	600 (23.6)	600 (23.6)	600 (23.6)
Weight, approx.							
• Option **L42/L44**	kg (lb)	210 (463)	230 (507)	310 (683)	340 (750)	450 (992)	470 (1036)
• Option **L43**	kg (lb)	–	–	360 (794)	420 (926)	–	570 (1257)
Frame size		FL	FL	GL	HL	JL	JL
Rated short-circuit current according to IEC	kA	50	50	50	50	50	50
Minimum short-circuit current [5]	kA	3	3	8	12	2	2.5

[1] Current demand of contactors/circuit breakers and fans with degree of protection IP23, IP43, IP54 (in combination with Basic Line Modules).

[2] The specified power loss represents the maximum value at 100 % utilization. The value is lower under normal operating conditions.

[3] For IP23, IP43 or IP54 degree of protection only (in combination with Basic Line Modules).

[4] The cabinet height increases by 250 mm (9.84 in) with degree of protection IP21, and by 400 mm (15.7 in) with degrees of protection IP23, IP43 and IP54.

[5] Current required to ensure reliable tripping of installed protective devices.

© Siemens 2024

Technical specifications

Line voltage 380 ... 480 V 3 AC		Line Connection Modules				
		6SL3700-0LE41-6AA3	6SL3700-0LE42-0AA3	6SL3700-0LE42-0BA3	6SL3700-0LE42-5BA3	6SL3700-0LE43-2BA3
				Prepared for connection to Line Modules connected in parallel		
Infeed/regenerative feedback current						
• Rated current $I_{N\,I}$	A	**1600**	**2000**	***2000***	***2500***	***3200***
Current demand						
• Fan power supply 230 V AC	A	1.07	2.14	*2.14*	*2.14*	*2.14*
• 230 V AC [1]						
- Inrush current	A	0.5	0.5	*0.5*	*0.5*	*0.5*
- Holding current	A	0.06	0.06	*0.06*	*0.06*	*0.04*
Power loss, max. [2]						
• At 50 Hz 400 V						
- Option **L42/L44**	kW	0.41	0.6	*0.6*	*0.95*	*0.95*
- Option **L43**	kW	1.186	1.366	*1.594*	*2.502*	*2.482*
• At 60 Hz 460 V						
- Option **L42/L44**	kW	0.41	0.6	*0.6*	*0.95*	*0.95*
- Option **L43**	kW	1.186	1.366	*1.594*	*2.502*	*2.482*
Cooling air requirement [3]	m^3/s (ft^3/s)	0.36 (12.7)	0.72 (25.4)	*0.72 (25.4)*	*0.72 (25.4)*	*0.72 (25.4)*
Sound pressure level L_{pA} (1 m) at 50/60 Hz	dB	68/70	70/72	*70/72*	*70/72*	*70/72*
Line supply connection L1, L2, L3		10 x M12	10 x M12 + 4 x M16	*10 x M12 + 4 x M16*	*10 x M12 + 4 x M16*	*10 x M12 + 4 x M16*
• Conductor cross-section, max. (IEC)	mm^2	8 × 240	10 × 240	*10 × 240*	*10 × 240*	*10 × 300*
PE/GND connection		PE bar	PE bar	*PE bar*	*PE bar*	*PE bar*
• Busbar cross-section	mm^2	600	600	*600*	*600*	*600*
• Conductor cross-section, max. (IEC)	mm^2	240	240	*240*	*240*	*240*
Degree of protection		IP20	IP20	*IP20*	*IP20*	*IP20*
Dimensions						
• Width	mm (in)	600 (23.6)	1000 (39.4)	*1000 (39.4)*	*1000 (39.4)*	*1000 (39.4)*
• Height [4]	mm (in)	2200 (86.6)	2200 (86.6)	*2200 (86.6)*	*2200 (86.6)*	*2200 (86.6)*
• Depth	mm (in)	600 (23.6)	600 (23.6)	*600 (23.6)*	*600 (23.6)*	*600 (23.6)*
Weight, approx.						
• Option **L42/L44**	kg (lb)	490 (1080)	600 (1323)	*620 (1367)*	*620 (1367)*	*720 (1587)*
• Option **L43**	Kg (lb)	650 (1433)	760 (1676)	*820 (1808)*	*900 (1984)*	*1000 (2205)*
Frame size		JL	KL	*KL*	*KL*	*LL*
Rated short-circuit current according to IEC	kA	100	100	*100*	*100*	*100*
Minimum short-circuit current [5]	kA	3.2	4	*4*	*5*	*6.4*

[1] Current demand of contactors/circuit breakers and fans with degree of protection IP23, IP43, IP54 (in combination with Basic Line Modules).

[2] The specified power loss represents the maximum value at 100 % utilization. The value is lower under normal operating conditions.

[3] For IP23, IP43 or IP54 degree of protection only (in combination with Basic Line Modules).

[4] The cabinet height increases by 250 mm (9.84 in) with degree of protection IP21, and by 400 mm (15.7 in) with degrees of protection IP23, IP43 and IP54.

[5] Current required to ensure reliable tripping of installed protective devices.

© Siemens 2024

Technical specifications

Line voltage 500 ... 690 V 3 AC		Line Connection Modules				
		6SL3700-0LG32-8AA3	6SL3700-0LG34-0AA3	6SL3700-0LG36-3AA3	6SL3700-0LG38-0AA3	6SL3700-0LG41-0AA3
Infeed/regenerative feedback current						
• Rated current $I_{N\,I}$	A	**280**	**380**	**600**	**770**	**1000**
Current demand						
• Fan power supply 230 V AC	A	–	–	–	–	1.07
• 230 V AC [1]						
- Inrush current	A	3.6	3.6	3.6	10.8	0.5
- Holding current	A	0.04	0.04	0.04	0.12	0.06
Power loss, max. [2]						
• At 50 Hz 500/690 V						
- Option **L42/L44**	kW	0.125	0.19	0.31	0.39	0.18
- Option **L43**	kW	0.402	0.668	0.794	–	0.963
• At 60 Hz 575 V						
- Option **L42/L44**	kW	0.125	0.19	0.31	0.39	0.18
- Option **L43**	kW	0.402	0.668	0.794	–	0.963
Cooling air requirement [3]	m^3/s (ft^3/s)	–	–	–	–	0.36 (12.7)
Sound pressure level L_{pA} (1 m) at 50/60 Hz	dB	–	–	–	–	68/70
Line supply connection L1, L2, L3		2 x M12	2 x M12	2 x M12	2 x M12	10 x M12
• Conductor cross-section, max. (IEC)	mm^2	2 × 150	2 × 150	4 × 240	8 × 240	8 × 240
PE/GND connection		PE bar	PE bar	PE bar	PE bar	PE bar
• Busbar cross-section	mm^2	600	600	600	600	600
• Conductor cross-section, max. (IEC)	mm^2	240	240	240	240	240
Degree of protection		IP20	IP20	IP20	IP20	IP20
Dimensions						
• Width	mm (in)	400 (15.7)	600 (23.6)	600 (23.6)	600 (23.6)	600 (23.6)
• Height [4]	mm (in)	2200 (86.6)	2200 (86.6)	2200 (86.6)	2200 (86.6)	2200 (86.6)
• Depth	mm (in)	600 (23.6)	600 (23.6)	600 (23.6)	600 (23.6)	600 (23.6)
Weight, approx.						
• Option **L42/L44**	kg (lb)	220 (485)	230 (507)	310 (683)	340 (750)	450 (992)
• Option **L43**	kg (lb)	260 (573)	310 (683)	400 (882)	–	650 (1433)
Frame size		FL	FL	GL	HL	JL
Rated short-circuit current according to IEC	kA	50	50	50	50	85
Minimum short-circuit current [5]	kA	3.2	3.5	9	15	2

[1] Current demand of contactors/circuit breakers and fans with degree of protection IP23, IP43, IP54 (in combination with Basic Line Modules).

[2] The specified power loss represents the maximum value at 100 % utilization. The value is lower under normal operating conditions.

[3] For IP23, IP43 or IP54 degree of protection only (in combination with Basic Line Modules).

[4] The cabinet height increases by 250 mm (9.84 in) with degree of protection IP21, and by 400 mm (15.7 in) with degrees of protection IP23, IP43 and IP54.

[5] Current required to ensure reliable tripping of installed protective devices.

© Siemens 2024

Technical specifications

Line voltage 500 ... 690 V 3 AC		Line Connection Modules				
		6SL3700-0LG41-3AA3	6SL3700-0LG41-6AA3	6SL3700-0LG42-0BA3	6SL3700-0LG42-5BA3	6SL3700-0LG43-2BA3
				Prepared for connection to Line Modules connected in parallel		
Infeed/regenerative feedback current						
• Rated current $I_{N\,I}$	A	**1250**	**1600**	***2000***	***2500***	***3200***
Current demand						
• Fan power supply 230 V AC	A	1.07	1.07	*2.14*	*2.14*	*2.14*
• 230 V AC [1]						
- Inrush current	A	0.5	0.5	*0.5*	*0.5*	*0.5*
- Holding current	A	0.06	0.06	*0.06*	*0.06*	*0.06*
Power loss, max. [2]						
• At 50 Hz 500/690 V						
- Option **L42/L44**	kW	0.29	0.41	*0.6*	*0.6*	*0.95*
- Option **L43**	kW	1.073	1.387	*2.166*	*2.166*	*2.894*
• At 60 Hz 575 V						
- Option **L42/L44**	kW	0.29	0.41	*0.6*	*0.6*	*0.95*
- Option **L43**	kW	1.073	1.387	*2.166*	*2.166*	*2.894*
Cooling air requirement [3]	m^3/s (ft^3/s)	0.36 (12.7)	0.36 (12.7)	*0.72 (25.4)*	*0.72 (25.4)*	*0.72 (25.4)*
Sound pressure level L_{pA} (1 m) at 50/60 Hz	dB	68/70	68/70	*70/72*	*70/72*	*70/72*
Line supply connection L1, L2, L3		10 x M12	10 x M12	*10 x M12 + 4 x M16*	*10 x M12 + 4 x M16*	*10 x M12 + 4 x M16*
• Conductor cross-section, max. (IEC)	mm^2	8 × 240	8 × 240	*10 × 240*	*10 × 240*	*10 × 300*
PE/GND connection		PE bar	PE bar	*PE bar*	*PE bar*	*PE bar*
• Busbar cross-section	mm^2	600	600	*600*	*600*	*600*
• Conductor cross-section, max. (IEC)	mm^2	240	240	*240*	*240*	*240*
Degree of protection		IP20	IP20	*IP20*	*IP20*	*IP20*
Dimensions						
• Width	mm (in)	600 (23.6)	600 (23.6)	*1000 (39.4)*	*1000 (39.4)*	*1000 (39.4)*
• Height [4]	mm (in)	2200 (86.6)	2200 (86.6)	*2200 (86.6)*	*2200 (86.6)*	*2200 (86.6)*
• Depth	mm (in)	600 (23.6)	600 (23.6)	*600 (23.6)*	*600 (23.6)*	*600 (23.6)*
Weight, approx.						
• Option **L42/L44**	kg (lb)	470 (1036)	490 (1080)	*600 (1323)*	*620 (1367)*	*720 (1587)*
• Option **L43**	kg (lb)	670 (1477)	680 (1499)	*980 (2161)*	*1000 (2205)*	*1080 (2381)*
Frame size		JL	JL	*KL*	*KL*	*LL*
Rated short-circuit current according to IEC	kA	85	85	*85*	*85*	*85*
Minimum short-circuit current [5]	kA	2.5	3.2	*4*	*5*	*6.4*

[1] Current demand of contactors/circuit breakers and fans with degree of protection IP23, IP43, IP54 (in combination with Basic Line Modules).

[2] The specified power loss represents the maximum value at 100 % utilization. The value is lower under normal operating conditions.

[3] For IP23, IP43 or IP54 degree of protection only (in combination with Basic Line Modules).

[4] The cabinet height increases by 250 mm (9.84 in) with degree of protection IP21, and by 400 mm (15.7 in) with degrees of protection IP23, IP43 and IP54.

[5] Current required to ensure reliable tripping of installed protective devices.

© Siemens 2024

Overview

Basic Line Modules (BLM) are compact line infeeds for two-quadrant operation, i.e. no regenerative feedback.

They are used when energy need not be fed back into the network.

If regenerative conditions occur in the drive line-up, Braking Modules must be used because they convert the excess energy into heat in braking resistors.

Basic Line Modules are suitable for connection to grounded TN/TT and non-grounded IT systems. The following voltages and power ratings are available:

Line voltage	Rated power
380 ... 480 V 3 AC	200 ... 900 kW
500 ... 690 V 3 AC	250 ... 1500 kW

The power ratings can be increased by connecting up to four identical Basic Line Modules in parallel.

For an infeed with the Basic Line Modules, depending on the line short-circuit power, a line reactor should be provided at the connection point. This reactor is available as standard in the Line Connection Module. However, it can be omitted if it is not required (option **L22**).
Further information can be found in the SINAMICS Low Voltage Engineering Manual.

Design

The Basic Line Modules are available in different frame sizes.

With frame sizes FB and GB, a fully controlled thyristor bridge is used to pre-charge the Basic Line Modules and connected Motor Modules. The thyristors normally operate with a trigger delay angle of 0°.

Basic Line Modules, frame size GD for 900 kW (400 V) or 1500 kW (690 V) include a diode bridge, and the DC link is pre-charged via a separate line-side pre-charging device that is located in the Line Connection Module (option **L43**, Line Connection Module for Basic Line Module).

Parallel connection of Basic Line Modules to increase power rating

Line Modules can be connected in parallel (relative to the line supply) in two ways for the purpose of creating drive line-ups with a higher power rating.

Two Basic Line Modules supplied with power via two separate Line Connection Modules

With this arrangement, each Basic Line Module is supplied via a Line Connection Module and the Basic Line Modules are protected by fuses or circuit breakers (at *I* > 800 A) in the Line Connection Module. A Basic Line Module is assigned to a Line Connection Module and is mechanically coupled. It is not necessary to mechanically directly couple both "groups" comprising Line Connection Module and Basic Line Module. Other modules can also be inserted in between.

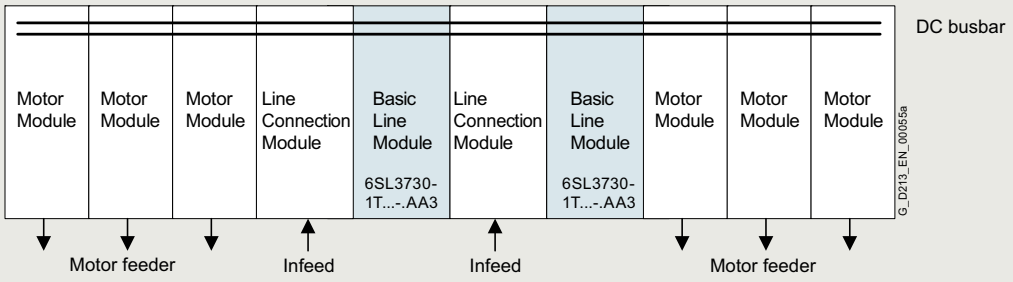

© Siemens 2024

Design

Two Basic Line Modules supplied with power via a single Line Connection Module

Basic Line Modules are available that can be operated on a single Line Connection Module. These can be connected to the left and right of the Line Connection Module. The power connections on the Basic Line Module on the left of the Line Connection Module are a mirror image (article no. with "**C**" in the next to last position, example: 6SL3730-1T.41-.B**C**3), which results in a very compact design for the line infeed.

For additional information, please refer to the SINAMICS Low Voltage Engineering Manual.

These module versions feature integrated line-side fuses which are required because the circuit breaker in the Line Connection Module is not capable of providing selective protection for the Basic Line Modules. They are therefore 200 mm wider in each case than version 6SL3730-1T...-.AA3.

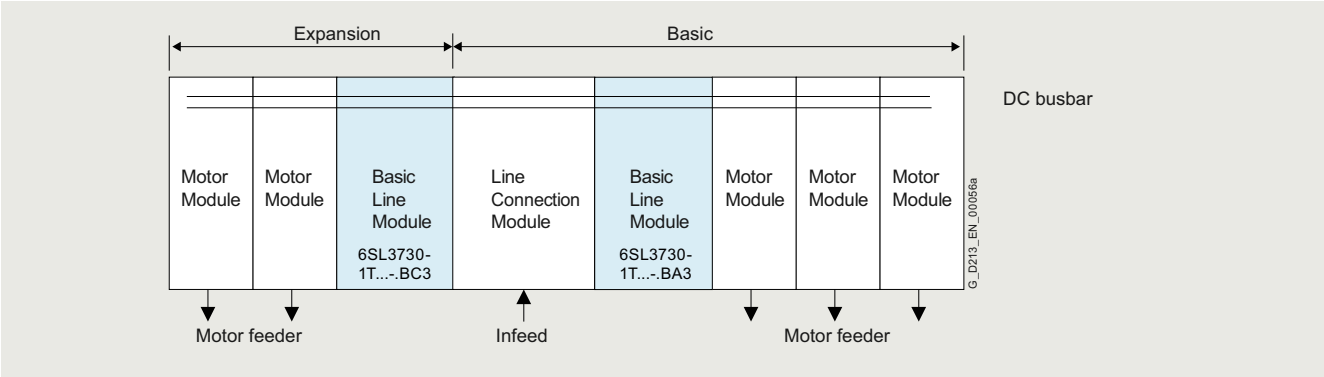

Note:

If the Basic Line Modules are supplied with power via the same circuit breaker, line-side fuses are provided to ensure selective individual protection of the modules. This arrangement increases the cabinet width by 200 mm (dimension data in selection tables includes extra width).

Please note that only Basic Line Modules with exactly the same output rating may be connected in parallel. The potential for imbalances in current distribution means that current derating of 7.5 % applies and this must be taken into account when the modules are dimensioned.

A connection of the Basic Line Modules connected in parallel using DRIVE-CLiQ must be taken into consideration.

For additional information, please refer to the SINAMICS Low Voltage Engineering Manual.

Selection and ordering data

Rated power at 400 V	Rated DC link current	*Note for a parallel connection*	**Basic Line Module**
kW	A	*Mounting onto a Line Connection Module*	Article No.
Line voltage 380 ... 480 V 3 AC (DC link voltage 510 ... 650 V DC)			
200	420	–	**6SL3730-1TE34-2AA3**
250	530	–	**6SL3730-1TE35-3AA3**
400	820	–	**6SL3730-1TE38-2AA3**
560	1200	–	**6SL3730-1TE41-2AA3**
		Right	**6SL3730-1TE41-2BA3**
		Left	**6SL3730-1TE41-2BC3**
710	1500	–	**6SL3730-1TE41-5AA3**
		Right	**6SL3730-1TE41-5BA3**
		Left	**6SL3730-1TE41-5BC3**
900	1880	–	**6SL3730-1TE41-8AA3**
		Right	**6SL3730-1TE41-8BA3**
		Left	**6SL3730-1TE41-8BC3**

Rated power at 690 V	Rated DC link current	*Note for a parallel connection*	**Basic Line Module**
kW	A	*Mounting onto a Line Connection Module*	Article No.
Line voltage 500 ... 690 V 3 AC (DC link voltage 675 ... 930 V DC)			
250	300	–	**6SL3730-1TG33-0AA3**
355	430	–	**6SL3730-1TG34-3AA3**
560	680	–	**6SL3730-1TG36-8AA3**
900	1100	–	**6SL3730-1TG41-1AA3**
		Right	**6SL3730-1TG41-1BA3**
		Left	**6SL3730-1TG41-1BC3**
1100	1400	–	**6SL3730-1TG41-4AA3**
		Right	**6SL3730-1TG41-4BA3**
		Left	**6SL3730-1TG41-4BC3**
1500	1880	–	**6SL3730-1TG41-8AA3**
		Right	**6SL3730-1TG41-8BA3**
		Left	**6SL3730-1TG41-8BC3**

© Siemens 2024

Integration

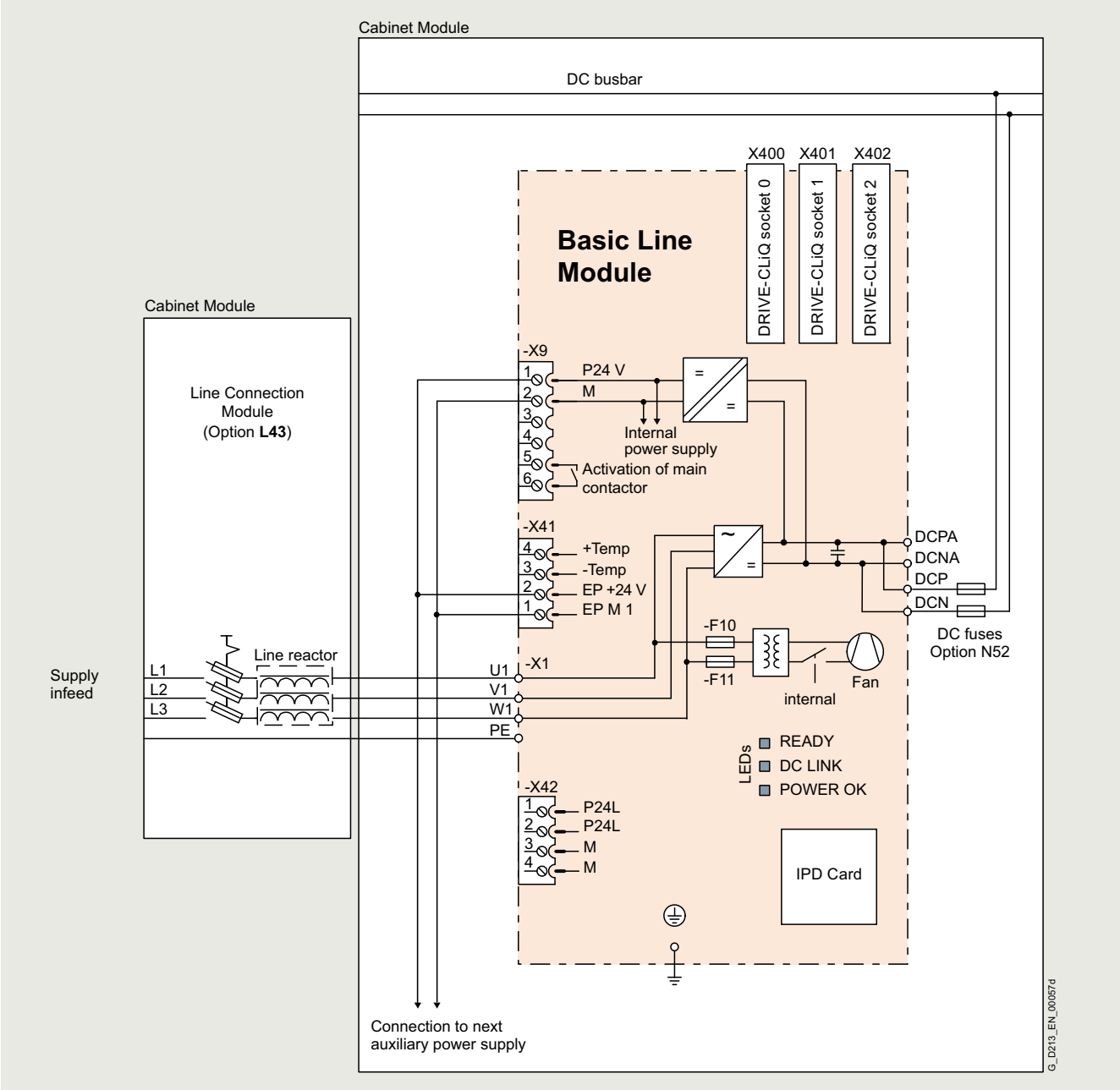

Connection example of a Basic Line Module (frame size FB and GB)

© Siemens 2024

Integration

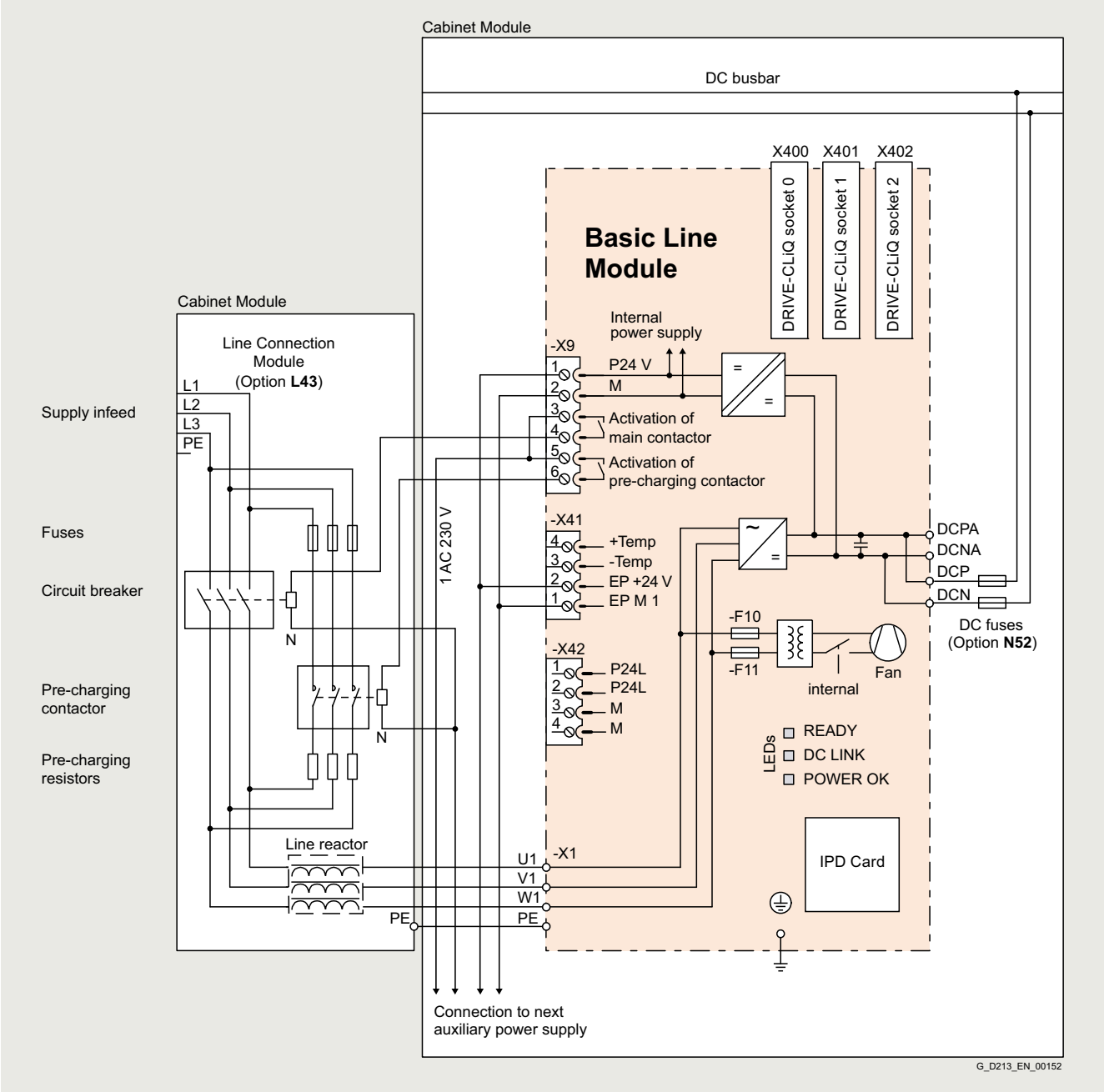

Connection example: Basic Line Module (Frame size GD)

© Siemens 2024

Technical specifications

Line voltage 380 ... 480 V 3 AC		Basic Line Modules					
		6SL3730-1TE34-2AA3	6SL3730-1TE35-3AA3	6SL3730-1TE38-2AA3	6SL3730-1TE41-2AA3	6SL3730-1TE41-5AA3	6SL3730-1TE41-8AA3
For a parallel circuit configuration, mounted to the right of the Line Connection Module					*6SL3730-1TE41-2BA3*	*6SL3730-1TE41-5BA3*	*6SL3730-1TE41-8BA3*
For a parallel circuit configuration, mounted to the left of the Line Connection Module					*6SL3730-1TE41-2BC3*	*6SL3730-1TE41-5BC3*	*6SL3730-1TE41-8BC3*
Rated power							
• At $I_{N\,DC}$ (50 Hz 400 V)	kW	**200**	**250**	**400**	**560**	**710**	**900**
• At $I_{H\,DC}$ (50 Hz 400 V)	kW	160	200	315	450	560	705
• At $I_{N\,DC}$ (60 Hz 460 V)	hp	305	385	615	860	1090	1390
• At $I_{H\,DC}$ (60 Hz 460 V)	hp	245	305	485	690	860	1090
DC link current							
• Rated current $I_{N\,DC}$	A	420	530	820	1200	1500	1880
• Base-load current $I_{H\,DC}$ [1]	A	328	413	640	936	1170	1467
• Maximum current $I_{max\,DC}$	A	630	795	1230	1800	2250	2820
Input current							
• Rated current $I_{N\,I}$	A	365	460	710	1010	1265	1630
• Maximum current $I_{max\,I}$	A	547	690	1065	1515	1897	2380
Current demand							
• 24 V DC auxiliary power supply	A	1.1	1.1	1.1	1.1	1.1	1.1
• 400 V AC [2]	A	Internal	Internal	Internal	Internal	Internal	Internal
DC link capacitance							
• Basic Line Module	µF	7200	9600	14600	23200	29000	34800
• Drive line-up, max.	µF	57600	76800	116800	185600	232000	139200
Power loss, max. [3]							
• At 50 Hz 400 V	kW	1.9	2.1	3.2	4.6	5.5	6.9
• At 60 Hz 460 V	kW	1.9	2.1	3.2	4.6	5.5	6.9
Cooling air requirement	m^3/s (ft^3/s)	0.17 (6.00)	0.17 (6.00)	0.17 (6.00)	0.36 (12.7)	0.36 (12.7)	0.36 (12.7)
Sound pressure level L_{pA} (1 m) at 50/60 Hz	dB	66/68	66/68	66/68	71/73	71/73	71/73
PE/GND connection		PE bar	PE bar	PE bar	PE bar	PE bar	PE bar
• Busbar cross-section	mm^2	600	600	600	600	600	600
• Conductor cross-section, max. (IEC)	mm^2	240	240	240	240	240	240
Cable length, max. [4]							
• Shielded	m (ft)	2600 (8530)	2600 (8530)	2600 (8530)	4000 (13123)	4000 (13123)	4800 (15748)
• Unshielded	m (ft)	3900 (12795)	3900 (12795)	3900 (12795)	6000 (19685)	6000 (19685)	7200 (23622)
Degree of protection		IP20	IP20	IP20	IP20	IP20	IP20
Dimensions							
• Width	mm (in)	400 (15.7)	400 (15.7)	400 (15.7)	400/*600/600* (15.7/*23.6/23.6*)	400/*600/600* (15.7/*23.6/23.6*)	400/*600/600* (15.7/*23.6/23.6*)
• Height [5]	mm (in)	2200 (86.6)	2200 (86.6)	2200 (86.6)	2200 (86.6)	2200 (86.6)	2200 (86.6)
• Depth	mm (in)	600 (23.6)	600 (23.6)	600 (23.6)	600 (23.6)	600 (23.6)	600 (23.6)
Weight, approx.	kg (lb)	166 (366)	166 (366)	166 (366)	320/*440/480* (705/*970/1058*)	320/*440/480* (705/*970/1058*)	320/*440/480* (705/*970/1058*)
Frame size		FB	FB	FB	GB	GB	GD
Rated short-circuit current according to IEC	kA	65	65	65	84	100	100
Minimum short-circuit current [6]	kA	4.4	5.2	10	2.5	3.2	4
• For connection in parallel	kA	–	–	–	*4*	*5*	*6.4*

[1] The base-load current $I_{H\,DC}$ is the basis for a duty cycle of 150 % for 60 s or $I_{max\,DC}$ for 5 s with a duty cycle duration of 300 s.

[2] The current demand for the 400 V AC auxiliary power supply is drawn from the line input voltage.

[3] The specified power loss represents the maximum value at 100 % utilization. The value is lower under normal operating conditions.

[4] Total of all motor cables and DC link. Longer cable lengths for specific configurations are available on request.

[5] The cabinet height increases by 250 mm (9.84 in) with degree of protection IP21, and by 400 mm (15.7 in) with degrees of protection IP23, IP43 or IP54.

[6] Current required to ensure reliable tripping of installed protective devices.

© Siemens 2024

Technical specifications

Line voltage 500 ... 690 V 3 AC		Basic Line Modules					
		6SL3730-1TG33-0AA3	6SL3730-1TG34-3AA3	6SL3730-1TG36-8AA3	6SL3730-1TG41-1AA3	6SL3730-1TG41-4AA3	6SL3730-1TG41-8AA3
For a parallel circuit configuration, mounted to the right of the Line Connection Module					*6SL3730-1TG41-1BA3*	*6SL3730-1TG41-4BA3*	*6SL3730-1TG41-8BA3*
For a parallel circuit configuration, mounted to the left of the Line Connection Module					*6SL3730-1TG41-1BC3*	*6SL3730-1TG41-4BC3*	*6SL3730-1TG41-8BC3*
Rated power							
• At $I_{N\,DC}$ (50 Hz 690 V)	kW	**250**	**355**	**560**	**900**	**1100**	**1500**
• At $I_{H\,DC}$ (50 Hz 690 V)	kW	195	280	440	710	910	1220
• At $I_{N\,DC}$ (50 Hz 500 V)	kW	175	250	390	635	810	1085
• At $I_{H\,DC}$ (50 Hz 500 V)	kW	165	235	365	595	755	1015
• At $I_{N\,DC}$ (60 Hz 575 V)	hp	250	350	600	900	1250	1500
• At $I_{H\,DC}$ (60 Hz 575 V)	hp	200	300	450	800	1000	1250
DC link current							
• Rated current $I_{N\,DC}$	A	300	430	680	1100	1400	1880
• Base-load current $I_{H\,DC}$ [1]	A	234	335	530	858	1092	1467
• Maximum current $I_{max\,DC}$	A	450	645	1020	1650	2100	2820
Input current							
• Rated current $I_{N\,I}$	A	260	375	575	925	1180	1580
• Maximum current $I_{max\,I}$	A	390	563	863	1388	1770	2370
Current demand							
• 24 V DC auxiliary power supply	A	1.1	1.1	1.1	1.1	1.1	1.1
• 500 V/690 V AC [2]	A	Internal	Internal	Internal	Internal	Internal	Internal
DC link capacitance							
• Basic Line Module	µF	3200	4800	7300	11600	15470	19500
• Drive line-up, max.	µF	25600	38400	58400	92800	123760	78000
Power loss, max. [3]							
• At 50 Hz 690 V	kW	1.5	2.1	3	5.4	5.8	7.3
• At 60 Hz 575 V	kW	1.5	2.1	3	5.4	5.8	7.3
Cooling air requirement	m^3/s (ft^3/s)	0.17 (6.00)	0.17 (6.00)	0.17 (6.00)	0.36 (12.7)	0.36 (12.7)	0.36 (12.7)
Sound pressure level L_{pA} (1 m) at 50/60 Hz	dB	66/68	66/68	66/68	71/73	71/73	71/73
PE/GND connection		PE bar	PE bar	PE bar	PE bar	PE bar	PE bar
• Busbar cross-section	mm^2	600	600	600	600	600	600
• Conductor cross-section, max. (IEC)	mm^2	240	240	240	240	240	240
Cable length, max. [4]							
• Shielded	m (ft)	1500 (4921)	1500 (4921)	1500 (4921)	2250 (7382)	2250 (7382)	2750 (9022)
• Unshielded	m (ft)	2250 (7382)	2250 (7382)	2250 (7382)	3375 (11073)	3375 (11073)	4125 (13533)
Degree of protection		IP20	IP20	IP20	IP20	IP20	IP20
Dimensions							
• Width	mm (in)	400 (15.7)	400 (15.7)	400 (15.7)	400/*600*/*600* (15.7/*23.6*/*23.6*)	400/*600*/*600* (15.7/*23.6*/*23.6*)	400/*600*/*600* (15.7/*23.6*/*23.6*)
• Height [5]	mm (in)	2200 (86.6)	2200 (86.6)	2200 (86.6)	2200 (86.6)	2200 (86.6)	2200 (86.6)
• Depth	mm (in)	600 (23.6)	600 (23.6)	600 (23.6)	600 (23.6)	600 (23.6)	600 (23.6)
Weight, approx.	kg (lb)	166 (366)	166 (366)	166 (366)	320/*440*/*480* (705/*970*/*1058*)	320/*440*/*480* (705/*970*/*1058*)	320/*440*/*480* (705/*970*/*1058*)
Frame size		FB	FB	FB	GB	GB	GD
Rated short-circuit current according to IEC	kA	65	65	65	84	100	100
Minimum short-circuit current [6]	kA	3	4.4	8	2	2.5	3.2
• For connection in parallel	kA	–	–	–	*4*	*5*	*6.4*

[1] The base-load current $I_{H\,DC}$ is the basis for a duty cycle of 150 % for 60 s or $I_{max\,DC}$ for 5 s with a duty cycle duration of 300 s.

[2] The current demand for the 500 V/690 V AC auxiliary power supply is drawn from the line input voltage.

[3] The specified power loss represents the maximum value at 100 % utilization. The value is lower under normal operating conditions.

[4] Total of all motor cables and DC link. Longer cable lengths for specific configurations are available on request.

[5] The cabinet height increases by 250 mm (9.84 in) with degree of protection IP21, and by 400 mm (15.7 in) with degrees of protection IP23, IP43 or IP54.

[6] Current required to ensure reliable tripping of installed protective devices.

© Siemens 2024

Overview

Smart Line Modules are non-regulated infeed/regenerative units. The infeed occurs over a diode jumper, while stable, line-commutated regenerative feedback takes place via IGBTs with 100 % continuous energy regeneration. An autotransformer is not required for regenerative feedback.

The regenerative capability can be deactivated.

Smart Line Modules are suitable for connection to grounded TN/TT and non-grounded IT systems. The following voltages and power ratings are available:

Line voltage	Rated power
380 ... 480 V 3 AC	250 ... 800 kW
500 ... 690 V 3 AC	450 ... 1400 kW

The power ratings can be increased by connecting up to four identical Smart Line Modules in parallel.
For additional information, please refer to the SINAMICS Low Voltage Engineering Manual.

Design

IGBTs (fundamental frequency-switched) serve as Smart Line Module power semiconductors. Because this reduces switching losses, a high percentage of the power unit current can be utilized.

The current flows in the direction of the infeed via the freewheeling diodes of the IGBTs. This means that the Smart Line Module behaves in a similar way to the Basic Line Module. If the DC link voltage increases due to regenerative operation of the drives, the IGBTs conduct the current, thus feeding the energy back into the supply system.

In contrast to Active Line Modules, Smart Line Modules do not require a line-side filter; all they require is a line reactor (4 % u_k). The unit has a built-in pre-charging circuit for the DC link capacitors. For this reason, a main contactor or a motor-driven circuit breaker is absolutely essential. By specifying the option with order code **L44** for the Line Connection Modules, these components are appropriately accommodated in the Line Connection Module.

Parallel connection of Smart Line Modules to increase power rating

Up to four Smart Line Modules with the same power rating can be connected in parallel in order to increase power. Current derating of 7.5 % with respect to the rated current of each Smart Line Module must be taken into account when the system is dimensioned.

A connection of the Smart Line Modules connected in parallel using DRIVE-CLiQ must be taken into consideration during the engineering phase.

For additional information, please refer to the SINAMICS Low Voltage Engineering Manual.

A 4 % reactor is always required upstream of each Smart Line Module for the purpose of current symmetrization. This is integrated as standard. Just as with the Basic Line Modules, "mirror-image" power connections are available for Smart Line Modules, which enable parallel circuits to be realized in a compact design. Units that are arranged to the left of the Line Connection Module have the letter "**C**" at the penultimate position of the article number.
Example: 6SL3730-6TE41-1BC3 (see also the corresponding diagram for the Basic Line Modules).

Selection and ordering data

Rated power at 400 V or 690 V	Rated infeed/ regenerative feedback current	*Note for a parallel connection*	**Smart Line Module**
kW	A	*Mounting onto a Line Connection Module*	Article No.
Line voltage 380 ... 480 V 3 AC (DC link voltage 510 ... 650 V DC)			
250	463	–	**6SL3730-6TE35-5AA3**
355	614	–	**6SL3730-6TE37-3AA3**
500	883	–	**6SL3730-6TE41-1AA3**
		Right	**6SL3730-6TE41-1BA3**
		Left	**6SL3730-6TE41-1BC3**
630	1093	–	**6SL3730-6TE41-3AA3**
		Right	**6SL3730-6TE41-3BA3**
		Left	**6SL3730-6TE41-3BC3**
800	1430	–	**6SL3730-6TE41-7AA3**
		Right	**6SL3730-6TE41-7BA3**
		Left	**6SL3730-6TE41-7BC3**

Rated power at 400 V or 690 V	Rated infeed/ regenerative feedback current	*Note for a parallel connection*	**Smart Line Module**
kW	A	*Mounting onto a Line Connection Module*	Article No.
Line voltage 500 ... 690 V 3 AC (DC link voltage 675 ... 930 V DC)			
450	463	–	**6SL3730-6TG35-5AA3**
710	757	–	**6SL3730-6TG38-8AA3**
		Right	**6SL3730-6TG38-8BA3**
		Left	**6SL3730-6TG38-8BC3**
1000	1009	–	**6SL3730-6TG41-2AA3**
		Right	**6SL3730-6TG41-2BA3**
		Left	**6SL3730-6TG41-2BC3**
1400	1430	–	**6SL3730-6TG41-7AA3**
		Right	**6SL3730-6TG41-7BA3**
		Left	**6SL3730-6TG41-7BC3**

© Siemens 2024

Integration

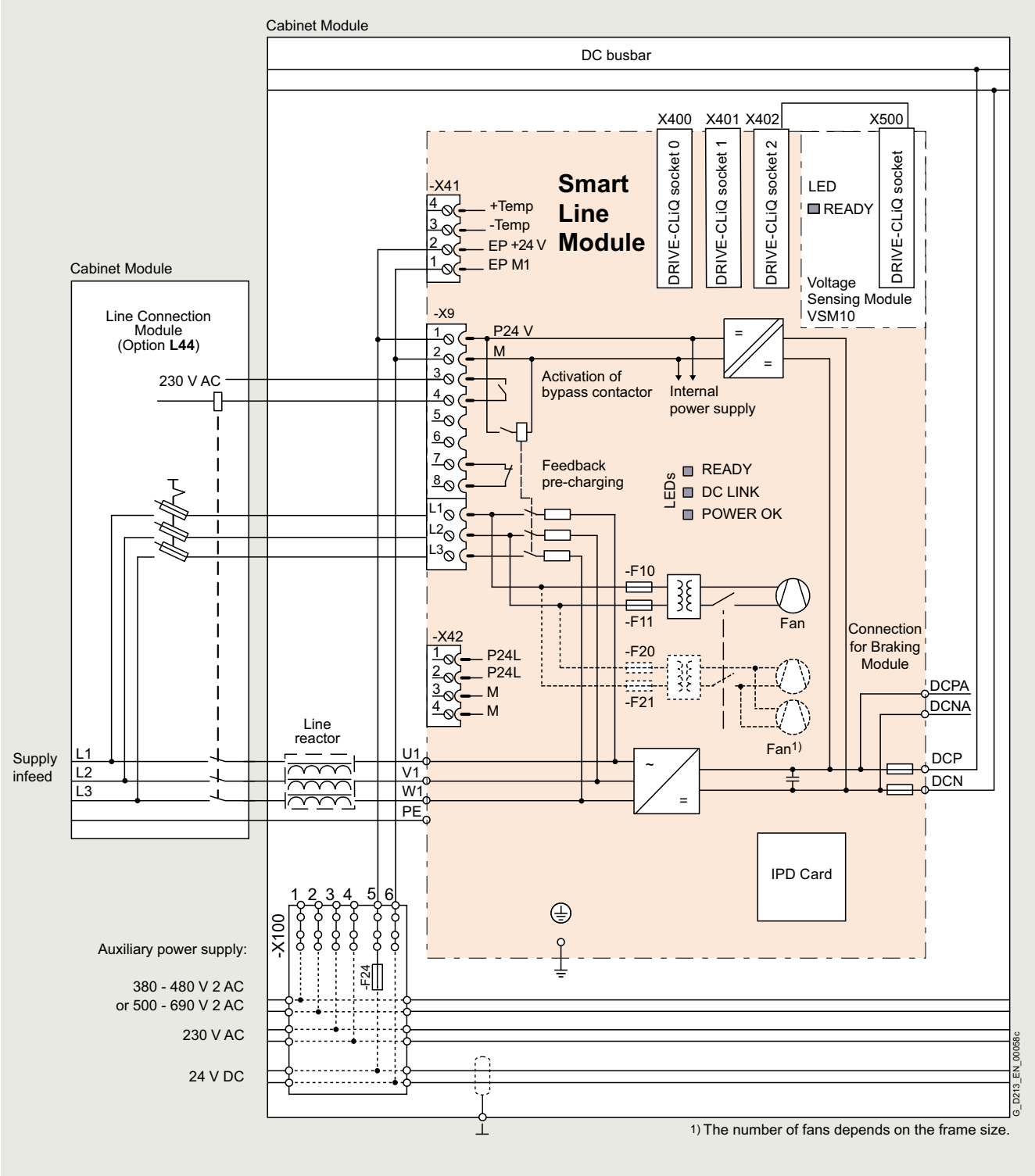

Connection example of a Smart Line Module

© Siemens 2024

Technical specifications

Line voltage 380 ... 480 V 3 AC		Smart Line Modules				
		6SL3730-6TE35-5AA3	6SL3730-6TE37-3AA3	6SL3730-6TE41-1AA3	6SL3730-6TE41-3AA3	6SL3730-6TE41-7AA3
For a parallel circuit configuration, mounted to the right of the Line Connection Module				*6SL3730-6TE41-1BA3*	*6SL3730-6TE41-3BA3*	*6SL3730-6TE41-7BA3*
For a parallel circuit configuration, mounted to the left of the Line Connection Module				*6SL3730-6TE41-1BC3*	*6SL3730-6TE41-3BC3*	*6SL3730-6TE41-7BC3*
Rated power						
• At $I_{N\,DC}$ (50 Hz 400 V)	kW	**250**	**355**	**500**	**630**	**800**
• At $I_{H\,DC}$ (50 Hz 400 V)	kW	235	315	450	555	730
• At $I_{N\,DC}$ (60 Hz 460 V)	hp	395	545	770	970	1230
• At $I_{H\,DC}$ (60 Hz 460 V)	hp	360	485	695	855	1125
DC link current						
• Rated current $I_{N\,DC}$	A	550	730	1050	1300	1700
• Base-load current $I_{H\,DC}$ [1]	A	490	650	934	1157	1513
• Maximum current $I_{max\,DC}$	A	825	1095	1575	1950	2550
Infeed/regenerative feedback current						
• Rated current $I_{N\,I}$	A	463	614	883	1093	1430
• Maximum current $I_{max\,I}$	A	694	921	1324	1639	2145
Current demand						
• 24 V DC auxiliary power supply	A	1.35	1.35	1.4	1.5	1.7
• 400 V AC [2]	A	1.8	1.8	3.6	5.4	5.4
DC link capacitance						
• Smart Line Module	µF	8400	12000	16800	18900	28800
• Drive line-up, max.	µF	42000	60000	67200	75600	115200
Power loss, max. [3]						
• At 50 Hz 400 V	kW	3.7	4.7	7.1	11.0	11.5
• At 60 Hz 460 V	kW	3.7	4.7	7.1	11.0	11.5
Cooling air requirement	m^3/s (ft^3/s)	0.36 (12.71)	0.36 (12.71)	0.78 (27.55)	1.08 (38.14)	1.08 (38.14)
Sound pressure level L_{pA} (1 m) at 50/60 Hz	dB	69/73	69/73	70/73	70/73	70/73
PE/GND connection		PE bar	PE bar	PE bar	PE bar	PE bar
• Busbar cross-section	mm^2	600	600	600	600	600
• Conductor cross-section, max. (IEC)	mm^2	240	240	240	240	240
Cable length, max. [4]						
• Shielded	m (ft)	4000 (13124)	4000 (13124)	4800 (15749)	4800 (15749)	4800 (15749)
• Unshielded	m (ft)	6000 (19686)	6000 (19686)	7200 (23623)	7200 (23623)	7200 (23623)
Degree of protection		IP20	IP20	IP20	IP20	IP20
Dimensions						
• Width	mm (in)	400 (15.75)	400 (15.75)	600 (23.62)	800 (31.50)	800 (31.50)
• Height [5]	mm (in)	2200 (86.61)	2200 (86.61)	2200 (86.61)	2200 (86.61)	2200 (86.61)
• Depth	mm (in)	600 (23.62)	600 (23.62)	600 (23.62)	600 (23.62)	600 (23.62)
Weight, approx.	kg (lb)	270 (595)	270 (595)	490 (1080)	775 (1709)	775 (1709)
Frame size		GX	GX	HX	JX	JX
Rated short-circuit current according to IEC	kA	65	65	84	84	100
Minimum short-circuit current [6]	kA	6.2	9.2	2	2.5	3.2

[1] The base-load current $I_{H\,DC}$ is the basis for a duty cycle of 150 % for 60 s or $I_{max\,DC}$ for 5 s with a duty cycle duration of 300 s.

[2] The current demand for the 400 V AC auxiliary power supply is drawn from the line input voltage.

[3] The specified power loss represents the maximum value at 100 % utilization. The value is lower under normal operating conditions.

[4] Total of all motor cables and DC link. Longer cable lengths for specific configurations are available on request.

[5] The cabinet height increases by 250 mm (9.84 in) with degree of protection IP21, and by 400 mm (15.7 in) with degrees of protection IP23, IP43 or IP54.

[6] Current required to ensure reliable tripping of installed protective devices.

© Siemens 2024

Technical specifications

Line voltage 500 ... 690 V 3 AC		**Smart Line Modules**			
		6SL3730-6TG35-5AA3	6SL3730-6TG38-8AA3	6SL3730-6TG41-2AA3	6SL3730-6TG41-7AA3
For a parallel circuit configuration, mounted to the right of the Line Connection Module			*6SL3730-6TG38-8BA3*	*6SL3730-6TG41-2BA3*	*6SL3730-6TG41-7BA3*
For a parallel circuit configuration, mounted to the left of the Line Connection Module			*6SL3730-6TG38-8BC3*	*6SL3730-6TG41-2BC3*	*6SL3730-6TG41-7BC3*
Rated power					
• At $I_{N\,DC}$ (50 Hz 690 V)	kW	**450**	**710**	**1000**	**1400**
• At $I_{H\,DC}$ (50 Hz 690 V)	kW	405	665	885	1255
• At $I_{N\,DC}$ (50 Hz 500 V)	kW	320	525	705	995
• At $I_{H\,DC}$ (50 Hz 500 V)	kW	295	480	640	910
• At $I_{N\,DC}$ (60 Hz 575 V)	hp	500	790	1115	1465
• At $I_{H\,DC}$ (60 Hz 575 V)	hp	450	740	990	1400
DC link current					
• Rated current $I_{N\,DC}$	A	550	900	1200	1700
• Base-load current $I_{H\,DC}$ [1]	A	490	800	1068	1513
• Maximum current $I_{max\,DC}$	A	825	1350	1800	2550
Infeed/regenerative feedback current					
• Rated current $I_{N\,I}$	A	463	757	1009	1430
• Maximum current $I_{max\,I}$	A	694	1135	1513	2145
Current demand					
• 24 V DC auxiliary power supply	A	1.35	1.4	1.5	1.7
• 500 V AC [2]	A	1.3	2.9	4.3	4.3
• 690 V AC	A	1	2.1	3.1	3.1
DC link capacitance					
• Smart Line Module	µF	5600	7400	11100	14400
• Drive line-up, max.	µF	28000	29600	44400	57600
Power loss, max. [3]					
• At 50 Hz 690 V	kW	4.3	6.5	12.0	13.8
• At 60 Hz 575 V	kW	4.3	6.5	12.0	13.8
Cooling air requirement	m^3/s (ft^3/s)	0.36 (12.71)	0.78 (27.55)	1.08 (38.14)	1.08 (38.14)
Sound pressure level L_{pA} (1 m) at 50/60 Hz	dB	69/73	70/73	70/73	70/73
PE/GND connection		PE bar	PE bar	PE bar	PE bar
• Busbar cross-section	mm^2	600	600	600	600
• Conductor cross-section, max. (IEC)	mm^2	240	240	240	240
Cable length, max. [4]					
• Shielded	m (ft)	2250 (7382)	2750 (9023)	2750 (9023)	2750 (9023)
• Unshielded	m (ft)	3375 (11073)	4125 (13534)	4125 (13534)	4125 (13534)
Degree of protection		IP20	IP20	IP20	IP20
Dimensions					
• Width	mm (in)	400 (15.75)	600 (23.62)	800 (31.50)	800 (31.50)
• Height [5]	mm (in)	2200 (86.61)	2200 (86.61)	2200 (86.61)	2200 (86.61)
• Depth	mm (in)	600 (23.62)	600 (23.62)	600 (23.62)	600 (23.62)
Weight, approx.	kg (lb)	270 (595)	550 (1213)	795 (1753)	795 (1753)
Frame size		GX	HX	JX	JX
Rated short-circuit current according to IEC	kA	65	84	100	100
Minimum short-circuit current [6]	kA	6.2	10.5	2.5	3.2

1) The base-load current $I_{H\,DC}$ is the basis for a duty cycle of 150 % for 60 s or $I_{max\,DC}$ for 5 s with a duty cycle duration of 300 s.

2) The current demand for the 500 V / 690 V AC auxiliary power supply is drawn from the line input voltage.

3) The specified power loss represents the maximum value at 100 % utilization. The value is lower under normal operating conditions.

4) Total of all motor cables and DC link. Longer cable lengths for specific configurations are available on request.

5) The cabinet height increases by 250 mm (9.84 in) with degree of protection IP21, and by 400 mm (15.7 in) with degrees of protection IP23, IP43 or IP54.

6) Current required to ensure reliable tripping of installed protective devices.

© Siemens 2024

Overview

Active Line Modules are regulated infeed/regenerative units. They can supply energy to the DC link and return regenerative energy to the supply system.

In contrast to Basic Line Modules and Smart Line Modules, Active Line Modules generate a stabilized DC voltage that is kept constant despite fluctuations in the line voltage (the line voltage must remain within the permissible tolerance range). Active Line Modules in combination with an Active Interface Module draw a virtually sinusoidal current from the supply system. Almost no harmonics occur.

A Braking Module and braking resistor are required only if the drives need to be decelerated in a controlled manner after a power failure (i.e. when energy cannot be recovered to the supply).

Active Line Modules are suitable for connection to grounded TN/TT and non-grounded IT systems. The following voltages and power ratings are available:

Line voltage	Rated power
380 ... 480 V 3 AC	132 ... 900 kW
500 ... 690 V 3 AC	630 ... 1400 kW

Design

Active Line Modules are always operated together with an Active Interface Module that contains the associated Clean Power Filter and pre-charging circuit. The integrated line filter ensures compliance with the EMC requirements for the "second environment".

The Active Line Module and Active Interface Module are supplied as a complete, fully wired unit, i.e. the customer does not need to supply any further cables or carry out any other wiring tasks.

Parallel connection of Active Line Modules to increase power rating

Active Line Modules are available for creating drive line-ups with more power. These modules can be operated in parallel on a common Line Connection Module and are arranged to the right and left of the Line Connection Module.

The power connections on the Active Line Module on the left of the Line Connection Module are a mirror image (article no. with "**C**" in the next to last position, example: 6SL3730-7T.41.-.B**C**3), which results in a very compact design for the line infeed.

Please note that only Active Line Modules with exactly the same power rating may be connected in parallel. The potential for imbalances in current distribution means that a current derating of 5 % applies; this must be taken into account when the modules are dimensioned.

A connection of the Active Line Modules connected in parallel using DRIVE-CLiQ must be taken into consideration during the engineering phase.

For additional information, please refer to the SINAMICS Low Voltage Engineering Manual.

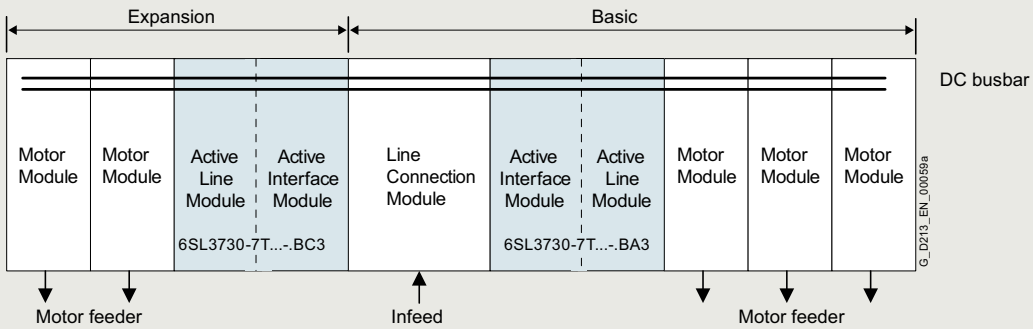

© Siemens 2024

Selection and ordering data

Rated power at 400 V	Rated infeed/ regenerative feedback current	*Note for a parallel connection*	**Active Line Module (incl. Active Interface Module)**
kW	A	*Mounting onto a Line Connection Module*	Article No.
Line voltage 380 ... 480 V 3 AC (DC link voltage 570 ... 720 V DC)			
132	210	–	**6SL3730-7TE32-1BA3**
160	260	–	**6SL3730-7TE32-6BA3**
235	380	–	**6SL3730-7TE33-8BA3**
300	490	–	**6SL3730-7TE35-0BA3**
380	605	–	**6SL3730-7TE36-1BA3**
500	840	–	**6SL3730-7TE38-4BA3**
630	985	–	**6SL3730-7TE41-0BA3**
		Left	**6SL3730-7TE41-0BC3**
900	1405	–	**6SL3730-7TE41-4BA3**
		Left	**6SL3730-7TE41-4BC3**

Rated power at 690 V	Rated infeed/ regenerative feedback current	*Note for a parallel connection*	**Active Line Module (incl. Active Interface Module)**
kW	A	*Mounting onto a Line Connection Module*	Article No.
Line voltage 500 ... 690 V 3 AC (DC link voltage 750 ... 1035 V DC)			
630	575	–	**6SL3730-7TG35-8BA3**
800	735	–	**6SL3730-7TG37-4BA3**
		Left	**6SL3730-7TG37-4BC3**
1100	1025	–	**6SL3730-7TG41-0BA3**
		Left	**6SL3730-7TG41-0BC3**
1400	1270	–	**6SL3730-7TG41-3BA3**
		Left	**6SL3730-7TG41-3BC3**

© Siemens 2024

Integration

The Active Line Module is controlled by the CU320-2 Control Unit. Communication between the Control Unit and module is established via DRIVE-CLiQ connections. The Active Interface Module is included in the scope of supply for the Active Line Module.

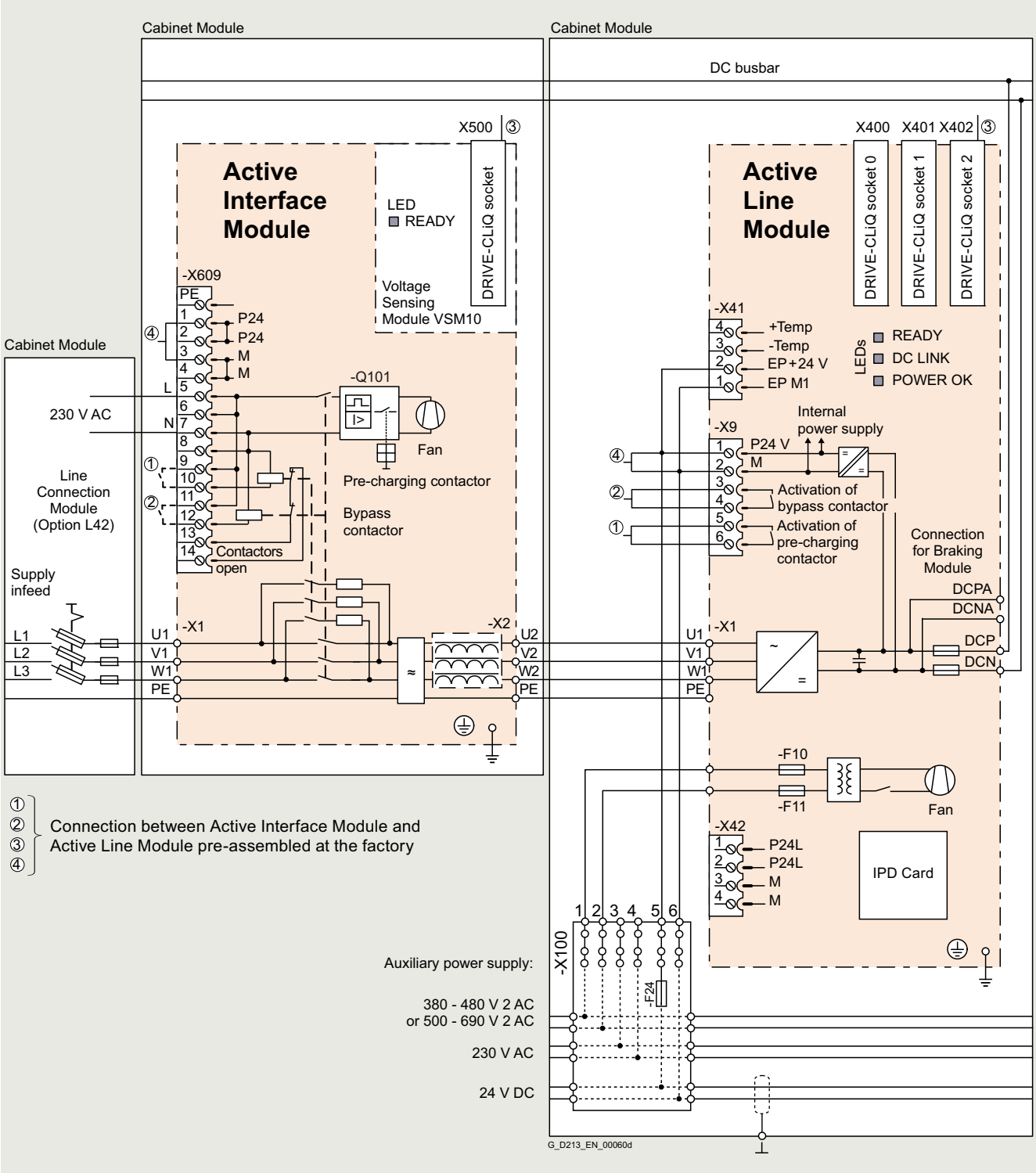

Connection example of an Active Line Module (frame size FI/FX and GI/GX)

© Siemens 2024

Integration

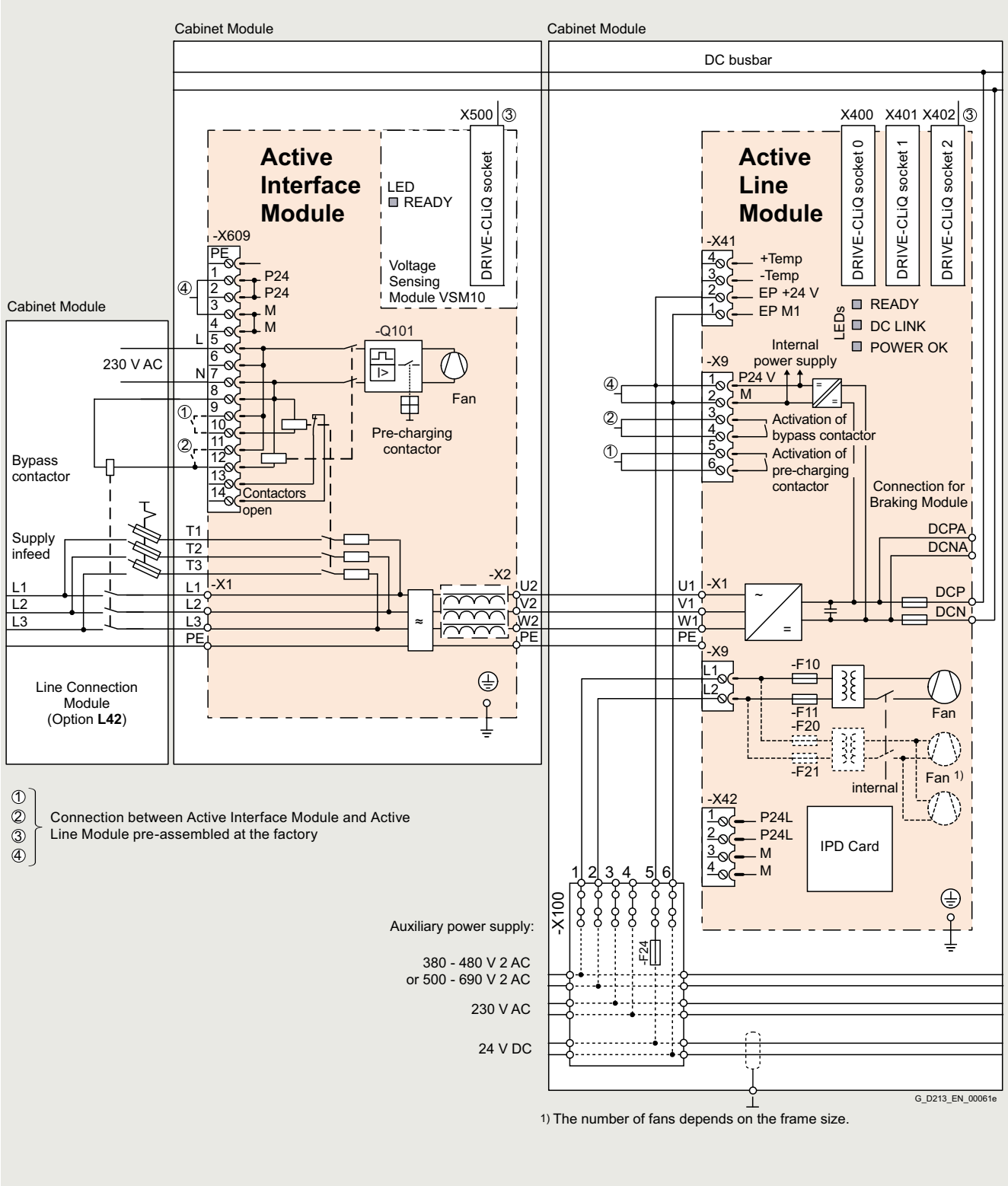

1) The number of fans depends on the frame size.

Connection example of an Active Line Module (frame size HI/HX and JI/JX)

© Siemens 2024

Technical specifications

Line voltage 380 ... 480 V 3 AC		Active Line Modules							
		6SL3730-7TE32-1BA3	6SL3730-7TE32-6BA3	6SL3730-7TE33-8BA3	6SL3730-7TE35-0BA3	6SL3730-7TE36-1BA3	6SL3730-7TE38-4BA3	6SL3730-7TE41-0BA3	6SL3730-7TE41-4BA3
For a parallel circuit configuration, mounted to the left of the Line Connection Module								*6SL3730-7TE41-0BC3*	*6SL3730-7TE41-4BC3*
Rated power									
• At $I_{N\,DC}$ (50 Hz 400 V)	kW	**132**	**160**	**235**	**300**	**380**	**500**	**630**	**900**
• At $I_{H\,DC}$ (50 Hz 400 V)	kW	115	145	210	270	335	465	545	780
• At $I_{N\,DC}$ (60 Hz 460 V)	hp	200	250	400	500	600	700	900	1250
• At $I_{H\,DC}$ (60 Hz 460 V)	hp	150	200	300	400	500	700	800	1000
DC link current									
• Rated current $I_{N\,DC}$	A	235	291	425	549	678	940	1103	1574
• Base-load current $I_{H\,DC}$ [1]	A	209	259	378	489	603	837	982	1404
• Maximum current $I_{max\,DC}$	A	352	436	637	823	1017	1410	1654	2361
Infeed/regenerative feedback current									
• Rated current $I_{N\,I}$	A	210	260	380	490	605	840	985	1405
• Maximum current $I_{max\,I}$	A	315	390	570	735	907	1260	1477	2107
Current demand									
• 24 V DC auxiliary power supply	A	1.27	1.27	1.52	1.52	1.57	1.57	1.67	1.67
• 230 V AC auxiliary power supply	A	0.6	0.6	1.2	1.2	4.6	4.6	4.9	4.9
• 400 V AC [2]	A	0.63	1.13	1.8	1.8	3.6	3.6	5.4	5.4
DC link capacitance									
• Active Line Module	µF	4200	5200	7800	9600	12600	16800	18900	28800
• Drive line-up, max.	µF	41600	41600	76800	76800	134400	134400	230400	230400
Power loss, max. [3]									
• At 50 Hz 400 V	kW	4.3	4.9	6.9	8.7	11.7	13.8	17.6	21.8
• At 60 Hz 460 V	kW	4.4	5.1	7.2	9.0	12.1	14.3	18.3	22.7
Cooling air requirement	m^3/s (ft^3/s)	0.47 (16.6)	0.47 (16.6)	0.83 (29.31)	0.83 (29.31)	1.18 (41.67)	1.18 (41.67)	1.48 (52.27)	1.48 (52.27)
Sound pressure level L_{pA} [4] (1 m) at 50/60 Hz	dB	71/73	71/73	72/74	72/74	77/79	77/79	78/80	78/80
PE/GND connection		PE bar	PE bar	PE bar	PE bar	PE bar	PE bar	PE bar	PE bar
• Busbar cross-section	mm^2	600	600	600	600	600	600	600	600
• Conductor cross-section, max. (IEC)	mm^2	240	240	240	240	240	240	240	240
Cable length, max. [5]									
• Shielded	m (ft)	2700 (8859)	2700 (8859)	2700 (8859)	2700 (8859)	3900 (12796)	3900 (12796)	3900 (12796)	3900 (12796)
• Unshielded	m (ft)	4050 (13288)	4050 (13288)	4050 (13288)	4050 (13288)	5850 (19194)	5850 (19194)	5850 (19194)	5850 (19194)
Degree of protection		IP20	IP20	IP20	IP20	IP20	IP20	IP20	IP20
Dimensions									
• Width	mm (in)	800 (31.50)	800 (31.50)	800 (31.50)	800 (31.50)	1000 (39.37)	1000 (39.37)	1400 (55.12)	1400 (55.12)
• Height [6]	mm (in)	2200 (86.61)	2200 (86.61)	2200 (86.61)	2200 (86.61)	2200 (86.61)	2200 (86.61)	2200 (86.61)	2200 (86.61)
• Depth	mm (in)	600 (23.62)	600 (23.62)	600 (23.62)	600 (23.62)	600 (23.62)	600 (23.62)	600 (23.62)	600 (23.62)
Weight, approx.	kg (lb)	380 (838)	380 (838)	530 (1169)	530 (1169)	930 (2051)	930 (2051)	1360 (2999)	1360 (2999)
Frame size		FX + FI	FX + FI	GX + GI	GX + GI	HX + HI	HX + HI	JX + JI	JX + JI
Rated short-circuit current according to IEC	kA	65	65	65	65	65	84	84	100
Minimum short-circuit current [7]	kA	6.2	10.5	10.5	10.5	12	2	4	6.4

1) The base-load current $I_{H\,DC}$ is the basis for a duty cycle of 150 % for 60 s or $I_{max\,DC}$ for 5 s with a duty cycle duration of 300 s.

2) The current demand for the 400 V AC auxiliary power supply is drawn from the line input voltage.

3) The specified power loss represents the maximum value at 100 % utilization. The value is lower under normal operating conditions.

4) Total sound pressure level of Active Interface Module and Active Line Module.

5) Total of all motor cables and DC link. Longer cable lengths for specific configurations are available on request.

6) The cabinet height increases by 250 mm (9.84 in) with degree of protection IP21, and by 400 mm (15.7 in) with degrees of protection IP23, IP43 or IP54.

7) Current required to ensure reliable tripping of installed protective devices.

© Siemens 2024

Technical specifications

Line voltage 500 ... 690 V 3 AC		**Active Line Modules**			
		6SL3730-7TG35-8BA3	6SL3730-7TG37-4BA3	6SL3730-7TG41-0BA3	6SL3730-7TG41-3BA3
For a parallel circuit configuration, mounted to the left of the Line Connection Module			*6SL3730-7TG37-4BC3*	*6SL3730-7TG41-0BC3*	6SL3730-7TG41-3BC3
Rated power					
• At $I_{N\,DC}$ (50 Hz 690 V)	kW	**630**	**800**	**1100**	**1400**
• At $I_{H\,DC}$ (50 Hz 690 V)	kW	620	705	980	1215
• At $I_{N\,DC}$ (50 Hz 500 V)	kW	447	560	780	965
• At $I_{H\,DC}$ (50 Hz 500 V)	kW	450	510	710	880
• At $I_{N\,DC}$ (60 Hz 575 V)	hp	675	900	1250	1500
• At $I_{H\,DC}$ (60 Hz 575 V)	hp	506	600	1000	1250
DC link current					
• Rated current $I_{N\,DC}$	A	644	823	1148	1422
• Base-load current $I_{H\,DC}$ [1]	A	573	732	1022	1266
• Maximum current $I_{max\,DC}$	A	966	1234	1722	2133
Infeed/regenerative feedback current					
• Rated current $I_{N\,I}$	A	575	735	1025	1270
• Maximum current $I_{max\,I}$	A	862	1102	1537	1905
Current demand [2]					
• 24 V DC auxiliary power supply	A	1.57	1.67	1.87	1.87
• 230 V AC auxiliary power supply	A	4.6	4.9	4.9	4.9
• 500 V AC	A	3.0	4.4	4.4	4.4
• 690 V AC	A	2.1	3.1	3.1	3.1
DC link capacitance					
• Active Line Module	µF	7400	11100	14400	19200
• Drive line-up, max.	µF	59200	153600	153600	153600
Power loss, max. [3]					
• At 50 Hz 500/690 V	kW	13.6	19.2	22.8	26.1
• At 60 Hz 575 V	kW	13.0	18.6	22.1	24.9
Cooling air requirement	m^3/s (ft^3/s)	1.18 (41.67)	1.48 (52.27)	1.48 (52.27)	1.48 (52.27)
Sound pressure level L_{pA} [4] (1 m) at 50/60 Hz	dB	77/79	77/79	77/79	77/79
PE/GND connection		PE bar	PE bar	PE bar	PE bar
• Busbar cross-section	mm^2	600	600	600	600
• Conductor cross-section, max. (IEC)	mm^2	240	240	240	240
Cable length, max. [5]					
• Shielded	m (ft)	2250 (7382)	2250 (7382)	2250 (7382)	2250 (7382)
• Unshielded	m (ft)	3375 (11073)	3375 (11073)	3375 (11073)	3375 (11073)
Degree of protection		IP20	IP20	IP20	IP20
Dimensions					
• Width	mm (in)	1000 (39.37)	1400 (55.12)	1400 (55.12)	1400 (55.12)
• Height [6]	mm (in)	2200 (86.61)	2200 (86.61)	2200 (86.61)	2200 (86.61)
• Depth	mm (in)	600 (23.62)	600 (23.62)	600 (23.62)	600 (23.62)
Weight, approx.	kg (lb)	930 (2051)	1360 (2999)	1360 (2999)	1360 (2999)
Frame size		HX + HI	JX + JI	JX + JI	JX + JI
Rated short-circuit current according to IEC	kA	65	84	100	100
Minimum short-circuit current [7]	kA	9	10.5	2.5	3.2
• For connection in parallel	kA	–	*4*	*4*	*5*

[1] The base-load current $I_{H\,DC}$ is the basis for a duty cycle of 150 % for 60 s or $I_{max\,DC}$ for 5 s with a duty cycle duration of 300 s.

[2] The current demand for the 500 V/690 V AC auxiliary power supply is drawn from the line input voltage.

[3] The specified power loss represents the maximum value at 100 % utilization. The value is lower under normal operating conditions.

[4] Total sound pressure level of Active Interface Module and Active Line Module.

[5] Total of all motor cables and DC link. Longer cable lengths for specific configurations are available on request.

[6] The cabinet height increases by 250 mm (9.84 in) with degree of protection IP21, and by 400 mm (15.7 in) with degrees of protection IP23, IP43 or IP54.

[7] Current required to ensure reliable tripping of installed protective devices.

© Siemens 2024

Overview

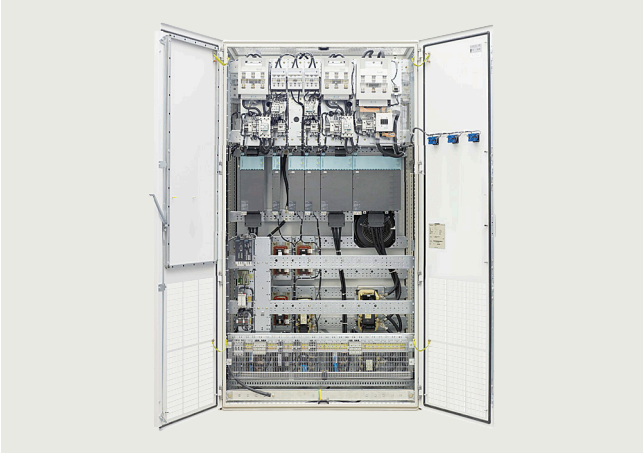

Motor Modules Booksize format are also available as Booksize Cabinet Kits in voltage class 380 V to 480 V (DC link voltage 510 V to 720 V).

Motor Modules are also available as Single Motor Modules for power ratings of 4.8 kW to 71 kW for connection of a motor.

Design

Motor Modules Booksize format are installed in the factory as Booksize Cabinet Kits in Booksize Base Cabinets. This complete unit contains all of the components necessary for operation.

Several Booksize Cabinet Kits can be installed in one Booksize Base Cabinet, depending on the installation width requirements, which in turn depend on the power rating. The number of Booksize Cabinet Kits that can be installed in a Booksize Base Cabinet is determined solely on the basis of the available cabinet width. By changing the way in which the cabinet width is used (i.e. the equipment that is installed), it can be adapted to suit system requirements.

Each Motor Module is connected separately to the DC busbar of the SINAMICS S120 Cabinet Module via a separate fuse switch disconnector with integrated fuses. The DC connecting busbar integrated in the units is not used.

The basic version of the Booksize Cabinet Kit comprises the following components:

- Motor Module in booksize format
- Fuse switch disconnector for each Motor Module installed
- Customer interface -X55.1 located in the connection area of the Booksize Base Cabinet
- Shield connection plate
- Complete electrical connection to the Booksize Base Cabinet interfaces

The Booksize Base Cabinets can be operated up to and including IP54 degree of protection without additional temperature derating. However, some values need to be taken into account that differ from those of the chassis format.
For derating data, see Air-cooled units > Characteristic curves.

Selection and ordering data

Type rating at 400 V	Rated output current I_N	Width	**Single Motor Module Booksize Cabinet Kit**
kW	A	mm (in)	Article No.
Line voltage 380 ... 480 V 3 AC (DC link voltage 510 ... 720 V DC)			
4.8	9	100 (3.94)	**6SL3720-1TE21-0AB4**
9.7	18	100 (3.94)	**6SL3720-1TE21-8AB4**
16	30	100 (3.94)	**6SL3720-1TE23-0AB4**
24	45	200 (7.87)	**6SL3720-1TE24-5AB4**
32	60	200 (7.87)	**6SL3720-1TE26-0AB4**
46	85	200 (7.87)	**6SL3720-1TE28-5AB3**
71	132	300 (11.8)	**6SL3720-1TE31-3AB3**

Booksize Cabinet Kits must always be ordered in combination with at least one Booksize Base Cabinet (cannot be supplied as a single unit).

The required number of Booksize Cabinet Kits installed in a Booksize Base Cabinet must be stated in plain text in the order. The number of possible kits is limited only by the usable installation width of the Booksize Base Cabinet.

Booksize Base Cabinets ready to be installed in the Booksize Cabinet Kits:

Usable installation width	Weight, approx.	Dimensions with degree of protection IP20 [1] (W × D × H)	**Booksize Base Cabinet**
mm (in)	kg (lb)	mm (in)	Article No.
600 (23.6)	170 (375)	800 × 600 × 2200 (31.5 × 23.6 × 86.6)	**6SL3720-1TX38-0AA3**
1000 (39.4)	240 (529)	1200 × 600 × 2200 (47.2 × 23.6 × 86.6)	**6SL3720-1TX41-2AA3**

[1] The cabinet height increases by 250 mm (9.84 in) with degree of protection IP21, and by 400 mm (15.7 in) with degrees of protection IP23, IP43 and IP54.

© Siemens 2024

Integration

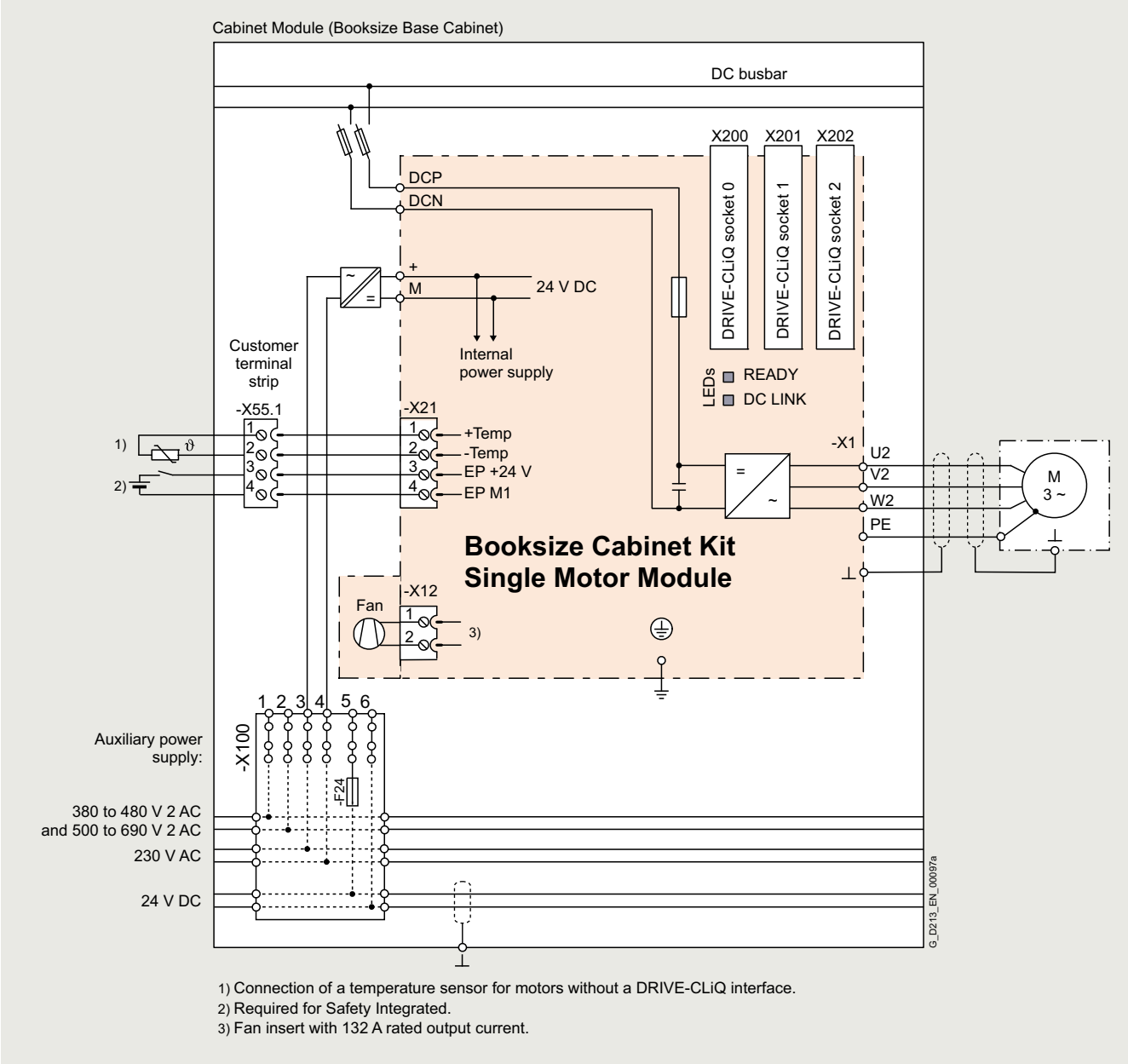

1) Connection of a temperature sensor for motors without a DRIVE-CLiQ interface.
2) Required for Safety Integrated.
3) Fan insert with 132 A rated output current.

Connection example of a Booksize Cabinet Kit (Single Motor Module in booksize format) in Booksize Base Cabinet

© Siemens 2024

Technical specifications

Line voltage 380 ... 480 V 3 AC DC link voltage 510 ... 720 V DC		Single Motor Modules Booksize Cabinet Kit			
		6SL3720-1TE21-0AB4	6SL3720-1TE21-8AB4	6SL3720-1TE23-0AB4	6SL3720-1TE24-5AB4
Type rating					
• At I_L (50 Hz 400 V) [1]	kW	**4.8**	**9.7**	**16**	**24**
• At I_H (50 Hz 400 V) [1]	kW	4.1	8.2	13.7	21
• At I_L (60 Hz 460 V) [2]	hp	5	10	20	30
• At I_H (60 Hz 460 V) [2]	hp	5	10	15	25
Output current					
• Rated current $I_{N\,O}$	A	9	18	30	45
• Base-load current I_H [3]	A	7.7	15.3	25.5	38
• Maximum current $I_{max\,O}$	A	27	54	90	90
DC link current I_d [4]	A	11	22	36	54
Current demand					
• 24 V DC, max.	A	0.75	0.75	0.8	0.9
DC link capacitance	µF	110	220	705	1230
Pulse frequency [5]					
• Rated frequency	kHz	4	4	4	4
• Pulse frequency, max.					
- With current derating	kHz	16	16	16	16
Power loss, max. [6]					
• At 50 Hz 400 V	kW	0.08	0.165	0.29	0.36
• At 60 Hz 460 V	kW	0.08	0.165	0.29	0.36
Cooling air requirement	m^3/s (ft^3/s)	0.009 (0.32)	0.009 (0.32)	0.016 (0.57)	0.023 (0.81)
Sound pressure level L_{pA} (1 m) at 50/60 Hz	dB	<60	<60	<60	<65
Motor connection U2, V2, W2		Terminal	Terminal	Terminal	Terminal
• Conductor cross-section, max. (IEC)	mm^2	6	6	6	16
Cable length, max. [7]					
• Shielded	m (ft)	50 (164)	70 (230)	100 (328)	100 (328)
• Unshielded	m (ft)	75 (246)	100 (328)	150 (492)	150 (492)
PE/GND connection		PE bar	PE bar	PE bar	PE bar
• Busbar cross-section	mm^2	600	600	600	600
• Conductor cross-section, max. (IEC)	mm^2	240	240	240	240
Degree of protection		IP20	IP20	IP20	IP20
Weight, approx.	kg (lb)	20 (44.1)	20 (44.1)	21.9 (48.3)	27 (59.5)
Width	mm (in)	100 (3.94)	100 (3.94)	100 (3.94)	200 (7.87)
Rated short-circuit current according to IEC	kA	65	65	65	65

1) Rated power of a typical 6-pole standard induction motor based on I_L or I_H for 400 V 3 AC 50 Hz.

2) Rated power of a typical 6-pole standard induction motor based on I_L or I_H for 460 V 3 AC 60 Hz.

3) The base-load current I_L is based on a load cycle of 110 % for 60 s or 150 % for 10 s with a load cycle duration of 300 s.

4) For a DC link voltage of 600 V DC.

5) Information regarding the correlation between the pulse frequency and max. output current/output frequency is provided in the SINAMICS Low Voltage Engineering Manual.

6) The specified power loss represents the maximum value at 100 % utilization. The value is lower under normal operating conditions.

7) Total of all motor cables. Longer cable lengths for specific configurations are available on request.

© Siemens 2024

Technical specifications

Line voltage 380 ... 480 V 3 AC DC link voltage 510 ... 720 V DC		Single Motor Modules Booksize Cabinet Kit		
		6SL3720-1TE26-0AB4	6SL3720-1TE28-5AB3	6SL3720-1TE31-3AB3
Type rating				
• At I_L (50 Hz 400 V) [1]	kW	**32**	**46**	**71**
• At I_H (50 Hz 400 V) [1]	kW	28	37	57
• At I_L (60 Hz 460 V) [2]	hp	40	60	100
• At I_H (60 Hz 460 V) [2]	hp	40	50	75
Output current				
• Rated current $I_{N\,O}$	A	60	85	132
• Base-load current I_H [3]	A	51	68	105
• Maximum current $I_{max\,O}$	A	120	141	210
DC link current I_d [4]	A	72	102	158
Current demand				
• 24 V DC, max.	A	0.9	1.5	1.5
DC link capacitance	µF	1410	1880	2820
Pulse frequency [5]				
• Rated frequency	kHz	4	4	4
• Pulse frequency, max.				
- With current derating	kHz	16	16	16
Power loss, max. [6]				
• At 50 Hz 400 V	kW	0.48	0.75	1.25
• At 60 Hz 460 V	kW	0.48	0.75	1.25
Cooling air requirement	m^3/s (ft^3/s)	0.023 (0.81)	0.044 (1.55)	0.144 (5.09)
Sound pressure level L_{pA} (1 m) at 50/60 Hz	dB	<65	<60	<73
Motor connection U2, V2, W2		Terminal	Terminal	Terminal
• Conductor cross-section, max. (IEC)	mm^2	16	35	70
Cable length, max. [7]				
• Shielded	m (ft)	100 (328)	100 (328)	100 (328)
• Unshielded	m (ft)	150 (492)	150 (492)	150 (492)
PE/GND connection		PE bar	PE bar	PE bar
• Busbar cross-section	mm^2	600	600	600
• Conductor cross-section, max. (IEC)	mm^2	240	240	240
Degree of protection		IP20	IP20	IP20
Weight, approx.	kg (lb)	27 (59.5)	33 (72.8)	41 (90.4)
Width	mm (in)	200 (7.87)	200 (7.87)	300 (11.8)
Rated short-circuit current according to IEC	kA	65	65	65

1) Rated power of a typical 6-pole standard induction motor based on I_L or I_H for 400 V 3 AC 50 Hz.

2) Rated power of a typical 6-pole standard induction motor based on I_L or I_H for 460 V 3 AC 60 Hz.

3) The base-load current I_L is based on a load cycle of 110 % for 60 s or 150 % for 10 s with a load cycle duration of 300 s.

4) For a DC link voltage of 600 V DC.

5) Information regarding the correlation between the pulse frequency and max. output current/output frequency is provided in the SINAMICS Low Voltage Engineering Manual.

6) The specified power loss represents the maximum value at 100 % utilization. The value is lower under normal operating conditions.

7) Total of all motor cables. Longer cable lengths for specific configurations are available on request.

© Siemens 2024

Motor Modules in chassis format

Overview

Motor Modules in chassis format are available in the power range from 75 kW to 1200 kW.

Line voltage	DC link voltage	Type rating
380 ... 480 V 3 AC	510 ... 720 V DC	110 ... 800 kW
500 ... 690 V 3 AC	675 ... 1035 V DC	75 ... 1200 kW

By connecting in parallel up to four Motor Modules operated on one Control Unit and which supply one motor, it is possible to increase the available shaft power to a maximum of approx. 4500 kW (taking into account the derating factors according to the SINAMICS Low Voltage Engineering Manual).

SINAMICS S120 Motor Modules in chassis format can also be used as Braking Modules (braking choppers) if, instead of a motor, a 3-phase braking resistor is connected.
For additional information, please refer to the SINAMICS Low Voltage Engineering Manual.

Design

Motor Modules in chassis format contain the following components as standard:

- Retaining device for the DC busbar, including the connection to the DC connections of the Motor Module
- Nickel-plated connection busbars for motor cables for Motor Modules, frame sizes FX and GX; for Motor Modules, frame sizes HX and JX, the connection is made directly on the unit
- Cable retaining bar for the power cables
- DRIVE-CLiQ interface (3 DRIVE-CLiQ sockets), without Control Unit
- Customer interface -X55
- Auxiliary power supply system (6-pole) for the auxiliary power supply, including cable connections for looping through to the next Cabinet Module
- Nickel-plated PE busbar (60 x 10 mm), including jumper for looping through to the next Cabinet Module
- EMC-compliant design thanks to additional shielding measures and appropriately routed cables

Selection and ordering data

Type rating at 400 V or 690 V	Rated output current I_N	**Motor Module in chassis format**
kW	A	Article No.
Line voltage 380 ... 480 V 3 AC (DC link voltage 510 ... 720 V DC)		
110	210	**6SL3720-1TE32-1AA3**
132	260	**6SL3720-1TE32-6AA3**
160	310	**6SL3720-1TE33-1AA3**
200	380	**6SL3720-1TE33-8AA3**
250	490	**6SL3720-1TE35-0AA3**
315	605	**6SL3720-1TE36-1AA3**
400	745	**6SL3720-1TE37-5AA3**
450	840	**6SL3720-1TE38-4AA3**
560	985	**6SL3720-1TE41-0AA3**
710	1260	**6SL3720-1TE41-2AA3**
800	1405	**6SL3720-1TE41-4AA3**
Line voltage 500 ... 690 V 3 AC (DC link voltage 675 ... 1035 V DC)		
75	85	**6SL3720-1TG28-5AA3**
90	100	**6SL3720-1TG31-0AA3**
110	120	**6SL3720-1TG31-2AA3**
132	150	**6SL3720-1TG31-5AA3**
160	175	**6SL3720-1TG31-8AA3**
200	215	**6SL3720-1TG32-2AA3**
250	260	**6SL3720-1TG32-6AA3**
315	330	**6SL3720-1TG33-3AA3**
400	410	**6SL3720-1TG34-1AA3**
450	465	**6SL3720-1TG34-7AA3**
560	575	**6SL3720-1TG35-8AA3**
710	735	**6SL3720-1TG37-4AA3**
800	810	**6SL3720-1TG38-1AA3**
900	910	**6SL3720-1TG38-8AA3**
1000	1025	**6SL3720-1TG41-0AA3**
1200	1270	**6SL3720-1TG41-3AA3**

© Siemens 2024

Integration

Motor Modules are controlled by the CU320-2 DP or CU320-2 PN Control Unit. Communication between the Control Unit and Modules is established via a DRIVE-CLiQ connection.

If the Control Unit is integrated in the same cabinet as an option with order code **K90** or **K95**, these communication cables will already be installed. If the Control Unit is to be mounted externally, the DRIVE-CLiQ cable will not be included in the scope of supply and must be configured on site.

For additional information, please refer to the SINAMICS Low Voltage Engineering Manual.

For a description of the customer terminal strip, see section Customer terminal strip -X55.

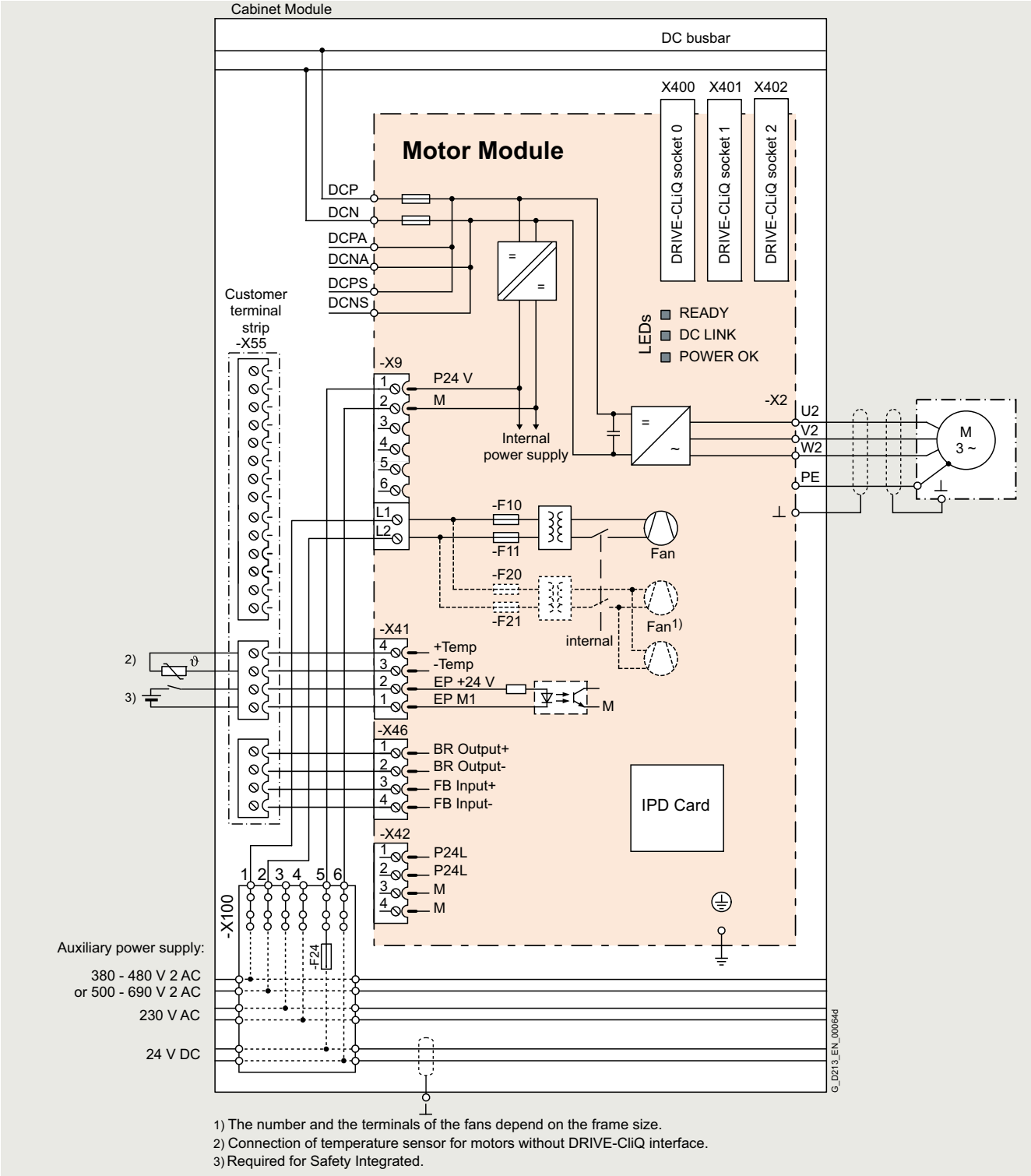

1) The number and the terminals of the fans depend on the frame size.
2) Connection of temperature sensor for motors without DRIVE-CliQ interface.
3) Required for Safety Integrated.

Connection example of a Motor Module in chassis format

© Siemens 2024

Technical specifications

Line voltage 380 ... 480 V 3 AC DC link voltage 510 ... 720 V DC		Motor Modules in chassis format					
		6SL3720-1TE32-1AA3	6SL3720-1TE32-6AA3	6SL3720-1TE33-1AA3	6SL3720-1TE33-8AA3	6SL3720-1TE35-0AA3	6SL3720-1TE36-1AA3
Type rating							
• At I_L (50 Hz 400 V) [1]	kW	**110**	**132**	**160**	**200**	**250**	**315**
• At I_H (50 Hz 400 V) [1]	kW	90	110	132	160	200	250
• At I_L (60 Hz 460 V) [2]	hp	150	200	250	300	400	500
• At I_H (60 Hz 460 V) [2]	hp	150	200	200	250	350	350
Output current							
• Rated current $I_{N\,O}$	A	210	260	310	380	490	605
• Base-load current I_L [3]	A	205	250	302	370	477	590
• Base-load current I_H [4]	A	178	233	277	340	438	460
• Maximum current $I_{max\,O}$	A	307	375	453	555	715	885
DC link current							
• Rated current $I_{N\,DC}$ when supplied via							
- Basic/Smart Line Module	A	252	312	372	456	588	726
- Active Line Module	A	227	281	335	411	529	653
• Base-load current $I_{L\,DC}$ [3] when supplied via							
- Basic/Smart Line Module	A	245	304	362	444	573	707
- Active Line Module	A	221	273	326	400	515	636
• Base-load current $I_{H\,DC}$ [4] when supplied via							
- Basic/Smart Line Module	A	224	277	331	405	523	646
- Active Line Module	A	202	250	298	365	470	581
Current demand							
• 24 V DC auxiliary power supply	A	0.8	0.8	0.9	0.9	0.9	1.0
• 400 V AC	A	0.63	1.13	1.8	1.8	1.8	3.6
DC link capacitance	µF	4200	5200	6300	7800	9600	12600
Pulse frequency [5]							
• Rated frequency	kHz	2	2	2	2	2	1.25
• Pulse frequency, max.							
- Without current derating	kHz	2	2	2	2	2	1.25
- With current derating	kHz	8	8	8	8	8	8
Power loss, max. [6]							
• At 50 Hz 400 V	kW	1.86	2.5	2.96	3.67	4.28	5.84
• At 60 Hz 460 V	kW	1.94	2.6	3.1	3.8	4.5	6.3
Cooling air requirement	m^3/s (ft^3/s)	0.17 (6.00)	0.23 (8.12)	0.36 (12.7)	0.36 (12.7)	0.36 (12.7)	0.78 (27.5)
Sound pressure level L_{pA} (1 m) at 50/60 Hz	dB	67	69	69	69	69	72
Motor connection U2, V2, W2		M12 screws	M12 screws	M12 screws	M12 screws	M12 screws	M12 screws
• Conductor cross-section, max. (IEC)	mm^2	2 × 185	2 × 185	2 × 240	2 × 240	2 × 240	4 × 240
Cable length, max. [7]							
• Shielded	m (ft)	300 (984)	300 (984)	300 (984)	300 (984)	300 (984)	300 (984)
• Unshielded	m (ft)	450 (1476)	450 (1476)	450 (1476)	450 (1476)	450 (1476)	450 (1476)
PE/GND connection		PE bar	PE bar	PE bar	PE bar	PE bar	PE bar
• Busbar cross-section	mm^2	600	600	600	600	600	600
• Conductor cross-section, max. (IEC)	mm^2	240	240	240	240	240	240
Degree of protection		IP20	IP20	IP20	IP20	IP20	IP20
Dimensions							
• Width [8]	mm (in)	400 (15.75)	400 (15.75)	400 (15.75)	400 (15.75)	400 (15.75)	600 (23.62)
• Height [9]	mm (in)	2200 (86.61)	2200 (86.61)	2200 (86.61)	2200 (86.61)	2200 (86.61)	2200 (86.61)
• Depth	mm (in)	600 (23.62)	600 (23.62)	600 (23.62)	600 (23.62)	600 (23.62)	600 (23.62)
Weight, approx.	kg (lb)	145 (320)	145 (320)	286 (631)	286 (631)	286 (631)	490 (1080)
Frame size		FX	FX	GX	GX	GX	HX
Rated short-circuit current according to IEC	kA	65	65	65	65	65	65

[1] Rated power of a typical 6-pole standard induction motor based on I_L or I_H for 400 V 3 AC 50 Hz.

[2] Rated power of a typical 6-pole standard induction motor based on I_L or I_H for 460 V 3 AC 60 Hz.

[3] The base-load current I_L is based on a duty cycle of 110 % for 60 s or 150 % for 10 s with a duty cycle duration of 300 s.

[4] The base-load current I_H is based on a duty cycle of 150 % for 60 s or 160 % for 10 s with a duty cycle duration of 300 s.

[5] Information regarding the correlation between the pulse frequency and max. output current/output frequency is provided in the SINAMICS Low Voltage Engineering Manual.

[6] The specified power loss represents the maximum value at 100 % utilization. The value is lower under normal operating conditions.

[7] Total of all motor cables. Longer cable lengths for specific configurations are available on request. For additional information, please refer to the SINAMICS Low Voltage Engineering Manual.

[8] With option **L10** (dv/dt filter plus VPL):
- Frame sizes FX/GX/HX/JX: Additional cabinet 600 mm (23.62 in) wide.
With option **L34** (circuit breaker on the output side):
- Frame size FX/GX: Additional cabinet 400 mm (15.7 in) wide
- Frame size HX/JX: Additional cabinet 600 mm (23.62 in) wide.

[9] The cabinet height increases by 250 mm (9.84 in) with degree of protection IP21, and by 400 mm (15.7 in) with degrees of protection IP23, IP43 and IP54.

© Siemens 2024

Technical specifications

Line voltage 380 ... 480 V 3 AC DC link voltage 510 ... 720 V DC		Motor Modules in chassis format				
		6SL3720-1TE37-5AA3	6SL3720-1TE38-4AA3	6SL3720-1TE41-0AA3	6SL3720-1TE41-2AA3	6SL3720-1TE41-4AA3
Type rating						
• At I_L (50 Hz 400 V) [1]	kW	**400**	**450**	**560**	**710**	**800**
• At I_H (50 Hz 400 V) [1]	kW	315	400	450	560	710
• At I_L (60 Hz 460 V) [2]	hp	600	700	800	1000	1150
• At I_H (60 Hz 460 V) [2]	hp	450	600	700	900	1000
Output current						
• Rated current $I_{N\,O}$	A	745	840	985	1260	1405
• Base-load current I_L [3]	A	725	820	960	1230	1370
• Base-load current I_H [4]	A	570	700	860	1127	1257
• Maximum current $I_{max\,O}$	A	1087	1230	1440	1845	2055
DC link current						
• Rated current $I_{N\,DC}$ when supplied via						
- Basic/Smart Line Module	A	894	1008	1182	1512	1686
- Active Line Module	A	805	907	1064	1361	1517
• Base-load current $I_{L\,DC}$ [3] when supplied via						
- Basic/Smart Line Module	A	871	982	1152	1474	1643
- Active Line Module	A	784	884	1037	1326	1479
• Base-load current $I_{H\,DC}$ [4] when supplied via						
- Basic/Smart Line Module	A	795	897	1051	1345	1500
- Active Line Module	A	716	807	946	1211	1350
Current demand						
• 24 V DC auxiliary power supply	A	1.0	1.0	1.25	1.4	1.4
• 400 V AC	A	3.6	3.6	5.4	5.4	5.4
DC link capacitance	µF	15600	16800	18900	26100	28800
Pulse frequency [5]						
• Rated frequency	kHz	1.25	1.25	1.25	1.25	1.25
• Pulse frequency, max.						
- Without current derating	kHz	1.25	1.25	1.25	1.25	1.25
- With current derating	kHz	8	8	8	8	8
Power loss, max. [6]						
• At 50 Hz 400 V	kW	6.68	7.15	9.5	11.1	12.0
• At 60 Hz 460 V	kW	7.3	7.8	10.2	12.0	13.0
Cooling air requirement	m^3/s (ft^3/s)	0.78 (27.5)	0.78 (27.5)	1.08 (38.1)	1.08 (38.1)	1.08 (38.1)
Sound pressure level L_{pA} (1 m) at 50/60 Hz	dB	72	72	72	72	72
Motor connection U2, V2, W2		M12 screws	M12 screws	M12 screws	M12 screws	M12 screws
• Conductor cross-section, max. (IEC)	mm^2	4 × 240	4 × 240	6 × 240	6 × 240	6 × 240
Cable length, max. [7]						
• Shielded	m (ft)	300 (984)	300 (984)	300 (984)	300 (984)	300 (984)
• Unshielded	m (ft)	450 (1476)	450 (1476)	450 (1476)	450 (1476)	450 (1476)
PE/GND connection		PE bar	PE bar	PE bar	PE bar	PE bar
• Busbar cross-section	mm^2	600	600	600	600	600
• Conductor cross-section, max. (IEC)	mm^2	240	240	240	240	240
Degree of protection		IP20	IP20	IP20	IP20	IP20
Dimensions						
• Width [8]	mm (in)	600 (23.62)	600 (23.62)	800 (31.50)	800 (31.50)	800 (31.50)
• Height [9]	mm (in)	2200 (86.61)	2200 (86.61)	2200 (86.61)	2200 (86.61)	2200 (86.61)
• Depth	mm (in)	600 (23.62)	600 (23.62)	600 (23.62)	600 (23.62)	600 (23.62)
Weight, approx.	kg (lb)	490 (1080)	490 (1080)	700 (1544)	700 (1544)	700 (1544)
Frame size		HX	HX	JX	JX	JX
Rated short-circuit current according to IEC	kA	65	84	84	100	100

[1] Rated power of a typical 6-pole standard induction motor based on I_L or I_H for 400 V 3 AC 50 Hz.

[2] Rated power of a typical 6-pole standard induction motor based on I_L or I_H for 460 V 3 AC 60 Hz.

[3] The base-load current I_L is based on a duty cycle of 110 % for 60 s or 150 % for 10 s with a duty cycle duration of 300 s.

[4] The base-load current I_H is based on a duty cycle of 150 % for 60 s or 160 % for 10 s with a duty cycle duration of 300 s.

[5] Information regarding the correlation between the pulse frequency and max. output current/output frequency is provided in the SINAMICS Low Voltage Engineering Manual.

[6] The specified power loss represents the maximum value at 100 % utlization. The value is lower under normal operating conditions.

[7] Total of all motor cables. Longer cable lengths for specific configurations are available on request. For additional information, please refer to the SINAMICS Low Voltage Engineering Manual.

[8] With option **L10** (dv/dt filter plus VPL):
- Frame sizes FX/GX/HX/JX: Additional cabinet 600 mm (23.62 in) wide.
With option **L34** (circuit breaker on the output side):
- Frame size FX/GX: Additional cabinet 400 mm (15.7 in) wide
- Frame size HX/JX: Additional cabinet 600 mm (23.62 in) wide.

[9] The cabinet height increases by 250 mm (9.84 in) with degree of protection IP21, and by 400 mm (15.7 in) with degrees of protection IP23, IP43 and IP54.

© Siemens 2024

Technical specifications

Line voltage 500 ... 690 V 3 AC DC link voltage 675 … 1035 V DC		Motor Modules in chassis format					
		6SL3720-1TG28-5AA3	6SL3720-1TG31-0AA3	6SL3720-1TG31-2AA3	6SL3720-1TG31-5AA3	6SL3720-1TG31-8AA3	6SL3720-1TG32-2AA3
Type rating							
• At I_L (50 Hz 690 V) [1]	kW	**75**	**90**	**110**	**132**	**160**	**200**
• At I_H (50 Hz 690 V) [1]	kW	55	75	90	110	132	160
• At I_L (50 Hz 500 V) [1]	kW	55	55	75	90	110	132
• At I_H (50 Hz 500 V) [1]	kW	45	55	75	90	90	110
• At I_L (60 Hz 575 V) [2]	hp	75	75	100	150	150	200
• At I_H (60 Hz 575 V) [2]	hp	75	75	100	125	150	200
Output current							
• Rated current $I_{N\,O}$	A	85	100	120	150	175	215
• Base-load current I_L [3]	A	80	95	115	142	170	208
• Base-load current I_H [4]	A	76	89	107	134	157	192
• Maximum current $I_{max\,O}$	A	120	142	172	213	255	312
DC link current							
• Rated current $I_{N\,DC}$ when supplied via							
- Basic/Smart Line Module	A	102	120	144	180	210	258
- Active Line Module	A	92	108	130	162	189	232
• Base-load current $I_{L\,DC}$ [3] when supplied via							
- Basic/Smart Line Module	A	99	117	140	175	204	251
- Active Line Module	A	89	105	126	157	184	226
• Base-load current $I_{H\,DC}$ [4] when supplied via							
- Basic/Smart Line Module	A	90	106	128	160	186	229
- Active Line Module	A	81	96	115	144	168	206
Current demand							
• 24 V DC auxiliary power supply	A	0.8	0.8	0.8	0.8	0.9	0.9
• 690 V AC	A	0.4	0.4	0.4	0.4	1.0	1.0
DC link capacitance	µF	1200	1200	1600	2800	2800	2800
Pulse frequency [5]							
• Rated frequency	kHz	1.25	1.25	1.25	1.25	1.25	1.25
• Pulse frequency, max.							
- Without current derating	kHz	1.25	1.25	1.25	1.25	1.25	1.25
- With current derating	kHz	7.5	7.5	7.5	7.5	7.5	7.5
Power loss, max. [6]							
• At 50 Hz 690 V	kW	1.17	1.43	1.89	1.8	2.67	3.09
• At 60 Hz 575 V	kW	1.1	1.3	1.77	1.62	2.5	2.91
Cooling air requirement	m^3/s (ft^3/s)	0.17 (6.00)	0.17 (6.00)	0.17 (6.00)	0.17 (6.00)	0.36 (12.7)	0.36 (12.7)
Sound pressure level L_{pA} (1 m) at 50/60 Hz	dB	67	67	67	67	69	69
Motor connection U2, V2, W2		M12 screws	M12 screws	M12 screws	M12 screws	M12 screws	M12 screws
• Conductor cross-section, max. (IEC)	mm^2	2 × 185	2 × 185	2 × 185	2 × 185	2 × 240	2 × 240
Cable length, max. [7]							
• Shielded	m (ft)	300 (984)	300 (984)	300 (984)	300 (984)	300 (984)	300 (984)
• Unshielded	m (ft)	450 (1476)	450 (1476)	450 (1476)	450 (1476)	450 (1476)	450 (1476)
PE/GND connection		PE bar	PE bar	PE bar	PE bar	PE bar	PE bar
• Busbar cross-section	mm^2	600	600	600	600	600	600
• Conductor cross-section, max. (IEC)	mm^2	240	240	240	240	240	240
Degree of protection		IP20	IP20	IP20	IP20	IP20	IP20
Dimensions							
• Width [8]	mm (in)	400 (15.75)	400 (15.75)	400 (15.75)	400 (15.75)	400 (15.75)	400 (15.75)
• Height [9]	mm (in)	2200 (86.61)	2200 (86.61)	2200 (86.61)	2200 (86.61)	2200 (86.61)	2200 (86.61)
• Depth	mm (in)	600 (23.62)	600 (23.62)	600 (23.62)	600 (23.62)	600 (23.62)	600 (23.62)
Weight, approx.	kg (lb)	145 (320)	145 (320)	145 (320)	145 (320)	286 (631)	286 (631)
Frame size		FX	FX	FX	FX	GX	GX
Rated short-circuit current according to IEC	kA	65	65	65	65	65	65

[1] Rated power of a typical 6-pole standard induction motor based on I_L or I_H for 500 V or 690 V 3 AC 50 Hz.

[2] Rated power of a typical 6-pole standard induction motor based on I_L or I_H for 575 V 3 AC 60 Hz.

[3] The base-load current I_L is based on a duty cycle of 110 % for 60 s or 150 % for 10 s with a duty cycle duration of 300 s.

[4] The base-load current I_H is based on a duty cycle of 150 % for 60 s or 160 % for 10 s with a duty cycle duration of 300 s.

[5] Information regarding the correlation between the pulse frequency and max. output current/output frequency is provided in the SINAMICS Low Voltage Engineering Manual.

[6] The specified power loss represents the maximum value at 100 % utilization. The value is lower under normal operating conditions.

[7] Total of all motor cables. Longer cable lengths for specific configurations are available on request. For additional information, please refer to the SINAMICS Low Voltage Engineering Manual.

[8] With option **L10** (dv/dt filter plus VPL):
- Frame sizes FX/GX/HX/JX: Additional cabinet 600 mm (23.62 in) wide.
With option **L34** (circuit breaker on the output side):
- Frame size FX/GX: Additional cabinet 400 mm (15.7 in) wide
- Frame size HX/JX: Additional cabinet 600 mm (23.62 in) wide.

[9] The cabinet height increases by 250 mm (9.84 in) with degree of protection IP21, and by 400 mm (15.7 in) with degrees of protection IP23, IP43 and IP54.

© Siemens 2024

Technical specifications

Line voltage 500 ... 690 V 3 AC DC link voltage 675 … 1035 V DC		Motor Modules in chassis format					
		6SL3720-1TG32-6AA3	6SL3720-1TG33-3AA3	6SL3720-1TG34-1AA3	6SL3720-1TG34-7AA3	6SL3720-1TG35-8AA3	6SL3720-1TG37-4AA3
Type rating							
• At I_L (50 Hz 690 V) [1]	kW	**250**	**315**	**400**	**450**	**560**	**710**
• At I_H (50 Hz 690 V) [1]	kW	200	250	315	400	450	630
• At I_L (50 Hz 500 V) [1]	kW	160	200	250	315	400	500
• At I_H (50 Hz 500 V) [1]	kW	132	160	200	250	315	450
• At I_L (60 Hz 575 V) [2]	hp	250	300	400	450	600	700
• At I_H (60 Hz 575 V) [2]	hp	200	250	350	450	500	700
Output current							
• Rated current $I_{N\,O}$	A	260	330	410	465	575	735
• Base-load current I_L [3]	A	250	320	400	452	560	710
• Base-load current I_H [4]	A	233	280	367	416	514	657
• Maximum current $I_{max\,O}$	A	375	480	600	678	840	1065
DC link current							
• Rated current $I_{N\,DC}$ when supplied via							
- Basic/Smart Line Module	A	312	396	492	558	690	882
- Active Line Module	A	281	356	443	502	621	794
• Base-load current $I_{L\,DC}$ [3] when supplied via							
- Basic/Smart Line Module	A	304	386	479	544	672	859
- Active Line Module	A	273	347	431	489	605	774
• Base-load current $I_{H\,DC}$ [4] when supplied via							
- Basic/Smart Line Module	A	277	352	437	496	614	784
- Active Line Module	A	250	316	394	446	552	706
Current demand							
• 24 V DC auxiliary power supply	A	0.9	0.9	1.0	1.0	1.0	1.25
• 690 V AC	A	1.0	1.0	2.1	2.1	2.1	3.1
DC link capacitance	µF	3900	4200	7400	7400	7400	11100
Pulse frequency [5]							
• Rated frequency	kHz	1.25	1.25	1.25	1.25	1.25	1.25
• Pulse frequency, max.							
- Without current derating	kHz	1.25	1.25	1.25	1.25	1.25	1.25
- With current derating	kHz	7.5	7.5	7.5	7.5	7.5	7.5
Power loss, max. [6]							
• At 50 Hz 690 V	kW	3.62	4.34	6.13	6.8	10.3	10.9
• At 60 Hz 575 V	kW	3.38	3.98	5.71	6.32	9.7	10.0
Cooling air requirement	m^3/s (ft^3/s)	0.36 (12.7)	0.36 (12.7)	0.78 (27.5)	0.78 (27.5)	0.78 (27.5)	1.08 (38.1)
Sound pressure level L_{pA} (1 m) at 50/60 Hz	dB	69	69	72	72	72	72
Motor connection U2, V2, W2		M12 screws	M12 screws	M12 screws	M12 screws	M12 screws	M12 screws
• Conductor cross-section, max. (IEC)	mm^2	2 × 240	2 × 240	4 × 240	4 × 240	4 × 240	6 × 240
Cable length, max. [7]							
• Shielded	m (ft)	300 (984)	300 (984)	300 (984)	300 (984)	300 (984)	300 (984)
• Unshielded	m (ft)	450 (1476)	450 (1476)	450 (1476)	450 (1476)	450 (1476)	450 (1476)
PE/GND connection		PE bar	PE bar	PE bar	PE bar	PE bar	PE bar
• Busbar cross-section	mm^2	600	600	600	600	600	600
• Conductor cross-section, max. (IEC)	mm^2	240	240	240	240	240	240
Degree of protection		IP20	IP20	IP20	IP20	IP20	IP20
Dimensions							
• Width [8]	mm (in)	400 (15.75)	400 (15.75)	600 (23.62)	600 (23.62)	600 (23.62)	800 (31.50)
• Height [9]	mm (in)	2200 (86.61)	2200 (86.61)	2200 (86.61)	2200 (86.61)	2200 (86.61)	2200 (86.61)
• Depth	mm (in)	600 (23.62)	600 (23.62)	600 (23.62)	600 (23.62)	600 (23.62)	600 (23.62)
Weight, approx.	kg (lb)	286 (631)	286 (631)	490 (1080)	490 (1080)	490 (1080)	700 (1544)
Frame size		GX	GX	HX	HX	HX	JX
Rated short-circuit current according to IEC	kA	65	65	65	84	84	100

[1] Rated power of a typical 6-pole standard induction motor based on I_L or I_H for 500 V or 690 V 3 AC 50 Hz.

[2] Rated power of a typical 6-pole standard induction motor based on I_L or I_H for 575 V 3 AC 60 Hz.

[3] The base-load current I_L is based on a duty cycle of 110 % for 60 s or 150 % for 10 s with a duty cycle duration of 300 s.

[4] The base-load current I_H is based on a duty cycle of 150 % for 60 s or 160 % for 10 s with a duty cycle duration of 300 s.

[5] Information regarding the correlation between the pulse frequency and max. output current/output frequency is provided in the SINAMICS Low Voltage Engineering Manual.

[6] The specified power loss represents the maximum value at 100 % utilization. The value is lower under normal operating conditions.

[7] Total of all motor cables. Longer cable lengths for specific configurations are available on request. For additional information, please refer to the SINAMICS Low Voltage Engineering Manual.

[8] With option **L10** (dv/dt filter plus VPL):
- Frame sizes FX/GX/HX/JX: Additional cabinet 600 mm (23.62 in) wide.
With option **L34** (circuit breaker on the output side):
- Frame size FX/GX: Additional cabinet 400 mm (15.7 in) wide
- Frame size HX/JX: Additional cabinet 600 mm (23.62 in) wide.

[9] The cabinet height increases by 250 mm (9.84 in) with degree of protection IP21, and by 400 mm (15.7 in) with degrees of protection IP23, IP43 and IP54.

© Siemens 2024

Technical specifications

Line voltage 500 ... 690 V 3 AC DC link voltage 675 … 1035 V DC		Motor Modules in chassis format			
		6SL3720-1TG38-1AA3	6SL3720-1TG38-8AA3	6SL3720-1TG41-0AA3	6SL3720-1TG41-3AA3
Type rating					
• At I_L (50 Hz 690 V) [1]	kW	**800**	**900**	**1000**	**1200**
• At I_H (50 Hz 690 V) [1]	kW	710	800	900	1000
• At I_L (50 Hz 500 V) [1]	kW	560	630	710	900
• At I_H (50 Hz 500 V) [1]	kW	500	560	630	800
• At I_L (60 Hz 575 V) [2]	hp	800	900	1000	1250
• At I_H (60 Hz 575 V) [2]	hp	700	800	900	1000
Output current					
• Rated current $I_{N\,O}$	A	810	910	1025	1270
• Base-load current I_L [3]	A	790	880	1000	1230
• Base-load current I_H [4]	A	724	814	917	1136
• Maximum current $I_{max\,O}$	A	1185	1320	1500	1845
DC link current					
• Rated current $I_{N\,DC}$ when supplied via					
- Basic/Smart Line Module	A	972	1092	1230	1524
- Active Line Module	A	875	983	1107	1372
• Base-load current $I_{L\,DC}$ [3] when supplied via					
- Basic/Smart Line Module	A	947	1064	1199	1485
- Active Line Module	A	853	958	1079	1337
• Base-load current $I_{H\,DC}$ [4] when supplied via					
- Basic/Smart Line Module	A	865	971	1094	1356
- Active Line Module	A	778	874	985	1221
Current demand					
• 24 V DC auxiliary power supply	A	1.25	1.4	1.4	1.4
• 690 V AC	A	3.1	3.1	3.1	3.1
DC link capacitance	µF	11100	14400	14400	19200
Pulse frequency [5]					
• Rated frequency	kHz	1.25	1.25	1.25	1.25
• Pulse frequency, max.					
- Without current derating	kHz	1.25	1.25	1.25	1.25
- With current derating	kHz	7.5	7.5	7.5	7.5
Power loss, max. [6]					
• At 50 Hz 690 V	kW	11.5	11.7	13.2	16.0
• At 60 Hz 575 V	kW	10.5	10.6	12.0	14.2
Cooling air requirement	m^3/s (ft^3/s)	1.08 (38.1)	1.08 (38.1)	1.08 (38.1)	1.08 (38.1)
Sound pressure level L_{pA} (1 m) at 50/60 Hz	dB	72	72	72	72
Motor connection U2, V2, W2		M12 screws	M12 screws	M12 screws	M12 screws
• Conductor cross-section, max. (IEC)	mm^2	6 x 240	6 x 240	6 x 240	6 x 240
Cable length, max. [7]					
• Shielded	m (ft)	300 (984)	300 (984)	300 (984)	300 (984)
• Unshielded	m (ft)	450 (1476)	450 (1476)	450 (1476)	450 (1476)
PE/GND connection		PE bar	PE bar	PE bar	PE bar
• Busbar cross-section	mm^2	600	600	600	600
• Conductor cross-section, max. (IEC)	mm^2	240	240	240	240
Degree of protection		IP20	IP20	IP20	IP20
Dimensions					
• Width [8]	mm (in)	800 (31.50)	800 (31.50)	800 (31.50)	800 (31.50)
• Height [9]	mm (in)	2200 (86.61)	2200 (86.61)	2200 (86.61)	2200 (86.61)
• Depth	mm (in)	600 (23.62)	600 (23.62)	600 (23.62)	600 (23.62)
Weight, approx.	kg (lb)	700 (1544)	700 (1544)	700 (1544)	700 (1544)
Frame size		JX	JX	JX	JX
Rated short-circuit current according to IEC	kA	100	100	100	100

[1] Rated power of a typical 6-pole standard induction motor based on I_L or I_H for 500 V or 690 V 3 AC 50 Hz.

[2] Rated power of a typical 6-pole standard induction motor based on I_L or I_H for 575 V 3 AC 60 Hz.

[3] The base-load current I_L is based on a duty cycle of 110 % for 60 s or 150 % for 10 s with a duty cycle duration of 300 s.

[4] The base-load current I_H is based on a duty cycle of 150 % for 60 s or 160 % for 10 s with a duty cycle duration of 300 s.

[5] Information regarding the correlation between the pulse frequency and max. output current/output frequency is provided in the SINAMICS Low Voltage Engineering Manual.

[6] The specified power loss represents the maximum value at 100 % utilization. The value is lower under normal operating conditions.

[7] Total of all motor cables. Longer cable lengths for specific configurations are available on request. For additional information, please refer to the SINAMICS Low Voltage Engineering Manual.

[8] With option **L10** (dv/dt filter plus VPL):
- Frame sizes FX/GX/HX/JX: Additional cabinet 600 mm (23.62 in) wide.
With option **L34** (circuit breaker on the output side):
- Frame size FX/GX: Additional cabinet 400 mm (15.7 in) wide
- Frame size HX/JX: Additional cabinet 600 mm (23.62 in) wide.

[9] The cabinet height increases by 250 mm (9.84 in) with degree of protection IP21, and by 400 mm (15.7 in) with degrees of protection IP23, IP43 and IP54.

© Siemens 2024

Overview

Central Braking Modules limit the DC link voltage at a central location in the drive line-up when the motors are operating in generator mode and energy recovery to the supply system is not possible. If, in regenerative mode, the voltage of the DC busbar exceeds a limit value, an externally installed braking resistor is switched in, thus restricting the voltage from increasing further. The regenerative energy is converted into heat. The braking resistor is switched in by the Braking Unit integrated in the Cabinet Module, which is equipped with state-of-the-art MOSFET/IGBT semiconductors.

Central Braking Modules are an alternative to the optional Braking Modules (options **L61/L62** or **L64/L65**) and are particularly suitable when high braking powers are required in a drive line-up. The required braking power can also be increased by connecting units in parallel.

Line voltage	DC link voltage	Braking power P_{150}
380 ... 480 V 3 AC	510 ... 720 V DC	500 kW/1000 kW
500 ... 600 V 3 AC	675 ... 900 V DC	550 kW/1100 kW
660 ... 690 V 3 AC	890 ... 1035 V DC	630 kW/1200 kW

The built-in fan means that Central Braking Modules are also suitable for high continuous power levels.

Design

The Central Braking Module is a cabinet unit with integrated braking chopper. Using state-of-the-art MOSFET/IGBT semiconductors, the power unit controls when the braking resistor is switched-in.

Central Braking Modules are designed as a 400 mm wide cabinet module. Its connection to the DC link is protected by fuses.

Central Braking Modules require braking resistors that must be externally mounted and which can be ordered separately. The cables to the resistors can be connected to lugs which are specially prepared for plant application and which are located in the connection area of the cabinet.

The power units have diagnostics LEDs for the display of faults and also a control output for the communication of faults. The Central Braking Module can be disabled externally via a control input.

The arrangement in the DC link system is subject to specific configuring rules.
For additional information, please refer to the SINAMICS Low Voltage Engineering Manual.

Selection and ordering data

Braking powers				**Central Braking Module**
P_{15}	P_{150}	P_{270}	P_{DB}	
kW	kW	kW	kW	Article No.
DC link voltage 510 ... 720 V DC				
730	500	300	200	**6SL3700-1AE35-0AA3**
1380	1000	580	370	**6SL3700-1AE41-0AA3**
DC link voltage 675 ... 900 V DC				
830	550	340	220	**6SL3700-1AF35-5AA3**
1580	1100	650	420	**6SL3700-1AF41-1AA3**
DC link voltage 890 ... 1035 V DC				
920	630	380	240	**6SL3700-1AH36-3AA3**
1700	1200	720	460	**6SL3700-1AH41-2AA3**

Note:

In contrast to the optional Braking Modules (options **L61**, **L62** or **L64**, **L65**), the braking resistors for the Central Braking Modules must be ordered separately.

Braking power P_{150}	Dimensions (W × D × H)	**Braking resistor in degree of protection IP21**
kW	mm (in)	Article No.
DC link voltage 510 ... 720 V DC		
500	960 × 620 × 790 (37.80 × 24.41 × 31.10)	**6SL3000-1BE35-0AA0**
1000	960 × 620 × 1430 (37.80 × 24.41 × 56.30)	**6SL3000-1BE41-0AA0**
DC link voltage 675 ... 900 V DC		
550	960 × 620 × 1110 (37.80 × 24.41 × 43.70)	**6SL3000-1BF35-5AA0**
1100	960 × 620 × 1430 (37.80 × 24.41 × 56.30)	**6SL3000-1BF41-1AA0**
DC link voltage 890 ... 1035 V DC		
630	960 × 620 × 1110 (37.80 × 24.41 × 43.70)	**6SL3000-1BH36-3AA0**
1200	960 × 620 × 1430 (37.80 × 24.41 × 56.30)	**6SL3000-1BH41-2AA0**

© Siemens 2024

Integration

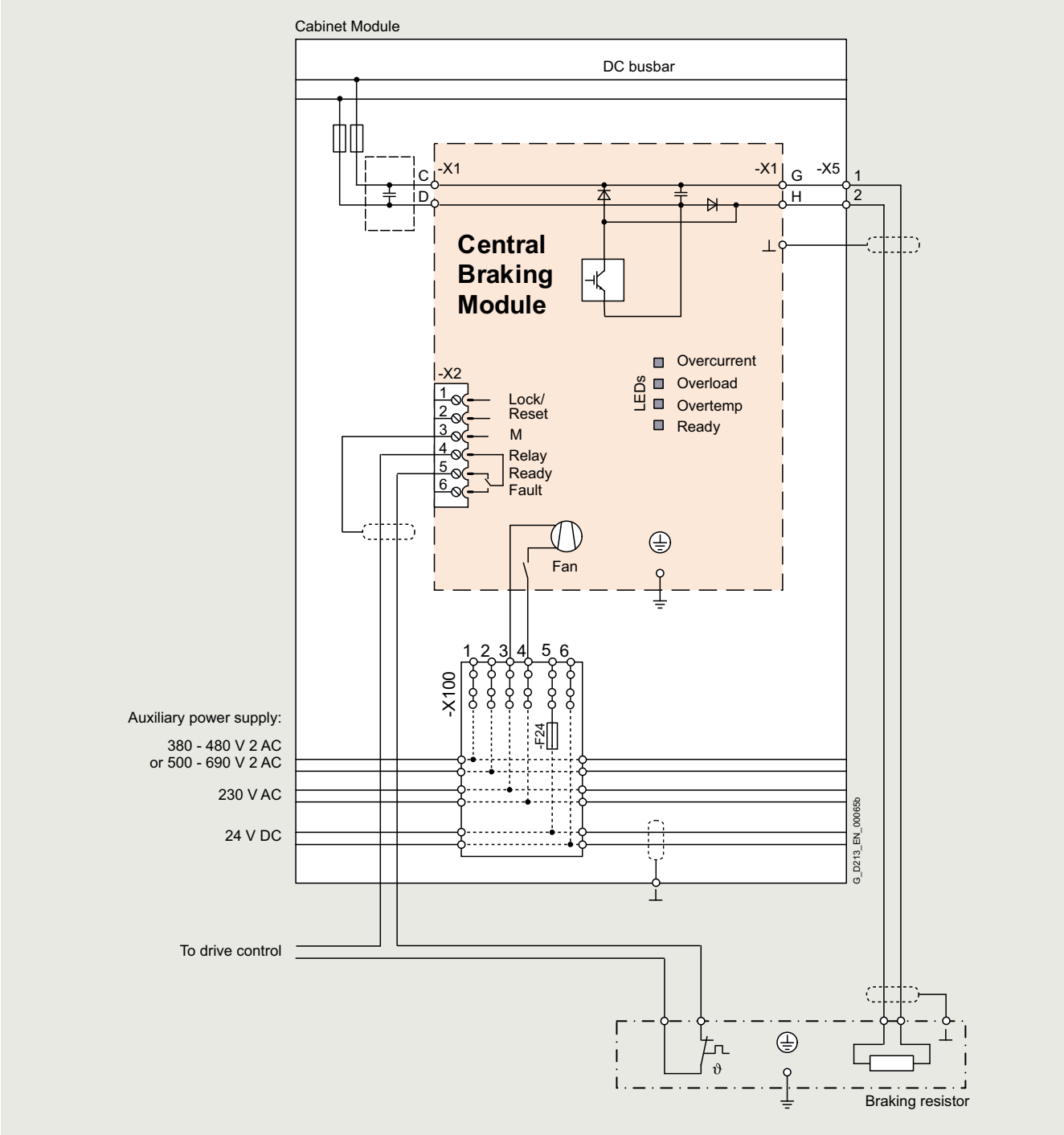

Connection example of a Central Braking Module

© Siemens 2024

Technical specifications

		Central Braking Modules					
		6SL3700-1AE35-0AA3	6SL3700-1AE41-0AA3	6SL3700-1AF35-5AA3	6SL3700-1AF41-1AA3	6SL3700-1AH36-3AA3	6SL3700-1AH41-2AA3
Line voltage		**380 ... 480 V**		**500 ... 600 V**		**660 ... 690 V**	
Braking power P_{150}	kW	500	1000	550	1100	630	1200
Continuous braking power P_{DB}	kW	200	370	220	420	240	460
Braking current for P_{150}	A	650	1200	580	1100	520	1000
Current demand [1]							
• 230 V 2 AC	A	0.4	0.4	0.4	0.4	0.4	0.4
Power loss, max. [2] At 50 Hz 400/500/690 V	kW	0.8	1.5	0.8	1.5	0.8	1.5
DC link capacitance	µF	8160	9720	7640	8680	7640	8680
Cooling air requirement	m^3/s (ft^3/s)	0.14 (4.94)	0.14 (4.94)	0.14 (4.94)	0.14 (4.94)	0.14 (4.94)	0.14 (4.94)
Sound pressure level L_{pA} (1 m) at 50/60 Hz	dB	55	55	55	55	55	55
Braking resistor connection		M12 screws	M12 screws	M12 screws	M12 screws	M12 screws	M12 screws
• Conductor cross-section, max. (IEC)	mm^2	2 × 240	2 × 240	2 × 240	2 × 240	2 × 240	2 × 240
PE/GND connection		PE bar	PE bar	PE bar	PE bar	PE bar	PE bar
• Busbar cross-section	mm^2	600	600	600	600	600	600
• Conductor cross-section, max. (IEC)	mm^2	240	240	240	240	240	240
Degree of protection		IP20	IP20	IP20	IP20	IP20	IP20
Dimensions							
• Width	mm (in)	400 (15.75)	400 (15.75)	400 (15.75)	400 (15.75)	400 (15.75)	400 (15.75)
• Height [3]	mm (in)	2200 (86.61)	2200 (86.61)	2200 (86.61)	2200 (86.61)	2200 (86.61)	2200 (86.61)
• Depth	mm (in)	600 (23.62)	600 (23.62)	600 (23.62)	600 (23.62)	600 (23.62)	600 (23.62)
Weight, approx.	kg (lb)	230 (507)	230 (507)	230 (507)	230 (507)	230 (507)	230 (507)
Frame size	mm (in)	400 (15.75)	400 (15.75)	400 (15.75)	400 (15.75)	400 (15.75)	400 (15.75)

		Braking resistors					
		6SL3000-1BE35-0AA0	6SL3000-1BE41-0AA0	6SL3000-1BF35-5AA0	6SL3000-1BF41-1AA0	6SL3000-1BH36-3AA0	6SL3000-1BH41-2AA0
Line voltage		**380 ... 480 V**		**500 ... 600 V**		**660 ... 690 V**	
Braking power P_{BR}	kW	500	1000	550	1100	630	1200
Continuous braking power P_{DB}	kW	23	58	34	62	42	75
Resistance value	Ω	0.95	0.49	1.35	0.69	1.8	0.95
Degree of protection		IP21	IP21	IP21	IP21	IP21	IP21
Dimensions							
• Width	mm (in)	960 (37.80)	960 (37.80)	960 (37.80)	960 (37.80)	960 (37.80)	960 (37.80)
• Height	mm (in)	620 (24.41)	620 (24.41)	620 (24.41)	620 (24.41)	620 (24.41)	620 (24.41)
• Depth	mm (in)	790 (31.10)	1430 (56.30)	1110 (43.70)	1430 (56.30)	1110 (43.70)	1430 (56.30)
Weight, approx.	kg (lb)	82 (181)	170 (375)	110 (243)	180 (397)	124 (273)	196 (432)

[1] Current demand of the fans.

[2] The specified power loss represents the maximum value at 100 % utilization. The value is lower under normal operating conditions.

[3] The cabinet height increases by 250 mm (9.84 in) with degree of protection IP21, and by 400 mm (15.7 in) with degrees of protection IP23, IP43 and IP54.

© Siemens 2024

Characteristic curves

Central Braking Modules are dimensioned for braking powers with the following duty cycles:

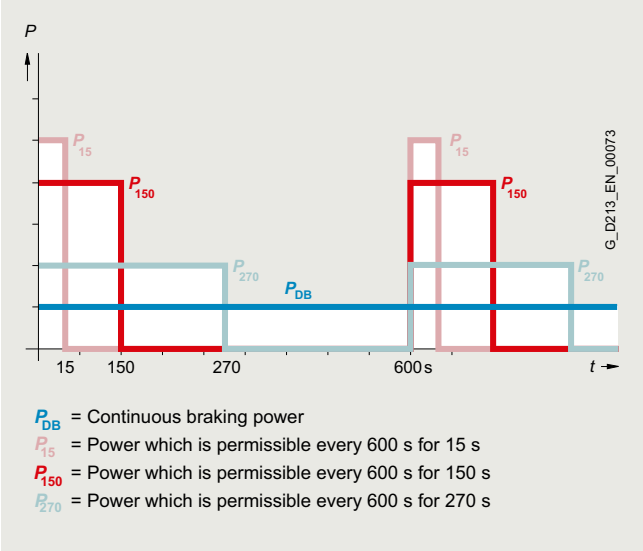

Braking powers of the Central Braking Modules

The braking powers are subject to a cycle time of 600 s. P_{150} is assumed to be the rated braking power. The braking resistors can be assigned according to these power ratings.

In most applications, Central Braking Modules are only used for occasional braking operations, e.g. stopping a drive in an emergency. Low-cost braking resistors in degree of protection IP21 are specifically offered for these types of applications; these braking resistors are dimensioned for braking powers P_{BR} with the following duty cycle:

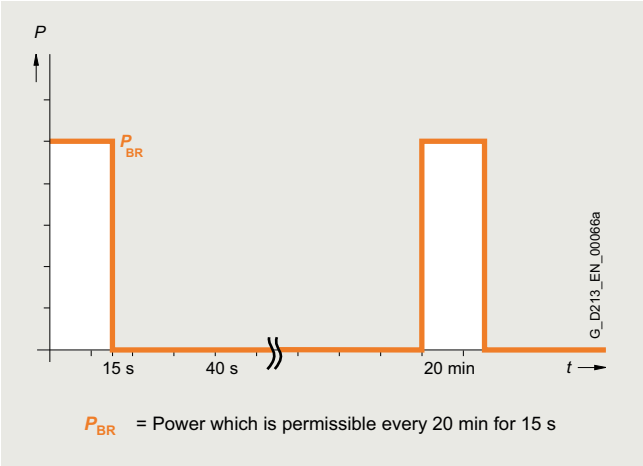

Duty cycle for braking resistors

Braking resistors with a higher braking power and shorter cycle times are available on request.

© Siemens 2024

Overview

Auxiliary Power Supply Modules supply the auxiliary power supply system for the SINAMICS S120 Cabinet Modules. Units connected to this auxiliary power supply system include the fans of the SINAMICS S120 devices installed in the Cabinet Modules. In addition, the auxiliary power supply system supplies the electronic modules with an external voltage of 24 V DC. This is required when the DC link is not charged, for instance, in order to maintain PROFIBUS/PROFINET communication.

Design

The Auxiliary Power Supply Module is connected in the customer's plant to a voltage corresponding to the respective rated unit voltage.

The standard version contains the following components:

- Fuse switch disconnector with fuse monitoring for external evaluation
- Supply of the auxiliary power supply system with 3 fused auxiliary voltages:
  - 24 V DC for the electronics power supply
  - 230 V 2 AC to supply 230 V loads
  - 380 V to 690 V 2 AC to supply the equipment fans
- Transformer with 230 V output voltage
- SITOP 24 V DC power supply
- 6-pole auxiliary power supply system (ready-wired), including connections for looping through to the next Cabinet Module
- Nickel-plated PE busbar (60 mm × 10 mm), including jumper for looping through to the next Cabinet Module

Selection and ordering data

System-side power supply (380 ... 690 V 3 AC) A	**Auxiliary Power Supply Module** Article No.
125	**6SL3700-0MX14-0AA3**
160	**6SL3700-0MX16-3AA3**
200	**6SL3700-0MX21-0AA3**
250	**6SL3700-0MX21-4AA3**

Note:

In smaller systems, there is often no need for an additional Cabinet Module for the auxiliary power supply. In such cases, the infeed for the auxiliary power supply system can also be supplied by the Line Connection Module. This must then be ordered separately (option **K76**).

© Siemens 2024

Integration

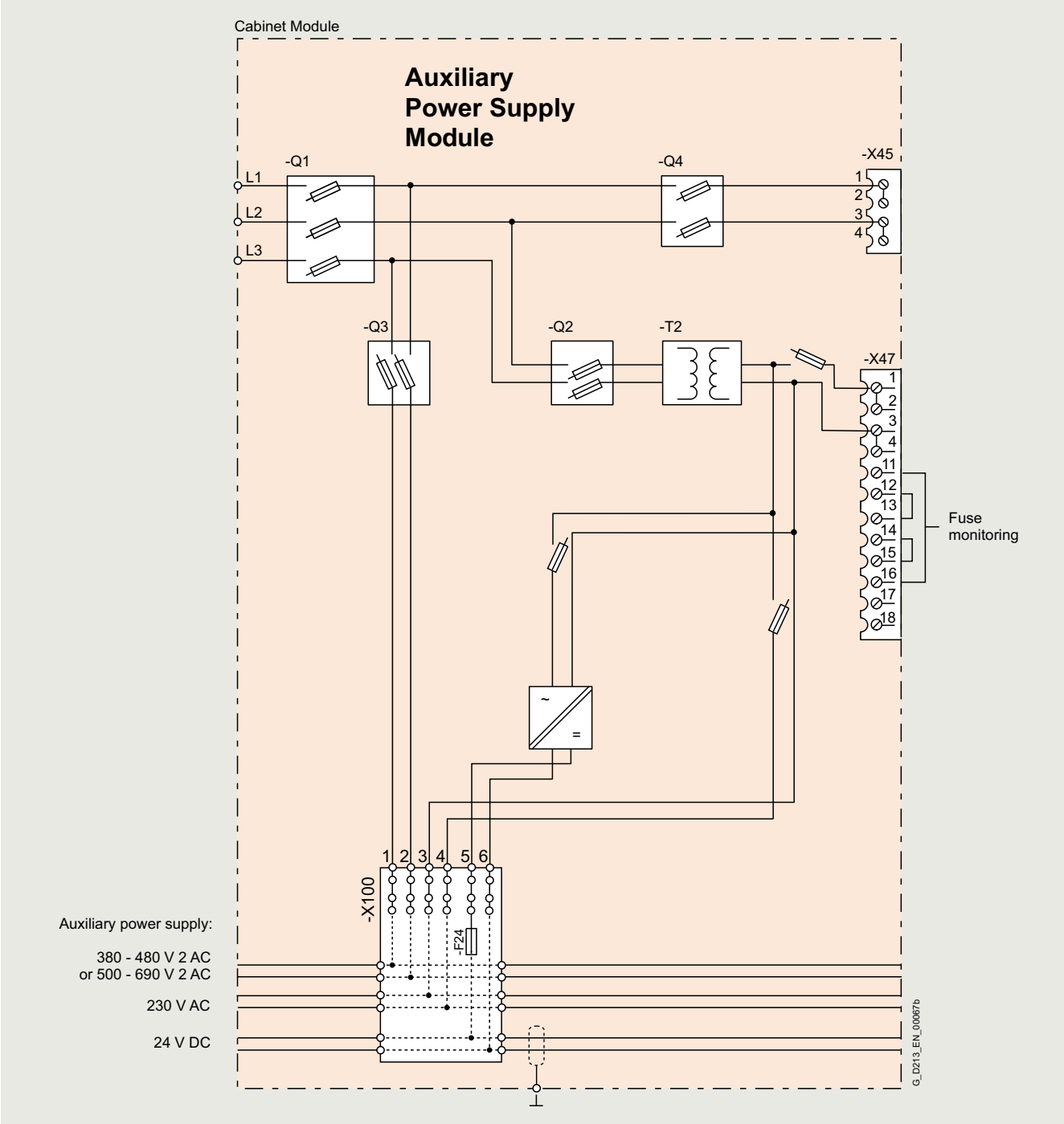

Connection example of an Auxiliary Power Supply Module

© Siemens 2024

Technical specifications

		Auxiliary Power Supply Modules			
		6SL3700-0MX14-0AA3	6SL3700-0MX16-3AA3	6SL3700-0MX21-0AA3	6SL3700-0MX21-4AA3
Plant-side power supply 380 ... 690 V 3 AC	A	**125**	**160**	**200**	**250**
Line supply connection					
• Conductor cross-section, max. (IEC)	mm^2	150	150	150	150
Max. current carrying capacity					
• Load connection 380 V ... 690 V 2 AC					
- To auxiliary power supply	A	63	80	100	100
- To customer terminal -X45	A	50	63	80	80
• Load connection 230 V 2 AC					
- To auxiliary power supply	A	6	10	10	20
- To customer terminal -X47	A	8	10	10	20
• Load connection 24 V DC					
- To auxiliary power supply	A	20	40	80	80
Cable cross-section, max.					
• Connection -X45	mm^2	16	16	16	16
• Connection -X47	mm^2	2.5	2.5	2.5	2.5
Cooling air requirement	m^3/s (ft^3/s)	Natural convection	Natural convection	Natural convection	Natural convection
PE/GND connection		PE bar	PE bar	PE bar	PE bar
• Busbar cross-section	mm^2	600	600	600	600
• Conductor cross-section, max. (IEC)	mm^2	240	240	240	240
Degree of protection		IP20	IP20	IP20	IP20
Dimensions					
• Width	mm (in)	600 (23.62)	600 (23.62)	600 (23.62)	600 (23.62)
• Height [1]	mm (in)	2200 (86.61)	2200 (86.61)	2200 (86.61)	2200 (86.61)
• Depth	mm (in)	600 (23.62)	600 (23.62)	600 (23.62)	600 (23.62)
Weight, approx.	kg (lb)	170 (375)	180 (397)	210 (463)	240 (529)
Minimum short-circuit current [2]	A	3200	4000	5000	7000

[1] The cabinet height increases by 250 mm (9.84 in) with degree of protection IP21, and by 400 mm (15.7 in) with degrees of protection IP23, IP43 and IP54.

[2] Current required to ensure reliable tripping of installed protective devices.

© Siemens 2024

Customer terminal strip -X55

Overview

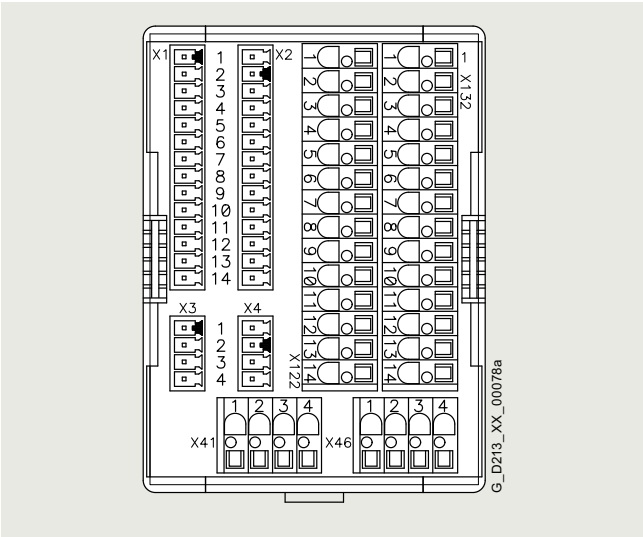

Customer terminal strip -X55 is the interface with the I/O devices and marshals a range of cabinet-internal signals to a central terminal strip module mounted in the lower part of the cabinet.

It can be used for Motor Modules in the chassis format as well as together with options **K90** (Control Unit CU320-2 DP) or **K95** (Control Unit CU320-2 PN) for Basic Line Modules, Smart Line Modules, Active Line Modules and Booksize Cabinet Kits.

Design

To connect signal cables on the customer side, terminal strip -X55 includes terminals -X122, -X132, -X41 and -X46 (terminals -X1 to -X4 are used inside the cabinet and are not available). As a consequence, depending on the version (with/without option **K90**) the following digital inputs/outputs and/or signals are available:

The customer terminal strip -X55 includes:	Motor Modules in chassis format		**Line Modules**	
	Without	With	Without	With
	CU320-2 (**K90/K95**)		CU320-2 (**K90/K95**)	
-X122, -X132				
12 digital inputs DI	–	✓	–	✓
8 bidirectional inputs/outputs (DI/DO)	–	✓	–	✓
-X41				
Connection safety function Safe Torque Off / Safe Stop 1	✓	✓	– [1]	– [1]
Connection temperature sensor KTY84-1C130/ PTC/Pt100/Pt1000	✓	✓	– [1]	– [1]
-X46				
Connection Safe Brake Adapter	✓	✓	–	–

[1] For Booksize Cabinet Kits, a connection is provided at the separate customer terminal strip -X55.1.

© Siemens 2024

Design

Pin assignment

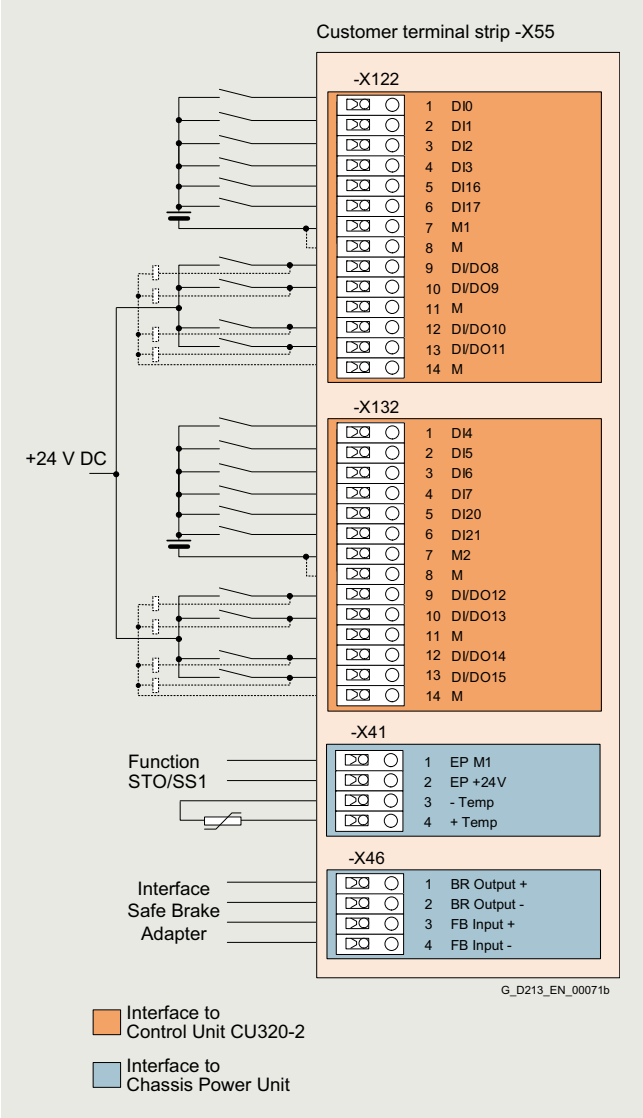

Terminal assignment of customer terminal strip -X55

Terminal strip -X55-X122 digital inputs/outputs

Terminal	Designation [1]	Technical data
1	DI 0	Voltage -30 V to +30 V DC Current consumption, typical: 9 mA at 24 V DC Galvanic isolation: The reference potential is terminal M1 Level (incl. ripple): High level: 15 V ... 30 V Low level: -30 V ... +5 V Input delay (typ.): at 0 → 1: 50 µs at 1 → 0: 150 µs
2	DI 1	
3	DI 2	
4	DI 3	
5	DI 16	
6	DI 17	
7	M1	Reference potential for terminals 1 to 6
8	M	Ground
9	DI/DO 8	As input: Voltage -30 V ... +30 V DC Current consumption, typical: 9 mA at 24 V DC Level (incl. ripple): High level: 15 V ... 30 V Low level: -30 V ... +5 V Fast inputs: [2] DI/DO 8, 9, 10 and 11 Input delay (typ.): at 0 → 1: 5 µs at 1 → 0: 50 µs As output: Voltage 24 V DC Max. load current per output: 500 mA Continuously short-circuit proof Output delay (typ./max.): [3] at 0 → 1: 150 µs/400 µs at 1 → 0: 75 µs/100 µs Switching frequency: For resistive load: max. 100 Hz For inductive load: max. 0.5 Hz For lamp load: max. 10 Hz Max. lamp load: 5 W
10	DI/DO 9	
11	M	
12	DI/DO 10	
13	DI/DO 11	
14	M	

Max. connectable cross-section: 2.5 mm^2

[1] DI: Digital input
DI/DO: Bidirectional digital input/output
M: Electronics ground
M1: Reference ground.

[2] Can be used as measuring probe input or input for the external zero mark.

[3] Data for: U_{cc} = 24 V; load 48 Ω; High (1) = 90 % U_{out};
Low (0) = 10 % U_{out}.

© Siemens 2024

Design

Terminal strip -X55-X132 digital inputs/outputs

Terminal	Designation [1]	Technical data
1	DI 4	Voltage -30 V to +30 V DC Current consumption, typical: 9 mA at 24 V DC Galvanic isolation: The reference potential is terminal M2 Level (incl. ripple): High level: 15 V ... 30 V Low level: -30 V ... +5 V Input delay (typ.): at 0 → 1: 50 µs at 1 → 0: 150 µs
2	DI 5	
3	DI 6	
4	DI 7	
5	DI 20	
6	DI 21	
7	M2	Reference potential for terminals 1 to 6
8	M	Ground
9	DI/DO 12	As input: Voltage -30 V ... +30 V DC Current consumption, typical: 9 mA at 24 V DC Level (incl. ripple): High level: 15 V ... 30 V Low level: -30 V ... +5 V Fast inputs: [2] DI/DO 12, 13, 14 and 15 Input delay (typ.): at 0 → 1: 5 µs at 1 → 0: 50 µs As output: Voltage 24 V DC Max. load current per output: 500 mA Continuously short-circuit proof Output delay (typ./max.): [3] at 0 → 1: 150 µs/400 µs at 1 → 0: 75 µs/100 µs Switching frequency: For resistive load: max. 100 Hz For inductive load: max. 0.5 Hz For lamp load: max. 10 Hz Max. lamp load: 5 W
10	DI/DO 13	
11	M	
12	DI/DO 14	
13	DI/DO 15	
14	M	

Max. connectable cross-section: 2.5 mm^2

Terminal strip -X55-X41 temperature sensor connection

Terminal	Function	Technical data
1	EP M1 (enable pulses)	Supply voltage 24 V DC (20.4 ... 28.8 V DC) Current consumption: 10 mA Signal propagation times: L → H: 100 µs H → L: 1000 µs The pulse inhibit function is only available when Safety Integrated Basic Functions are enabled
2	EP +24 V (enable pulses)	
3	-Temp	Temperature sensor connection for motor temperature sensing: KTY84-1C130, PTC, Pt100, Pt1000
4	+Temp	

Max. connectable cross-section: 2.5 mm^2

Terminal strip -X55-X46 brake control and monitoring

Terminal	Function	Technical data
1	BR output +	The interface is used to connect the Safe Brake Adapter
2	BR output -	
3	FB input +	
4	FB input -	

Max. connectable cross-section: 2.5 mm^2

[1] DI: Digital input
DI/DO: Bidirectional digital input/output
M: Electronics ground
M2: Reference ground.

[2] Can be used as measuring probe input or input for the external zero mark.

[3] Data for: U_{cc} = 24 V; load 48 Ω; High (1) = 90 % U_{out}; Low (0) = 10 % U_{out}.

© Siemens 2024

Overview

To comply with high requirements regarding installation and ambient conditions, SINAMICS S120 Cabinet Modules are also available in a liquid-cooled version.

The power loss of the units is transferred to the cooling liquid and dissipated, without noticeably increasing the temperature of the surrounding environment. As a consequence it is possible to save the expense of controlling the climate of the electrical room.

The system consists of liquid-cooled Basic Line Connection Modules, Active Line Connection Modules, Motor Modules, an Auxiliary Power Supply Module, and a suitably selected cooling unit (Heat Exchanger Module).

Basic Line Connection Modules

Basic Line Connection Modules comprise a Line Connection Module and a liquid-cooled Basic Line Module. Basic Line Connection Modules are only suitable for infeed operation, i.e. they are not capable of feeding regenerative energy back into the supply system.

If regenerative energy is produced, e.g. when the drives brake, it must be converted into heat in external braking resistors using a supplementary Motor Module, which is used as Braking Module.

When a Basic Line Connection Module is used as the infeed, a line reactor appropriate for the supply conditions must be installed. If the infeed is realized via a transformer with an appropriate rating in 6-pulse operation with a Basic Line Connection Module or in 12-pulse operation with two Basic Line Connection Modules, the line reactor is optional and can be omitted.

If two or more Basic Line Connection Modules are operated in parallel on a common supply system in order to increase power, then line reactors must also be used.

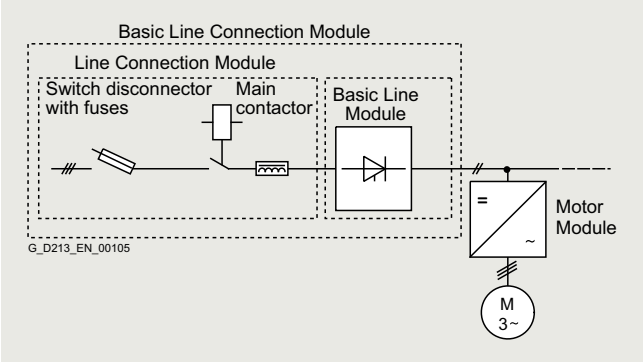

Basic Line Connection Module ≤ 800 A

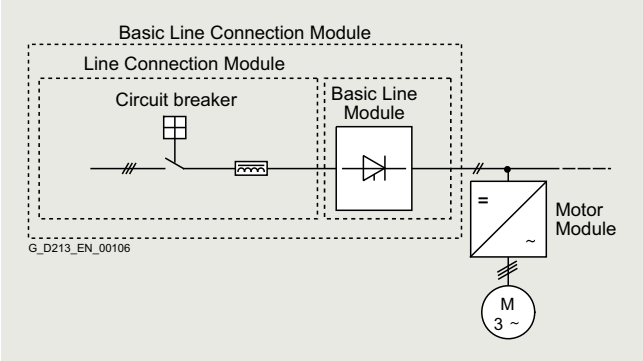

Basic Line Connection Module > 800 A

© Siemens 2024

Overview

Active Line Connection Modules

Active Line Connection Modules comprise a Line Connection Module, a liquid-cooled Active Interface Module and a liquid-cooled Active Line Module. Active Line Connection Modules can supply energy to the DC link and return regenerative energy to the line supply (energy recovery). The use of an additional Motor Module as a Braking Module is only required if the drives need to be decelerated in a controlled manner after a power failure (i.e. when energy cannot be fed back into the line supply).

In contrast to Basic Line Connection Modules, Active Line Connection Modules generate a regulated DC voltage which remains constant irrespective of fluctuations in the line voltage. However, in this case, the line voltage must remain within the permissible tolerance range. Active Line Connection Modules draw a virtually sinusoidal current from the supply system. Almost no harmonics occur. The total harmonic distortion factors of the current THD(I) and voltage THD(U) are typically in the range of approx. 3 % for rated current. THD(I) is calculated according to IEEE 519 (2014) and THD(U) according to IEC 61000-2-4 (2002). The stringent limit values of IEEE 519 (2014) are typically complied with.

Active Line Connection Modules always contain an Active Interface Module, which in addition to a Clean Power Filter, also includes the necessary pre-charging circuit for the Active Line Module.

Active Line Connection Modules compact

Active Line Connection Modules compact comprise a liquid-cooled Active Interface Module and a liquid-cooled Active Line Module. They can supply motoring energy to the DC link and return regenerative energy to the line supply. The line-side infeed via main switch with fuse switch disconnector or circuit breaker must be done on the plant side.

In contrast to Basic Line Connection Modules, Active Line Connection Modules compact generate a regulated DC voltage which remains constant irrespective of fluctuations in the line voltage. However, in this case, the line voltage must remain within the permissible tolerance range. Active Line Connection Modules compact draw a virtually sinusoidal current from the supply system. Almost no harmonics occur. The total harmonic distortion factors of the current THD(I) and voltage THD(U) are typically in the range of approx. 3 % for rated current. THD(I) is calculated according to IEEE 519 (2014) and THD(U) according to IEC 61000-2-4 (2002). The stringent limit values of IEEE 519 (2014) are typically complied with.
The line-side infeed via main circuit breaker with fuse switch disconnector or circuit breaker must be carried out on the plant side.

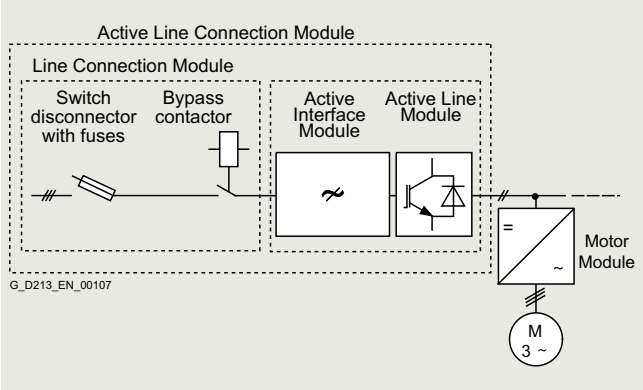

Active Line Connection Module with Active Interface Module and Active Line Module ≤800 A

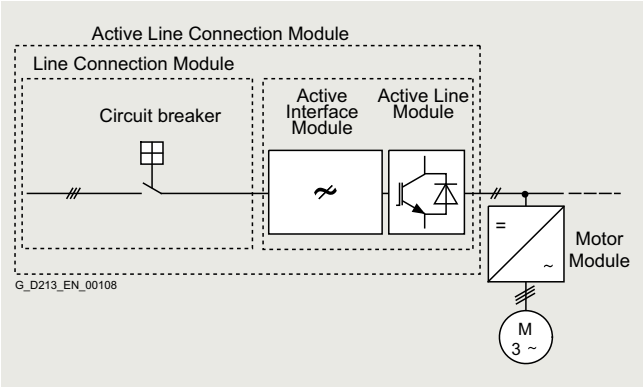

Active Line Connection Module with Active Interface Module and Active Line Module >800 A

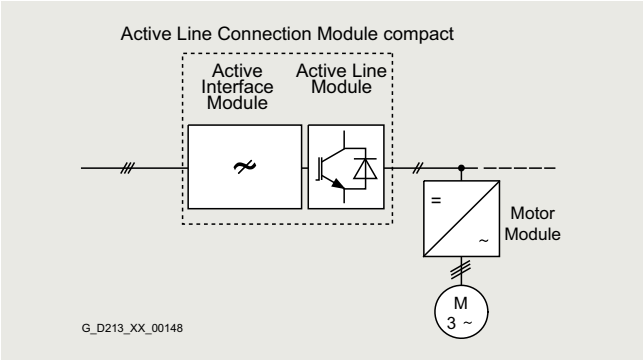

Active Line Connection Module compact with Active Interface Module and Active Line Module

© Siemens 2024

Overview

Motor Modules

Each Cabinet Module is fitted with one SINAMICS S120 Motor Module in chassis format and covers the power range from 90 kW to 1500 kW (380 V to 480 V or 500 V to 690 V). The power rating can be extended up to approx. 5700 kW by connection in parallel.

The Motor Modules can also be used as Braking Modules (braking chopper) if a 3-phase braking resistor is connected instead of a motor.
Further information can be found in the SINAMICS Low Voltage Engineering Manual.

Motor Modules compact

Each Cabinet Module compact is fitted with one SINAMICS S120 Motor Module in chassis format and covers the power range from 90 kW to 1500 kW (380 V to 480 V or 500 V to 690 V). The power rating can be extended up to approx. 5700 kW by connection in parallel.

The Motor Modules compact can also be used as Braking Modules (braking chopper) if a 3-phase braking resistor is connected instead of a motor.
Further information can be found in the SINAMICS Low Voltage Engineering Manual.

Auxiliary Power Supply Modules

Auxiliary Power Supply Modules supply power to the auxiliary power supply system of the SINAMICS S120 Cabinet Modules. The heat exchangers, which are installed in the SINAMICS S120 Cabinet Modules with degree of protection IP55, are one of the connections to the auxiliary power supply system. In addition, the auxiliary power supply system supplies the electronic modules with an external 24 V DC voltage. This is required when the DC link is not charged, for instance, in order to maintain PROFIBUS or PROFINET communication.

The installation is analogous to the air-cooled Auxiliary Power Supply Modules with an additional water pipe system.

The Auxiliary Power Supply Modules provide an expansion to the option **K76** (auxiliary voltage generating unit) if higher power ratings are required.

Heat Exchanger Modules

Heat Exchanger Modules are used to dissipate the power loss from the converter. They comprise a deionized water circuit on the converter side and a raw water circuit on the plant side.

The hot deionized water in the circuit on the converter side passes through a low-maintenance circulating pump(s) into the water/water plate-type heat exchanger. This is made of stainless steel and connected to the raw water circuit on the plant side. The deionized water is cooled there by the raw water of the outer circuit and flows back into the drive.

© Siemens 2024

Technical specifications

General technical specifications

Electrical specifications	
Line voltages	380 ... 480 V 3 AC, ±10 % (-15 % <1 min) 500 … 690 V 3 AC, ±10 % (-15 % <1 min)
Line supply types	Grounded TN/TT systems and non-grounded IT systems
Line frequency	47 ... 63 Hz
Output frequency [1)] • Control mode Servo • Control mode Vector • Control mode V/f	 0 ... 550 Hz 0 ... 550 Hz 0 ... 550 Hz
Line power factor Fundamental • Basic Line Module • Active Line Module	 >0.96 Adjustable (factory-set to cos φ = 1)
Efficiency • Basic Line Module • Active Line Module • Motor Module	 >99 % >97.5 % (including Active Interface Module) >98.5 %
Overvoltage category	III acc. to EN 61800-5-1
Control method	Vector/Servo control with and without encoder or V/f control
Fixed speeds	15 fixed speeds plus 1 minimum speed, parameterizable (in the default setting, 3 fixed setpoints plus 1 minimum speed are selectable using terminal strip/PROFIBUS/PROFINET)
Skippable speed ranges	4, parameterizable
Setpoint resolution	0.001 r/min digital (14 bits + sign) 12 bits analog
Braking operation	With Active Line Modules, four-quadrant operation as standard (energy recovery). With Basic Line Modules, two-quadrant operation as standard, braking by means of a Motor Module.
Cabinet system	
Cabinet system	Rittal TS 8, doors with double-barb lock, base plate with cable entry options
Paint finish	RAL 7035 (indoor requirements)
Mechanical specifications	
Degree of protection	IP21 (higher degrees of protection up to IP55 optional)
Protection class	I acc. to EN 61800-5-1
Touch protection	EN 50274/DGUV regulation 3 when used as intended
Cooling method	Cooling in compliance with EN 60146: Basic Line Connection Modules, Active Line Connection Modules, Motor Modules: WE - W: Liquid cooling - E: Forced air cooling, drive device outside the equipment Line reactors, motor reactors, dv/dt filters with Voltage Peak Limiter: AN - A: Air cooling - N: Natural cooling (convection)

[1)] Higher output frequencies available on request.

© Siemens 2024

Technical specifications

Ambient conditions	Storage [1]	Transport [1]	Operation
Ambient temperature	-25 ... +55 °C (-13 ... 131 °F)	-25 ... +70 °C (-13 ... +158 °F) from -40 °C (-40 °F) for 24 hours	0 ... +45 °C (32 ... 113°F) to +50 °C (122 °F) see derating data
Relative humidity (condensation not permissible)	5 ... 95 % Class 1K4 acc. to IEC 60721-3-1 (1997)	5 ... 95 % at 40 °C (104 °F) Class 2K3 acc. to IEC 60721-3-2 (1997)	5 ... 95 % Class 3K3 acc. to IEC 60721-3-3 (2002)
Environmental class/harmful chemical substances	Class 1C2 acc. to EN 60721-3-1 (1997)	Class 2C2 acc. to EN 60721-3-2 (1997)	Class 3C2 acc. to EN 60721-3-3 (2002)
Organic/biological influences	Class 1B1 acc. to EN 60721-3-1 (1997)	Class 2B1 acc. to EN 60721-3-2 (1997)	Class 3B1 acc. to EN 60721-3-3 (2002)
Mechanically active substances	Class 1S1 acc. to EN 60721-3-1 (1997)	Class 2S1 acc. to EN 60721-3-2 (1997)	Class 3S1 acc. to EN 60721-3-3 (2002)
Degree of pollution	2 acc. to IEC/EN 61800-5-1		
Installation altitude	≤ 2000 m (6562 ft) above sea level without derating; > 2000 m (6562 ft) see derating data		
Mechanical stability	**Storage [1]**	**Transport [1]**	**Operation**
Vibratory load	Class 1M2 acc. to EN 60721-3-1 (1997)	Class 2M2 acc. to EN 60721-3-2 (1997)	–
• Deflection	1.5 mm (0.06 in) at 5 ... 9 Hz	3.1 mm (0.12 in) at 5 ... 9 Hz	0.075 mm (0.003 in) at 10 ... 58 Hz
• Acceleration	5 m/s² (16.4 ft/s²) at >9 ... 200 Hz	10 m/s² (32.8 ft/s²) at >9 ... 200 Hz	9.8 m/s² (32.2 ft/s²) at >58 ... 200 Hz
Shock load	Class 1M2 acc. to EN 60721-3-1 (1997)	Class 2M2 acc. to EN 60721-3-2 (1997)	Class 3M1 acc. to EN 60721-3-3 (2002)
• Acceleration	40 m/s² (131 ft/s²) at 22 ms	100 m/s² (328 ft/s²) at 11 ms	Test values acc. to EN 60068-2-27 test Ea: 5 g, 30 ms, 3 shocks
Compliance with standards			
Conformances/certificates of suitability, according to	CE (EMC Directive 2014/30/EU, Low Voltage Directive 2014/35/EU, and Machinery Directive 2006/42/EC for functional safety) RCM, RoHS II, UKCA, marine certification DNV, ABS, CCS (Type approval, only in combination with the Option **M66**) Green Passport: Option B50 creates a form for the material declaration according to Green Passport.		
Radio interference suppression	SINAMICS converter systems are not designed for connection to the public grid (first environment). Radio interference suppression is compliant with the EMC product standard for variable-speed drives EN 61800-3, "Second environment" (industrial networks). EMC disturbances can occur when connected to the public grid.		

Deviations from the specified class are underlined.

[1] In transport packaging.

© Siemens 2024

Technical specifications

Cooling circuit and coolant quality

The following tables and sections describe the coolant quality requirements for the raw water circuit on the plant side and the deionized water circuit of the liquid-cooled SINAMICS S120 Cabinet Modules on the converter side.

The coolant consists of a coolant basis and an additional antifreeze agent or inhibitor.
See "Antifreeze and inhibitors".

Plant-side raw water circuit (based on VDI 3803)	
• System pressure with reference to atmospheric pressure, max.	600 kPa
• Inlet temperature of liquid coolant	Antifreeze essential for temperature range between 0 °C (32 °F) and 5 °C (41 °F)
- Degree of protection <IP55	0 ... 38 °C (32 ... 104 °F) without derating >38 ... 43 °C (104 ... 131 °F), see derating characteristics
- Degree of protection IP55	0 ... 33 °C (32 ... 104 °F) without derating >33 ... 38 °C (104 ... 131 °F), see derating characteristics
Coolant quality	
• Electrical conductivity	< 2200 µS/cm
• pH value	7.5 ... 9
• Chloride (Cl^-)	< 180 mg/l
• Sulfate (SO_4^{2-})	<200 mg/l
• Orthophosphate	<50 mg/l
• Dissolved iron	< 3 mg/l
• Dissolved copper	< 0.2 mg/l
• Biological load	< 50 CFU/ml
• SiO_2 as silicic acid	< 47 mg/l
• Aluminum	< 2.65 mg/l
• Fluoride	< 4 mg/l
• Total hardness	< 20 (< 40 °C (104 °F)) °dH
• Size of entrained particles	≤ 0.5 mm (0.02 in)
• SK 4.3 (upper limit value of polymer phosphates for untreated additional water)	< 10 mmol/l
• Permissible limit values for suspended particles in the coolant	No deposits of solid particles at ≥ 0.5 m/s

Converter-side deionized water circuit	
• System pressure with reference to atmospheric pressure, max.	600 kPa
• Pressure drop at rated volumetric flow	70 kPa
• Recommended pressure range	80 ... 150 kPa (is applicable for water as coolant)
• Inlet temperature of liquid coolant	Depending on ambient temperature; no condensation permitted Antifreeze essential for temperature range between 0 °C (32 °F) and 5 °C (41 °F)
- Degree of protection <IP55	0 ... 45 °C (32 ... 113 °F) without derating >45 ... 50 °C (113 ... 122 °F), see derating characteristics
- Degree of protection IP55	0 ... 40 °C (32 ... 104 °F) without derating >40 ... 45 °C (104 ... 113 °F), see derating characteristics
Coolant quality	
• Coolant basis	Distilled, demineralized, completely desalinated water or deionized water with reduced electrical conductivity ISO 3696, quality 3 or based on IEC 60993
• Electrical conductivity when filling	<30 µS/cm (3 mS/m)
• pH value	5 ... 8
• Components that can be oxidized as oxygen content	<30 mg/l
• Residue after vaporization and drying at 110 °C (230 °F)	<10 mg/kg

The coolant definition specified here should only be considered as recommendation. For units that have been shipped, the information and data provided in the equipment manual supplied should be observed!

© Siemens 2024

Technical specifications

Antifreeze and inhibitors

Antifreeze	Antifrogen N	Antifrogen L	DOWCAL 100
Manufacturer	Clariant	Clariant	DOW
Chemical base	Ethylene glycol	Propylene glycol	Ethylene glycol
Minimum concentration	25 %	25 %	25 %
Antifreeze agent with minimum concentration	-10 °C (14 °F)	-10 °C (14 °F)	-10 °C (14 °F)
Maximum concentration	45 %	48 %	45 %
Antifreeze agent with maximum concentration	-30 °C (-22 °F)	-30 °C (-22 °F)	-30 °C (-22 °F)
Inhibitor content	Contains inhibitors with nitrites	Contains inhibitors that are free of nitrites, amines, borates, and phosphate	Contains inhibitors that are free of nitrites, amines, and phosphate
Biocide action with a concentration of	>25 %	>25 %	>25 %

Biocides prevent corrosion that is caused by slime-forming, corrosive or iron-depositing bacteria. These can occur in closed cooling circuits with low water hardness and in open cooling circuits. Biocides must always be selected according to the relevant bacterial risks. Compatibility with inhibitors or antifreeze used with them must be checked on a case-by-case basis.

Inhibitors	Antifrogen N	ANTICORIT S 200 A
Manufacturer	Clariant	Fuchs
Chemical base	Ethylene glycol	-
Minimum concentration	25 %	4 %
Maximum concentration	45 %	5 %

Recommended service

The manufacturer of the antifreeze/inhibitor should analyze the coolant at least once per annum. The concentration and boundary conditions of the antifreeze/inhibitor should be checked. It may be necessary to correct the concentration on the plant side.

© Siemens 2024

Technical specifications

Protection against condensation

With liquid-cooled units, warm air can condense on the cold surfaces of heat sinks, pipes and hoses. This condensation depends on the air humidity and the temperature difference between the ambient air and the coolant.

The water which is produced as a result of condensation can cause corrosion as well as electrical damage such as creepage shorts and flashovers. As the SINAMICS units cannot prevent condensation if it is caused by the prevailing climatic conditions, any potential risk of condensation must be prevented by appropriate engineering or by precautionary measures implemented by the customer. These measures include the following:

- a fixed coolant temperature that has been adjusted to the expected air humidity or ambient temperature ensures that critical differences between the coolant and ambient air temperatures do not develop or
- temperature regulation of the coolant as a function of the ambient air temperature

The temperature at which water vapor contained in the air condenses into water is known as the dew point. In order to reliably prevent condensation, the coolant temperature must always be higher than the dew point.

The table below specifies the **dew point** as a function of room temperature T and relative air humidity Φ for an atmospheric pressure of 100 kPa (1 bar). This corresponds to an installation altitude of 0 to approximately 500 m above sea level. Since the dew point drops as the air pressure decreases, the dew point values at higher installation altitudes are lower than the specified table values. It is therefore the safest approach to engineer the coolant temperature according to the table values for an installation altitude of zero.

Indication of dew point temperature / coolant temperature

Room temperature	**Relative air humidity Φ**										
T	20 %	30 %	40 %	50 %	60 %	70 %	80 %	85 %	90 %	95 %	100 %
10 °C (50 °F)	<0 °C (<32 °F)	<0 °C (<32 °F)	<0 °C (<32 °F)	0.2 °C (32.4 °F)	2.7 °C (36.9 °F)	4.8 °C (40.6 °F)	6.7 °C (44.1 °F)	7.6 °C (45.7 °F)	8.4 °C (47.1 °F)	9.2 °C (48.6 °F)	10 °C (50 °F)
20 °C (68 °F)	<0 °C (<32 °F)	2 °C (35.6 °F)	6 °C (42.8 °F)	9.3 °C (48.7 °F)	12 °C (53.6 °F)	14.3 °C (57.7 °F)	16.4 °C (61.5 °F)	17.4 °C (63.3 °F)	18.3 °C (64.9 °F)	19.1 °C (66.4 °F)	20 °C (68 °F)
25 °C (77 °F)	0.6 °C (33.1 °F)	6.3 °C (43.3 °F)	10.5 °C (50.9 °F)	13.8 °C (56.8 °F)	16.7 °C (62.1 °F)	19.1 °C (66.4 °F)	21.2 °C (70.2 °F)	22.2 °C (72.0 °F)	23.2 °C (73.8 °F)	24.1 °C (75.4 °F)	24.9 °C (76.8 °F)
30 °C (86 °F)	4.7 °C (40.5 °F)	10.5 °C (50.9 °F)	14.9 °C (58.8 °F)	18.4 °C (65.1 °F)	21.3 °C (70.3 °F)	23.8 °C (74.8 °F)	26.1 °C (79.0 °F)	27.1 °C (80.8 °F)	28.1 °C (82.6 °F)	29 °C (84.2 °F)	29.9 °C (85.8 °F)
35 °C (95 °F)	8.7 °C (47.7 °F)	14.8 °C (58.6 °F)	19.3 °C (66.7 °F)	22.9 °C (73.2 °F)	26 °C (78.8 °F)	28.6 °C (83.5 °F)	30.9 °C (87.6 °F)	32 °C (89.6 °F)	33 °C (91.4 °F)	34 °C (93.2 °F)	34.9 °C (94.8 °F)
40 °C (104 °F)	12.8 °C (55.0 °F)	19.1 °C (66.4 °F)	23.7 °C (74.7 °F)	27.5 °C (81.5 °F)	30.6 °C (87.1 °F)	33.4 °C (92.1 °F)	35.8 °C (96.4 °F)	36.9 °C (98.4 °F)	37.9 °C (100 °F)	38.9 °C (102 °F)	39.9 °C (104 °F)
45 °C (113 °F)	16.8 °C (62.2 °F)	23.3 °C (73.9 °F)	28.2 °C (82.8 °F)	32 °C (89.6 °F)	35.3 °C (95.5 °F)	38.1 °C (101 °F)	40.6 °C (105 °F)	41.8 °C (107 °F)	42.9 °C (109 °F)	43.9 °C (111 °F)	44.9 °C (113 °F)
50 °C (122 °F)	20.8 °C (69.4 °F)	27.5 °C (81.5 °F)	32.6 °C (90.7 °F)	36.6 °C (97.9 °F)	40 °C (104 °F)	42.9 °C (109 °F)	45.5 °C (114 °F)	46.6 °C (116 °F)	47.8 °C (118 °F)	48.9 °C (120 °F)	49.9 °C (122 °F)

A detailed description of the cooling circuits and the recommended coolant is given in the SINAMICS Low Voltage Engineering Manual.

© Siemens 2024

Characteristic curves

Derating

Liquid-cooled SINAMICS S120 Cabinet Modules are rated for an ambient temperature of 45 °C and installation altitudes up to 2000 m above sea level and a plant-side raw water temperature of 38 °C (<IP55) or 33 °C (IP55). At ambient temperatures > 45 °C and a plant-side raw water temperature > 38 °C (<IP55) or 33 °C (IP55), the output current must be reduced. Ambient temperatures above 50 °C are not permissible. At installation altitudes > 2000 m above sea level, it must be taken into account that the air pressure, and therefore air density, decreases as the height increases. As a consequence, the cooling efficiency and the insulation capacity of the air also decrease.

At installation altitudes above 2000 m, the line voltage must not exceed certain limits in order to be able to isolate the surge voltages according to IEC 61800-5-1 for overvoltage category III. If the line voltage is above this limit at installation altitudes > 2000 m, measures must be taken to reduce the transient overvoltages of Category III to values of Category II, e. g. supply of the devices via an isolating transformer.
For additional information, please refer to the SINAMICS Low Voltage Engineering Manual.

The intake temperatures in the plant/system side raw water circuit must always be at least 7 K below the intake temperatures in the converter-side deionized water circuit. This ensures that the cooling power of the Heat Exchanger Module of the deionized water circuit, specified in the technical data, can be dissipated to the raw water circuit.

In order to prevent condensation, the inlet temperature of the liquid coolant should be kept above the ambient temperature depending on the relative air humidity.

For additional information, please refer to the SINAMICS Low Voltage Engineering Manual.

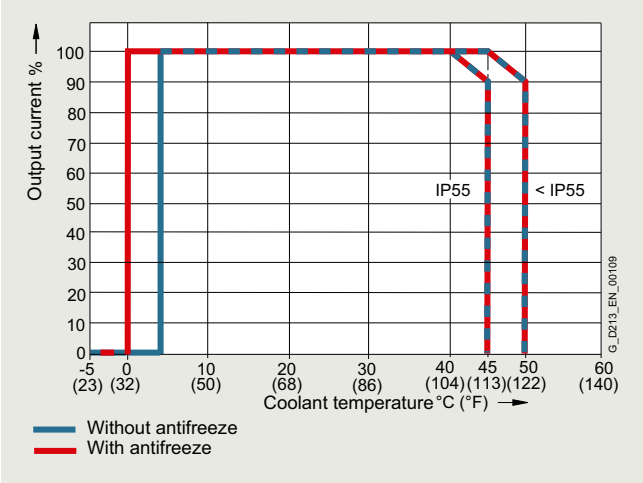

Current derating as a function of the temperature of the cooling liquid in the converter-side deionized water circuit [1],
The inlet temperature of the liquid coolant depends on the ambient temperature, no condensation permitted.

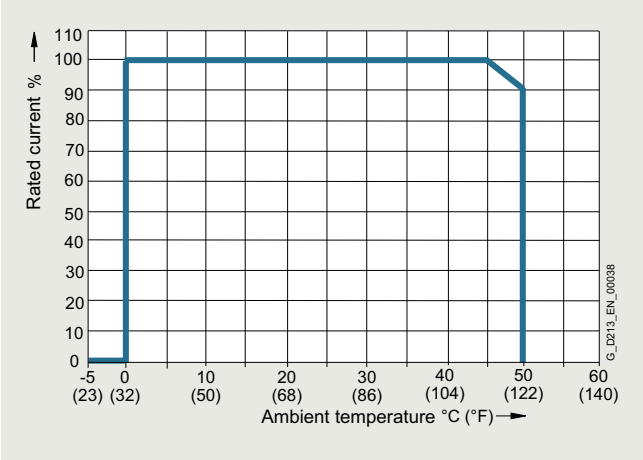

Current derating as a function of ambient temperature [1]

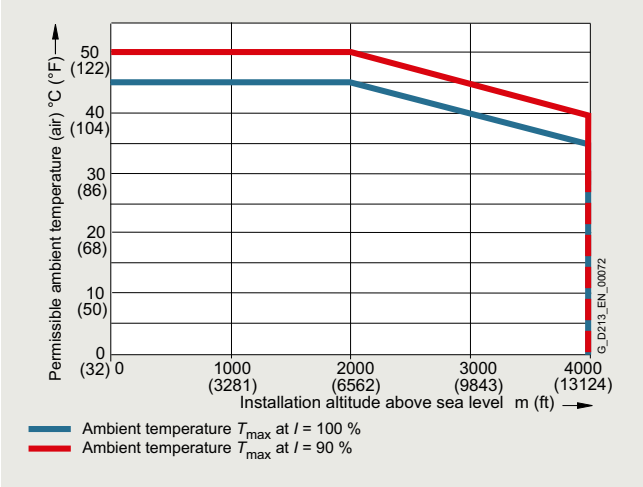

Permissible ambient temperature as a function of installation altitude

[1] The factors of the two derating curves must not be multiplied. The highest value in each case must be assumed for the purposes of calculation, so that the derating factor in the worst-case scenario is 0.9.

© Siemens 2024

Characteristic curves

Current derating as a function of the pulse frequency

To reduce motor noise or to increase output frequency, the pulse frequency can be increased relative to the factory setting (1.25 kHz or 2 kHz). When the pulse frequency is increased, the derating factor of the output current must be taken into account. This derating factor must be applied to the currents specified in the technical data.

For additional information, please refer to the SINAMICS Low Voltage Engineering Manual.

The following table lists the rated output currents of the Motor Modules with pulse frequency set at the factory as well as the current derating factors (permissible output currents referred to the rated output current) for higher pulse frequencies.

Derating factor of the output current as a function of the pulse frequency for units with a rated pulse frequency of 2 kHz

Motor Module	Type rating at 400 V	Output current at 2 kHz	**Derating factor** at pulse frequency					
6SL3725-...	kW	A	2.5 kHz	4 kHz	5 kHz	7.5 kHz	8 kHz	
380 ... 480 V 3 AC / 510 ... 720 V DC								
1TE32-1AA3	110	210	95 %	82 %	74 %	54 %	50 %	
1TE32-6AA3	132	260	95 %	83 %	74 %	54 %	50 %	
1TE33-1AA3	160	310	97 %	88 %	78 %	54 %	50 %	
1TE35-0AA3	250	490	94 %	78 %	71 %	53 %	50 %	
1TE41-4AS3 [1]	800	1330	88 %	55 %	–	–	–	

Derating factor of the output current as a function of the pulse frequency for units with a rated pulse frequency of 1.25 kHz

Motor Module	Type rating at 400 V or 690 V	Output current at 1.25 kHz	**Derating factor** at pulse frequency					
6SL3725-...	kW	A	2 kHz	2.5 kHz	4 kHz	5 kHz	7.5 kHz	8 kHz
380 ... 480 V 3 AC / 510 ... 720 V DC								
1TE36-1AA3	315	605	83 %	72 %	64 %	60 %	40 %	36 %
1TE37-5AA3	400	745	87 %	79 %	64 %	55 %	40 %	37 %
1TE38-4AA3	450	840	87 %	79 %	64 %	55 %	40 %	37 %
1TE41-0.A3	560	985	92 %	87 %	70 %	60 %	50 %	47 %
1TE41-2.A3	710	1260	97 %	95 %	74 %	60 %	50 %	47 %
1TE41-4.A3	800	1405	97 %	95 %	74 %	60 %	50 %	47 %
500 ... 690 V 3 AC / 675 ... 1035 V DC								
1TG31-0AA3	90	100	92 %	88 %	71 %	60 %	40 %	-
1TG31-5AA3	132	150	90 %	84 %	66 %	55 %	35 %	-
1TG32-2AA3	200	215	92 %	87 %	70 %	60 %	40 %	-
1TG33-3AA3	315	330	89 %	82 %	65 %	55 %	40 %	-
1TG34-7AA3	450	465	92 %	87 %	67 %	55 %	35 %	-
1TG35-8AA3	560	575	91 %	85 %	64 %	50 %	35 %	-
1TG37-4AA3	710	735	84 %	74 %	53 %	40 %	25 %	-
1TG38-0AA3	800 [2]	810	82 %	71 %	52 %	40 %	25 %	-
1TG38-1.A3	800	810	97 %	95 %	71 %	55 %	35 %	-
1TG41-0.A3	1000	1025	91 %	86 %	64 %	50 %	30 %	-
1TG41-3.A3	1200	1270	87 %	79 %	55 %	40 %	25 %	-
1TG41-6.P3	1500	1560	87 %	79 %	55 %	40 %	25 %	-

[1] This Motor Module has been specifically designed for loads demanding a high dynamic performance. The derating factor k_{IGBT} and the derating characteristics can be ignored (see section "Duty cycles" in the SINAMICS Low Voltage Engineering Manual)..

[2] The Motor Module 6SL3725-1TG38-0AA3 is optimized for low overload; with an increased pulse frequency, the derating factor is higher than for the Motor Module 6SL3725-1TG38-1AA3

© Siemens 2024

Characteristic curves

Maximum output frequencies achieved by increasing the pulse frequency

The adjustable pulse frequencies – and therefore the output frequencies that can be achieved with the factory-set current controller clock cycles – are listed below.

Current controller clock cycle T_I	Adjustable pulse frequency f_p	Max. achievable output frequency f_A		
		V/f mode	Vector mode	Servo mode
250 µs [1]	2 kHz	166 Hz	166 Hz	333 Hz
	4 kHz	333 Hz	333 Hz	550 Hz [3]
	8 kHz	550 Hz [3]	480 Hz	550 Hz [3]
400 µs [2]	1.25 kHz	104 Hz	104 Hz	–
	2.5 kHz	208 Hz	208 Hz	–
	5.0 kHz	416 Hz	300 Hz	–
	7.5 kHz	550 Hz [3]	300 Hz	–

[1] As factory setting, the following devices have a current controller clock cycle of 250 µs and a pulse frequency of 2 kHz:
- 510 ... 720 V DC: ≤ 250 kW / 490 A, 6SL3725-1TE41-4AS5

[2] As factory setting, the following devices have a current controller clock cycle of 400 µs and a pulse frequency of 1.25 kHz:
- 510 ... 720 V DC: ≥ 315 kW / 605 A, except 6SL3725-1TE41-4AS5,
- 675 ... 1035 V DC: All power ratings

[3] With the "High output frequencies" license, which can be ordered as option J01 on the CompactFlash card for SINAMICS S120, the maximum output frequency is increased up to 650 Hz. For more information, see https://support.industry.siemens.com/cs/document/104020669

© Siemens 2024

Characteristic curves

Overload capability

SINAMICS S120 Cabinet Modules have an overload reserve, e.g. to handle breakaway torques. If larger surge loads occur, this must be taken into account in the configuration. For drives with overload requirements, the appropriate base load current must, therefore, be used as a basis for the required load.

Permissible overload assumes that the converter is operated at its base-load current before and after the overload occurs, based on a duty cycle duration of 300 s.

Another precondition is that the Motor Modules are operated at their factory-set pulse frequency at output frequencies >10 Hz.

For temporary, periodic duty cycles with high variations of load within the duty cycle, the relevant sections of the SINAMICS Low Voltage Engineering Manual must be observed.

Motor Modules

Motor Modules can be configured on the basis of different base load currents.

The base-load current for a low overload I_L is the basis for a duty cycle of 110 % for 60 s or 150 % for 10 s.

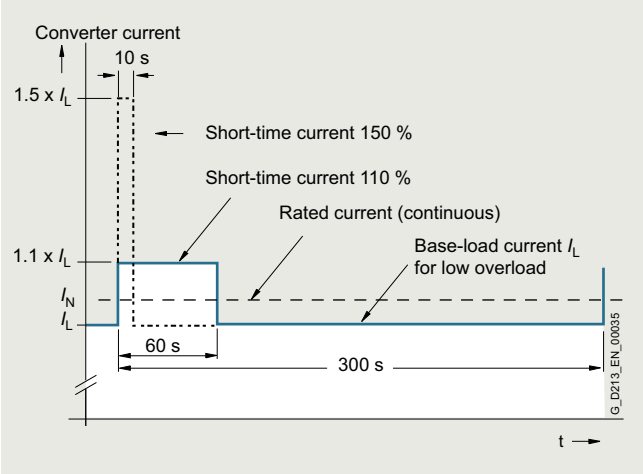

Low overload

The base-load current I_H for a high overload is based on a load cycle of 150 % for 60 s or 160 % for 10 s.

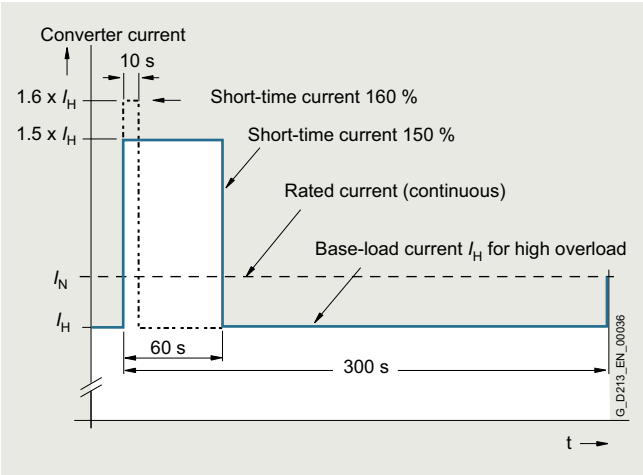

High overload

The following applies to the Motor Module 6SL3725-1TG41-6.P3: This Motor Module is particularly suited to high breakaway torques with applications such as drilling, mixers, centrifuges, and test bays. An **additional** duty cycle is required at output frequencies of 5 Hz to 10 Hz.
At output frequencies of 1 Hz to 5 Hz, the short-time current is 1900 A for 5 s.

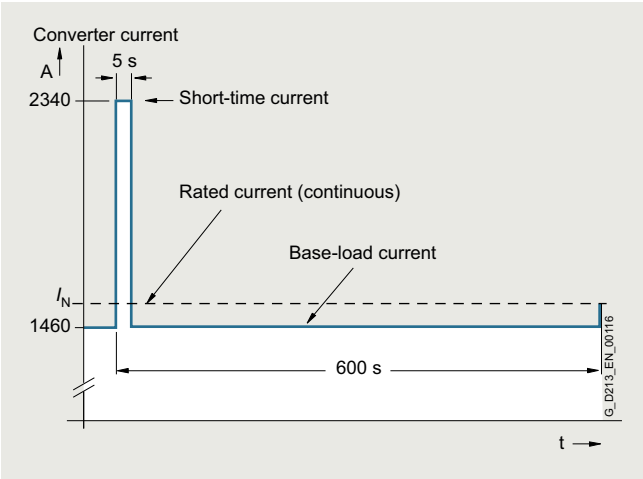

High overload for Motor Module 6SL3725-1TG41-6.P3

Basic Line Connection Modules and Active Line Connection Modules

The base-load current for a high overload $I_{H\,DC}$ is the basis for a duty cycle of 150 % for 60 s or $I_{max\,DC}$ for 5 s.

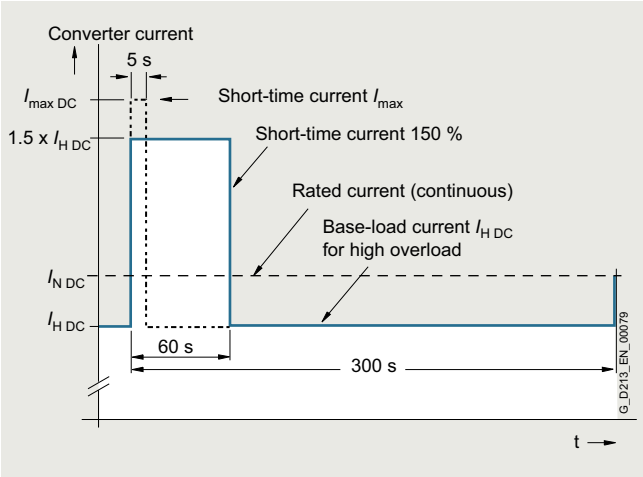

High overload

© Siemens 2024

Overview

Basic Line Connection Modules are compact line infeeds for two-quadrant operation, i.e. no regenerative feedback. They are used when energy need not be fed back into the network.

Basic Line Connection Modules comprise a Line Connection Module and a liquid-cooled Basic Line Module.

As standard, the Basic Line Connection Module is positioned in the drive line-up so that the Motor Modules are arranged to the right. If Motor Modules are to be arranged to the left of the Basic Line Connection Module, option **M88** (DC bus system for line-side Cabinet Modules) must be ordered.

Line Connection Modules contain the line-side infeed via main breaker with fuse switch disconnector or circuit breaker and establish the connection between the plant power system and the Basic Line Modules. They are equipped as standard with a radio interference suppression filter according to EN 61800-3 Category C3.

Under full load, the DC link voltage is higher than the rms value of the rated line voltage by a factor of 1.32, and under partial load by a factor of 1.35.

If regenerative conditions occur in the drive line-up, a Motor Module can be used as braking chopper, which then converts excess energy to heat in a braking resistor.

Basic Line Connection Modules are suitable for connection to grounded TN/TT and non-grounded IT systems. The following voltages and power ratings are available:

Line voltage	Rated input current	Rated power
380 ... 480 V 3 AC	610 ... 1420 A	360 ... 830 kW
500 ... 690 V 3 AC	340 ... 1350 A	355 ... 1370 kW

For a Basic Line Connection Module a line reactor should be provided at the connection point depending on the line short-circuit power. This reactor is available as standard.
However, it can be omitted if it is not required (option **L22**).
Further information can be found in the SINAMICS Low Voltage Engineering Manual.

Design

Depending on the input current, the following versions are available:

- ≤ 800 A: Main circuit breaker with fuse switch disconnector
- > 800 A: Circuit breaker, type 3WL, with option **L25** as withdrawable circuit breaker

A fully controlled thyristor bridge is used to pre-charge the Basic Line Connection Module and the connected DC link.
The thyristors normally operate with a trigger delay angle of 0°.

The power rating can be increased by connecting Basic Line Connection Modules in parallel. You must observe the following rules:

- Up to four identical Active Line Connection Modules can be connected in parallel.
- A common Control Unit is required whenever the modules are connected in parallel.
- The parallel connection must be supplied from a common infeed point (i.e. the modules cannot be operated on different line supplies). For information on using line reactors, see section Basic Line Connection Modules → Overview.
- A derating factor of 7.5 % must be taken into consideration, regardless of the number of modules connected in parallel.
- The main contactors or circuit breakers of the respective Line Connection Modules must close together and simultaneously. Monitoring is performed via the -X50 terminals of the respective Line Connection Module.
- Option **M88** must be ordered.

For additional information, please refer to the SINAMICS Low Voltage Engineering Manual.

Selection and ordering data

Rated power at 400 V or 690 V	Rated DC link current	**Basic Line Connection Module**
kW	A	Article No.
Line voltage 380 ... 480 V 3 AC (DC link voltage 510 ... 650 V DC)		
360	740	**6SL3735-1TE37-4LA3**
600	1220	**6SL3735-1TE41-2LA3**
830	1730	**6SL3735-1TE41-7LA3**
Line voltage 500 ... 690 V 3 AC (DC link voltage 675 ... 930 V DC)		
355	420	**6SL3735-1TG34-2LA3**
630	730	**6SL3735-1TG37-3LA3**
1100	1300	**6SL3735-1TG41-3LA3**
1370	1650	**6SL3735-1TG41-7LA3**

© Siemens 2024

Integration

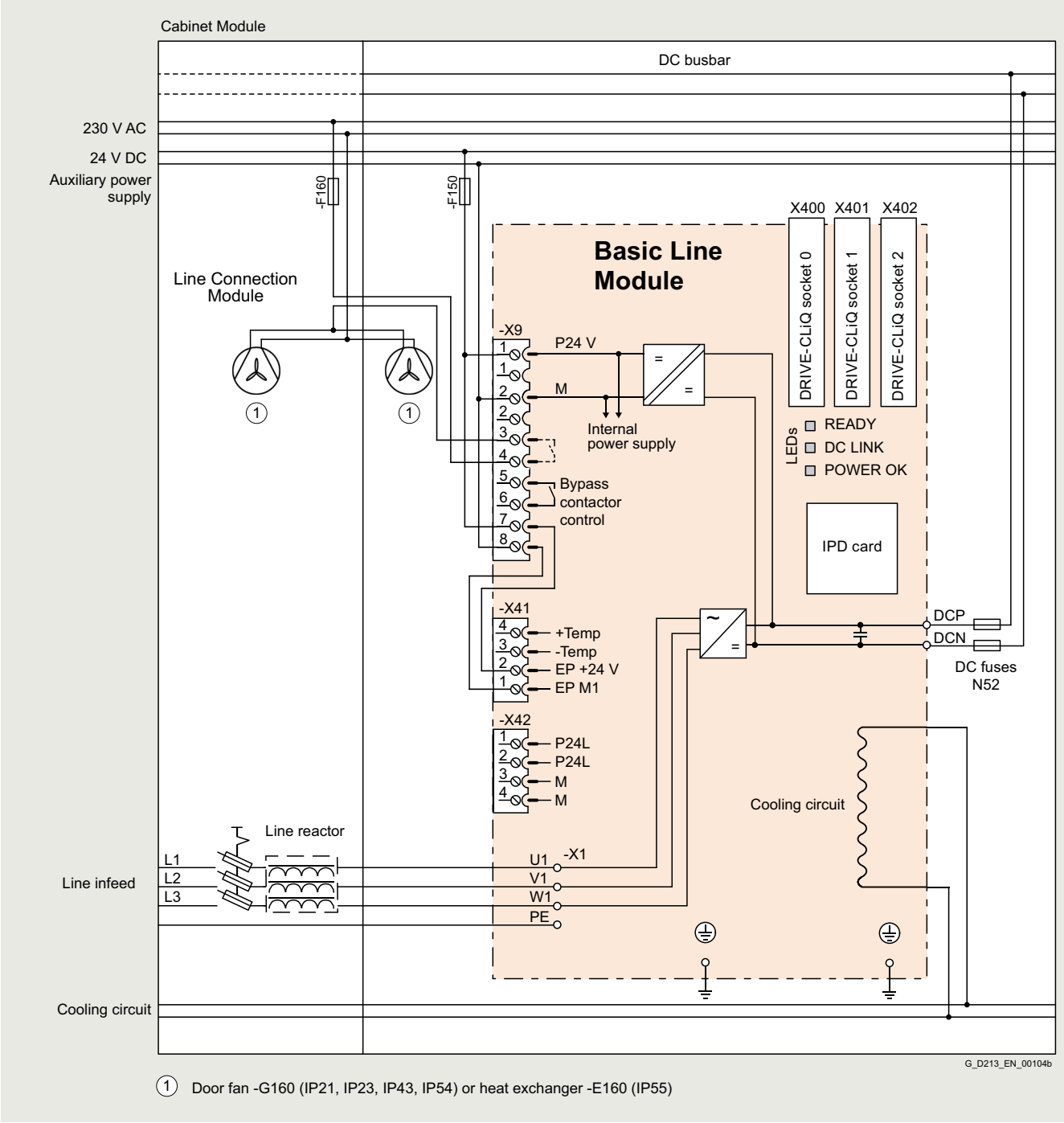

Connection example of the Basic Line Connection Module, liquid-cooled

© Siemens 2024

Technical specifications

Line voltage 380 ... 480 V 3 AC		Basic Line Connection Modules		
		6SL3735-1TE37-4LA3	6SL3735-1TE41-2LA3	6SL3735-1TE41-7LA3
Rated power				
• At $I_{N\ DC}$ (50 Hz 400 V)	kW	**360**	**600**	**830**
• At $I_{H\ DC}$ (50 Hz 400 V)	kW	280	450	650
• At $I_{N\ DC}$ (60 Hz 460 V)	hp	555	925	1280
• At $I_{H\ DC}$ (60 Hz 460 V)	hp	430	690	1000
DC link current				
• Rated current $I_{N\ DC}$	A	740	1220	1730
• Base-load current $I_{H\ DC}$ [1]	A	578	936	1350
• Maximum current $I_{max\ DC}$	A	1110	1830	2595
Input current				
• Rated current $I_{N\ I}$	A	610	1000	1420
• Maximum current $I_{max\ I}$	A	915	1500	2130
Current demand				
• 24 V DC auxiliary power supply	A	0.8	0.8	0.8
• 230 V 1 AC	A	1.2	1.2	1.2
DC link capacitance				
• Basic Line Module	µF	12000	20300	26100
• Drive line-up, max.	µF	96000	162400	208800
Power loss, max. [2]				
at 50 Hz 400 V				
• Degree of protection <IP55				
- Dissipated to coolant	kW	2.7	4.4	5.8
- Dissipated to ambient air	kW	2.7	3.5	4.2
• Degree of protection IP55				
- Dissipated to coolant	kW	4.9	7.4	9.5
- Dissipated to ambient air	kW	0.5	0.5	0.5
Coolant volume flow [3]	l/min (US gal./min)	9/36 (2.38/9.51)	9/36 (2.38/9.51)	12/39 (3.17/10.3)
Degree of protection <IP55/IP55				
Liquid volume	dm^3	6.6/10.2	6.6/10.2	6.9/10.5
Degree of protection <IP55/IP55				
Pressure drop, max. [4]	Pa	150000	150000	150000
for volume flow				
Heat exchanger material		Aluminum	Aluminum	Aluminum
Sound pressure level L_{pA}	dB	54	56	56
(1 m) at 50/60 Hz				
Line supply connection		4 x M12	10 x M12	10 x M12
L1, L2, L3				
• Conductor cross-section, max. (IEC)	mm^2	4 × 240	8 × 240	10 × 240
PE/GND connection		PE bar	PE bar	PE bar
• Busbar cross-section	mm^2	600	600	600
• Conductor cross-section, max. (IEC)	mm^2	240	240	240
Cable length, max. [5]				
Shielded/unshielded	m (ft)	2600/3900 (8531/12796)	4000/6000 (13124/19686)	4800/7200 (15749/23623)
Degree of protection		IP21	IP21	IP21
(standard version)				
Dimensions				
• Width	mm (in)	1000 (39.4)	1000 (39.4)	1000 (39.4)
• Height	mm (in)	2200 (86.6)	2200 (86.6)	2200 (86.6)
• Depth	mm (in)	600 (23.6)	600 (23.6)	600 (23.6)
Weight, approx.	kg (lb)	688 (1517)	838 (1847)	995 (2194)
(standard version)				
Frame size				
• Line Connection Module		HL	JL	JL
• Basic Line Module		FBL	FBL	GBL
Rated short-circuit current according to IEC	kA	65	84	100
Minimum short-circuit current [6]	kA	8.8	2	3.2

[1] The base-load current $I_{H\ DC}$ is the basis for a duty cycle of 150 % for 60 s or $I_{max\ DC}$ for 5 s with a duty cycle duration of 300 s.

[2] The specified power loss represents the maximum value at 100 % utilization. The value is lower under normal operating conditions.

[3] The value applies to coolants comprising water and a mixture of water and antifreeze agent.

[4] The value is valid for water as coolant.
Additional information and notes on other coolants are provided in the SINAMICS Low Voltage Engineering Manual.

[5] Total of all motor cables and DC link. Longer cable lengths for specific configurations are available on request.

[6] Current required for reliably triggering protective devices.

© Siemens 2024

Technical specifications

Line voltage 500 ... 690 V 3 AC		Basic Line Connection Modules			
		6SL3735-1TG34-2LA3	6SL3735-1TG37-3LA3	6SL3735-1TG41-3LA3	6SL3735-1TG41-7LA3
Rated power					
• At $I_{N\,DC}$ (50 Hz 690 V)	kW	**355**	**630**	**1100**	**1370**
• At $I_{H\,DC}$ (50 Hz 690 V)	kW	275	475	840	1070
• At $I_{N\,DC}$ (50 Hz 500 V)	kW	245	420	750	950
• At $I_{H\,DC}$ (50 Hz 500 V)	kW	200	345	610	775
• At $I_{N\,DC}$ (60 Hz 575 V)	hp	395	705	1230	1530
• At $I_{H\,DC}$ (60 Hz 575 V)	hp	305	530	940	1195
DC link current					
• Rated current $I_{N\,DC}$	A	420	730	1300	1650
• Base-load current $I_{H\,DC}$ [1]	A	328	570	1014	1287
• Maximum current $I_{max\,DC}$	A	630	1095	1950	2475
Input current					
• Rated current $I_{N\,I}$	A	340	600	1070	1350
• Maximum current $I_{max\,I}$	A	510	900	1605	2025
Current demand					
• 24 V DC auxiliary power supply	A	0.8	0.8	0.8	0.8
• 230 V 1 AC	A	1.2	1.2	1.2	1.2
DC link capacitance					
• Basic Line Module	µF	4800	7700	15500	19300
• Drive line-up, max.	µF	38400	61600	124000	154400
Power loss, max. [2]					
at 50 Hz 690 V					
• Degree of protection <IP55					
- Dissipated to coolant	kW	1.8	2.7	4.7	5.7
- Dissipated to ambient air	kW	2.3	2.7	3.3	5.1
• Degree of protection IP55					
- Dissipated to coolant	kW	3.3	4.9	7.5	10.3
- Dissipated to ambient air	kW	0.5	0.5	0.5	0.5
Coolant volume flow [3] Degree of protection <IP55/IP55	l/min (US gal./min)	9/36 (2.38/9.51)	9/36 (2.38/9.51)	12/39 (3.17/10.3)	12/39 (3.17/10.3)
Liquid volume Degree of protection <IP55/IP55	dm^3	6.6/10.2	6.6/10.2	6.9/10.5	6.9/10.5
Pressure drop, max. [4] for volume flow	Pa	150000	150000	150000	150000
Heat exchanger material		Aluminum	Aluminum	Aluminum	Aluminum
Sound pressure level L_{pA} (1 m) at 50/60 Hz	dB	54	54	56	56
Line supply connection L1, L2, L3		2 x M12	4 x M12	10 x M12	10 x M12
• Conductor cross-section, max. (IEC)	mm^2	2 × 150	4 × 240	8 × 240	8 × 240
PE/GND connection		PE bar	PE bar	PE bar	PE bar
• Busbar cross-section	mm^2	600	600	600	600
• Conductor cross-section, max. (IEC)	mm^2	240	240	240	240
Cable length, max. [5] Shielded/unshielded	m (ft)	1500/2250 (4921/7382)	1500/2250 (4921/7382)	2250/3375 (7382/11073)	2250/3375 (7382/11073)
Degree of protection (standard version)		IP21	IP21	IP21	IP21
Dimensions					
• Width	mm (in)	1000 (39.4)	1000 (39.4)	1000 (39.4)	1000 (39.4)
• Height	mm (in)	2200 (86.6)	2200 (86.6)	2200 (86.6)	2200 (86.6)
• Depth	mm (in)	600 (23.6)	600 (23.6)	600 (23.6)	600 (23.6)
Weight, approx. (standard version)	kg (lb)	578 (1274)	668 (1473)	995 (2194)	1025 (2260)
Frame size					
• Line Connection Module		GL	HL	JL	JL
• Basic Line Module		FBL	FBL	GBL	GBL
Rated short-circuit current according to IEC	kA	65	84	100	100
Minimum short-circuit current [6]	kA	4.4	7.2	2.5	3.2

[1] The base-load current $I_{H\,DC}$ is the basis for a duty cycle of 150 % for 60 s or $I_{max\,DC}$ for 5 s with a duty cycle duration of 300 s.

[2] The specified power loss represents the maximum value at 100 % utilization. The value is lower under normal operating conditions.

[3] The value applies to coolants comprising water and a mixture of water and antifreeze agent.

[4] The value is valid for water as coolant.
Additional information and notes on other coolants are provided in the SINAMICS Low Voltage Engineering Manual.

[5] Total of all motor cables and DC link. Longer cable lengths for specific configurations are available on request.

[6] Current required for reliably triggering protective devices.

© Siemens 2024

Overview

Active Line Connection Modules comprise a Line Connection Module, a liquid-cooled Active Interface Module and a liquid-cooled Active Line Module. They can supply motoring energy to the DC link and return regenerative energy to the line supply.

As standard, the Active Line Connection Module is positioned in the drive line-up so that the Motor Modules are arranged to the right. If Motor Modules are to be arranged to the left of the Active Line Connection Module, option **M88** (DC bus system for line-side Cabinet Modules) must be ordered.

Line Connection Modules contain the line-side infeed via main breaker with fuse switch disconnector or circuit breaker and establish the connection between the plant power system and the Active Line Modules. They are equipped as standard with a radio interference suppression filter according to EN 61800-3 Category C3.

Active Line Connection Modules produce a stabilized DC voltage that remains constant regardless of fluctuations in the line voltage (the line voltage must remain within the permissible tolerances).

In the factory setting, the DC voltage is regulated to 1.5 times the rms value of the rated line voltage.

Active Line Connection Modules draw a virtually sinusoidal current from the supply system and cause virtually no line harmonics.

Active Line Connection Modules are suitable for connection to supply systems grounded at the neutral point (TN, TT) and non-grounded (IT) supply systems. The following voltages and currents are available:

Line voltage	Rated infeed/ regenerative feedback current	Rated power
380 ... 480 V 3 AC	605 ... 1405 A	380 ... 900 kW
500 ... 690 V 3 AC	735 ... 1560 A	800 ... 1700 kW

Design

Active Line Connection Modules always include an Active Interface Module, which contains the associated Clean Power Filter and pre-charging circuit. The line filter that is included ensures compliance with the EMC requirements for the “second environment”.

Depending on the input current, the following versions are available:

- ≤ 800 A: Main circuit breaker with fuse switch disconnector
- > 800 A: Circuit breaker, type 3WL, with option **L25** as withdrawable circuit breaker

The power rating can be increased by connecting Active Line Connection Modules in parallel. You must observe the following rules:

- Up to four identical Active Line Connection Modules can be connected in parallel.
- A common Control Unit is required whenever the modules are connected in parallel.
- The parallel connection must be supplied from a common infeed point (i.e. the modules cannot be operated on different line supplies).
- A derating factor of 5% must be taken into consideration, regardless of the number of modules connected in parallel.
- The main contactors or circuit breakers of the respective Line Connection Modules must close together and simultaneously. Monitoring is performed via the -X50 terminals of the respective Line Connection Module.

For additional information, please refer to the SINAMICS Low Voltage Engineering Manual.

Selection and ordering data

Rated power at 400 V or 690 V	Rated DC link current	**Active Line Connection Module**
kW	A	Article No.
Line voltage 380 ... 480 V 3 AC (DC link voltage 570 ... 720 V DC)		
380	677	**6SL3735-7TE36-1LA3**
500	941	**6SL3735-7TE38-4LA3**
630	1100	**6SL3735-7TE41-0LA3**
900	1573	**6SL3735-7TE41-4LA3**
Line voltage 500 ... 690 V 3 AC (DC link voltage 750 ... 1035 V DC)		
800	823	**6SL3735-7TG37-4LA3**
900	907	**6SL3735-7TG38-1LA3**
1100	1147	**6SL3735-7TG41-0LA3**
1400	1422	**6SL3735-7TG41-3LA3**
1700	1740	**6SL3735-7TG41-6LA3**

© Siemens 2024

Integration

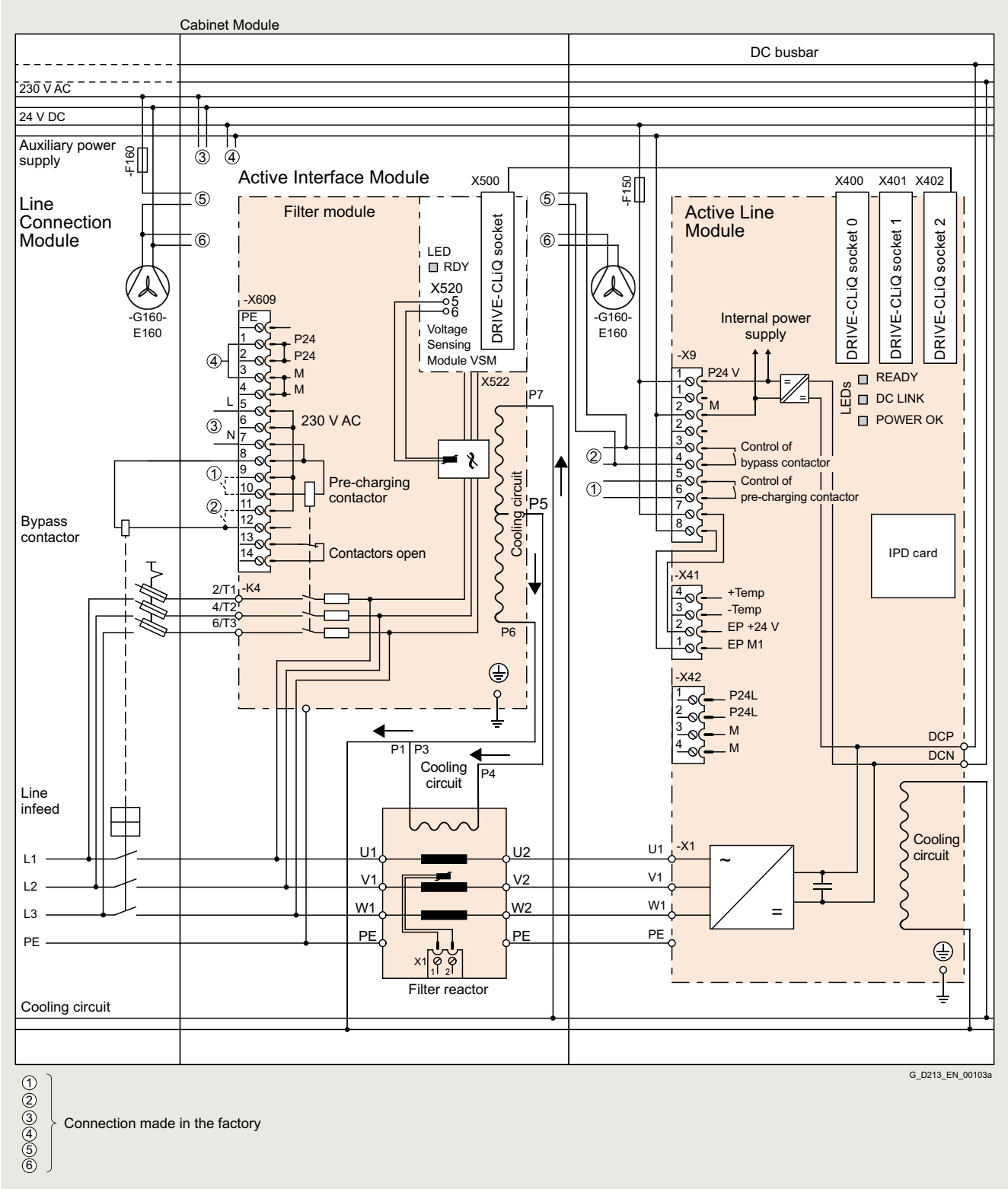

Connection example of an Active Line Connection Module, liquid-cooled - parallel cooling circuit in the Active Interface Module

© Siemens 2024

Integration

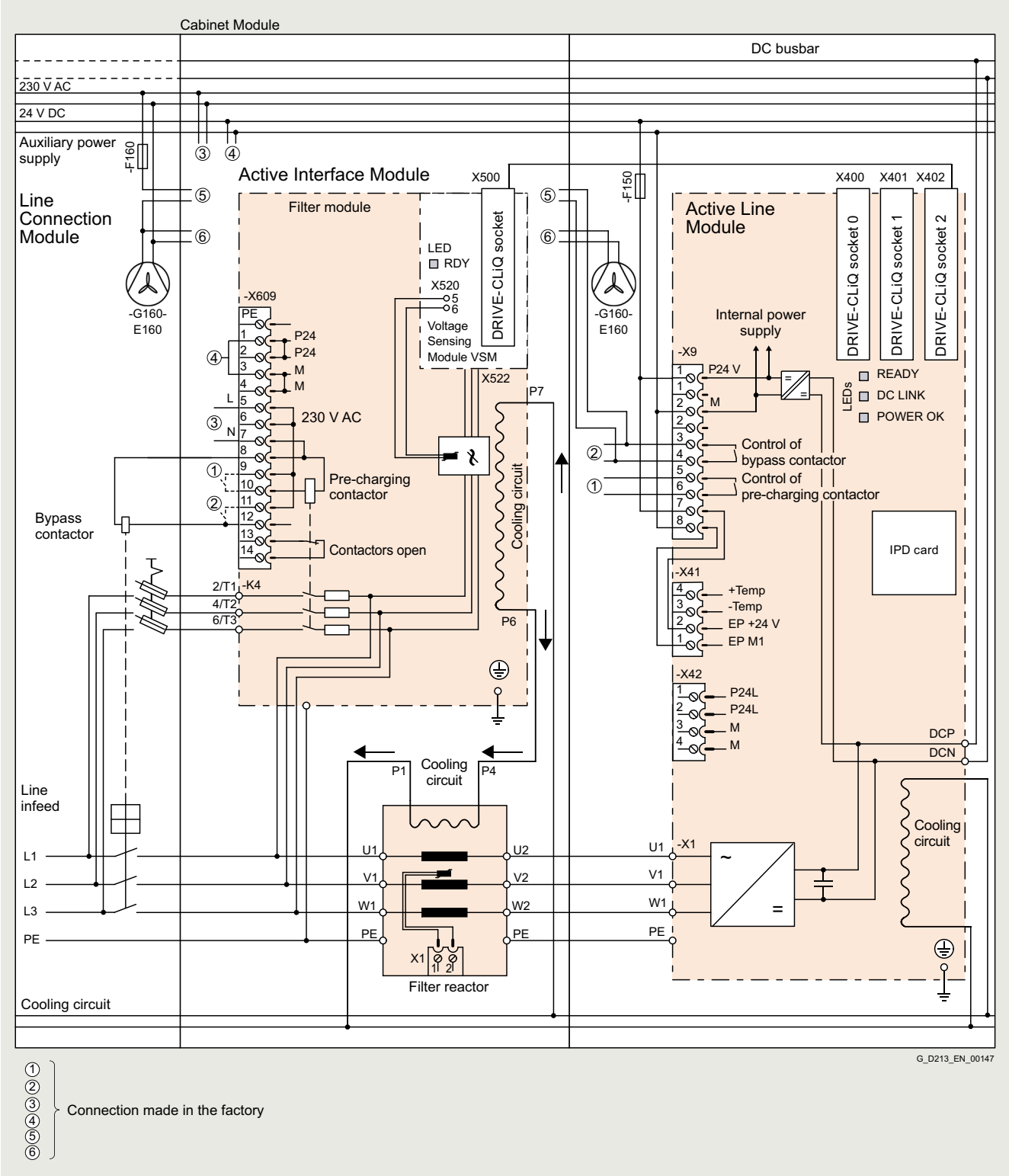

Connection example of an Active Line Connection Module, liquid-cooled - serial cooling circuit in the Active Interface Module

© Siemens 2024

Technical specifications

Line voltage 380 ... 480 V 3 AC		Active Line Connection Modules			
		6SL3735-7TE36-1LA3	6SL3735-7TE38-4LA3	6SL3735-7TE41-0LA3	6SL3735-7TE41-4LA3
Rated power					
• At $I_{N\,DC}$ (50 Hz 400 V)	kW	**380**	**500**	**630**	**900**
• At $I_{H\,DC}$ (50 Hz 400 V)	kW	335	465	545	780
• At $I_{N\,DC}$ (60 Hz 460 V)	hp	600	700	900	1250
• At $I_{H\,DC}$ (60 Hz 460 V)	hp	500	700	800	1000
DC link current					
• Rated current $I_{N\,DC}$	A	677	941	1100	1573
• Base-load current $I_{H\,DC}$ [1]	A	603	837	982	1401
• Maximum current $I_{max\,DC}$	A	1017	1410	1654	2361
Infeed/regenerative feedback current					
• Rated current $I_{N\,I}$	A	605	840	985	1405
• Maximum current $I_{max\,I}$	A	907	1260	1477	2055
Current demand					
• 24 V DC auxiliary power supply	A	1.77	1.77	1.7	1.7
• 230 V 1 AC	A	1.2	1.2	1.2	1.2
DC link capacitance					
• Active Line Module	µF	12600	17400	18900	28800
• Drive line-up, max.	µF	134400	134400	230400	230400
Power loss, max. [2]					
at 50 Hz 400 V					
• Degree of protection <IP55					
- Dissipated to coolant	kW	10.9	11.7	19.6	21.8
- Dissipated to ambient air	kW	2.4	2.3	3.1	3.8
• Degree of protection IP55					
- Dissipated to coolant	kW	12.2	13.1	21.8	24.7
- Dissipated to ambient air	kW	0.9	0.9	0.9	0.9
Coolant volume flow [3] Degree of protection <IP55/IP55	l/min (US gal./min)	26/53 (6.87/14.0)	26/53 (6.87/14.0)	43/70 (11.4/18.5)	43/70 (11.4/18.5)
Liquid volume Degree of protection <IP55/IP55	dm^3	13/16.6	13/16.6	14/17.6	14/17.6
Pressure drop, max. [4] for volume flow	Pa	150000	150000	150000	150000
Heat exchanger material					
• Active Line Module		Aluminum	Aluminum	Aluminum	Aluminum
• Active Interface Module		Aluminum	Aluminum	Aluminum	Aluminum
Sound pressure level L_{pA} [5] (1 m) at 50/60 Hz	dB	65/65	65/65	65/65	65/65
Line supply connection L1, L2, L3		4 x M12	10 x M12	10 x M12	10 x M12
• Conductor cross-section, max. (IEC)	mm^2	4 × 240	4 × 240	8 × 240	10 × 240
PE/GND connection		PE bar	PE bar	PE bar	PE bar
• Busbar cross-section	mm^2	600	600	600	600
• Conductor cross-section, max. (IEC)	mm^2	240	240	240	240
Cable length, max. [6] Shielded/unshielded	m (ft)	3900/5850 (12795/19193)	3900/5850 (12795/19193)	3900/5850 (12795/19193)	3900/5850 (12795/19193)
Degree of protection (standard version)		IP21	IP21	IP21	IP21
Dimensions					
• Width	mm (in)	1600 (63.0)	1600 (63.0)	1600 (63.0)	1600 (63.0)
• Height	mm (in)	2200 (86.6)	2200 (86.6)	2200 (86.6)	2200 (86.6)
• Depth	mm (in)	600 (23.6)	600 (23.6)	600 (23.6)	600 (23.6)
Weight, approx. (standard version)	kg (lb)	1134 (2500)	1244 (2743)	1430 (3153)	1470 (3241)
Frame size					
• Line Connection Module		HL	JL	JL	JL
• Active Interface Module		JIL	JIL	JIL	JIL
• Active Line Module		HXL	HXL	JXL	JXL
Rated short-circuit current according to IEC	kA	65	84	84	100
Minimum short-circuit current [7]	kA	9.2	2	2	3.2

[1] The base-load current $I_{H\,DC}$ is the basis for a duty cycle of 150 % for 60 s or $I_{max\,DC}$ for 5 s with a duty cycle duration of 300 s.

[2] The specified power loss represents the maximum value at 100 % utlization. The value is lower under normal operating conditions.

[3] The value applies to coolants comprising water and a mixture of water and antifreeze agent.

[4] The value is valid for water as coolant.
Additional information and notes on other coolants are provided in the SINAMICS Low Voltage Engineering Manual.

[5] Total sound pressure level of Active Interface Module and Active Line Module.

[6] Total of all motor cables and DC link. Longer cable lengths for specific configurations are available on request.

[7] Current required to ensure reliable tripping of installed protective devices.

© Siemens 2024

Technical specifications

Line voltage 500 ... 690 V 3 AC		Active Line Connection Modules				
		6SL3735-7TG37-4LA3	6SL3735-7TG38-1LA3	6SL3735-7TG41-0LA3	6SL3735-7TG41-3LA3	6SL3735-7TG41-6LA3
Rated power						
• At $I_{N\,DC}$ (50 Hz 690 V)	kW	**800**	**900**	**1100**	**1400**	**1700**
• At $I_{H\,DC}$ (50 Hz 690 V)	kW	705	670	1000	1215	1490
• At $I_{N\,DC}$ (50 Hz 500 V)	kW	560	620	780	965	1180
• At $I_{H\,DC}$ (50 Hz 500 V)	kW	510	485	710	880	1080
• At $I_{N\,DC}$ (60 Hz 575 V)	hp	900	975	1250	1500	1855
• At $I_{H\,DC}$ (60 Hz 575 V)	hp	600	765	1000	1250	1530
DC link current						
• Rated current $I_{N\,DC}$	A	823	907	1147	1422	1740
• Base-load current $I_{H\,DC}$ [1]	A	732	808	936	1266	1550
• Maximum current $I_{max\,DC}$	A	1235	1360	1722	2133	2620
Infeed/regenerative feedback current						
• Rated current $I_{N\,I}$	A	735	810	1025	1270	1560
• Maximum current $I_{max\,I}$	A	1100	1214	1537	1905	2055
Current demand						
• 24 V DC auxiliary power supply	A	1.7	1.7	1.7	1.7	1.67
• 230 V 1 AC	A	1.2	1.2	1.2	1.2	1.2
DC link capacitance						
• Active Line Module	µF	10500	10500	16000	19330	21000
• Drive line-up, max.	µF	153600	153600	153600	153600	210000
Power loss, max. [2]						
at 50 Hz 400 V						
• Degree of protection <IP55						
- Dissipated to coolant	kW	17.0	19.5	21.6	27.3	27.7
- Dissipated to ambient air	kW	2.4	2.4	3.1	3.7	4.4
• Degree of protection IP55						
- Dissipated to coolant	kW	18.4	20.9	23.7	30.1	39.2
- Dissipated to ambient air	kW	0.9	0.9	0.9	0.9	0.9
Coolant volume flow [3] Degree of protection <IP55/IP55	l/min (US gal./min)	26/53 (6.87/14.0)	26/53 (6.87/14.0)	37/64 (9.78/16.9)	37/64 (9.78/16.9)	43/70 (11.4/18.5)
Liquid volume Degree of protection <IP55/IP55	dm^3	13/16.6	14/17.6	14/17.6	14/17.6	14/17.6
Pressure drop, max. [4] for volume flow	Pa	150000	150000	150000	150000	150000
Heat exchanger material						
• Active Line Module		Aluminum	Aluminum	Aluminum	Aluminum	Aluminum
• Active Interface Module		Aluminum	Aluminum	Aluminum	Aluminum	Aluminum
Sound pressure level L_{pA} [5] (1 m) at 50/60 Hz	dB	65/65	65/65	65/65	65/65	65/65
Line supply connection L1, L2, L3		4 x M12	10 x M12	10 x M12	10 x M12	10 x M12
• Conductor cross-section, max. (IEC)	mm^2	8 × 240	8 × 240	8 × 240	8 × 240	8 × 240
PE/GND connection		PE bar	PE bar	PE bar	PE bar	PE bar
• Busbar cross-section	mm^2	600	600	600	600	600
• Conductor cross-section, max. (IEC)	mm^2	240	240	240	240	240
Cable length, max. [6] Shielded/unshielded	m (ft)	2250/3375 (7382/11073)	2250/3375 (7382/11073)	2250/3375 (7382/11073)	2250/3375 (7382/11073)	2250/3375 (7382/11073)
Degree of protection (standard version)		IP21	IP21	IP21	IP21	IP21
Dimensions						
• Width	mm (in)	1600 (63.0)	1600 (63.0)	1600 (63.0)	1600 (63.0)	1600 (63.0)
• Height	mm (in)	2200 (86.6)	2200 (86.6)	2200 (86.6)	2200 (86.6)	2200 (86.6)
• Depth	mm (in)	600 (23.6)	600 (23.6)	600 (23.6)	600 (23.6)	600 (23.6)
Weight, approx. (standard version)	kg (lb)	1150 (2535)	1365 (3009)	1520 (3351)	1540 (3395)	1640 (3616)
Frame size						
• Line Connection Module		HL	JL	JL	JL	JL
• Active Interface Module		JIL	JIL	JIL	JIL	JIL
• Active Line Module		HXL	HXL	JXL	JXL	JXL
Rated short-circuit current according to IEC	kA	84	100	100	100	100
Minimum short-circuit current [7]	kA	10.5	2	2	3.2	3.2

1) The base-load current $I_{H\,DC}$ is the basis for a duty cycle of 150 % for 60 s or $I_{max\,DC}$ for 5 s with a duty cycle duration of 300 s.

2) The specified power loss represents the maximum value at 100 % utlization. The value is lower under normal operating conditions.

3) The value applies to coolants comprising water and a mixture of water and antifreeze agent.

4) The value is valid for water as coolant.
Additional information and notes on other coolants are provided in the SINAMICS Low Voltage Engineering Manual.

5) Total sound pressure level of Active Interface Module and Active Line Module.

6) Total of all motor cables and DC link. Longer cable lengths for specific configurations are available on request.

7) Current required to ensure reliable tripping of installed protective devices.

© Siemens 2024

Overview

Active Line Connection Modules compact comprise a liquid-cooled Active Interface Module and a liquid-cooled Active Line Module. They can supply motoring energy to the DC link and return regenerative energy to the line supply.

As standard, the Active Line Connection Module compact is positioned in the drive line-up so that the Motor Modules are arranged to the right. If Motor Modules are to be arranged to the left of the Active Line Connection Module compact, option **M88** (DC bus system for line-side Cabinet Modules) must be ordered. **The line-side infeed via the main switch with fuse switch disconnector or circuit breaker must be implemented on the plant/system side.**

The Active Interface Module is equipped as standard with a radio interference suppression filter according to EN 61800-3 Category C3.

Active Line Connection Modules compact generate a controlled DC voltage that is kept constant regardless of line voltage fluctuations (the line voltage must remain within the permissible tolerances).

In the factory setting, the DC voltage is regulated to 1.5 times the rms value of the rated line voltage.

Active Line Connection Modules draw an almost sinusoidal current from the line supply and cause virtually no line harmonics.

Active Line Connection Modules compact are suitable for connection to supply systems grounded at the neutral point (TN, TT) and non-grounded (IT) supply systems. The following voltages and currents are available:

Line voltage	Rated infeed/ regenerative feedback current	Rated power
380 ... 480 V 3 AC	605 ... 1405 A	380 ... 900 kW
500 ... 690 V 3 AC	735 ... 1560 A	800 ... 1700 kW

Design

Active Line Connection Module compact always includes an Active Interface Module, which contains the associated Clean Power Filter and pre-charging circuit. The line filter that is included ensures compliance with the EMC requirements for the "second environment".

The power rating can be increased by connecting Active Line Connection Modules compact in parallel. You must observe the following rules:

- Up to four identical Active Line Connection Modules compact can be connected in parallel
- A common Control Unit is required whenever the modules are connected in parallel.
- The parallel connection must be supplied from a common infeed point (i.e. the modules cannot be operated on different line supplies).
- A derating factor of 5% must be taken into consideration, regardless of the number of modules connected in parallel.
- The main contactors or circuit breakers of the respective Line Connection Modules must close together and simultaneously. Monitoring is performed via the -X50 terminals of the respective Line Connection Module

For additional information, please refer to the SINAMICS Low Voltage Engineering Manual.

Selection and ordering data

Rated power at 400 V or 690 V	Rated DC link current	**Active Line Connection Module compact**
kW	A	Article No.
Line voltage 380 ... 480 V 3 AC (DC link voltage 570 ... 720 V DC)		
380	677	**6SL3735-7TE36-1MA3**
500	941	**6SL3735-7TE38-4MA3**
630	1100	**6SL3735-7TE41-0MA3**
900	1573	**6SL3735-7TE41-4MA3**
Line voltage 500 ... 690 V 3 AC (DC link voltage 750 ... 1035 V DC)		
800	823	**6SL3735-7TG37-4MA3**
900	907	**6SL3735-7TG38-1MA3**
1100	1147	**6SL3735-7TG41-0MA3**
1400	1422	**6SL3735-7TG41-3MA3**
1400	1422	**6SL3735-7TG41-3MA4**
1700	1740	**6SL3735-7TG41-6MA3**
1700	1710	**6SL3735-7TG41-6MA4**

© Siemens 2024

Integration

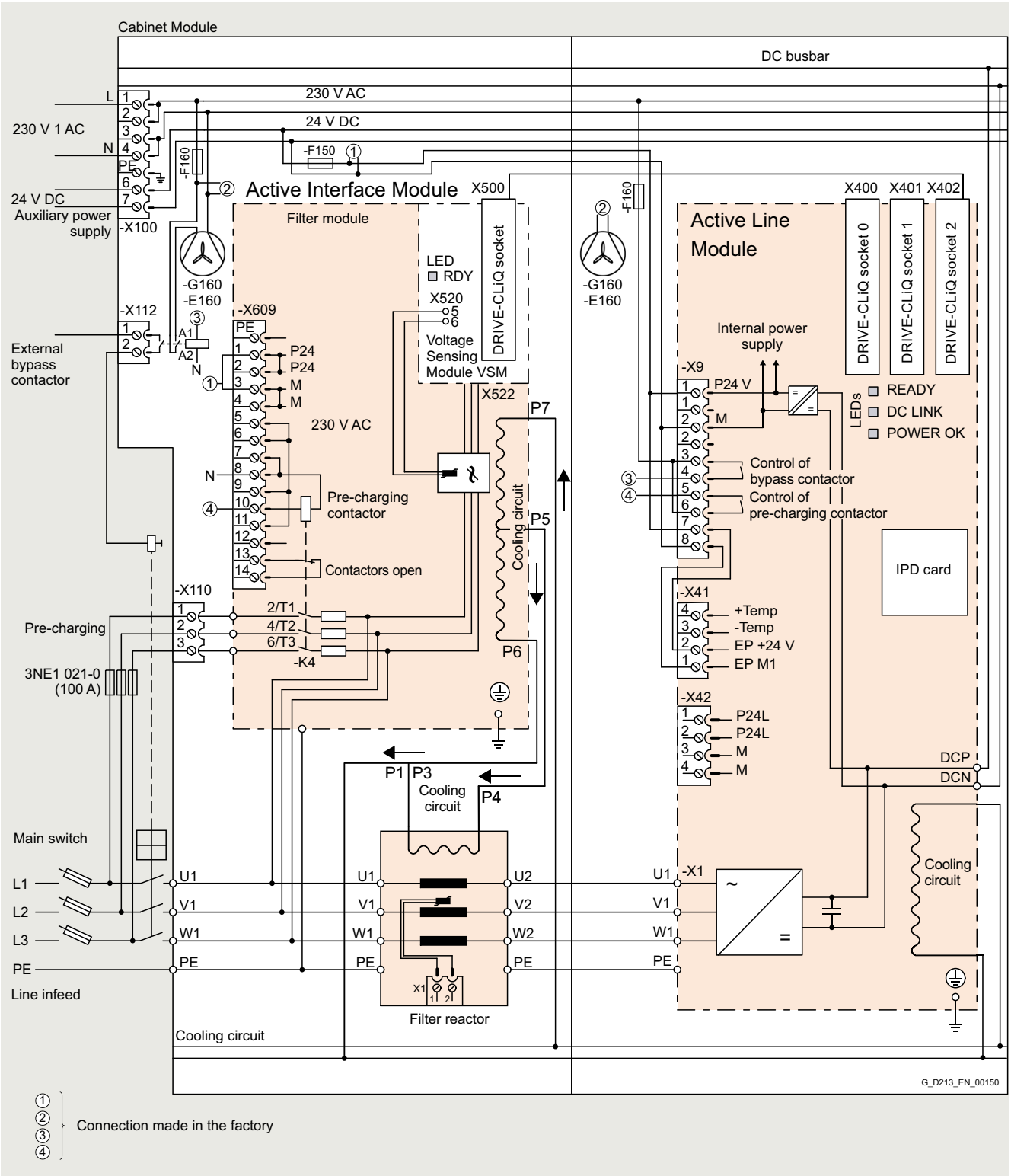

Connection example, Active Line Connection Module compact liquid-cooled, parallel cooling circuit in the Active Interface Module

© Siemens 2024

Integration

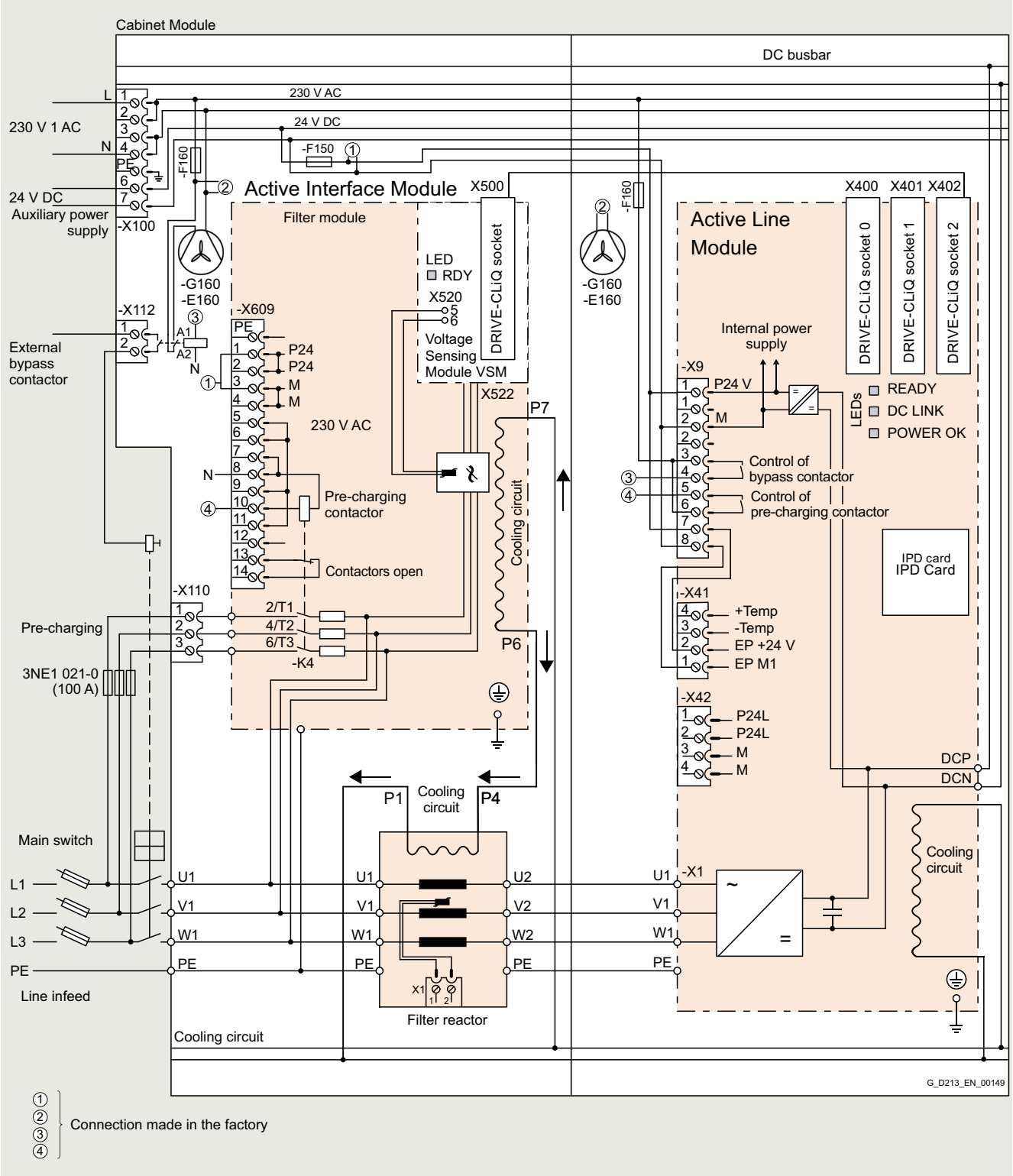

Connection example, Active Line Connection Module compact liquid-cooled, serial cooling circuit in the Active Interface Module

© Siemens 2024

Technical specifications

Line voltage 380 ... 480 V 3 AC		Active Line Connection Modules compact			
		6SL3735-7TE36-1MA3	6SL3735-7TE38-4MA3	6SL3735-7TE41-0MA3	6SL3735-7TE41-4MA3
Rated power					
• At $I_{N\,DC}$ (50 Hz 400 V)	kW	**380**	**500**	**630**	**900**
• At $I_{H\,DC}$ (50 Hz 400 V)	kW	335	465	545	780
• At $I_{N\,DC}$ (60 Hz 460 V)	hp	600	700	900	1250
• At $I_{H\,DC}$ (60 Hz 460 V)	hp	500	700	800	1000
DC link current					
• Rated current $I_{N\,DC}$	A	677	941	1100	1573
• Base-load current $I_{H\,DC}$ [1]	A	603	837	982	1401
• Maximum current $I_{max\,DC}$	A	1017	1410	1654	2361
Infeed/regenerative feedback current					
• Rated current $I_{N\,I}$	A	605	840	985	1405
• Maximum current $I_{max\,I}$	A	907	1260	1477	2055
Current demand					
• 24 V DC auxiliary power supply	A	1.77	1.77	1.7	1.7
• 230 V 1 AC	A	1.2	1.2	1.2	1.2
DC link capacitance					
• Active Line Module	µF	12600	17400	18900	28800
• Drive line-up, max.	µF	134400	134400	230400	230400
Power loss, max. [2]					
at 50 Hz 400 V					
• Degree of protection <IP55					
- Dissipated to coolant	kW	10.9	11.7	19.6	21.8
- Dissipated to ambient air	kW	2.0	2.1	2.8	3.4
• Degree of protection IP55					
- Dissipated to coolant	kW	11.8	12.9	21.5	24.3
- Dissipated to ambient air	kW	0.9	0.9	0.9	0.9
Coolant volume flow [3] Degree of protection <IP55/IP55	l/min (US gal./min)	26/53 (6.87/14.0)	26/53 (6.87/14.0)	43/70 (11.4/18.5)	43/70 (11.4/18.5)
Liquid volume Degree of protection <IP55/IP55	dm^3	13/16.6	13/16.6	14/17.6	14/17.6
Pressure drop, max. [4] for volume flow	Pa	150000	150000	150000	150000
Heat exchanger material					
• Active Line Module		Aluminum	Aluminum	Aluminum	Aluminum
• Active Interface Module		Aluminum	Aluminum	Aluminum	Aluminum
Sound pressure level L_{pA} [5] (1 m) at 50/60 Hz	dB	65/65	65/65	65/65	65/65
Line supply connection		5/M12	5/M12	5/M12	5/M12
L1, L2, L3					
• Conductor cross-section, max. (IEC)	mm^2	4 × 185	4 × 185	10 × 185	10 × 185
PE/GND connection		PE bar	PE bar	PE bar	PE bar
• Busbar cross-section	mm^2	600	600	600	600
• Conductor cross-section, max. (IEC)	mm^2	240	240	240	240
Cable length, max. [6] Shielded/unshielded	m (ft)	3900/5850 (12795/19193)	3900/5850 (12795/19193)	3900/5850 (12795/19193)	3900/5850 (12795/19193)
Degree of protection (standard version)		IP21	IP21	IP21	IP21
Dimensions					
• Width	mm (in)	1200 (47.2)	1200 (47.2)	1200 (47.2)	1200 (47.2)
• Height	mm (in)	2200 (86.6)	2200 (86.6)	2200 (86.6)	2200 (86.6)
• Depth	mm (in)	600 (23.6)	600 (23.6)	600 (23.6)	600 (23.6)
Weight, approx. (standard version)	kg (lb)	841 (1854)	841 (1854)	1027 (2265)	1027 (2265)
Frame size					
• Active Interface Module		JIL	JIL	JIL	JIL
• Active Line Module		HXL	HXL	JXL	JXL
Rated short-circuit current according to IEC	kA	65	84	84	100
Minimum short-circuit current [7]	kA	9.2	10.4	16	21

1) The base-load current $I_{H\,DC}$ is the basis for a duty cycle of 150 % for 60 s or $I_{max\,DC}$ for 5 s with a duty cycle duration of 300 s.

2) The specified power loss represents the maximum value at 100 % utilization. The value is lower under normal operating conditions.

3) The value applies to coolants comprising water and a mixture of water and antifreeze agent.

4) The value is valid for water as coolant.
Additional information and notes on other coolants are provided in the SINAMICS Low Voltage Engineering Manual.

5) Total sound pressure level of Active Interface Module and Active Line Module.

6) Total of all motor cables and DC link. Longer cable lengths for specific configurations are available on request.

7) Current required for reliably triggering protective devices (additional information see Equipment manual SINAMICS S120 Cabinet Modules liquid cooled).

© Siemens 2024

Technical specifications

Line voltage 500 ... 690 V 3 AC		Active Line Connection Modules compact			
		6SL3735-7TG37-4MA3	6SL3735-7TG38-1MA3	6SL3735-7TG41-0MA3	6SL3735-7TG41-3MA3
Rated power					
• At $I_{N\,DC}$ (50 Hz 690 V)	kW	**800**	**900**	**1100**	**1400**
• At $I_{H\,DC}$ (50 Hz 690 V)	kW	705	670	1000	1215
• At $I_{N\,DC}$ (50 Hz 500 V)	kW	560	620	780	965
• At $I_{H\,DC}$ (50 Hz 500 V)	kW	510	485	710	880
• At $I_{N\,DC}$ (60 Hz 575 V)	hp	900	975	1250	1500
• At $I_{H\,DC}$ (60 Hz 575 V)	hp	600	765	1000	1250
DC link current					
• Rated current $I_{N\,DC}$	A	823	907	1147	1422
• Base-load current $I_{H\,DC}$ [1]	A	732	808	936	1266
• Maximum current $I_{max\,DC}$	A	1235	1360	1722	2133
Infeed/regenerative feedback current					
• Rated current $I_{N\,I}$	A	735	810	1025	1270
• Maximum current $I_{max\,I}$	A	1100	1214	1537	1905
Current demand					
• 24 V DC auxiliary power supply	A	1.7	1.7	1.7	1.7
• 230 V 1 AC	A	1.2	1.2	1.2	1.2
DC link capacitance					
• Active Line Module	µF	10500	10500	16000	19330
• Drive line-up, max.	µF	153600	153600	153600	153600
Power loss, max. [2] at 50 Hz 400 V					
• Degree of protection <IP55					
- Dissipated to coolant	kW	17.0	19.5	21.6	27.3
- Dissipated to ambient air	kW	2.0	2.2	2.8	3.3
• Degree of protection IP55					
- Dissipated to coolant	kW	18.0	20.7	23.4	29.7
- Dissipated to ambient air	kW	0.9	0.9	0.9	0.9
Coolant volume flow [3] Degree of protection <IP55/IP55	l/min (US gal./min)	26/53 (6.87/14.0)	26/53 (6.87/14.0)	37/64 (9.78/16.9)	37/64 (9.78/16.9)
Liquid volume Degree of protection <IP55/IP55	dm^3	13/16.6	14/17.6	14/17.6	14/17.6
Pressure drop, max. [4] for volume flow	Pa	150000	150000	150000	150000
Heat exchanger material					
• Active Line Module		Aluminum	Aluminum	Aluminum	Aluminum
• Active Interface Module		Aluminum	Aluminum	Aluminum	Aluminum
Sound pressure level L_{pA} [5] (1 m) at 50/60 Hz	dB	65/65	65/65	65/65	65/65
Line supply connection L1, L2, L3		5/M12	5/M12	5/M12	5/M12
• Conductor cross-section, max. (IEC)	mm^2	10 × 185	10 × 185	10 × 185	10 × 185
PE/GND connection		PE bar	PE bar	PE bar	PE bar
• Busbar cross-section	mm^2	600	600	600	600
• Conductor cross-section, max. (IEC)	mm^2	240	240	240	240
Cable length, max. [6] Shielded/unshielded	m (ft)	2250/3375 (7382/11073)	2250/3375 (7382/11073)	2250/3375 (7382/11073)	2250/3375 (7382/11073)
Degree of protection (standard version)		IP21	IP21	IP21	IP21
Dimensions					
• Width	mm (in)	1200 (47.2)	1200 (47.2)	1200 (47.2)	1200 (47.2)
• Height	mm (in)	2200 (86.6)	2200 (86.6)	2200 (86.6)	2200 (86.6)
• Depth	mm (in)	600 (23.6)	600 (23.6)	600 (23.6)	600 (23.6)
Weight, approx. (standard version)	kg (lb)	937 (2066)	942 (2077)	1077 (2375)	1077 (2375)
Frame size					
• Active Interface Module		JIL	JIL	JIL	JIL
• Active Line Module		HXL	HXL	JXL	JXL
Rated short-circuit current according to IEC	kA	84	100	100	100
Minimum short-circuit current [7]	kA	8.4	10.5	12.6	20

1) The base-load current $I_{H\,DC}$ is the basis for a duty cycle of 150 % for 60 s or $I_{max\,DC}$ for 5 s with a duty cycle duration of 300 s.

2) The specified power loss represents the maximum value at 100 % utilization. The value is lower under normal operating conditions.

3) The value applies to coolants comprising water and a mixture of water and antifreeze agent.

4) The value is valid for water as coolant.
Additional information and notes on other coolants are provided in the SINAMICS Low Voltage Engineering Manual.

5) Total sound pressure level of Active Interface Module and Active Line Module.

6) Total of all motor cables and DC link. Longer cable lengths for specific configurations are available on request.

7) Current required for reliably triggering protective devices (additional information see Equipment manual SINAMICS S120 Cabinet Modules liquid cooled).

© Siemens 2024

Technical specifications

Line voltage 500 ... 690 V 3 AC		Active Line Connection Modules compact		
		6SL3735-7TG41-3MA4 [8]	6SL3735-7TG41-6MA3	6SL3735-7TG41-6MA4 [8]
Rated power				
• At $I_{N\,DC}$ (50 Hz 690 V)	kW	**1400**	**1700**	**1700**
• At $I_{H\,DC}$ (50 Hz 690 V)	kW	1215	1490	1490
• At $I_{N\,DC}$ (50 Hz 500 V)	kW	965	1180	1180
• At $I_{H\,DC}$ (50 Hz 500 V)	kW	880	1080	1080
• At $I_{N\,DC}$ (60 Hz 575 V)	hp	1500	1855	1855
• At $I_{H\,DC}$ (60 Hz 575 V)	hp	1250	1530	1530
DC link current				
• Rated current $I_{N\,DC}$	A	1422	1740	1740
• Base-load current $I_{H\,DC}$ [1]	A	1266	1550	1550
• Maximum current $I_{max\,DC}$	A	2133	2620	2620
Infeed/regenerative feedback current				
• Rated current $I_{N\,I}$	A	1270	1560	1560
• Maximum current $I_{max\,I}$	A	1905	2055	2055
Current demand				
• 24 V DC auxiliary power supply	A	1.7	1.7	1.7
• 230 V 1 AC	A	1.2	1.2	1.2
DC link capacitance				
• Active Line Module	µF	19330	21000	21000
• Drive line-up, max.	µF	153600	210000	210000
Power loss, max. [2] at 50 Hz 400 V				
• Degree of protection <IP55				
- Dissipated to coolant	kW	29.5	36.7	40.2
- Dissipated to ambient air	kW	4.0	4.0	4.0
• Degree of protection IP55				
- Dissipated to coolant	kW	31.9	39.8	43.3
- Dissipated to ambient air	kW	0.9	0.9	0.9
Coolant volume flow [3] Degree of protection <IP55/IP55	l/min (US gal./min)	52/79 (13.74/20.87)	43/70 (11.4/18.5)	52/79 (13.74/20.87)
Liquid volume Degree of protection <IP55/IP55	dm^3	14/17.6	14/17.6	14/17.6
Pressure drop, max. [4] for volume flow	Pa	150000	150000	150000
Heat exchanger material				
• Active Line Module		Aluminum	Aluminum	Aluminum
• Active Interface Module		Aluminum	Aluminum	Aluminum
Sound pressure level L_{pA} [5] (1 m) at 50/60 Hz	dB	65/65	65/65	65/65
Line supply connection L1, L2, L3		5/M12	5/M12	5/M12
• Conductor cross-section, max. (IEC)	mm^2	10 × 185	10 × 185	10 × 185
PE/GND connection		PE bar	PE bar	PE bar
• Busbar cross-section	mm^2	600	600	600
• Conductor cross-section, max. (IEC)	mm^2	240	240	240
Cable length, max. [6] Shielded/unshielded	m (ft)	2250/3375 (7382/11073)	2250/3375 (7382/11073)	2250/3375 (7382/11073)
Degree of protection (standard version)		IP21	IP21	IP21
Dimensions				
• Width	mm (in)	1200 (47.2)	1200 (47.2)	1200 (47.2)
• Height	mm (in)	2200 (86.6)	2200 (86.6)	2200 (86.6)
• Depth	mm (in)	600 (23.6)	600 (23.6)	600 (23.6)
Weight, approx. (standard version)	kg (lb)	1077 (2375)	1177 (2595)	1177 (2595)
Frame size				
• Active Interface Module		JIL	JIL	JIL
• Active Line Module		JXL	JXL	JXL
Rated short-circuit current according to IEC	kA	100	100	100
Minimum short-circuit current [7]	kA	20	24	24

1) The base-load current $I_{H\,DC}$ is the basis for a duty cycle of 150 % for 60 s or $I_{max\,DC}$ for 5 s with a duty cycle duration of 300 s.

2) The specified power loss represents the maximum value at 100 % utilization. The value is lower under normal operating conditions.

3) The value applies to coolants comprising water and a mixture of water and antifreeze agent.

4) The value is valid for water as coolant.
Additional information and notes on other coolants are provided in the SINAMICS Low Voltage Engineering Manual.

5) Total sound pressure level of Active Interface Module and Active Line Module.

6) Total of all motor cables and DC link. Longer cable lengths for specific configurations are available on request.

7) Current required for reliably triggering protective devices (additional information see Equipment manual SINAMICS S120 Cabinet Modules liquid cooled).

8) These devices have the shaft generator drive function (Shaft Generator Drive, SGD). Further information on this can be found in the line infeed system manual.

© Siemens 2024

Overview

Motor Modules are available in the power range from 90 kW to 1500 kW.

Line voltage	DC link voltage	Type rating
380 ... 480 V 3 AC	510 ... 720 V DC	110 ... 800 kW
500 ... 690 V 3 AC	675 ... 1035 V DC	90 ... 1500 kW

By connecting in parallel up to four Motor Modules, which are operated on one Control Unit and supply one motor, it is possible to increase the available shaft power to max. approx. 5700 kW (taking into account the derating factors according to the SINAMICS Low Voltage Engineering Manual).

The Motor Modules can also be used as Braking Modules (braking chopper) if a 3-phase braking resistor is connected instead of a motor.
Further information can be found in the SINAMICS Low Voltage Engineering Manual.

Design

Motor Modules contain the following components as standard:

- Retaining device for the DC busbar, including the connection to the DC connections of the Motor Module
- Connection busbars, nickel-plated
  - on Motor Modules, frame size JXL, the connection for the motor cables is routed to the right of the device
  - on Motor Modules, frame size HXL, the connection is underneath the device
- Cable retaining bar for the power cables
- DRIVE-CLiQ interface (three DRIVE-CLiQ sockets), without Control Unit
- Auxiliary power supply system (4-pole) for the auxiliary power supply, including cable connections for looping through to the next Cabinet Module
- Nickel-plated PE busbar (60 x 10 mm), including jumper for looping through to the next Cabinet Module
- EMC-compliant design thanks to additional shielding measures and appropriately routed cables

Selection and ordering data

Type rating at 400 V or 690 V	Rated output current I_N	**Motor Module**
kW	A	Article No.
Line voltage 380 ... 480 V 3 AC (DC link voltage 510 ... 720 V DC)		
110	210	**6SL3725-1TE32-1AA3**
132	260	**6SL3725-1TE32-6AA3**
160	310	**6SL3725-1TE33-1AA3**
250	490	**6SL3725-1TE35-0AA3**
315	605	**6SL3725-1TE36-1AA3**
400	745	**6SL3725-1TE37-5AA3**
450	840	**6SL3725-1TE38-4AA3**
560	985	**6SL3725-1TE41-0AA3**
710	1260	**6SL3725-1TE41-2AA3**
800	1405	**6SL3725-1TE41-4AA3**
800	1330	**6SL3725-1TE41-4AS3**
Line voltage 500 ... 690 V 3 AC (DC link voltage 675 ... 1035 V DC)		
90	100	**6SL3725-1TG31-0AA3**
132	150	**6SL3725-1TG31-5AA3**
200	215	**6SL3725-1TG32-2AA3**
315	330	**6SL3725-1TG33-3AA3**
450	465	**6SL3725-1TG34-7AA3**
560	575	**6SL3725-1TG35-8AA3**
710	735	**6SL3725-1TG37-4AA3**
800	810	**6SL3725-1TG38-0AA3**
800	810	**6SL3725-1TG38-1AA3**
1000	1025	**6SL3725-1TG41-0AA3**
1200	1270	**6SL3725-1TG41-3AA3**
1500	1560	**6SL3725-1TG41-6AP3**

© Siemens 2024

Integration

Motor Modules are controlled by the CU320-2 DP or CU320-2 PN Control Unit. Communication between the Control Unit and Modules is established via a DRIVE-CLiQ connection.

If the Control Unit is integrated in the same cabinet as an option with order code **K90** or **K95**, these communication cables will already be installed. If the Control Unit is to be mounted externally, the DRIVE-CLiQ cable will not be included in the scope of supply and must be configured on site.

For additional information, please refer to the SINAMICS Low Voltage Engineering Manual.

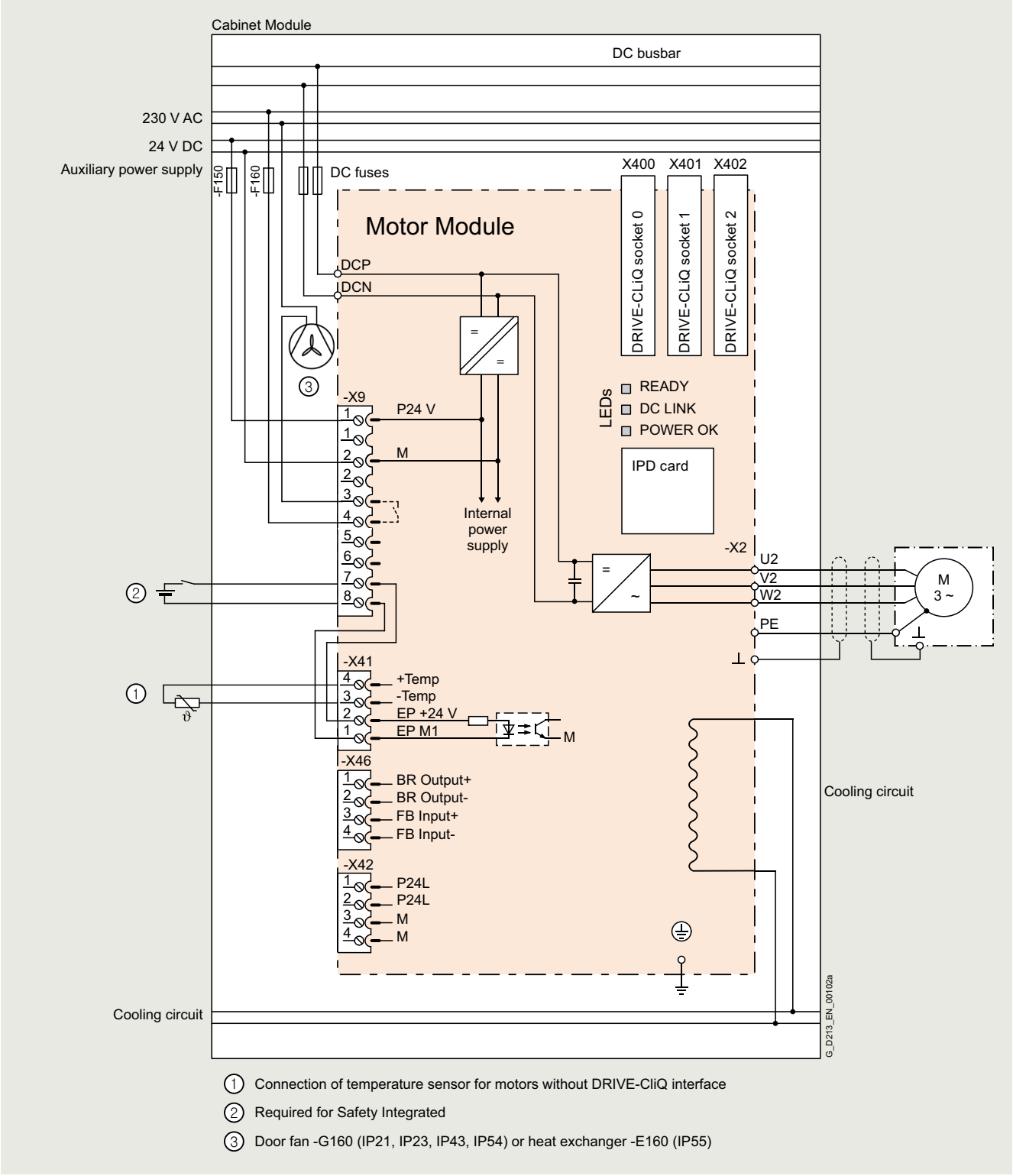

Connection example of a Motor Module, liquid-cooled

© Siemens 2024

Technical specifications

Line voltage 380 ... 480 V 3 AC		Motor Modules			
DC link voltage 510 ... 720 V DC		6SL3725-1TE32-1AA3	6SL3725-1TE32-6AA3	6SL3725-1TE33-1AA3	6SL3725-1TE35-0AA3
Type rating					
• At I_L (50 Hz 400 V) [1]	kW	**110**	**132**	**160**	**250**
• At I_H (50 Hz 400 V) [1]	kW	90	110	132	200
• At I_L (60 Hz 460 V) [2]	hp	150	200	250	400
• At I_H (60 Hz 460 V) [2]	hp	150	200	200	350
Output current					
• Rated current $I_{N\,O}$	A	210	260	310	490
• Base-load current I_L [3]	A	205	250	302	477
• Base-load current I_H [4]	A	178	233	277	438
• Maximum current $I_{max\,O}$	A	307	375	453	715
DC link current					
• Rated current $I_{N\,DC}$ when supplied via					
- Basic Line Module	A	256	317	380	600
- Active Line Module	A	230	287	340	538
• Base-load current $I_{L\,DC}$ [3] when supplied via					
- Basic Line Module	A	250	305	368	581
- Active Line Module	A	225	274	331	522
• Base-load current $I_{H\,DC}$ [4] when supplied via					
- Basic Line Module	A	227	284	338	534
- Active Line Module	A	195	255	303	480
Current demand					
• 24 V DC auxiliary power supply	A	1.3	1.3	1.3	1.3
• 230 V 1 AC	A	0.6	0.6	0.6	0.6
DC link capacitance	µF	4800	5800	8400	9600
Pulse frequency [5]					
• Rated frequency	kHz	2	2	2	2
• Pulse frequency, max.					
- Without current derating	kHz	2	2	2	2
- With current derating	kHz	8	8	8	8
Power loss, max. [6] at 50 Hz 400 V					
• Degree of protection <IP55					
- Dissipated to coolant	kW	1.6	1.9	2.2	3.4
- Dissipated to ambient air	kW	0.2	0.2	0.2	0.3
• Degree of protection IP55					
- Dissipated to coolant	kW	1.7	2.1	2.4	3.8
- Dissipated to ambient air	kW	0.2	0.2	0.2	0.2
Coolant volume flow [7] All degrees of protection	l/min (US gal./min)	9 (2.38)	9 (2.38)	12 (3.17)	12 (3.17)
Liquid volume Degree of protection <IP55/IP55	dm^3	2.9/4.7	2.9/4.7	3.5/5.3	3.5/5.3
Pressure drop, max. [8] for volume flow	Pa	150000	150000	150000	150000
Heat exchanger material		Stainless steel	Stainless steel	Stainless steel	Stainless steel
Sound pressure level L_{pA} (1 m) at 50/60 Hz	dB	52	52	52	52
Motor connection U2, V2, W2		M12	M12	M12	M12
• Conductor cross-section, max. (IEC)	mm^2	2 × 95	2 × 95	2 × 240	2 × 240
PE/GND connection		PE bar	PE bar	PE bar	PE bar
• Busbar cross-section	mm^2	600	600	600	600
• Conductor cross-section, max. (IEC)	mm^2	240	240	240	240
Cable length, max. [9] Shielded/unshielded	m (ft)	300/450 (984/1476)	300/450 (984/1476)	300/450 (984/1476)	300/450 (984/1476)
Degree of protection (standard version)		IP21	IP21	IP21	IP21
Dimensions					
• Width	mm (in)	400 (15.75)	400 (15.75)	400 (15.75)	400 (15.75)
• Height	mm (in)	2200 (86.61)	2200 (86.61)	2200 (86.61)	2200 (86.61)
• Depth	mm (in)	600 (23.62)	600 (23.62)	600 (23.62)	600 (23.62)
Weight, approx.	kg (lb)	280 (617)	280 (617)	320 (706)	320 (706)
Frame size		FXL	FXL	GXL	GXL
Rated short-circuit current according to IEC	kA	65	65	65	65

[1] Rated power of a typical 6-pole standard induction motor based on I_L or I_H for 400 V 3 AC 50 Hz.

[2] Rated power of a typical 6-pole standard induction motor based on I_L or I_H for 460 V 3 AC 60 Hz.

[3] The base-load current I_L is based on a duty cycle of 110 % for 60 s or 150 % for 10 s with a duty cycle duration of 300 s.

[4] The base-load current I_H is based on a duty cycle of 150 % for 60 s or 160 % for 10 s with a duty cycle duration of 300 s.

[5] Information regarding the correlation between the pulse frequency and max. output current/output frequency is provided in the SINAMICS Low Voltage Engineering Manual.

[6] The specified power loss represents the maximum value at 100 % utilization. The value is lower under normal operating conditions.

[7] The value applies to coolants comprising water and a mixture of water and antifreeze agent.

[8] The value is valid for water as coolant.
Additional information and notes on other coolants are provided in the SINAMICS Low Voltage Engineering Manual.

[9] Total of all motor cables. Longer cable lengths for specific configurations are available on request.For additional information, please refer to the SINAMICS Low Voltage Engineering Manual.

© Siemens 2024

Technical specifications

Line voltage 380 ... 480 V 3 AC **DC link voltage 510 ... 720 V DC**		**Motor Modules** 6SL3725-1TE36-1AA3	6SL3725-1TE37-5AA3	6SL3725-1TE38-4AA3
Type rating				
• At I_L (50 Hz 400 V) [1]	kW	**315**	**400**	**450**
• At I_H (50 Hz 400 V) [1]	kW	250	315	400
• At I_L (60 Hz 460 V) [2]	hp	500	600	700
• At I_H (60 Hz 460 V) [2]	hp	350	450	600
Output current				
• Rated current $I_{N\,O}$	A	605	745	840
• Base-load current I_L [3]	A	590	725	820
• Base-load current I_H [4]	A	460	570	700
• Maximum current $I_{max\,O}$	A	885	1087	1230
DC link current				
• Rated current $I_{N\,DC}$ when supplied via				
- Basic Line Module	A	738	894	1025
- Active Line Module	A	664	805	922
• Base-load current $I_{L\,DC}$ [3] when supplied via				
- Basic Line Module	A	719	871	1000
- Active Line Module	A	646	784	898
• Base-load current $I_{H\,DC}$ [4] when supplied via				
- Basic Line Module	A	561	795	853
- Active Line Module	A	504	716	767
Current demand				
• 24 V DC auxiliary power supply	A	1.5	1.5	1.5
• 230 V 1 AC	A	0.6	0.6	0.6
DC link capacitance	µF	12600	17400	17400
Pulse frequency [5]				
• Rated frequency	kHz	1.25	1.25	1.25
• Pulse frequency, max.				
- Without current derating	kHz	1.25	1.25	1.25
- With current derating	kHz	8	8	8
Power loss, max. [6] at 50 Hz 400 V				
• Degree of protection <IP55				
- Dissipated to coolant	kW	4.6	5.2	5.5
- Dissipated to ambient air	kW	0.6	0.7	0.8
• Degree of protection IP55				
- Dissipated to coolant	kW	5.0	5.7	6.2
- Dissipated to ambient air	kW	0.2	0.2	0.2
Coolant volume flow [7] All degrees of protection	l/min (US gal./min)	16 (4.23)	16 (4.23)	16 (4.23)
Liquid volume Degree of protection <IP55/IP55	dm^3	3.3/5.1	3.3/5.1	3.3/5.1
Pressure drop, max. [8] for volume flow	Pa	150000	150000	150000
Heat exchanger material		Aluminum	Aluminum	Aluminum
Sound pressure level L_{pA} (1 m) at 50/60 Hz	dB	54	54	54
Motor connection U2, V2, W2		2/M12	2/M12	2/M12
• Conductor cross-section, max. (IEC)	mm^2	4 × 185	4 × 185	4 × 185
PE/GND connection		PE bar	PE bar	PE bar
• Busbar cross-section	mm^2	600	600	600
• Conductor cross-section, max. (IEC)	mm^2	240	240	240
Cable length, max. [9] Shielded/unshielded	m (ft)	300/450 (984/1476)	300/450 (984/1476)	300/450 (984/1476)
Degree of protection (standard version)		IP21	IP21	IP21
Dimensions				
• Width	mm (in)	400 (15.75)	400 (15.75)	400 (15.75)
• Height	mm (in)	2200 (86.61)	2200 (86.61)	2200 (86.61)
• Depth	mm (in)	600 (23.62)	600 (23.62)	600 (23.62)
Weight, approx.	kg (lb)	350 (772)	350 (772)	350 (772)
Frame size		HXL	HXL	HXL
Rated short-circuit current according to IEC	kA	65	65	84

1) Rated power of a typical 6-pole standard induction motor based on I_L or I_H for 400 V 3 AC 50 Hz.

2) Rated power of a typical 6-pole standard induction motor based on I_L or I_H for 460 V 3 AC 60 Hz.

3) The base-load current I_L is based on a duty cycle of 110 % for 60 s or 150 % for 10 s with a duty cycle duration of 300 s.

4) The base-load current I_H is based on a duty cycle of 150 % for 60 s or 160 % for 10 s with a duty cycle duration of 300 s.

5) Information regarding the correlation between the pulse frequency and max. output current/output frequency is provided in the SINAMICS Low Voltage Engineering Manual.

6) The specified power loss represents the maximum value at 100 % utilization. The value is lower under normal operating conditions.

7) The value applies to coolants comprising water and a mixture of water and antifreeze agent.

8) The value is valid for water as coolant.
Additional information and notes on other coolants are provided in the SINAMICS Low Voltage Engineering Manual.

9) Total of all motor cables. Longer cable lengths for specific configurations are available on request.For additional information, please refer to the SINAMICS Low Voltage Engineering Manual.

© Siemens 2024

Technical specifications

Line voltage 380 ... 480 V 3 AC		Motor Modules			
DC link voltage 510 ... 720 V DC		6SL3725-1TE41-0AA3	6SL3725-1TE41-2AA3	6SL3725-1TE41-4AA3	6SL3725-1TE41-4AS3 [10]
Type rating					
• At I_L (50 Hz 400 V) [1]	kW	**560**	**710**	**800**	**800**
• At I_H (50 Hz 400 V) [1]	kW	450	630	710	630
• At I_L (60 Hz 460 V) [2]	hp	800	1000	1150	1000
• At I_H (60 Hz 460 V) [2]	hp	700	900	1000	900
Output current					
• Rated current $I_{N\,O}$	A	985	1260	1405	1330
• Base-load current I_L [3]	A	960	1230	1370	1310
• Base-load current I_H [4]	A	860	1127	1257	1150
• Maximum current $I_{max\,O}$	A	1440	1845	2055	2055
DC link current					
• Rated current $I_{N\,DC}$ when supplied via					
- Basic Line Module	A	1202	1512	1714	1550
- Active Line Module	A	1080	1361	1544	1403
• Base-load current $I_{L\,DC}$ [3] when supplied via					
- Basic Line Module	A	1170	1474	1670	1525
- Active Line Module	A	1051	1326	1500	1405
• Base-load current $I_{H\,DC}$ [4] when supplied via					
- Basic Line Module	A	1048	1345	1532	1676
- Active Line Module	A	942	1211	1377	1403
Current demand					
• 24 V DC auxiliary power supply	A	1.5	1.5	1.5	1.5
• 230 V 1 AC	A	0.6	0.6	0.6	0.6
DC link capacitance	µF	21000	29000	29000	21000
Pulse frequency [5]					
• Rated frequency	kHz	1.25	1.25	1.25	2
• Pulse frequency, max.					
- Without current derating	kHz	1.25	1.25	1.25	2
- With current derating	kHz	8	8	8	4
Power loss, max. [6] at 50 Hz 400 V					
• Degree of protection <IP55					
- Dissipated to coolant	kW	7.5	8.6	9.5	10.2
- Dissipated to ambient air	kW	1.0	1.3	1.5	1.4
• Degree of protection IP55					
- Dissipated to coolant	kW	8.3	9.6	10.7	11.3
- Dissipated to ambient air	kW	0.2	0.3	0.3	0.3
Coolant volume flow [7] All degrees of protection	l/min (US gal./min)	27 (7.13)	27 (7.13)	27 (7.13)	27 (7.13)
Liquid volume Degree of protection <IP55/IP55	dm^3	5.2/7	5.2/7	5.2/7	5.2/7
Pressure drop, max. [8] for volume flow	Pa	150000	150000	150000	150000
Heat exchanger material		Aluminum	Aluminum	Aluminum	Aluminum
Sound pressure level L_{pA} (1 m) at 50/60 Hz	dB	56	56	56	56
Motor connection U2, V2, W2		2/M12	2/M12	2/M12	2/M12
• Conductor cross-section, max. (IEC)	mm^2	4 × 240	4 × 240	4 × 240	4 × 240
PE/GND connection		PE bar	PE bar	PE bar	PE bar
• Busbar cross-section	mm^2	600	600	600	600
• Conductor cross-section, max. (IEC)	mm^2	240	240	240	240
Cable length, max. [9] Shielded/unshielded	m (ft)	300/450 (984/1476)	300/450 (984/1476)	300/450 (984/1476)	300/450 (984/1476)
Degree of protection (standard version)		IP21	IP21	IP21	IP21
Dimensions					
• Width	mm (in)	600 (23.62)	600 (23.62)	600 (23.62)	600 (23.62)
• Height	mm (in)	2200 (86.61)	2200 (86.61)	2200 (86.61)	2200 (86.61)
• Depth	mm (in)	600 (23.62)	600 (23.62)	600 (23.62)	600 (23.62)
Weight, approx.	kg (lb)	460 (1014)	460 (1014)	460 (1014)	470 (1036)
Frame size		JXL	JXL	JXL	JXL
Rated short-circuit current according to IEC	kA	84	100	100	100

1) Rated power of a typical 6-pole standard induction motor based on I_L or I_H for 400 V 3 AC 50 Hz.

2) Rated power of a typical 6-pole standard induction motor based on I_L or I_H for 460 V 3 AC 60 Hz.

3) The base-load current I_L is based on a duty cycle of 110 % for 60 s or 150 % for 10 s with a duty cycle duration of 300 s.

4) The base-load current I_H is based on a duty cycle of 150 % for 60 s or 160 % for 10 s with a duty cycle duration of 300 s.

5) Information regarding the correlation between the pulse frequency and max. output current/output frequency is provided in the SINAMICS Low Voltage Engineering Manual.

6) The specified power loss represents the maximum value at 100 % utilization. The value is lower under normal operating conditions.

7) The value applies to coolants comprising water and a mixture of water and antifreeze agent.

8) The value is valid for water as coolant.
Additional information and notes on other coolants are provided in the SINAMICS Low Voltage Engineering Manual.

9) Total of all motor cables. Longer cable lengths for specific configurations are available on request.For additional information, please refer to the SINAMICS Low Voltage Engineering Manual.

10) This Motor Module has been specifically designed for loads demanding a high dynamic performance. The derating factor k_{IGBT} and the derating characteristics can be ignored (see section "Duty cycles" in the SINAMICS Low Voltage Engineering Manual).

© Siemens 2024

Technical specifications

Line voltage 500 ... 690 V 3 AC		**Motor Modules**			
DC link voltage 675 … 1035 V DC		6SL3725-1TG31-0AA3	6SL3725-1TG31-5AA3	6SL3725-1TG32-2AA3	6SL3725-1TG33-3AA3
Type rating					
• At I_L (50 Hz 690 V) [1]	kW	**90**	**132**	**200**	**315**
• At I_H (50 Hz 690 V) [1]	kW	75	110	160	250
• At I_L (50 Hz 500 V) [1]	kW	55	90	132	200
• At I_H (50 Hz 500 V) [1]	kW	55	90	132	200
• At I_L (60 Hz 575 V) [2]	hp	75	150	200	300
• At I_H (60 Hz 575 V) [2]	hp	75	125	200	250
Output current					
• Rated current $I_{N\,O}$	A	100	150	215	330
• Base-load current I_L [3]	A	95	142	208	320
• Base-load current I_H [4]	A	89	134	192	280
• Maximum current $I_{max\,O}$	A	142	213	312	480
DC link current					
• Rated current $I_{N\,DC}$ when supplied via					
- Basic Line Module	A	122	183	263	403
- Active Line Module	A	110	165	237	363
• Base-load current $I_{L\,DC}$ [3] when supplied via					
- Basic Line Module	A	116	173	253	390
- Active Line Module	A	105	156	229	352
• Base-load current $I_{H\,DC}$ [4] when supplied via					
- Basic Line Module	A	108	163	234	341
- Active Line Module	A	98	147	211	308
Current demand					
• 24 V DC auxiliary power supply	A	1,3	1,3	1,3	1,3
• 230 V 1 AC	A	0.6	0.6	0.6	0.6
DC link capacitance	µF	2800	2800	4200	5800
Pulse frequency [5]					
• Rated frequency	kHz	1.25	1.25	1.25	1.25
• Pulse frequency, max.					
- Without current derating	kHz	1.25	1.25	1.25	1.25
- With current derating	kHz	7.5	7.5	7.5	7.5
Power loss, max. [6] at 50 Hz 690 V					
• Degree of protection <IP55					
- Dissipated to coolant	kW	1.1	1.6	2.3	3.3
- Dissipated to ambient air	kW	0.1	0.1	0.2	0.3
• Degree of protection IP55					
- Dissipated to coolant	kW	1.2	1.7	2.4	3.5
- Dissipated to ambient air	kW	0.1	0.1	0.2	0.2
Coolant volume flow [7] All degrees of protection	l/min (US gal./min)	9 (2.38)	9 (2.38)	12 (3.17)	12 (3.17)
Liquid volume Degree of protection <IP55/IP55	dm^3	2.9/4.7	2.9/4.7	3.5/5.3	3.5/5.3
Pressure drop, max. [8] for volume flow	Pa	150000	150000	150000	150000
Heat exchanger material		Stainless steel	Stainless steel	Stainless steel	Stainless steel
Sound pressure level L_{pA} (1 m) at 50/60 Hz	dB	52	52	52	52
Motor connection U2, V2, W2		M12	M12	M12	M12
• Conductor cross-section, max. (IEC)	mm^2	2 × 95	2 × 95	2 × 240	2 × 240
PE/GND connection		PE bar	PE bar	PE bar	PE bar
• Busbar cross-section	mm^2	600	600	600	600
• Conductor cross-section, max. (IEC)	mm^2	240	240	240	240
Cable length, max. [9] Shielded/unshielded	m (ft)	300/450 (984/1476)	300/450 (984/1476)	300/450 (984/1476)	300/450 (984/1476)
Degree of protection (standard version)		IP21	IP21	IP21	IP21
Dimensions					
• Width	mm (in)	400 (15.75)	400 (15.75)	400 (15.75)	400 (15.75)
• Height	mm (in)	2200 (86.61)	2200 (86.61)	2200 (86.61)	2200 (86.61)
• Depth	mm (in)	600 (23.62)	600 (23.62)	600 (23.62)	600 (23.62)
Weight, approx.	kg (lb)	280 (617)	280 (617)	320 (706)	320 (706)
Frame size		FXL	FXL	GXL	GXL
Short-circuit current rating acc. to IEC	kA	65	65	65	65

1) Rated power of a typical 6-pole standard induction motor based on I_L or I_H for 500 V or 690 V 3 AC 50 Hz.

2) Rated power of a typical 6-pole standard induction motor based on I_L or I_H for 575 V 3 AC 60 Hz.

3) The base-load current I_L is based on a duty cycle of 110 % for 60 s or 150 % for 10 s with a duty cycle duration of 300 s.

4) The base-load current I_H is based on a duty cycle of 150 % for 60 s or 160 % for 10 s with a duty cycle duration of 300 s.

5) Information regarding the correlation between the pulse frequency and max. output current/output frequency is provided in the SINAMICS Low Voltage Engineering Manual.

6) The specified power loss represents the maximum value at 100 % utilization. The value is lower under normal operating conditions.

7) The value applies to coolants comprising water and a mixture of water and antifreeze agent.

8) The value is valid for water as coolant. Additional information and notes on other coolants are provided in the SINAMICS Low Voltage Engineering Manual.

9) Total of all motor cables. Longer cable lengths for specific configurations are available on request.For additional information, please refer to the SINAMICS Low Voltage Engineering Manual.

© Siemens 2024

Technical specifications

Line voltage 500 ... 690 V 3 AC DC link voltage 675 … 1035 V DC		Motor Modules 6SL3725-1TG34-7AA3	6SL3725-1TG35-8AA3	6SL3725-1TG37-4AA3	6SL3725-1TG38-0AA3 [10]
Type rating					
• At I_L (50 Hz 690 V) [1]	kW	**450**	**560**	**710**	**800**
• At I_H (50 Hz 690 V) [1]	kW	400	450	630	710
• At I_L (50 Hz 500 V) [1]	kW	315	400	500	560
• At I_H (50 Hz 500 V) [1]	kW	250	315	450	500
• At I_L (60 Hz 575 V) [2]	hp	450	600	700	800
• At I_H (60 Hz 575 V) [2]	hp	450	500	700	700
Output current					
• Rated current $I_{N\,O}$	A	465	575	735	810
• Base-load current I_L [3]	A	452	560	710	790
• Base-load current I_H [4]	A	416	514	657	724
• Maximum current $I_{max\,O}$	A	678	840	1065	1185
DC link current					
• Rated current $I_{N\,DC}$ when supplied via					
- Basic Line Module	A	558	702	903	990
- Active Line Module	A	502	632	808	891
• Base-load current $I_{L\,DC}$ [3] when supplied via					
- Basic Line Module	A	544	683	870	948
- Active Line Module	A	489	616	781	870
• Base-load current $I_{H\,DC}$ [4] when supplied via					
- Basic Line Module	A	496	627	795	885
- Active Line Module	A	446	565	732	808
Current demand					
• 24 V DC auxiliary power supply	A	1,5	1,5	1,5	1,5
• 230 V 1 AC	A	0.6	0.6	0.6	0.6
DC link capacitance	µF	9670	9670	10500	10500
Pulse frequency [5]					
• Rated frequency	kHz	1.25	1.25	1.25	1.25
• Pulse frequency, max.					
- Without current derating	kHz	1.25	1.25	1.25	1.25
- With current derating	kHz	7.5	7.5	7.5	7.5
Power loss, max. [6] at 50 Hz 690 V					
• Degree of protection <IP55					
- Dissipated to coolant	kW	5.3	5.5	7.5	8.3
- Dissipated to ambient air	kW	0.4	0.5	0.6	0.7
• Degree of protection IP55					
- Dissipated to coolant	kW	5.6	5.8	7.9	8.8
- Dissipated to ambient air	kW	0.2	0.2	0.2	0.2
Coolant volume flow [7] All degrees of protection	l/min (US gal./min)	16 (4.23)	16 (4.23)	16 (4.23)	16 (4.23)
Liquid volume Degree of protection <IP55/IP55	dm^3	3.3/5.1	3.3/5.1	3.3/5.1	3.3/5.1
Pressure drop, max. [8] for volume flow	Pa	150000	150000	150000	150000
Heat exchanger material		Aluminum	Aluminum	Aluminum	Aluminum
Sound pressure level L_{pA} (1 m) at 50/60 Hz	dB	54	54	54	54
Motor connection U2, V2, W2		2/M12	2/M12	2/M12	2/M12
• Conductor cross-section, max. (IEC)	mm^2	4 × 185	4 × 185	4 × 185	4 × 185
PE/GND connection		PE bar	PE bar	PE bar	PE bar
• Busbar cross-section	mm^2	600	600	600	600
• Conductor cross-section, max. (IEC)	mm^2	240	240	240	240
Cable length, max. [9] Shielded/unshielded	m (ft)	300/450 (984/1476)	300/450 (984/1476)	300/450 (984/1476)	300/450 (984/1476)
Degree of protection (standard version)		IP21	IP21	IP21	IP21
Dimensions					
• Width	mm (in)	400 (15.75)	400 (15.75)	400 (15.75)	400 (15.75)
• Height	mm (in)	2200 (86.61)	2200 (86.61)	2200 (86.61)	2200 (86.61)
• Depth	mm (in)	600 (23.62)	600 (23.62)	600 (23.62)	600 (23.62)
Weight, approx.	kg (lb)	350 (772)	350 (772)	350 (772)	350 (772)
Frame size		HXL	HXL	HXL	HXL
Rated short-circuit current according to IEC	kA	84	84	100	100

1) Rated power of a typical 6-pole standard induction motor based on I_L or I_H for 500 V or 690 V 3 AC 50 Hz.

2) Rated power of a typical 6-pole standard induction motor based on I_L or I_H for 575 V 3 AC 60 Hz.

3) The base-load current I_L is based on a duty cycle of 110 % for 60 s or 150 % for 10 s with a duty cycle duration of 300 s.

4) The base-load current I_H is based on a duty cycle of 150 % for 60 s or 160 % for 10 s with a duty cycle duration of 300 s.

5) Information regarding the correlation between the pulse frequency and max. output current/output frequency is provided in the SINAMICS Low Voltage Engineering Manual.

6) The specified power loss represents the maximum value at 100 % utilization. The value is lower under normal operating conditions.

7) The value applies to coolants comprising water and a mixture of water and antifreeze agent.

8) The value is valid for water as coolant.
Additional information and notes on other coolants are provided in the SINAMICS Low Voltage Engineering Manual.

9) Total of all motor cables. Longer cable lengths for specific configurations are available on request.For additional information, please refer to the SINAMICS Low Voltage Engineering Manual.

10) The device is optimized for a base pulse frequency of 1.25 kHz. For an increased pulse frequency or for certain overloads, the derating factor is higher than that for the device with article number 6SL3325-1TG38-1AAx.

© Siemens 2024

Technical specifications

Line voltage 500 ... 690 V 3 AC		**Motor Modules**			
DC link voltage 675 … 1035 V DC		6SL3725-1TG38-1AA3	6SL3725-1TG41-0AA3	6SL3725-1TG41-3AA3	6SL3725-1TG41-6AP3 [10]
Type rating					
• At I_L (50 Hz 690 V) [1]	kW	**800**	**1000**	**1200**	**1500**
• At I_H (50 Hz 690 V) [1]	kW	710	900	1000	1260
• At I_L (50 Hz 500 V) [1]	kW	560	710	900	1000
• At I_H (50 Hz 500 V) [1]	kW	560	630	800	900
• At I_L (60 Hz 575 V) [2]	hp	800	1000	1250	1500
• At I_H (60 Hz 575 V) [2]	hp	700	900	1000	1250
Output current					
• Rated current $I_{N\,O}$	A	810	1025	1270	1560
• Base-load current I_L [3]	A	790	1000	1230	1500
• Base-load current I_H [4]	A	724	917	1136	1370
• Maximum current $I_{max\,O}$	A	1185	1500	1845	2250
DC link current					
• Rated current $I_{N\,DC}$ when supplied via					
- Basic Line Module	A	990	1250	1550	1903
- Active Line Module	A	891	1125	1395	1714
• Base-load current $I_{L\,DC}$ [3] when supplied via					
- Basic Line Module	A	963	1219	1500	1800
- Active Line Module	A	869	1100	1353	1650
• Base-load current $I_{H\,DC}$ [4] when supplied via					
- Basic Line Module	A	883	1118	1384	1680
- Active Line Module	A	796	1009	1250	1550
Current demand					
• 24 V DC auxiliary power supply	A	1,5	1,5	1,5	1,5
• 230 V 1 AC	A	0.6	0.6	0.6	0.6
DC link capacitance	µF	14000	16000	19330	21000
Pulse frequency [5]					
• Rated frequency	kHz	1.25	1.25	1.25	1.25
• Pulse frequency, max.					
- Without current derating	kHz	1.25	1.25	1.25	1.25
- With current derating	kHz	7.5	7.5	7.5	7.5
Power loss, max. [6] at 50 Hz 690 V					
• Degree of protection <IP55					
- Dissipated to coolant	kW	9.0	10.0	12.9	17.1
- Dissipated to ambient air	kW	1.1	1.2	1.4	1.6
• Degree of protection IP55					
- Dissipated to coolant	kW	9.8	11.2	14.0	18.4
- Dissipated to ambient air	kW	0.3	0.3	0.3	0.3
Coolant volume flow [7] All degrees of protection	l/min (US gal./min)	27 (7.13)	27 (7.13)	27 (7.13)	27 (7.13)
Liquid volume Degree of protection <IP55/IP55	dm^3	5.2/7	5.2/7	5.2/7	5.2/7
Pressure drop, max. [8] for volume flow	Pa	150000	150000	150000	150000
Heat exchanger material		Aluminum	Aluminum	Aluminum	Aluminum
Sound pressure level L_{pA} (1 m) at 50/60 Hz	dB	56	56	56	56
Motor connection U2, V2, W2		2/M12	2/M12	2/M12	2/M12
• Conductor cross-section, max. (IEC)	mm^2	4 × 240	4 × 240	4 × 240	4 × 240
PE/GND connection		PE bar	PE bar	PE bar	PE bar
• Busbar cross-section	mm^2	600	600	600	600
• Conductor cross-section, max. (IEC)	mm^2	240	240	240	240
Cable length, max. [9] Shielded/unshielded	m (ft)	300/450 (984/1476)	300/450 (984/1476)	300/450 (984/1476)	300/450 (984/1476)
Degree of protection (standard version)		IP21	IP21	IP21	IP21
Dimensions					
• Width	mm (in)	600 (23.62)	600 (23.62)	600 (23.62)	600 (23.62)
• Height	mm (in)	2200 (86.61)	2200 (86.61)	2200 (86.61)	2200 (86.61)
• Depth	mm (in)	600 (23.62)	600 (23.62)	600 (23.62)	600 (23.62)
Weight, approx.	kg (lb)	460 (1014)	460 (1014)	460 (1014)	480 (1058)
Frame size		JXL	JXL	JXL	JXL
Rated short-circuit current according to IEC	kA	100	100	100	100

1) Rated power of a typical 6-pole standard induction motor based on I_L or I_H for 500 V or 690 V 3 AC 50 Hz.

2) Rated power of a typical 6-pole standard induction motor based on I_L or I_H for 575 V 3 AC 60 Hz.

3) The base-load current I_L is based on a duty cycle of 110 % for 60 s or 150 % for 10 s with a duty cycle duration of 300 s.

4) The base-load current I_H is based on a duty cycle of 150 % for 60 s or 160 % for 10 s with a duty cycle duration of 300 s.

5) Information regarding the correlation between the pulse frequency and max. output current/output frequency is provided in the SINAMICS Low Voltage Engineering Manual.

6) The specified power loss represents the maximum value at 100 % utilization. The value is lower under normal operating conditions.

7) The value applies to coolants comprising water and a mixture of water and antifreeze agent.

8) The value is valid for water as coolant.
Additional information and notes on other coolants are provided in the SINAMICS Low Voltage Engineering Manual.

9) Total of all motor cables. Longer cable lengths for specific configurations are available on request.For additional information, please refer to the SINAMICS Low Voltage Engineering Manual.

10) Additional duty cycle for output frequencies from 5 Hz to 10 Hz: Base-load current = 1460 A, short-time current = 2340 A for 5 s with a duty cycle duration of 600 s. For output frequencies from 1 Hz to 5 Hz, the short-time current is 1900 A for 5 s.

© Siemens 2024

Overview

Motor Modules are available in the power range from 90 kW to 1500 kW.

Line voltage	DC link voltage	Type rating
380 ... 480 V 3 AC	510 ... 720 V DC	560 ... 800 kW
500 ... 690 V 3 AC	675 ... 1035 V DC	800 ... 1500 kW

Motor Modules with the supplementary designation compact are installed in a compact cabinet 400 mm wide, therefore differing from the Motor Modules with an identical power rating installed in a 600 mm-wide cabinet.

By connecting in parallel up to four Motor Modules compact, which are operated on one Control Unit and supply one motor, it is possible to increase the available shaft power to max. approx. 5700 kW (taking into account the derating factors according to the SINAMICS Low Voltage Engineering Manual).

The Motor Modules can also be used as Braking Modules (braking chopper) if a 3-phase braking resistor is connected instead of a motor.
Further information can be found in the SINAMICS Low Voltage Engineering Manual.

Design

Motor Modules contain the following components as standard:

- Retaining device for the DC busbar, including the connection to the DC connections of the Motor Module
- Connection busbars, nickel-plated
  - on Motor Modules, frame size JXL, the connection for the motor cables is routed below the device
- Cable retaining bar for the power cables
- DRIVE-CLiQ interface (three DRIVE-CLiQ sockets), without Control Unit
- Auxiliary power supply system (4-pole) for the auxiliary power supply, including cable connections for looping through to the next Cabinet Module
- Nickel-plated PE busbar (60 x 10 mm), including jumper for looping through to the next Cabinet Module
- EMC-compliant design thanks to additional shielding measures and appropriately routed cables

Selection and ordering data

Type rating at 400 V or 690 V	Rated output current I_N	**Motor Module compact**
kW	A	Article No.
Line voltage 380 ... 480 V 3 AC (DC link voltage 510 ... 720 V DC)		
560	985	**6SL3725-1TE41-0MA3**
710	1260	**6SL3725-1TE41-2MA3**
800	1405	**6SL3725-1TE41-4MA3**
Line voltage 500 ... 690 V 3 AC (DC link voltage 675 ... 1035 V DC)		
800	810	**6SL3725-1TG38-1MA3**
1000	1025	**6SL3725-1TG41-0MA3**
1200	1270	**6SL3725-1TG41-3MA3**
1500	1560	**6SL3725-1TG41-6MP3**

© Siemens 2024

Integration

Motor Modules compact are controlled by the CU320-2 DP or CU320-2 PN Control Unit. Communication between the Control Unit and Modules is established via a DRIVE-CLiQ connection.

The Control Unit must be mounted externally, the DRIVE-CLiQ cable will not be included in the scope of supply and must be configured on site.

For additional information, please refer to the SINAMICS Low Voltage Engineering Manual.

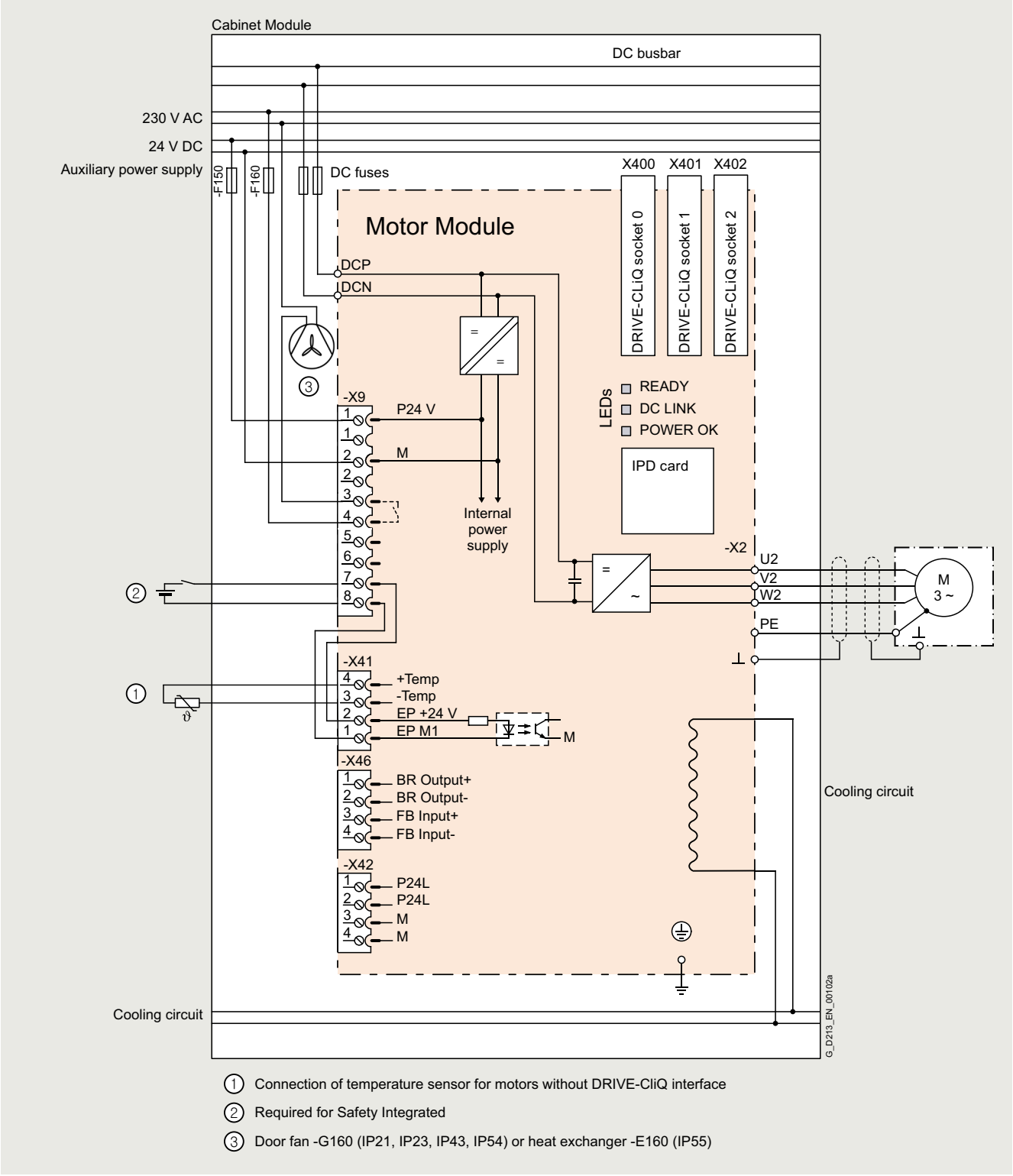

Connection example of a Motor Module compact, liquid-cooled

© Siemens 2024

Technical specifications

Line voltage 380 ... 480 V 3 AC		Motor Modules compact		
DC link voltage 510 ... 720 V DC		6SL3725-1TE41-0MA3	6SL3725-1TE41-2MA3	6SL3725-1TE41-4MA3
Type rating				
• At I_L (50 Hz 400 V) [1]	kW	**560**	**710**	**800**
• At I_H (50 Hz 400 V) [1]	kW	450	630	710
• At I_L (60 Hz 460 V) [2]	hp	800	1000	1150
• At I_H (60 Hz 460 V) [2]	hp	700	900	1000
Output current				
• Rated current $I_{N\,O}$	A	985	1260	1405
• Base-load current I_L [3]	A	960	1230	1370
• Base-load current I_H [4]	A	860	1127	1257
• Maximum current $I_{max\,O}$	A	1440	1845	2055
DC link current				
• Rated current $I_{N\,DC}$ when supplied via				
- Basic Line Module	A	1202	1512	1714
- Active Line Module	A	1080	1361	1544
• Base-load current $I_{L\,DC}$ [3] when supplied via				
- Basic Line Module	A	1170	1474	1670
- Active Line Module	A	1051	1326	1500
• Base-load current $I_{H\,DC}$ [4] when supplied via				
- Basic Line Module	A	1048	1345	1532
- Active Line Module	A	942	1211	1377
Current demand				
• 24 V DC auxiliary power supply	A	1.5	1.5	1.5
• 230 V 1 AC	A	0.6	0.6	0.6
DC link capacitance	µF	21000	29000	29000
Pulse frequency [5]				
• Rated frequency	kHz	1.25	1.25	1.25
• Pulse frequency, max.				
- Without current derating	kHz	1.25	1.25	1.25
- With current derating	kHz	8	8	8
Power loss, max. [6] at 50 Hz 400 V				
• Degree of protection <IP55				
- Dissipated to coolant	kW	7.5	8.6	9.5
- Dissipated to ambient air	kW	1.0	1.3	1.5
• Degree of protection IP55				
- Dissipated to coolant	kW	8.3	9.6	10.7
- Dissipated to ambient air	kW	0.2	0.3	0.3
Coolant volume flow [7] All degrees of protection	l/min (US gal./min)	27 (7.13)	27 (7.13)	27 (7.13)
Liquid volume Degree of protection <IP55/IP55	dm^3	5.2/7	5.2/7	5.2/7
Pressure drop, max. [8] for volume flow	Pa	150000	150000	150000
Heat exchanger material		Aluminum	Aluminum	Aluminum
Sound pressure level L_{pA} (1 m) at 50/60 Hz	dB	56	56	56
Motor connection U2, V2, W2		10/M12	10/M12	10/M12
• Conductor cross-section, max. (IEC)	mm^2	10 × 95	10 × 95	10 × 95
PE/GND connection		PE bar	PE bar	PE bar
• Busbar cross-section	mm^2	600	600	600
• Conductor cross-section, max. (IEC)	mm^2	240	240	240
Cable length, max. [9] Shielded/unshielded	m (ft)	300/450 (984/1476)	300/450 (984/1476)	300/450 (984/1476)
Degree of protection (standard version)		IP21	IP21	IP21
Dimensions				
• Width	mm (in)	400 (15.7)	400 (15.7)	400 (15.7)
• Height	mm (in)	2200 (86.6)	2200 (86.6)	2200 (86.6)
• Depth	mm (in)	600 (23.6)	600 (23.6)	600 (23.6)
Weight, approx.	kg (lb)	440 (970)	440 (970)	440 (970)
Frame size		JXL	JXL	JXL
Rated short-circuit current according to IEC	kA	84	100	100

[1] Rated power of a typical 6-pole standard induction motor based on I_L or I_H for 400 V 3 AC 50 Hz.

[2] Rated power of a typical 6-pole standard induction motor based on I_L or I_H for 460 V 3 AC 60 Hz.

[3] The base-load current I_L is based on a duty cycle of 110 % for 60 s or 150 % for 10 s with a duty cycle duration of 300 s.

[4] The base-load current I_H is based on a duty cycle of 150 % for 60 s or 160 % for 10 s with a duty cycle duration of 300 s.

[5] Information regarding the correlation between the pulse frequency and max. output current/output frequency is provided in the SINAMICS Low Voltage Engineering Manual.

[6] The specified power loss represents the maximum value at 100 % utilization. The value is lower under normal operating conditions.

[7] The value applies to coolants comprising water and a mixture of water and antifreeze agent.

[8] The value is valid for water as coolant.
Additional information and notes on other coolants are provided in the SINAMICS Low Voltage Engineering Manual.

[9] Total of all motor cables. Longer cable lengths for specific configurations are available on request.For additional information, please refer to the SINAMICS Low Voltage Engineering Manual.

© Siemens 2024

Technical specifications

Line voltage 500 ... 690 V 3 AC DC link voltage 675 … 1035 V DC		Motor Modules compact 6SL3725-1TG38-1MA3	6SL3725-1TG41-0MA3	6SL3725-1TG41-3MA3	6SL3725-1TG41-6MP3 [10]
Type rating					
• At I_L (50 Hz 690 V) [1]	kW	**800**	**1000**	**1200**	**1500**
• At I_H (50 Hz 690 V) [1]	kW	710	900	1000	1260
• At I_L (50 Hz 500 V) [1]	kW	560	710	900	1000
• At I_H (50 Hz 500 V) [1]	kW	560	630	800	900
• At I_L (60 Hz 575 V) [2]	hp	800	1000	1250	1500
• At I_H (60 Hz 575 V) [2]	hp	700	900	1000	1250
Output current					
• Rated current $I_{N\,O}$	A	810	1025	1270	1560
• Base-load current I_L [3]	A	790	1000	1230	1500
• Base-load current I_H [4]	A	724	917	1136	1370
• Maximum current $I_{max\,O}$	A	1185	1500	1845	2250
DC link current					
• Rated current $I_{N\,DC}$ when supplied via					
- Basic Line Module	A	990	1250	1550	1903
- Active Line Module	A	891	1125	1395	1714
• Base-load current $I_{L\,DC}$ [3] when supplied via					
- Basic Line Module	A	963	1219	1500	1800
- Active Line Module	A	869	1100	1353	1650
• Base-load current $I_{H\,DC}$ [4] when supplied via					
- Basic Line Module	A	883	1118	1384	1680
- Active Line Module	A	796	1009	1250	1550
Current demand					
• 24 V DC auxiliary power supply	A	1.5	1.5	1.5	1.5
• 230 V 1 AC	A	0.6	0.6	0.6	0.6
DC link capacitance	µF	14000	16000	19330	21000
Pulse frequency [5]					
• Rated frequency	kHz	1.25	1.25	1.25	1.25
• Pulse frequency, max.					
- Without current derating	kHz	1.25	1.25	1.25	1.25
- With current derating	kHz	7.5	7.5	7.5	7.5
Power loss, max. [6] at 50 Hz 690 V					
• Degree of protection <IP55					
- Dissipated to coolant	kW	9.0	10.0	12.9	17.1
- Dissipated to ambient air	kW	1.1	1.2	1.4	1.6
• Degree of protection IP55					
- Dissipated to coolant	kW	9.8	11.2	14.0	18.4
- Dissipated to ambient air	kW	0.3	0.3	0.3	0.3
Coolant volume flow [7] All degrees of protection	l/min (US gal./min)	27 (7.13)	27 (7.13)	27 (7.13)	27 (7.13)
Liquid volume Degree of protection <IP55/IP55	dm^3	5.2/7	5.2/7	5.2/7	5.2/7
Pressure drop, max. [8] for volume flow	Pa	150000	150000	150000	150000
Heat exchanger material		Aluminum	Aluminum	Aluminum	Aluminum
Sound pressure level L_{pA} (1 m) at 50/60 Hz	dB	56	56	56	56
Motor connection U2, V2, W2		10/M12	10/M12	10/M12	10/M12
• Conductor cross-section, max. (IEC)	mm^2	10 × 95	10 × 95	10 × 95	10 × 95
PE/GND connection		PE bar	PE bar	PE bar	PE bar
• Busbar cross-section	mm^2	600	600	600	600
• Conductor cross-section, max. (IEC)	mm^2	240	240	240	240
Cable length, max. [9] Shielded/unshielded	m (ft)	300/450 (984/1476)	300/450 (984/1476)	300/450 (984/1476)	300/450 (984/1476)
Degree of protection (standard version)		IP21	IP21	IP21	IP21
Dimensions					
• Width	mm (in)	400 (15.7)	400 (15.7)	400 (15.7)	400 (15.7)
• Height	mm (in)	2200 (86.6)	2200 (86.6)	2200 (86.6)	2200 (86.6)
• Depth	mm (in)	600 (23.6)	600 (23.6)	600 (23.6)	600 (23.6)
Weight, approx.	kg (lb)	440 (970)	440 (970)	440 (970)	460 (1014)
Frame size		JXL	JXL	JXL	JXL
Rated short-circuit current according to IEC	kA	100	100	100	100

1) Rated power of a typical 6-pole standard induction motor based on I_L or I_H for 500 V or 690 V 3 AC 50 Hz.

2) Rated power of a typical 6-pole standard induction motor based on I_L or I_H for 575 V 3 AC 60 Hz.

3) The base-load current I_L is based on a duty cycle of 110 % for 60 s or 150 % for 10 s with a duty cycle duration of 300 s.

4) The base-load current I_H is based on a duty cycle of 150 % for 60 s or 160 % for 10 s with a duty cycle duration of 300 s.

5) Information regarding the correlation between the pulse frequency and max. output current/output frequency is provided in the SINAMICS Low Voltage Engineering Manual.

6) The specified power loss represents the maximum value at 100 % utilization. The value is lower under normal operating conditions.

7) The value applies to coolants comprising water and a mixture of water and antifreeze agent.

8) The value is valid for water as coolant.
Additional information and notes on other coolants are provided in the SINAMICS Low Voltage Engineering Manual.

9) Total of all motor cables. Longer cable lengths for specific configurations are available on request.For additional information, please refer to the SINAMICS Low Voltage Engineering Manual.

10) Additional duty cycle for output frequencies from 5 Hz to 10 Hz: Base-load current = 1460 A, short-time current = 2340 A for 5 s with a duty cycle duration of 600 s. For output frequencies from 1 Hz to 5 Hz, the short-time current is 1900 A for 5 s.

© Siemens 2024

Overview

Auxiliary Power Supply Modules supply the auxiliary power supply system for the SINAMICS S120 Cabinet Modules as well as additional external loads. The heat exchangers, which are installed in the Cabinet Modules with degree of protection IP55, are one of the connections to the auxiliary power supply system. In addition, the auxiliary power supply system supplies the electronic modules with an external voltage of 24 V DC. This is required when the DC link is not charged, for instance, in order to maintain PROFIBUS/PROFINET communication.

The Auxiliary Power Supply Module provides an expansion to the option **K76** (auxiliary voltage generating unit in the Line Connection Module) if higher power ratings are required.

Design

The Auxiliary Power Supply Module is connected in the customer's plant to a voltage corresponding to the respective rated unit voltage.

The standard version contains the following components:

- Fuse switch disconnector with fuse monitoring for external evaluation
- Supply of auxiliary power supply system with 2 auxiliary voltages:
  - 24 V DC for the electronics power supply
  - 230 V 2 AC to supply 230 V loads
- Transformer with 230 V output voltage
- SITOP 24 V DC power supply
- Nickel-plated PE busbar (60 mm × 10 mm), including jumper for looping through to the next Cabinet Module

Selection and ordering data

Plant-side power supply (380 ... 690 V 3 AC)	**Auxiliary Power Supply Module**
A	Article No.
25	**6SL3705-0MX22-0AA3**

© Siemens 2024

Integration

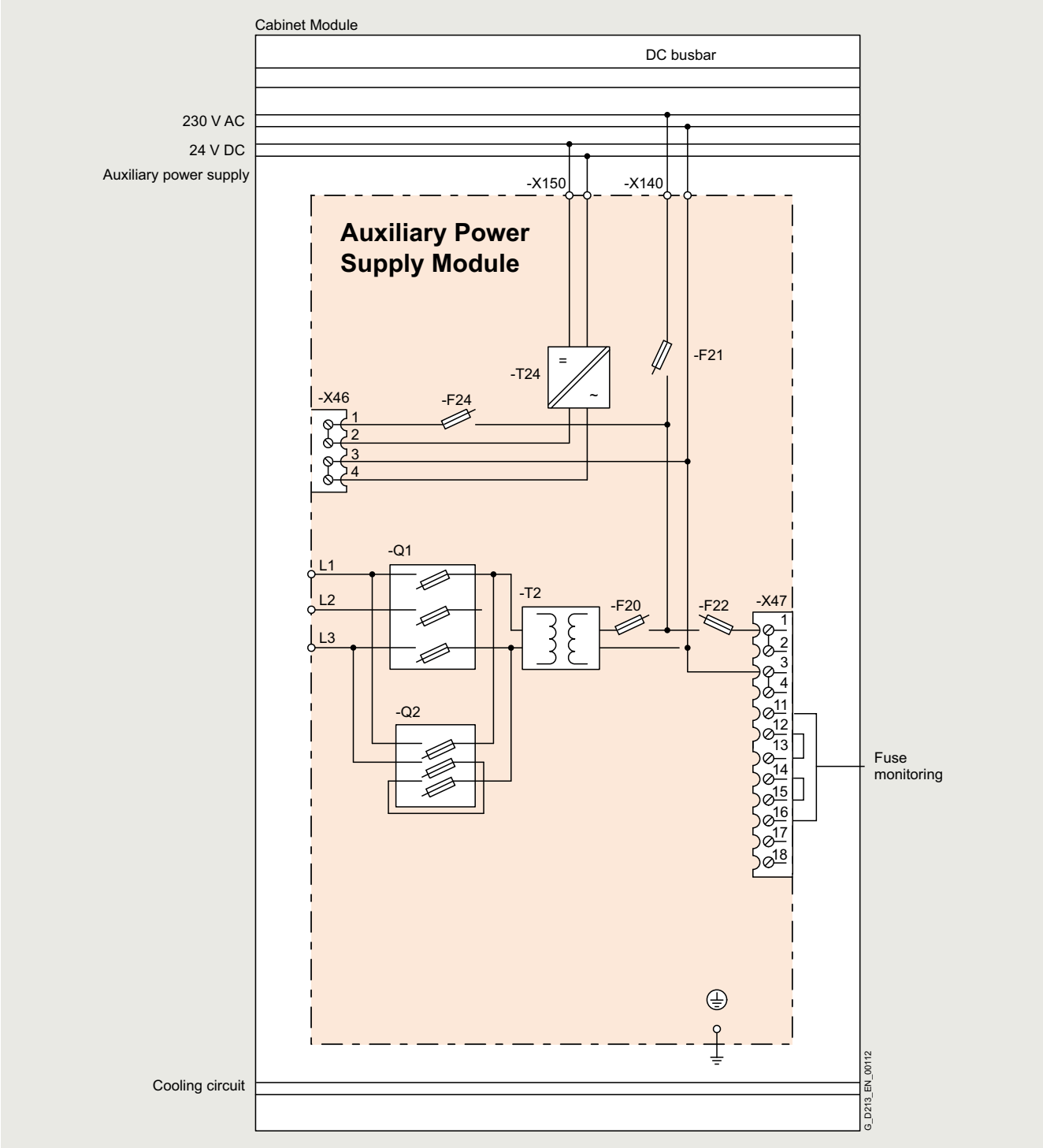

Connection example of an Auxiliary Power Supply Module, liquid-cooled

© Siemens 2024

Technical specifications

		Auxiliary Power Supply Module 6SL3705-0MX22-0AA3
Plant-side power supply 380 ... 690 V 3 AC	A	**25**
Line supply connection		
• Conductor cross-section, max. (IEC)	mm^2	70
• Recommended conductor cross-section	mm^2	6
Max. current carrying capacity		
• Load connection 230 V 2 AC		
- To auxiliary power supply	A	10
- To customer terminal -X47	A	10
• Load connection 24 V DC		
- To auxiliary power supply	A	20
Cable cross-section, max.		
• Connection -X47	mm^2	2.5
Cooling air requirement		Natural convection
PE/GND connection		PE bar
• Busbar cross-section	mm^2	600
• Conductor cross-section, max. (IEC)	mm^2	240
Degree of protection		IP21
Dimensions		
• Width	mm (in)	600 (23.62)
• Height	mm (in)	2200 (86.61)
• Depth	mm (in)	600 (23.62)
Weight, approx.	kg (lb)	160 (353)
Short-circuit current rating acc. to IEC	kA	80
Minimum short-circuit current [1]	kA	0.4

[1] Current required to ensure reliable tripping of installed protective devices.

© Siemens 2024

Overview

Heat Exchanger Modules are used to dissipate the power loss from the converter. They comprise a deionized water circuit on the converter side and a raw water circuit on the plant side.

The hot deionized water in the circuit on the converter side passes through a low-maintenance circulating pump (2 redundant pumps with option **W01**) into the water/water plate-type heat exchanger. This is made of stainless steel and connected to the raw water circuit on the plant side.
The deionized water is cooled there by the raw water of the outer circuit and flows back into the drive.

The closed converter-side deionized water circuit is filled with coolant in accordance with the requirements in section "Cooling circuit and coolant quality" and deaerated before commissioning. The pressure is maintained by means of an expansion chamber. Any residual air that arises in the circuit during operation is removed via automatic vents.

To avoid condensation at excessively low coolant temperatures, a 3-way valve for controlling the coolant temperature is installed.

The Heat Exchanger Modules are controlled and monitored in the external CU320-2 Control Unit or CU310-2 Control Unit as "Technology Extension HEM". This means that the Heat Exchanger Modules are controlled and monitored in a drive-related manner which therefore increases usability. The system parameters of the Heat Exchanger Modules can be accessed using the familiar tools (SINAMICS Startdrive or STARTER).
For additional information on Technology Extension HEM, see:
https://support.industry.simens.com/cs/ww/en/view/109772200

Functionalities for avoiding condensation are integrated and can be parameterized together with further settings. Integration into the drive system means that integration into higher-level control systems to visualize signals and messages is considerably easier.
When ordering a Heat Exchanger Module, the SINAMICS Technology Extension HEM license (CoL) required for operation is included in electronic form.

Heat Exchanger Modules are available for the following voltages and cooling power ratings:

Line voltage	Cooling power
380 ... 415 V 3 AC, 50 Hz	32 ... 120 kW
500 ... 690 V 3 AC, 50 Hz	32 ... 120 kW

Heat Exchanger Modules for the line voltages 440 V to 480 V, 60 Hz are available as option **C95** and 500 V to 690 V, 60 Hz as option **C97**.

Design

The deionized water is monitored by the converter itself to ensure intrinsic protection. The operating status is signaled to the converter.

Heat Exchanger Modules contain the following components as standard:

- 1 pump
- 1 stainless steel plate-type heat exchanger
- 1 3-way valve
- Dirt trap, expansion chamber, vent, safety valve, pressure sensors, pressure display, temperature sensor, TM31 Terminal Module

Scope of supply:

The pipe connections (couplings) for connection to the deionized water circuit on the converter side are included in the scope of supply of the Heat Exchanger Modules. The pipe connections (couplings) for connection to the raw water circuit on the plant/system side are not components of the scope of supply. For this connection, a connecting pipe and a pipe coupling with the appropriate diameter must be used.
The respective data is given in the Technical specifications.

Note:
Heat Exchanger Modules can only be located at the beginning or end of a cabinet row for technical reasons. The cooling water on the plant side is fed into the Heat Exchanger Module from above as standard.

Selection and ordering data

Cooling power kW	**Heat Exchanger Module** Article No.
Line voltage 380 ... 415 V 3 AC, 50 Hz; 440 ... 480 V 3 AC, 60 Hz	
32	**6SL3705-0RE23-2AA5**
48	**6SL3705-0RE24-8AA5**
72	**6SL3705-0RE27-2AA5**
120	**6SL3705-0RE31-1AA5**
Line voltage 500 ... 690 V 3 AC, 50/60 Hz	
32	**6SL3705-0RG23-2AA5**
48	**6SL3705-0RG24-8AA5**
72	**6SL3705-0RG27-2AA5**
120	**6SL3705-0RG31-1AA5**

© Siemens 2024

Integration

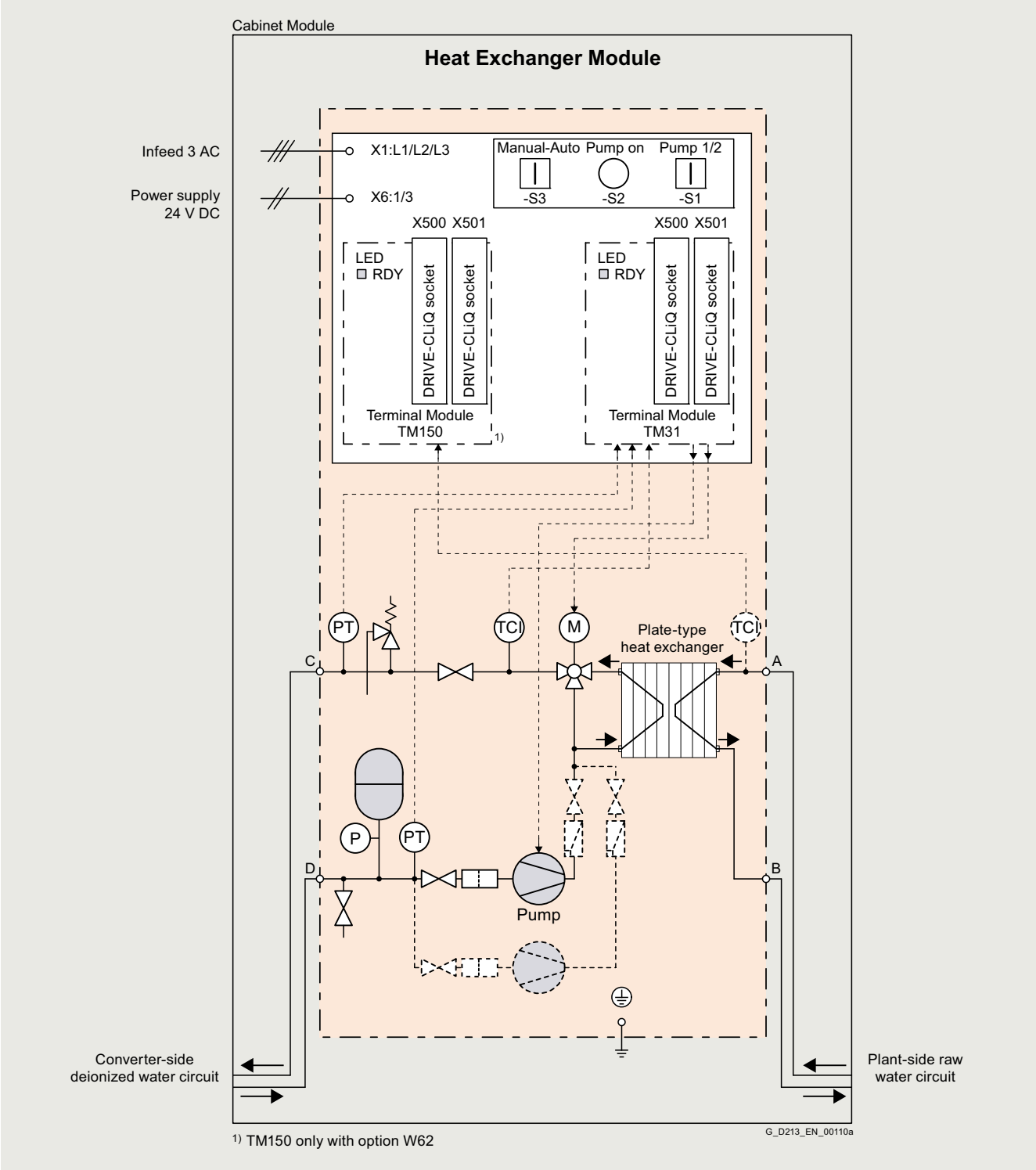

1) TM150 only with option W62

Connection example of a Heat Exchanger Module, liquid-cooled

© Siemens 2024

Technical specifications

The Heat Exchanger Modules must be selected appropriately for the required cooling power and the required volume flow of coolant in the converter-side deionized water circuit. The values stated in the technical specifications of the Cabinet Modules for the heat loss dissipated into the coolant must be summated. The total value is then the required cooling power.

The volume flow of coolant stated in the technical data of the Cabinet Modules must also be added.

If either of the two total values exceeds the values defined in the technical specifications of the Heat Exchanger Module (cooling power and volume flow of coolant for converter-side deionized water), the next larger Heat Exchanger Module must be selected.

Line voltage 380 … 415 V 3 AC 50 Hz **Line voltage 440 … 480 V 3 AC 60 Hz** [1]		**Heat Exchanger Modules**			
		6SL3705-0RE23-2AA5	6SL3705-0RE24-8AA5	6SL3705-0RE27-2AA5	6SL3705-0RE31-1AA5
Cooling power	kW	**32**	**48**	**72**	**120**
Deionized water circuit (on the converter side)					
Inlet temperature • Min.	°C (°F)	Depending on the ambient temperature and humidity of the air (see table for the dew point in section Liquid-cooled Cabinet Modules → Protection against condensation)			
• Max. - Drive line-up degree of protection <IP55 - Drive line-up degree of protection IP55	 °C (°F) °C (°F)	 45 (113) 40 (104)	 45 (113) 40 (104)	 45 (113) 40 (104)	 45 (113) 40 (104)
Intake pressure • Min. • Max.	 bar bar	 1.7 6	 1.7 6	 1.7 6	 1.7 6
Coolant volume flow [2]	l/min (US gal./min)	88 (23.2)	132 (34.9)	197 (52.0)	267 (70.5)
Liquid volume	l (US gal.)	20.4 (5.4)	21.4 (5.7)	30.5 (8.1)	32.5 (8.6)
Intake/return connection • External diameter x wall thickness	mm (in)	76.1 x 2 (3.00 × 0.08)	76.1 x 2 (3.00 × 0.08)	76.1 x 2 (3.00 × 0.08)	76.1 x 2 (3.00 × 0.08)
Raw water circuit (on the plant side)					
Inlet temperature • Min. • Max. - Drive line-up degree of protection <IP55 - Drive line-up degree of protection IP55	 °C (°F) °C (°F) °C (°F)	 5 (41.0) [3] 38 (100) 33 (91.4)	 5 (41.0) [3] 38 (100) 33 (91.4)	 5 (41.0) [3] 38 (100) 33 (91.4)	 5 (41.0) [3] 38 (100) 33 (91.4)
Intake pressure, max.	bar	6	6	6	6
Coolant volume flow [2]	l/min (US gal./min)	132 (34.9)	198 (52.3)	263 (69.5)	445 (118)
Differential pressure drop at rated volume flow, max.	kPa	50	60	70	90
Intake/return connection • External diameter x wall thickness	mm (in)	42 x 1.5 (1.65 × 0.06)	42 x 1.5 (1.65 × 0.06)	76.1 x 2 (3.00 × 0.08)	76.1 x 2 (3.00 × 0.08)
General data					
Heat exchanger material		Stainless steel	Stainless steel	Stainless steel	Stainless steel
Current consumption • Operating current, total at 50/60 Hz 400 V • Electronics current (24 V DC)	 A A	 7.5/7.0 1.0	 7.5/7.0 1.0	 11.0/12.0 1.0	 11.0/12.0 1.0
Power consumption, max. at 50/60 Hz 400 V	kW	3.5/4.7	3.5/4.7	5.5/6.4	5.5/6.4
Sound pressure level L_{pA} (1 m) at 50 Hz	dB	60	60	60	60
Line supply connection L1, L2, L3 • Conductor cross-section, max. (IEC)	 mm^2	Terminal 4	Terminal 4	Terminal 4	Terminal 4
PE/GND connection • Conductor cross-section, max. (IEC)	 mm^2	Terminal 4	Terminal 4	Terminal 4	Terminal 4
Degree of protection (standard version)		IP55	IP55	IP55	IP55
Dimensions • Width [4] • Height • Depth	 mm (in) mm (in) mm (in)	 600 (23.6) 2200 (86.6) 600 (23.6)	 600 (23.6) 2200 (86.6) 600 (23.6)	 600 (23.6) 2200 (86.6) 600 (23.6)	 600 (23.6) 2200 (86.6) 600 (23.6)
Weight, approx. [5] (standard version)	kg (lb)	310 (683)	310 (683)	320 (705)	320 (705)

[1] Heat Exchanger Modules 440 V to 480 V, 60 Hz available with option **C95**

[2] The value is valid for water as coolant.
For other coolants, see section Cooling circuit and coolant properties.

[3] 0 °C (32 °F) with antifreeze (see derating characteristics).

[4] With option **W01**, the cabinet width increases to 1000 mm (39.37 in).

[5] With option **W01**, the cabinet weight increases by approximately 110 kg (243 lb).

© Siemens 2024

Technical specifications

With Heat Exchanger Modules for line voltages of 500 ... 690 V 3 AC, the voltage is adapted to the 400 V 3 AC/50 Hz or 460 V/60 Hz supply voltage of the pump using a transformer.

Line voltage 500 … 690 V 3 AC 50 Hz **Line voltage 500 ... 690 V 3 AC 60 Hz[1]**		**Heat Exchanger Modules**			
		6SL3705-0RG23-2AA5	6SL3705-0RG24-8AA5	6SL3705-0RG27-2AA5	6SL3705-0RG31-1AA5
Cooling power	kW	**32**	**48**	**72**	**120**
Deionized water circuit (on the converter side)					
Inlet temperature					
• Min.	°C (°F)	Depending on the ambient temperature and humidity of the air (see table for the dew point in section Liquid-cooled Cabinet Modules → Protection against condensation)			
• Max.					
- Drive line-up degree of protection <IP55	°C (°F)	45 (113)	45 (113)	45 (113)	45 (113)
- Drive line-up degree of protection IP55	°C (°F)	40 (104)	40 (104)	40 (104)	40 (104)
Intake pressure					
• Min.	bar	1.7	1.7	1.7	1.7
• Max.	bar	6	6	6	6
Coolant volume flow [2]	l/min (US gal./min)	88 (23.2)	132 (34.9)	197 (52.0)	267 (70.5)
Liquid volume	l (US gal.)	20.4 (5.4)	21.4 (5.7)	30.5 (8.1)	32.5 (8.6)
Intake/return connection					
• External diameter x wall thickness	mm (in)	76.1 x 2 (3.00 × 0.08)	76.1 x 2 (3.00 × 0.08)	76.1 x 2 (3.00 × 0.08)	76.1 x 2 (3.00 × 0.08)
Raw water circuit (on the plant side)					
Inlet temperature					
• Min.	°C (°F)	5 (41.0) [3]	5 (41.0) [3]	5 (41.0) [3]	5 (41.0) [3]
• Max.					
- Drive line-up degree of protection <IP55	°C (°F)	38 (100)	38 (100)	38 (100)	38 (100)
- Drive line-up degree of protection IP55	°C (°F)	33 (91.4)	33 (91.4)	33 (91.4)	33 (91.4)
Intake pressure, max.	bar	6	6	6	6
Coolant volume flow [2]	l/min (US gal./min)	132 (34.9)	198 (52.3)	263 (69.5)	445 (118)
Differential pressure drop at rated volume flow, max.	kPa	50	60	70	90
Intake/return connection					
• External diameter x wall thickness	mm (in)	42 x 1.5 (1.65 × 0.06)	42 x 1.5 (1.65 × 0.06)	76.1 x 2 (3.00 × 0.08)	76.1 x 2 (3.00 × 0.08)
General data					
Heat exchanger material		Stainless steel	Stainless steel	Stainless steel	Stainless steel
Current consumption					
• Operating current, total at 50/60 Hz 690 V	A	4.4/4.1	4.4/4.1	6.4/7.0	6.4/7.0
• Electronics current (24 V DC)	A	1.0	1.0	1.0	1.0
Power consumption, max. at 50/60 Hz 690 V	kW	3.5/4.7	3.5/4.7	5.5/6.4	5.5/6.4
Sound pressure level L_{pA} (1 m) at 50/60 Hz	dB	60	60	60	60
Line supply connection L1, L2, L3		Terminal	Terminal	Terminal	Terminal
• Conductor cross-section, max. (IEC)	mm^2	4	4	4	4
PE/GND connection		Terminal	Terminal	Terminal	Terminal
• Conductor cross-section, max. (IEC)	mm^2	4	4	4	4
Degree of protection (standard version)		IP55	IP55	IP55	IP55
Dimensions					
• Width [4]	mm (in)	600 (23.6)	600 (23.6)	600 (23.6)	600 (23.6)
• Height	mm (in)	2200 (86.6)	2200 (86.6)	2200 (86.6)	2200 (86.6)
• Depth	mm (in)	600 (23.6)	600 (23.6)	600 (23.6)	600 (23.6)
Weight, approx. [5] (standard version)	kg (lb)	350 (772)	350 (772)	360 (794)	360 (794)

[1] Heat Exchanger Modules 500 V to 690 V, 60 Hz available with option **C97**

[2] The value is valid for water as coolant.
For other coolants, see section Cooling circuit and coolant properties.

[3] 0 °C (32 °F) with antifreeze (see derating characteristics).

[4] With option **W01**, the cabinet width increases to 1000 mm (39.37 in)

[5] With option **W01**, the cabinet weight increases by approximately 110 kg (243 lb).

© Siemens 2024

Accessories

Components for filling the cooling circuit with liquid-cooled SINAMICS S120 Cabinet Modules

For commissioning and filling the deionized water circuit on the converter side with the corresponding cooling medium, the following components are needed:

- 1 pump
- 1 vessel with capacity of 100 l
- 1 hose (1/2")
- 1 ball valve

The coolant base must be mixed before filling the cooling circuit with the coolant additive. 100+ liter drums are suitable for this purpose, for example.

We recommend that a drum pump is used that can produce a pressure of 3 bar. The following pumps are recommended for filling:

- Drum and container pumps for emptying the drum, RE-PP, for corrosive and neutral liquids from Lutz Pumpen GmbH, www.lutz-pumpen.com or
- Chemical pumps, electrical drum pumps from Sinntec Schmiersysteme GmbH, www.sinntec.de

Note:

When placing an order, please state that a hose (1/2"), a ball valve, and a terminal piece are required for a connection with 1/2" on the pump outlet.

© Siemens 2024

Options

Overview

The following table provides an overview of all of the available options – and their assignment to the individual Cabinet Modules.

SINAMICS S120 Cabinet Modules		Air-cooled Cabinet Modules									Liquid-cooled Cabinet Modules						
Order code	Options	Line Connection Module	Basic Line Module	Smart Line Module	Active Line Module with Active Interface Module	Motor Module Booksize (Cabinet Kit)	Motor Module Booksize (Base Cabinet)	Motor Module Chassis	Central Braking Module	Auxiliary Power Supply Module	Basic Line Connection Module	Active Line Connection Module	Active Line Connection Module compact	Motor Module	Motor Module compact	Auxiliary Power Supply Module	Heat Exchanger Module
C95	Supply voltage for the Heat Exchanger Module, 440 .. 480 V/60 Hz	–	–	–	–	–	–	–	–	–	–	–	–	–	–	–	✓
C97	Supply voltage for the Heat Exchanger Module, 500 .. 690 V/60 Hz	–	–	–	–	–	–	–	–	–	–	–	–	–	–	–	✓
G33 [1]	CBE20 Communication Board	–	✓	✓	✓	✓	–	✓	–	–	✓	✓	–	✓	–	–	–
G51	1 x TM150 temperature sensor evaluation unit	✓	–	–	–	✓	–	✓	–	–	✓	✓	–	✓	–	–	–
G52	2 x TM150 temperature sensor evaluation units	✓	–	–	–	✓	–	✓	–	–	✓	✓	–	✓	–	–	–
G53	3 x TM150 temperature sensor evaluation units	✓	–	–	–	–	–	–	–	–	✓	✓	–	–	–	–	–
G54	4 x TM150 temperature sensor evaluation units	✓	–	–	–	–	–	–	–	–	✓	✓	–	–	–	–	–
G56	Contactor monitoring	–	✓	✓	✓ [3]	–	–	–	–	–	–	–	–	–	–	–	–
G60	TM31 Terminal Module	–	–	–	–	✓	–	✓	–	–	✓	✓	–	✓	–	–	–
G61	Additional TM31 Terminal Module	–	–	–	–	✓	–	✓	–	–	✓	✓	–	✓	–	–	–
G62 [1]	TB30 Terminal Board	–	✓	✓	✓	✓	–	✓	–	–	✓	✓	–	✓	–	–	–
K01 to K05	Safety license Extended Functions for 1 to 5 axes	–	–	–	–	✓	–	✓	–	–	–	–	–	✓	–	–	–
K08 [1]	AOP30 Advanced Operator Panel installed in the cabinet door	–	✓	✓	✓	✓	–	✓	–	–	✓	✓	–	✓	–	–	–
K46	SMC10 Sensor Module Cabinet-Mounted	–	–	–	–	✓	–	✓	–	–	–	–	–	✓	–	–	–
K48	SMC20 Sensor Module Cabinet-Mounted	–	–	–	–	✓	–	✓	–	–	–	–	–	✓	–	–	–
K50	SMC30 Sensor Module Cabinet-Mounted	–	–	–	–	✓	–	✓	–	–	–	–	–	✓	–	–	–
K51	VSM10 Voltage Sensing Module	–	–	–	–	✓	–	✓	–	–	–	–	–	✓	–	–	–
K52	Second SMC30 Sensor Module Cabinet-Mounted	–	–	–	–	✓	–	✓	–	–	–	–	–	✓	–	–	–
K70	Fan power supply	✓	–	–	–	–	–	–	–	–	–	–	–	–	–	–	–
K73	SITOP power supply 24 V DC	–	–	–	–	–	✓	–	–	–	–	–	–	–	–	–	–
K76	Auxiliary power generation (in the Line Connection Module)	✓	–	–	–	–	–	–	–	–	✓	✓	–	–	–	–	–
K82	Terminal module for controlling the Safe Torque Off and Safe Stop 1 safety functions	–	–	–	–	✓	–	✓	–	–	–	–	–	✓	–	–	–
K87	TM54F Terminal Module	–	–	–	–	✓	–	✓	–	–	–	–	–	✓	–	–	–
K88	SBA Safe Brake Adapter 230 V AC	–	–	–	–	–	–	✓	–	–	–	–	–	✓	–	–	–
K90 [2]	CU320-2 DP Control Unit	–	✓	✓	✓	✓	–	✓	–	–	✓	✓	–	✓	–	–	–
K94 [1]	Performance expansion for CU320-2 Control Unit	–	✓	✓	✓	✓	–	✓	–	–	✓	✓	–	✓	–	–	–
K95 [2]	CU320-2 PN Control Unit	–	✓	✓	✓	✓	–	✓	–	–	✓	✓	–	✓	–	–	–

✓	Option can be ordered for this Cabinet Module
–	Option cannot be ordered for this Cabinet Module

© Siemens 2024

Overview

SINAMICS S120 Cabinet Modules		Air-cooled Cabinet Modules									Liquid-cooled Cabinet Modules						
Order code	Options	Line Connection Module	Basic Line Module	Smart Line Module	Active Line Module with Active Interface Module	Motor Module Booksize (Cabinet Kit)	Motor Module Booksize (Base Cabinet)	Motor Module Chassis	Central Braking Module	Auxiliary Power Supply Module	Basic Line Connection Module	Active Line Connection Module	Active Line Connection Module compact	Motor Module	Motor Module compact	Auxiliary Power Supply Module	Heat Exchanger Module
L00 [4]	Use in the "first environment" according to EN 61800-3, Category C2 (TN/TT supply systems with grounded neutral point)	✓	–	–	–	–	–	–	–	–	–	–	–	–	–	–	–
L07	dv/dt filter plus Voltage Peak Limiter	–	–	–	–	–	–	✓	–	–	–	–	–	–	–	–	–
L08	Motor reactor	–	–	–	–	✓	–	✓	–	–	–	–	–	–	–	–	–
L09	2 motor reactors connected in series	–	–	–	–	✓	–	–	–	–	–	–	–	–	–	–	–
L10	dv/dt filter plus Voltage Peak Limiter	–	–	–	–	–	–	✓	–	–	–	–	–	–	–	–	–
L13	Main contactor (for supply currents of ≤ 800 A)	✓ [5]	–	–	–	–	–	–	–	–	✓ [5]	–	–	–	–	–	–
L21	Surge suppression	✓	–	–	–	–	–	–	–	–	✓	✓	–	–	–	–	–
L22	Scope of supply without line reactor	✓ [6]	–	✓	–	–	–	–	–	–	✓	–	–	–	–	–	–
L25	Withdrawable circuit breaker in place of a fixed-mounted circuit breaker	✓ [7]	–	–	–	–	–	–	–	–	✓ [7]	✓ [7]	–	–	–	–	–
L34	Output-side circuit breaker (motor-driven)	–	–	–	–	–	–	✓	–	–	–	–	–	–	–	–	–
L37	DC interface incl. pre-charging circuit of the associated DC link capacitance	–	–	–	–	✓	–	✓	–	–	–	–	–	–	–	–	–
L40	Line filter monitoring	–	–	–	✓	–	–	–	–	–	–	✓	✓	–	–	–	–
L41	Current transformer upstream of main circuit breaker	✓	–	–	–	–	–	–	–	–	✓	✓	–	–	–	–	–
L42	Line Connection Module for Active Line Modules	✓	–	–	–	–	–	–	–	–	–	–	–	–	–	–	–
L43	Line Connection Module for Basic Line Modules	✓	–	–	–	–	–	–	–	–	–	–	–	–	–	–	–
L44	Line Connection Module for Smart Line Modules	✓	–	–	–	–	–	–	–	–	–	–	–	–	–	–	–
L45	EMERGENCY OFF pushbutton installed in the cabinet door	✓	–	–	–	–	–	–	–	–	✓	✓	✓	–	–	–	–
L46	Grounding switch upstream of main circuit breaker	✓ [8]	–	–	–	–	–	–	–	–	–	–	–	–	–	–	–
L47	Grounding switch downstream of main circuit breaker	✓ [8]	–	–	–	–	–	–	–	–	–	–	–	–	–	–	–
L50	Cabinet lighting with service socket	✓	–	–	–	–	–	–	–	–	✓	✓	–	–	–	–	–
L55	Cabinet anti-condensation heating	✓	✓	✓	✓	–	✓	✓	✓	✓	✓	✓	✓	✓	✓	✓	✓
L61	25/125 kW braking module (can be used for frame size FB) for line voltages of 380 ... 480 V and 660 ... 690 V	–	✓	–	✓	–	–	✓	–	–	–	–	–	–	–	–	–
L62	50/250 kW braking unit (can be used for frame size GB/GD) for line voltages of 380 ... 480 V and 660 ... 690 V	–	✓ [9]	✓	✓	–	–	✓	–	–	–	–	–	–	–	–	–
L64	25/125 kW braking unit (can be used for frame size FB) for line voltages of 500 ... 600 V	–	✓	–	✓	–	–	✓	–	–	–	–	–	–	–	–	–
L65	50/250 kW braking unit (can be used for frame size GB/GD) for line voltages of 500 ... 600 V	–	✓	✓	✓	–	–	✓	–	–	–	–	–	–	–	–	–
L87	Insulation monitoring	✓	–	–	–	–	–	–	–	–	✓	✓	–	–	–	–	–

✓	Option can be ordered for this Cabinet Module
–	Option cannot be ordered for this Cabinet Module

6

© Siemens 2024

Options

Overview

SINAMICS S120 Cabinet Modules		Air-cooled Cabinet Modules									Liquid-cooled Cabinet Modules						
Order code	Options	Line Connection Module	Basic Line Module	Smart Line Module	Active Line Module with Active Interface Module	Motor Module Booksize (Cabinet Kit)	Motor Module Booksize (Base Cabinet)	Motor Module Chassis	Central Braking Module	Auxiliary Power Supply Module	Basic Line Connection Module	Active Line Connection Module	Active Line Connection Module compact	Motor Module	Motor Module compact	Auxiliary Power Supply Module	Heat Exchanger Module
M06	Base 100 mm high, RAL 7022	✓	✓	✓	✓	–	✓	✓	✓	✓	✓	✓	✓	✓	✓	✓	✓
M07	Cable-marshaling compartment 200 mm high, RAL 7035	✓	✓	✓	✓	–	✓	✓	✓	✓	✓	✓	✓	✓	✓	✓	✓
M21	Degree of protection IP21	✓	✓	✓	✓	–	✓	✓	✓	✓	–	–	–	–	–	–	–
M23	Degree of protection IP23 (includes **M60**)	✓	✓	✓	✓	–	✓	✓	✓	✓	✓	✓	✓	✓	✓	✓	– [10]
M26	Side panel mounted to the right	–	✓	✓	✓	–	✓	✓	✓	✓	✓	✓	✓	✓	✓	✓	✓
M27	Side panel mounted to the left	✓	✓	✓	✓	–	✓	✓	✓	✓	✓	✓	✓	✓	✓	✓	✓
M43	Degree of protection IP43 (includes **M60**)	✓	✓	✓	✓	–	✓	✓	✓	✓	✓	✓	✓	✓	✓	✓	– [10]
M51	Motor connection wired to customer terminal	–	–	–	–	✓	–	–	–	–	–	–	–	–	–	–	–
M54	Degree of protection IP54 (includes **M60**)	✓	✓	✓	✓	–	✓	✓	✓	✓	✓	✓	✓	✓	✓	✓	– [10]
M55	Degree of protection IP55 (includes **M60**)	–	–	–	–	–	–	–	–	–	✓	✓	✓	✓	✓	✓	– [10]
M56	Reinforced mechanical design	✓	✓	✓	✓	–	✓	✓	✓	✓	–	–	–	–	–	–	–
M59	Closed cabinet door, air intake from below through floor opening	✓	✓	✓	✓	–	✓	✓	✓	✓	–	–	–	–	–	–	–
M60 [11]	Additional touch protection (included in **M23**,**M43**, and**M54**)	✓	✓	✓	✓	–	–	✓	–	–	–	–	–	–	–	–	–
M61	Comfort-grip handle with a 3 mm double-bit lock insert	✓	✓	✓	✓	–	✓	✓	✓	✓	✓	✓	✓	✓	✓	✓	✓
M62	Comfort-grip handle with integrated pushbutton lock insert	✓	✓	✓	✓	–	✓	✓	✓	✓	✓	✓	✓	✓	✓	✓	✓
M63	Comfort-grip handle for a padlock with pushbutton as lock insert	✓	✓	✓	✓	–	✓	✓	✓	✓	✓	✓	✓	✓	✓	✓	✓
M66	Marine version	–	–	–	–	–	–	–	–	–	✓	✓	✓	✓	✓	✓	✓
M70	EMC shield bus	✓	–	–	–	–	✓	✓	–	✓	✓	✓	✓	✓	✓	✓	–
M72	Quick-release couplings for water hoses	–	–	–	–	–	–	–	–	–	✓	✓	✓	✓	✓	–	–
M77	Version without component support plates and without additional control components	–	–	–	–	–	✓	–	–	–	–	–	–	–	–	–	–
M89	Extended motor connection panel	–	–	–	–	–	–	–	–	–	–	–	–	–	–	–	–
M90	Crane transport assembly (top-mounted)	✓	✓	✓	✓	–	✓	✓	✓	✓	✓	✓	✓	✓	✓	✓	✓
M91	Marking of all control cable wire ends (including customer-specific cables)	✓	✓	✓	✓	–	✓	✓	✓	✓	✓	✓	✓	✓	✓	✓	✓
N52	DC link fuses	–	✓	–	–	–	–	–	–	–	✓	✓	✓	–	–	–	–
P10	Measuring instrument for line supply values; mounted in cabinet door (includes **L41**)	✓	–	–	–	–	–	–	–	–	✓	✓	–	–	–	–	–
P11	Measuring instrument for line supply values with PROFIBUS connection mounted in cabinet door (includes **L41**)	✓	–	–	–	–	–	–	–	–	✓	✓	–	–	–	–	–

✓	Option can be ordered for this Cabinet Module
–	Option cannot be ordered for this Cabinet Module

© Siemens 2024

Overview

SINAMICS S120 Cabinet Modules		Air-cooled Cabinet Modules									Liquid-cooled Cabinet Modules						
Order code	Options	Line Connection Module	Basic Line Module	Smart Line Module	Active Line Module with Active Interface Module	Motor Module Booksize (Cabinet Kit)	Motor Module Booksize (Base Cabinet)	Motor Module Chassis	Central Braking Module	Auxiliary Power Supply Module	Basic Line Connection Module	Active Line Connection Module	Active Line Connection Module compact	Motor Module	Motor Module compact	Auxiliary Power Supply Module	Heat Exchanger Module
W01	Heat Exchanger Module, partially redundant with 2 pumps	–	–	–	–	–	–	–	–	–	–	–	–	–	–	–	✓
W10	Pipe insulation in the raw water circuit and of the heat exchanger	–	–	–	–	–	–	–	–	–	–	–	–	–	–	–	✓
W20	Raw-water connection from the bottom	–	–	–	–	–	–	–	–	–	–	–	–	–	–	–	✓
W25	Raw water connection from the side	–	–	–	–	–	–	–	–	–	–	–	–	–	–	–	✓
W34	Heat Exchanger Module for installation on the left	–	–	–	–	–	–	–	–	–	–	–	–	–	–	–	✓
W36	Heat Exchanger Module for installation on the right	–	–	–	–	–	–	–	–	–	–	–	–	–	–	–	✓
W43	Release valve in the deionized water circuit	–	–	–	–	–	–	–	–	–	–	–	–	–	–	–	✓
W48	Leakage sensor in the converter cabinet, at the bottom in the cabinet floor	–	–	–	–	–	–	–	–	–	✓	✓	✓	✓	✓	–	–
W49	Leakage sensor in the Heat Exchanger Module	–	–	–	–	–	–	–	–	–	–	–	–	–	–	–	✓
W62	Sensors in the raw water circuit on the plant/system side	–	–	–	–	–	–	–	–	–	–	–	–	–	–	–	✓
Y09	Special paint finish for cabinet	✓	✓	✓	✓	–	✓	✓	✓	✓	✓	✓	✓	✓	✓	✓	✓
Y11	Factory-assembled transport units	✓	✓	✓	✓	–	✓	✓	✓	✓	✓	✓	✓	✓	✓	✓	–
Production flowcharts																	
B43	Document – Production flowchart: one issue	✓	✓	✓	✓	–	✓	✓	✓	✓	✓	✓	✓	✓	✓	✓	✓
B44	Document – Production flowchart: updated every two weeks	✓	✓	✓	✓	–	✓	✓	✓	✓	✓	✓	✓	✓	✓	✓	✓
B45	Document – Production flowchart: updated every month	✓	✓	✓	✓	–	✓	✓	✓	✓	✓	✓	✓	✓	✓	✓	✓
Packaging options																	
B55	Generation of a preliminary and a final packing list (shipping)	✓	✓	✓	✓	–	✓	✓	✓	✓	✓	✓	✓	✓	✓	✓	✓
B56	Packed items labeled with a customized label	✓	✓	✓	✓	–	✓	✓	✓	✓	✓	✓	✓	✓	✓	✓	✓
B57	Photo documentation of the ordered units	✓	✓	✓	✓	–	✓	✓	✓	✓	✓	✓	✓	✓	✓	✓	✓
Mechanical options for DC busbar system																	
M80	DC busbar system (I_d = 1170 A, 1 × 60 × 10 mm)	✓	✓	✓	✓	–	✓	✓	✓	✓	✓	✓	✓	✓	✓	✓	–
M81	DC busbar system (I_d = 1500 A, 1 × 80 × 10 mm)	✓	✓	✓	✓	–	✓	✓	✓	✓	✓	✓	✓	✓	✓	✓	–
M82	DC busbar system (I_d = 1840 A, 1 × 100 × 10 mm)	✓	✓	✓	✓	–	✓	✓	✓	✓	✓	✓	✓	✓	✓	✓	–
M83	DC busbar system (I_d = 2150 A, 2 × 60 × 10 mm)	✓	✓	✓	✓	–	✓	✓	✓	✓	✓	✓	✓	✓	✓	✓	–
M84	DC busbar system (I_d = 2730 A, 2 × 80 × 10 mm)	✓	✓	✓	✓	–	✓	✓	✓	✓	✓	✓	✓	✓	✓	✓	–
M85	DC busbar system (I_d = 3320 A, 2 × 100 × 10 mm)	✓	✓	✓	✓	–	✓	✓	✓	✓	✓	✓	✓	✓	✓	✓	–
M86	DC busbar system (I_d = 3720 A, 3 × 80 × 10 mm)	✓	✓	✓	✓	–	✓	✓	✓	✓	✓	✓	✓	✓	✓	✓	–
M87	DC busbar system (I_d = 4480 A, 3 × 100 × 10 mm)	✓	✓	✓	✓	–	✓	✓	✓	✓	✓	✓	✓	✓	✓	✓	–
M88	DC busbar system for line-side Cabinet Modules	–	–	–	–	–	–	–	–	–	✓	✓	✓	–	–	–	–

✓	Option can be ordered for this Cabinet Module
–	Option cannot be ordered for this Cabinet Module

© Siemens 2024

Overview

SINAMICS S120 Cabinet Modules		Air-cooled Cabinet Modules									Liquid-cooled Cabinet Modules						
Order code	Options	Line Connection Module	Basic Line Module	Smart Line Module	Active Line Module with Active Interface Module	Motor Module Booksize (Cabinet Kit)	Motor Module Booksize (Base Cabinet)	Motor Module Chassis	Central Braking Module	Auxiliary Power Supply Module	Basic Line Connection Module	Active Line Connection Module	Active Line Connection Module compact	Motor Module	Motor Module compact	Auxiliary Power Supply Module	Heat Exchanger Module
Documentation																	
D00	Documentation in German	✓	✓	✓	✓	–	✓	✓	✓	✓	✓	✓	✓	✓	✓	✓	✓
D01	Customer documentation (circuit diagram, layout diagram, dimension drawing, spare parts list) in EPLAN format.	✓	✓	✓	✓	–	✓	✓	✓	✓	✓	✓	✓	✓	✓	✓	✓
D02	Customer documentation (circuit diagram, terminal diagram, layout diagram) in DXF format	✓	✓	✓	✓	–	✓	✓	✓	✓	✓	✓	✓	✓	✓	✓	✓
D14	Preliminary version of customer documentation in PDF format	✓	✓	✓	✓	–	✓	✓	✓	✓	✓	✓	✓	✓	✓	✓	✓
D56	Documentation in Russian	✓	✓	✓	✓	–	✓	✓	✓	✓	✓	✓	✓	✓	✓	✓	✓
D58	Documentation in English/French	✓	✓	✓	✓	–	✓	✓	✓	✓	✓	✓	✓	✓	✓	✓	✓
D60	Documentation in English/Spanish	✓	✓	✓	✓	–	✓	✓	✓	✓	✓	✓	✓	✓	✓	✓	✓
D72	Documentation in Italian	✓	✓	✓	✓	–	✓	✓	✓	✓	✓	✓	✓	✓	✓	✓	✓
D77	Documentation in French	✓	✓	✓	✓	–	✓	✓	✓	✓	✓	✓	✓	✓	✓	✓	✓
D78	Documentation in Spanish	✓	✓	✓	✓	–	✓	✓	✓	✓	✓	✓	✓	✓	✓	✓	✓
D80	Documentation in English/Italian	✓	✓	✓	✓	–	✓	✓	✓	✓	✓	✓	✓	✓	✓	✓	✓
D84	Documentation in Chinese	✓	✓	✓	✓	–	✓	✓	✓	✓	✓	✓	✓	✓	✓	✓	✓
D91	Documentation in English/Chinese	✓	✓	✓	✓	–	✓	✓	✓	✓	✓	✓	✓	✓	✓	✓	✓
D93	Documentation in English/Portuguese (Brazil)	✓	✓	✓	✓	–	✓	✓	✓	✓	–	–	–	–	–	–	–
D94	Documentation in English/Russian	✓	✓	✓	✓	–	✓	✓	✓	✓	✓	✓	✓	✓	✓	✓	✓
Labeling plates																	
T58	Rating plate data in English/French	✓	✓	✓	✓	–	✓	✓	✓	✓	✓	✓	✓	✓	✓	✓	✓
T60	Rating plate data in English/Spanish	✓	✓	✓	✓	–	✓	✓	✓	✓	✓	✓	✓	✓	✓	✓	✓
T80	Rating plate data in English/Italian	✓	✓	✓	✓	–	✓	✓	✓	✓	✓	✓	✓	✓	✓	✓	✓
T83	Rating plate data in English/Portuguese (Brazil)	✓	✓	✓	✓	–	✓	✓	✓	✓	–	–	–	–	–	–	–
T85	Rating plate data in English/Russian	✓	✓	✓	✓	–	✓	✓	✓	✓	✓	✓	✓	✓	✓	✓	✓
T91	Rating plate data in English/Chinese	✓	✓	✓	✓	–	✓	✓	✓	✓	✓	✓	✓	✓	✓	✓	✓
Y31	One-line label for system identification, 40 × 80 mm	✓	✓	✓	✓	–	✓	✓	✓	✓	✓	✓	✓	✓	✓	✓	✓
Y32	Two-line label for system identification, 40 × 180 mm	✓	✓	✓	✓	–	✓	✓	✓	✓	✓	✓	✓	✓	✓	✓	✓
Y33	Four-line label for system identification, 40 × 180 mm	✓	✓	✓	✓	–	✓	✓	✓	✓	✓	✓	✓	✓	✓	✓	✓

✓	Option can be ordered for this Cabinet Module
–	Option cannot be ordered for this Cabinet Module

© Siemens 2024

Overview

SINAMICS S120 Cabinet Modules		Air-cooled Cabinet Modules									Liquid-cooled Cabinet Modules						
Order code	Options	Line Connection Module	Basic Line Module	Smart Line Module	Active Line Module with Active Interface Module	Motor Module Booksize (Cabinet Kit)	Motor Module Booksize (Base Cabinet)	Motor Module Chassis	Central Braking Module	Auxiliary Power Supply Module	Basic Line Connection Module	Active Line Connection Module	Active Line Connection Module compact	Motor Module	Motor Module compact	Auxiliary Power Supply Module	Heat Exchanger Module
Converter acceptance inspection																	
F03	Visual acceptance	✓	✓	✓	✓	–	✓	✓	✓	✓	✓	✓	✓	✓	✓	✓	✓
F71	Function test without motor (witnessed by customer)	✓	✓	✓	✓	–	✓	✓	✓	✓	✓	✓	✓	✓	✓	✓	✓
F72	Function test without motor (not witnessed by customer)	✓	✓	✓	✓	–	✓	✓	✓	✓	✓	✓	✓	✓	✓	✓	✓
F74	Function test with test bay motor in no-load operation (not witnessed by customer) [12]	✓	✓	✓	✓	–	✓	✓	–	–	✓	✓	✓	✓	✓	–	–
F75	Function test with test bay motor in no-load operation (witnessed by customer) [12]	✓	✓	✓	✓	–	✓	✓	–	–	✓	✓	✓	✓	✓	–	–
F76	Insulation test (not witnessed by customer)	✓	✓	✓	✓	–	✓	✓	✓	✓	✓	✓	✓	✓	✓	✓	✓
F77	Insulation test (witnessed by customer)	✓	✓	✓	✓	–	✓	✓	✓	✓	✓	✓	✓	✓	✓	✓	✓
F97	Customer-specific acceptance inspections (on request)	✓	✓	✓	✓	–	✓	✓	✓	✓	✓	✓	✓	✓	✓	✓	✓
Options specific to the shipbuilding industry																	
B50	Creation of material declaration Green Passport	[13]	[13]	[13]	[13]	[13]	[13]	[13]	[13]	[13]	✓	✓	✓	✓	✓	✓	✓
E51	Individual certificate from DNV	[13]	[13]	[13]	[13]	[13]	[13]	[13]	[13]	[13]	✓	✓	✓	✓	✓	✓	✓
E61	Individual certificate from American Bureau of Shipping (ABS)	[13]	[13]	[13]	[13]	[13]	[13]	[13]	[13]	[13]	✓	✓	✓	✓	✓	✓	✓
E71	Individual certificate from China Classification Society (CCS)	[13]	[13]	[13]	[13]	[13]	[13]	[13]	[13]	[13]	✓	✓	✓	✓	✓	✓	✓
M16	Dust protection packaging	[13]	[13]	[13]	[13]	[13]	[13]	[13]	[13]	[13]	✓	✓	✓	✓	✓	✓	–
M45	Cable entry via MCT frame	[13]	[13]	[13]	[13]	[13]	[13]	[13]	[13]	[13]	✓	✓	✓	✓	✓	✓	–
M66	Marine version	[13]	[13]	[13]	[13]	[13]	[13]	[13]	[13]	[13]	✓	✓	✓	✓	✓	✓	✓

✓	Option can be ordered for this Cabinet Module
–	Option cannot be ordered for this Cabinet Module

[1] Only in conjunction with option **K90** or **K95**.

[2] Not for Line Modules mounted on the left of the Line Connection Modules

[3] Option **G56** cannot be selected for Active Line Modules in frame sizes FX and GX.

[4] For Basic Line Modules for cable lengths < 100 m (328 ft). Not for a parallel connection of Line Modules to a common Line Connection Module.

[5] For rated currents ≤ 800 A.

[6] Only with option **L43** (for Basic Line Modules) and for rated currents ≤2000 A.

[7] For rated currents ≥ 800 A.

[8] For rated currents ≥ 2000 A.

[9] When Basic Line Modules are connected in parallel with a Line Connection Module, there is only space to fit a braking module in the right-hand Basic Line Module.

[10] Heat Exchanger Modules have degree of protection IP55 as standard.

[11] Can only be ordered for air-cooled Cabinet Modules. Liquid-cooled Cabinet Modules incorporate additional touch protection as a standard feature.

[12] For a function test with test-bay motor, the motor is connected to Motor Modules in chassis format and/or Motor Modules in booksize format in the Base Cabinet.

[13] On request

© Siemens 2024

Overview

Option selection matrix

Certain options are mutually exclusive.
Options that are not affected are not shown.

✓	Possible combination
–	Combination not possible

Electrical options

	G20	G33	G62	K90	K95
G20		–	–	✓	✓
G33	–		–	✓	✓
G62	–	–		✓	✓
K90	✓	✓	✓		–
K95	✓	✓	✓	–	

	L61/64	L62/65
L61/64		–
L62/65	–	

	L07	L08	L09 [1]	L10	L34	L37
L07		–	–	–	–	✓
L08	–		–	–	✓	✓
L09 [1]	–	–		–	–	✓
L10	–	–	–		–	✓
L34	–	✓	–	–		✓
L37	✓	✓	✓	✓	✓	

[1] Option for Booksize Cabinet Kit only.

	G51 [1]	G52 [1]	G53 [1]	G54 [1]	G60 [1]	G61 [1]	K46 [1]	K48 [1]	K50 [1]	K51 [1]	K52 [1]	K87 [1]	K88 [2]
G51 [1]		✓	✓	✓	✓	✓	✓	✓	✓	✓	✓	✓	✓
G52 [1]	✓		✓	✓	✓	✓	✓	✓	✓	✓	✓	✓	✓
G53 [1]	✓	✓		✓	✓	–	✓	✓	✓	✓	–	✓	–
G54 [1]	✓	✓	✓		–	–	–	–	–	–	–	–	–
G60 [1]	✓	✓	✓	–		✓	✓	✓	✓	✓	✓	✓	✓
G61 [1]	✓	✓	–	–	✓		✓	✓	✓	✓	✓	✓	✓
K46 [1]	✓	✓	✓	–	✓	✓		✓	✓	✓	–	✓	✓
K48 [1]	✓	✓	✓	–	✓	✓	✓		✓	✓	✓	✓	✓
K50 [1]	✓	✓	✓	–	✓	✓	✓	✓		✓	✓	✓	✓
K51 [1]	✓	✓	✓	–	✓	✓	✓	✓	✓		✓	✓	✓
K52 [1]	✓	✓	–	–	✓	✓	✓	✓	✓	✓		✓	✓
K87 [1]	✓	✓	✓	–	✓	✓	✓	✓	✓	✓	✓		✓
K88 [2]	✓	✓	–	–	✓	✓	✓	✓	✓	✓	✓	✓	

[1] In total, a maximum of 4 options per Cabinet Module if option **K88** is not used.

[2] If option **K88** is selected, a maximum of 2 additional options are possible per Cabinet Module.

© Siemens 2024

Overview

Electrical options (Line Connection Module)

	K76	L13 [1]	L25 [2]	L41	L46 [3]	L47 [3]	P10	P11
K76		✓	✓	✓	–	✓	✓	✓
L13 [1]	✓		–	✓	–	–	✓	✓
L25 [2]	✓	–		✓	✓	✓	✓	✓
L41	✓	✓	✓		✓	✓	–	–
L46 [3]	–	–	✓	✓		✓	✓	✓
L47 [3]	✓	–	✓	✓	✓		✓	✓
P10	✓	✓	✓	–	✓	✓		–
P11	✓	✓	✓	–	✓	✓	–	

[1] Option for rated currents of ≤800 A only.
[2] Option for rated currents of >800 A only.
[3] Option for rated currents of ≥2000 A only.

Mechanical/electrical options

	L00	L22	L42	L43	L44	M06	M07	M21	M23	M26	M27	M43	M54	M55	M60	M66	M70	M90	Y11	Y31	Y32	Y33
L00		✓	✓	✓	✓	✓	✓	✓	✓	✓	✓	✓	✓	✓	✓	✓	[1]	✓	✓	✓	✓	✓
L22	✓		–	✓	–	✓	✓	✓	✓	✓	✓	✓	✓	✓	✓	✓	✓	✓	✓	✓	✓	✓
L42	✓	–		–	–	✓	✓	✓	✓	✓	✓	✓	✓	–	✓	[3]	✓	✓	✓	✓	✓	✓
L43	✓	✓	–		–	✓	✓	✓	✓	✓	✓	✓	✓	–	✓	[3]	✓	✓	✓	✓	✓	✓
L44	✓	–	–	–		✓	✓	✓	✓	✓	✓	✓	✓	–	✓	[3]	✓	✓	✓	✓	✓	✓
M06	✓	✓	✓	✓	✓		–	✓	✓	✓	✓	✓	✓	✓	✓	–	✓	✓	✓	✓	✓	✓
M07	✓	✓	✓	✓	✓	–		✓	✓	✓	✓	✓	✓	✓	✓	–	✓	✓	✓	✓	✓	✓
M21	✓	✓	✓	✓	✓	✓	✓		–	✓	✓	–	–	–	✓	–	✓	✓	✓	✓	✓	✓
M23	✓	✓	✓	✓	✓	✓	✓	–		✓	✓	–	–	–	– [2]	–	✓	✓	✓	✓	✓	✓
M26	✓	✓	✓	✓	✓	✓	✓	✓	✓		–	✓	✓	✓	✓	✓	✓	✓	✓	✓	✓	✓
M27	✓	✓	✓	✓	✓	✓	✓	✓	✓	–		✓	✓	✓	✓	✓	✓	✓	✓	✓	✓	✓
M43	✓	✓	✓	✓	✓	✓	✓	–	–	✓	✓		–	–	– [2]	✓	✓	✓	✓	✓	✓	✓
M54	✓	✓	✓	✓	✓	✓	✓	–	–	✓	✓	–		–	– [2]	✓	✓	✓	✓	✓	✓	✓
M55	✓	✓	–	–	–	✓	✓	–	–	✓	✓	–	–		–	✓	✓	✓	✓	✓	✓	✓
M60	✓	✓	✓	✓	✓	✓	✓	✓	– [2]	✓	✓	– [2]	– [2]	–		✓	✓	✓	✓	✓	✓	✓
M66	✓	✓	[3]	[3]	[3]	–	–	–	–	✓	✓	✓	✓	✓	✓		✓	✓	✓	✓	✓	✓
M70	[1]	✓	✓	✓	✓	✓	✓	✓	✓	✓	✓	✓	✓	✓	✓	✓		✓	✓	✓	✓	✓
M90	✓	✓	✓	✓	✓	✓	✓	✓	✓	✓	✓	✓	✓	✓	✓	✓	✓		–	✓	✓	✓
Y11	✓	✓	✓	✓	✓	✓	✓	✓	✓	✓	✓	✓	✓	✓	✓	✓	✓	–		✓	✓	✓
Y31	✓	✓	✓	✓	✓	✓	✓	✓	✓	✓	✓	✓	✓	✓	✓	✓	✓	✓	✓		–	–
Y32	✓	✓	✓	✓	✓	✓	✓	✓	✓	✓	✓	✓	✓	✓	✓	✓	✓	✓	✓	–		–
Y33	✓	✓	✓	✓	✓	✓	✓	✓	✓	✓	✓	✓	✓	✓	✓	✓	✓	✓	✓	–	–	

[1] Option **L00** includes option **M70**.
[2] Option **M60** is already included in **M23**, **M43** and **M54** for all Line Modules and Motor Modules in chassis format.
[3] On request

© Siemens 2024

Overview

DC busbar system mechanical options (busbars between individual Cabinet Modules)

	M80	M81	M82	M83	M84	M85	M86	M87
M80		–	–	✓	–	–	–	–
M81	–		–	–	✓	–	✓	–
M82	–	–		–	–	✓	–	✓
M83	✓	–	–		–	–	–	–
M84	–	✓	–	–		–	✓	–
M85	–	–	✓	–	–		–	✓
M86	–	✓	–	–	✓	–		–
M87	–	–	✓	–	–	✓	–	

Documentation

	D00	D01	D02	D14	D56	D58	D60	D72	D77	D78	D80	D84	D91	D93	D94
D00		✓	✓	✓	✓	✓	✓	✓	✓	✓	✓	✓	✓	✓	✓
D01	✓		✓	–	✓	✓	✓	✓	✓	✓	✓	✓	✓	✓	✓
D02	✓	✓		✓	✓	✓	✓	✓	✓	✓	✓	✓	✓	✓	✓
D14	✓	–	✓		✓	✓	✓	✓	✓	✓	✓	✓	✓	✓	✓
D56	✓	✓	✓	✓		✓	✓	✓	✓	✓	✓	✓	✓	✓	–
D58	✓	✓	✓	✓	✓		–	✓	–	✓	–	✓	–	–	–
D60	✓	✓	✓	✓	✓	–		✓	✓	–	–	✓	–	–	–
D72	✓	✓	✓	✓	✓	✓	✓		✓	✓	–	✓	✓	✓	✓
D77	✓	✓	✓	✓	✓	–	✓	✓		✓	✓	✓	✓	✓	✓
D78	✓	✓	✓	✓	✓	✓	–	✓	✓		✓	✓	✓	✓	✓
D80	✓	✓	✓	✓	✓	–	–	–	✓	✓		✓	–	–	–
D84	✓	✓	✓	✓	✓	✓	✓	✓	✓	✓	✓		–	✓	✓
D91	✓	✓	✓	✓	✓	–	–	✓	✓	✓	–	–		–	–
D93	✓	✓	✓	✓	✓	–	–	✓	✓	✓	–	✓	–		–
D94	✓	✓	✓	✓	–	–	–	✓	✓	✓	–	✓	–	–	

© Siemens 2024

Options

B43, B44, B45
Production flowcharts

Production flowcharts are provided with options **B43** to **B45**. After the order has been clarified, these are emailed as a dual language (English/German) PDF file.

Option	Description
B43	Documentation – Production flowchart: one issue
B44	Documentation – Production flowchart: updated every two weeks
B45	Documentation – Production flowchart: updated every month

B50
Creation of material declaration Green Passport

This option creates a form for the material declaration according to Green Passport.
The subject matter of the declaration described is in line with the guidelines for the establishment of the inventory of hazardous materials - Resolution MEPC.269(68).

B55
Generation of a preliminary and a final packing list (shipping)

This option provides the electronically editable packing list (possibly predefined from the factory) with the following information in Excel format:

- Number of individual packages
- Type of package (pallet, crate, etc.)
- Weight (unpacked and packed)
- Dimensions (unpacked and packed)
- Delivery location
- Label for package item (when option B56 is ordered)
- Description of what is in the package

A first packing list is generated after complete technical clarification with preliminary data. When shipped, a final packing list is provided with the actual data.

B56
Packed items labeled with a customized label

With this option, customized labels are attached to the unpacked and packed packaged units. Internal customers must provide two labels at least 2 weeks before the shipping date (printout to the factory logistics department, specifying the article number).

B57
Photographic documentation of the ordered units

This option provides digital photographic documentation with the following content:

- 1 photo diagonally from the front
- 1 photo diagonally from the rear (opposite)
- 1 photo with the packed item on which the label is legible

The listed photos of the packed items are taken in both an unpacked and a packed state in each position (a total of 6 photos per packed item).

C95, C97
Power supply voltage for the Heat Exchanger Module with 60 Hz

With the option **C95**, Heat Exchanger Modules are provided for power supply voltages of 440 V to 480 V 3 AC at 60 Hz.

With the option **C97** for line voltages of 500 to 690 V 3 AC/60 Hz, the voltage is adapted to the 440 V to 480 V 3 AC/60 Hz supply voltage of the pump using a transformer.

D01
Customer documentation (circuit diagram, layout diagram, dimension drawing, spare parts list) in EPLAN format

When ordering the option **D01**, the final version of the cabinet circuit diagram, layout diagram, dimension drawing and spare parts list in EPLAN format (current software version) will be digitally delivered.

D02
Customer documentation (circuit diagram, terminal diagram, layout diagram) in DXF format

Option **D02** can be used to order documents such as circuit diagrams, terminal diagrams, layout diagrams, and dimension drawings in DXF format, e.g. for further processing in CAD systems.

D14
Preliminary version of customer documentation in PDF format

If documents such as circuit diagrams, terminal diagrams, layout diagrams and dimension drawings are required in advance for the purpose of system engineering (integration of drive into higher-level systems, interface definition, installation, building planning, etc.), it is possible to order a draft copy of the documentation when ordering the Cabinet Modules. These documents are then supplied electronically a few working days following receipt of the order. If the order includes options that fall outside the scope of standard supply, these will not be covered by the documentation due to the obvious time constraints.

The client is sent the documentation relating to the order by email. The recipient's email address must be specified with the order for this purpose. In the email, the recipient will also receive a link for downloading order-specific documentation.
With the option **D02**, the documents are also delivered in DXF format.

D58, D60, D74, D80, D91, D93, D94
Documentation as language package

If a documentation option is not selected, the relevant documentation is supplied as standard in English/German (**D74**). When one of the options specified in the table is selected, the standard documentation language will be changed from English/German to the language combination provided by the option.

Order code	Language
D58	English/French
D60	English/Spanish
D80	English/Italian
D91	English/Chinese
D93	English/Portuguese (Brazil)
D94	English/Russian

© Siemens 2024

Options

D00, D56, D72, D77, D78, D84
Documentation in a single language

In addition to the ordered language package the documentation is also available in a single language, for example, to be able to order other language combinations.

For example, in addition to the English/German standard documentation (**D74**), an additional language, e.g. Spanish (**D78**), can also be ordered.

Order code	Language
D00	German
D56	Russian
D72	Italian
D77	French
D78	Spanish
D84	Chinese

E51 to E71
Individual certification

For the Cabinet Modules, type certificates are available for the marine classification institutes DNV, ABS and CCS.
The option includes an additional individual certification of the Cabinet Modules by the respective certification institute.
With the respective option, the converter and the documentation are certified by an acceptor (certified recipient) for the respective institute and an individual certificate is created.

- **E51** Individual certificate from DNV
- **E61** Individual certificate from American Bureau of Shipping (ABS)
- **E71** Individual certificate from China Classification Society (CCS)

Note:
Several individual certificates can be combined.

In addition, the respective option for individual certification must be ordered with the article number of the corresponding S120 Cabinet Module for capacity planning.

The option **M66** Marine version must be ordered separately.

F03, F71, F72, F74, F75, F76, F77, F97
Converter acceptance inspections

Order code	Description
F03	**Visual acceptance** The inspection includes the following: • Check of degree of protection • Check of equipment (components) • Check of equipment identifiers • Check of clearance and creepage distances • Check of cables • Check of customer documentation • Submission of the acceptance report All the above checks are performed with the equipment in a no-voltage condition.
F71 (witnessed by customer) **F72** (not witnessed by customer)	**Function test without motor** After the visual acceptance with the converter switched off, the converter is connected to rated voltage. No current at the converter output end. The inspection includes the following: • Visual acceptance as described for option **F03** • Check of power supply • Check of protective and monitoring devices (simulation) • Check of fans • Pre-charging test • Function test without connected motor • Submission of the acceptance report
F74 (not witnessed by customer) **F75** (witnessed by customer)	**Function test with test bay motor under no-load conditions** After the visual acceptance with the converter switched off, the converter is connected to rated voltage. A small current flows at the converter output end in order to operate the test bay motor under no-load conditions. The inspection includes the following: • Visual acceptance as described for option **F03** • Check of power supply • Check of protective and monitoring devices (simulation) • Check of fans • Function test with test bay motor under no-load conditions • Submission of the acceptance report
F76 (not witnessed by customer) **F77** (witnessed by customer)	**Insulation test of the equipment** The inspection includes the following: • High-voltage test • Measurement of the insulation resistance • Submission of the acceptance report
F97	**Customer-specific acceptance inspections (on request)** If acceptance inspections that are not covered by the options **F03**, **F71/F72**, **F74/F75** or **F76/F77** are required, then customer-specific acceptance inspections/supplementary tests can be ordered using order code **F97** on request and following technical clarification.

Note:
The options for converter acceptance must be ordered separately for each Cabinet Module and each order position.

© Siemens 2024

Options

G33
CBE20 Communication Board

The CBE20 Communication Board can be used to connect the SINAMICS S120 Cabinet Modules to a PROFINET-IO, EtherNet/IP or Modbus TCP network via a CU320-2 Control Unit. The CBE20 Communication Board plugs into the option slot on the CU320-2 Control Unit.

The CBE20 Communication Board can only be ordered as option **G33** in conjunction with a CU320-2 Control Unit (option **K90** or **K95**) and is supplied in an accessories pack for possible configuration.
A combination with option **G62** (TB30) is not possible.

Note:
Only one communication interface can be used in isochronous operation when operating the Communication Board CBE20 in a Control Unit CU320-2.

- CU320-2 DP: Either the DP interface of the Control Unit or the PN interfaces of the CBE20
- CU320-2 PN: Either the internal PN interfaces or the external PN interfaces of the CBE20

Description of the CBE20 Communication Board → Chassis format units → System components → Supplementary system components.

G51 to G54
TM150 temperature sensor evaluation unit

Options **G51** to **G54** can be used to order between one and four TM150 Terminal Modules for sensing and evaluating several temperature sensors.

Order code	Option
G51	1 x TM150 temperature sensor evaluation unit
G52	2 x TM150 temperature sensor evaluation units
G53	3 x TM150 temperature sensor evaluation units
G54	4 x TM150 temperature sensor evaluation units

The TM150 Terminal Module is a DRIVE-CLiQ component for temperature evaluation. The temperature is measured in a temperature range from -99 °C to +250 °C for the following temperature sensors:

- Pt100 (with monitoring for wire breaks and short-circuits)
- Pt1000 (with monitoring for wire breaks and short-circuits)
- KTY84 (with monitoring for wire breaks and short-circuits)
- PTC (with monitoring for short-circuit)
- Bimetallic NC contact (without monitoring)

For the temperature sensor inputs, for each terminal block the evaluation can be parameterized for 1×2-wire, 2×2-wire, 3-wire or 4-wire. There is no galvanic isolation in the TM150.

A maximum of 12 temperature sensors can be connected to the TM150 Terminal Module.

Description of the TM150 Terminal Module → SINAMICS S120 chassis format units → System components → Supplementary system components.

G56
Contactor monitoring

The option is used for monitoring the pre-charging and bypass contactors of the Line Modules, mainly for infeeds connected in parallel.

Note:
Option **G56** cannot be selected for Active Line Modules in frame sizes FX and GX.

G60
TM31 Terminal Module

The TM31 Terminal Module is used to expand the customer terminal.

The following additional interfaces are available:

- 8 digital inputs
- 4 bidirectional digital inputs/outputs
- 2 relay outputs with changeover contact
- 2 analog inputs
- 2 analog outputs
- 1 temperature sensor input (KTY84-130/PTC)
- 2 DRIVE-CLiQ sockets
- 1 connection for the electronics power supply via the 24 V DC supply connector
- 1 PE/protective conductor connection

To simplify configuration and commissioning of the drive, the optional TM31 Terminal Module is already preset with various factory settings, which can then be selected when commissioning the system.

Description of the TM31 Terminal Module → SINAMICS S120 chassis format units → System components → Supplementary system components.

For additional information, please refer to the SINAMICS Low Voltage Engineering Manual.

G61
Additional TM31 Terminal Module

With option **G61**, the number of digital inputs/outputs, as well as the number of analog inputs/outputs in the drive system can be expanded using a second TM31 Terminal Module (in addition to the TM31 Terminal Module that can be selected using option **G60**).

Note:
Option **G61** requires option **G60**.

G62
TB30 Terminal Board

The TB30 Terminal Board provides a way of adding digital inputs/digital outputs and analog inputs/analog outputs to the Control Unit. The TB30 Terminal Board plugs into the option slot on the Control Unit.

The following are located on the TB30 Terminal Board:

- Power supply for digital inputs/digital outputs
- 4 digital inputs
- 4 digital outputs
- 2 analog inputs
- 2 analog outputs

The TB30 Terminal Board can only be ordered in conjunction with a CU320-2 Control Unit (option **K90** or **K95**). A combination with options **G20** and **G33** is not possible.

Description of the TB30 Terminal Board → SINAMICS S120 chassis format units → System components → Supplementary system components.

© Siemens 2024

Options

K01 to K05
Safety license Extended Functions for 1 to 5 axes

The Safety Integrated Basic Functions do not require a license. However, the Safety Integrated Extended Functions require a license for each axis equipped with safety functions. It is irrelevant which safety functions are used and how many.

Option **K01** includes the license for 1 axis, **K02** for 2 axes, etc. up to option **K05** for 5 axes.

The required licenses can be optionally ordered with the CompactFlash card.

Subsequent licensing is possible online via the WEB License Manager by generating a license key:

www.siemens.com/automation/license

K08
AOP30 Advanced Operator Panel installed in the cabinet door

The AOP30 Advanced Operator Panel is an optional input/output device for the Cabinet Modules. If, for the Cabinet Module or the Booksize Cabinet Kit, an autonomous closed-control (option **K90** or **K95**) is selected, this module can be assigned to its own operator panel with option **K08**.

The AOP30 Advanced Operator Panel is installed in the cabinet door of each Cabinet Module.

Description of the AOP30 → Chassis format units → System components → Supplementary system components.

K46
SMC10 Sensor Module Cabinet-Mounted

The SMC10 Sensor Module Cabinet-Mounted can be used to simultaneously sense the speed and the rotor position angle. The signals received from the resolver are converted here and made available to the closed-loop controller via the DRIVE-CLiQ interface for evaluation purposes.

The following encoder signals can be evaluated:

- 2-pole resolver
- Multi-pole resolver

The motor temperature can also be measured using KTY84-130, Pt1000 or PTC thermistors.

Description of the SMC10 Sensor Module Cabinet-Mounted → Chassis format units → System components → Supplementary system components.

K48
SMC20 Sensor Module Cabinet-Mounted

The SMC20 Sensor Module Cabinet-Mounted can be used to simultaneously sense the speed and position. The signals received from the incremental encoder are converted here and made available to the closed-loop controller via the DRIVE-CLiQ interface for evaluation purposes.

The following encoder signals can be evaluated:

- Incremental encoder sin/cos 1 V_{pp}
- Absolute encoder EnDat 2.1
- SSI encoder with incremental signals sin/cos 1 V_{pp}

The motor temperature can also be measured using KTY84-130, Pt1000 or PTC thermistors.

Description of the SMC20 Sensor Module → Chassis format units → System components → Supplementary system components.

K50
SMC30 Sensor Module Cabinet-Mounted

The SMC30 Sensor Module Cabinet-Mounted can be used to evaluate the encoders of motors without a DRIVE-CLiQ interface. External encoders can also be connected via the SMC30.

The following encoder signals can be evaluated:

- Incremental encoders TTL/HTL with and without open-circuit detection (open-circuit detection is only available with bipolar signals)
- SSI encoders with TTL/HTL incremental signals
- SSI encoders without incremental signals

The motor temperature can also be measured using KTY84-130, Pt1000 or PTC thermistors.

Description of the SMC30 Sensor Module → Chassis format units → System components → Supplementary system components.

K51
VSM10 Voltage Sensing Module

The VSM10 Voltage Sensing Module is used to measure the voltage characteristic on the motor side, so that the following function can be implemented:

- Operation of a permanent-magnet synchronous motor without encoder with the requirement to be able to connect to a motor that is already running (flying restart function)
- Quick flying restart of large induction motors: The voltage sensing function eliminates the delay incurred by demagnetization of the motor.

Description of the VSM10 Voltage Sensing Module → Chassis format units → System components → Supplementary system components.

K52
Second SMC30 Sensor Module Cabinet-Mounted

With option **K50**, the cabinet unit contains an SMC30 Sensor Module Cabinet-Mounted. An additional SMC30 (option **K52**) enables reliable actual-value acquisition when Safety Integrated extended functions are used (requires a license: options **K01** to **K05**).

Detailed and comprehensive instructions and information for the Safety Integrated functions can be found in the associated Function Manual.

© Siemens 2024

Options

K70
Fan power supply

With option **K70**, the line voltage supply for the 400 V 3 AC auxiliary power supply system is tapped downstream of the circuit breaker and protected by a motor starter protector.

The voltages 230 V 1 AC and 24 V DC of the auxiliary power supply system are supplied externally on the plant side.

K73
SITOP power supply 24 V DC

The 24 V DC supply for standard Booksize Cabinet Kits is tapped from the auxiliary power supply.

With option **K73**, the 24 V DC supply is provided by a dedicated SITOP power supply unit.

K76
Auxiliary voltage generation in the Line Connection Module

Cabinet Modules require an auxiliary energy supply to function properly. This current demand must be included in the configuration and supplied from an external source. If an external supply is not possible, the required auxiliary voltages can be supplied by means of an Auxiliary Power Supply Module.

Alternatively, option **K76** can be selected. This provides for generation of auxiliary voltages in the Line Connection Module. This is particularly advisable for smaller device configurations.

With option **K76**, the following auxiliary voltages are provided:

	Air-cooled Cabinet Modules	Liquid-cooled Cabinet Modules
380 ... 480 V or 500 ... 690 V 2 AC	Possible tap for the following Line Connection Modules: • Line Connection Module with rated current up to 800 A: 35 A • Line Connection Module with rated current of 1000 to 1600 A: 50 A • Line Connection Module 6SL3700-0LE42-0AA3: 50 A • Line Connection Module with rated current of 2000 to 3200 A: 80 A	–
230 V 1 AC	Possible tap for the Line Connection Modules: • <800 A: approx. 4 A • > 800 A: approx. 6 A	Possible tap for Basic Line Connection Modules / Active Line Connection Modules • 4 ... 10 A
24 V DC	Possible tap for the Line Connection Modules: • <800 A: approx. 20 A • > 800 A: approx. 40 A	Possible tap for Basic Line Connection Modules / Active Line Connection Modules • 5 ... 20 A

The supply for the auxiliary power supply system is connected at the auxiliary voltage module of the Line Connection Module.

K82
Terminal Module for controlling the Safe Torque Off and Safe Stop 1 safety functions

The terminal module controls the Safety Integrated Basic Functions Safe Torque Off (STO) and Safe Stop 1 (SS1) (time-controlled) for a voltage of 24 V DC/AC (terminology as defined in IEC 61800-5-2). The relays used here are permitted up to an installation altitude of 2000 m. The use of this option for requirements that go beyond this is possible upon request.

The integrated safety functions, starting from the Safety Integrated (SI) input terminals of the components (Control Unit and Motor Module), satisfy the requirements of EN 61800-5-2, EN 60204-1, EN ISO 13849-1 Category 3 for Performance Level (PL) d and IEC 61508 SIL 2.

With option **K82**, the requirements specified in EN 61800-5-2, EN 60204-1, EN ISO 13849-1 Category 3 for Performance Level (PL) d and IEC 61508 SIL 2 are fulfilled.

The Safety Integrated functions using option **K82** are only available in conjunction with certified components and software versions.

The Safety Integrated functions of SINAMICS are generally certified by independent institutes. An up-to-date list of certified components is available on request from your local Siemens office.

K87
TM54F Terminal Module

The TM54F Terminal Module is a terminal expansion module with safe digital inputs and outputs to control the Safety Integrated functions.

The TM54F is directly connected to a Control Unit via DRIVE-CLiQ. Each Control Unit can be assigned precisely to one TM54F.

Note:
It is not permissible to connect Motor Modules or Line Modules to a TM54F.

The TM54F provides 4 fail-safe digital outputs and 10 fail-safe digital inputs. A fail-safe digital output consists of one 24 V DC switching output, one output switching to ground and one digital input to check the switching state. A fail-safe digital input consists of two digital inputs.

Description of the TM54F Terminal Module → SINAMICS S120 chassis format units → System components → Supplementary system components.

© Siemens 2024

Options

K88
SBA Safe Brake Adapter, 230 V AC

The Safe Brake Control (SBC) is a safety function that is used in safety-relevant applications, for example in presses or rolling mills. In the no-current state, the brake acts on the drive motor using spring force. The brake is released when current flows in it (low active).

The Safe Brake Adapter is already installed in the cabinet unit in the factory. An infeed is connected to terminal -X12 on the Safe Brake Adapter for the power supply. For control, a connection is established between the Safe Brake Adapter and the Control Interface Module in the factory using a cable harness.

On the plant side, to control the brake, a connection must be established between terminal -X14 on the Safe Brake Adapter and the brake.

Description of the SBA Safe Brake Adapter → SINAMICS S120 chassis format units → System components → Supplementary system components.

K90
CU320-2 DP Control Unit (PROFIBUS)

Option **K90** assigns a CU320-2 DP Control Unit incl. CompactFlash card to the Line Modules and Motor Modules. This unit handles the communication and open-loop/closed-loop control functions. DRIVE-CLiQ is used to establish a connection to the various modules and where required, to additional I/O modules. A PROFIBUS interface is available as standard for the higher-level communication.

The computational performance required from the Control Unit CU320-2 DP increases with the number of connected Motor Modules and system components – as well as the dynamic performance demanded.

Without performance expansion, it is generally possible to operate two Motor Modules with one Line Module.

The full computational performance of the CU320-2 DP is only available on systems with performance expansion (option **K94**).

Description of the CU320-2 DP Control Unit → SINAMICS S120 chassis format units → System components → Control Units.

K94
Performance expansion for CU320-2 Control Unit

With option **K94**, the CU320-2 Control Unit (option **K90** or **K95**) is supplied with a CompactFlash card with performance expansion. This therefore provides the full computational performance of the CU320-2 Control Unit.

In addition to the firmware, the CompactFlash card also contains licensing codes that are required to enable firmware options, for example, the performance expansion and the Safety Integrated Extended Functions.

K95
CU320-2 PN Control Unit (PROFINET)

Option **K95** assigns a CU320-2 PN Control Unit, incl. CompactFlash card, to the Line Modules and Motor Modules. This unit handles the communication and open-loop/closed-loop control functions. DRIVE-CLiQ is used to establish a connection to the various modules and where required, to additional I/O modules. A PROFINET interface is available for the higher-level communication.

The computational performance required from the CU320-2 PN Control Unit increases with the number of connected Motor Modules and system components – as well as the dynamic performance demanded.

Without performance expansion, it is generally possible to operate two Motor Modules with one Line Module.

The full computational performance of the CU320-2 PN is only available on systems with performance expansion (option **K94**).

Description of the CU320-2 DP Control Unit → SINAMICS S120 chassis format units → System components → Control Units.

L00
Use in the first environment according to EN 61800-3, Category C2 (TN/TT supply systems with grounded neutral point)

With option **L00**, the Line Modules have a line filter as well as additional measures installed in the factory; this means that the Cabinet Modules can also comply with the limit values for use in the first environment (Category C2) according to EN 61800-3.

Notes on the measures to be implemented by the customer are provided in the SINAMICS Low Voltage Engineering Manual.

In order to achieve the full filter effect, the optional line filter must always be used in conjunction with a line reactor.

To allow the shield of the power cables to be connected in conformance with EMC requirements, an additional EMC shield bus (option **M70**) is installed at the converter input.
A separate order is not required in this case.
For the converter output (Motor Module), the **M70** option must be ordered separately.

Note:
Option **L00** is not available for Line Modules in a parallel connection.

© Siemens 2024

Options

L07
dv/dt filter compact plus Voltage Peak Limiter

dv/dt filters compact plus VPL (**V**oltage **P**eak **L**imiter) limit the voltage rate of rise *dv/dt* to values of < 1600 V/µs and the typical peak voltage to the following values in accordance with the limit value curve A according to IEC 60034-25: 2007:

- < 1150 V at U_{line} < 575 V
- <1400 V at 660 V < U_{line} < 690 V

The dv/dt filter compact plus VPL functionally consists of two components that are supplied as a compact mechanical unit, the dv/dt reactor and the voltage limiting network (VPL), which limits voltage peaks and feeds back the energy to the DC link.

It is so compact that it can be completely integrated into the cabinet, even for high power ratings. An additional cabinet is not required.

By using a dv/dt filter compact plus VPL, standard motors with standard insulation and without insulated bearings can be used with supply voltages up to 690 V in converter operation.

The power losses stated in system component section System components → Motor-side components → dv/dt filters compact plus VPL can be used to determine the total losses for engineering purposes.

dv/dt filters compact plus VPL are designed for the following maximum motor cable lengths:

- Shielded cables 100 m (e.g. Protodur NYCWY)
- Unshielded cables 150 m (e.g. Protodur NYY)

For longer cable lengths (> 100 m shielded, >150 m unshielded), the dv/dt filter plus VPL (option **L10**) should be used.

Notice:

- Operation with output frequencies <10 Hz is permissible for max. 5 min.
- The maximum permissible output frequency is 150 Hz.

When using dv/dt filters, restrictions regarding permissible pulse frequencies must be observed.

Please also note the relevant information provided in the SINAMICS Low Voltage Engineering Manual.

Note:
Option **L07** cannot be combined with the following options:

- **L08** (motor reactor)
- **L10** (dv/dt filter plus VPL)

L08
Motor reactor

Motor reactors reduce the voltage load on the motor windings by reducing the voltage gradients at the motor terminals that occur during converter operation. At the same time, the capacitive charge/discharge currents that place an additional load at the Motor Module output when using long motor cables, are reduced.

Suitably dimensioned motor reactors or a series connection of several motor reactors make it possible to connect larger capacitances and thus allow the use of longer motor cables.

In the case of multi-motor drives, the use of motor reactors is recommended as a general principle.

The motor reactor is accommodated in the Cabinet Module. An additional 600-mm-wide cabinet located to the right of the Motor Module is only required for the chassis format in frame sizes HX and JX.

The power losses stated in the section System components > Motor-side components > Motor reactors can be used to determine the total losses for engineering purposes.

Note:
The terminal lugs of the reactors are not nickel-plated.

Option **L08** cannot be combined with the following options:

- **L07** (dv/dt filter compact plus VPL)
- **L10** (dv/dt filter plus VPL)

For Motor Modules in chassis format, the maximum cable lengths when using motor reactors are 300 m (shielded) or 450 m (unshielded).

For Motor Modules in Booksize Cabinet Kit format, by using motor reactors (option **L08**) the maximum motor cable lengths, specified in the following table, can be reached:

Booksize Cabinet Kit	Rated output current of Motor Module	**Maximum motor cable length** when using motor reactors for Booksize Cabinet Kits					
		Shielded cable			Unshielded cable		
		Without reactor	With one reactor (option **L08**)	With two reactors in series (option **L09**)	Without reactor	With one reactor (option **L08**)	With two reactors in series (option **L09**)
6SL3720-...	A	m (ft)	m (ft)	m (ft)	m (ft)	m (ft)	m (ft)
1TE21-0AB3	9	50 (164)	135 (443)	–	75 (246)	200 (656)	–
1TE21-8AB3	18	70 (230)	160 (525)	320 (1050)	100 (328)	240 (787)	480 (1575)
1TE23-0AB3	30	100 (328)	190 (623)	375 (1230)	150 (492)	280 (919)	560 (1837)
1TE24-5AB3	45	100 (328)	200 (656)	400 (1312)	150 (492)	300 (984)	600 (1969)
1TE26-0AB3	60	100 (328)	200 (656)	400 (1312)	150 (492)	300 (984)	600 (1969)
1TE28-5AB3	85	100 (328)	200 (656)	400 (1312)	150 (492)	300 (984)	600 (1969)
1TE31-3AB3	132	100 (328)	200 (656)	400 (1312)	150 (492)	300 (984)	600 (1969)

© Siemens 2024

Options

L09
Two motor reactors in series

With option **L09** for Booksize Cabinet Kits, two motor reactors are used in series that can be located within the standard width of the Cabinet Kit.

The maximum permissible motor cable lengths when using option L09 are specified in the table under option **L08**.

Note:
The terminal lugs of the reactors are not nickel-plated.

L10
dv/dt filter plus Voltage Peak Limiter

A dv/dt filter plus VPL (**V**oltage **P**eak **L**imiter) limits the voltage rate of rise *dv/dt* to values < 500 V/µs and the typical peak voltage to the following values in accordance with the limit value curve according to IEC/TS 60034-17: 2006:

- < 1000 V at U_{line} < 575 V
- <1250 V at 660 V < U_{line} < 690 V

The dv/dt filter plus VPL functionally consists of two components, the dv/dt reactor and the voltage limiting network (VPL), which limits voltage peaks and feeds the energy back to the DC link.

Option **L10** is installed in an additional cabinet with a width of 600 mm that is located on the right-hand side of the Motor Module.

By using a dv/dt filter plus VPL, standard motors with standard insulation and without insulated bearings can be used with supply voltages up to 690 V in converter operation.

dv/dt filters plus VPL are designed for the following maximum motor cable lengths:

- Shielded cable (e.g. Protodur NYCWY)
  - Motor Modules, frame sizes FX to HX: 300 m
  - Motor Modules, frame size JX: 150 m
- Unshielded cables (e.g. Protodur NYY)
  - Motor Modules, frame sizes FX to HX: 450 m
  - Motor Modules, frame size JX: 225 m

For cable lengths < 100 m shielded or < 150 m unshielded, the dv/dt filter compact plus VPL (option **L07**) can be used advantageously.

The power losses stated in the section System components > Motor-side components > dv/dt filters plus VPL can be used to determine the total losses for engineering purposes.

Notice:
The maximum permissible output frequency is 150 Hz.

When using dv/dt filters, restrictions regarding permissible pulse frequencies must be observed.
Please also note the relevant information provided in the SINAMICS Low Voltage Engineering Manual.

Note:
Parts of option **L10** do not have nickel-plated copper busbars.
Option **L10** cannot be combined with the following options:

- **L07** (dv/dt filter compact plus VPL)
- **L08** (motor reactor)

L13
Main contactor (for supply currents ≤ 800 A)

Line Connection Modules for current ratings up to 800 A feature only a manually operated fuse switch disconnector as standard. Option **L13** is needed if a switching element is also required for disconnecting the cabinet from the supply (needed for EMERGENCY OFF). The contactor is controlled by the closed-loop control in this case. Option **L13** can be ordered for Line Connection Modules together with Basic Line Modules (option **L43**). With Smart Line Modules and Active Line Modules, the contactor is included as standard.

L21
Surge suppression

In ungrounded IT systems, the line voltage is not permanently connected to the ground potential because of the missing ground connection of the supply network. Therefore, when a ground fault occurs during operation, a voltage against ground increased by a factor of 2 can occur. For this reason, it is recommended that a surge suppression against ground be installed for operation on IT systems. The surge suppression option includes the installation of line-side surge arresters and upstream fuses for each system phase. The signaling contacts for monitoring the surge arresters are connected in series and connected to a customer interface.

Note:
Option **L21** does not include the components required to install an insulation monitor for the IT system. An insulation monitor should always be ordered separately as option **L87** when the supplying IT system is not monitored at another position (e.g. at the transformer outgoing feeder). Only one insulation monitor can ever be used within the same electrically connected network.
Option **L21** also does not include removal in the factory of the metal bracket that makes the connection to ground of the radio interference suppression filter installed as standard. The metal bracket should therefore be removed during the installation or commissioning of the converter if the device is to be operated on an ungrounded IT system.

© Siemens 2024

Options

L22
Delivery scope without line reactor

The air-cooled Basic Line Modules and Smart Line Modules as well as the liquid-cooled Basic Line Connection Modules are supplied with line reactors as standard; the reason for this is that frequently in practice the line configuration at the connection point of the drive line-up and/or the line supply short-circuit power is not known.

If the supply is connected through a separate transformer or if the line has a suitably low short-circuit power or if the standard integrated line reactor does not need to be supplied for other reasons, then this can be indicated by selecting option **L22**.

In the case of air-cooled Cabinet Modules, option **L22** can be selected for Line Connection Modules (rated current < 2000 A) in conjunction with Basic Line Modules (option **L43**) and for Smart Line Modules. In the case of liquid-cooled Cabinet Modules, option **L22** can be selected for Basic Line Connection Modules.

For Basic Line Modules and Basic Line Connection Modules connected in parallel, a line reactor should always be used, i.e. option **L22** cannot be selected.

The power losses of each line reactor stated in section System components → Line-side components → Line reactors can be deducted from the total power loss for engineering purposes.

For additional information, please refer to the SINAMICS Low Voltage Engineering Manual.

L25
Withdrawable circuit breaker

Line Connection Modules (air-cooled), Active Line Connection Modules and Basic Line Connection Modules (liquid-cooled) with an input current of > 800 A are equipped with fixed-mounted circuit breakers as standard. Where the customer requires a visible isolating distance, a withdrawable circuit breaker can be ordered as an option.

L34
Output-side circuit breaker

Option **L34** can be used to disconnect the motor terminals from the Motor Module Chassis.

A rotating permanent-magnet synchronous motor generates a voltage at its motor terminals proportional to the speed. The motor terminal voltage is also available at the inverter output terminals as well as at the DC link and the components connected to it.

Option **L34** is available for disconnection in the case of a fault or if maintenance work is to be carried out.

Option **L34** is completely prewired and is accommodated in an additional cabinet, which is arranged at the right-hand side of the Motor Module (400 mm wide for frame sizes FX/GX, 600 mm wide for frame sizes HX/JX). It is controlled using a TM31 Terminal Module, which is included with this option. This means that the output switch is automatically controlled via the Motor Module.

Option **L34** cannot be combined with the following options:

- **L07** (dv/dt filter compact plus VPL)
- **L10** (dv/dt filter plus VPL)

L37
DC interface incl. pre-charging circuit of the relevant DC link capacitance

If, for reasons relating to the process or availability, the Motor Module needs to be disconnected from the common DC link for an entire drive line-up or connected to it during operation, a manually operated isolating distance can be ordered as an option. With chassis format power units, this takes the form of switch disconnectors, and with Booksize Cabinet Kits, a contactor combination.

Option **L37** is installed on the busbar between the Motor Module and the main DC busbar. To ensure that the module can be connected to a pre-charged DC link, the option also includes a pre-charging circuit for the DC link capacitors of the relevant Motor Module.

The switching operation is performed externally. The operating levers can be locked using a padlock (padlock not included in scope of supply). The degree of protection of the cabinets is not influenced.

The air guidance contains option **L37** and also option **M60** (additional touch protection).

Options **L61/L62** and **L64/L65** (braking units) cannot be ordered together with option **L37** for space reasons.

L40
Line filter monitoring

With option **L40**, the filter in the Active Interface Module is monitored for effectiveness against harmonic effects on the system. The capacitance of the filter capacitors of the integrated filter is continuously calculated and compared with the installed nominal capacitance by measuring the current and voltage in the Active Interface Module. If the calculated capacity deviates by more than the set tolerance, an alarm is triggered.

L41
Current transformer upstream of main circuit breaker

If additional current transformers are required for measuring or monitoring purposes, these can be ordered for (air-cooled) Line Connection Modules or (liquid-cooled) Active Line Connection Modules and Basic Line Connection Modules with option **L41**. The current transformers are installed upstream of the main circuit breaker in all three infeed phases.

The transformers have an accuracy class of 1.0. The secondary current is maximum 1 A.

The transformer measuring connections are routed to the terminal strip in the Line Connection Module.

Note:
These current transformers are already included in options **P10** and **P11** (measuring instrument for the display of line values).

L42
Line Connection Module for Active Line Modules

Order code **L42** is specified in the order to indicate that the Line Connection Module will be connected to an Active Line Module. The Line Connection Module is then adapted accordingly (pre-charging circuit, connection busbars, etc.).
See also the information for the Line Connection Modules and the overview of options.

© Siemens 2024

Options

L43
Line Connection Module for Basic Line Modules

Order code **L43** is specified in the order to indicate that the Line Connection Module will be connected to a Basic Line Module. The Line Connection Module is then adapted accordingly (line reactors, pre-charging circuit, connection busbars, etc.). See also the information for the Line Connection Modules and the overview of options.

L44
Line Connection Module for Smart Line Modules

Order code **L44** is specified in the order to indicate that the Line Connection Module will be connected to a Smart Line Module. The Line Connection Module is then adapted accordingly (pre-charging circuit, connection busbars, etc.).
See also the assignment table for the Line Connection Modules and the overview of options.

L45
EMERGENCY OFF pushbutton, installed in the cabinet door

The EMERGENCY OFF pushbutton with protective collar is installed in the cabinet door of the Line Connection Module and its contacts are connected to a terminal strip. The contacts are designed as 2 NC contacts wire break-proof. From here, the EMERGENCY OFF pushbutton can be integrated into the plant-side EMERGENCY OFF chain.

L46
Grounding switch upstream of main circuit breaker

The grounding switch is upstream of the circuit breaker in the Line Connection Module and short-circuits the incoming supply system to ground. The grounding switch is manually engaged using a rotary operating mechanism to ensure isolation from the line supply when maintenance is being carried out. Measures must be taken at the plant to ensure that the grounding switch cannot be engaged when voltage is applied.

It is also essential to ensure that the supply system cannot be connected when the grounding switch is engaged.

The signals required for mutual interlocking are available on the terminal strip.

L47
Grounding switch downstream of main circuit breaker

The grounding switch is installed downstream of the circuit breaker in the Line Connection Module and short-circuits the incoming supply system to ground downstream of the main circuit breaker. The grounding switch is manually engaged using a rotary operating mechanism to ensure isolation from the line supply when maintenance work is being carried out on the converter.

In this case, the grounding switch and the main circuit breaker for the Line Connection Module are interlocked with each other, which ensures that the grounding switch cannot be closed when the main circuit breaker is closed.

If the grounding switch is engaged, it is interconnected to ensure that the main circuit breaker cannot be closed.

L50
Cabinet lighting with service socket

With option **L50**, cabinet lighting is included with an additional service socket for a SCHUKO connector (connector type F) according to CEE 7/4. The power supply for the cabinet lighting and the service socket is external and must be fuse-protected for max. 10 A.

The cabinet lighting consists of an LED hand lamp with On/Off switch and with magnetic fasteners with an approx. 3 m long connecting cable. The lamp is factory-positioned in the cabinet door at a defined marking, and the connecting cable is wound on the associated mount.

L55
Cabinet anti-condensation heating

The anti-condensation heating is recommended at low ambient temperatures and high levels of humidity to prevent condensation. Depending on the cabinet width, a 100 W cabinet heater is installed for each Cabinet Module.

1 heating element for cabinet width up to 600 mm, 2 heating elements for cabinet width over 800 mm.

The power supply for the anti-condensation heating (110 V to 230 V AC, at terminal strip -X240) must be provided externally and fused with max. 16 A.

© Siemens 2024

Options

L61, L62, L64, L65
Braking units

Braking units may be required for drives in which motors might operate in generator mode, but have no facility for feeding energy back into the supply system.

The braking unit comprises two components:

- A Braking Module that can be installed in the air discharge of the chassis format power units
- A braking resistor to be mounted externally (degree of protection IP20)

The braking unit functions as an autonomous unit, and does not require an external power supply. During the braking process, the kinetic energy is converted into heat in the externally mounted braking resistor.

A max. cable length of 100 m is permissible between the Braking Module and the braking resistor. This allows the braking resistor to be mounted externally so that heat losses can be dissipated outside the converter enclosure. The braking resistor is directly connected to the Braking Module.

For SINAMICS S120 Cabinet Modules the following braking modules are available, depending on the frame size:

Option	Can be used with frame sizes	**Braking Module**		
		Rated power P_{DB} kW	Braking power P_{20} kW	Peak power P_{15} kW
380 ... 480 V 3 AC, 660 ... 690 V 3 AC				
L61	FX	25	100	125
L62	GX, HX, JX	50	200	250
500 ... 600 V 3 AC				
L64	FX	25	100	125
L65	GX, HX, JX	50	200	250

P_{DB}: Rated power (continuous braking power)

P_{20}: 20 s power referred to a braking interval of 90 s

P_{15}: 15 s power referred to a braking interval of 90 s

If the braking units listed here do not provide adequate braking power, up to four braking units on a DC link busbar may be connected in parallel. Braking power can be shared among several Modules. In this case, a Braking Module is assigned to each braking resistor.

Note:
It is only possible to use a Braking Module, if a DC interface (option **L37**) has not been selected for the Motor Module.

When engineering the system, it should be ensured that the module in which the Braking Module is installed is switched on during braking so that the Braking Module is properly cooled. Failure to follow this instruction means that the Braking Module could overheat and shut down, the drive will no longer be able to operate in braking mode. In this case, the Braking Modules should preferably be located in the Line Modules.

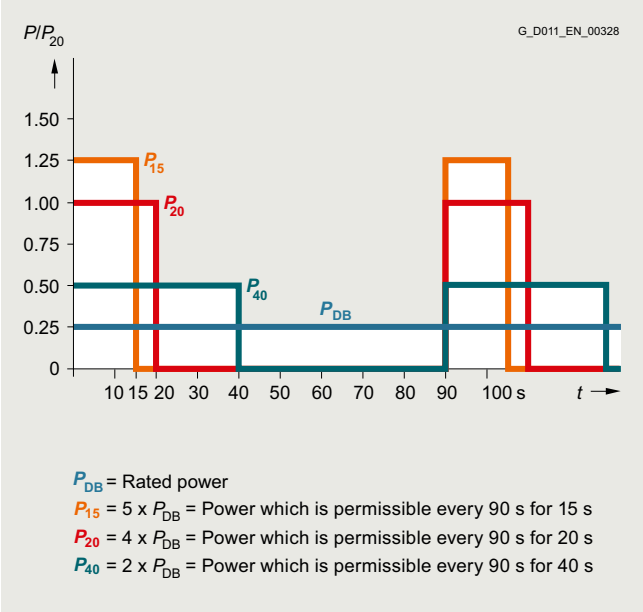

Load diagram for Braking Modules and braking resistors

Additional notes about possible duty cycles of the braking resistors and other engineering notes are included in the SINAMICS Low Voltage Engineering Manual.

L87
Insulation monitoring

An insulation monitor must be used if the converter is connected to an ungrounded line supply. The device monitors the entire galvanically coupled circuit for insulation faults.

An alarm is output in the event of a fault.

The **L87** option includes the factory removal of the metal bracket that connects the standard radio interference suppression filter to the ground. The metal bracket is removed from the respective Line Module and enclosed with the cabinet unit.

Notice:
Only **one** insulation monitor can be used in each galvanically coupled network.

As there are different response strategies when a ground fault occurs in an ungrounded system, output relays of the insulation monitor are provided for integration in a plant-side control. It is also possible to integrate the outputs into the Cabinet Modules monitoring system on the plant side.

M06
Base 100 mm high, RAL 7022

The additional cabinet base allows larger bending radii for cables (cable inlet from below) and enables them to be routed within the cabinet base.

The cabinet base is supplied in RAL 7022 as standard. A special paint finish is not available for the base. It is delivered completely assembled with the cabinet. The height of the operator panel changes accordingly.

Combination with option **M66** is not possible.

© Siemens 2024

Options

M07
Cable marshaling space 200 mm high, RAL 7035

The cable marshaling space is made of strong sheet steel and allows cables to be connected more flexibly (entry from below). It also allows routing of cables within the marshaling space. It is delivered completely assembled with the cabinet. The height of the operator panel changes accordingly.

Notice:
The cable marshaling space is painted as standard with RAL 7035. If a special color is requested for the cabinet (option **Y09**), the cable marshaling space is also painted in this color.

Combination with option **M66** is not possible.

M16
Dust protection packaging

All Cabinet Modules are taped with a protective film. The connection fields are omitted so that a connection of the power cables is possible. 2-language warning labels are attached to the protective film.

Notice:

Recommendation for the order of option M16 for shipbuilding and offshore applications for main and auxiliary drives. In the event of consequential damage caused by installation work on site, Siemens assumes no liability/costs in the event of contamination.

M21
Degree of protection IP21 (for air cooling only)

Cabinet version in IP20, but with additional top cover or canopy. This increases the cabinet height by 250 mm. For transport reasons, the top covers or canopies are delivered separately and must be fitted on site.

Notice:
The top covers or canopies are painted in RAL 7035 as standard. If a special color is requested for the cabinet (option **Y09**), the top covers or canopies are also painted in this color.

Degree of protection IP21 is the standard version for liquid-cooled Cabinet Modules.

M23
Degree of protection IP23

Cabinet Modules with degree of protection IP23 are supplied with additional plastic ventilation grilles and a filter medium in the air inlet and outlet. The filter medium must be maintained according to the local environmental conditions. The covers provided with option **M60** are also included in the scope of supply.

The air-cooled Cabinet Modules are additionally supplied with a roof section. This increases the cabinet height by 400 mm. For transport reasons, the roof sections are delivered separately and must be fitted on site.

Notice:
The roof sections are painted in RAL 7035 as standard. If a special color is requested for the cabinet (option **Y09**), the roof section is also painted in this color. The molded plastic parts (e.g. ventilation grilles) are in RAL 7035 and cannot be painted.

M26
Side panel mounted at the right

For side-by-side installation of Cabinet Modules from left to right, cabinets can be ordered ready-prepared at the factory for assembly on-site. If option **M26** is ordered, the Cabinet Module is shipped with a side panel fitted on the right.

This side panel is essential for ensuring compliance with IP20 and higher degrees of protection.

M27
Side panel mounted to the left

For side-by-side installation of Cabinet Modules from right to left, cabinets can be ordered ready-prepared at the factory for assembly on-site. If option **M27** is ordered, the Cabinet Module is shipped with a side panel fitted on the left.

This side panel is essential for ensuring compliance with IP20 and higher degrees of protection.

M43
Degree of protection IP43

Cabinet Modules with degree of protection IP43 are supplied with additional plastic ventilation grilles and a filter medium in the air inlet and outlet. The filter medium must be maintained according to the local environmental conditions. The covers provided with option **M60** are also included in the scope of supply.

The air-cooled Cabinet Modules are additionally supplied with a roof section. This increases the cabinet height by 400 mm. For transport reasons, the roof sections are delivered separately and must be fitted on site.

Notice:
The roof sections are painted in RAL 7035 as standard. If a special color is requested for the cabinet (option **Y09**), the roof section is also painted in this color. The molded plastic parts (e.g. ventilation grilles) are in RAL 7035 and cannot be painted.

M45
Cable entry via MCT frame

The base plates included as standard for the line and motor connection are omitted. Instead, a galvanized MCT-Brattberg frame type RGSFB 8x1, cut-out 120 x 280 mm, is installed without inserts.
Depending on the number of cables, cable cross-section and required seal, the corresponding inserts must be procured on the system side.
Cabinet installation, if necessary in combination with a basic frame (100 mm), have to be carried out with the order engineering.
The option M45 can only be ordered with option M66, M06 or M07.

For more information, see: www.mctbrattberg.com/products/

M51
Motor connection wired to customer terminal

Option **M51** can only be selected in combination with option **M77** (version without component support plates or additional control components).

With option **M51**, the connection of the motor cable is wired to a customer terminal -X1 and thus makes the process of connecting motor cables easier.

Without option **M51**, the motor cable is connected directly to the Motor Module. In systems with one motor reactor or two series-connected motor reactors (option **L08/L09**), the motor cables are connected directly to the motor reactor.

© Siemens 2024

Options

M54
Degree of protection IP54 (for air cooling only)

Cabinet Modules with degree of protection IP54 are supplied with additional roof sections, plastic ventilation grilles, and a filter medium in the air inlet and outlet, which ensures compliance with degree of protection IP54. This increases the cabinet height by 400 mm. For transport reasons, the roof sections are delivered separately and must be fitted on site.

The filters must be maintained according to the local environmental conditions.

Notice:

- The roof sections are painted in RAL 7035 as standard. If a special color is requested for the cabinet (option **Y09**), the roof section is also painted in this color. The molded plastic parts (e.g. ventilation grilles) are in RAL 7035 and cannot be painted.
- For units with degree of protection IP54, it is important to observe the derating factor for output currents in relation to ambient temperature and installation altitude.

Degree of protection IP54 (for liquid cooling only)

Cabinet Modules with degree of protection IP54 are supplied with additional plastic ventilation grilles and a filter medium in the air inlet and outlet. The filter medium must be maintained according to the local environmental conditions.

M55
Degree of protection IP55 (for liquid cooling only)

Cabinet Modules with degree of protection IP55 are supplied with closed doors and roof sheets (without additional roof section). Water jets from any angle are permitted. Because the cabinets are completely enclosed and there is no exchange of air with the environment, it is not necessary to clean a filter medium.

The derating data are provided in the derating characteristics for the liquid-cooled Cabinet Modules.

Almost all heat losses are dissipated into the cooling liquid.

M56
Reinforced mechanical design

This option includes a strengthened mechanical version of the cabinet and mechanical locking of the cabinet doors. To secure the converter to the floor, a welding frame (5 mm high) is supplied separately. This option is available for all degrees of protection.

M59
Closed cabinet doors, air inlet from below through floor opening

If the Cabinet Modules are erected on a false floor or duct which forms part of a forced ventilation system, the modules can be ordered with closed cabinet doors. To ensure an adequate air inlet cross-section, the units are shipped without the standard base plates. In this case, the customer must ensure that no dirt/dust or moisture can enter the Cabinet Module. Cables must not be routed in such a way that they impede the flow of air through the cabinet floor opening. If the area beneath the Cabinet Modules can be accessed, the customer must provide touch protection.

M60
Additional touch protection

The Cabinet Modules are designed in accordance with DGUV regulation 3 as standard. With option **M60**, additional covers (out of reach) at accessible operator control and switching elements are provided in the area of the AC and DC busbars and in front of the power unit.

Option **M60** is already included in **M23**, **M43**, and **M54** for the following Cabinet Modules.

- Line Connection Modules
- Basic Line Modules
- Smart Line Modules
- Active Line Modules with Active Interface Modules
- Motor Modules chassis
- Central Braking Modules
- Auxiliary Supply Modules

Liquid-cooled Cabinet Modules incorporate additional touch protection as a standard feature – it does not have to be ordered with option **M60**.

M61
Comfort-grip handle with a 3 mm double-bit lock insert

Instead of a standard lock with double-bit lock, a comfort-grip handle with a 3 mm double-bit lock insert is installed in the cabinet door of the respective Cabinet Module. A cabinet key with a 3 mm double-bit is required to open the door.
Because the folding method of the comfort-grip handle does not require any swivel range, the door surface can be used optimally for additional fixtures.

M62
Comfort-grip handle with integrated pushbutton lock insert

Instead of a standard lock with double-bit lock, a comfort-grip handle with a pushbutton lock insert is installed in the cabinet door of the respective Cabinet Module. No cabinet key is required to open the door. Access protection to the control cabinet must be taken care of on the plant/system side.
Because the folding method of the comfort-grip handle does not require any swivel range, the door surface can be used optimally for additional fixtures.

M63
Comfort-grip handle for a padlock with pushbutton as lock insert

Instead of a standard lock with double-bit lock, a comfort-grip handle with a shackle for a padlock and a pushbutton as a lock insert are installed in the cabinet door of the respective Cabinet Module. The door can therefore be locked using an external lock with a U-shaped shackle of max. 8.5 mm.
Because the folding method of the comfort-grip handle does not require any swivel range, the door surface can be used optimally for additional fixtures.

M66
Marine version

For compliance with the requirements of the classification institutes:

- Det Norske Veritas (DNV)
- American Bureau of Shipping (ABS)
- China Classification Society (CCS)

This option includes a strengthened mechanical version of the cabinet, handles (handrail) below the operator panel and mechanical locking of the cabinet doors. The cabinet has degree of protection IP23 (option **M23**) and includes a cabinet anti-condensation heater (option **L55**). To secure the converter to the ship's hull, a basic/welding frame in the cabinet color RAL7035 (100 mm high) is supplied.

Note:

Combination with options **M06**, **M07**, **M21**, **M23** and **L55** is not possible. Individual certification is additionally required if the converter is used for a safety-related drive on the ship (see options E51 to E71).

Other classification institutes on request.

© Siemens 2024

Options

M70
EMC shield bus

The EMC shield bus is used to connect shielded line and motor supply cables. The shields can be applied over a large surface area with the supplied EMC shield clips.

The EMC shield bus is on the line-side already included as standard with option **L00** (RFI suppression filter).

The Active Line Connection Modules compact contain DC link fuses as standard.

M72
Quick-release couplings for water hoses (for liquid cooling only)

With option **M72**, the ports for connecting the water hoses to the power modules and heat exchangers are fitted with quick-release couplings. The quick-release couplings ensure that no liquid escapes during uncoupling.

The use of quick-release couplings makes disassembly of the power units and heat exchangers considerably easier.

M77
Version without component support plates and without additional control components

If electronic components (Control Unit, Terminal Modules, Sensor Modules) are not used in the Booksize Cabinet Kit, the mechanical component support plates are omitted with option **M77**, including the customer terminal blocks for connecting motor cables.

The motor cables are then connected directly to the Motor Module in booksize format.

When option **L08**/**L09** is used (motor reactor / 2 motor reactors in series), the motor cables are connected directly to the motor reactor.

The table below provides an overview of possible motor cable connection cross-sections for motor cables connected directly to a Motor Module in booksize format:

Booksize Cabinet Kit 6SL3720-...	Rated output current of Motor Module A	Conductor cross-section mm^2
1TE21-0AB3	9	1.5 ... 6
1TE21-8AB3	18	1.5 ... 6
1TE23-0AB3	30	1.5 ... 6
1TE24-5AB3	45	6 ... 50
1TE26-0AB3	60	6 ... 50
1TE28-5AB3	85	16 ... 120
1TE31-3AB3	132	25 ... 120

Note:

When combined with option **M51**, the motor connection is wired to a customer terminal.

M80 to M87
DC busbar system

The correct DC busbar for the Cabinet Module must be ordered. This is fitted in the upper section of the Cabinet Modules and connects the Line Modules to the Motor Modules.

The busbar is dimensioned according to the load requirements and demand factor associated with operation of the individual drives, and according to the specific Cabinet Module layout. For this reason, the DC busbar is not supplied as standard, but must be ordered as an option.

When selecting busbars, it is important to ensure that the systems of adjacent Cabinet Modules are compatible with one another (refer to the table below and option selection matrix for the Cabinet Modules in question).

Where Cabinet Modules are ordered as a factory-assembled transport unit with option **Y11**, all busbars in the transport unit must be identical.

Order code	DC busbar system, rated current I_N A	Number	Dimensions mm (in)	Compatible with
M80	1170	1	60 × 10 (2.36 × 0.39)	**M83**
M81	1500	1	80 × 10 (3.15 × 0.39)	**M84** and **M86**
M82	1840	1	100 × 10 (3.94 × 0.39)	**M85** and **M87**
M83	2150	2	60 × 10 (2.36 × 0.39)	**M80**
M84	2730	2	80 × 10 (3.15 x 0.39)	**M81** and **M86**
M85	3320	2	100 × 10 (3.94 × 0.39)	**M82** and **M87**
M86	3720	3	80 × 10 (3.15 x 0.39)	**M81** and **M84**
M87	4480	3	100 × 10 (3.94 × 0.39)	**M82** and **M85**

The DC busbars are nickel-plated as standard and are available in different designs for a variety of current-carrying capacities. The scope of supply also includes the jumpers required to link the busbar systems of individual Cabinet Modules.

M88
DC busbar system for line-side Cabinet Modules (only for liquid cooling) and Cabinet Modules-2

Option **M88** is required if Motor Modules are to be installed to the left or if up to four Basic Line Connection Modules or Active Line Connection Modules are to be connected for a parallel connection.

For this purpose, DC busbars are built into the upper part on the left hand side in the line-side Cabinet Module of each Active Line Connection Module and Basic Line Connection Module.

The busbars are nickel plated as standard and are selected for different current carrying capacities as for the selected options **M80 to M87**.

M90
Crane transport assembly (top-mounted)

A top-mounted crane transport assembly can be ordered as an option for Cabinet Modules.

Depending on the width of the module, it consists of either transport eyebolts (width ≤800 mm) or transport rails (width >800 mm).

When Cabinet Modules are ordered as factory-assembled transport units (option **Y11**), they are shipped with transport rails, i.e. option **M90** is automatically included in the scope of supply of option **Y11** and does not need to be ordered separately.

M91
Marking of all control cable conductor ends (incl. customer-specific wiring)

When this option is selected, all control cables or conductor ends (including all customer-specific options) are labeled throughout the cabinet.

© Siemens 2024

Options

N52
DC link fuses

The Basic Line Modules (air-cooled), Active Line Connection Modules and Basic Line Connection Modules (liquid-cooled) come without DC link fuses as standard.
If fuses are required, they can be ordered with option **N52**.
The fuses are mounted on the connecting rail to the DC busbar in the cabinet rather than in the power unit.
The use of DC link fuses is recommended when Basic Line Modules, Active Line Connection Modules, and Basic Line Connection Modules are connected in parallel.
The Motor Modules and Motor Modules compact contain DC link fuses as standard.

P10
Measuring instrument for line values, mounted in the cabinet door

A DIRIS A-30 measuring instrument with graphic display, installed in the cabinet door of the Line Connection Module, for acquiring measured values of the power supply. The measuring instrument has a serial RS485 interface with JBUS/MODBUS®, which allows a maximum data transfer rate of 38.4 kBaud.
Current transformers (option **L41**) are already included in the scope of supply.

P11
Measuring instrument for line values with PROFIBUS connection, mounted in the cabinet door

A SENTRON PAC3220 measuring instrument with graphic display, installed in the cabinet door of the Line Connection Module, for acquiring measured values of the power supply. With integrated digital input and output as well as an integrated Ethernet interface for transmitting measured values and for configuration. Display of more than 50 electrical measured values. Dual-tariff energy measuring instrument for precise energy acquisition for consumption and recovery.
The measuring instrument has a PROFIBUS interface that permits a data transfer rate of up to 12 Mbps.
Current transformers (option **L41**) are already included in the scope of supply.

T58, T60, T80, T83, T85, T91
Rating plate data

The rating plate is provided in English/German as standard.
A rating plate in another language combination can be selected by specifying the following option order codes.

Option	Rating plate language
T58	English/French
T60	English/Spanish
T80	English/Italian
T83	English/Portuguese (Brazil)
T85	English/Russian
T91	English/Chinese

W01
Heat Exchanger Module, partially redundant with 2 pumps

The Heat Exchanger Module is equipped with a pump and a plate-type heat exchanger as standard. With option **W01**, two redundant pumps with two dirt traps and non-return valves are fitted. The pumps, which operate alternately, pump the hot coolant of the deionized water circuit on the converter side into the plate-type heat exchanger and there it is cooled by the raw water of the plant-side circuit.

System reliability is increased as a result of the alternating operation of the redundant pumps. The time in hours can be parameterized. In addition, the dirt traps can be cleaned independently and during operation, as shutoff valves are installed before and after the individual pumps.

Note:
Option **W01** increases the cabinet width by 400 mm and its weight by 110 kg.

W10
Pipe insulation in the raw water circuit and of the heat exchanger

With this option, the pipes in the raw water circuit and of the heat exchanger are insulated. This means that if the raw water on the plant side is too cold, condensation does not occur on the pipes and liquid does not collect in the Heat Exchanger Module.

W20
Raw water connection from the bottom

The raw water from the supply is fed into the Heat Exchanger Module from above as standard. With option **W20**, the line-side raw water connection in the Heat Exchanger Module is at the bottom.
The piping system is made of W 1.4404
(V4A, AISI 316) stainless steel.

W25
Raw water connection from the side

The raw water from the supply is fed into the Heat Exchanger Module from above as standard. With option **W25**, the raw water connection in the Heat Exchanger Module is made from the side.
The version of option **W25** depends on the ordered option **W34** or **W36**.
The piping system is made of W 1.4404
(V4A, AISI 316) stainless steel.

W34
Heat Exchanger Module for installation on left

With this option, a fixed pipe connection is routed downward on the right-hand side. The option is required to install the Heat Exchanger Module at the left end of the drive line-up and to be able to connect it to the deionized water circuit on the converter side. The connecting parts are on hand.

W36
Heat Exchanger Module for installation on the right

With this option, a fixed pipe connection is routed downward on the left-hand side. The option is required to install the Heat Exchanger Module at the right end of the drive line-up and to be able to connect it to the deionized water circuit on the converter side. The connecting parts are on hand.

W43
Release valve in the deionized water circuit

A release valve is installed between the intake and return in the converter-side deionized water circuit. The valve limits the discharge pressure of the circulating pumps. As soon as the discharge pressure exceeds the value set at the valve, the valve opens the bypass.

© Siemens 2024

Options

W48
Leakage sensor in the converter cabinet, at the bottom in the cabinet floor

With this option, a leakage sensor is installed at the cabinet floor of the respective converter cabinet for which the option is ordered. A common evaluation module is installed in the Basic Line Connection Module, Active Line Connection Module or Active Line Connection Module compact. The wiring to the TM31 Terminal Module in the Heat Exchanger Module must be done on the plant side. If you order the option W48, please also verify the need of option W49 "Leakage sensor in the Heat Exchanger Module".

Recommendation:
Order of option W48/W49 for shipbuilding and offshore applications with individual certification DNV, option E51.

W49
Leakage sensor in the Heat Exchanger Module, at the bottom in the cabinet floor

With this option, a leakage sensor is installed at the cabinet floor of the Heat Exchanger Module. The installed evaluation module is connected to a digital input of the TM31 Terminal Module. When a leak is detected, a corresponding alarm or fault (can be parameterized) is output.

Recommendation:
Order of option W48/W49 for shipbuilding and offshore applications with individual certification DNV, option E51.

W62
Sensors in the raw water circuit on the plant/system side

With this option, a flow monitor and a Pt1000 temperature sensor are installed in the intake of the plant-side raw water circuit. The signals are transferred to the TM31 or TM150 Terminal Module. This meansthat the flow and temperature can be monitored.

The temperature alarm limit can be parameterized in the Control Unit. The flow signal is parameterized at the sensor, and is evaluated by the TM31 Terminal Module.

Y09
Special cabinet paint finish

The Cabinet Modules are delivered in RAL 7035 as standard. The special paint finish must be specified in plain text when ordering. Any RAL colors that are available as powdered coatings can be selected. Other special colors on request.

Notice:
If options such as cable marshaling space (option **M07**), top covers or canopies (option **M21**) or roof sections (options **M23**/**M43**/**M54**) are ordered for the Cabinet Modules, they will also be supplied in the paint finish specified for the cabinet in the order. The molded plastic parts (e.g. ventilation grilles) are in RAL 7035 and cannot be painted.

Y11
Factory assembly into transport units

With this option, Cabinet Modules can be ordered as factory-assembled transport units with a maximum total width of up to 2400 mm. In this case, the relevant modules are shipped as interconnected units (both electrically and mechanically).

When DC busbars (options **M80** to **M87**) are selected, it must be ensured that identical busbars are installed within the transport unit and are compatible with all adjacent Cabinet Modules.

In the case of a transport unit order, all the Cabinet Modules to be included in the unit and their installation sequence from left to right must be specified in plain text according to the syntax below:

Plain text required to order	TU	1	-	1 ... 6
• Transport unit (TU)				
• Serial number of transport unit				
• Position of Cabinet Module within transport unit from left to right				

In the case of air-cooled Cabinet Modules, option **Y11** is recommended when creating units comprising Line Connection Modules with Line Modules because the required pre-charging circuits and connection busbars, for example, can be incorporated for certain versions. Please refer to the assignment tables for the Line Connection Modules.

With liquid-cooled Cabinet Modules, option **Y11** is especially recommended to reduce the number of connection elements used in the cooling circuit on the converter side. It results in lower resistance to flow and avoids leaks. Option Y11 is not permitted in connection with Heat Exchanger Modules.

The transport unit is shipped with a crane transport rail, which means that option **M90** is not required.

Y31
One-line label for system identification, 40 × 80 mm

Resopal labeling plates (white with black lettering) for identifying Cabinet Modules are available. The labels are stuck to the cabinet door.

Dimensions H × W: 40 × 80 mm

The text must be specified in plain text when ordering.

Field 1: Max. 9 characters, font size 10 mm

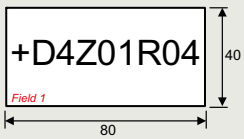

© Siemens 2024

Options

Y32
Two-line label for system identification, 40 × 180 mm

Resopal labeling plates (white with black lettering) for identifying Cabinet Modules are available. The labels are stuck to the cabinet door.

Dimensions H × W: 40 × 180 mm

The text must be specified in plain text when ordering.

Field 1: Max. 9 characters, font size 10 mm
Field 2: Max. 9 characters, font size 10 mm
Field 3: Max. 20 characters, font size 10 mm

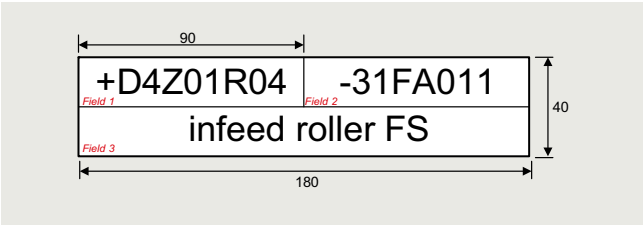

Y33
Four-line label for system identification, 40 × 180 mm

Resopal labeling plates (white with black lettering) for identifying Cabinet Modules are available. The labels are stuck to the cabinet door.

Dimensions H × W: 40 × 180 mm

The text must be specified in plain text when ordering.

Field 1: Max. 9 characters, font size 10 mm
Field 2: Max. 20 characters, font size 6 mm
Field 3: Max. 20 characters, font size 6 mm
Field 4: Max. 20 characters, font size 6 mm
Field 5: Max. 20 characters, font size 6 mm

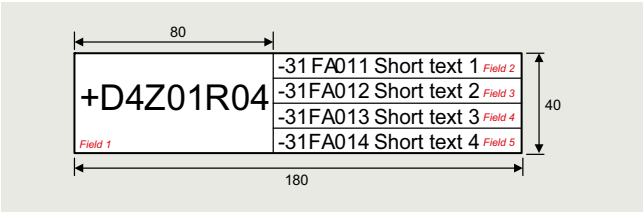

© Siemens 2024

Mounting device for air-cooled power blocks

Overview

Power block mounting device for installing and removing the power blocks for the Basic Line Modules, Smart Line Modules, Active Line Modules and Motor Modules in chassis format.

The mounting device is a mounting aid. It is placed in front of the module and attached to the module. The telescopic rails allow the device to be adjusted to the installation height of the power blocks.

Once the mechanical and electrical connections have been released, the power block can be removed from the module.

The power block is guided and supported by the guide rails on the handling device.

Selection and ordering data

Description	Article No.
Mounting device for installing and removing power blocks	**6SL3766-1FA00-0AA0**

Mounting device for liquid-cooled power units

Overview

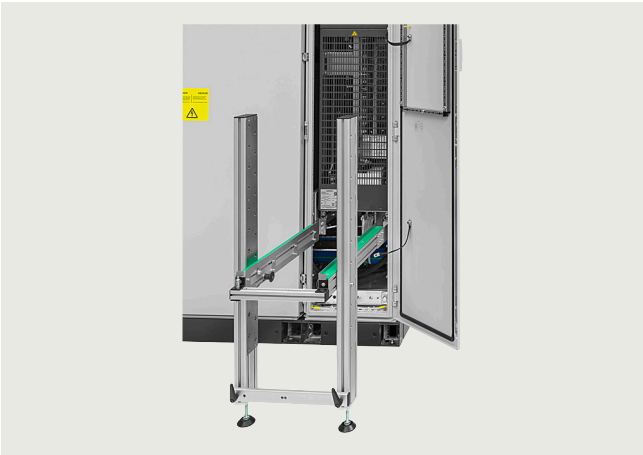

The mounting device is used to install or remove liquid-cooled power units (Line Modules, Motor Modules) into or out of a control cabinet. The mounting device can be used if the power units are mounted on mounting rails, which at the front have two M6 threads at a vertical distance of 20 mm to attach the mounting device.

The mounting device is a mounting aid. It is placed in front of the power unit and attached to the mounting rails below the power unit. The telescopic rails allow the mounting device to be adjusted to the installation height and width of the power unit. The power unit can be removed from the control cabinet after releasing the mechanical and electrical connections and the coolant connections. The power unit is guided and supported by the guide rails on the mounting device. To prevent it toppling over, the power unit must be secured to a crane, tripod, or similar assembly using the lifting lugs or the lifting equipment. The unit can then be lowered down from the mounting device.

Selection and ordering data

Description	Article No.
Mounting device for installing and removing power units	**6SL3766-1CA00-0AA0**

© Siemens 2024

Overview

Just like the SINAMICS S120 buit-in units, SINAMICS S120 Cabinet Modules and Cabinet Modules-2 form a modular drive system that consists of various intelligent Drive Objects such as Line Modules, Motor Modules, Control Units, Sensor Modules, etc.

As a consequence, SINAMICS S120 Cabinet Modules and Cabinet Modules-2 are supplied with documentation that only includes and describes the individual Cabinet Modules (circuit diagram, layout diagram, terminal diagram and additional Operating Instructions).

By selecting option **Y11**, individual Cabinet Modules are assembled at the factory as interconnected units for transport and are then supplied as such.

Detailed documentation showing features such as the signal connections between the individual Cabinet Modules that make up the order, is not included in the normal scope of supply.

In this case, only a collection of the individual documents are shipped with the converter.

If the documentation is to include a complete representation of the equipment supplied, the equipment and documentation must be additionally processed. This can be ordered with the integration engineering.

Integration engineering includes the following:

- Checking the combinations and options ordered, in relation to the device configurations
- Defining how the individual drive objects are to be connected and coordinated, with the customer if required.
- Checking the performance of the ordered CompactFlash card
- Installing the required DRIVE-CLiQ cables within the transport units.
  Cables between the transport units are connected at one end
- Higher-level documentation of the scope of supply (layout diagram, circuit diagram, terminal diagram, dimension drawing, spare parts list).
- Summary of the individual documents included in a shipment, in conjunction with a delivery address separate from the equipment
- Customer-specific system and location designations, coordinated with the customer

Note:
The order-specific integration engineering is especially recommended for liquid-cooled Cabinet Modules.

If the converter is used for a safety-related drive on the ship, an individual certification is additionally required (see options **D51** to **D71**), which must also be ordered with the respective Cabinet Module.

Selection and ordering data

The following engineering services can be ordered depending on the number of drives/axes included in an order:

Integration engineering	Article No.
For 1 drive (also parallel connection) including the associated Line Modules, Sensor Modules, Terminal Modules, etc.	**6SL3780-0AA00-0AA0**
For up to 3 drives (also parallel connection) including the associated Line Modules, Sensor Modules, Terminal Modules, etc.	**6SL3780-0AC00-0AA0**
For up to 5 drives (also parallel connection) including the associated Line Modules, Sensor Modules, Terminal Modules, etc.	**6SL3780-0AE00-0AA0**
For up to 10 drives (also parallel connection) including the associated Line Modules, Sensor Modules, Terminal Modules, etc.	**6SL3780-0AJ00-0AA0**

Engineering services for larger drive systems are also available on request.

© Siemens 2024

Options

The table below lists the options available for order-specific integration engineering
(for details, see Description of the options):

Available options	Order code
Customer documentation (circuit diagram, layout diagram, dimension drawing, spare parts list) in EPLAN format.	D01
Customer documentation (circuit diagram, terminal diagram, layout diagram) in DXF format	D02
Preliminary version of customer documentation in PDF format	D14
Documentation as language package	
Documentation in English/French	D58
Documentation in English/Spanish	D60
Documentation in English/German (standard, if no documentation option is ordered)	D74
Documentation in English/Italian	D80
Documentation in English/Chinese	D91
Documentation in English/Portuguese (Brazil)	D93
Documentation in English/Russian	D94
Documentation in a single language	
Documentation in German	D00
Documentation in Russian	D56
Documentation in Italian	D72
Documentation in French	D77
Documentation in Spanish	D78
Documentation in Chinese	D84
Individual certification	
Individual certificate from DNV	E51
Individual certificate from American Bureau of Shipping (ABS)	E61
Individual certificate from China Classification Society (CCS)	E71

When ordering the order-specific integration engineering, the required documentation options must always be ordered together with the order engineering (not with the individual Cabinet Modules).

Ordering the documentation options for the particular Cabinet Modules is only required if equipment is ordered without integration engineering.

In addition, the respective option for individual certification must be ordered with the article number of the corresponding S120 Cabinet Module for capacity planning.

Option selection matrix of the order-specific integration engineering

Certain options are mutually exclusive.

✓	Possible combination
–	Combination not possible

	D00	D01	D02	D14	D56	D58	D60	D72	D77	D78	D80	D84	D91	D93	D94
D00		✓	✓	✓	✓	✓	✓	✓	✓	✓	✓	✓	✓	✓	✓
D01	✓		✓	–	✓	✓	✓	✓	✓	✓	✓	✓	✓	✓	✓
D02	✓	✓		✓	✓	✓	✓	✓	✓	✓	✓	✓	✓	✓	✓
D14	✓	–	✓		✓	✓	✓	✓	✓	✓	✓	✓	✓	✓	✓
D56	✓	✓	✓	✓		✓	✓	✓	✓	✓	✓	✓	✓	✓	–
D58	✓	✓	✓	✓	✓		–	–	–	–	–	✓	–	–	–
D60	✓	✓	✓	✓	✓	–		✓	✓	–	–	✓	–	–	–
D72	✓	✓	✓	✓	✓	–	✓		✓	✓	–	✓	✓	✓	✓
D77	✓	✓	✓	✓	✓	–	✓	✓		✓	✓	✓	✓	✓	✓
D78	✓	✓	✓	✓	✓	–	–	✓	✓		✓	✓	✓	✓	✓
D80	✓	✓	✓	✓	✓	–	–	–	✓	✓		✓	–	–	–
D84	✓	✓	✓	✓	✓	✓	✓	✓	✓	✓	✓		–	✓	✓
D91	✓	✓	✓	✓	✓	–	–	✓	✓	✓	–	–		–	–
D93	✓	✓	✓	✓	✓	–	–	✓	✓	✓	–	✓	–		–
D94	✓	✓	✓	✓	–	–	–	✓	✓	✓	–	✓	–	–	

© Siemens 2024

More information

Customized solutions

In addition to the wide range of possibilities of configuring drives with the available modules and options to address specific plant and system requirements, for special applications we also offer customized applications to fully comply with the actual requirements.

These are based on the standard SINAMICS S120 Cabinet Modules and are supplied as completely wired units that are ready to be connected up.

Examples of applications such as these include:

- **SINAMICS S120 liquid-cooled Cabinet Modules for marine applications**
  The range of requirements that drive systems have to meet aboard a ship is enormous – and highly varied. In addition to maximum efficiency and reliability, compactness is absolutely essential given the confined spaces. The systems used must also be low-maintenance, service-friendly, and in every way suitable for marine applications. Siemens provides the answer to these requirements - with the liquid-cooled SINAMICS S120 Cabinet Modules with compact extension. There are the variants Active Line Connection Modules compact and Motor Modules compact as well as additional options for marine applications.
  The innovative liquid-cooled drive system for all marine applications is based on the SINAMICS platform, which is a proven success worldwide. Its footprint has been optimized for use on board and it impresses with its flexibility and economic efficiency.
- **SINAMICS S120 Switch-Over Modules**
  In order to operate different motors at different times on a common converter, SINAMICS S120 Switch-Over Modules are the ideal solution.
  A Switch-Over Module switches the output of the Motor Module over to the motor that is required.
  If, for example, processes powered by specific motors run subsequently at different times, or if the individual motor is only briefly used during the day, then costs and space can be saved by using just one converter, supplemented with the corresponding Switch-Over Module.
  Such applications include, for instance, pump drives on tankers when various ship compartments have to be emptied one after the other, or container cranes, if in addition to the drive for loading and unloading, the drive for operating the boom also has to be fed from the converter.
- **SINAMICS S120 Motor Multi-Connection Modules**
  For applications performed in combination with group drives that require a different number of multi-motor outputs, SINAMICS S120 Motor Multi-Connection Modules are a sensible choice.
  Motor Modules are supplemented with a corresponding control system, as well as switching and protection devices. This configuration allows the associated motors with small power ratings (motor groups) to be operated from a common inverter with a high power rating.
  The completely prewired, ready-to-connect cabinet units facilitate and shorten the commissioning procedure.
  The transparent and flexible design allows changes and additions to be made at any time at low associated costs.

Simply contact us if you are interested or require these or any other applications.

Notes regarding the addresses of contact persons are provided in the chapter "Services and Documentation" under "Partners at Siemens".

Cement mill

Ship docked in port

Oil rig

© Siemens 2024

© Siemens 2024

SINAMICS S120 Cabinet Modules-2

7

7/2 System overview
7/2 Overview
7/2 Benefits
7/3 Application
7/3 Design
7/4 Function
7/6 Technical specifications

7/7 Air-cooled units
7/12 Active Line Connection Modules-2
7/17 Motor Modules in chassis-2 format

7/21 Options

7/23 Order-specific integration engineering
7/24 Option selection

7/25 Customized solutions

© Siemens 2024

Overview

SINAMICS S120 Cabinet Modules-2 are the components of a modular cabinet system for multi-motor drives with a central supply infeed and a common DC link busbar, as used, for example, in the process industry, automotive industry, metal processing industry as well as in the crane and mining sectors. They are available in air-cooled version. As standard, they are installed side by side in a row.

SINAMICS S120 Cabinet Modules-2 include the chassis units from the SINAMICS S120 series in chassis-2 format.

All drive components, from the supply infeed to the motor-side inverters, are configured in a clear, compact layout in the individual Cabinet Modules-2. They can be flexibly combined – also with SINAMICS S120 Cabinet Modules – and optimally adapted to customer-specific requirements thanks to a comprehensive array of options.

The main components of the air-cooled system are as follows:

- Active Line Connection Modules-2 as a combination of Line Connection Module and Active Line Module with an Active Interface Module
- Motor Modules

Standardized interfaces for both the power and the control connections facilitate configuration and installation. Communication between the power units and the central Control Unit takes place via DRIVE-CLiQ, the internal drive serial interface.

Highlights of the Cabinet Modules-2

- Compact, innovative mechanical design of the Motor Module for easier installation and removal, and with reduced footprint
- Rated pulse frequency 2.5 kHz
- Optimized derating
- Innovative cooling concept
- Condition monitoring
- Very easy replacement of the device fan without removing the Motor Module from the control cabinet

The following table provides an overview of the voltage ranges and power ratings of the air-cooled SINAMICS S120 Cabinet Modules-2 that are available.

Voltage ranges and power ratings for air-cooled SINAMICS S120 Cabinet Modules-2

	Line voltage	Input current	DC link voltage	DC link current	Output current	Power range of single modules
Active Line Connection Modules-2 [1]	380 ... 480 V 3 AC	560 ... 1405 A	570 ... 720 V	630 ... 1575 A	–	355 ... 900 kW
Motor Modules [1]	380 ... 480 V 3 AC	–	510 ... 720 V	785 ... 1795 A	655 ... 1495 A	315 ... 800 kW

Benefits

The outstanding system features of the SINAMICS S120 Cabinet Modules-2 provide the following advantages:

- Process optimization with minimum outlay
  - A standard PROFIBUS or PROFINET interface and various analog and digital interfaces enable easy integration into automation solutions
  - Vector and servo control ensures that they fulfill the most exacting requirements regarding the accuracy and dynamic response of drives.
- High level of reliability and availability
  - Individual modules and power components can be replaced quickly and easily, which ensures a higher level of plant availability
- Energy saving during operation
  - The motor-side inverters are coupled via the common DC link and allow energy to be exchanged between motors that are motoring and generating. This means that energy is saved, there is less load on the supply infeed and line harmonics are reduced
  - Generally the line infeed is only dimensioned for the maximum energy required when motoring or the maximum current required when motoring – and not for the sum of the energy requirements of the Motor Modules connected to the DC link. As a consequence, for example, for conveyor belts or motor test stands with Motor Modules that are simultaneously operated in motoring and generating modes, a significantly smaller line infeed unit can be selected.
- Minimal operative, maintenance, and servicing costs
  - Simple commissioning thanks to the menu-driven commissioning tools SINAMICS Startdrive or STARTER.
  - Optional, menu-navigated AOP30 advanced operator panel with plain text display and bar-type display of process variables.
  - All modules are easily accessible, making them extremely service-friendly
- Space-saving design
- Environmentally-friendly operation
  - The converters are exceptionally quiet and compact thanks to state-of-the-art IGBT power semiconductors and an innovative cooling concept

[1] The power can be increased by connecting up to six identical modules in parallel.

© Siemens 2024

Application

SINAMICS S120 Cabinet Modules-2 have been specially developed to allow simple configuration of multi-motor systems. They are used for applications where several motors must be coordinated to realize a drive task as multi-motor drives in a drive line-up. Examples of such applications include:

- Packaging machines
- Plastics processing machines
- Textile machines
- Presses and punches
- Rolling mill drives
- Hoists and cranes
- Printing and paper machines
- Vehicle and gearbox test stands
- Test stand applications
- Machines used in the woodworking, glass and ceramics industries
- Handling and assembly systems
- Machine tools

High-power single drives (parallel connection) can also be implemented with Cabinet Modules-2.

Design

They have been designed according to the zone concept principle and therefore offer the highest possible level of operational reliability. EMC measures have been rigorously implemented. With the help of simulated conditions, partitions have been designed to act as air guides and heat dissipation units.

Special measures used in the construction of the cabinets ensure that they remain mechanically durable over their entire life cycle.

Attention has been paid to providing a wide range of cable routing options and special design concepts are applied consistently to broaden the scope of application and simplify service. The units have all the necessary connections and connecting elements. Thanks to their carefully considered configuration concept, cabinets are shipped in a ready-to-connect state or, in the case of multiple transport units, have been prepared for quick assembly. An extensive spectrum of options designed to adapt the units to a variety of different applications facilitates the selection process.

All components, from individual parts to the ready-to-connect cabinet, undergo rigorous testing throughout the entire production process. This guarantees a high level of functional reliability during installation and commissioning, as well as in operation.

Replaceable components have been designed so that they can be quickly and easily replaced. In addition, the "Spares On Web" internet tool makes it easy to view the spare parts that are available for the particular order at all times [1].

System design

Active Line Connection Modules are coupled with the Motor Modules by means of prefabricated busbar sets with different current carrying capacities.

All standard busbars, as well as electronics components, are protected against environmental influences. This is achieved through the use of nickel-plated copper bars and painted modules throughout.

Auxiliary power supply system

A special, standard auxiliary power supply system supplies the individual Cabinet Modules-2 with the required auxiliary voltages for the power components, fans and 24 V loads.

These voltages are preferably generated using an Auxiliary Power Supply Module. Additional supply possibilities are available using the **K76** option (auxiliary power supply generation in the Line Connection Module) or using an external supply in the auxiliary power supply system.

The auxiliary power supply system comprises an auxiliary power supply module with two terminal blocks and a 24 V DC fuse as well as the required connecting cables. It is supplied completely assembled and ready to operate. Only the cable connections to the adjacent Cabinet Module-2 must be established on-site.

DRIVE-CLiQ communication

Communication between the Control Unit, power units and other active SINAMICS components is realized via DRIVE-CLiQ connections.

DRIVE-CLiQ is an internal serial interface of the drive that enables fast and easy configuration of the complete drive line-up with prefabricated cables in varying lengths.

Transport units

The Cabinet Modules-2 can be optionally supplied in pre-configured transport units up to a total length of 2400 mm.

Coated modules

The following devices are equipped as standard with coated modules:

- Devices in chassis-2 format
- Control Units
- Sensor Modules
- Terminal Modules
- Advanced Operator Panel (AOP30)

The coating on the modules protects the sensitive SMD components against corrosive gases, chemically active dust and moisture.

Nickel-plated busbars

All of the copper busbars used in the converter cabinets are nickel-plated to achieve the best possible immunity to environmental effects. Furthermore, there is no need to clean the contacts on the customer terminals as otherwise required for bare copper connections.

Note:

With some options, parts of the copper busbars cannot be nickel-plated for technical reasons.

[1] The properties of the SINAMICS S120 Cabinet Modules-2 described in this catalog are not transferable to cabinet units constructed to meet the requirements of specific applications.

© Siemens 2024

Design

PE bars

The Cabinet Modules-2 are delivered with a PE bar as standard. It is used to connect and fasten PE conductors.

Degrees of protection of Cabinet Modules-2

The EN 60529 standard covers the protection of electrical equipment by means of housings, covers or equivalent, and includes:

- Protection of persons against accidental contact with live or moving parts within the housing and protection of the equipment against the ingress of solid foreign bodies (touch protection and protection against ingress of solid foreign bodies)
- Protection of the equipment against the ingress of water (water protection)
- Abbreviations for the internationally agreed degrees of protection

The degrees of protection are specified by abbreviations comprising the code letters IP and two digits.

Degree of protection	**First code number** (touch protection and protection against solid foreign bodies)	**Second code number** (protection of the equipment against the ingress of water)
IP20 (Standard for air-cooled version)	Protected against solid foreign bodies diameter ≥ 12.5 mm	No water protection
IP21 (Option **M21**)	Protected against solid foreign bodies diameter ≥ 12.5 mm	Protected against drip water Vertically falling water drops shall not have a harmful effect.
IP23 (Option **M23**)	Protected against solid foreign bodies diameter ≥ 12.5 mm	Protected against spray water Water sprayed on both sides of the vertical at an angle of up to 60° shall not have a harmful effect.
IP43 (Option **M43**)	Protected against solid foreign bodies diameter ≥ 1 mm	Protected against spray water Water sprayed on both sides of the vertical at an angle of up to 60° shall not have a harmful effect.
IP54 (Option **M54**)	Dust protected Ingress of dust is not totally prevented, but dust must not be allowed to enter in such quantities that the functioning or safety of the equipment is impaired. Complete touch protection	Protected against splash water Water splashing onto the enclosure from any direction shall not have a harmful effect.

Function

Communication with higher-level controller and customer terminal strip

As the customer interface to the control system, a PROFIBUS interface is available on the CU320-2 DP Control Unit or a PROFINET interface on the CU320-2 PN Control Unit as standard.

For further information, please refer to the SINAMICS Low Voltage Engineering Manual.

Open-loop and closed-loop control functions

SINAMICS S120 can use a dynamic, high-precision closed-loop vector control (drive object type VECTOR), or a highly dynamic closed-loop servo control (drive object type SERVO).

© Siemens 2024

Function

Software and protective functions

The software functions available as standard are described below:

Software and protective functions	Description
Setpoint input	The setpoint can be specified both internally and externally; internally as a fixed setpoint, motorized potentiometer setpoint or jog setpoint, externally via the communications interface or an analog input. The internal fixed setpoint and the motorized potentiometer setpoint can be switched over or adjusted using control commands from any interface.
Motor identification	The automatic motor identification function makes commissioning faster and easier and optimizes closed-loop control of the drive.
Ramp-function generator	A user-friendly ramp-function generator with separately adjustable ramp-up and ramp-down times, together with adjustable rounding times in the lower and upper speed ranges, allows the drive to be smoothly accelerated and braked. This results in a good speed control response and contributes to the reduction of stress on the mechanical system. The down ramp can be parameterized separately for a quick stop.
$V_{dc\ max}$ controller	The $V_{dc\ max}$ controller automatically prevents overvoltages in the DC link, if the set down ramp is too short, for example. This may also extend the set ramp-down time. Note: This function only makes sense for single-axis applications.
Kinetic buffering (KIP)	For brief line supply failures, the kinetic energy of the rotating drive is used to buffer the DC link and therefore prevents fault trips. The converter remains operational as long as the drive can provide regenerative energy as a result of its motion and the DC link voltage does not drop below the shutdown threshold. When the line supply recovers within this time, the drive is again bumplessly accelerated up to its setpoint speed.
Automatic restart	The automatic restart switches the drive on again when the power is restored after a power failure, and ramps up to the current speed setpoint.
Flying restart	The flying restart function allows the converter to be switched to a motor that is still turning. With the voltage sensing capability provided by the optional VSM10, the flying restart time for large induction motors can be significantly reduced because the motor does not need to be de-magnetized.
Technology controller	Using the technology controller (PID controller) function module, level or flow controls and complex tension controls can be implemented, for example. The existing D component can act both on the system deviation as well as on the actual value (factory setting). The P, I, and D components are set separately.
Free function blocks (FFB)	Using the freely programmable function blocks, it is easy to implement logic and arithmetic functions for controlling the SINAMICS drive. The blocks can be programmed at the operator panel or the commissioning tools SINAMICS Startdrive or STARTER.
Drive Control Chart (DCC)	Drive Control Chart (DCC) is an additional tool for the easy configuration of technological functions for SINAMICS. The block library contains a large selection of control, arithmetic and logic blocks as well as extensive open-loop and closed-loop control functions. The user-friendly DCC editor enables easy graphics-based configuration, allows control loop structures to be clearly represented and provides a high degree of reusability of charts that have already been created. DCC is an add-on for the commissioning tools SINAMICS Startdrive or STARTER (→ Tools and Engineering).
SINAMICS Technology Extensions (SINAMICS TEC)	The SINAMICS TEC are configurable functions or Siemens technologies that can be added to extend firmware functions. These extensions are designed to allow implementation of highly complex, application-specific tasks for various sectors - such as storage and retrieval machines. Additional information about Technology Extensions (TEC) is provided in the "Technology functions" section.
I^2t recording for motor protection	A motor model stored in the converter software calculates the motor temperature based on the current speed and load. More exact sensing of the temperature, which also takes into account the influence of the ambient temperature, is possible by means of direct temperature sensing using Pt1000/KTY84 sensors in the motor winding.
Motor temperature evaluation	Motor protection by evaluating a KTY84, PTC, Pt100 or Pt1000 temperature sensor. When a KTY84 temperature sensor is connected, the limit values can be set for alarm or shutdown. When a PTC thermistor is connected, the system reaction to triggering of the thermistor (alarm or trip) can be defined.
Motor blocking protection	A blocked motor is detected and protected against thermal overloading by a fault trip.
Brake control	"Simple brake control" for controlling holding brakes: The holding brake is used to secure drives against unwanted motion when deactivated. The "extended braking control" Function module allows complex braking control, for example, for motor holding brakes and operational brakes. In the case of brakes with feedback signal, the brake control reacts to the feedback contacts of the brake.
Write protection	Write protection to prevent unintentional changing of the setting parameters (without password function).
Know-how protection	Know-how protection for encrypting stored data, e.g. to protect configuration know-how, and to protect against changes and duplication (with password function).
Web server	The web server provides information about the drive unit via its web pages. The web server is accessed using a web browser via unsecured (http) or secured transfer protocol (https).

Power unit protection

Power unit protection	Description
Ground fault monitoring at the output	A ground fault at the output is detected by a summation current monitor and results in shutdown in grounded systems.
Electronic short-circuit protection at the output	A short-circuit at the output (e.g. at the converter output terminals, in the motor cable or in the motor terminal box) is detected and the converter shuts down with "fault".
Thermal overload protection	An alarm is issued first when the overtemperature threshold responds. If the temperature continues to rise, the unit either shuts down or independently adjusts the pulse frequency or output current so that thermal load is reduced. Once the cause of the fault has been eliminated (e.g. cooling has been improved), the original operating values are automatically resumed.

© Siemens 2024

Technical specifications

The most important directives and standards are listed below. These are used as basis for the SINAMICS S120 Cabinet Modules-2 and they must be carefully observed to achieve an EMC-compliant configuration that is safe both in terms of functionality and in operation.

European directives	
2014/35/EU	Low-voltage Directive: Directive of the European Parliament and Council of February 26, 2014 for the harmonization of the laws of the member states relating to the provision of electrical equipment designed for use within certain voltage limits on the market (recast)
2014/30/EU	EMC Directive: Directive of the European Parliament and Council of February 26, 2014 for the harmonization of the laws of the member states relating to electromagnetic compatibility (recast)
2006/42/EC	Machinery Directive: Directive of the European Parliament and Council of May 17, 2006, on machinery and amending Directive 95/16/EC (recast)
2011/65/EU	RoHS II Directive: Directive of the European Parliament and of the Council of 8 June 2011 on the restriction of the use of certain hazardous substances in electrical and electronic equipment (recast)
European standards	
EN ISO 3744	Acoustics – Determination of sound power levels and sound energy levels of noise sources using sound pressure – Engineering methods for an essentially free field over a reflecting plane
EN ISO 13849-1	Safety of machinery – Safety-related parts of control systems Part 1: General principles for design (EN ISO 13849-1: 2006)
EN 60146-1-1	Semiconductor converters – General requirements and line-commutated converters Part 1-1: Specification of basic requirements
EN 60204-1	Safety of machinery – Electrical equipment of machines Part 1: General requirements
EN 60529	Degrees of protection provided by enclosures (IP code)
IEC 61508-1	Functional safety of electrical/electronic/programmable electronic safety-related systems Part 1: General requirements
IEC 61508-2	Functional safety of electrical/electronic/programmable electronic safety-related systems Part 2: Requirements for electrical/electronic/programmable electronic safety-related systems
IEC 61508-3	Functional safety of electrical/electronic/programmable electronic safety-related systems Part 3: Software requirements
EN 61800-2	Adjustable speed electrical power drive systems Part 2: General requirements – Rating specifications for low voltage adjustable frequency AC power drive systems
EN 61800-3	Adjustable speed electrical power drive systems Part 3: EMC requirements and specific test methods
EN 61800-5-1	Adjustable speed electrical power drive systems Part 5: Safety requirements Main section 1: Electrical and thermal requirements
EN 61800-5-2	Adjustable speed electrical power drive systems Part 5-2: Safety requirements – Functional safety (IEC 61800-5-2: 2007)

© Siemens 2024

Overview

The SINAMICS S120 Cabinet Modules-2 system comprises Active Line Connection Modules and Motor Modules in chassis-2 format.

Active Line Connection Modules-2

Active Line Connection Modules-2 comprise a Line Connection Module, an Active Interface Module, and an Active Line Module installed in a cabinet system.

Active Line Connection Modules-2 can supply energy to the intermediate DC circuit and return regenerative energy to the line supply (energy recovery).

Active Line Connection Modules-2 generate a regulated DC voltage which remains constant despite fluctuations in the line voltage. However, in this case, the line voltage must remain within the permissible tolerance range. Active Line Connection Modules-2 draw a virtually sinusoidal current from the supply system. Almost no harmonics occur. The total harmonic distortion factors of the current THD(I) and voltage THD(U) are typically in the range of approx. 3 % for rated current. THD(I) is calculated according to IEEE 519 (2014) and THD(U) according to IEC 61000-2-4 (2002). The stringent limit values of IEEE 519 (2014) are typically complied with.

Active Line Connection Modules-2 always also contain a Clean Power Filter and the required pre-charging input circuit for the Active Line Module.

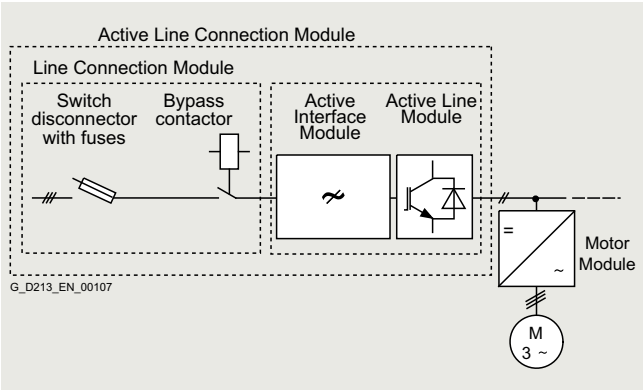

Active Line Connection Module-2 with Active Interface Module and Active Line Module ≤800 A

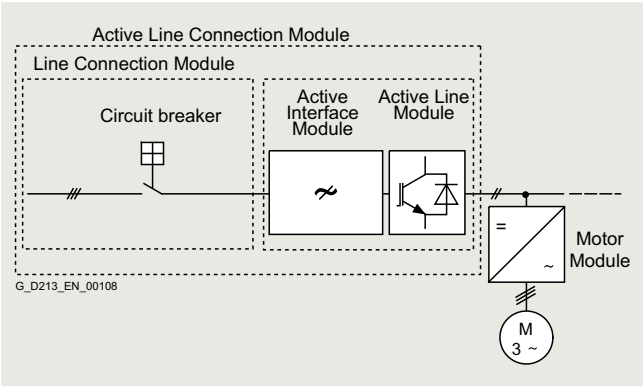

Active Line Connection Module-2 with Active Interface Module and Active Line Module >800 A

Motor Modules

Each SINAMICS S120 Cabinet Module-2 is equipped with a Motor Module in chassis-2 format and covers the power range from 315 kW to 800 kW (380 V to 480 V). The power rating can be extended up to approx. 4560 kW by connecting up to six Motor Modules in parallel.

© Siemens 2024

Technical specifications

General technical specifications

Electrical specifications			
Line voltages	380 ... 480 V 3 AC, ±10 % (-15 % <1 min)		
Line system configurations	Grounded TN/TT systems or non-grounded IT systems		
Line frequency	47 ... 63 Hz		
Output frequency [1] • Control mode Servo • Control mode Vector • Control mode V/f	 0 ... 550 Hz 0 ... 550 Hz 0 ... 550 Hz		
Efficiency • Motor Module	 > 98.5 %		
Overvoltage category	III acc. to EN 61800-5-1		
Control method	Vector/Servo control with and without encoder or V/f control		
Fixed speeds	15 fixed speeds plus 1 minimum speed, parameterizable (in the default setting, 3 fixed setpoints plus 1 minimum speed are selectable using terminal strip/PROFIBUS/PROFINET)		
Skippable speed ranges	4, parameterizable		
Setpoint resolution	0.001 r/min digital (14 bits + sign) 12 bits analog		
Braking operation	With Active Line Connection Modules, four-quadrant operation as standard (energy recovery). Braking by means of a Motor Module.		
Cabinet system			
Cabinet system	Rittal TS 8, doors with double-bit key, three-section base plates for cable entry		
Paint finish	RAL 7035 (indoor requirements)		
Mechanical specifications			
Degree of protection	IP20 (higher degrees of protection up to IP54 optionally available)		
Protection class	I acc. to EN 61800-5-1		
Touch protection	EN 50274/DGUV regulation 3 when used as intended		
Cooling method	Forced air cooling AF according to EN 60146		
Ambient conditions	**Storage** [2]	**Transport** [2]	**Operation**
Ambient temperature	-25 ... +55 °C (-13 ... 131 °F)	-25 ... +70 °C (-13 ... +158 °F) from -40 °C (-40 °F) for 24 hours	0 ... +40 °C (32 ... 104 °F) to +50 °C (122 °F) see derating data
Relative humidity (condensation not permissible)	5 ... 95 % Class 1K4 acc. to IEC 60721-3-1 (1997)	5 ... 95 % at 40 °C (104 °F) Class 2K3 acc. to IEC 60721-3-2 (1997)	5 ... 95 % Class 3K3 acc. to IEC 60721-3-3 (2002)
Environmental class/harmful chemical substances	Class 1C2 acc. to EN 60721-3-1 (1997)	Class 2C2 acc. to EN 60721-3-2 (1997)	Class 3C2 acc. to EN 60721-3-3 (2002)
Organic/biological influences	Class 1B1 acc. to EN 60721-3-1 (1997)	Class 2B1 acc. to EN 60721-3-2 (1997)	Class 3B1 acc. to EN 60721-3-3 (2002)
Mechanically active substances	Class 1S1 acc. to EN 60721-3-1 (1997)	Class 2S1 acc. to EN 60721-3-2 (1997)	Class 3S1 acc. to EN 60721-3-3 (2002)
Degree of pollution	2 acc. to IEC/EN 61800-5-1		
Installation altitude	≤2000 m (6562 ft) above sea level without derating, >2000 m (6562 ft) see Characteristic curves/derating data		
Mechanical strength	**Storage** [2]	**Transport** [2]	**Operation**
Vibratory load • Deflection • Acceleration	Class 1M2 acc. to EN 60721-3-1 (1997) 1.5 mm (0.06 in) at 5 ... 9 Hz 5 m/s² (16.4 ft/s²) at >9 ... 200 Hz	Class 2M2 acc. to EN 60721-3-2 (1997) 3.1 (0.12 in) mm at 5 ... 9 Hz 10 m/s² (32.8 ft/s²) at >9 ... 200 Hz	– 0.075 mm (0.003 in) at 10 ... 58 Hz 9.8 m/s² (32.2 ft/s²) at >58 ... 200 Hz
Shock load • Acceleration	Class 1M2 acc. to EN 60721-3-1 (1997) 40 m/s² (131 ft/s²) at 22 ms	Class 2M2 acc. to EN 60721-3-2 (1997) 100 m/s² (328 ft/s²) at 11 ms	Class 3M1 acc. to EN 60721-3-3 (2002) Test values acc. to EN 60068-2-27 test Ea: 5 g, 30 ms, 3 shocks
Compliance with standards			
Conformances/certificates of suitability, according to	CE (EMC Directive 2014/30/EU, Low voltage Directive 2014/35/EU, and Machinery Directive 2006/42/EC for Functional safety) RCM, RoHS II, UKCA		
Radio interference suppression	SINAMICS converter systems are not designed for connection to the public grid (first environment). Radio interference suppression is compliant with the EMC product standard for variable-speed drives EN 61800-3, "second environment" (industrial line supplies). EMC disturbances can occur when connected to the public grid. However, if additional measures are taken (e.g. → line filter), it can also be operated in the "first environment".		

Deviations from the specified class are underlined.

[1] Higher output frequencies available on request.

[2] In transport packaging.

© Siemens 2024

Characteristic curves

Derating data

SINAMICS S120 Cabinet Modules-2 and the associated system components are rated for an ambient temperature of 40 °C and installation altitudes up to 1000 m above sea level.

At ambient temperatures > 40 °C, the output current must be reduced. Ambient temperatures above 50 °C are not permissible.

At installation altitudes > 1000 m above sea level, it must be taken into account that the air pressure, and therefore air density, decreases as the height increases.
As a consequence, the cooling efficiency and the insulation capacity of the air also decrease.

Due to the reduced cooling efficiency, it is necessary to both reduce the ambient temperature and lower heat loss in the Cabinet Module by reducing the output current, whereby ambient temperatures lower than 40 °C may be offset to compensate.

The following table specifies the permissible output currents as a function of the installation altitude and ambient temperature for the various degrees of protection. (The permissible compensation between installation altitude and the ambient temperatures < 40 °C – air intake temperature at the entry to the Cabinet Module – has been taken into account in the specified values.)

The values apply under the precondition that it is guaranteed that the cooling air, as specified in the technical data, flows through the units as a result of the cabinet arrangement.

As an additional measure for installation altitudes from 2000 m up to 5000 m, an isolating transformer is required in order to reduce transient overvoltages according to EN 60664-1.
For additional information, please refer to the SINAMICS Low Voltage Engineering Manual.

Current derating factors for Cabinet Modules-2 as a function of the ambient/air intake temperature, the installation altitude and the degree of protection

Degree of protection	Installation altitude above sea level	**Current derating factor** (as a percentage of the rated current) for an ambient/air intake temperature of							
	m (ft)	15 °C (59 °F)	20 °C (68 °F)	25 °C (77 °F)	30 °C (86 °F)	35 °C (95 °F)	40 °C (104 °F)	45 °C (113 °F)	50 °C (122 °F)
IP20, IP21, IP23, IP43	0 ... 1000 (0 ... 3281)							**83 %**	**69 %**
	1001 ... 1500 (3284 ... 4921)						**98 %**	**81 %**	**67 %**
	1501 ... 2000 (4925 ... 6562)						**93 %**	**78 %**	**65 %**
	2001 ... 2500 (6565 ... 8202)			100 %		**96 %**			
	2501 ... 3000 (8205 ... 9843)				**99 %**				
	3001 ... 3500 (9846 ... 11483)								
	3501 ... 4000 (11486 ... 13123)			**96 %**					
	4001 ... 4500 (13127 ... 14764)		**97 %**						
	4501 ... 5000 (14767 ... 16404)	**98 %**							

Degree of protection	Installation altitude above sea level	**Current derating factor** (as a percentage of the rated current) for an ambient/air intake temperature of							
	m (ft)	10 °C (50 °F)	15 °C (59 °F)	20 °C (68 °F)	25 °C (77 °F)	30 °C (86 °F)	35 °C (95 °F)	40 °C (104 °F)	45 °C (113 °F)	50 °C (122 °F)
IP54	0 ... 1000 (0 ... 3281)							**83 %**	**69 %**	**54 %**
	1001 ... 1500 (3284 ... 4921)						**98 %**	**81 %**	**67 %**	**52 %**
	1501 ... 2000 (4925 ... 6562)						**93 %**	**78 %**	**65 %**	**50 %**
	2001 ... 2500 (6565 ... 8202)			100 %		**96 %**				
	2501 ... 3000 (8205 ... 9843)				**99 %**					
	3001 ... 3500 (9846 ... 11483)									
	3501 ... 4000 (11486 ... 13123)			**96 %**						
	4001 ... 4500 (13127 ... 14764)		**97 %**							
	4501 ... 5000 (14767 ... 16404)	**98 %**								

© Siemens 2024

Characteristic curves

Current derating for SINAMICS S120 Motor Modules in chassis-2 format as a function of the pulse frequency

To reduce motor noise or to increase output frequency, the pulse frequency can be increased relative to the factory setting (2.5 kHz). When the pulse frequency is increased, the derating factor of the output current must be taken into account. This derating factor must be applied to the currents specified in the technical specifications.
For additional information, please refer to the SINAMICS Low Voltage Engineering Manual.

Derating factor of the output current as a function of the pulse frequency

Motor Modules in chassis-2 format	Type rating at 400 V	Output current at 2.5 kHz	**Derating factor** at pulse frequency			
6SL3721-...	kW	A	4 kHz	5 kHz	7.5 kHz	8 kHz
380 ... 480 V 3 AC						
1TE36-6BE0	315	655	78 %	67 %	48 %	45 %
1TE37-4BE0	355	740	78 %	67 %	48 %	45 %
1TE38-1BE0	400	810	78 %	67 %	48 %	45 %
1TE38-8BE0	450	910	78 %	67 %	48 %	45 %
1TE41-0BE0	500	975	78 %	67 %	48 %	45 %
1TE41-1BE0	560	1075	78 %	67 %	48 %	45 %
1TE41-2BE0	630	1200	78 %	67 %	48 %	45 %
1TE41-3BE0	710	1325	78 %	67 %	48 %	45 %
1TE41-5BE0	800	1495	78 %	67 %	48 %	45 %

Maximum output frequencies achieved by increasing the pulse frequency

The adjustable pulse frequencies – and therefore the output frequencies that can be achieved with the factory-set current controller clock cycles – are listed below.

Current controller clock cycle T_I	**Adjustable pulse frequency f_p**	**Max. achievable output frequency f_A**		
		V/f mode	**Vector mode**	**Servo mode**
400 µs	2.5 kHz	208 Hz	208 Hz	–
	5.0 kHz	416 Hz	300 Hz	–
	7.5 kHz	550 Hz [1)]	300 Hz	–

[1)] Higher frequencies on request. For more information, see https://support.industry.siemens.com/cs/document/104020669

© Siemens 2024

Characteristic curves

Overload capability

SINAMICS S120 Cabinet Modules-2 have an overload reserve, e.g. to handle breakaway torques. If larger surge loads occur, this must be taken into account in the configuration. For drives with overload requirements, the appropriate base-load current must therefore be used as a basis for the required load.

Permissible overload assumes that the converter is operated at its base-load current before and after the overload occurs, based on a duty cycle duration of 300 s (low overload, high overload) or 60 s (duty cycle S6).

Another precondition is that the Motor Modules are operated at their factory-set pulse frequency at output frequencies >10 Hz.

For temporary, periodic duty cycles with high variations of load within the duty cycle, the relevant sections of the SINAMICS Low Voltage Engineering Manual must be observed.

Motor Modules in chassis-2 format

Motor Modules with power units in chassis-2 format can be configured on the basis of different base-load currents.

The base-load current for low overload I_L is based on a duty cycle of 110 % for 60 s.

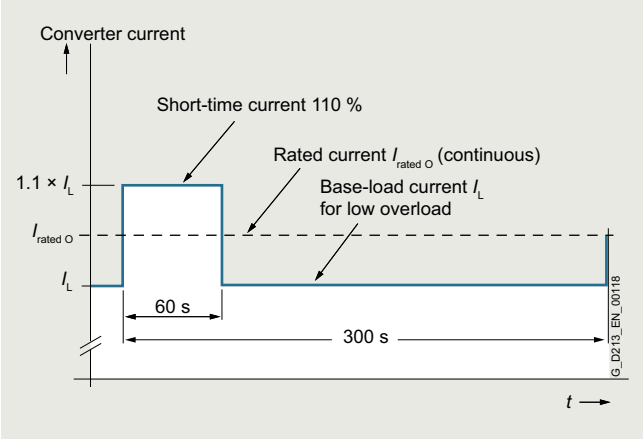

Low overload

The base-load current for a high overload I_H is based on a duty cycle of 150 % for 60 s.

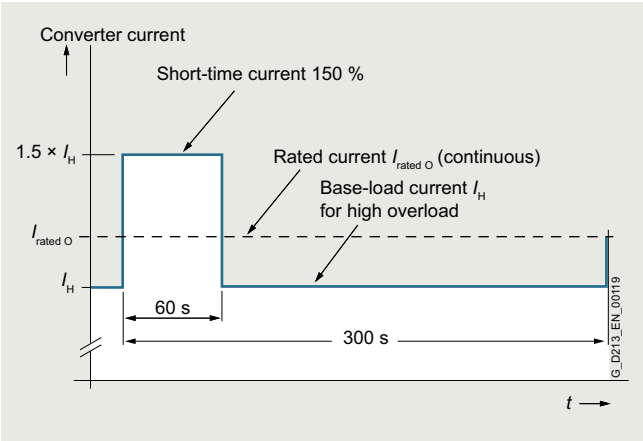

High overload

The base-load current I_{S6} is based on a duty cycle of 200 % for 6 s.

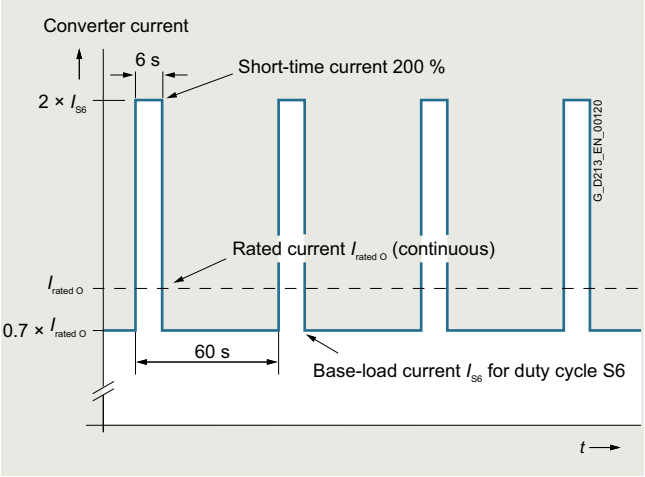

Duty cycle S6 with initial load with a duty cycle duration of 60 s

Active Line Connection Modules-2

The base-load current I_L is based on a load cycle of 115 % for 60 s with a duty cycle duration of 300 s.

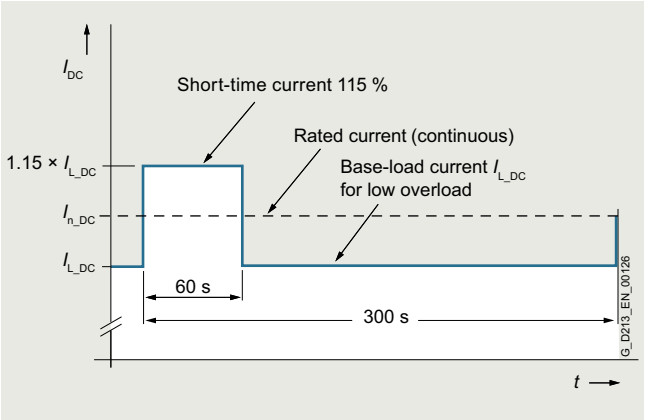

Low overload

The duty cycle with maximum current I_{max_DC} is based on a duty cycle of 150 % for 5 s with a duty cycle duration of 300 s.

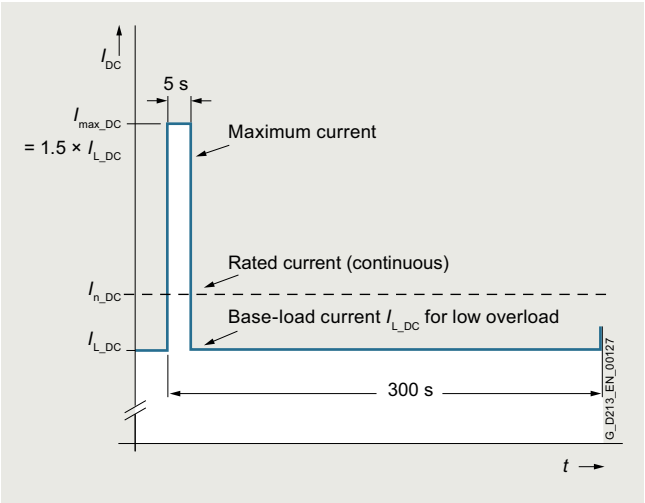

Duty cycle with maximum current

© Siemens 2024

Overview

Active Line Connection Modules-2 comprise a Line Connection Module, an Active Interface Module in chassis-2 format and an Active Line Module in chassis-2 format installed in a cabinet system. They can supply motoring energy to the DC link and return regenerative energy to the line supply.

The Active Line Connection Module-2 contains the line-side infeed via main switch and circuit breaker and pre-charging circuit. It connects the line-side supply network and the Active Line Module in chassis-2 format. It is equipped as standard with a radio interference suppression filter according to EN 61800-3 Category C3.

Active Line Connection Modules-2 generate a controlled DC voltage that is kept consistent regardless of fluctuations in the line voltage (the line voltage must lie within the permissible tolerances).

In the factory setting, the DC voltage is regulated to 1.5 times the rms value of the nominal voltage of the distribution system.

Active Line Connection Modules draw a virtually sinusoidal current from the supply system and cause virtually no line harmonics.

Active Line Connection Modules are suitable for connection to supply systems grounded at the neutral point (TN, TT) and non-grounded (IT) supply systems. The following voltages and currents are available:

Line voltage	Rated infeed/regenerative feedback current	Rated power
380 ... 480 V 3 AC	560 ... 1405 A	355 ... 900 kW

Design

Active Line Connection Modules-2 always include an Active Interface Module in chassis-2 format, which contains the associated Clean Power Filter and pre-charging circuit. The line filter that is included ensures compliance with the EMC requirements for the "second environment".

Active Line Connection Modules-2 are available for installing the Motor Modules to the right (article number "...RE0") and for installing the Motor Modules to the left (article number "...LE0"). The Line Connection Module with the line connection is installed directly next to the Active Interface Module.

Depending on the input current, the following versions are available:

- ≤ 800 A: Main circuit breaker with fuse switch disconnector
- > 800 A: Circuit breaker, type 3WL, with option **L25** as draw-out circuit breaker

Parallel connection for power increase

The power rating can be increased by connecting Active Line Connection Modules-2 in parallel. You must observe the following rules:

- Up to 6 identical Active Line Connection Modules-2 can be connected in parallel.
- Option **M88** must be ordered so that the infeed can be realized at the common DC link.
- A common Control Unit is required whenever the modules are connected in parallel. For more than 4 power units, these must be distributed as symmetrically as possible between at least two DRIVE-CLiQ ports (e.g. 3 x 2 Active Line Connection Modules-2 in series or at least 2 x 3 Active Line Connection Modules-2 in series).
- The parallel connection must be supplied from a common infeed point, i.e. the modules cannot be operated on different line supplies
- A derating factor of 5 % must be taken into consideration, regardless of the number of modules connected in parallel.
- The main contactors or circuit breakers of the respective Line Connection Modules must close together and simultaneously. Monitoring is performed via the -X50 terminals of the respective Line Connection Module

For additional information, please refer to the SINAMICS Low Voltage Engineering Manual.

© Siemens 2024

Selection and ordering data

Rated power at 400 V	Rated DC link current I_N	**Active Line Connection Module-2**
kW	A	Article No.
Line voltage 380 ... 480 V 3 AC (DC link voltage 510 ... 720 V DC)		
355	630	**6SL3731-7TE35-6RE0**
355	630	**6SL3731-7TE35-6LE0**
400	710	**6SL3731-7TE36-4RE0**
400	710	**6SL3731-7TE36-4LE0**
450	835	**6SL3731-7TE37-5RE0**
450	835	**6SL3731-7TE37-5LE0**
500	940	**6SL3731-7TE38-4RE0**
500	940	**6SL3731-7TE38-4LE0**
560	1010	**6SL3731-7TE38-8RE0**
560	1010	**6SL3731-7TE38-8LE0**
630	1100	**6SL3731-7TE41-0RE0**
630	1100	**6SL3731-7TE41-0LE0**
710	1245	**6SL3731-7TE41-2RE0**
710	1245	**6SL3731-7TE41-2LE0**
800	1415	**6SL3731-7TE41-3RE0**
800	1415	**6SL3731-7TE41-3LE0**
900	1575	**6SL3731-7TE41-4RE0**
900	1575	**6SL3731-7TE41-4LE0**

Integration

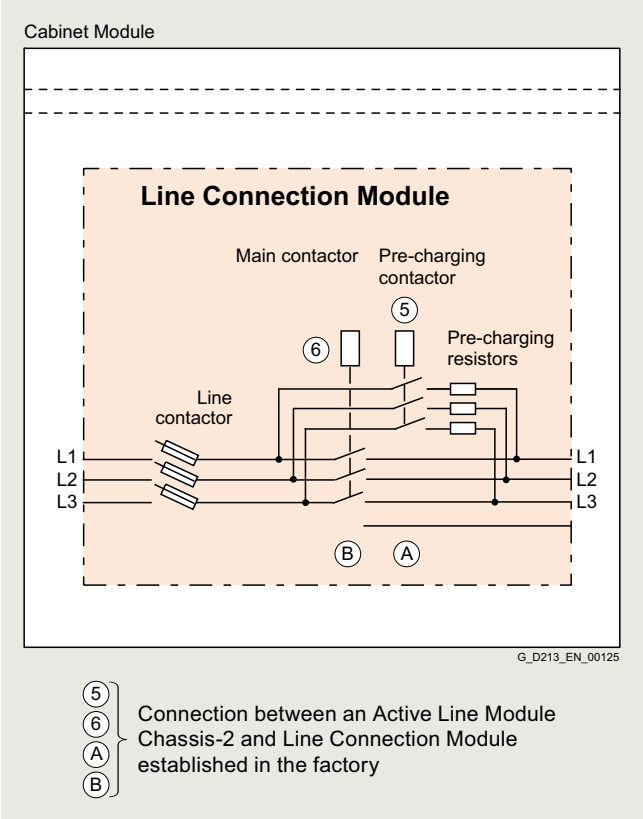

Connection example of an Active Line Connection Module-2 (Line Connection Module)

© Siemens 2024

Integration

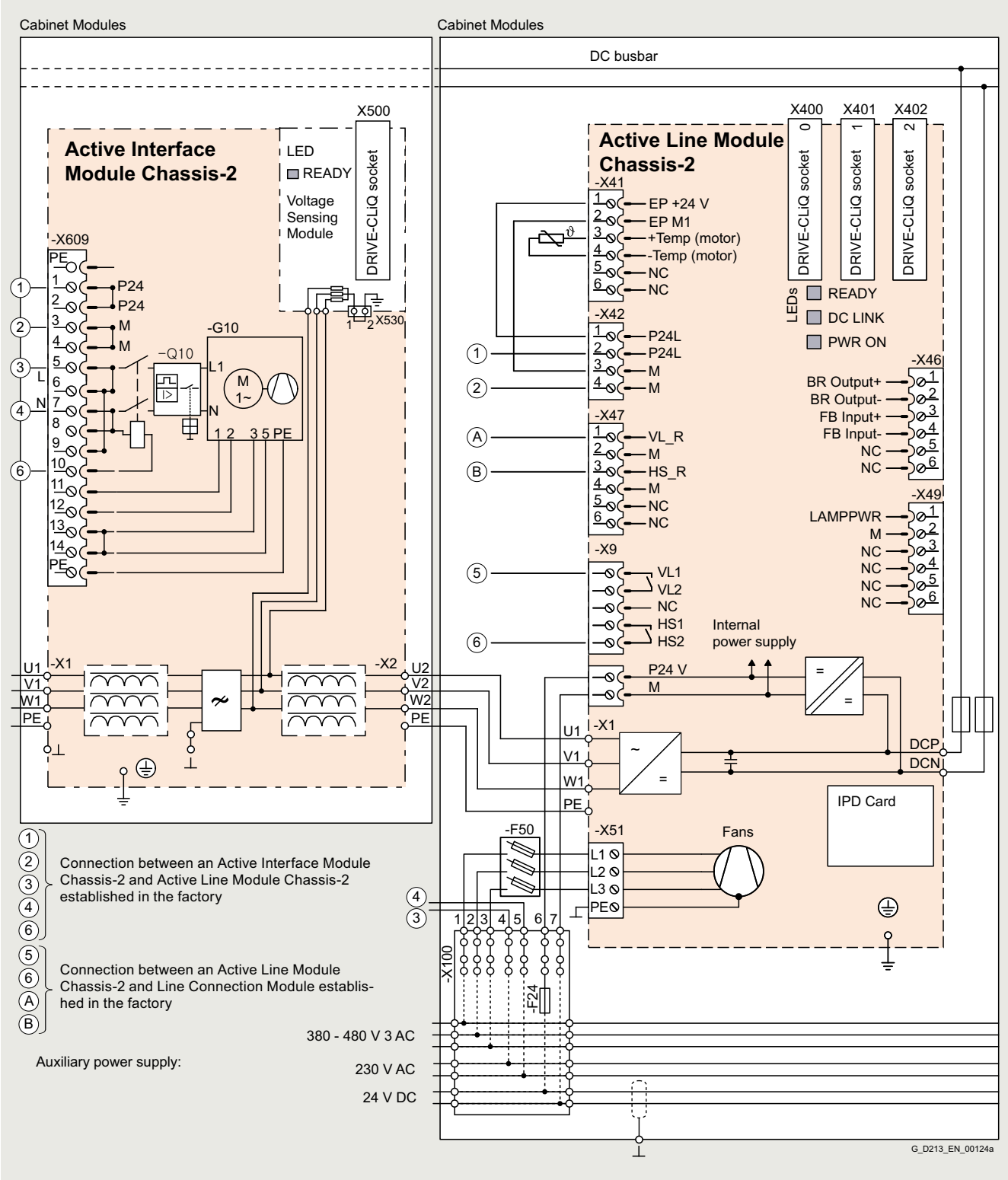

Connection example of an Active Line Connection Module-2 (Active Interface Module in chassis-2 format and Active Line Module in chassis-2 format)

© Siemens 2024

Technical specifications

Line voltage 380 ... 480 V 3 AC		Active Line Connection Modules-2			
		6SL3731-7TE35-6RE0[1)] 6SL3731-7TE35- 6LE0[1)]	6SL3731-7TE36-4RE0[1)] 6SL3731-7TE36-4LE0[1)]	6SL3731-7TE37-5RE0[1)] 6SL3731-7TE37-5LE0[1)]	6SL3731-7TE38-4RE0[1)] 6SL3731-7TE38-4LE0[1)]
Rated power					
• At $I_{N\,DC}$ (50 Hz 400 V)	kW	**355**	**400**	**450**	**500**
• At $I_{L\,DC}$ (50 Hz 400 V)	kW	300	350	400	450
• At $I_{N\,DC}$ (60 Hz 460 V)	hp	500	550	650	700
• At $I_{L\,DC}$ (60 Hz 460 V)	hp	400	500	550	650
DC link current					
• Rated current $I_{N\,DC}$	A	630	710	835	940
• Base-load current $I_{L\,DC}$ [2)]	A	571	649	760	854
• Maximum current $I_{max\,DC}$	A	857	974	1140	1281
Infeed/regenerative feedback current					
• Rated current $I_{N\,I}$	A	560	635	745	840
• Maximum current $I_{max\,I}$	A	773	878	1028	1155
Pulse frequency	kHz	4	4	4	4
Current demand					
• 24 V DC auxiliary power supply	A	1.5	1.5	1.5	1.5
• 230 V 1 AC	A	4.1	4.1	4.1	4.1
DC link capacitance					
• Active Line Module	µF	16450	16450	18800	18800
• Drive line-up, max.	µF	250000	250000	250000	250000
Power loss, max. [3)]					
• at 50 Hz 400 V	kW	12.14	12.65	16.38	17.32
• at 60 Hz 460 V	kW	12.14	12.65	16.38	17.32
Cooling air requirement	m^3/s (ft^3/s)	1.3 (45.9)	1.3 (45.9)	1.3 (45.9)	1.3 (45.9)
Sound pressure level L_{pA} [4)] (1 m) at 50/60 Hz	dB	75/75	75/75	75/75	75/75
Line supply connection L1, L2, L3		4 x M12	4 x M12	10 x M12	10 x M12
• Conductor cross-section, max. (IEC)	mm^2	8 × 240	8 × 240	8 × 240	8 × 240
PE/GND connection		PE bar	PE bar	PE bar	PE bar
• Busbar cross-section	mm^2	600	600	600	600
• Conductor cross-section, max. (IEC)	mm^2	240	240	240	240
Cable length, max. [5)] Shielded/unshielded	m (ft)	3900/5850 (12795/19193)	3900/5850 (12795/19193)	3900/5850 (12795/19193)	3900/5850 (12795/19193)
Degree of protection (standard version)		IP20	IP20	IP20	IP20
Dimensions (standard version)					
• Width	mm (in)	1600 (63.0)	1600 (63.0)	1600 (63.0)	1600 (63.0)
• Height	mm (in)	2200 (86.6)	2200 (86.6)	2200 (86.6)	2200 (86.6)
• Depth	mm (in)	600 (23.6)	600 (23.6)	600 (23.6)	600 (23.6)
Weight, approx. (standard version)	kg (lb)	989 (2180)	994 (2191)	1191 (2626)	1192 (2628)
Frame size					
• Line Connection Module		HL	HL	JL	JL
• Active Interface Module		FS2	FS2	FS4	FS4
• Active Line Module		FS2	FS2	FS2+	FS2+
Rated short-circuit current according to IEC	kA	50	50	100	100
Minimum short-circuit current [6)]	kA	18	18	2	2

1) Article number "...RE0": Motor Modules installed to the right, "...LE0": Motor Modules installed to the left.

2) The base-load current $I_{L\,DC}$ is based on a duty cycle of 115 % for 60 s or $I_{max\,DC}$ for 5 s with a duty cycle duration of 300 s.

3) The specified power loss represents the maximum value at 100 % utilization. The value is lower under normal operating conditions.

4) Total sound pressure level of Active Interface Module and Active Line Module.

5) Total of all motor cables and DC link. Longer cable lengths for specific configurations are available on request. For additional information, please refer to the SINAMICS Low Voltage Engineering Manual.
The cable lengths are valid for use in IT systems. When used in TN systems, the cable lengths are shortened to 30 % of the specified value. When used in the TN system and when operating with increased pulse frequency, you will obtain the permitted cable lengths upon request.

6) Current required for reliably triggering protective devices.

© Siemens 2024

Technical specifications

Line voltage 380 ... 480 V 3 AC		Active Line Connection Modules-2				
		6SL3731-7TE38-8RE0[1)] 6SL3731-7TE38-8LE0[1)]	6SL3731-7TE41-0RE0[1)] 6SL3731-7TE41-0LE0[1)]	6SL3731-7TE41-2RE0[1)] 6SL3731-7TE41-2LE0[1)]	6SL3731-7TE41-3RE0[1)] 6SL3731-7TE41-3LE0[1)]	6SL3731-7TE41-4RE0[1)] 6SL3731-7TE41-4LE0[1)]
Rated power						
• At $I_{N\ DC}$ (50 Hz 400 V)	kW	**560**	**630**	**710**	**800**	**900**
• At $I_{L\ DC}$ (50 Hz 400 V)	kW	500	560	630	710	800
• At $I_{N\ DC}$ (60 Hz 460 V)	hp	800	900	1050	1150	1300
• At $I_{L\ DC}$ (60 Hz 460 V)	hp	700	800	900	1000	1150
DC link current						
• Rated current $I_{N\ DC}$	A	1010	1100	1245	1415	1575
• Base-load current $I_{L\ DC}$ [2)]	A	915	1004	1131	1287	1431
• Maximum current $I_{max\ DC}$	A	1373	1506	1697	1931	2147
Infeed/regenerative feedback current						
• Rated current $I_{N\ I}$	A	900	985	1110	1260	1405
• Maximum current $I_{max\ I}$	A	1238	1358	1530	1740	1935
Pulse frequency	kHz	4	4	4	4	4
Current demand						
• 24 V DC auxiliary power supply	A	1.5	1.5	1.5	1.5	1.5
• 230 V 1 AC	A	4.1	4.1	4.1	4.1	4.1
DC link capacitance						
• Active Line Module	µF	25900	25900	25900	40800	40800
• Drive line-up, max.	µF	250000	250000	250000	250000	250000
Power loss, max. [3)]						
• at 50 Hz 400 V	kW	17.70	18.55	19.62	23.9	26.5
• at 60 Hz 460 V	kW	17.70	18.55	19.62	23.9	26.5
Cooling air requirement	m^3/s (ft^3/s)	1.7 (60.0)	1.7 (60.0)	1.7 (60.0)	1.7 (60.0)	1.7 (60.0)
Sound pressure level L_{pA} [4)] (1 m) at 50/60 Hz	dB	75/75	75/75	75/75	75/75	7575
Line supply connection L1, L2, L3		10 x M12	10 x M12	10 x M12	10 x M12	10 x M12
• Conductor cross-section, max. (IEC)	mm^2	8 × 240	8 × 240	8 × 240	8 × 240	8 × 240
PE/GND connection		PE bar	PE bar	PE bar	PE bar	PE bar
• Busbar cross-section	mm^2	600	600	600	600	600
• Conductor cross-section, max. (IEC)	mm^2	240	240	240	240	240
Cable length, max. [5)] Shielded/unshielded	m (ft)	3900/5850 (12795/19193)	3900/5850 (12795/19193)	3900/5850 (12795/19193)	3900/5850 (12795/19193)	3900/5850 (12795/19193)
Degree of protection (standard version)		IP20	IP20	IP20	IP20	IP20
Dimensions (standard version)						
• Width	mm (in)	1800 (70.9)	1800 (70.9)	1800 (70.9)	1800 (70.9)	1800 (70.9)
• Height	mm (in)	2200 (86.6)	2200 (86.6)	2200 (86.6)	2200 (86.6)	2200 (86.6)
• Depth	mm (in)	600 (23.6)	600 (23.6)	600 (23.6)	600 (23.6)	600 (23.6)
Weight, approx. (standard version)	kg (lb)	1264 (2787)	1345 (2965)	1406 (3100)	1509 (3326)	1529 (3371)
Frame size						
• Line Connection Module		JL	JL	JL	JL	JL
• Active Interface Module		FS4	FS4	FS4	FS4	FS4
• Active Line Module		FS4	FS4	FS4	FS4+	FS4+
Rated short-circuit current according to IEC	kA	100	100	100	100	100
Minimum short-circuit current [6)]	kA	2	2.5	2.5	3.2	3.2

1) Article number "...RE0": Motor Modules installed to the right, "...LE0": Motor Modules installed to the left.

2) The base-load current $I_{L\ DC}$ is based on a duty cycle of 115 % for 60 s or $I_{max\ DC}$ for 5 s with a duty cycle duration of 300 s.

3) The specified power loss represents the maximum value at 100 % utilization. The value is lower under normal operating conditions.

4) Total sound pressure level of Active Interface Module and Active Line Module.

5) Total of all motor cables and DC link. Longer cable lengths for specific configurations are available on request. For additional information, please refer to the SINAMICS Low Voltage Engineering Manual.
The cable lengths are valid for use in IT systems. When used in TN systems, the cable lengths are shortened to 30 % of the specified value. When used in the TN system and when operating with increased pulse frequency, you will obtain the permitted cable lengths upon request.

6) Current required for reliably triggering protective devices.

© Siemens 2024

Overview

Motor Modules in chassis-2 format are available in the power range from 315 kW to 630 kW.

Line voltage	DC link voltage	Type rating
380 ... 480 V 3 AC	510 ... 720 V DC	315 ... 800 kW

By connecting in parallel up to six Motor Modules, which are operated on one Control Unit and supply one motor, it is possible to increase the available shaft power (taking into account the derating factors according to the SINAMICS Low Voltage Engineering Manual).

Design

Motor Modules in chassis-2 format contain the following components as standard:

- Retaining device for the DC busbar, including the interface to the DC connections of the Motor Module (the necessary DC busbar must be provided separately as option **M80** to **M87**.)
- Lateral connection busbars for the motor cable are nickel-plated.
- DC fuses
- Cable retaining bar for the power cables
- DRIVE-CLiQ interface (3 DRIVE-CLiQ sockets), without Control Unit
- Auxiliary power supply, including auxiliary voltage module and cables for looping through to the next Cabinet Module
- Nickel-plated PE busbar (60 x 10 mm), including jumper for looping through to the next Cabinet Module
- EMC-compliant design thanks to additional shielding measures and appropriately routed cables

Parallel connection for power increase

The power rating can be increased by connecting Motor Modules in chassis-2 format in parallel. You must observe the following rules:

- Up to 6 identical Motor Modules can be connected in parallel.
- A common Control Unit is required whenever the modules are connected in parallel. For more than 4 power units, these must be distributed as symmetrically as possible between at least two DRIVE-CLiQ ports (e.g. 3 x 2 Motor Modules in chassis-2 format in series or at least 2 x 3 Motor Modules in chassis-2 format in series).
- The motor supply cables must have the same length (symmetrical design).
- Power must be supplied to the Motor Modules from a common DC busbar.
- A derating factor of 5 % must be taken into consideration, regardless of the number of modules connected in parallel.
- For motors with multi-winding systems, please observe the notes in the Low Voltage Engineering Manual.
- For motors with a single-winding system, the length of the supply lines must be kept to a minimum. The respective cable lengths are listed in the following tables.

Motor Module in chassis-2 format	**P_N**	**I_{Neff}**	**Minimum cable length**
6SL3721-...	kW	A	m (ft)
1TE36-6BE0	315	655	13 (42.7)
1TE37-4BE0	355	740	12 (39.4)
1TE38-1BE0	400	810	10 (32.8)
1TE38-8BE0	450	910	9 (29.5)
1TE41-0BE0	500	975	8 (26.2)
1TE41-1BE0	560	1075	8 (26.2)
1TE41-2BE0	630	1200	8 (26.2)
1TE41-3BE0	710	1325	8 (26.2)
1TE41-5BE0	800	1495	8 (26.2)

Note:
No mixed operation possible!
It is only possible to connect identical power units in parallel if all power units have the same hardware version. Mixed operation between Motor Modules in chassis format (Article No. 6SL3720-xxxxx–xAA3) and Motor Modules in chassis-2 format (Article No. 6SL3721-xxxxx–xBE0) is not possible.

Selection and ordering data

Type rating at 400 V	Rated output current I_N	**Motor Modules in chassis-2 format**
kW	A	Article No.
Line voltage 380 ... 480 V 3 AC (DC link voltage 510 ... 720 V DC)		
315	655	**6SL3721-1TE36-6BE0**
355	740	**6SL3721-1TE37-4BE0**
400	810	**6SL3721-1TE38-1BE0**
450	910	**6SL3721-1TE38-8BE0**
500	975	**6SL3721-1TE41-0BE0**
560	1075	**6SL3721-1TE41-1BE0**
630	1200	**6SL3721-1TE41-2BE0**
710	1325	**6SL3721-1TE41-3BE0**
800	1495	**6SL3721-1TE41-5BE0**

© Siemens 2024

Integration

Motor Modules are controlled by the CU320-2 DP or CU320-2 PN Control Unit. Communication between the Control Unit and Modules is established via a DRIVE-CLiQ connection.

If the Control Unit is integrated in the same cabinet as an option with order code **K90** or **K95**, these communication cables will already be installed. If the Control Unit is to be mounted externally, the DRIVE-CLiQ cable will not be included in the scope of supply and must be configured on site.

For additional information, please refer to the SINAMICS Low Voltage Engineering Manual.

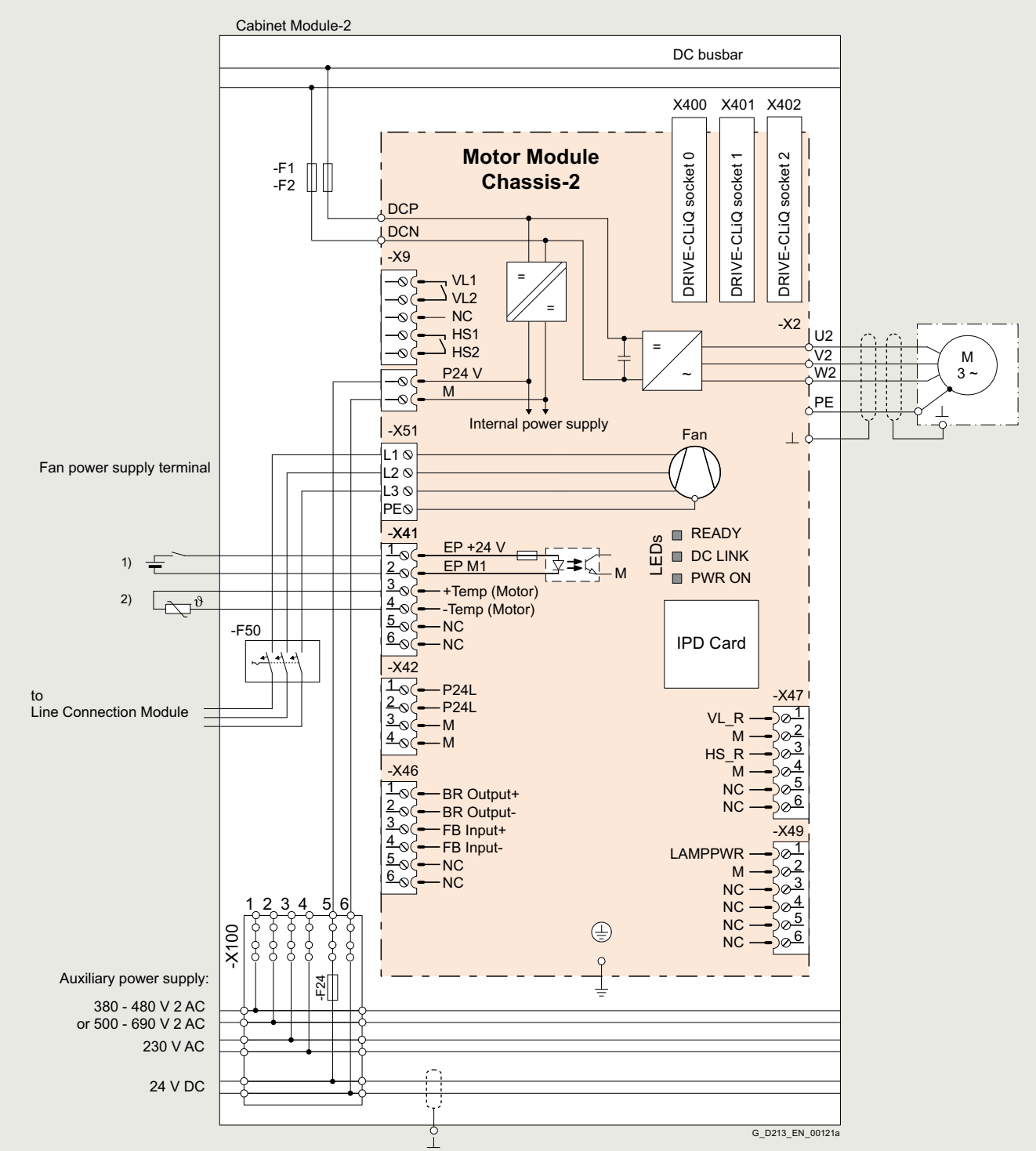

1) Required for Safety Integrated.
2) Connection of temperature sensor for motors without DRIVE-CLiQ interface.

Connection example of a Motor Module in chassis-2 format

© Siemens 2024

Technical specifications

Line voltage 380 ... 480 V 3 AC **DC link voltage 510 ... 720 V DC**		**Motor Modules in chassis-2 format**			
		6SL3721-1TE36-6BE0	6SL3721-1TE37-4BE0	6SL3721-1TE38-1BE0	6SL3721-1TE38-8BE0
Type rating					
• At I_L (50 Hz 400 V) [1]	kW	**315**	**355**	**400**	**450**
• At I_H (50 Hz 400 V) [1]	kW	280	315	355	400
• At I_L (60 Hz 460 V) [2]	hp	500	600	650	700
• At I_H (60 Hz 460 V) [2]	hp	450	500	550	650
Output current					
• Rated current $I_{N\,O}$	A	655	740	810	910
• Base-load current I_L [3]	A	620	700	770	865
• Base-load current I_H [4]	A	555	620	675	760
• Maximum current $I_{max\,O}$	A	917	1036	1134	1274
DC link current					
• Rated current $I_{N\,DC}$		785	890	975	1090
Current demand					
• 24 V DC auxiliary power supply	A	1.3	1.3	1.3	1.3
• 400 V AC	A	1.8	1.8	1.8	1.8
DC link capacitance	µF	16450	16450	18800	18800
Pulse frequency [5]					
• Rated frequency	kHz	2.5	2.5	2.5	2.5
• Pulse frequency, max.					
- Without current derating	kHz	2.5	2.5	2.5	2.5
- With current derating	kHz	8	8	8	8
Power loss, max. [6]					
• At 50 Hz 400 V	kW	6.7	7.0	7.8	8.8
• At 60 Hz 460 V	kW	6.9	7.3	8.1	9.1
Cooling air requirement	m^3/s (ft^3/s)	0.64 (22.6)	0.64 (22.6)	0.64 (22.6)	0.64 (22.6)
Sound pressure level L_{pA} (1 m) at 50/60 Hz	dB	53 ... 72	53 ... 72	53 ... 72	53 ... 72
Motor connection U2, V2, W2		4 x M12	4 x M12	4 x M12	4 x M12
• Conductor cross-section, max. (IEC)	mm^2	4 x 240	4 x 240	4 x 240	4 x 240
Cable length, max. [7]					
• Shielded	m (ft)	300 (984)	300 (984)	100 (328) [10]	100 (328) [10]
• Unshielded	m (ft)	450 (1476)	450 (1476)	100 (328) [10]	100 (328) [10]
PE/GND connection		PE bar	PE bar	PE bar	PE bar
• Busbar cross-section	mm^2	600	600	600	600
• Conductor cross-section, max. (IEC)	mm^2	240	240	240	240
Degree of protection		IP20	IP20	IP20	IP20
Dimensions					
• Width [8]	mm (in)	600 (23.6)	600 (23.6)	600 (23.6)	600 (23.6)
• Height [9]	mm (in)	2200 (86.6)	2200 (86.6)	2200 (86.6)	2200 (86.6)
• Depth	mm (in)	600 (23.6)	600 (23.6)	600 (23.6)	600 (23.6)
Weight, approx.	kg (lb)	257 (567)	265 (584)	270 (595)	270 (595)
Frame size		FS2	FS2	FS2+	FS2+
Rated short-circuit current ICC according to IEC	kA	100	100	100	100

[1] Rated power of a typical 6-pole standard asynchronous motor based on I_L or I_H for 400 V 3 AC 50 Hz.

[2] Rated power of a typical 6-pole standard asynchronous motor based on I_L or I_H for 460 V 3 AC 60 Hz.

[3] The base-load current for a low overload I_L is based on a duty cycle of 110 % for 60 s with a duty cycle duration of 300 s.

[4] The base-load current for a high overload I_H is based on a duty cycle of 150 % for 60 s with a duty cycle duration of 300 s.

[5] Information regarding the correlation between the pulse frequency and max. output current/output frequency is provided in the SINAMICS Low Voltage Engineering Manual.

[6] The specified power loss represents the maximum value at 100 % utilization. The value is lower under normal operating conditions.

[7] Total of all motor cables. Longer cable lengths for specific configurations are available on request. For additional information, please refer to the SINAMICS Low Voltage Engineering Manual.

[8] With option **L07** (dv/dt filter compact plus VPL), **L08** (motor reactor), **L10** (dv/dt filter plus VPL), **L34** (circuit breaker at the output): Additional cabinet 600 mm (23.62 in) wide.

[9] The cabinet height increases by 250 mm (9.84 in) with degree of protection IP21, and by 400 mm (15.7 in) with degrees of protection IP23, IP43 and IP54.

[10] Longer cables available on request.

© Siemens 2024

Technical specifications

Line voltage 380 ... 480 V 3 AC DC link voltage 510 ... 720 V DC		Motor Modules in chassis-2 format				
		6SL3721-1TE41-0BE0	6SL3721-1TE41-1BE0	6SL3721-1TE41-2BE0	6SL3721-1TE41-3BE0	6SL3721-1TE41-5BE0
Type rating						
• At I_L (50 Hz 400 V) [1]	kW	**500**	**560**	**630**	**710**	**800**
• At I_H (50 Hz 400 V) [1]	kW	450	500	560	630	710
• At I_L (60 Hz 460 V) [2]	hp	750	850	950	1050	1200
• At I_H (60 Hz 460 V) [2]	hp	650	750	850	900	1050
Output current						
• Rated current $I_{N\,O}$	A	975	1075	1200	1325	1495
• Base-load current I_L [3]	A	910	1000	1145	1260	1420
• Base-load current I_H [4]	A	800	890	1000	1100	1240
• Maximum current $I_{max\,O}$	A	1365	1505	1710	1855	2093
DC link current						
• Rated current $I_{N\,DC}$		1170	1290	1440	1590	1795
Current demand						
• 24 V DC auxiliary power supply	A	1.3	1.3	1.3	1.3	1.3
• 400 V AC	A	1.8	1.8	1.8	1.8	1.8
DC link capacitance	µF	25900	25900	25900	40800	40800
Pulse frequency [5]						
• Rated frequency	kHz	2.5	2.5	2.5	2.5	2.5
• Pulse frequency, max.						
- Without current derating	kHz	2.5	2.5	2.5	2.5	2.5
- With current derating	kHz	8	8	8	8	8
Power loss, max. [6]						
• At 50 Hz 400 V	kW	9.2	9.8	11.0	12.1	13.7
• At 60 Hz 460 V	kW	9.5	10.1	11.4	13.2	14.8
Cooling air requirement	m^3/s (ft^3/s)	0.64 (22.6)	0.64 (22.6)	0.64 (22.6)	0.64 (22.6)	0.64 (22.6)
Sound pressure level L_{pA} (1 m) at 50/60 Hz	dB	53 ... 72	53 ... 72	53 ... 72	53 ... 72	53 ... 72
Motor connection U2, V2, W2		M12 screws	M12 screws	M12 screws	M12 screws	M12 screws
• Conductor cross-section, max. (IEC)	mm^2	6 × 240	6 × 240	6 × 240	6 × 240	6 × 240
Cable length, max. [7]						
• Shielded	m (ft)	300 (984)	300 (984)	300 (984)	100 (328) [10]	100 (328) [10]
• Unshielded	m (ft)	450 (1476)	450 (1476)	450 (1476)	100 (328) [10]	100 (328) [10]
PE/GND connection		PE bar	PE bar	PE bar	PE bar	PE bar
• Busbar cross-section	mm^2	600	600	600	600	600
• Conductor cross-section, max. (IEC)	mm^2	240	240	240	240	240
Degree of protection		IP20	IP20	IP20	IP20	IP20
Dimensions						
• Width [8]	mm (in)	600 (23.6)	600 (23.6)	600 (23.6)	600 (23.6)	600 (23.6)
• Height [9]	mm (in)	2200 (86.6)	2200 (86.6)	2200 (86.6)	2200 (86.6)	2200 (86.6)
• Depth	mm (in)	600 (23.6)	600 (23.6)	600 (23.6)	600 (23.6)	600 (23.6)
Weight, approx.	kg (lb)	305 (672)	305 (672)	305 (672)	316 (697)	316 (697)
Frame size		FS4	FS4	FS4	FS4+	FS4+
Rated short-circuit current ICC according to IEC	kA	100	100	100	100	100

[1] Rated power of a typical 6-pole standard asynchronous motor based on I_L or I_H for 400 V 3 AC 50 Hz.

[2] Rated power of a typical 6-pole standard asynchronous motor based on I_L or I_H for 460 V 3 AC 60 Hz.

[3] The base-load current for a low overload I_L is based on a duty cycle of 110 % for 60 s with a duty cycle duration of 300 s.

[4] The base-load current for a high overload I_H is based on a duty cycle of 150 % for 60 s with a duty cycle duration of 300 s.

[5] Information regarding the correlation between the pulse frequency and max. output current/output frequency is provided in the SINAMICS Low Voltage Engineering Manual.

[6] The specified power loss represents the maximum value at 100 % utilization. The value is lower under normal operating conditions.

[7] Total of all motor cables. Longer cable lengths for specific configurations are available on request. For additional information, please refer to the SINAMICS Low Voltage Engineering Manual.

[8] With option **L07** (dv/dt filter compact plus VPL), **L08** (motor reactor), **L10** (dv/dt filter plus VPL), **L34** (circuit breaker at the output): Additional cabinet 600 mm (23.62 in) wide.

[9] The cabinet height increases by 250 mm (9.84 in) with degree of protection IP21, and by 400 mm (15.7 in) with degrees of protection IP23, IP43 and IP54.

[10] Longer cables available on request.

© Siemens 2024

Overview

A detailed description of all options is to be found in chapter 6 as well as in SiePortal.

The following options are available for the Active Line Connection Modules-2 and Motor Modules in chassis-2 format.

Order code	Option designation	Active Line Connection Module-2	Motor Module in chassis-2 format
Electrical options			
G33 [1]	CBE20 Communication Board	✓	✓
G51	1 x TM150 temperature sensor evaluation unit	✓	✓
G52	2 x TM150 temperature sensor evaluation units	✓	✓
G53	3 x TM150 temperature sensor evaluation units	✓	–
G54	4 x TM150 temperature sensor evaluation units	✓	–
G60	TM31 Terminal Module	✓	✓
G61	Additional TM31 Terminal Module	✓	✓
G62 [1]	TB30 Terminal Board	✓	✓
K01 ... K05	Safety license Extended Functions for 1 to 5 axes	–	✓
K08 [1]	AOP30 Advanced Operator Panel installed in the cabinet door	✓	✓
K46	SMC10 Sensor Module Cabinet-Mounted	–	✓
K48	SMC20 Sensor Module Cabinet-Mounted	–	✓
K50	SMC30 Sensor Module Cabinet-Mounted	–	✓
K51	VSM10 Voltage Sensing Module	–	✓
K52	Second SMC30 Sensor Module Cabinet-Mounted	–	✓
K76	Auxiliary power generation (in the Line Connection Module)	✓	–
K82	Terminal module for activating "Safe Torque Off" and "Safe Stop 1"	–	✓
K87	TM54F Terminal Module	–	✓
K88	SBA Safe Brake Adapter, 230 V AC	–	✓
K90	CU320-2 DP Control Unit	✓	✓
K94 [1]	Performance expansion for CU320-2 Control Unit	✓	✓
K95	CU320-2 PN Control Unit	✓	✓
L07	dv/dt filter plus Voltage Peak Limiter	–	✓
L08	Motor reactor	–	✓
L10	dv/dt filter plus Voltage Peak Limiter	–	✓
L21	Surge suppression	✓	–
L25	Withdrawable circuit breaker in place of a fixed-mounted circuit breaker	✓	–
L34	Output-side circuit breaker (motor-driven)	–	–
L40	Line filter monitoring	✓	–
L41	Current transformer upstream of main circuit breaker	✓	–
L45	EMERGENCY OFF pushbutton installed in the cabinet door	✓	–
L50	Cabinet lighting with service socket	✓	–
L55	Cabinet anti-condensation heating	✓	✓
L87	Insulation monitoring	✓	–
N52	DC link fuses	✓	–
P10	Measuring instrument for line supply values; mounted in cabinet door (includes **L41**)	✓	–
P11	Measuring instrument for line supply values with PROFIBUS connection mounted in cabinet door (includes **L41**)	✓	–
Y09	Special paint finish for cabinet	✓	–
Y11	Factory-assembled transport units	✓	–

✓	Option can be ordered for this Cabinet Module-2
–	Option cannot be ordered for this Cabinet Module-2

[1] Only in conjunction with option **K90** or **K95**.

© Siemens 2024

Options

Overview

Order code	Option designation	Active Line Connection Module-2	Motor Module in chassis-2 format
Mechanical options			
M06	Base 100 mm high, RAL 7022	✓	✓
M07	Cable compartment 200 mm high, RAL 7035	✓	✓
M21	Degree of protection IP21	✓	✓
M23, M43	Degree of protection IP23, degree of protection IP43 (each contains **M60**)	✓	✓
M26	Side panel mounted to the right	✓	✓
M27	Side panel mounted to the left	✓	✓
M54	Degree of protection IP54 (includes **M60**)	✓	✓
M60	Additional touch protection	–	✓
M61	Comfort-grip handle with a 3 mm double-bit lock insert	✓	✓
M62	Comfort-grip handle with integrated pushbutton lock insert	✓	✓
M63	Comfort-grip handle for a padlock with pushbutton as lock insert	✓	✓
M70	EMC shield bus (already included in the Cabinet Module)	✓	✓
M80 ... M87	DC busbar system	✓	✓
M88	DC busbar system for line-side Cabinet Modules	✓	–
M89	Extended motor connection panel	–	✓
M90	Crane transport assembly (top-mounted)	✓	✓
M91	Marking of all control cable wire ends (including customer-specific cables)	✓	✓

✓	Option can be ordered for this Cabinet Module-2
–	Option cannot be ordered for this Cabinet Module-2

The following options specified in chapter "Cabinet Modules" and in SiePortal also apply for the Active Line Connection Modules-2 and Motor Modules in chassis-2 format for:

- Production flowcharts (**B43** to **B45**)
- Packaging options (**B55** to **B57**)
- Documentation (**D00**, **D01**, **D02**, **D14**, **D56**, **D58**, **D60**, **D72**, **D74**, **D77**, **D78**, **D80**, **D84**, **D91**, **D93**, **D94**)
- Labels (**T58**, **T60**, **T80**, **T83**, **T85**, **T91**, **Y31** to **Y33**)
- Converter acceptance (**F03**, **F71**, **F72**, **F74**, **F75**, **F76**, **F77**, **F97**)

The criteria for selecting various options (selection matrix) listed in Section "Cabinet Modules" in the D 21.3 catalog must also be observed.

Options

The option described below is new for SINAMICS S120 Cabinet Modules-2.

M89
Extended motor connection panel

With the selection of option **M89**, the motor cables are not directly connected to the Motor Module in chassis-2 format, but to prefabricated copper busbars in the Cabinet Module. The copper busbars make the contact to the Motor Module and can be easily separated by removing screws.
As a consequence, the Motor Module can be simply disconnected from the motor cables. This simplifies installation and cable connection. For example, this means that the Motor Module can be removed from the cabinet to make it simpler to connect the motor cables.

© Siemens 2024

Overview

Just like the SINAMICS S120 buit-in units, SINAMICS S120 Cabinet Modules-2 form a modular drive system that consists of various intelligent Drive Objects such as Line Modules, Motor Modules, Control Units, Sensor Modules, etc.

As a consequence, SINAMICS S120 Cabinet Modules-2 are supplied with documentation that only includes and describes the individual Cabinet Modules
(circuit diagram, layout diagram, terminal diagram and additional Operating Instructions).

By selecting option **Y11**, individual Cabinet Modules are assembled at the factory as interconnected units for transport and are then supplied as such.

Detailed documentation showing features such as the signal connections between the individual Cabinet Modules that make up the order, is not included in the normal scope of supply.

In this case, only a collection of the individual documents are shipped with the converter.

If the documentation is to include a complete representation of the equipment supplied, the equipment and documentation must be additionally processed. This can be ordered with the integration engineering.

Integration engineering includes the following:

- Checking the combinations and options ordered, in relation to the device configurations
- Defining how the individual drive objects are to be connected and coordinated, with the customer if required.
- Checking the performance of the ordered CompactFlash card
- Installing the required DRIVE-CLiQ cables within the transport units.
  Cables between the transport units are connected at one end
- Higher-level documentation of the scope of supply (layout diagram, circuit diagram, terminal diagram, dimension drawing, spare parts list).
- Summary of the individual documents included in a shipment, in conjunction with a delivery address separate from the equipment
- Customer-specific system and location designations, coordinated with the customer

Selection and ordering data

The following engineering services can be ordered depending on the number of drives/axes included in an order:

Integration engineering	Article No.
For 1 drive (also parallel connection) including the associated Line Modules, Sensor Modules, Terminal Modules, etc.	**6SL3780-0AA00-0AA0**
For up to 3 drives (also parallel connection) including the associated Line Modules, Sensor Modules, Terminal Modules, etc.	**6SL3780-0AC00-0AA0**
For up to 5 drives (also parallel connection) including the associated Line Modules, Sensor Modules, Terminal Modules, etc.	**6SL3780-0AE00-0AA0**
For up to 10 drives (also parallel connection) including the associated Line Modules, Sensor Modules, Terminal Modules, etc.	**6SL3780-0AJ00-0AA0**

Engineering services for larger drive systems are also available on request.

© Siemens 2024

Options

The table below lists the options available for order-specific integration engineering (for details, see Description of the options):

Available options	Order code
Customer documentation (circuit diagram, layout diagram, dimension drawing, spare parts list) in EPLAN format.	**D01**
Customer documentation (circuit diagram, terminal diagram, layout diagram) in DXF format	**D02**
Preliminary version of customer documentation in PDF format	**D14**
Documentation as language package	
Documentation in English/French	**D58**
Documentation in English/Spanish	**D60**
Documentation in English/German (standard, if no documentation option is ordered)	**D74**
Documentation in English/Italian	**D80**
Documentation in English/Chinese	**D91**
Documentation in English/Portuguese (Brazil)	**D93**
Documentation in English/Russian	**D94**
Additional documentation in a single language	
Documentation in German	**D00**
Documentation in Russian	**D56**
Documentation in Italian	**D72**
Documentation in French	**D77**
Documentation in Spanish	**D78**
Documentation in Chinese	**D84**

When ordering the order-specific integration engineering, the required documentation options must always be ordered together with the order engineering (not with the individual Cabinet Modules).

Ordering the documentation options for the particular Cabinet Modules is only required if equipment is ordered without integration engineering.

Option selection matrix of the order-specific integration engineering

Certain options are mutually exclusive.

✓	Possible combination
–	Combination not possible

	D00	D01	D02	D14	D56	D58	D60	D72	D77	D78	D80	D84	D91	D93	D94
D00		✓	✓	✓	✓	✓	✓	✓	✓	✓	✓	✓	✓	✓	✓
D01	✓		✓	–	✓	✓	✓	✓	✓	✓	✓	✓	✓	✓	✓
D02	✓	✓		✓	✓	✓	✓	✓	✓	✓	✓	✓	✓	✓	✓
D14	✓	–	✓		✓	✓	✓	✓	✓	✓	✓	✓	✓	✓	✓
D56	✓	✓	✓	✓		✓	✓	✓	✓	✓	✓	✓	✓	✓	–
D58	✓	✓	✓	✓	✓		–	–	–	–	–	✓	–	–	–
D60	✓	✓	✓	✓	✓	–		✓	✓	–	–	✓	–	–	–
D72	✓	✓	✓	✓	✓	✓	✓		✓	✓	–	✓	✓	✓	✓
D77	✓	✓	✓	✓	✓	–	✓	✓		✓	✓	✓	✓	✓	✓
D78	✓	✓	✓	✓	✓	✓	–	✓	✓		✓	✓	✓	✓	✓
D80	✓	✓	✓	✓	✓	–	–	–	✓	✓		✓	–	–	–
D84	✓	✓	✓	✓	✓	✓	✓	✓	✓	✓	✓		–	✓	✓
D91	✓	✓	✓	✓	✓	–	–	✓	✓	✓	–	–		–	–
D93	✓	✓	✓	✓	✓	–	–	✓	✓	✓	–	✓	–		–
D94	✓	✓	✓	✓	–	–	–	✓	✓	✓	–	✓	–	–	

© Siemens 2024

More information

Customized solutions

In addition to the wide range of possibilities of configuring drives with the available modules and options to address specific plant and system requirements, for special applications we also offer customized applications to fully comply with the actual requirements.

These are based on the standard SINAMICS S120 Cabinet Modules-2 and are supplied as completely wired units that are ready to be connected up.

Simply contact us if you are interested or require these or any other applications.

Notes regarding the addresses of contact persons are provided in the section "Services and Documentation" under "Partners at Siemens".

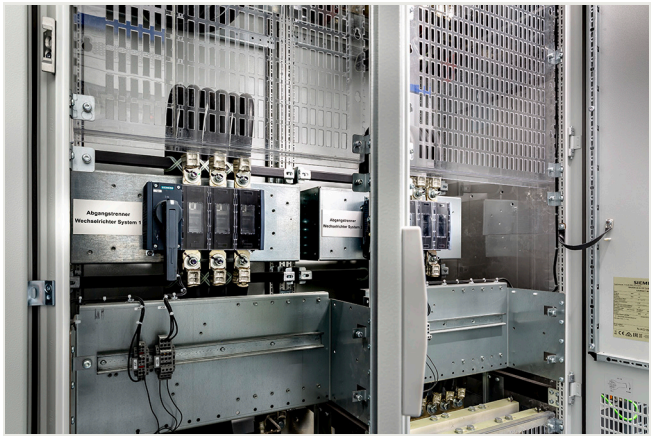

Sonntagskogelbahn Austria

© Siemens 2024

Notes

© Siemens 2024

8/2 SINAMICS S150 converter cabinet units
8/2 Overview
8/2 Benefits
8/3 Application
8/3 Selection and ordering data
8/4 Design
8/6 Function
8/8 Technical specifications
8/15 Characteristic curves
8/18 Options

8/22 Description of options

8/36 Line-side components – recommended fuses

8/37 Cable cross-sections and connections

8/39 Supplementary system components
8/39 Mounting device for power blocks

© Siemens 2024

Overview

SINAMICS S150 converter cabinet units are particularly suitable for all variable-speed single-axis drives with high performance requirements, i.e. drives with:

- High dynamic requirements
- Frequent braking cycles and high braking energy levels
- Four-quadrant operation

SINAMICS S150 offers high-performance speed control with excellent accuracy and a high dynamic response.

The following voltages and power ratings are available:

Line voltage	Type rating
380 ... 480 V 3 AC	110 ... 800 kW
500 ... 690 V 3 AC	75 ... 1200 kW

Degrees of protection are IP20 (standard) and optionally IP21, IP23, IP43 and IP54.

Line and motor-side components as well as additional monitoring devices can be installed in the converter cabinet units.

A wide range of electrical and mechanical components enable the drive system to be optimized individually to suit customer requirements.

Benefits

The self-commutating, pulsed infeed/regenerative unit uses IGBT technology and is equipped with a Clean Power Filter. This combination guarantees extremely line-friendly behavior which is characterized by the following:

- Negligible line harmonics as a result of the Clean Power Filter (<<1 %)
- The stringent limit values of IEEE 519 (2014) are typically complied with. The total harmonic distortion factors of the current THD(I) and voltage THD(U) are typically in the range of approx. 3 % for rated current. THD(I) is calculated according to IEE 519 (2014) and THD(U) according to IEC 61000-2-4 (2002).
- Regenerative feedback (four-quadrant operation)
- Tolerant to fluctuations in the line voltage
- Operation on weak line supplies
- Reactive power compensation is possible (inductive or capacitive)
- High drive dynamic performance

In addition, factors have been considered to ensure easy handling of the drive from the planning and design phase through to operation. These factors include:

- Compact, modular design with an optimum degree of service friendliness
- Straightforward configuring and commissioning thanks to assistance provided by the SIZER for Siemens Drives (integrated in the TIA Selection Tool), Startdrive and STARTER tools
- Simple installation, as it is ready to be connected up
- Fast, menu-prompted commissioning with no complex parameterization
- Clear and convenient drive monitoring/diagnostics, commissioning and operation via a user-friendly graphical operator panel with measured values displayed in plain text or in a quasi-analog bar display.
- SINAMICS as an integral part of Totally Integrated Automation (TIA). The TIA concept offers an optimized range of products for automation and drive technology. This concept is characterized by configuration, communication, and data management that are consistent throughout the product range. SINAMICS is fully integrated in the TIA concept. Separate S7/PCS7 blocks and faceplates for WinCC are available.
- Integration in SIMATIC H systems via Y-Link
- SINAMICS Drive Control Chart (SINAMICS DCC)
  SINAMICS DCC is an additional tool for the easy configuration of process-oriented functions for SINAMICS. The block library encompasses a large selection of closed-loop, arithmetic and logic blocks, as well as a more comprehensive range of open-loop and closed-loop control functions. The user-friendly DCC editor enables easy graphics-based configuration, allows control loop structures to be clearly represented and provides a high degree of reusability of charts that have already been created. SINAMICS DCC is an add-on to the commissioning tools SINAMICS Startdrive or STARTER.

© Siemens 2024

Application

SINAMICS S150 is especially suitable for use in all applications that place the highest demands on process operations with dynamic, reproducible processes. These include, for example:

- Test stands
- Centrifuges
- Elevators and cranes
- Cross cutters and shears
- Conveyor belts with a high power demand and energy recovery
- Presses
- Cable winches

Selection and ordering data

Type rating at 400 V or 690 V	Rated output current I_N	**SINAMICS S150 converter cabinet unit**
kW	A	Article No.
Line voltage 380 ... 480 V 3 AC		
110	210	**6SL3710-7LE32-1AA3**
132	260	**6SL3710-7LE32-6AA3**
160	310	**6SL3710-7LE33-1AA3**
200	380	**6SL3710-7LE33-8AA3**
250	490	**6SL3710-7LE35-0AA3**
315	605	**6SL3710-7LE36-1AA3**
400	745	**6SL3710-7LE37-5AA3**
450	840	**6SL3710-7LE38-4AA3**
560	985	**6SL3710-7LE41-0AA3**
710	1260	**6SL3710-7LE41-2AA3**
800	1405	**6SL3710-7LE41-4AA3**
Line voltage 500 ... 690 V 3 AC		
75	85	**6SL3710-7LG28-5AA3**
90	100	**6SL3710-7LG31-0AA3**
110	120	**6SL3710-7LG31-2AA3**
132	150	**6SL3710-7LG31-5AA3**
160	175	**6SL3710-7LG31-8AA3**
200	215	**6SL3710-7LG32-2AA3**
250	260	**6SL3710-7LG32-6AA3**
315	330	**6SL3710-7LG33-3AA3**
400	410	**6SL3710-7LG34-1AA3**
450	465	**6SL3710-7LG34-7AA3**
560	575	**6SL3710-7LG35-8AA3**
710	735	**6SL3710-7LG37-4AA3**
800	810	**6SL3710-7LG38-1AA3**
900	910	**6SL3710-7LG38-8AA3**
1000	1025	**6SL3710-7LG41-0AA3**
1200	1270	**6SL3710-7LG41-3AA3**

© Siemens 2024

Design

The SINAMICS S150 converter cabinet units are characterized by their compact, modular and service-friendly design.

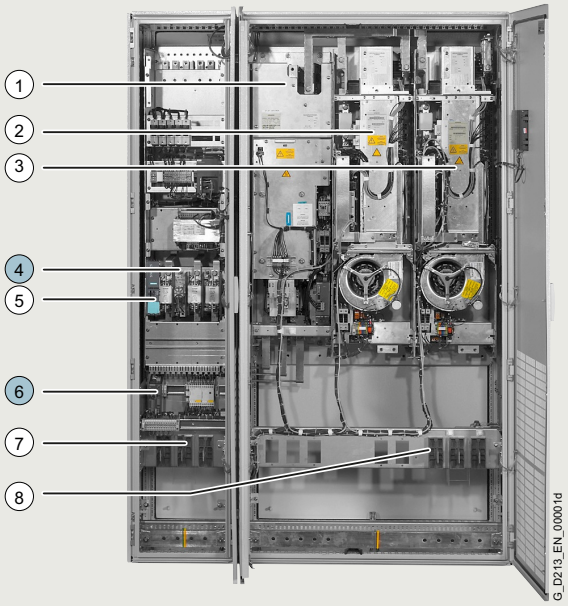

1. Active Interface Module with Clean Power Filter and main contactor
2. Active Line Module
3. Motor Module
4. Main switch with fuses (option **L26**)
5. Control Unit
6. Terminal Module TM31 (option **G60**)
7. Line connection (-X1)
8. Motor connection (-X2)

○ Standard version

● Option

Design example of a SINAMICS S150 converter cabinet unit

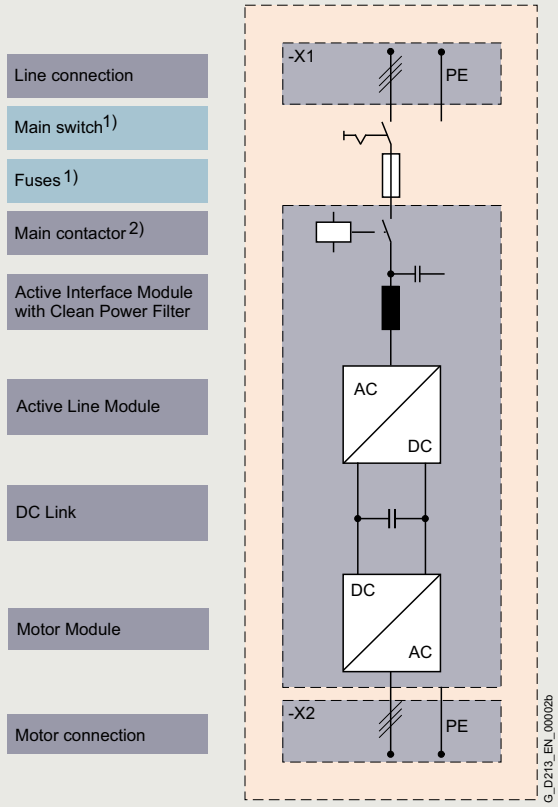

Option

1) Main switch with fuses only with output current < 800 A

2) Main contactor with output current < 800 A or circuit-breaker with output current > 800 A available as standard

Basic design of a SINAMICS S150 converter cabinet unit with a number of version-specific options

© Siemens 2024

Design

Coated modules

The following devices are equipped as standard with coated modules:

- Chassis format units
- Control Units
- Sensor Modules
- Terminal Modules
- Advanced Operator Panel (AOP30)

The coating on the modules protects the sensitive SMD components against corrosive gases, chemically active dust and moisture.

Nickel-plated busbars

All of the copper busbars used in the converter cabinets are nickel-plated in order to achieve the best possible immunity to environmental effects. Furthermore, there is no need to clean the contacts on the customer terminals as otherwise required for bare copper connections.

Note:
With some options, parts of the copper busbars cannot be nickel-plated for technical reasons.

Degrees of protection

The EN 60529 standard covers the protection of electrical equipment by means of housings, covers or equivalent, and includes:

- Protection of persons against accidental contact with live or moving parts within the housing and protection of the equipment against the ingress of solid foreign bodies (touch protection and protection against ingress of solid foreign bodies)
- Protection of the equipment against the ingress of water (water protection)
- Abbreviations for the internationally agreed degrees of protection

The degrees of protection are specified by abbreviations comprising the code letters IP and two digits.

Degree of protection	**First digit** (Touch protection and protection against foreign bodies)	**Second digit** (Protection of equipment against the ingress of water)
IP20 (Standard)	Protected against solid foreign bodies with a diameter ≥ 12.5 mm	No water protection
IP21 (Option **M21**)	Protected against solid foreign bodies with a diameter ≥ 12.5 mm	Protected against drip water Vertically falling water drops shall not have a harmful effect.
IP23 (Option **M23**)	Protected against solid foreign bodies with a diameter ≥ 12.5 mm	Protected against spray water Water sprayed on both sides of the vertical at an angle of up to 60° shall not have a harmful effect.
IP43 (Option **M43**)	Protected against solid foreign bodies with a diameter ≥ 1 mm	Protected against spray water Water sprayed on both sides of the vertical at an angle of up to 60° shall not have a harmful effect.
IP54 (Option **M54**)	Dust protected Ingress of dust is not totally prevented, but dust must not be allowed to enter in such quantities that the functioning or safety of the equipment is impaired.	Protected against splash water Water splashing onto the enclosure from any direction shall not have a harmful effect.

© Siemens 2024

Function

AOP30 Advanced Operator Panel

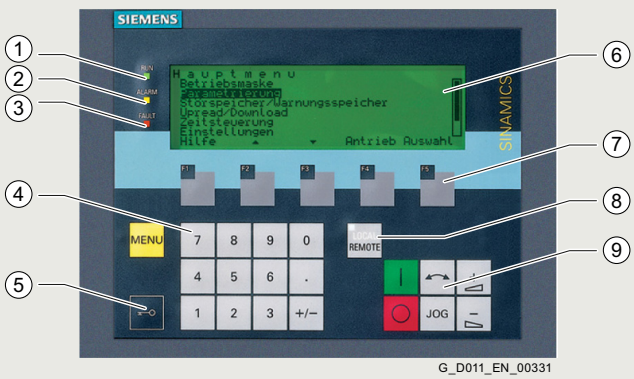

1. LED On (green)
2. LED Alarm (yellow)
3. LED Fault (red)
4. Numeric keypad
5. Keypad disable
6. Display
7. Function keys F1 to F5
8. Selection of local/remote command priority
9. Keypad for drive control

An Advanced Operator Panel (AOP30) is installed in the cabinet door of the converter for operation, monitoring and commissioning tasks.

The user is guided by interactive menus through the drive commissioning screens. When the drive is commissioned for the first time, only 6 motor parameters (which can be found on the motor rating plate) have to be entered on the AOP30.
The closed-loop control is then optimized automatically to adapt the converter to the motor.

The AOP30's two-stage safety concept prevents unintentional or unauthorized changes to settings. Operation of the drive from the operator panel can be disabled by the keyboard lock and so that only parameter values and process variables can be displayed on the operator panel. The OFF key is factory-set to "active", but can be deactivated by the customer. A password can be used to prevent the unauthorized changing of converter parameters.

German, English, French, Italian, Spanish and Chinese are stored on the CU320-2 Control Unit CompactFlash card as operator panel languages. The desired language must be downloaded to the AOP30 prior to commissioning. In addition to these standard operator panel languages, Russian can also be retro-installed. Further languages are available on request.

Examples of plain-text displays during various phases of operation are shown below.

The **first commissioning** is performed via the operator panel.

```
Service / Commissioning
Drive commissioning
Device commissioning
AOP   settings
AOP   diagnostics
Help                ▼        Back      Select
```

Only 6 motor parameters have to be entered: Power, speed, current, cos φ, voltage and frequency of the motor.

This information can be found on the motor rating plate, and must be entered in the screens on the display by following a short, menu-assisted procedure. The motor cooling method must also be specified.

```
Motor data
Back
p0304   MOT.U_rated        400.0 V
p0305   MOT. I_rated       405.0 A
p0307   MOT.P_rated        235.0 kW
p0308   MOT.CosPhi_rated   0.870
Help          ▲      ▼      Change      OK
```

The next screen contains the parameter values that are used to automatically optimize the control.

```
Basic commissioning
Back
p0700   Default BI          S/G150   TM 31
p1000   Default DI n_set    TM 31    AIO
p1080   Minimum speed       0.000    rpm
p1082   Maximum speed       1500.000 rpm
Help          ▲      ▼      Change   Further
```

During operation, the display shows current data, such as setpoints and actual values as absolute values or it is possible to parameterize up to 3 process variables as a quasi-analog bar display.

```
Operation  →                12:25:30
Nset   1450.00  rpm   Nact   1450.0 rpm
Fout     48.50  Hz    Vout   385.3 V
M        2700   Nm    Imot   748    A
Pact     410    kW
Nact:
1450 rpm   0%          50          100%
```

```
Operation  →                12:25:30
Nset   1465.50  rpm   Pact   410    kW
Fout     48.50  Hz    Vout   385.3  V
Imot
748 A      0%          50          100%
Nact
1465 rpm   0%          50          100%
```

Any **alarms** that occur are signaled by flashing of the yellow ALARM LED, **faults** by the red FAULT LED, which is then lit. There is also an indication of the cause displayed in plain text on the display's status line (with counter/remedial measures).

```
(3 : Vector) Current fault in

F 07901 Motor overspeed

Help          ▲      Alt      Back      Ack.
```

```
Motor overspeed
Fault val = 000000007   00000007 (hex)
Cause:
The maximum permissible positive or
negative speed has been exceeded.
The maximum permissible positive speed
is calculated as follows:
Back
              ▲      ▼
```

© Siemens 2024

Function

Communication with higher-level controller and customer terminal strip

A PROFIBUS or PROFINET interface on the Control Unit CU320-2 is provided as standard as the customer control interface.

This interface can be used to connect the system to the higher-level controller using analog and digital signals, or to connect additional units.

The inputs and outputs available as standard can be optionally expanded by up to two Terminal Modules TM31 (refer to the description of options, option G60 or G61). To simplify configuration and commissioning of the drive, the TM31 Terminal Module can be preset to a variety of factory settings.

For additional information, please refer to the SINAMICS Low Voltage Engineering Manual.

Open-loop and closed-loop control functions

SINAMICS S150 has a high-dynamic vector control with speed and current control – with and without speed actual value feedback.

Software and protective functions

The software functions available as standard are described below:

Software and protective functions	Description
Setpoint input	The setpoint can be specified both internally and externally; internally as a fixed setpoint, motorized potentiometer setpoint or jog setpoint, externally via the communications interface or an analog input. The internal fixed setpoint and the motorized potentiometer setpoint can be switched or adjusted via control commands from any interface.
Motor identification	The automatic motor identification function makes commissioning faster and easier and optimizes closed-loop control of the drive.
Ramp-function generator	A user-friendly ramp-function generator with separately adjustable ramp-up and ramp-down times, together with adjustable rounding times in the lower and upper speed ranges, allows the drive to be smoothly accelerated and braked. This results in a good speed control response and plays its role in reducing the stress on the mechanical system. The down ramps can be parameterized separately for quick stop.
$V_{dc\ max}$ controller	The $V_{dc\ max}$ controller automatically prevents overvoltages in the DC link, if the set down ramp is too short, for example. This may also extend the set ramp-down time.
Kinetic buffering (KIP)	For brief line supply failures, the kinetic energy of the rotating drive is used to buffer the DC link and therefore prevents fault trips. The converter remains operational as long as the drive can provide regenerative energy as a result of its motion and the DC link voltage does not drop below the shutdown threshold. When the line supply recovers within this time, the drive is again bumplessly accelerated up to its setpoint speed.
Automatic restart	The automatic restart switches the drive on again when the power is restored after a power failure, and ramps up to the current speed setpoint.
Flying restart	The flying restart function allows the converter to be switched to a motor that is still turning. With the voltage sensing capability provided by the optional VSM10, the flying restart time for large induction motors can be significantly reduced because the motor does not need to be de-magnetized.
Technology controller	The technology controller function module allows simple control functions to be implemented, e.g. level control or volumetric flow control and complex tension controls. The existing D component can act both on the system deviation as well as on the actual value (factory setting). The P, I, and D components are set separately.
Free function blocks (FFB)	Using the freely programmable function blocks, it is easy to implement logic and arithmetic functions for controlling the SINAMICS drive. The blocks can be programmed at the operator panel or the commissioning tools SINAMICS Startdrive or STARTER.
SINAMICS Drive Control Chart (SINAMICS DCC)	SINAMICS DCC is an additional tool for the easy configuration of technological functions for SINAMICS. The block library contains a large selection of control, arithmetic and logic blocks as well as extensive open-loop and closed-loop control functions. The user-friendly DCC editor enables easy graphics-based configuration, allows control loop structures to be clearly represented and provides a high degree of reusability of charts that have already been created. SINAMICS DCC is an add-on to the commissioning tools SINAMICS Startdrive or STARTER (→ Tools and Engineering).
SINAMICS Technology Extensions (SINAMICS TEC)	The SINAMICS TEC are configurable functions or Siemens technologies that can be added to extend firmware functions. These extensions are designed to allow implementation of highly complex, application-specific tasks for various sectors - such as storage and retrieval machines. Additional information about Technology Extensions (TEC) is provided in the "Technology functions" section.
I^2t sensing for motor protection	A motor model stored in the converter software calculates the motor temperature based on the current speed and load. More exact sensing of the temperature, which also takes into account the influence of the ambient temperature, is possible by means of direct temperature sensing using Pt1000/KTY84 sensors in the motor winding.
Motor temperature evaluation	Motor protection by evaluating a KTY84, PTC, Pt100 or Pt1000 temperature sensor. When a KTY84 temperature sensor is connected, the limit values can be set for alarm or shutdown. When a PTC thermistor is connected, the system reaction to triggering of the thermistor (alarm or trip) can be defined.
Motor blocking protection	A blocked motor is detected and protected against thermal overloading by a fault trip.
Brake control	"Simple brake control" for control of holding brakes: The holding brake is used to secure drives against unwanted motion when deactivated. "Extended brake control" function module for complex brake control, e.g. for motor holding brakes and operational brakes: When braking with a feedback signal, the brake control reacts to the feedback signal contacts of the brake.
Essential service mode	Special converter operating mode that increases the availability of the drive system, e.g. in the event of a fire.
Write protection	Write protection to prevent unintentional changing of the setting parameters (without password function).
Know-how protection	Know-how protection for encrypting stored data, e.g. to protect configuration know-how, and to protect against changes and duplication (with password function).
Web server	The web server provides information about the drive unit via its web pages. The web server is accessed using an internet browser via unsecured (http) or secured transmission (https).

© Siemens 2024

Function

Power unit protection

Power unit protection	Description
Ground fault monitoring at the output	A ground fault at the output is detected by a total current monitor and results in shutdown in grounded systems.
Electronic short-circuit protection at the output	A short-circuit at the output (e.g. at the converter output terminals, in the motor cable or in the motor terminal box) is detected and the converter shuts down with a "fault".
Thermal overload protection	An alarm is issued first when the overtemperature threshold responds. If the temperature continues to rise, the unit either shuts down or independently adjusts the pulse frequency or output current so that thermal load is reduced. Once the cause of the fault has been eliminated (e.g. cooling has been improved), the original operating values are automatically resumed.

Technical specifications

The most important directives and standards are listed below. These are used as basis for the SINAMICS S150 converter cabinet units and they must be carefully observed to achieve an EMC-compliant configuration that is safe both functionally and in operation.

European directives	
2014/35/EU	Low-voltage Directive: Directive of the European Parliament and Council of February 26, 2014 for the harmonization of the laws of the member states relating to the provision of electrical equipment designed for use within certain voltage limits on the market (recast)
2014/30/EU	EMC Directive: Directive of the European Parliament and Council of February 26, 2014 on the harmonization of the laws of the member states relating to electromagnetic compatibility (recast)
2006/42/EC	Machinery Directive: Directive of the European Parliament and Council of May 17, 2006, on machinery and amending Directive 95/16/EC (recast).
2011/65/EU	RoHS II Directive: Directive of the European Parliament and of the Council of 8 June 2011 on the restriction of the use of certain hazardous substances in electrical and electronic equipment (recast)
European standards	
EN ISO 3744	Acoustics – Determination of the sound power level and sound energy level for noise sources that result from sound pressure measurements – envelope surface procedure of the accuracy class 2 for a largely free sound field over a reflecting plane
EN ISO 13849-1	Safety of machinery – Safety-related parts of control systems; Part 1: General principles for design (EN ISO 13849-1: 2006)
EN 60146-1-1	Semiconductor converters – General requirements and line-commutated converters Part 1-1: Specification of basic requirements
EN 60204-1	Safety of machinery – Electrical equipment of machines; Part 1: General requirements
EN 60529	Degrees of protection provided by enclosures (IP code)
IEC 61508-1	Functional safety of electrical/electronic/programmable electronic safety-related systems Part 1: General requirements
IEC 61508-2	Functional safety of electrical/electronic/programmable electronic safety-related systems Part 2: Requirements for electrical/electronic/programmable electronic safety-related systems
IEC 61508-3	Functional safety of electrical/electronic/programmable electronic safety-related systems Part 3: Software requirements
EN 61800-2	Adjustable speed electrical power drive systems Part 2: General requirements – rating specifications for low voltage adjustable frequency AC power drive systems
EN 61800-3	Adjustable speed electrical power drive systems Part 3: EMC requirements and specific test methods
EN 61800-5-1	Adjustable speed electrical power drive systems Part 5: Safety requirements Main section 1: Electrical and thermal requirements
EN 61800-5-2	Adjustable speed electrical power drive systems Part 5-2: Safety requirements – Functional safety (IEC 61800-5-2: 2007)

© Siemens 2024

Technical specifications

General technical specifications

Electrical specifications	
Line voltages	380 … 480 V 3 AC, ±10 % (-15 % <1 min) 500 … 690 V 3 AC, ±10 % (-15 % <1 min)
Line supply types	Grounded TN/TT systems and non-grounded IT systems
Line frequency	47 ... 63 Hz
Output frequency [1]	0 ... 550 Hz
Line power factor	Adjustable (factory-set to cos φ = 1)
Efficiency	>96 %
Overvoltage category	III acc. to EN 61800-5-1
Control method	Vector control with and without encoder or V/f control
Fixed speeds	15 fixed speeds plus 1 minimum speed, parameterizable (in the default setting, 3 fixed setpoints plus 1 minimum speed are selectable using terminal strip/PROFIBUS/PROFINET)
Skippable speed ranges	4, parameterizable
Setpoint resolution	0.001 r/min digital (14 bits + sign) 12 bits analog
Braking operation	Four-quadrant operation is possible as standard (optional via a braking unit if braking is required when power fails)

Mechanical specifications	
Degree of protection	IP20 (higher degrees of protection up to IP54 optional)
Protection class	I acc. to EN 61800-5-1
Touch protection	EN 50274/DGUV regulation 3 when used as intended
Cabinet system	Rittal TS 8, doors with double-bit key, three-section base plates for cable entry
Paint finish	RAL 7035 (indoor requirements)
Cooling method	Forced air cooling AF according to EN 60146

Ambient conditions	Storage [2]	Transport [2]	Operation
Ambient temperature	-25 ... +55 °C (-13 ... +131 °F)	-25 ... +70 °C (-13 ... +158 °F) from -40 °C (-40 °F) for 24 hours	0 ... 40 °C (32 ... +104 °F) to +50 °C (+122 °F), see derating data
Relative humidity (condensation not permissible)	5 ... 95% Class 1K4 acc. to IEC 60721-3-1 (1997)	5 ... 95 % at 40 °C (104 °F) Class 2K3 acc. to IEC 60721-3-2 (1997)	5 ... 95 % Class 3K3 acc. to IEC 60721-3-3 (2002)
Environmental class/ harmful chemical substances	Class 1C2 acc. to IEC 60721-3-1 (1997)	Class 2C2 acc. to IEC 60721-3-2 (1997)	Class 3C2 acc. to IEC 60721-3-3 (2002)
Organic/biological influences	Class 1B1 acc. to IEC 60721-3-1 (1997)	Class 2B1 acc. to IEC 60721-3-2 (1997)	Class 3B1 acc. to IEC 60721-3-3 (2002)
Mechanically active substances	Class 1S1 acc. to IEC 60721-3-1 (1997)	Class 2S1 acc. to IEC 60721-3-2 (1997)	Class 3S1 acc. to IEC 60721-3-3 (2002)
Degree of pollution	2 acc. to EN 61800-5-1		
Installation altitude	Up to 2000 m (6562 ft) above sea level without derating; > 2000 m (6562 ft) see derating data		

Mechanical stability	Storage [2]	Transport [2]	Operation
Vibratory load	Class 1M2 acc. to IEC 60721-3-1 (1997)	Class 2M2 acc. to IEC 60721-3-2 (1997)	–
• Deflection	1.5 mm (0.06 in) at 5 ... 9 Hz	3.1 mm (0.12 in) at 5 ... 9 Hz	0.075 mm (0.003 in) at 10 ... 58 Hz
• Acceleration	5 m/s² (16.4 ft/s²) at >9 ... 200 Hz	10 m/s² (32.8 ft/s²) at 9 ... 200 Hz	9.8 m/s² (32.2 ft/s²) at 58 ... 200 Hz
Shock load	Class 1M2 acc. to IEC 60721-3-1 (1997)	Class 2M2 acc. to IEC 60721-3-2 (1997)	Class 3M1 acc. to EN 60721-3-3 (2002)
• Acceleration	40 m/s² (131 ft/s²) at 22 ms	100 m/s² (328 ft/s²) at 11 ms	Test values acc. to EN 60068-2-27 test Ea: 5 g, 30 ms, 3 shocks

Compliance with standards	
Conformances/certificates of suitability, according to	CE (EMC Directive 2014/30/EU and Machinery Directive 2006/42/EC for functional safety) RCM, RoHS II, UKCA
Radio interference suppression	SINAMICS converter systems are not designed for connection to the public grid (first environment). Radio interference suppression is compliant with the EMC product standard for variable-speed drives EN 61800-3, "Second environment" (industrial networks). EMC disturbances can occur when connected to the public grid. However, if additional measures are taken (e.g. → line filter), it can also be operated in the "first environment".

Deviations from the specified classes are underlined.

[1] Please note:
- The correlation between the maximum output frequency, pulse frequency and current derating. Higher output frequencies on request.
- The correlation between the maximum output frequency and permissible output current (current derating).

For additional information, please refer to the SINAMICS Low Voltage Engineering Manual.

[2] In transport packaging.

© Siemens 2024

Technical specifications

Line voltage 380 ... 480 V 3 AC		SINAMICS S150 converter cabinet units					
		6SL3710-7LE32-1AA3	6SL3710-7LE32-6AA3	6SL3710-7LE33-1AA3	6SL3710-7LE33-8AA3	6SL3710-7LE35-0AA3	6SL3710-7LE36-1AA3
Type rating							
• At I_L (50 Hz 400 V) [1]	kW	**110**	**132**	**160**	**200**	**250**	**315**
• At I_H (50 Hz 400 V) [1]	kW	90	110	132	160	200	250
• At I_L (60 Hz 460 V) [2]	hp	150	200	250	300	400	500
• At I_H (60 Hz 460 V) [2]	hp	150	200	200	250	350	350
Output current							
• Rated current $I_{N\,O}$	A	210	260	310	380	490	605
• Base-load current I_L [3]	A	205	250	302	370	477	590
• Base-load current I_H [4]	A	178	233	277	340	438	460
• Maximum current $I_{max\,O}$	A	307	375	453	555	715	885
Infeed/regenerative feedback current							
• Rated current $I_{N\,I}$	A	197	242	286	349	447	549
• Maximum current $I_{max\,I}$	A	315	390	570	570	735	907
Current demand, max. [5]							
• 24 V DC aux. power supply	A	Internal	Internal	Internal	Internal	Internal	Internal
Pulse frequency [6]							
• Rated frequency	kHz	2	2	2	2	2	1.25
• Pulse frequency, max.							
- Without current derating	kHz	2	2	2	2	2	1.25
- With current derating	kHz	8	8	8	8	8	8
Power loss, max. [7]							
• At 50 Hz 400 V	kW	6.31	7.55	10.01	10.72	13.13	17.69
• At 60 Hz 460 V	kW	6.49	7.85	10.45	11.15	13.65	18.55
Cooling air requirement	m^3/s (ft^3/s)	0.58 (20.5)	0.7 (24.7)	1.19 (42.0)	1.19 (42.0)	1.19 (42.0)	1.96 (69.2)
Sound pressure level L_{pA} (1 m) at 50/60 Hz	dB	71/73	71/73	72/74	72/74	72/74	77/79
Cable length, max.							
• Shielded	m (ft)	300 (984)	300 (984)	300 (984)	300 (984)	300 (984)	300 (984)
• Unshielded	m (ft)	450 (1476)	450 (1476)	450 (1476)	450 (1476)	450 (1476)	450 (1476)
Degree of protection		IP20	IP20	IP20	IP20	IP20	IP20
Dimensions							
• Width	mm (in)	1400 (55.1)	1400 (55.1)	1600 (63.0)	1800 (70.9)	1800 (70.9)	2200 (86.6)
• Height	mm (in)	2000 (78.7)	2000 (78.7)	2000 (78.7)	2000 (78.7)	2000 (78.7)	2000 (78.7)
• Depth	mm (in)	600 (23.6)	600 (23.6)	600 (23.6)	600 (23.6)	600 (23.6)	600 (23.6)
Weight (without options), approx.	kg (lb)	708 (1561)	708 (1561)	892 (1967)	980 (2161)	980 (2161)	1716 (3783)
Rated short-circuit current according to IEC [8]	kA	65	65	65	50	50	50
Minimum short-circuit current [9]	kA	3	3	4.5	4.5	8	12
Frame sizes							
• Active Interface Module		FI	FI	GI	GI	GI	HI
• Active Line Module		FX	FX	GX	GX	GX	HX
• Motor Module		FX	FX	GX	GX	GX	HX

Note:
The power data in hp units is based on the NEC/CEC standards for the North American market.
Information about line supply connections, motor connections and cabinet grounding can be found under **Cable cross-sections and connections**.

[1] Rated power of a typical 6-pole standard induction motor based on I_L or I_H for 400 V 3 AC 50 Hz.

[2] Rated power of a typical 6-pole standard induction motor based on I_L or I_H for 460 V 3 AC 60 Hz.

[3] The base-load current I_L is based on a duty cycle of 110 % for 60 s or 150 % for 10 s with a duty cycle duration of 300 s.

[4] The base-load current I_H is based on a duty cycle of 150 % for 60 s or 160 % for 10 s with a duty cycle duration of 300 s.

[5] If the drive closed-loop control is still to remain active when the line supply fails, the equipment must be provided with an external 24 V DC supply.

[6] Information regarding the correlation between the pulse frequency and max. output current/output frequency is provided in the SINAMICS Low Voltage Engineering Manual.

[7] The specified power losses are the maximum values at 100 % utilization. The values are lower under normal operating conditions.

[8] In conjunction with the specified fuses or circuit breakers.

[9] Current required for reliably triggering protective devices.

© Siemens 2024

Technical specifications

Line voltage 380 ... 480 V 3 AC		SINAMICS S150 converter cabinet units				
		6SL3710-7LE37-5AA3	6SL3710-7LE38-4AA3	6SL3710-7LE41-0AA3	6SL3710-7LE41-2AA3	6SL3710-7LE41-4AA3
Type rating						
• At I_L (50 Hz 400 V) [1]	kW	**400**	**450**	**560**	**710**	**800**
• At I_H (50 Hz 400 V) [1]	kW	315	400	450	560	710
• At I_L (60 Hz 460 V) [2]	hp	600	700	800	900	1150
• At I_H (60 Hz 460 V) [2]	hp	450	600	700	900	1000
Output current						
• Rated current $I_{N\,O}$	A	745	840	985	1260	1405
• Base-load current I_L [3]	A	725	820	960	1230	1370
• Base-load current I_H [4]	A	570	700	860	1127	1257
• Maximum current $I_{max\,O}$	A	1087	1230	1440	1845	2055
Infeed/regenerative feedback current						
• Rated current $I_{N\,I}$	A	674	759	888	1133	1262
• Maximum current $I_{max\,I}$	A	1118	1260	1477	1891	2107
Current demand, max. [5]						
• 24 V DC aux. power supply	A	Internal	Internal	Internal	Internal	Internal
Pulse frequency [6]						
• Rated frequency	kHz	1.25	1.25	1.25	1.25	1.25
• Pulse frequency, max.						
- Without current derating	kHz	1.25	1.25	1.25	1.25	1.25
- With current derating	kHz	8	8	8	8	8
Power loss, max. [7]						
• At 50 Hz 400 V	kW	20.63	21.1	27.25	33.05	33.95
• At 60 Hz 460 V	kW	21.75	22.25	28.65	34.85	35.85
Cooling air requirement	m^3/s (ft^3/s)	1.96 (69.2)	1.96 (69.2)	2.6 (91.8)	2.6 (91.8)	2.6 (91.8)
Sound pressure level L_{pA} (1 m) at 50/60 Hz	dB	77/79	77/79	77/79	78/80	78/80
Cable length, max.						
• Shielded	m (ft)	300 (984)	300 (984)	300 (984)	300 (984)	300 (984)
• Unshielded	m (ft)	450 (1476)	450 (1476)	450 (1476)	450 (1476)	450 (1476)
Degree of protection		IP20	IP20	IP20	IP20	IP20
Dimensions						
• Width	mm (in)	2200 (86.6)	2200 (86.6)	2800 (110)	2800 (110)	2800 (110)
• Height	mm (in)	2000 (78.7)	2000 (78.7)	2000 (78.7)	2000 (78.7)	2000 (78.7)
• Depth	mm (in)	600 (23.6)	600 (23.6)	600 (23.6)	600 (23.6)	600 (23.6)
Weight (without options), approx.	kg (lb)	1731 (3816)	1778 (3920)	2408 (5309)	2408 (5309)	2408 (5309)
Rated short-circuit current according to IEC [8]	kA	50	55	55	55	55
Minimum short-circuit current [9]	kA	15	2	2.5	3.2	3.2
Frame sizes						
• Active Interface Module		HI	HI	JI	JI	JI
• Active Line Module		HX	HX	JX	JX	JX
• Motor Module		HX	HX	JX	JX	JX

Note:
The power data in hp units is based on the NEC/CEC standards for the North American market.
Information about line supply connections, motor connections and cabinet grounding can be found under **Cable cross-sections and connections**.

[1] Rated power of a typical 6-pole standard induction motor based on I_L or I_H for 400 V 3 AC 50 Hz.

[2] Rated power of a typical 6-pole standard induction motor based on I_L or I_H for 460 V 3 AC 60 Hz.

[3] The base-load current I_L is based on a duty cycle of 110 % for 60 s or 150 % for 10 s with a duty cycle duration of 300 s.

[4] The base-load current I_H is based on a duty cycle of 150 % for 60 s or 160 % for 10 s with a duty cycle duration of 300 s.

[5] If the drive closed-loop control is still to remain active when the line supply fails, the equipment must be provided with an external 24 V DC supply.

[6] Information regarding the correlation between the pulse frequency and max. output current/output frequency is provided in the SINAMICS Low Voltage Engineering Manual.

[7] The specified power losses are the maximum values at 100 % utilization. The values are lower under normal operating conditions.

[8] In conjunction with the specified fuses or circuit breakers.

[9] Current required for reliably triggering protective devices.

© Siemens 2024

Technical specifications

Line voltage 500 ... 690 V 3 AC		SINAMICS S150 converter cabinet units					
		6SL3710-7LG28-5AA3	6SL3710-7LG31-0AA3	6SL3710-7LG31-2AA3	6SL3710-7LG31-5AA3	6SL3710-7LG31-8AA3	6SL3710-7LG32-2AA3
Type rating							
• At I_L (50 Hz 690 V) [1]	kW	**75**	**90**	**110**	**132**	**160**	**200**
• At I_H (50 Hz 690 V) [1]	kW	55	75	90	110	132	160
• At I_L (50 Hz 500 V) [1]	kW	55	55	75	90	110	132
• At I_H (50 Hz 500 V) [1]	kW	45	55	75	90	90	110
• At I_L (60 Hz 575 V) [2]	hp	75	75	100	150	150	200
• At I_H (60 Hz 575 V) [2]	hp	75	75	100	125	150	200
Output current							
• Rated current $I_{N\,O}$	A	85	100	120	150	175	215
• Base-load current I_L [3]	A	80	95	115	142	170	208
• Base-load current I_H [4]	A	76	89	117	134	157	192
• Maximum current $I_{max\,O}$	A	120	142	172	213	255	312
Infeed/regenerative feedback current							
• Rated current $I_{N\,I}$	A	86	99	117	144	166	202
• Maximum current $I_{max\,I}$	A	125	144	170	210	253	308
Current demand, max. [5]							
• 24 V DC aux. power supply	A	Internal	Internal	Internal	Internal	Internal	Internal
Pulse frequency [6]							
• Rated frequency	kHz	1.25	1.25	1.25	1.25	1.25	1.25
• Pulse frequency, max.							
- Without current derating	kHz	1.25	1.25	1.25	1.25	1.25	1.25
- With current derating	kHz	7.5	7.5	7.5	7.5	7.5	7.5
Power loss, max. [7]							
• At 50 Hz 690 V	kW	5.12	5.38	5.84	5.75	11.02	11.44
• At 60 Hz 575 V	kW	4.45	4.65	5.12	4.97	11.15	11.56
Cooling air requirement	m^3/s (ft^3/s)	0.58 (20.5)	0.58 (20.5)	0.58 (20.5)	0.58 (20.5)	1.19 (42.0)	1.19 (42.0)
Sound pressure level L_{pA} (1 m) at 50/60 Hz	dB	71/73	71/73	71/73	71/73	75/77	75/77
Cable length, max.							
• Shielded	m (ft)	300 (984)	300 (984)	300 (984)	300 (984)	300 (984)	300 (984)
• Unshielded	m (ft)	450 (1476)	450 (1476)	450 (1476)	450 (1476)	450 (1476)	450 (1476)
Degree of protection		IP20	IP20	IP20	IP20	IP20	IP20
Dimensions							
• Width	mm (in)	1400 (55.1)	1400 (55.1)	1400 (55.1)	1400 (55.1)	1600 (63.0)	1600 (63.0)
• Height	mm (in)	2000 (78.7)	2000 (78.7)	2000 (78.7)	2000 (78.7)	2000 (78.7)	2000 (78.7)
• Depth	mm (in)	600 (23.6)	600 (23.6)	600 (23.6)	600 (23.6)	600 (23.6)	600 (23.6)
Weight (without options), approx.	kg (lb)	708 (1561)	708 (1561)	708 (1561)	708 (1561)	892 (1967)	892 (1967)
Rated short-circuit current according to IEC [8]	kA	65	65	65	65	65	65
Minimum short-circuit current [9]	kA	1	1	1.3	1.8	2.5	3
Frame size							
• Active Interface Module		FI	FI	FI	FI	GI	GI
• Active Line Module		FX	FX	FX	FX	GX	GX
• Motor Module		FX	FX	FX	FX	GX	GX

Note:
The power data in hp units is based on the NEC/CEC standards for the North American market.
Information about line supply connections, motor connections and cabinet grounding can be found under **Cable cross-sections and connections**.

[1] Rated power of a typical 6-pole standard induction motor based on I_L or I_H for 400 V 3 AC 50 Hz.

[2] Rated power of a typical 6-pole standard induction motor based on I_L or I_H for 460 V 3 AC 60 Hz.

[3] The base-load current I_L is based on a duty cycle of 110 % for 60 s or 150 % for 10 s with a duty cycle duration of 300 s.

[4] The base-load current I_H is based on a duty cycle of 150 % for 60 s or 160 % for 10 s with a duty cycle duration of 300 s.

[5] If the drive closed-loop control is still to remain active when the line supply fails, the equipment must be provided with an external 24 V DC supply.

[6] Information regarding the correlation between the pulse frequency and max. output current/output frequency is provided in the SINAMICS Low Voltage Engineering Manual.

[7] The specified power losses are the maximum values at 100 % utilization. The values are lower under normal operating conditions.

[8] In conjunction with the specified fuses or circuit breakers.

[9] Current required for reliably triggering protective devices.

© Siemens 2024

Technical specifications

Line voltage 500 ... 690 V 3 AC		SINAMICS S150 converter cabinet units					
		6SL3710-7LG32-6AA3	6SL3710-7LG33-3AA3	6SL3710-7LG34-1AA3	6SL3710-7LG34-7AA3	6SL3710-7LG35-8AA3	6SL3710-7LG37-4AA3
Type rating							
• At I_L (50 Hz 690 V) [1]	kW	**250**	**315**	**400**	**450**	**560**	**710**
• At I_H (50 Hz 690 V) [1]	kW	200	250	315	400	450	630
• At I_L (50 Hz 500 V) [1]	kW	160	200	250	315	400	500
• At I_H (50 Hz 500 V) [1]	kW	132	160	200	250	315	450
• At I_L (60 Hz 575 V) [2]	hp	250	300	400	450	600	700
• At I_H (60 Hz 575 V) [2]	hp	200	250	350	450	500	700
Output current							
• Rated current $I_{N\,O}$	A	260	330	410	465	575	735
• Base-load current I_L [3]	A	250	320	400	452	560	710
• Base-load current I_H [4]	A	233	280	367	416	514	657
• Maximum current $I_{max\,O}$	A	375	480	600	678	840	1065
Infeed/regenerative feedback current							
• Rated current $I_{N\,I}$	A	242	304	375	424	522	665
• Maximum current $I_{max\,I}$	A	370	465	619	700	862	1102
Current demand, max. [5]							
• 24 V DC aux. power supply	A	Internal	Internal	Internal	Internal	Internal	Internal
Pulse frequency [6]							
• Rated frequency	kHz	1.25	1.25	1.25	1.25	1.25	1.25
• Pulse frequency, max.							
- Without current derating	kHz	1.25	1.25	1.25	1.25	1.25	1.25
- With current derating	kHz	7.5	7.5	7.5	7.5	7.5	7.5
Power loss, max. [7]							
• At 50 Hz 690 V	kW	11.97	12.69	19.98	20.55	24.05	30.25
• At 60 Hz 575 V	kW	12.03	12.63	18.86	19.47	22.85	28.75
Cooling air requirement	m^3/s (ft^3/s)	1.19 (42.0)	1.19 (42.0)	1.96 (69.2)	1.96 (69.2)	1.96 (69.2)	2.6 (91.8)
Sound pressure level L_{pA} (1 m) at 50/60 Hz	dB	75/77	75/77	77/79	77/79	77/79	77/79
Cable length, max.							
• Shielded	m (ft)	300 (984)	300 (984)	300 (984)	300 (984)	300 (984)	300 (984)
• Unshielded	m (ft)	450 (1476)	450 (1476)	450 (1476)	450 (1476)	450 (1476)	450 (1476)
Degree of protection		IP20	IP20	IP20	IP20	IP20	IP20
Dimensions							
• Width	mm (in)	1600 (63.0)	1600 (63.0)	2200 (86.6)	2200 (86.6)	2200 (86.6)	2800 (110)
• Height	mm (in)	2000 (78.7)	2000 (78.7)	2000 (78.7)	2000 (78.7)	2000 (78.7)	2000 (78.7)
• Depth	mm (in)	600 (23.6)	600 (23.6)	600 (23.6)	600 (23.6)	600 (23.6)	600 (23.6)
Weight (without options), approx.	kg (lb)	892 (1967)	892 (1967)	1716 (3783)	1716 (3783)	1716 (3783)	2300 (5071)
Rated short-circuit current according to IEC [8]	kA	65	65	50	50	50	50
Minimum short-circuit current [9]	kA	3	4.5	4.5	7	9	15
Frame size							
• Active Interface Module		GI	GI	HI	HI	HI	JI
• Active Line Module		GX	GX	HX	HX	HX	JX
• Motor Module		GX	GX	HX	HX	HX	JX

Note:
The power data in hp units is based on the NEC/CEC standards for the North American market.
Information about line supply connections, motor connections and cabinet grounding can be found under **Cable cross-sections and connections**.

[1] Rated power of a typical 6-pole standard induction motor based on I_L or I_H for 400 V 3 AC 50 Hz.

[2] Rated power of a typical 6-pole standard induction motor based on I_L or I_H for 460 V 3 AC 60 Hz.

[3] The base-load current I_L is based on a duty cycle of 110 % for 60 s or 150 % for 10 s with a duty cycle duration of 300 s.

[4] The base-load current I_H is based on a duty cycle of 150 % for 60 s or 160 % for 10 s with a duty cycle duration of 300 s.

[5] If the drive closed-loop control is still to remain active when the line supply fails, the equipment must be provided with an external 24 V DC supply.

[6] Information regarding the correlation between the pulse frequency and max. output current/output frequency is provided in the SINAMICS Low Voltage Engineering Manual.

[7] The specified power losses are the maximum values at 100 % utilization. The values are lower under normal operating conditions.

[8] In conjunction with the specified fuses or circuit breakers.

[9] Current required for reliably triggering protective devices.

© Siemens 2024

Technical specifications

Line voltage 500 ... 690 V 3 AC		SINAMICS S150 converter cabinet units			
		6SL3710-7LG38-1AA3	6SL3710-7LG38-8AA3	6SL3710-7LG41-0AA3	6SL3710-7LG41-3AA3
Type rating					
• At I_L (50 Hz 690 V) [1]	kW	**800**	**900**	**1000**	**1200**
• At I_H (50 Hz 690 V) [1]	kW	710	800	900	1000
• At I_L (50 Hz 500 V) [1]	kW	560	630	710	900
• At I_H (50 Hz 500 V) [1]	kW	500	560	630	800
• At I_L (60 Hz 575 V) [2]	hp	800	900	1000	1250
• At I_H (60 Hz 575 V) [2]	hp	700	800	900	1000
Output current					
• Rated current $I_{N\,O}$	A	810	910	1025	1270
• Base-load current I_L [3]	A	790	880	1000	1230
• Base-load current I_H [4]	A	724	814	917	1136
• Maximum current $I_{max\,O}$	A	1185	1320	1500	1845
Infeed/regenerative feedback current					
• Rated current $I_{N\,I}$	A	732	821	923	1142
• Maximum current $I_{max\,I}$	A	1218	1367	1537	1905
Current demand, max. [5]					
• 24 V DC aux. power supply	A	Internal	Internal	Internal	Internal
Pulse frequency [6]					
• Rated frequency	kHz	1.25	1.25	1.25	1.25
• Pulse frequency, max.					
- Without current derating	kHz	1.25	1.25	1.25	1.25
- With current derating	kHz	7.5	7.5	7.5	7.5
Power loss, max. [7]					
• At 50 Hz 690 V	kW	34.45	34.65	36.15	42.25
• At 60 Hz 575 V	kW	32.75	32.85	34.25	39.25
Cooling air requirement	m^3/s (ft^3/s)	2.6 (91.8)	2.6 (91.8)	2.6 (91.8)	2.6 (91.8)
Sound pressure level L_{pA} (1 m) at 50/60 Hz	dB	77/79	77/79	77/79	77/79
Cable length, max.					
• Shielded	m (ft)	300 (984)	300 (984)	300 (984)	300 (984)
• Unshielded	m (ft)	450 (1476)	450 (1476)	450 (1476)	450 (1476)
Degree of protection		IP20	IP20	IP20	IP20
Dimensions					
• Width	mm (in)	2800 (110)	2800 (110)	2800 (110)	2800 (110)
• Height	mm (in)	2000 (78.7)	2000 (78.7)	2000 (78.7)	2000 (78.7)
• Depth	mm (in)	600 (23.6)	600 (23.6)	600 (23.6)	600 (23.6)
Weight (without options), approx.	kg (lb)	2408 (5309)	2408 (5309)	2408 (5309)	2408 (5309)
Rated short-circuit current according to IEC [8]	kA	85	85	85	85
Minimum short-circuit current [9]	kA	2	2	2.5	3.2
Frame size					
• Active Interface Module		JI	JI	JI	JI
• Active Line Module		JX	JX	JX	JX
• Motor Module		JX	JX	JX	JX

Note:
The power data in hp units is based on the NEC/CEC standards for the North American market.
Information about line supply connections, motor connections and cabinet grounding can be found under **Cable cross-sections and connections**.

[1] Rated power of a typical 6-pole standard induction motor based on I_L or I_H for 400 V 3 AC 50 Hz.

[2] Rated power of a typical 6-pole standard induction motor based on I_L or I_H for 460 V 3 AC 60 Hz.

[3] The base-load current I_L is based on a duty cycle of 110 % for 60 s or 150 % for 10 s with a duty cycle duration of 300 s.

[4] The base-load current I_H is based on a duty cycle of 150 % for 60 s or 160 % for 10 s with a duty cycle duration of 300 s.

[5] If the drive closed-loop control is still to remain active when the line supply fails, the equipment must be provided with an external 24 V DC supply.

[6] Information regarding the correlation between the pulse frequency and max. output current/output frequency is provided in the SINAMICS Low Voltage Engineering Manual.

[7] The specified power losses are the maximum values at 100 % utilization. The values are lower under normal operating conditions.

[8] In conjunction with the specified fuses or circuit breakers.

[9] Current required for reliably triggering protective devices.

© Siemens 2024

Characteristic curves

Derating data

SINAMICS S150 converter cabinet units and the associated system components are rated for an ambient temperature of 40 °C and installation altitudes up to 2000 m above sea level.

At ambient temperatures > 40 °C, the output current must be reduced. Ambient temperatures above 50 °C are not permissible.

At installation altitudes > 2000 m above sea level, it must be taken into account that the air pressure, and therefore air density, decreases as the height increases. As a consequence, the cooling efficiency and the insulation capacity of the air also decrease.

Due to the reduced cooling efficiency, it is necessary, on the one hand, to reduce the ambient temperature and on the other hand, to lower heat loss in the converter cabinet unit by reducing the output current, whereby ambient temperatures lower than 40 °C may be offset to compensate.

The following table lists the permissible output currents depending on the installation altitude and ambient temperature for the various degrees of protection. The specified values already include a permitted compensation in respect of installation altitude and ambient temperatures < 40 °C (temperature at the air intake of the converter cabinet unit).

The values apply under the precondition that the cooling air flow stated in the technical specifications is ensured by the way the devices are installed in the cabinet.

As additional measure for installation altitudes from 2000 m up to 5000 m, an isolating transformer is required in order to reduce transient overvoltages according to EN 60664-1.
For additional information, please refer to the SINAMICS Low Voltage Engineering Manual.

Current-derating factors for converter cabinet units depending on the ambient/air intake temperature, the installation altitude and the degree of protection

Degree of protection	Installation altitude above sea level	**Current derating factor** (as a percentage of the rated current) for an ambient/air intake temperature of						
	m (ft)	20 °C (68 °F)	25 °C (77 °F)	30 °C (86 °F)	35 °C (95 °F)	40 °C (104 °F)	45 °C (113 °F)	50 °C (122 °F)
IP20, IP21, IP23, IP43	0 ... 2000 (0 ... 6562)						**93.3 %**	**86.7 %**
	2001 ... 2500 (6565 ... 8202)					**96.3 %**		
	2501 ... 3000 (8205 ... 9843)		100 %		**98.7 %**			
	3001 ... 3500 (9846 ... 11483)							
	3501 ... 4000 (11486 ... 13123)			**96.3 %**				
	4001 ... 4500 (13127 ... 14764)		**97.5 %**					
	4501 ... 5000 (14767 ... 16404)	**98.2 %**						
IP54	0 ... 2000 (0 ... 6562)					**93.3 %**	**86.7 %**	**80.0 %**
	2001 ... 2500 (6565 ... 8202)				**96.3 %**	**89.8 %**		
	2501 ... 3000 (8205 ... 9843)		100 %	**98.7 %**	**92.5 %**			
	3001 ... 3500 (9846 ... 11483)			**94.7 %**				
	3501 ... 4000 (11486 ... 13123)		**96.3 %**	**90.7 %**				
	4001 ... 4500 (13127 ... 14764)	**97.5 %**	**92.1 %**					
	4501 ... 5000 (14767 ... 16404)	**93.0 %**						

© Siemens 2024

Characteristic curves

Current derating as a function of the pulse frequency

To reduce motor noise or to increase output frequency, the pulse frequency can be increased relative to the factory setting (1.25 kHz or 2 kHz). When the pulse frequency is increased, the derating factor of the output current must be taken into account. This derating factor must be applied to the currents specified in the technical specifications.

For additional information, please refer to the SINAMICS Low Voltage Engineering Manual.

Derating factor of the output current depending on the pulse frequency for devices with a rated pulse frequency of 2 kHz

SINAMICS S150 converter cabinet unit	Type rating at 400 V	Output current at 2 kHz	**Derating factor** at pulse frequency				
6SL3710-...	kW	A	2.5 kHz	4 kHz	5 kHz	7.5 kHz	8 kHz
380 ... 480 V 3 AC							
7LE32-1AA3	110	210	95 %	82 %	74 %	54 %	50 %
7LE32-6AA3	132	260	95 %	83 %	74 %	54 %	50 %
7LE33-1AA3	160	310	97 %	88 %	78 %	54 %	50 %
7LE33-8AA3	200	380	96 %	87 %	77 %	54 %	50 %
7LE35-0AA3	250	490	94 %	78 %	71 %	53 %	50 %

Derating factor of the output current depending on the pulse frequency for devices with a rated pulse frequency of 1.25 kHz

SINAMICS S150 converter cabinet unit	Type rating at 400 V or 690 V	Output current at 1.25 kHz	**Derating factor** at pulse frequency					
6SL3710-...	kW	A	2 kHz	2.5 kHz	4 kHz	5 kHz	7.5 kHz	8 kHz
380 ... 480 V 3 AC								
7LE36-1AA3	315	605	83 %	72 %	64 %	60 %	40 %	36 %
7LE37-5AA3	400	745	83 %	72 %	64 %	60 %	40 %	36 %
7LE38-4AA3	450	840	87 %	79 %	64 %	55 %	40 %	37 %
7LE41-0AA3	560	985	92 %	87 %	70 %	60 %	50 %	47 %
7LE41-2AA3	710	1260	92 %	87 %	70 %	60 %	50 %	47 %
7LE41-4AA3	800	1405	97 %	95 %	74 %	60 %	50 %	47 %
500 ... 690 V 3 AC								
7LG28-5AA3	75	85	93 %	89 %	71 %	60 %	40 %	–
7LG31-0AA3	90	100	92 %	88 %	71 %	60 %	40 %	–
7LG31-2AA3	110	120	92 %	88 %	71 %	60 %	40 %	–
7LG31-5AA3	132	150	90 %	84 %	66 %	55 %	35 %	–
7LG31-8AA3	160	175	92 %	87 %	70 %	60 %	40 %	–
7LG32-2AA3	200	215	92 %	87 %	70 %	60 %	40 %	–
7LG32-6AA3	250	260	92 %	88 %	71 %	60 %	40 %	–
7LG33-3AA3	315	330	89 %	82 %	65 %	55 %	40 %	–
7LG34-1AA3	400	410	89 %	82 %	65 %	55 %	35 %	–
7LG34-7AA3	450	465	92 %	87 %	67 %	55 %	35 %	–
7LG35-8AA3	560	575	91 %	85 %	64 %	50 %	35 %	–
7LG37-4AA3	710	735	87 %	79 %	64 %	55 %	25 %	–
7LG38-1AA3	800	810	97 %	95 %	71 %	55 %	35 %	–
7LG38-8AA3	900	910	92 %	87 %	67 %	55 %	33 %	–
7LG41-0AA3	1000	1025	91 %	86 %	64 %	50 %	30 %	–
7LG41-3AA3	1200	1270	87 %	79 %	55 %	40 %	25 %	–

© Siemens 2024

Characteristic curves

Maximum output frequencies achieved by increasing the pulse frequency

The adjustable pulse frequencies – and therefore the output frequencies that can be achieved with the factory-set current controller clock cycles – are listed below.

Current controller clock cycle T_I	Adjustable pulse frequency f_p	Max. achievable output frequency f_A	
		V/f mode	Vector mode
250 µs [1]	2 kHz	166 Hz	166 Hz
	4 kHz	333 Hz	333 Hz
	8 kHz	550 Hz	480 Hz
400 µs [2]	1.25 kHz	104 Hz	104 Hz
	2.5 kHz	208 Hz	208 Hz
	5.0 kHz	416 Hz	300 Hz [3]
	7.5 kHz	550 Hz	300 Hz [3]

Overload capability

The SINAMICS S150 converter cabinet units are equipped with an overload reserve to deal with breakaway torques, for example. If larger surge loads occur, this must be taken into account in the configuration. For drives with overload requirements, the appropriate base load current must, therefore, be used as a basis for the required load.

The criterion for overload is that the drive is operated with its base load current before and after the overload occurs on the basis of a duty cycle duration of 300 s.

Another precondition is that the frequency converter is operated at its factory-set pulse frequency at output frequencies >10 Hz.

For temporary, periodic duty cycles with high variations of load within the duty cycle, the relevant sections of the SINAMICS Low Voltage Engineering Manual must be observed.

The base-load current for a low overload I_L is the basis for a duty cycle of 110 % for 60 s or 150 % for 10 s.

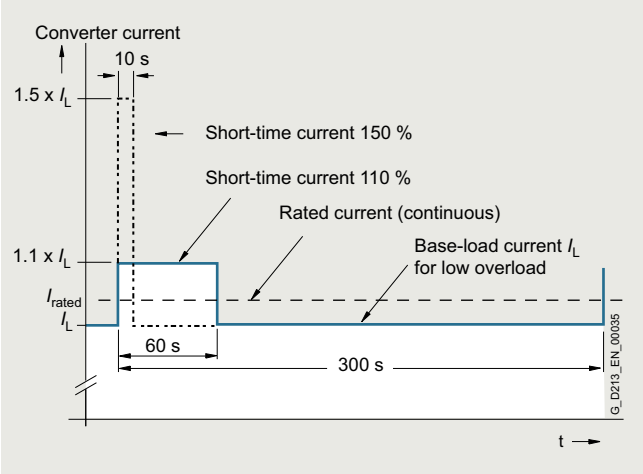

Low overload

The base-load current I_H for a high overload is based on a load cycle of 150 % for 60 s or 160 % for 10 s.

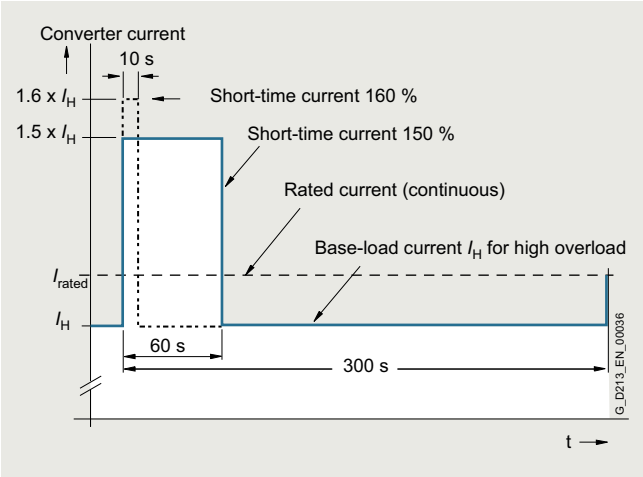

High overload

[1] As factory setting, the following devices have a current controller clock cycle of 250 µs and a pulse frequency of 2 kHz: - 380 ... 480 V 3 AC: ≤ 250 kW / 490 A

[2] As factory setting, the following devices have a current controller clock cycle of 400 µs and a pulse frequency of 1.25 kHz: - 380 ... 480 V 3 AC: ≥ 315 kW / 605 A, 500... 690 V 3 AC: All power ratings

[3] The maximum output frequency is limited to 300 Hz due to the closed-loop control.

© Siemens 2024

Options

When ordering a converter with options, add the suffix "**-Z**" to the article number and then the order code(s) for the desired option(s).

Example:
6SL3710-7LE32-1AA3-Z
M07+D60+...

See also ordering examples.

Available options	Order code
Input side	
Use in the first environment according to EN 618003, Category C2 (TN-TT line supplies with grounded neutral point)	**L00**
Infeed module one level lower	**L04**
Surge suppression	**L21**
Main switch incl. fuses or circuit breakers	**L26**
Line filter monitoring	**L40**
EMC shield bus (cable connection from below) [1]	**M70**
Output side	
dv/dt filter plus Voltage Peak Limiter	**L07**
Motor reactor	**L08**
dv/dt filter plus Voltage Peak Limiter	**L10**
Sine-wave filter (only for the voltage range 380 to 480 V, up to 200 kW)	**L15**
EMC shield bus (cable connection from below) [1]	**M70**
Motor protection and safety functions	
EMERGENCY OFF pushbutton installed in the cabinet door	**L45**
EMERGENCY OFF category 0	**L57**
EMERGENCY STOP category 1, 230 V AC	**L59**
EMERGENCY STOP category 1, 24 V DC	**L60**
Thermistor motor protection (alarm)	**L83**
Thermistor motor protection (trip)	**L84**
Pt100 evaluation unit	**L86**
Insulation monitoring	**L87**
Additional touch protection	**M60**
Degree of protection increase	
Degree of protection IP21	**M21**
Degree of protection IP23	**M23**
Degree of protection IP43	**M43**
Degree of protection IP54	**M54**
Mechanical options	
Base 100 mm high, RAL 7022	**M06**
Cable-marshaling compartment 200 mm high, RAL 7035	**M07**
Line connection from above	**M13**
Motor connection from above	**M78**
Crane transport assembly for cabinets (top-mounted)	**M90**
Safety Integrated	
Safety license Extended Functions for 1 axis	**K01**
Second SMC30 Sensor Module Cabinet-Mounted	**K52**
Terminal module for controlling the Safe Torque Off and Safe Stop 1 safety functions	**K82**
TM54F Terminal Module	**K87**
SBA Safe Brake Adapter, 230 V AC	**K88**

Available options	Order code
Other options	
CBE20 Communication Board	**G33**
TM150 temperature sensor evaluation unit	**G51**
TM31 Terminal Module	**G60**
Additional TM31 Terminal Module	**G61**
TB30 Terminal Board	**G62**
SMC10 Sensor Module Cabinet-Mounted	**K46**
SMC20 Sensor Module Cabinet-Mounted	**K48**
SMC30 Sensor Module Cabinet-Mounted	**K50**
VSM10 Voltage Sensing Module	**K51**
CU320-2 PN Control Unit	**K95**
Connection for external auxiliary equipment	**L19**
Cabinet lighting with service socket	**L50**
Cabinet anti-condensation heating	**L55**
25/125 kW braking unit for line voltages of 380 … 480 V (110 … 132 kW) and 660 … 690 V (75 … 132 kW)	**L61**
50/250 kW braking unit for line voltages of 380 … 480 V (160 … 800 kW) and 660 … 690 V (160 … 1200 kW)	**L62**
25/125 kW braking unit for line voltages of 500 … 600 V (110 … 132 kW)	**L64**
50/250 kW braking unit for line voltages of 500 … 600 V (160 … 1200 kW)	**L65**
Marking of all control cable wire ends	**M91**
Special cabinet paint finish [2]	**Y09**
One-line label for system identification, 40 × 80 mm	**Y31**
Two-line label for system identification, 40 × 180 mm	**Y32**
Four-line label for system identification, 40 × 180 mm	**Y33**
Production flowcharts	
Documentation, production flowchart: one issue	**B43**
Documentation, production flowchart: updated every two weeks	**B44**
Documentation, production flowchart: updated every month	**B45**
Packaging options	
Generation of a preliminary and a final packing list (shipping)	**B55**
Packed items labeled with a customized label	**B56**
Photo documentation of the ordered units	**B57**

[1] This option is listed for the input- and output-side options, but is only required once.

[2] The order code **Y..** requires data in plain text.

© Siemens 2024

Options

Available options	Order code
Documentation (standard: English/German)	
Documentation in German	**D00**
Customer documentation (circuit diagram, layout diagram, dimension drawing, spare parts list) in EPLAN format.	**D01**
Customer documentation (circuit diagram, terminal diagram, layout diagram) in DXF format	**D02**
Preliminary version of customer documentation	**D14**
Documentation in Russian	**D56**
Documentation in English/French	**D58**
Documentation in English/Spanish	**D60**
Documentation in Italian	**D72**
Documentation in English/German (standard)	**D74**
Documentation in French	**D77**
Documentation in Spanish	**D78**
Documentation in English/Italian	**D80**
Documentation in Chinese	**D84**
Documentation in English/Chinese	**D91**
Documentation in English/Portuguese (Brazil)	**D93**
Documentation in English/Russian	**D94**
Rating plate data (standard: English/German)	
Rating plate data in English/French	**T58**
Rating plate data in English/Spanish	**T60**
Rating plate data in English/Italian	**T80**
Rating plate data in English/Portuguese (Brazil)	**T83**
Rating plate data in English/Russian	**T85**
Rating plate data in English/Chinese	**T91**

Available options	Order code
Options specific to the chemical industry	
NAMUR terminal strip	**B00**
Protective separation for 24 V supply (PELV)	**B02**
Outlet for external auxiliary equipment (uncontrolled)	**B03**
Options specific to the shipbuilding industry	
Marine version	**M66**
Individual certificate from Lloyds Register (LR)	**E21**
Individual certificate from Bureau Veritas (BV)	**E31**
Individual certificate from DNV	**E51**
Individual certificate from American Bureau of Shipping (ABS)	**E61**
Individual certificate from China Classification Society (CCS)	**E71**
Converter acceptance in presence of customer	
Visual acceptance	**F03**
Function test without motor	**F71**
Function test with test bay motor under no-load conditions	**F75**
Insulation test	**F77**
Customer-specific acceptance inspections (on request)	**F97**
Converter acceptance without the customer present	
Function test without motor	**F72**
Function test with test bay motor under no-load conditions	**F74**
Insulation test	**F76**

Option selection matrix

Certain options can mutually exclude one another (options that are not involved, are also not shown).

✓	Possible combination
–	Combination not possible

Electrical options

	L07	L08	L10	L15	L57	L59	L60	L61/ L64	L62/ L65	L87	K82	M78
L07		–	–	–	✓	✓	✓	✓	✓	✓	✓	–
L08	–		–	–	✓	✓	✓	✓	✓	✓	✓	–
L10	–	–		–	✓	✓	✓	✓	✓	✓	✓	–
L15	–	–	–		✓	✓	✓	✓	✓	✓	✓	–
L57	✓	✓	✓	✓		–	–	✓	✓	✓	✓	✓
L59	✓	✓	✓	✓	–		–	✓	✓	✓	✓	✓
L60	✓	✓	✓	✓	–	–		✓	✓	✓	✓	✓
L61/L64	✓	✓	✓	✓	✓	✓	✓		–	✓	✓	✓
L62/L65	✓	✓	✓	✓	✓	✓	✓	–		✓	✓	✓
L87	✓	✓	✓	✓	✓	✓	✓	✓	✓		– [1]	✓
K82	✓	✓	✓	✓	✓	✓	✓	✓	✓	– [1]		✓
M78	–	–	–	–	✓	✓	✓	✓	✓	✓	✓	

[1] A combination of **L87** and **K82** is available on request.

© Siemens 2024

Options

Mechanical/electrical options

	L00	M06	M07	M13	M21	M23	M43	M54	M60	M66	M70	M78
L00		✓	✓	✓	✓	✓	✓	✓	✓	✓	[1]	✓
M06	✓		–	✓	✓	✓	✓	✓	✓	✓	✓	✓
M07	✓	–		✓	✓	✓	✓	✓	✓	✓	✓	✓
M13	✓	✓	✓		✓	✓	✓	✓	✓	✓	[2]	✓
M21	✓	✓	✓	✓		–	–	–	– [3]	–	✓	–
M23	✓	✓	✓	✓	–		–	–	–	–	✓	✓
M43	✓	✓	✓	✓	–	–		–	–	✓	✓	✓
M54	✓	✓	✓	✓	–	–	–		–	✓	✓	✓
M60	✓	✓	✓	–	– [3]	–	–	–		✓	✓	–
M66	✓	✓	✓	✓	–	–	✓	✓	✓		✓	–
M70	[1]	✓	✓	[2]	✓	✓	✓	✓	✓	✓		– [2]
M78	✓	✓	✓	✓	–	✓	✓	✓	–	–	– [2]	

Other options

	G20	G33	G62	K46	K48	K50	K51	K52
G20		–	–	✓	✓	✓	✓	✓
G33	–		–	✓	✓	✓	✓	✓
G62	–	–		✓	✓	✓	✓	✓
K46	✓	✓	✓		–	–	–	–
K48	✓	✓	✓	–		–	–	–
K50	✓	✓	✓	–	–		–	✓
K51	✓	✓	✓	–	–	–		–
K52	✓	✓	✓	–	–	✓	–	

Documentation

	D00	D01	D02	D14	D56	D58	D60	D72	D77	D78	D80	D84	D91	D93	D94
D00		✓	✓	✓	✓	✓	✓	✓	✓	✓	✓	✓	✓	✓	✓
D01	✓		✓	–	✓	✓	✓	✓	✓	✓	✓	✓	✓	✓	✓
D02	✓	✓		✓	✓	✓	✓	✓	✓	✓	✓	✓	✓	✓	✓
D14	✓	–	✓		✓	✓	✓	✓	✓	✓	✓	✓	✓	✓	✓
D56	✓	✓	✓	✓		✓	✓	✓	✓	✓	✓	✓	✓	✓	–
D58	✓	✓	✓	✓	✓		–	✓	–	✓	–	✓	–	–	–
D60	✓	✓	✓	✓	✓	–		✓	✓	–	–	✓	–	–	–
D72	✓	✓	✓	✓	✓	✓	✓		✓	✓	–	✓	✓	✓	✓
D77	✓	✓	✓	✓	✓	–	✓	✓		✓	✓	✓	✓	✓	✓
D78	✓	✓	✓	✓	✓	✓	–	✓	✓		✓	✓	✓	✓	✓
D80	✓	✓	✓	✓	✓	–	–	–	✓	✓		✓	–	–	–
D84	✓	✓	✓	✓	✓	✓	✓	✓	✓	✓	✓		–	✓	✓
D91	✓	✓	✓	✓	✓	–	–	✓	✓	✓	–	–		–	–
D93	✓	✓	✓	✓	✓	–	–	✓	✓	✓	–	✓	–		–
D94	✓	✓	✓	✓	–	–	–	✓	✓	✓	–	✓	–	–	

Rating plate data

	T58	T60	T80	T83	T85	T91
T58		–	–	–	–	–
T60	–		–	–	–	–
T80	–	–		–	–	–
T83	–	–	–		–	–
T85	–	–	–	–		–
T91	–	–	–	–	–	

[1] Option **L00** includes option **M70**.

[2] If the line connection (option **M13**) and the motor connection (option **M78**) are from above, the EMC shield bus is not required in the lower cabinet area.

[3] Can only be selected for converters in the voltage range 400 V to 250 kW and 690 V to 315 kW. The **M60** option is fitted as standard for higher outputs.

© Siemens 2024

Options

Ordering examples

Example 1

Task:
A drive system is required for a vehicle test stand to perform exhaust gas analysis which can simulate driving profiles and cycles as encountered in everyday traffic situations. This means for the drive system that the dynamometer must be operated both in the motoring as well as regenerating modes.

A drive with regenerative feedback into the line supply is required as regenerative operation is the predominant operating mode and dynamic switching operations are required.

The max. regenerative power is 200 kW. The converter must have degree of protection IP54 as a result of the environmental conditions. An installation altitude of < 1000 m and 45 °C as the maximum ambient temperature can be assumed. The windings must be equipped with Pt100 resistance thermometers and monitored by the converter for alarm and trip. A switch disconnector must be provided to disconnect the converter from the 400 V power supply. In addition, the cabinet is to have a special paint finish in RAL 3002.

Solution:
Taking into account the derating factors for degree of protection IP54 and the increased ambient temperature of 45 °C, a converter with a minimum power rating of 223 kW should be configured.
A converter with a power rating of at least 250 kW and options **M54** (degree of protection IP54), **L26** (main switch including fuses), **L86** (Pt100 evaluation unit) and **Y09** (special paint finish) is selected.

The ordering data are as follows:
6SL3710-7LE35-0AA3-Z
M54+L26+L86+Y09
Cabinet color RAL 3002

Example 2

Task:
A drive system is required for a conveyor belt in a brown-coal open-cast mine that is capable of both motor and generator operation. Since the conveyor belt must be capable of starting after a fault when loaded with bulk material, and it is possible for peak loads to occur where 1.5 times the power is required for up to 60 s, the drive system must be designed according to the overload requirements of such a case. The converter is installed in a climate-controlled container as a result of the environmental conditions typical of an open-cast mine. The installation altitude is 320 m above sea level and the maximum ambient temperature in the container is 35 °C. The drive is powered through a converter transformer from the medium-voltage system. The drive is connected to an isolated-neutral system and must have insulation monitoring. A motor with separately-driven fan is selected here as the motor is subject to a high load torque when starting and in the lower range. The fan supply voltage is 690 V and must be drawn from the converter.
The required motor power is 420 kW.

Solution:
Since the converter is installed in an air-conditioned container, it can be designed with degree of protection IP20. The ambient temperature of 35 °C does not necessitate any additional derating. However, due to the specified overload conditions, the base load current I_H (for high overload) must be applied.
This results in a power of approx. 520 kW for the converter. The converter with article no. 6SL3710-7LG35-8AA3 must be selected.

Option **L87** (insulation monitoring) must be selected for insulation monitoring.

Option **L19** (connection for external auxiliaries) must be selected for the controlled outgoing feeder to power the separately driven fan.

The ordering data are as follows:
6SL3710-7LG35-8AA3-Z
L19+L87

© Siemens 2024

Options

B00, B02, B03
Options compliant with NAMUR requirements

Exclusion list with other options:

The following restrictions and exclusions applicable to the NAMUR terminal strip **B00** with regard to other available options must be taken into account.

Not permissible with options	Reason
L45, L57, L59, L60	A Category 0 EMERGENCY OFF is already provided in the NAMUR version. The forced line supply disconnection is connected at terminal -X2: 17, 18.
L83, L84	The **B00** option already provides a PTC thermistor evaluation unit as standard (trip).
L19	Alternatively, option **B03** can be selected. This provides a reduced scope for external auxiliaries.
L87	The insulation monitor monitors the complete electrically coupled network. An insulation monitor must therefore be provided on site.
G60	The **B00** option already provides a Terminal Module TM31 as a standard feature.

With options **L50, L55, L86**, the connection is made as described in the standard. There is no wiring to the NAMUR terminal strip.

B00
NAMUR terminal strip

The terminal strip is designed according to the requirements and directives of the standards association for measurement and control in the chemical industry (NAMUR recommendation NE37). I.e. terminals are specifically assigned to particular device functions. The inputs and outputs connected to the terminals fulfill PELV requirements (protective extra-low voltage) with protective separation.

The terminal strip and associated functions have been reduced to the necessary minimum. Unlike the NAMUR recommendation, optional terminals are not available.

Terminal -X2:	Meaning	Default	Remarks
10	DI	ON (dynamic) / ON/OFF (static)	The effective mode can be encoded using a wire jumper at terminal -400: 9; 10 codable
11	DI	OFF (dynamic)	
12	DI	Faster	
13	DI	Slower	
14	DI	RESET	
15	DI	Interlock	
16	DI	Counter-clockwise	0 signal for CW rotating field 1 signal for CCW rotating field
17, 18		Supply disconnection	EMERGENCY OFF circuit
30, 31		Ready	Relay output (NO contact)
32, 33		Motor is turning	Relay output (NO contact)
34	DO (NO)	Fault	Relay output (changeover contact)
35	DO (COM)		
36	DO (NC)		
50, 51	AI 0/4 ... 20 mA	Speed setpoint	
60, 61	AO 0/4 ... 20 mA	Motor frequency	
62, 63	AO 0/4 ... 20 mA	Motor current	Motor current is default setting; can be reparameterized for other variables

The 24 V supply is provided on the plant side via terminals -X2:1-3 (fused in the converter with 1 A). It must be ensured that the PELV safety requirements are fulfilled (protective extra-low voltage with protective separation).

Terminal -X2:	Meaning	
1	M	Reference conductor
2	P24	24 V DC supply
3	P24	24 V DC outgoing feeder

For temperature monitoring of explosion-proof motors, option **B00** includes a PTC thermistor.
Exceeding the limit value causes a shutdown. The associated PTC sensor is connected to terminal -X3: 90, 91.

Terminal -X3:	Meaning	
90, 91	AI	Connection of PTC sensor

B02
Protective separation for 24 V supply (PELV)

If no protective separation for 24 V supply (PELV) is available at the customer site, this option is used to provide a second power supply to guarantee compliance with PELV. (Terminal assignments as for option **B00**, 24 V supply at terminals -X1:1, 2, 3 is not required)

Notice:
The option **B02** must always be combined with **B00**.

© Siemens 2024

Options

B03
Outgoing feeder for external auxiliaries (uncontrolled)

If, for example, a motor fan is to be supplied with power from the plant, option **B03** provides an uncontrolled external outgoing feeder with a 10 A fuse. As soon as the supply voltage is present at the converter input, a voltage is also present at these terminals. This corresponds to the converter input voltage ($U = U_{line}$). You must take this into account when configuring an external fan.

Terminal -X1:	Meaning
1, 2, 3, PE	Outgoing feeder for external auxiliary equipment

Notice:

Option **B03** must always be combined with **B00**.

B43, B44, B45
Production flowcharts

Production flowcharts are provided with options **B43** to **B45**. After the order has been clarified, these are emailed as a dual language (English/German) PDF file.

Option	Description
B43	Documentation – Production flowchart: one issue
B44	Documentation – Production flowchart: updated every two weeks
B45	Documentation – Production flowchart: updated every month

B55
Generation of a preliminary and a final packing list (shipping)

This option provides the electronically editable packing list (possibly predefined from the factory) with the following information in Excel format:

- Number of individual packages
- Type of package (pallet, crate, etc.)
- Weight (unpacked and packed)
- Dimensions (unpacked and packed)
- Delivery location
- Label for package item (when option B56 is ordered)
- Description of what is in the package

A first packing list is generated after complete technical clarification with preliminary data. When shipped, a final packing list is provided with the actual data.

B56
Packed items labeled with a customized label

With this option, customized labels are attached to the unpacked and packed packaged units. Internal customers must provide two labels at least 2 weeks before the shipping date (printout to the factory logistics department, specifying the article number).

B57
Photographic documentation of the ordered units

This option provides digital photographic documentation with the following content:

- 1 photo diagonally from the front
- 1 photo diagonally from the rear (opposite)
- 1 photo with the packed item on which the label is legible

The listed photos of the packed items are taken in both an unpacked and a packed state in each position (a total of 6 photos per packed item).

D01
Customer documentation (circuit diagram, layout diagram, dimension drawing, spare parts list) in EPLAN format

When ordering the option **D01**, the final version of the cabinet circuit diagram, layout diagram, dimension drawing and spare parts list in EPLAN format will be digitally delivered.

D02
Customer documentation (circuit diagram, terminal diagram, layout diagram) in DXF format

Option **D02** can be used to order documents such as circuit diagrams, terminal diagrams, layout diagrams, and dimension drawings in DXF format, e.g. for further processing in AutoCAD systems.

D14
Preliminary version of customer documentation

If documents such as circuit diagrams, terminal diagrams, layout diagrams and dimension drawings are required in advance for the purpose of system engineering (integration of drive into higher-level systems, interface definition, installation, building planning, etc.), it is possible to order a draft copy of the documentation when ordering the converter cabinet units. These documents are then supplied electronically a few working days following receipt of the order. If the order includes options that fall outside the scope of standard supply, these will not be covered by the documentation due to the obvious time constraints.

The client is sent the documentation relating to the order by email. The recipient's email address must be specified with the order for this purpose. In the email, the recipient will also receive a link for downloading order-specific documentation.
With the option **D02**, the documents are also delivered in DXF format.

D58, D60, D74, D80, D91, D93, D94
Documentation as language package

If a documentation option is not selected, the relevant documentation is supplied as standard in English/German (**D74**). When one of the options specified in the table is selected, the standard documentation language will be changed from English / German to the language combination provided by the option.

Order code	Language
D58	English/French
D60	English/Spanish
D80	English/Italian
D91	English/Chinese
D93	English/Portuguese (Brazil)
D94	English/Russian

© Siemens 2024

Options

D00, D56, D72, D77, D78, D84
Documentation in a single language

In addition to the ordered language package the documentation is also available in a single language, for example, to be able to order other language combinations.

For example, in addition to the English/German standard documentation (**D74**), an additional language, e.g. Spanish (**D78**), can also be ordered.

Order code	Language
D00	German
D56	Russian
D72	Italian
D77	French
D78	Spanish
D84	Chinese

E21 to E71
Individual certification

A type certificate is available for the marine classification institute DNV.
An additional individual certification of the converter by the respective certification institute contains the extensions described under option **M66**.
With the respective option, the converter and the documentation are certified by an acceptor (certified recipient) for the respective institute and an individual certificate is created.

- **E21** Individual certificate from Lloyds Register (LR)
- **E31** Individual certificate from Bureau Veritas (BV)
- **E51** Individual certificate from DNV
- **E61** Individual certificate from American Bureau of Shipping (ABS)
- **E71** Individual certificate from China Classification Society (CCS)

Note:
Several individual certificates can be combined.

F03, F71, F72, F74, F75, F76, F77, F97
Converter acceptance inspections

Order code	Description
F03	**Visual acceptance** The inspection includes the following: • Check of degree of protection • Check of equipment (components) • Check of equipment identifiers • Check of clearance and creepage distances • Check of cables • Check of customer documentation • Submission of the acceptance report The tests are carried out with the converter de-energized.
F71 (witnessed by customer) **F72** (not witnessed by customer)	**Function test without connected motor** After the visual acceptance with the converter switched off, the converter is connected to rated voltage. No current at the converter output end. The inspection includes the following: • Visual acceptance as described for option **F03** • Check of power supply • Check of protective and monitoring devices (simulation) • Check of fans • Pre-charging test • Function test without connected motor • Submission of the acceptance report
F74 (not witnessed by customer) **F75** (witnessed by customer**)**	**Function test with test bay motor under no-load conditions** After the visual acceptance with the converter switched off, the converter is connected to rated voltage. A small current flows at the converter output end in order to operate the test bay motor under no-load conditions. The inspection includes the following: • Visual acceptance as described for option **F03** • Check of power supply • Check of protective and monitoring devices (simulation) • Check of fans • Pre-charging test • Function test with test bay motor under no-load conditions • Submission of the acceptance report
F76 (not witnessed by customer) **F77** (witnessed by customer)	**Insulation test** The inspection includes the following: • High-voltage test • Measurement of the insulation resistance • Submission of the acceptance report
F97	**Customer-specific acceptance inspections (on request)** If acceptance inspections that are not covered by the options **F03**, **F71**, **F75**, or **F77** are required, customer-specific acceptance inspections/supplementary tests can be ordered using order code **F97** on request and following technical clarification.

© Siemens 2024

Options

G33
CBE20 Communication Board

The CBE20 Communication Board can be used to connect the SINAMICS S150 to a PROFINET IO, EtherNet/IP or Modbus TCP network via a CU320-2 Control Unit. The CBE Communication Board plugs into the option slot on the CU320-2 Control Unit.

It cannot be combined with option **G20**.

Note:

Only one communication interface can be used in isochronous operation when the Communication Board CBE20 is used in a Control Unit CU320-2.

- CU320-2 DP: Either the DP interface of the Control Unit or the PN interfaces of the CBE20
- CU320--2 PN: Either the internal PN interfaces or the external PN interfaces of the CBE20

Description of the CBE20 Communication Board → System components → Supplementary system components.

G51
TM150 temperature sensor evaluation unit

The TM150 Terminal Module is a DRIVE-CLiQ component that is used to acquire and evaluate data from several temperature sensors. The temperature is measured in a temperature range from -99 °C to +250 °C for the following temperature sensors:

- Pt100 (with monitoring for wire breaks and short-circuits)
- Pt1000 (with monitoring for wire breaks and short-circuits)
- KTY84 (with monitoring for wire breaks and short-circuits)
- PTC (with monitoring for short-circuits)
- Bimetallic NC contact (without monitoring)

For the temperature sensor inputs, for each terminal block the evaluation can be parameterized for 1×2-wire, 2×2-wire, 3-wire or 4-wire. There is no galvanic isolation in the TM150.

A maximum of 12 temperature sensors can be connected to the TM150 Terminal Module.

Description of the TM150 Terminal Module → System components → Supplementary system components.

G60
TM31 Terminal Module

The TM31 Terminal Module is used to expand the customer terminal.

The following additional interfaces are available:

- 8 digital inputs
- 4 bidirectional digital inputs/outputs
- 2 relay outputs with changeover contact
- 2 analog inputs
- 2 analog outputs
- 1 temperature sensor input (KTY84-130/PTC)
- 2 DRIVE-CLiQ sockets
- 1 connection for the electronics power supply via the 24 V DC supply connector
- 1 PE/protective conductor connection

To simplify configuration and commissioning of the drive, the optional TM31 Terminal Module is already preset with various factory settings, which can then be selected when commissioning the system.

Description of the TM31 Terminal Module → System components → Supplementary system components.

For additional information, please refer to the SINAMICS Low Voltage Engineering Manual.

G61
Additional TM31 Terminal Module

With option **G61**, the number of digital inputs/outputs, as well as the number of analog inputs/outputs in the drive system can be expanded using a second TM31 Terminal Module (in addition to the TM31 Terminal Module that can be selected using option **G60**).

Note:

Option **G61** requires option **G60**.

G62
TB30 Terminal Board

The TB30 Terminal Board supports the addition of digital inputs/digital outputs and analog inputs/analog outputs to the Control Unit. The TB30 Terminal Board plugs into the option slot on the Control Unit.

The following are located on the TB30 Terminal Board:

- Power supply for digital inputs/digital outputs
- 4 digital inputs
- 4 digital outputs
- 2 analog inputs
- 2 analog outputs

Description of the TB30 Terminal Board → System components → Supplementary system components.

K01
Safety license Extended Functions for 1 axis

The Safety Integrated Basic Functions do not require a license. However, the Safety Integrated Extended Functions require a license for each axis equipped with safety functions. It is irrelevant which safety functions are used and how many. Option **K01** contains the license for one axis.

Subsequent licensing is possible online via the WEB License Manager by generating a license key:

www.siemens.com/automation/license

K46
SMC10 Sensor Module Cabinet-Mounted

The SMC10 Sensor Module Cabinet-Mounted can be used to simultaneously sense the speed and the rotor position angle. The signals received from the resolver are converted here and made available to the closed-loop controller via the DRIVE-CLiQ interface for evaluation purposes.

The following encoder signals can be evaluated:

- 2-pole resolver
- Multi-pole resolver

The motor temperature can also be measured using KTY84-130, Pt1000 or PTC thermistors.

Description of the SMC10 Sensor Module Cabinet-Mounted → System components → Encoder system interface.

© Siemens 2024

Options

K48
SMC20 Sensor Module Cabinet-Mounted

The SMC20 Sensor Module Cabinet-Mounted can be used to simultaneously sense the speed and position. The signals received from the incremental encoder are converted here and made available to the closed-loop controller via the DRIVE-CLiQ interface for evaluation purposes.

The following encoder signals can be evaluated:

- Incremental encoder sin/cos 1 V_{pp}
- Absolute encoder EnDat 2.1
- SSI encoder with incremental signals sin/cos 1 V_{pp}

The motor temperature can also be detected using KTY84-130, Pt1000 or PTC thermistors.

Description of the SMC20 Sensor Module Cabinet-Mounted → System components → Encoder system interface.

K50
SMC30 Sensor Module Cabinet-Mounted

The SMC30 Sensor Module Cabinet-Mounted can be used to evaluate the encoders of motors without a DRIVE-CLiQ interface. External encoders can also be connected via the SMC30.

The following encoder signals can be evaluated:

- Incremental encoders TTL/HTL with and without open-circuit detection (open-circuit detection is only available with bipolar signals)
- SSI encoders with TTL/HTL incremental signals
- SSI encoders without incremental signals

The motor temperature can also be measured using KTY84-130, Pt1000 or PTC thermistors.

Description of the SMC30 Sensor Module Cabinet-Mounted → System components → Encoder system interface.

K51
VSM10 Voltage Sensing Module

The VSM10 Voltage Sensing Module is used to measure the voltage characteristic on the motor side, so that the following function can be implemented:

- Operation of a permanent-magnet synchronous motor without encoder with the requirement to be able to connect to a motor that is already running (flying restart function)
- Quick flying restart of large induction motors: The time for the demagnetization of the motor is eliminated as a result of the voltage sensing.

Description of the VSM10 Voltage Sensing Module → System components → Supplementary system components.

K52
Second SMC30 Sensor Module Cabinet-Mounted

With option **K50**, the cabinet unit contains an SMC30 Sensor Module Cabinet-Mounted. An additional SMC30 (option **K52**) Sensor Module enables reliable actual-value acquisition when using Safety Integrated extended functions (requires a license: option **K01**).

Detailed and comprehensive instructions and information for the Safety Integrated functions can be found in the associated Function Manual.

K82
Terminal Module for controlling the Safe Torque Off and Safe Stop 1 safety functions

The terminal module controls the Safety Integrated Basic Functions Safe Torque Off (STO) and Safe Stop 1 (SS1) (time-controlled) over a voltage of 24 V DC/AC (terminology as defined in IEC 61800-5-2). The relays used here are permitted up to an installation altitude of 2000 m. The use of this option for requirements that go beyond this is possible upon request.

The integrated safety functions, starting from the Safety Integrated (SI) input terminals of the components (Control Unit and Power Module), satisfy the requirements of EN 61800-5-2, EN 60204-1, EN ISO 13849-1 Category 3 for Performance Level (PL) d and IEC 61508 SIL 2.

With option **K82**, the requirements specified in EN 61800-5-2, EN 60204-1, EN ISO 13849-1 Category 3 for Performance Level (PL) d and IEC 61508 SIL 2 are fulfilled.

The Safety Integrated functions using option **K82** are only available in conjunction with certified components and software versions.

The Safety Integrated functions of SINAMICS are generally certified by independent institutes. An up-to-date list of certified components is available on request from your local Siemens office.

K87
TM54F Terminal Module

The Terminal Module TM54F is a terminal expansion module with safe digital inputs and outputs to control the Safety Integrated functions.

The TM54F is directly connected to a Control Unit via DRIVE-CLiQ. Each Control Unit can be assigned precisely to one TM54F.

Note:

It is not permissible to connect Motor Modules or Line Modules to a TM54F.

The TM54F provides 4 fail-safe digital outputs and 10 fail-safe digital inputs. A fail-safe digital output consists of one 24 V DC switching output, one output switching to ground and one digital input to check the switching state. A fail-safe digital input consists of two digital inputs.

Description of the TM54F Terminal Module → System components → Supplementary system components.

© Siemens 2024

Options

K88
SBA Safe Brake Adapter, 230 V AC

The Safe Brake Control (SBC) is a safety function that is used in safety-relevant applications, for example in presses or rolling mills. In the no-current state, the brake acts on the drive motor using spring force. The brake is released when current flows in it (low active).

The Safe Brake Adapter is already installed in the cabinet unit in the factory. A source of power is connected to terminal -X12 on the Safe Brake Adapter. For control, a connection is established between the Safe Brake Adapter and the Control Interface Module in the factory using a cable harness.

On the plant side, to control the brake, a connection must be established between terminal -X14 on the Safe Brake Adapter and the brake.

Description of the SBA Safe Brake Adapter → System components → Supplementary system components.

K95
CU320-2 PN Control Unit (PROFINET)

Instead of the CU320-2 DP (PROFIBUS) Control Unit provided as standard, the converter is delivered with a CU320-2 PN Control Unit (PROFINET), including a CompactFlash card.

Description of the CU320-2 Control Unit → System components → Control Units.

L00
Use in the first environment according to EN 61800-3, Category C2
(TN/TT supply systems with grounded neutral point)

To limit interference emission, the converter includes as standard a radio interference suppression filter according to the EMC product standard EN 61800-3, Category C3 (use in the industrial environment or in the second environment).

By using the optionally available line filter (option **L00**), up to a motor cable length of 300 m on grounded line supplies, the converters are suitable for use according to Category C2 (residential area or first environment).

However, complying with the limit values in the standard means that all of the relevant installation specifications regarding grounding and shielding must be strictly observed.

Notes on this are provided in the SINAMICS Low Voltage Engineering Manual as well as in the appropriate operating instructions.

To allow the shield of the power cables to be connected in conformance with EMC requirements, an additional EMC shield bus (option **M70**) is installed at the converter input and output. A separate order is not required in this case.

L04
Infeed module one level lower

With this option, an infeed (Active Line Module/Active Interface Module) rated one power level lower than the Motor Module (inverter) is used.

For instance, this option is suitable for the following applications:

- When the Motor Module is operated at pulse frequencies greater than the rated pulse frequency, which means that the output power is reduced (current derating as a function of the pulse frequency).
- When the rated power is demanded when generating, and the system losses are covered by the Motor Module.
- When using motors with a higher efficiency and/or a lower power factor when compared to typical standard induction motors.
- The maximum current of the Motor Module is demanded below the maximum power of the unit, e.g. drives with a high breakaway torque.

When using option **L04**, the following restrictions must always be taken into consideration:

- The rated output current of the Motor Module is only available as long as the infeed (Active Line Module) is not loaded with the rated power.
- For line undervoltage conditions, the output power is reduced linearly with the line voltage.
- The unit should be operated with a system power factor cos φ = 1 (this is the factory setting) and should only provide the active power. Additional compensation of reactive power from the power system is not advisable.

Option **L04** is available for the following cabinet units:

SINAMICS S150 converter cabinet unit	Type rating at 400 V	**Permissible currents**		
		Output	Input	
			Standard	With option L04
6SL3710-...	kW	A	A	A
Line voltage 380 … 480 V 3 AC				
7LE33-1AA3	160	310	310	260
7LE35-0AA3	250	490	490	380
7LE36-1AA3	315	605	605	490
7LE37-5AA3	400	745	745	605
7LE41-0AA3	560	985	985	840

© Siemens 2024

Options

L07
dv/dt filter compact plus Voltage Peak Limiter

dv/dt filters compact plus VPL (**V**oltage **P**eak **L**imiter) limit the voltage rate of rise *dv/dt* to values of < 1600 V/µs and the typical peak voltage to the following values in accordance with the limit value curve A according to IEC 60034-25: 2007:

- < 1150 V at U_{line} < 575 V
- < 1400 V at 660 V < U_{line} < 690 V

The dv/dt filter compact plus VPL functionally consists of two components that are supplied as a compact mechanical unit, the dv/dt reactor and the voltage limiting network (VPL), which limits voltage peaks and feeds back the energy to the DC link.

It is so compact that it can be completely integrated into the cabinet, even for high power ratings. An additional cabinet is not required.

By using a dv/dt filter compact plus VPL, standard motors with standard insulation and without insulated bearings can be used with supply voltages up to 690 V in converter operation.

The power losses stated in Section System components → Motor-side components → dv/dt filter compact plus VPL can be used to determine the total losses for engineering purposes.

dv/dt filters compact plus VPL are designed for the following maximum motor cable lengths:

- Shielded cables 100 m (e.g. Protodur NYCWY)
- Unshielded cables 150 m (e.g. Protodur NYY)

For longer cable lengths (> 100 m shielded, >150 m unshielded), the dv/dt filter plus VPL (option **L10**) should be used.

Notice:

- Operation with output frequencies <10 Hz is permissible for max. 5 min.
- The maximum permissible output frequency is 150 Hz.

When using dv/dt filters, restrictions regarding permissible pulse frequencies must be observed.

For additional information, please refer to the SINAMICS Low Voltage Engineering Manual.

Note:

Option **L07** cannot be combined with the following options:

- **L08** (motor reactor)
- **L10** (dv/dt filter plus VPL)
- **L15** (sine-wave filter)
- **M78** (motor connection from above)

L08
Motor reactor

Motor reactors reduce the voltage load on the motor windings by reducing the voltage gradients at the motor terminals that occur during converter operation. At the same time, the capacitive charge/discharge currents that place an additional load on the converter output when using long motor cables, are reduced.

The maximum permissible output frequency when a motor reactor is used is 150 Hz.

The power losses stated in Section System components → Motor-side components → Motor reactors can be used to determine the total losses for engineering purposes.

Note:

Option **L08** cannot be combined with the following options:

- **L07** (dv/dt filter compact plus VPL)
- **L10** (dv/dt filter plus VPL)
- **L15** (sine-wave filter)
- **M78** (motor connection from above)

L10
dv/dt filter plus Voltage Peak Limiter

A dv/dt filter plus VPL (**V**oltage **P**eak **L**imiter) limits the voltage rate of rise *dv/dt* to values < 500 V/µs and the typical peak voltage to the following values in accordance with the limit value curve according to IEC/TS 60034-17: 2006:

- < 1000 V at U_{line} < 575 V
- <1250 V at 660 V < U_{line} < 690 V

The dv/dt filter plus VPL functionally consists of two components, the dv/dt reactor and the voltage limiting network (VPL), which limits voltage peaks and feeds the energy back to the DC link.

Depending on the converter power, option **L10** can be accommodated in the converter cabinet unit or an additional cabinet is required with a width of 400 mm or 600 mm.

Voltage range	**Installation of the dv/dt filter plus VPL**		
	in the converter (without additional cabinet)	in the additional cabinet	
		400 mm wide	600 mm wide
380 ... 480 V	110 ... 250 kW	315 ... 450 kW	560 ... 800 kW
500 ... 690 V	75 ... 315 kW	400 ... 560 kW	710 ... 1200 kW

By using a dv/dt filter plus VPL, standard motors with standard insulation and without insulated bearings can be used with supply voltages up to 690 V in converter operation.

dv/dt filters plus VPL are designed for the following maximum motor cable lengths:

- Shielded cables 300 m (e.g. Protodur NYCWY)
- Unshielded cables: 450 m (e.g. Protodur NYY)

For cable lengths < 100 m shielded or < 150 m unshielded, the dv/dt filter compact plus VPL (option **L07**) can be used advantageously.

The power losses stated in Section System components → Motor-side components → dv/dt filter plus VPL can be used to determine the total losses for engineering purposes.

Notice:

The maximum permissible output frequency is 150 Hz.

When using dv/dt filters, restrictions regarding permissible pulse frequencies must be observed.

For additional information, please refer to the SINAMICS Low Voltage Engineering Manual.

Note:

Parts of option **L10** do not have nickel-plated copper busbars.

Option **L10** cannot be combined with the following options:

- **L07** (dv/dt filter compact plus VPL)
- **L08** (motor reactor)
- **L15** (sine-wave filter)
- **M78** (motor connection from above)

© Siemens 2024

Options

L15
Sine-wave filter

Sine-wave filters are available for converters with a power rating of up to 250 kW (380 V to 480 V). The sine-wave filter at the converter output supplies almost perfect sinusoidal voltages at the motor so that standard motors can be used without special cables or power derating. Standard cables can be used to connect the motor. The max. permissible motor cable length is limited to 300 m.

The power losses stated in Section System components → Motor-side components → Sine-wave filter can be used to determine the total losses for engineering purposes.

Note:
In conjunction with the option **L15**, the pulse frequency of the converter must be increased. This reduces the power available at the converter output (derating factor 0.88). The modulation depth of the output voltage decreases to approx. 85% (380 V to 480 V). The maximum output frequency is 150 Hz. It should be noted that the reduced voltage at the motor terminals compared with the rated motor voltage means that the motor switches to field weakening mode earlier.

Note:

Option **L15** cannot be combined with the following options:

- **L07** (dv/dt filter compact plus VPL)
- **L08** (motor reactor)
- **L10** (dv/dt filter plus VPL)
- **M78** (motor connection from above)

L19
Connection for external auxiliary equipment

An outgoing feeder fused with max. 10 A for external auxiliary equipment (for example, separately driven motor fan).

The voltage is tapped at the converter input upstream of the main contactor / circuit breaker and, therefore, has the same level as the supply voltage.

The outgoing feeder can be switched inside the converter or externally.

Terminal -X155:	Meaning	Range
1	L1	380 ... 690 V AC
2	L2	380 ... 690 V AC
3	L3	380 ... 690 V AC
11	Contactor control	230 V AC
12	Contactor control	230 V AC
13	Feedback signal, circuit breaker	230 V AC/0.5 A; 24 V DC/2 A
14	Feedback signal, circuit breaker	230 V AC/0.5 A; 24 V DC/2 A
15	Feedback signal, contactor	230 V AC/6 A
16	Feedback signal, contactor	230 V AC/6 A
PE	PE	–

For more information on configuring, see:
https://support.industry.siemens.com/cs/document/104961375

L21
Surge suppression

In ungrounded IT systems, the line voltage is not permanently connected to the ground potential because of the missing ground connection of the supply network. Therefore, when a ground fault occurs during operation, a voltage against ground increased by a factor of 2 can occur. For this reason, it is recommended that a surge suppression against ground be installed for operation on IT systems. The surge suppression option includes the installation of line-side surge arresters and upstream fuses for each system phase. The signaling contacts for monitoring the surge arresters are connected in series and connected to a customer interface.

Note:

Option **L21** does not include the components required to install an insulation monitor for the IT system. An insulation monitor should always be ordered separately as option **L87** when the supplying IT system is not monitored at another position (e.g. at the transformer outgoing feeder). Only one insulation monitor can ever be used within the same electrically connected network.

Option **L21** also does not include removal in the factory of the metal bracket that makes the connection to ground of the radio interference suppression filter installed as standard. The metal bracket should therefore be removed during installation or commissioning of the converter if the device is to be operated on an ungrounded IT system.

L26
Main switch incl. fuses or circuit breakers

Up to 800 A a switch disconnector with fuses is available as the main switch. For currents greater than 800 A, a circuit breaker provided as standard is used to isolate the drive system from the line supply. The circuit breaker is controlled and supplied within the converter.

Terminal -X50:	Meaning
1	Checkback contact (NO contact) Main breaker/circuit breaker closed
2	Checkback contact (NC contact) Main breaker/circuit breaker closed
3	Common potential

L40
Line filter monitoring

With option **L40**, the filter in the Active Interface Module is monitored for effectiveness against harmonic effects on the system.

The capacitance of the filter capacitors of the integrated filter is continuously calculated and compared with the installed nominal capacitance by measuring the current and voltage in the Active Interface Module. If the calculated capacity deviates by more than the set tolerance, an alarm is triggered.

© Siemens 2024

Options

L45
EMERGENCY OFF pushbutton, installed in the cabinet door

The option **L45** only includes the EMERGENCY OFF pushbutton which is fitted with a protective collar in the cabinet door of the converter. The contacts of the pushbutton are brought out and connected to a terminal strip.

The EMERGENCY OFF and/or EMERGENCY STOP functions of Category 0 or 1 can be activated in conjunction with options **L57, L59**, and **L60**.

Terminal -X120:	Meaning
1	Checkback contact of the EMERGENCY OFF pushbutton in the cabinet door
2	Checkback contact of the EMERGENCY OFF pushbutton in the cabinet door
3	Checkback contact of the EMERGENCY OFF pushbutton in the cabinet door [1]
4	Checkback contact of the EMERGENCY OFF pushbutton in the cabinet door [1]

Notice:
By pressing the EMERGENCY OFF pushbutton, the motor is stopped either uncontrolled or controlled depending on the selected stop Category 0 or 1, and the main voltage disconnected from the motor, in compliance with IEC 60204-1 (VDE 0113). Auxiliary voltages such as the supply for an external fan or anti-condensation heating may still be present. Certain areas within the converter also remain live (under voltage), such as the control or auxiliary equipment. If complete disconnection of all voltages is required, the EMERGENCY OFF pushbutton must be incorporated into a protective system to be implemented by the customer. For this purpose, an NC contact is provided at terminal -X120.

L50
Cabinet lighting with service socket

With option **L50**, cabinet lighting is included with an additional service socket for a SCHUKO connector (connector type F) according to CEE 7/4. The power supply for the cabinet lighting and the service socket is external and must be fuse-protected for max. 10 A.

The cabinet lighting consists of an LED hand lamp with On/Off switch and with magnetic fasteners with an approx. 3 m long connecting cable. The lamp is factory-positioned in the cabinet door at a defined marking, and the connecting cable is wound on the associated mount.

L55
Cabinet anti-condensation heating

The anti-condensation heating is recommended at low ambient temperatures and high levels of humidity to prevent condensation. A 100 W cabinet heater is installed in each cabinet section (two heaters are installed per cabinet with cabinet section widths of between 800 mm and 1200 mm).

The power supply for the anti-condensation heating (110 V to 230 V AC, at terminal strip -X240) must be provided externally and fused with max. 16 A.

Terminal -X240:	Meaning
1	L1 (110 ... 230 V AC)
2	N
3	PE

L57
EMERGENCY OFF Category 0

EMERGENCY OFF Category 0 for uncontrolled stopping according to EN 60204-1.

The function includes disconnecting the voltage at the converter by means of the line contactor and bypassing the microprocessor controller using a safety combination according to EN 60204-1. The motor then coasts down.

Terminal -X120:	Meaning
7	Loop in the EMERGENCY OFF pushbutton from the plant side; remove jumper 7-8!
8	Loop in the EMERGENCY OFF pushbutton from the plant side; remove jumper 7-8!
15	"ON" for monitored start; remove jumper 15-16!
16	"ON" for monitored start; remove jumper 15-16!
17	Checkback signal, "Safety combination has tripped"
18	Checkback signal, "Safety combination has tripped"

L59
EMERGENCY STOP Category 1, 230 V AC

EMERGENCY STOP Category 1 for controlled stopping according to EN 60204-1.

The function stops the drive using a fast stop along a down ramp that is parameterized by the user. The voltage is then disconnected as described for EMERGENCY OFF Category 0 (option **L57**).

In order to maintain the specified stopping times, it may be necessary to use a braking unit.

Terminal -X120:	Meaning
7	Loop in the EMERGENCY OFF pushbutton from the plant side; remove jumper 7-8!
8	Loop in the EMERGENCY OFF pushbutton from the plant side; remove jumper 7-8!
15	"ON" for manual start; remove jumper 15-16!
16	"ON" for manual start; remove jumper 15-16!
17	Checkback signal, "Safety combination has tripped"
18	Checkback signal, "Safety combination has tripped"

[1] For option **L57** to **L60** is preassigned in the converter.

© Siemens 2024

Options

L60
EMERGENCY STOP Category 1, 24 V DC

EMERGENCY STOP Category 1 for controlled stopping according to EN 60204-1.

The function stops the drive using a fast stop along a down ramp that is parameterized by the user. The voltage is then disconnected as described for EMERGENCY OFF Category 0 (option **L57**).

In order to maintain the specified stopping times, it may be necessary to use a braking unit.

Terminal -X120:	Meaning
7	Loop in the EMERGENCY OFF pushbutton from the plant side; remove jumper 7-8!
8	Loop in the EMERGENCY OFF pushbutton from the plant side; remove jumper 7-8!
15	"ON" for manual start; remove jumper 15-16!
16	"ON" for manual start; remove jumper 15-16!
17	Checkback signal, "Safety combination has tripped"
18	Checkback signal, "Safety combination has tripped"

L61, L62, L64, L65
Braking units

Braking units may be required for drives in which motors might operate in generator mode, but have no facility for feeding energy back into the supply system.

The braking unit comprises two components:

- A Braking Module that can be installed in the air discharge of the chassis format power units
- A braking resistor to be mounted externally (degree of protection IP20)

The braking unit functions as an autonomous unit, and does not require an external power supply. During the braking process, the kinetic energy is converted into heat in the externally mounted braking resistor.

A max. cable length of 100 m is permissible between the Braking Module and the braking resistor. This allows the braking resistor to be mounted externally so that heat losses can be dissipated outside the converter enclosure. The braking resistor is connected directly to the terminal -X5 of the converter.

The following braking units are available for SINAMICS S150 converter cabinet units:

Option	SINAMICS S150 converter	**Braking Module**		
	Type rating	Rated power P_{DB}	Braking power P_{20}	Peak power P_{15}
	kW	kW	kW	kW
380 ... 480 V 3 AC				
L61	110 ... 132	25	100	125
L62	160 ... 800	50	200	250
500 ... 600 V 3 AC				
L64	75 ... 132	25	100	125
L65	160 ... 1200	50	200	250
660 ... 690 V 3 AC				
L61	75 ... 132	25	100	125
L62	160 ... 1200	50	200	250

P_{DB} = Rated power (continuous braking power)

$P_{20} = 4 \times P_{DB}$: 20 s power referred to a braking interval of 90 s

$P_{15} = 5 \times P_{DB}$: 15 s power referred to a braking interval of 90 s

If more braking power is required than provided by the braking units listed here, then braking units may be connected in parallel for higher converter outputs (on request). In this case, a Braking Module is assigned to each braking resistor.

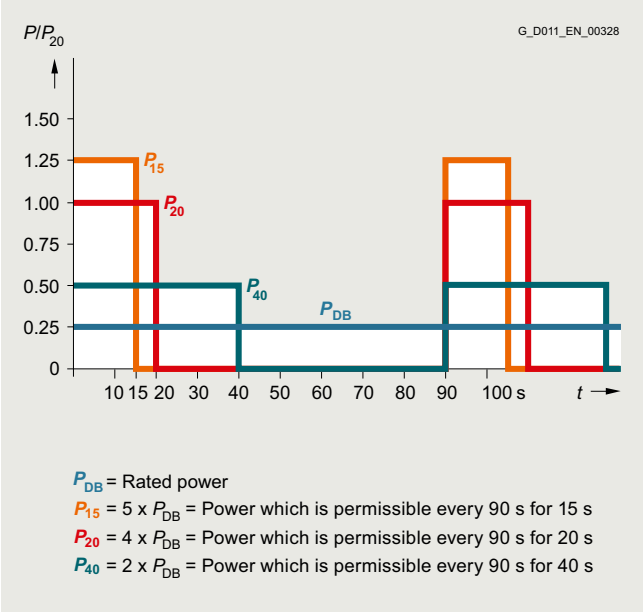

Load diagram for Braking Modules and braking resistors

Additional notes about possible duty cycles of the braking resistors and other engineering notes are included in the SINAMICS Low Voltage Engineering Manual.

© Siemens 2024

Options

L83
Thermistor motor protection device (alarm)

Thermistor motor protection device for PTC thermistors (PTC resistors, type A) for alarm. The thermistor motor protection device is supplied with power and evaluated internally in the converter.

Terminal -B127:	Meaning
T1	Sensor circuit connection
T2	Sensor circuit connection

L84
Thermistor motor protection device (trip)

Thermistor motor protection device for PTC thermistors (PTC resistors, type A) for trip. The thermistor motor protection device is supplied with power and evaluated internally in the converter.

Terminal -B125:	Meaning
T1	Sensor circuit connection
T2	Sensor circuit connection

L86
Pt100 evaluation unit

The Pt100 evaluation unit can monitor up to six sensors. The sensors can be connected in a two or three-wire system. The limit values can be freely programmed for each channel.

In the factory setting, the measuring channels are subdivided into two groups, each with 3 channels. With motors, for example, this means that three Pt100s in the stator windings and two Pt100s in the motor bearings can be monitored. Unused channels can be hidden via parameters.

The output relays are integrated into the internal fault and shutdown sequence of the converter.

L87
Insulation monitoring

An insulation monitor must be used if the converter is connected to an ungrounded line supply. The device monitors the entire galvanically coupled circuit for insulation faults.

An alarm is output in the event of a fault.

The **L87** option includes the factory removal of the metal bracket that connects the standard radio interference suppression filter to the ground. The metal bracket is removed from the respective Line Module and enclosed with the cabinet unit.

Notice:

Only **one** insulation monitor can be used in each galvanically coupled network.

As there are different response strategies when a ground fault occurs in an ungrounded system, output relays of the insulation monitor are provided for integration in a plant-side control. The customer can also choose to integrate the outputs into the converter monitoring system.

M06
Base 100 mm high, RAL 7022

The additional cabinet base allows larger bending radii for cables (cable inlet from below) and enables them to be routed within the cabinet base.

The cabinet base is supplied in RAL 7022 as standard. A special paint finish is not available for the base. It is delivered completely assembled with the cabinet. The height of the operator panel changes accordingly.
Combination with option **M66** is not possible.

M07
Cable marshaling space 200 mm high, RAL 7035

The cable marshaling space is made of strong sheet steel and allows cables to be connected more flexibly (entry from below). It also allows routing of cables within the marshaling space. It is delivered completely assembled with the cabinet. The height of the operator panel changes accordingly.

Notice:
The cable marshaling space is painted as standard with RAL 7035. If a special color is requested for the cabinet (option **Y09**), the cable marshaling space is also painted in this color.
Combination with option **M66** is not possible.

M13
Line connection from above

The control cabinet is provided with an additional roof section to allow a line connection from above. The connection lugs for the power cables, the clamping bar for mechanically securing the cables, an EMC shield bus, and a PE busbar are located within this roof section.

This increases the cabinet height by 405 mm. The busbars for the connection from above are delivered completely pre-installed. For transport reasons, the roof sections are delivered separately and must be fitted on site. Crane transport assemblies (option **M90**) can still be used. However, they must be removed on site before the roof sections can be installed. Use of rope spreaders should be considered in the case of small crane hook heights.

An undrilled aluminum mounting plate (5 mm thick) is provided in the roof section for feeding in the cables. Depending on the number of cables and the cross-sections used, holes for attaching cable glands for feeding in the cables must be drilled in this mounting plate on site.

Note:
The control cables are still connected from below. Option **M13** eliminates the lugs, provided as standard, to connect the line supply from below.

The degree of protection of the roof sections is IP21. In combination with options **M23**, **M43** and **M54**, additional plastic ventilation grilles and filter elements are provided.

Notice:
The roof sections are painted in RAL 7035 as standard. If a special color is requested for the cabinet (option **Y09**), the roof section is also painted in this color. Ventilation grilles used with degrees of protection IP23 and IP54 have color RAL 7035 and cannot be painted.

The covers provided with option **M60** are also included in the scope of supply.

© Siemens 2024

Options

M21
Degree of protection IP21

Cabinet version in IP20, but with additional top cover or canopy. This increases the cabinet height by 250 mm.

For transport reasons, the top covers or canopies are delivered separately and must be fitted on site.

Notice:

The top covers or canopies are painted in RAL 7035 as standard. If a special color is requested for the cabinet (option **Y09**), the top covers or canopies are also painted in this color.

M23
Degree of protection IP23

Converter cabinet units with degree of protection IP23 are supplied with additional roof sections as well as plastic ventilation grilles and a filter medium in the air inlet and outlet. This increases the cabinet height by 400 mm. The covers provided with option **M60** are also included in the scope of supply. The filter medium must be maintained according to the local environmental conditions.

For transport reasons, the roof sections are delivered separately and must be fitted on site.

Notice:
The roof sections are painted in RAL 7035 as standard.
If a special color is requested for the cabinet (option **Y09**), the roof section is also painted in this color. The molded plastic parts (e.g. ventilation grilles) are in RAL 7035 and cannot be painted.

M43
Degree of protection IP43

Converter cabinet units with IP43 degree of protection are supplied with additional roof sections as well as plastic ventilation grilles and a wire mesh in the air inlet and outlet. This increases the cabinet height by 400 mm. The covers provided with option **M60** are also included in the scope of supply. They are an integral component of the internal cabinet air guidance system and are adapted accordingly.

For transport reasons, the roof sections are delivered separately and must be fitted on site.

Notice:
The roof sections are painted in RAL 7035 as standard.
If a special color is requested for the cabinet (option **Y09**), the roof section is also painted in this color. The molded plastic parts (e.g. ventilation grilles) are in RAL 7035 and cannot be painted.

M54
Degree of protection IP54

Converter cabinet units with IP54 degree of protection are supplied with additional roof sections as well as plastic ventilation grilles and a filter medium in the air inlet and outlet. This increases the cabinet height by 400 mm. The covers provided with option **M60** are also included in the scope of supply. They are an integral component of the internal cabinet air guidance system and are adapted accordingly. The filters must be maintained according to the local environmental conditions.

For transport reasons, the roof sections are delivered separately and must be fitted on site.

Notice:

- The roof sections are painted in RAL 7035 as standard.
  If a special color is requested for the cabinet (option **Y09**), the roof section is also painted in this color. The molded plastic parts (e.g. ventilation grilles) are in RAL 7035 and cannot be painted.
- For units with IP54 degree of protection, it is important to observe the derating factor for output currents in relation to ambient temperature and installation altitude.

M60
Additional touch protection

The converter cabinet units are designed as standard according to DGUV regulation 3. Option **M60** provides additional covers (outside arm's reach) in the vicinity of the AC busbars and above the power unit (can only be selected as an option with converters up to 250 kW in the 400 V range and with converters up to 315 kW in the 690 V range with degrees of protection IP20 and IP21; otherwise supplied as standard).

M66
Marine version

For compliance with the requirements of the classification institutes:

- Lloyds Register
- American Bureau of Shipping
- Germanischer Lloyd
- Bureau Veritas
- Det Norske Veritas
- China Classification Society

This option includes a strengthened mechanical version of the cabinet, handles (handrail) below the operator panel and mechanical locking of the cabinet doors. The cabinet has degree of protection IP23 (option **M23**) and includes a cabinet anti-condensation heater (option **L55**). To secure the converter to the ship's hull, a welding frame (5 mm high) is supplied separately.

Note:
Combination with options **M21**, **M23**, and **L55** is not possible. Individual certification is additionally required if the converter is used for a safety-related drive on the ship
(see options E21 to E71).

© Siemens 2024

Options

M70
EMC shield bus (cable connection from below)

The EMC shield bus is used to connect shielded power cables for line and motor supply cables.

With the options **M13** and **M78**, the EMC shield bus is already included as standard for the connection busbars underneath the roof section.
With the option **L00** (RFI suppression filter), the EMC shield bus is also included as standard.

M78
Motor connection from above

The control cabinet is provided with an additional roof section for a motor connection from above. The connection lugs for the power cables, the clamping bar for mechanically securing the cables, an EMC shield bus, and a PE busbar are located within this roof section.

This increases the cabinet height by 405 mm. The busbars for the connection from above are delivered completely pre-installed. For transport reasons, the roof sections are delivered separately and must be fitted on site. Crane transport assemblies (option **M90**) can still be used. However, they must be removed on site before the roof sections can be installed. Use of rope spreaders should be considered in the case of small crane hook heights.

An undrilled aluminum mounting plate (5 mm thick) is provided in the roof section for feeding in the cables. Depending on the number of cables and the cross-sections used, holes for attaching cable glands for feeding in the cables must be drilled in this mounting plate on site.

Note:
The control cables are still connected from below. Option **M78** eliminates the lugs, provided as standard, to connect the motor from below.

The degree of protection of the roof sections is IP21.
In combination with options **M23**, **M43** and **M54**, additional plastic ventilation grilles and filter elements are provided.

Notice:
The roof sections are painted in RAL 7035 as standard.
If a special color is requested for the cabinet (option **Y09**), the roof section is also painted in this color. Ventilation grilles used with IP23, IP43 and IP54 degrees of protection are in RAL 7035 and cannot be painted.

The covers provided with option **M60** are also included in the scope of supply.

Note:
Option **M78** cannot be combined with the following options:

- **L07** (dv/dt filter compact plus VPL)
- **L08** (motor reactor)
- **L10** (dv/dt filter plus VPL)
- **L15** (sine-wave filter)

M90
Crane transport assembly (top-mounted)

For single cabinets up to a width of 600 mm, the crane transport assembly consists of transport eyebolts. For cabinet widths of 800 mm and wider, transport rails are used.

M91
Marking of all control cable conductor ends

When this option is selected, all control cables or conductor ends (including all customer-specific options) are labeled throughout the cabinet.

T58, T60, T80, T83, T85, T91
Rating plate data

The rating plate is provided in English/German as standard.
A rating plate in another language combination can be selected by specifying the following option order codes.

Option	Rating plate language
T58	English/French
T60	English/Spanish
T80	English/Italian
T83	English/Portuguese (Brazil)
T85	English/Russian
T91	English/Chinese

Y09
Special cabinet paint finish

The converter cabinet units are delivered in RAL 7035 as standard. The special paint finish must be specified in plain text when ordering. All RAL colors which are available as powder coatings can be selected. Other special colors on request.

Notice:
If options such as cable marshaling space (option **M07**), top covers or canopies (option **M21**), roof sections (options **M23/M43/M54**) or cable connection from above (options **M13/M78**) are ordered for the converter cabinet units, they will also be supplied in the paint finish specified for the cabinet in the order. The molded plastic parts (e.g. ventilation grilles) are in RAL 7035 and cannot be painted.

© Siemens 2024

Options

Y31
One-line label for system identification, 40 × 80 mm

Resopal labels (white with black lettering) for identifying the control cabinets are available. The labels are stuck to the cabinet door.

Dimensions H × W: 40 × 80 mm

The text must be specified in plain text when ordering.

Field 1: Max. 9 characters, font size 10 mm

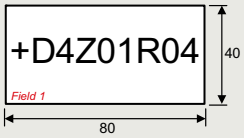

Y32
Two-line label for system identification, 40 × 180 mm

Resopal labels (white with black lettering) for identifying the control cabinets are available. The labels are stuck to the cabinet door.

Dimensions H × W: 40 × 180 mm

The text must be specified in plain text when ordering.

Field 1: Max. 9 characters, font size 10 mm
Field 2: Max. 9 characters, font size 10 mm
Field 3: Max. 20 characters, font size 10 mm

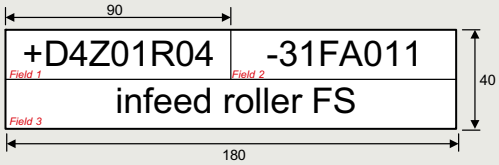

Y33
Four-line label for system identification, 40 × 180 mm

Resopal labels (white with black lettering) for identifying the control cabinets are available. The labels are stuck to the cabinet door.

Dimensions H × W: 40 × 180 mm

The text must be specified in plain text when ordering.

Field 1: Max. 9 characters, font size 10 mm
Field 2: Max. 20 characters, font size 6 mm
Field 3: Max. 20 characters, font size 6 mm
Field 4: Max. 20 characters, font size 6 mm
Field 5: Max. 20 characters, font size 6 mm

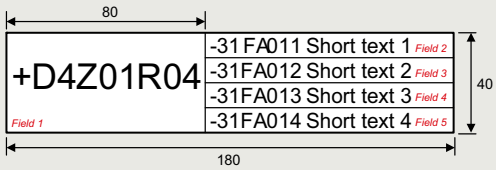

© Siemens 2024

Line-side components - recommended fuses

Overview

The fuses specified below are the recommended types for protecting the unit on the low-voltage distribution panel. If option **L26** was selected for SINAMICS S150 with rated input currents <800 A, then the semiconductor protection is already integrated in the unit. For units of >800 A, this function is performed by the circuit breaker provided as standard.

In this case, a 3NA fuse can be used in the distribution board. If option **L26** has not been selected for units <800 A, we strongly advise that 3NE fuses are used [1].

Catalog LV 10 contains additional information on the listed fuses.

Type rating at 400 V or 690 V		SINAMICS S150 converter	Cable protection fuse in systems with a fuse switch disconnector			Cable protection fuse (incl. semiconductor protection) in systems without fuse switch disconnector		
At I_L, 50 Hz 400 V, 500 V or 690 V	At I_L, 60 Hz 460 V or 575 V			Rated current	Size according to DIN 43620-1		Rated current	Size according to DIN 43620-1
kW	hp	6SL3710-...	Article No.	A		Article No.	A	
Line voltage 380 ... 480 V 3 AC								
110	150	7LE32-1AA3	**3NA3252**	315	2	**3NE1230-2**	315	1
132	200	7LE32-6AA3	**3NA3254**	355	2	**3NE1331-2**	350	2
160	250	7LE33-1AA3	**3NA3365**	500	3	**3NE1334-2**	500	2
200	300	7LE33-8AA3	**3NA3365**	500	3	**3NE1334-2**	500	2
250	400	7LE35-0AA3	**3NA3372**	630	3	**3NE1436-2**	630	3
315	500	7LE36-1AA3	**3NA3475**	800	4	**3NE1438-2**	800	3
400	600	7LE37-5AA3	**3NA3475**	800	4	**3NE1448-2**	850	3
450	700	7LE38-4AA3	–	–	–	Circuit breaker included as standard		
560	800	7LE41-0AA3	–	–	–	Circuit breaker included as standard		
710	1000	7LE41-2AA3	–	–	–	Circuit breaker included as standard		
800	1000	7LE41-4AA3	–	–	–	Circuit breaker included as standard		
Line voltage 500 ... 690 V 3 AC								
75	75	7LG28-5AA3	**3NA3132-6**	125	1	**3NE1022-2**	125	00
90	75	7LG31-0AA3	**3NA3132-6**	125	1	**3NE1022-2**	125	00
110	100	7LG31-2AA3	**3NA3136-6**	160	1	**3NE1224-2**	160	1
132	150	7LG31-5AA3	**3NA3240-6**	200	2	**3NE1225-2**	200	1
160	150	7LG31-8AA3	**3NA3244-6**	250	2	**3NE1227-2**	250	1
200	200	7LG32-2AA3	**3NA3252-6**	315	2	**3NE1230-2**	315	1
250	250	7LG32-6AA3	**3NA3354-6**	355	3	**3NE1331-2**	350	2
315	300	7LG33-3AA3	**3NA3365-6**	500	3	**3NE1334-2**	500	2
400	400	7LG34-1AA3	**3NA3365-6**	500	3	**3NE1334-2**	500	2
450	450	7LG34-7AA3	**3NA3352-6**	2 × 315	2	**3NE1435-2**	560	3
560	600	7LG35-8AA3	**3NA3354-6**	2 × 355	3	**3NE1447-2**	670	3
710	700	7LG37-4AA3	**3NA3365-6**	2 × 500	3	**3NE1448-2**	850	3
800	800	7LG38-1AA3	–	–	–	Circuit breaker included as standard		
900	900	7LG38-8AA3	–	–	–	Circuit breaker included as standard		
1000	1000	7LG41-0AA3	–	–	–	Circuit breaker included as standard		
1200	1250	7LG41-3AA3	–	–	–	Circuit breaker included as standard		

[1] The double-function fuses (3NE1.) for cable and semiconductor protection are recommended to protect the converter. These fuses are specially adapted to the requirements of the semiconductors in the input rectifier.
- Super fast
- Lower arc voltage
- Improved current limiting (lower let-through values).

© Siemens 2024

Overview

The following tables list the recommended and maximum connectable line and motor-side cable cross-sections and connections for a single connection.

The recommended cross-sections are based on the specified fuses. They are valid for a three-conductor copper cable routed horizontally in air with PVC insulation and a permissible conductor temperature of 70 °C (e.g. Protodur NYY or NYCWY) at an ambient temperature of 40 °C and individual routing. For deviating conditions (cable routing, cable accumulation, ambient temperature), the appropriate correction factors according to IEC 60364-5-52 must be taken into account.

For additional information, please refer to the SINAMICS Low Voltage Engineering Manual.

Type rating at 400 V or 690 V	SINAMICS S150 converter cabinet unit	Line supply connection			Motor connection			Cabinet grounding	
		Recom-mended cross-section [1]	Maximum conductor cross-section	M12 fixing screw	Recom-mended cross-section [1]	Maximum conductor cross-section	M12 fixing screw	M12 fixing screw	Remarks
		IEC	IEC	(Number of holes)	IEC	IEC	(Number of holes)	(Number of holes)	
kW	6SL3710-...	mm^2	mm^2		mm^2	mm^2			
380 … 480 V 3 AC									
110	7LE32-1AA3	2 × 70	4 × 240	(2)	2 × 50	2 × 150	(2)	(2)	
132	7LE32-6AA3	2 × 95	4 × 240	(2)	2 × 70	2 × 150	(2)	(2)	
160	7LE33-1AA3	2 × 120	4 × 240	(2)	2 × 95	2 × 150	(2)	(2)	
200	7LE33-8AA3	2 × 120	4 × 240	(2)	2 × 95	2 × 150	(2)	(2)	
250	7LE35-0AA3	2 × 185	4 × 240	(2)	2 × 150	2 × 240	(2)	(2)	
315	7LE36-1AA3	2 × 240	4 × 240	(2)	2 × 185	4 × 240	(2)	(2)	
400	7LE37-5AA3	3 × 185	4 × 240	(2)	2 × 240	4 × 240	(2)	(10)	Cu bar
450	7LE38-4AA3	4 × 150	8 × 240	(4)	3 × 185	4 × 240	(2)	(16)	Cu bar
560	7LE41-0AA3	4 × 185	8 × 240	(4)	4 × 185	6 × 240	(3)	(18)	Cu bar
710	7LE41-2AA3	4 × 240	8 × 240	(4)	4 × 240	6 × 240	(3)	(18)	Cu bar
800	7LE41-4AA3	6 × 185	8 × 240	(4)	6 × 185	6 × 240	(3)	(18)	Cu bar
500 … 690 V 3 AC									
75	7LG28-5AA3	50	4 × 240	(2)	35	2 × 70	(2)	(2)	
90	7LG31-0AA3	50	4 × 240	(2)	50	2 × 150	(2)	(2)	
110	7LG31-2AA3	70	4 × 240	(2)	70	2 × 150	(2)	(2)	
132	7LG31-5AA3	95	4 × 240	(2)	70	2 × 150	(2)	(2)	
160	7LG31-8AA3	120	4 × 240	(2)	95	2 × 150	(2)	(2)	
200	7LG32-2AA3	2 × 70	4 × 240	(2)	120	2 × 150	(2)	(2)	
250	7LG32-6AA3	2 × 95	4 × 240	(2)	2 × 70	2 × 185	(2)	(2)	
315	7LG33-3AA3	2 × 120	4 × 240	(2)	2 × 95	2 × 240	(2)	(2)	
400	7LG34-1AA3	2 × 185	4 × 240	(2)	2 × 120	4 × 240	(2)	(2)	
450	7LG34-7AA3	2 × 185	4 × 240	(2)	2 × 150	4 × 240	(2)	(2)	
560	7LG35-8AA3	2 × 240	4 × 240	(2)	2 × 185	4 × 240	(2)	(2)	
710	7LG37-4AA3	3 × 185	8 × 240	(4)	3 × 150	6 × 240	(3)	(18)	Cu bar
800	7LG38-1AA3	4 × 150	8 × 240	(4)	3 × 185	6 × 240	(3)	(18)	Cu bar
900	7LG38-8AA3	4 × 150	8 × 240	(4)	4 × 150	6 × 240	(3)	(18)	Cu bar
1000	7LG41-0AA3	4 × 185	8 × 240	(4)	4 × 185	6 × 240	(3)	(18)	Cu bar
1200	7LG41-3AA3	4 × 240	8 × 240	(4)	4 × 240	6 × 240	(3)	(18)	Cu bar

[1] The recommendations for the North American market in AWG or MCM must be taken from the appropriate NEC (National Electrical Code) and CEC (Canadian Electrical Code) standards.

© Siemens 2024

Overview

Cable cross-sections for line and motor connection

It is generally recommended to use shielded 3-conductor three-phase cables between the converter and motor – and for higher power ratings, symmetrical cables where possible. If required, several of these cables can be connected in parallel. There are two main reasons for this:

- Only then can the high IP55 degree of protection at the motor terminal box be easily achieved. The reason for this is that cables are routed into the terminal box through glands, and the number of possible glands is restricted by the terminal box geometry. Therefore single cables are less suitable.
- With symmetrical 3-wire three-phase cables, the summed ampere-turns over the cable outer diameter are equal to zero. They can easily be routed in conductive, metal cable ducts or racks without any significant currents (ground current or leakage current) being induced in these conductive, metal connections. The danger of induced leakage currents and thus of increased cable sheath losses is significantly higher with single-conductor cables.

The cable cross-section required depends on the current being conducted in the cable. The permissible current load capability of cables is defined, for example in IEC 60364-5-52. It depends partly on the ambient conditions such as temperature, but also on the routing method. It should be taken into account whether cables are individually routed with relatively good cooling, or whether several cables are routed together; in this case, cable ventilation is significantly poorer, which can therefore result in higher cable temperatures. Regarding this topic, reference is made to the corresponding correction factors for these secondary conditions in IEC 60364-5-52.

For 3-conductor copper and aluminum cables with PVC insulation and a permissible conductor temperature of 70 °C (e.g. Protodur NYY or NYCWY), as well as an ambient temperature of 40 °C, the cross-sections can be determined from the following table, which is based on IEC 60364-5-52.

Cross-section of 3-conductor cable	**Copper cable**		**Aluminum cable**	
	Individual routing	Several cables next to one another [1]	Individual routing	Several cables next to one another [1]
mm²	A	A	A	A
3 × 2.5	22	17	17	13
3 × 4.0	30	23	23	18
3 × 6.0	37	29	29	22
3 × 10	52	41	40	31
3 × 16	70	54	53	41
3 × 25	88	69	68	53
3 × 35	110	86	84	65
3 × 50	133	104	102	79
3 × 70	171	133	131	102
3 × 95	207	162	159	124
3 × 120	240	187	184	144
3 × 150	278	216	213	166
3 × 185	317	247	244	190
3 × 240	374	292	287	224

Current-carrying capacity according to IEC 60364-5-52 at 40 °C

Cables must be connected in parallel for higher currents.

Note:
The recommendations for the North American market in AWG or MCM must be taken from the appropriate NEC (National Electrical Code) and CEC (Canadian Electrical Code) standards.

Grounding and protective conductor cross-section

The protective conductor must be dimensioned taking into account the following data:

- In the case of a ground fault, no impermissibly high contact voltages resulting from voltage drops on the PE conductor caused by the ground fault current may occur (< 50 V AC or < 120 V DC, IEC 61800-5-1, IEC 60364, IEC 60543).
- The protective conductor must not be excessively loaded by any ground fault current it carries.
- If it is possible for continuous currents to flow through the protective conductor when a fault occurs, then the protective conductor cross-section must be dimensioned for this continuous current.
- The protective conductor cross-section must be selected according to EN 60204-1, EN 60439-1, IEC 60364.

Cross-section, line conductor	Minimum cross-section, external protective conductor
mm²	mm²
up to 16	Minimum cross-section of line conductor
16 ... 35	16
from 35	Minimum half the cross-section of line conductor

Note:
The recommendations for the North American market in AWG or MCM must be taken from the appropriate NEC (National Electrical Code) and CEC (Canadian Electrical Code) standards.

- Switchgear and motors are usually grounded separately via a local grounding electrode. With this constellation, the ground fault current flows via the parallel ground connections and is divided. In spite of the relatively small protective conductor cross-sections used in accordance with the table above, no inadmissible touch voltages occur with this grounding system.
  However, from experience gained with different grounding constellations, we recommend that the ground cable from the motor return directly to the converter. For EMC reasons and to avoid bearing currents, for large power ratings, it is preferable to use symmetrical 3-conductor, three-phase cables instead of four-conductor cables. For 3-conductor cables, the protective or PE conductor must be routed separately or arranged symmetrically in the motor cable. Symmetry of the PE conductor is achieved using a conductor surrounding all phase conductors or using a cable with a symmetrical arrangement of the three phase conductors and three ground conductors.
  For additional information, please refer to the SINAMICS Low Voltage Engineering Manual.
- Through their high-speed control, the converters limit the load current (motor and ground fault currents) to an rms value corresponding to the rated current. As a result of this fact, we recommend that the cross-section of the protective conductor to ground the cabinets is the same as for the outer conductor.

[1] A maximum of 9 cables may be routed directly next to one another horizontally on a cable tray.

© Siemens 2024

Overview

Mounting device for power blocks

The mounting device is used for installing and removing the power blocks.

The mounting device is a mounting aid. It is placed in front of the module and attached to the module. The telescopic rails allow the device to be adjusted to the installation height of the power blocks.

Once the mechanical and electrical connections have been released, the power block can be removed from the module.

The power block is guided and supported by the guide rails on the handling device.

Selection and ordering data

Description	Article No.
Mounting device for installing and removing power blocks	**6SL3766-1FA00-0AA0**

© Siemens 2024

© Siemens 2024

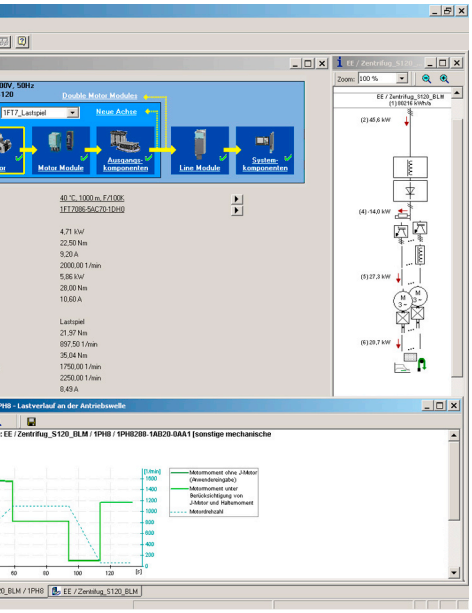

Security information

Siemens provides products and solutions with industrial security functions that support the secure operation of plants, systems, machines and networks.

In order to protect plants, systems, machines and networks against cyber threats, it is necessary to implement – and continuously maintain – a holistic, state-of-the-art industrial security concept. Siemens' products and solutions constitute one element of such a concept.

Customers are responsible for preventing unauthorized access to their plants, systems, machines and networks. Such systems, machines and components should only be connected to an enterprise network or the internet if and to the extent such a connection is necessary and only when appropriate security measures (e.g. firewalls and/or network segmentation) are in place.

For additional information on industrial security measures that may be implemented, please visit www.siemens.com/industrialsecurity

Siemens' products and solutions undergo continuous development to make them more secure. Siemens strongly recommends that product updates are applied as soon as they are available and that the latest product versions are used. Use of product versions that are no longer supported, and failure to apply the latest updates may increase customer's exposure to cyber threats.

To stay informed about product updates, subscribe to the Siemens Industrial Security RSS Feed under www.siemens.com/cert

9/2 Engineering tools
9/2 SinaSave energy efficiency tool
9/3 Siemens Product Configurator
9/4 SIZER for Siemens Drives engineering tool (integrated in the TIA Selection Tool)
9/5 STARTER commissioning tool
9/7 SINAMICS DCC (STARTER)
9/8 SINAMICS Startdrive commissioning tool
9/10 SINAMICS DCC (Drive Control Chart) in the TIA Portal
9/12 SINAMICS web server for SINAMICS S120
9/13 Drive ES engineering software
9/15 Configuration with EPLAN

9/17 Engineering information
9/17 Planning
9/18 EMC notes for applying product standard EN 61800-3
9/21 Engineering Manual

© Siemens 2024

SinaSave energy efficiency tool

Overview

SinaSave determines the energy saving potential and payback time based on your application setup. SinaSave is a web tool which is intuitive to operate and supports you in an investment decision:

- Is it worthwhile to use more energy efficient systems?
- When will my investment pay off?

SinaSave supports you to find the optimum solution: technically, economically, and ecologically.

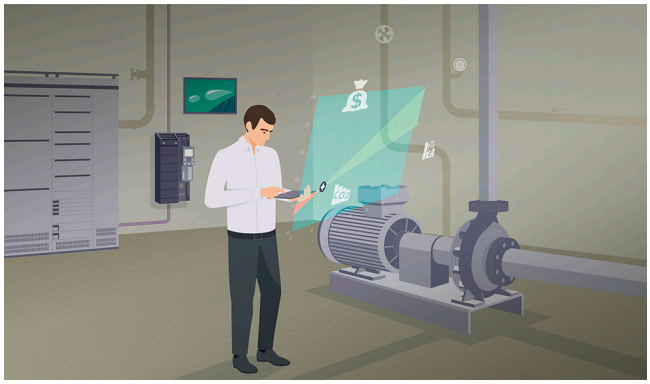

In which cases can SinaSave support you?

- Motors
  - Calculate your potential energy savings and amortization times with SIMOTICS motors
- Pump systems
  - Calculate your potential energy and CO2 savings with our pump drive systems
- Fan systems
  - Calculate your potential energy and CO2 savings with our fan drive systems

Access to the SinaSave energy efficiency tool

SinaSave can be accessed without the need for registration or logging in:
www.siemens.com/sinasave

Benefits

- **Transparency of overall savings potential and individual amortization plan**
  - SinaSave calculates the expected energy consumption and the resulting savings of energy, CO2 and energy cost, based on your individual energy prices, operating times and load profiles.
- **Support to find the optimum solution to make easy decision**
  - SinaSave directly compares your existing motors with SIMOTICS motors of various energy efficiency classes, for new systems and retrofits.
- **Ease of use and self-explanatory user guidance to calculate savings potential on overall system level**
  - SinaSave compares different drive system configurations for pump or fan applications. Regardless of greenfield or brownfield projects, SinaSave offers the flexibility to choose from different motor types and control modes, including variable speed drives and softstarters.
- **Well-structured SinaSave projects give you transparency of the savings potential of your entire facility**
  - SinaSave lets you combine several items in a single project. That means it's possible to reflect entire facilities and identify the savings potential they offer.

Function

- Determine savings potential for energy, power costs, and CO2
- Estimate expected amortization and Total Costs of Ownership (TCO)
- Output of system power losses for motor inverter systems as per IEC 61800-9-2
- Calculate possible financing, such as energy performance contracting (EnPC)
- Take government subsidies into account
- Simple design with intuitive usability
- Results presented in graphic form
- Save and load, share a handout e.g with your customer or decision-maker
- Eight languages, 14 currencies, IEC and NEMA standards
- Direct transfer to next processes, e.g. product configuration

More information

Further information about the amortization calculator for energy-efficient drive systems is available on the internet at:
www.siemens.com/tools-sinasave

Further information about services for energy saving is available on the internet at:
www.siemens.com/energy-saving

www.siemens.com/energy-efficiency

© Siemens 2024

Overview

The Siemens Product Configurator helps you to configure the optimum drive technology products for a number of applications. The product portfolio comprises the full drive technology range of gearbox, motor, converter and connection system as well as corresponding controller with suitable software license. The intuitive user interface in conjunction with product-specific preliminary selectors makes it simple, fast and efficient to configure products. The result is a bill of materials with extensive documentation consisting of technical data sheets, motor characteristic curves, 2D dimensional drawings / 3D CAD models, EPLAN macros and much more. You can order the products directly by transferring the bill of materials to the shopping cart of SiePortal.

Siemens Product Configurator at a glance

- Quick and easy configuration of drive products and associated components – gearboxes, motors, converters, controllers, connection systems
- Extensive documentation for all products and components, such as
  - Data sheets in up to 12 languages
  - Motor characteristic curves
  - 2D dimensional drawings / 3D CAD models in different formats
  - Terminal box drawing and terminal connection diagram
  - Certificates
  - EPLAN macros
- Ability to order products directly through SiePortal

Access to Siemens Product Configurator

The Siemens Product Configurator can be accessed without the need for registration or logging in:
www.siemens.com/spc

© Siemens 2024

SIZER for Siemens Drives engineering tool (integrated in the TIA Selection Tool)

Overview

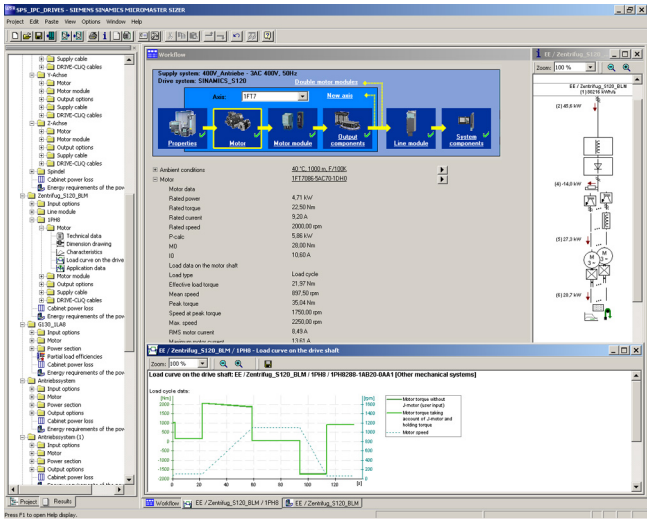

The following drives and controls can be engineered in a user-friendly way using the SIZER for Siemens Drives engineering tool:

- SIMOTICS motors, including servo geared motors
- SINAMICS low-voltage drive systems
- Motor starters
- SINUMERIK CNC
- SIMOTION Motion Control controller
- SIMATIC controller

It provides support when selecting the technologies involved in the hardware and firmware components required for a drive task. SIZER for Siemens Drives covers the full range of operations required to configure a complete drive system, from basic single drives to demanding multi-axis applications.

SIZER for Siemens Drives supports all of the engineering steps in one workflow:

- Configuring the power supply
- Designing the motor and gearbox, including calculation of mechanical transmission elements
- Configuring the drive components
- Compiling the required accessories
- Selecting the line-side and motor-side power options, e.g. cables, filters, and reactors

When SIZER for Siemens Drives was being designed, particular importance was placed on a high degree of usability and a universal, function-based approach to the drive application. The extensive user guidance makes it easy to use the tool. Status information keeps you continually informed about the progress of the configuration process.

The drive configuration is saved in a project. In the project, the components and functions used are displayed in a hierarchical tree structure.

The project view permits the configuration of drive systems and the copying/inserting/modifying of drives already configured.

The configuration process produces the following results:

- A parts list of the required components (export to Excel, use of the Excel data sheet for import to SAP)
- Technical specifications of the system
- Characteristic curves
- Comments on line harmonic distortions
- Mounting arrangement of drive and control components and dimensional drawings of motors
- Energy requirements of the configured application

These results are displayed in a results tree and can be reused for documentation purposes.

Support is provided by the technological online help menu:

- Detailed technical specifications
- Information about the drive systems and their components
- Decision-making criteria for the selection of components
- Online help in English, French, German, Italian, Chinese and Japanese

System requirements

- PG or PC, with Pentium III min. 800 MHz (recommended > 1 GHz)
- 512 MB RAM (1 GB RAM recommended)
- At least 2 GB of free hard disk space
- An additional 100 MB of free hard disk space on Microsoft Windows system drive
- Screen resolution 1024 × 768 pixels
- Operating system:
  - Microsoft Windows 7 (32/64-bit) Professional, Enterprise, Ultimate, Home
  - Microsoft Windows 8.1 (32/64-bit) Professional, Enterprise, Ultimate, Home
  - Microsoft Windows 365
  - Microsoft Windows 10 (64-bit) Professional, Enterprise
- Microsoft Office 2003/2007/2010/2013/2016/365
- Microsoft Internet Explorer V8.0
- Microsoft .NET Framework 2.0
- OpenGL 2.1

More information

Drive dimensioning in the TIA Selection Tool

Application-specific requirements can be determined using drive technology dimensioning in the TIA Selection Tool. This can include motors, gearboxes and converters. The tool supports the configuration and dimensioning of control functions with an open and closed control loop. The technical documentation with features of the technical drive system, as well as a product list for ordering via SiePortal can also be compiled.

You can find more information on the SIZER for Siemens Drives engineering tool at
https://support.industry.siemens.com/cs/ww/en/ps/13434/dl

You can find more information about the TIA Selection Tool at:
www.siemens.com/tia-selection-tool

© Siemens 2024

Overview

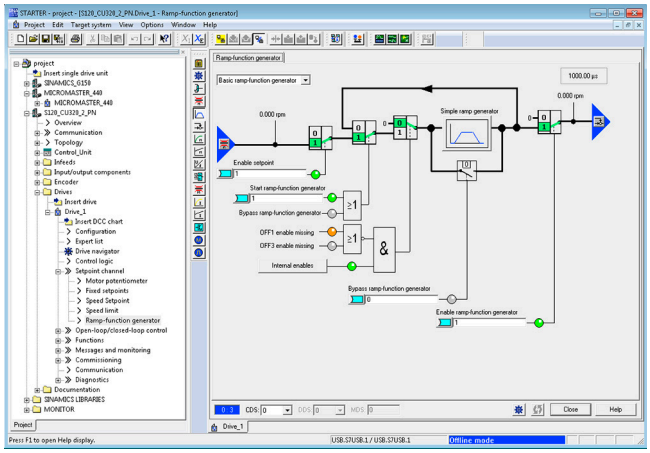

The user-friendly STARTER commissioning tool can be used for:

- Commissioning
- Optimization
- Diagnostics

This software can be operated as a standalone PC application, or integrated as a TIA-compatible program in SIMATIC STEP 7, or highly integrated into the SCOUT Engineering System (for SIMOTION). The basic functions and handling are the same in both cases.

In addition to the SINAMICS drives, STARTER also supports MICROMASTER 4 devices.

The project wizards can be used to create the drives within the structure of the project tree.

Beginners are supported by solution-based dialog guidance, whereby a standard graphics-based display maximizes clarity when setting the drive parameters.

First commissioning is guided by a wizard which makes all the basic settings in the drive. Therefore, getting a motor up and running is merely a question of setting a few of the drive parameters as part of the drive configuration process.

The individual settings required are made using graphics-based parameterization screens, which also precisely visualize the principle of operation of the drive.

Examples of individual settings that can be made include:

- Use of terminals
- Bus interface
- Setpoint channel (e.g. fixed setpoints)
- Closed-loop speed control
  (e.g. ramp-function generator, limits)
- BICO interconnections
- Diagnostics

For experts, the expert list can be used to specifically and quickly access individual parameters at any time. An individual compilation of frequently used parameters can be saved in dedicated user lists and watch tables.

In addition, the following functions are available for optimization purposes:

- Self-optimization of the controller settings
  (depending on drive unit)
- Setup and evaluation of trace recordings [1)]
  Tool function for recording 2 × 8 signals with
  - Measuring cursor function
  - Extensive trigger functions
  - Several Y scales
  - Sampling times in the current controller cycle clock

Diagnostics functions provide information about:

- Control/status words
- Parameter status
- Operating conditions
- Communication states

Performance features

- User-friendly: Only a small number of settings need to be made for successful first commissioning: The motor starts to rotate
- Solution-oriented dialog-based user guidance simplifies commissioning
- Self-optimization functions reduce manual effort for optimization.

System requirements

The following minimum requirements must be complied with:

- Hardware
  - PG or PC with Pentium III min. 1 GHz
    (recommended >1 GHz)
  - Work memory 2 GB (4 GB recommended)
  - Screen resolution 1024 × 768 pixels, 16-bit color depth
  - Free hard disk memory: min. 5 GB
- Software
  - Microsoft Internet Explorer V6.0 or higher
  - 64-bit operating systems:
    Microsoft Windows Server 2029
    Microsoft Windows Server 2022
    Microsoft Windows 10 Pro
    Microsoft Windows 10 Enterprise
    Microsoft Windows 11 Home, Pro and Enterprise (64 bit)

Supported virtualization platforms

STARTER (V5.1 SP1 and higher) can be installed on a virtual machine. For this purpose, one of the following virtualization platforms in the specified version or a newer version can be used:

- VMware vSphere Hypervisor ESX(i) V8.0
- VMware Workstation Pro 17
- VMware Player 17
- Microsoft Hyper-V Server 2022

You can use the following guest operating systems to install STARTER within the selected virtualization platform:

- Microsoft Windows 10 Pro/Enterprise (64 bit)
- Microsoft Windows 11 Pro/Enterprise (64 bit)

Notes:

- The same hardware requirements apply to the guest operating system as for STARTER and SINAMICS DCC.
- The system operator must ensure that the guest operating systems have sufficient system resources.
- The use of manufacturer-certified hardware is recommended for the operation of VMware vSphere Hypervisor ESX(i).

[1)] Depending on drive unit. Not supported for MICROMASTER 4, SINAMICS G110, SINAMICS G120 <firmware V4.4, SINAMICS G110D and SINAMICS G120D <firmware V4.5.

© Siemens 2024

Integration

Data can be exchanged (depending on the version) via PROFIBUS or PROFINET/Ethernet or via a serial interface.

For commissioning and service, a PG/PC can be connected to the CU320-2 Control Unit via PROFIBUS. A PROFIBUS connection must be available with a connecting cable at the PG/PC.

Further, communication between a CU320-2 Control Unit and PG/PC can also be established via Ethernet, either via an (optional) CBE20 Communication Board or the Ethernet interface -X127 on the CU320-2 Control Unit.

Note:
The terminal strip -X127 is suitable as a communication link to the PG/PC only for the purposes of servicing and commissioning.

Selection and ordering data

Description	Article No.
STARTER commissioning tool	
Single license and certificate of license	
German, English, French, Italian, Spanish	
• On DVD-ROM	**6SL3072-0AA00-0AG0**
• Software download	**6SL3072-0AA00-0AK0**
(email address required for delivery)	

Note:
In addition to the STARTER commissioning tool, SINAMICS Drive Control Chart (SINAMICS DCC) can be installed. This allows the device functionality in the SINAMICS drive system to be expanded with dedicated technology functions as required.

Further information about SINAMICS DCC can be found in the section SINAMICS DCC (Drive Control Chart) with STARTER.

Accessories

Depending on the version of the Control Unit (CU), the Control Unit of the drive unit can communicate with the programming device (PG) or PC via PROFIBUS or PROFINET/Ethernet or via a serial interface. The following accessories are available for the particular drive system as listed in the following table.

Description		**Recommended accessories** For communication between the drive unit and the programming device or PC Article No.
SINAMICS S120		
• RS232	Standard null modem cable	–
• PROFIBUS	**CP 5711 communication module** USB adapter for connecting a PG or notebook to PROFIBUS or MPI USB cable (2 m (6.56 ft)) included in scope of supply	
	SIMATIC DP plug-in cable 12 MBaud, for PG connection, pre-assembled with 2 × 9-pin SUB D connector, 3 m (9.84 ft)	**6ES7901-4BD00-0XA0**
• PROFINET/ Ethernet	Standard CAT5 Ethernet cable or PROFINET cable	–
SINAMICS S150		
• PROFIBUS	**CP 5711 communication module** USB adapter for connecting a PG or notebook to PROFIBUS or MPI USB cable (2 m (6.56 ft)) included in scope of supply	**6GK1571-1AA00**
	SIMATIC DP plug-in cable 12 MBaud, for PG connection, pre-assembled with 2 × 9-pin SUB D connector, 3 m (9.84 ft)	**6ES7901-4BD00-0XA0**
• PROFINET/ Ethernet	Standard CAT5 Ethernet cable or PROFINET cable	–

More information

The STARTER commissioning tool is also available on the internet under
www.siemens.com/starter

© Siemens 2024

Overview

SINAMICS DCC (Drive Control Chart) is a technological expansion for the SINAMICS S120/S150/G130/G150/MV/DCM/DCP drive systems. This allows the device functions of the SINAMICS drive system to be expanded individually with freely available closed-loop control, arithmetic and logic blocks. SINAMICS DCC for STARTER enables simple, graphic configuration of these blocks and integrates them in the drive unit.

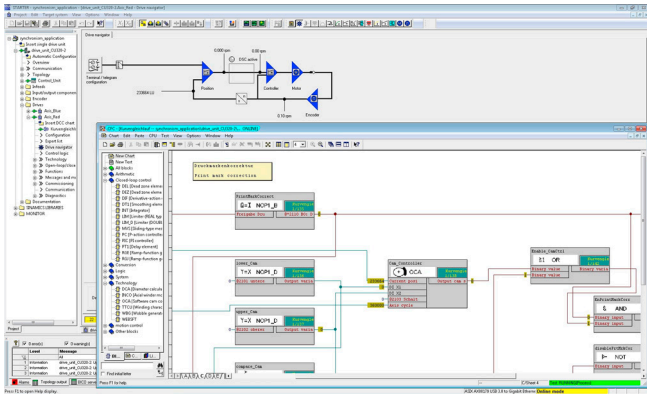

A comprehensive standard library is available for the configuration, which can be expanded by additional libraries, the so-called DCB Extension.

Via the Siemens application support, a range of example applications (winder, synchronous operation, cross-cutter, etc.) are available for download on the basis of SINAMICS DCC with STARTER and can be used as a ready-to-use solution or be individually adapted or expanded.

Minimum hardware and software requirements

See STARTER commissioning tool.

Minimum software requirements for existing SIMATIC CFC Editor

The installation of STARTER V5.6 HF1 and SINAMICS DCC V3.6 HF1 results in the following minimum requirements:

- When using STEP 7 OEM V5.7 in the standalone installation: SIMATIC CFC Editor V9.0 SP5 Upd4
- When using STEP 7 V5.7 SP1 full version (with monitoring of application integrity): SIMATIC CFC Editor V9.0 SP5 Upd4
- When using STEP 7 V5.7 SP1 full version (without monitoring of the application integrity): SIMATIC CFC Editor V9.0 SP3 Upd4

Please check the minimum requirements in relation to the product SIMATIC CFC when installing STEP 7 or SIMATIC PCS 7.

Selection and ordering data

SINAMICS DCC consists of a graphic configuration tool (DCC Editor based on SIMATIC CFC) and the standard library. SINAMICS DCC is installed as an add-on to the STARTER commissioning tool.

The SINAMICS DCC V3.6 HF1 with SIMATIC CFC Editor V9.0 SP8 Upd1 software package is a component of STARTER V5.6 HF1.
The necessary license key (floating license) for the configuration of SINAMICS DCC V3.6 HF1 must be ordered separately.

The included DCB standard library of SINAMICS DCC V3.6 HF1 does not require a runtime license. Existing licenses for SINAMICS DCC V2.1 and higher can also be used for SINAMICS DCC V3.6 HF1.

An upgrade variant for the application in STARTER V5.6 HF1 and SINAMICS DCC V3.6 HF1 is available for an existing license key of SINAMICS DCC V2.0 SPx.

Description	Article No.
SINAMICS DCC V3.4 SP2 License Key for SINAMICS DCC V3.4, V3.5 and V3.6	
• License key on USB flash drive	**6AU1810-1HA34-0XB0**
• Upgrade license key on USB flash drive	**6AU1810-1HA34-0XF0**
SINAMICS DCB Extension license Runtime license for license upgrading with firmware version V4.6 or later (can also be ordered in conjunction with the CompactFlash card, see CompactFlash card for CU310-2 and CU320-2 Control Units)	
• Electronic license	**6SL3077-0AA00-0AH0**
SINAMICS DCB Studio V2.3 SP1 Development tool for programming blocks that can be imported as an additional library (DCB Extension) for SINAMICS DCC in STARTER or in the TIA Portal	On request

Further information about SINAMICS DCB Extension and SINAMICS DCB Studio can be found in the section SINAMICS DCC (Drive Control Chart) in the TIA Portal.

© Siemens 2024

SINAMICS Startdrive commissioning tool

Overview

SINAMICS Startdrive is integrated in the TIA Portal and is a tool for the configuration, commissioning and diagnostics of the SINAMICS family of converters.

The SINAMICS Startdrive commissioning tool has been optimized with regard to user friendliness and consistent use of the TIA Portal benefits of a common working environment for PLC, HMI and drives. Time-saving and guided step-by-step commissioning with maximum flexibility is complemented by user-friendly graphic function views for all drive functions, including functional safety (Safety Integrated) and drive-based technology functions (e.g. EPOS). The automatic message display, the powerful real-time trace and the context-sensitive online help make converter diagnostics very easy.

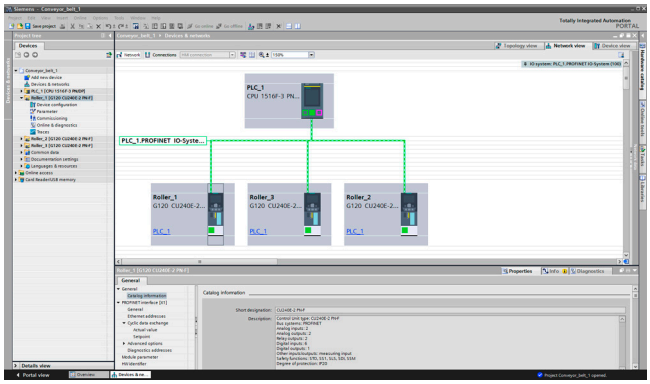

The software packages based on the TIA Portal are harmonized with each other and offer important benefits, the main advantage being a shared project storage. The TIA Portal enables simple integration of SINAMICS converters in your automation solution. Thanks to the standardization of operator actions and the integration in general TIA Portal operating concepts (e.g. UMAC, Openness) as well as standard TIA Portal functions (e.g. Undo/Redo), familiarization is easy both for drive experts as well as SIMATIC users. Special focus is placed on the interaction between SIMATIC and SINAMICS, especially when connecting the SINAMICS drives to SIMATIC technology objects.

Integration

Supported frequency converters

SINAMICS Startdrive Basic enables complete commissioning, diagnostics, parameterization, optimization and connection to the PLC for the following SINAMICS converters integrated in SINAMICS Startdrive:

- SINAMICS G120, G120C, G120D, G120P
- SINAMICS G115D
- SINAMICS G130, G150
- SINAMICS G220 (as of V18 SP2)
- SINAMICS S120 [1], S150
- SINAMICS S200 (as of V18 SP2)
- SINAMICS S210 and SINAMICS S210 (New) (as of V18 SP1)
- SINAMICS MV

SINAMICS Startdrive Advanced

With SINAMICS Startdrive Advanced (available as of V15) you benefit from powerful engineering functions that save you considerable time and ultimately costs.

- Safety acceptance test:
  - Guided acceptance test wizard for all drive-based Safety Integrated functions
  - Automatic and safety function-specific generation of traces to analyze the machine behavior
  - Generation of an acceptance report as Excel file (xlsx format, can also be used with OpenOffice)
  - Safety Activation Test
- Improved optimization options in the drive: Extended measuring functions (available for CU320-2 PN/DP and CU310-2 PN as of V5.2 SP3, SINAMICS S210 (New) as of V6.1 and SINAMICS S200 as of V6.2), long-term trace
- Also contains all Startdrive Basic functions
- Only license key required, no additional installation

New in V19

Startdrive Basic V19

- Support of the shared device functionality for SINAMICS S210, S120, G220 for separate control of the drives by separate controllers
- Improvement of the library function for individual drive objects in the multi-axis system
- Integration of the decentralised SINAMICS S120M drives
- Integration of the drive version V6.3 for SINAMICS S200 and SINAMICS S210 (New):
  - Introduction of the positioning function EPOS for SINAMICS S210 (New)

Startdrive Advanced V19

- Long-term trace functionality for CU320-2 PN/DP and CU310-2 PN-based drive units

[1] Includes SINAMICS S220 Smart Line Modules booksize format as of SINAMICS Startdrive V17 Update 1.

© Siemens 2024

Integration

Installation versions

SINAMICS Startdrive can be installed as an optional package to SIMATIC STEP 7 or as a stand-alone application (without SIMATIC STEP 7).

System requirements

The following table shows the recommended hardware and system equipment for the operation of SINAMICS Startdrive.

Hardware	Recommendation
Computer	As of SIMATIC FIELD PG M6 Comfort (or comparable PC)
Processor	Intel Core i5-8400H (2.5 ... 4.2 GHz; 4 cores + hyper-threading; 8 MB Smart Cache)
RAM	16 GB or more (32 GB for large projects)
Hard disk	SSD with at least 50 GB available memory
Screen resolution	15.6" Full HD display (1920 × 1080 or larger)
Operating systems	• **Microsoft Windows 10 (64 bit)** - Windows 10 Professional Version 22H2 - Windows 10 Enterprise 21H2, 22H2 - Windows 10 Enterprise 2016 LTSC - Windows 10 Enterprise 2019 LTSC - Windows 10 Enterprise 2021 LTSC • **Microsoft Windows 11 (64 bit)** - Windows 11 Home Version 21H2, 22H2 - Windows 11 Professional Version 21H2, 22H2 - Windows 11 Enterprise 21H2, 22H2 • **Microsoft Windows Server (64 bit)** - Windows Server 2016 Standard (full installation) - Windows Server 2019 Standard (full installation) - Windows Server 2022 Standard (full installation)

Compatibility with other products

- SINAMICS Startdrive V19 operates with STEP 7, WinCC and Scout TIA V19 in one framework
- SINAMICS Startdrive V19 can be installed on the same computer in parallel with other versions of SINAMICS Startdrive V12 to V18
- SINAMICS Startdrive can be installed on the same computer as SINAMICS MICROMASTER STARTER

Supported virtualization platforms

SINAMICS Startdrive can be installed in a virtual machine. For this purpose, one of the following virtualization platforms in the specified version or a newer version can be used:

- VMware vSphere Hypervisor (ESXi) 6.7
- VMware Workstation 15.5.0
- VMware Player 15.5.0
- Microsoft Hyper-V Server 2019

Supported safety programs

The following safety programs have been tested with SINAMICS Startdrive V19:

- Virus scanners:
  - Symantec Endpoint Protection 14.6
  - Trend Micro OfficeScan 14.0
  - McAfee Endpoint Security (ENS) 10.6 and 10.7
  - Microsoft Defender
  - Qihoo 360 "Safe Guard 12.1" + "Virus Scanner"
- Encryption software:
  - Microsoft Bitlocker
- Host-based Intrusion Detection System
  - McAfee Application Control 8.3.3

Selection and ordering data

Description	Article No.
SINAMICS Startdrive Basic V19 commissioning tool Single license and certificate of license English, French, German, Italian, Spanish, Chinese Simplified	
• Software download (email address required for delivery)	**6SL3072-4KA02-0XG0**
SINAMICS Startdrive Advanced V19 commissioning tool License key (floating license) English, French, German, Italian, Spanish, Chinese Simplified	
• On DVD-ROM with license key on USB flash drive	**6SL3072-4KA02-0XA5**
• Software download incl. license key (email address required for delivery)	**6SL3072-4KA02-0XG5**
Upgrade SINAMICS Startdrive Advanced V15 ... V18 to V19	
• On DVD-ROM with license key on USB flash drive	**6SL3072-4KA02-0XE5**
• Software download incl. license key (email address required for delivery)	**6SL3072-4KA02-0XK5**
Software Update Service with SINAMICS Startdrive Advanced in the TIA Portal Delivery is performed according to the number of ordered SUS products (e.g. 10 upgrade license keys (floating license) with 10 DVD-ROMs, 10 USB flash drives, etc.)	
• On DVD-ROM with upgrade license key on USB flash drive	**6SL3072-4AA02-0XL8**
• Software download incl. license key (email address required for delivery)	**6SL3072-4AA02-0XY8**

Note:

SINAMICS DCC can be installed in addition to the SINAMICS Startdrive commissioning tool. This allows the device functionality in the SINAMICS drive system to be expanded with dedicated technological functions as required.

Further information about SINAMICS DCC can be found in the section SINAMICS DCC (Drive Control Chart) in the TIA Portal.

More information

The SINAMICS Startdrive Basic commissioning tool is available free on the internet at
www.siemens.com/startdrive

© Siemens 2024

Overview

SINAMICS DCC (Drive Control Chart) is a technological expansion for the SINAMICS S120/S150/G130/G150/MV drive systems and for SIMATIC Drive Controller. This allows the device functions of the converter systems to be expanded individually with freely available closed-loop control, arithmetic and logic blocks and thus opens up a new dimension of adaptation capabilities for the specific functions of the machine for the user. The user-friendly configuration tool in the TIA Portal enables simple, graphic configuration of these blocks and integrates them in the drive unit. SINAMICS DCC is available as an option for SINAMICS Startdrive Basic and Advanced in the TIA Portal.

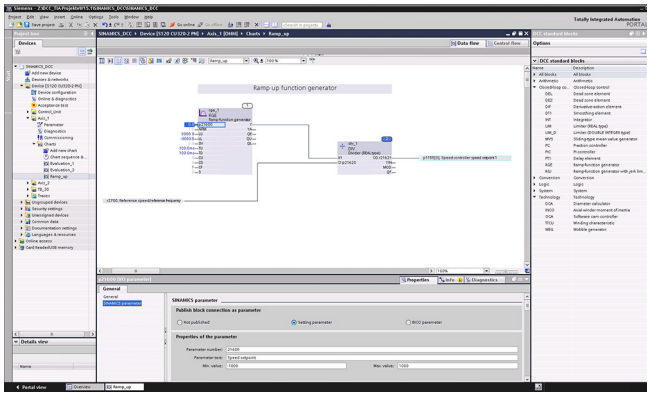

With the integration into the TIA Portal, the focus is on simple usability. For this reason, closed loop control and open loop control functions can be graphically interconnected in just a few steps via drag and drop.

The SINAMICS DCC installation contains a comprehensive standard block library. Furthermore, additional libraries can be installed as DCB Extension to expand the range of functions of the blocks. The diagnostics functions allow the program behavior to be verified and, in the case of a fault, the cause to be identified.

Via the Siemens application support, a range of example applications (winder, synchronous operation, cross-cutter, etc.) are available for download on the basis of SINAMICS DCC and can be used as a ready-to-use solution or be individually adapted or expanded.

New in V19

- Upload of complex charts that were created with the SINAMICS MICROMASTER STARTER commissioning software
- Simplified localization of DCC parameters in the plan by cross-referencing them in the parameter view
- Statistics overview of plan contents
- Openness extensions for editing charts

Licenses

SINAMICS DCC V19 is delivered with a SINAMICS DCC V19 combo floating license. The floating license allows the use of software on any number of computers. This allows one user per license to use the software independently of the computer being used or a specific workstation. The number of existing licenses determines the number of computers on which the software can be used simultaneously.

- Existing SINAMICS DCC combo licenses V15 ... V18 can be upgraded to V19. This requires an upgrade license.
- The combo license allows parallel use of SINAMICS DCC V3.3/V3.4 and SINAMICS DCC V19 if both tools are installed on the same PC.

Installation versions

SINAMICS DCC is an option package for SINAMICS Startdrive Basic and Advanced.

System requirements

The SINAMICS DCC V19 option package has the same system requirements and supports the same virtualization platforms and safety programs as SINAMICS Startdrive V19.

Compatibility with other products

- SINAMICS DCC V19 operates with Startdrive, STEP 7 and WinCC in one framework
- SINAMICS DCC V19 can be installed on a computer in parallel with SINAMICS MICROMASTER STARTER with SINAMICS DCC

Supported languages

- Standard installation: English, German, Chinese (simplified)
- Language packages: French, Italian, Spanish

© Siemens 2024

Selection and ordering data

SINAMICS DCC in the TIA Portal, consisting of the graphical configuration tool and the standard library, is the continuation of SINAMICS DCC in the STARTER.

No runtime license is required for the standard library included in the scope of supply.

Description	Article No.
SINAMICS DCC V19 for TIA Portal incl. Floating as an option package for SINAMICS Startdrive Basic or Advanced V19	
Combo license key (floating license) German, English, French, Italian, Spanish, Chinese Simplified	
• On DVD-ROM with license key on USB flash drive	**6SL3070-4KA01-0XA5**
• Software download incl. license key (email address required for delivery)	**6SL3070-4KA01-0XG5**
Upgrade SINAMICS DCC V15.1 ... V18 to V19	
• On DVD-ROM with license key on USB flash drive	**6SL3070-4KA01-0XE5**
• Software download incl. license key (email address required for delivery)	**6SL3070-4KA01-0XK5**
Software Update Service with SINAMICS DCC in the TIA Portal [1]	
Delivery is performed according to the number of ordered SUS products (e.g. 10 upgrade license keys with 10 DVD-ROMs, 10 USB flash drives, etc.)	
• On DVD-ROM with license key on USB flash drive	**6SL3070-4AA01-0XL8**
• Software download incl. license key (email address required for delivery)	**6SL3070-4AA01-0XY8**

DCB Extension

With DCB Extension, additional libraries can be added as specifically programmed blocks to the standard block library. As a result, complex tasks can be implemented in the drive and the internal know-how protection can be increased as a Black Box. These blocks or libraries are programmed with the separate SINAMICS DCB Studio development tool in the C/C++ high-level language and can be used as a DCB Extension library for SINAMICS DCC in the TIA Portal and SINAMICS DCC in STARTER. The use of these blocks from DCB Extension libraries requires a SINAMICS DCB Extension runtime license.

SINAMICS DCB Extension license

Runtime license for re-licensing as of firmware V4.6 for the use of additional blocks/libraries (can also be ordered together with the CompactFlash card, see CompactFlash card for the Control Units CU310-2 and CU320-2) 6SL3077-0AA00-0AH0

SINAMICS DCB Studio V2.3

Development tool for programming blocks that can be imported as an additional library (DCB Extension) for SINAMICS DCC in the TIA Portal or in STARTER (upon request)

More information

TIA Portal highlights
www.siemens.com/tiaportal

The SINAMICS DCC option package as trial version is available free on the internet at
www.siemens.com/startdrive

[1] See Software Update Service section.

© Siemens 2024

SINAMICS web server for SINAMICS S120

Overview

Web server for efficient diagnostics and maintenance – available everywhere at all times

The SINAMICS drive system can be expanded with the web server to provide an efficient diagnostics and maintenance option. The web server provides access to multi-faceted new options for drive diagnostics and remote maintenance for every network-compatible PC with a Web browser. For example:

- Downloading a configuration
- Updating firmware
- Providing a status overview of the drive
- Evaluating warnings and fault messages
- Monitoring and adapting parameter settings
- Saving machine documentation, including notes
- Setting up of a user administration to provide access protection

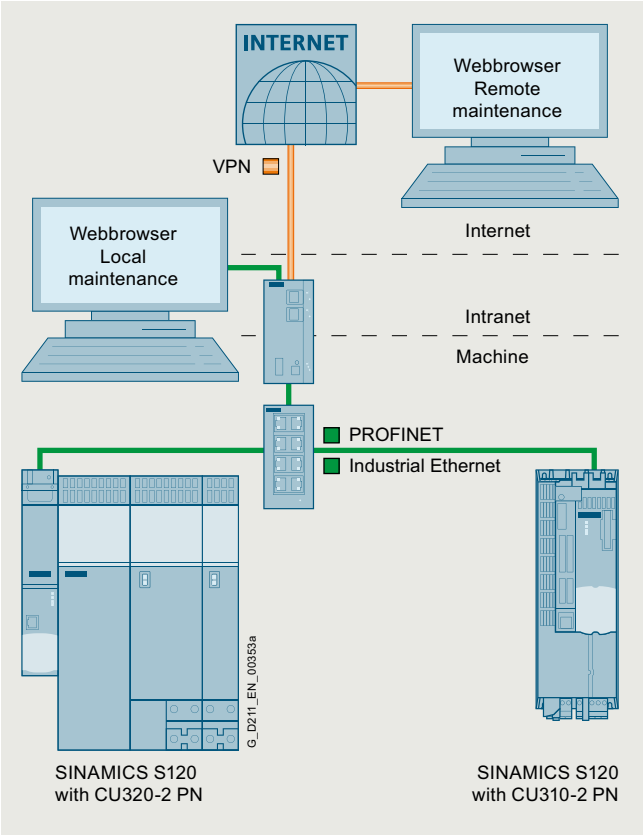

Integration of the SINAMICS web server as shown by the example of the SINAMICS S120 and PROFINET communication

The SINAMICS web server is available from SINAMICS firmware V4.7 or higher on the CompactFlash card for the Control Units

- CU310-2 DP
- CU310-2 PN
- CU320-2 DP
- CU320-2 PN

For further information, refer to CU310-2 and CU320-2 Control Units.

Benefits

Shorter machine downtimes

- Efficient diagnostics and maintenance

Direct language selection

- English, German, Chinese, Italian, French, Spanish

Accessibility

- Via all LAN or PROFINET interfaces

Two users with different rights can be configured

- e. g. for operators and service personnel

Diagnostic functions

- Quick overview of the current configuration and the state of the drive
- Understandable diagnostic information and messages are displayed in plain text in multiple languages

Freely configurable parameter lists

- Monitoring parameters for diagnostic purposes, for example for operating personnel
- Adapting/optimizing existing projects, for example for service personnel

Updating functions

- The device functionality can be updated from any network-compatible PC (locally or by remote access)
- Series commissioning is possible without the STARTER commissioning tool

Archiving machine documentation

- Appropriate documentation and the state of the service and maintenance work are available on site to the operating and service personnel

Access security

- Protection against unauthorized access to the drive information

Integration of customer-specific websites

- Integrating customer know-how into the websites enables the quick, purposeful diagnostics of the customer application

Application

The web server is ideal for applications not requiring any special software (STARTER) or version dependencies. Easy diagnostics and maintenance are possible both locally and remotely, provided appropriate security measures are applied.

More information

Further information about the SINAMICS Web server is available on the internet at
www.siemens.com/sinamics-webserver

© Siemens 2024

Overview

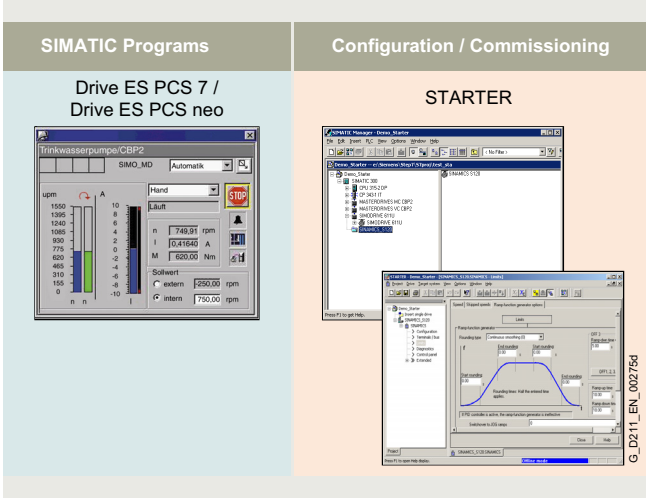

Drive ES/STARTER is the engineering system used to integrate the communication, configuration and data management functions of Siemens drive technology into the SIMATIC automation world easily, efficiently and cost-effectively.

The following software packages are available for selection:

- STARTER
- Drive ES PCS 7 / Drive ES PCS neo

The Drive ES (**D**rive **E**ngineering **S**oftware) fully integrates drives from Siemens into the world of Totally Integrated Automation (STEP 7 V5.x).

Design

The following software packages are available for selection:

- **STARTER**
- **Drive ES PCS 7** (APL Style or Classic Style) / **Drive ES PCS neo**

STARTER

The STARTER commissioning tool is for first-time users of the world of Totally Integrated Automation and the basic software for setting the parameters of the SINAMICS and MICROMASTER 4 drives online and offline in this environment. The STARTER integration enables both the automation system and the drives to be handled using the SIMATIC Manager software. STARTER is the starting point for common data archiving in complete projects and for extending the use of the routing and the SIMATIC teleservice to drives. STARTER provides the configuration tools for the Motion Control functions – device-to-device communication, equidistance and isochronous operation with PROFIBUS DP and ensures that drives with PROFINET IO are simply integrated into the SIMATIC environment.

Drive ES PCS 7 (APL Style or Classic Style)

Drive ES PCS 7 links the drives with a PROFIBUS DP interface into the SIMATIC PCS 7 process control system, and it requires that SIMATIC PCS 7, V6.1 and higher has first been installed. Drive ES PCS 7 provides a block library with blocks for the drives and the corresponding faceplates for the operator station, which enables the drives to be operated from the PCS 7 process control system. From V6.1 and higher, drives will also be able to be represented in the PCS 7 Maintenance Station.

From Drive ES PCS 7 V8.0 and higher, two versions of the library are available: The APL (Advanced Process Library) variant and the previous version in the so-called Classic Style.

Detailed contents of the Drive ES PCS 7 (APL Style or Classic Style)

- **Block library for SIMATIC PCS 7** Faceplates and control blocks for SIMOVERT MASTERDRIVES VC and MC, as well as MICROMASTER/MIDIMASTER of the third and fourth generation and SIMOREG DC MASTER and SINAMICS
- **STEP 7 V5.x slave object manager** for user-friendly configuration of drives and non-cyclic PROFIBUS DP communication with the drives
- **STEP 7 V5.x device object manager** for easy configuration of drives with PROFINET-IO interfaces (V8.0 SP1 and higher)
- **SETUP program** for installing the software in the SIMATIC PCS 7 environment

Drive ES PCS neo

Siemens SINAMICS drives can be controlled via SIMATIC PCS neo and operated and monitored on the OCM client with the SINAMICS library Drive ES PCS neo. The drive ES PCS neo faceplates make the data relevant for system operation available on the OCM client. The STARTER commissioning tool on the engineering server can also be used for parameter assignment, commissioning and detailed diagnostics of the SINAMICS drives.

© Siemens 2024

Selection and ordering data

Description	Article No.
Drive ES PCS 7 V9.0 SPx *)	
Block library for PCS 7 for the integration of drives in Classic Style (as predecessor)	
Requirement: PCS 7 V9.0 or higher	
Type of delivery: DVD-ROM Languages: en, de, fr, it, es With electronic documentation	
• Single-user license incl. 1 runtime license	**6SW1700-1JD00-0AA0**
• Runtime license (without data storage medium)	**6SW1700-5JD00-1AC0**
• Update service for single-user license	**6SW1700-0JD00-0AB2**
• Upgrade from V6.x/V7.x/V8.x/V9.x to V9.0 SPx *)	**6SW1700-1JD00-0AA4**
Drive ES PCS 7 APL V9.0 SPx *)	
Block library for PCS 7 for the integration of drives in APL Style (Advanced Process Library)	
Requirement: PCS 7 V9.0 or higher	
Type of delivery: DVD-ROM Languages: en, de, fr, it, es With electronic documentation	
• Single-user license incl. 1 runtime license	**6SW1700-1JD01-0AA0**
• Runtime license (without data storage medium)	**6SW1700-5JD00-1AC0**
• Update service for single-user license	**6SW1700-0JD01-0AB2**
• Upgrade of APL V8.x, V9.x to V9.0 SPx *) or Drive ES PCS 7 V6.x, V7.x, V8.x, V9.x classic to Drive ES PCS 7 APL V9.0 SPx *)	**6SW1700-1JD01-0AA4**
Drive ES PCS 7 V9.1 SPx *)	
Block library for PCS 7 for the integration of drives in Classic Style (as predecessor)	
Requirement: PCS 7 V9.1 or higher	
Type of delivery: CD-ROM Languages: en, de, fr, it, es With electronic documentation	
• Single-user license incl. 1 runtime license	**6SW1700-2JD00-0AA0**
• Runtime license (without data storage medium)	**6SW1700-5JD00-1AC0**
• Update service for single-user license	**6SW1700-0JD00-0AB2**
• Upgrade from V6.x/V7.x/V8.x/V9.x to V9.1 SPx *)	**6SW1700-2JD00-0AA4**
Drive ES PCS 7 APL V9.1 SPx *)	
Block library for PCS 7 for the integration of drives in APL Style (Advanced Process Library)	
Requirement: PCS 7 V9.1 or higher	
Type of delivery: CD-ROM Languages: en, de, fr, it, es With electronic documentation	
• Single-user license incl. 1 runtime license	**6SW1700-2JD01-0AA0**
• Runtime license (without data storage medium)	**6SW1700-5JD00-1AC0**
• Update service for single-user license	**6SW1700-0JD01-0AB2**
• Upgrade of APL V8.x, V9.x to V9.1 SPx *) or Drive ES PCS 7 V6.x, V7.x, V8.x, V9.x classic to Drive ES PCS 7 APL V9.1 SPx *)	**6SW1700-2JD01-0AA4**

Description	Article No.
Drive ES PCS neo V3.0 / V3.1	
Block library for SIMATIC PCS neo for the integration of SINAMICS drives	
Requirement: PCS neo V3.0 or higher	
Type of delivery V3.0: The SINAMICS library is a component of the SIMATIC PCS neo V3.0 product. Type of delivery V3.1: Integration via the import of a SINAMICS device type file (product support). License reference for the license code and the Certificate of License for the Drive ES PCS neo SINAMICS library via OSD Languages: de, en	
License for the Drive ES PCS neo SINAMICS library (engineering and runtime software)	**6SW1700-1JE01-0AH0**
Floating license for 1 engineering user on the engineering server	
A runtime license for a PCS neo Controller (single license for 1 installation)	
Runtime license Drive ES PCS neo SINAMICS library	**6SW1700-1JE00-1AH0**
To execute the function blocks for a SIMATIC PCS neo Controller	
Language-neutral, single license for 1 installation	
Type of delivery: Electronic Certificate of License (OSD)	

Options

Drive ES PCS 7 Software Update Service

A software update service can also be purchased for the Drive ES PCS 7 software. The user will automatically receive the latest software, service packs and full versions for one year after ordering.

The update service can only be ordered in addition to an existing (i.e. previously ordered) full version.

- Period of update service: 1 year

The update service is automatically extended by 1 further year unless canceled up to 6 weeks prior to expiration.

Description	Article No.
Drive ES PCS 7	
• Update service for single-user license	**6SW1700-0JD00-0AB2**
Drive ES PCS 7 APL	
• Update service for single-user license	**6SW1700-0JD01-0AB2**

More information

Further information is available on the internet at:
www.siemens.com/drive-es

*) Orders are automatically supplied with the latest Service Pack (SP).

© Siemens 2024

Overview

Configuring with EPLAN

EPLAN is an engineering software for configuring electrical installations. The EPLAN platform combines expert systems for various disciplines, such as electrical, fluid and EMC engineering (EMC = electrical, measuring and control engineering) as well as control cabinet and plant engineering. It provides the wiring information required to determine the optimal laying routes, connection lengths, bundle diameters, and design of the cable tree.

EPLAN Electric P8 – an EPLAN module – is CAE software specifically for configuring documentation and managing electrical automation projects for machines and systems. EPLAN Electric P8 offers the following functions:

- Creating circuit diagrams for control cabinets
- Managing article master data
- Automatic generation of bills of materials, terminal plans, PLC diagrams and overviews
- Preparation of the documentation for the configured system
- Design of the mechanical control cabinet configuration

EPLAN macros for SINAMICS components

EPLAN Electric P8 macros are available as downloads without charge, so that SINAMICS components can be easily and cost-effectively integrated into an EPLAN project. Macros are available for the following components:

- SINAMICS G120P, PM330 Power Modules
- SINAMICS G130 built-in units
- SINAMICS S120 chassis units
- SINAMICS DCM DC converters
- Line and motor-side components
- DC link components
- Control Units
- Supplementary system components

Using EPLAN Electric P8 macros substantially shortens the configuration time. All the necessary information about a component is supplied at the press of a button. This ensures that the data is up-to-date and correct – and mistakes/errors can be avoided.

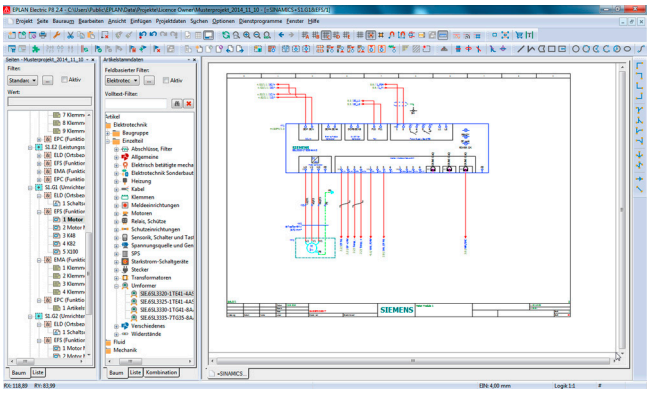

EPLAN user interface

The macros are provided in the file format EDZ (EPLAN Data Archived Zipped). An EDZ file is an archive for article master data, CAx data and macros. A macro in EDZ format contains the following data:

- Internal circuit diagrams
- Wiring diagrams
- Product master data
- Product images
- Data sheets

EPLAN Electric P8 macros for SINAMICS components are available in the following tools:

- Siemens Product Configurator (www.siemens.com/spc)
- CAx Onlinemanager
- Image database (download)

EPLAN projects for SINAMICS converter cabinet units

EPLAN projects are available for SINAMICS converter cabinet units, that simplify the configuration, and save time throughout the entire engineering process. EPLAN projects are available for the following converter cabinet units:

- SINAMICS G150
- SINAMICS S120 Cabinet Modules
- SINAMICS S150

The complete EPLAN project is digitally delivered.
The order is made by selecting the additional option **D01**.

© Siemens 2024

Overview

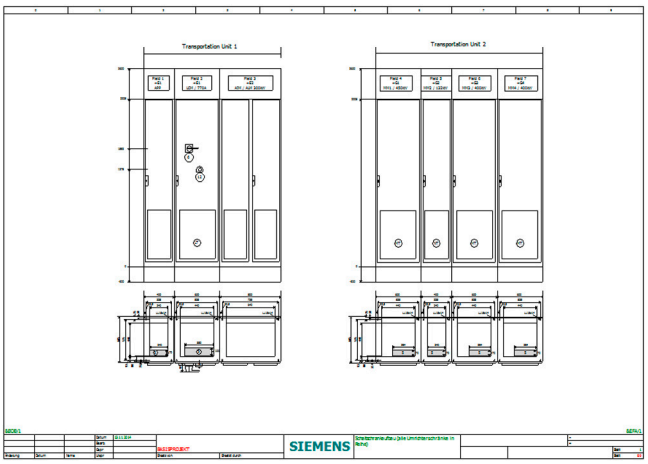

EPLAN project: Dimension drawing

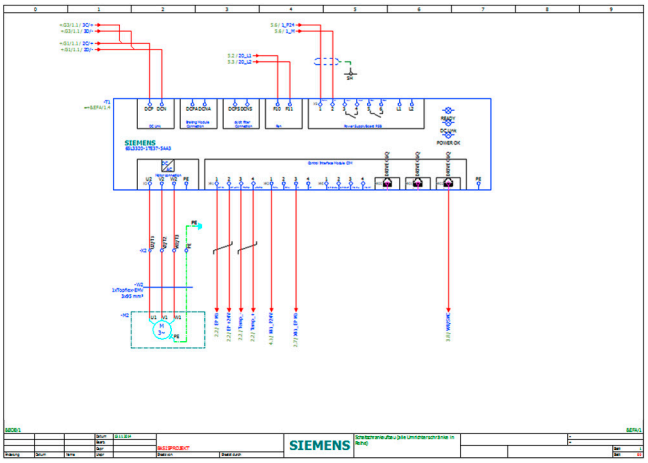

EPLAN project: Circuit diagram

The following data are delivered when the option **D01** is ordered:

- EPLAN project as a ZW1 file
- A PDF version of the project

The EPLAN project includes the following documentation components:

- Title sheet
- Table of contents
- List of the structure identifiers used
- General layout, external view
- General layout, internal view
- Circuit diagram
- Terminal diagram
- Spare parts list

Note:

The EPLAN project is always made available in the latest version of EPLAN. It is not possible to "downgrade" the EPLAN version.

© Siemens 2024

Overview

General procedure when engineering

The function description of the machine provides the basis for the configuration. The definition of the components is based on physical interdependencies and is usually carried out as follows:

Step	Description of configuration activity
1	Clarification of type of drive
2	Specification of the supplementary conditions and integration in the automation system
3	Definition of the load, calculation of the max. load torque, selection of the motor
4	Definition of the Motor Module
5	Repetition of steps 3 and 4 for additional axes
6	Calculation of the required DC link power and definition of the Line Module
7	Specification of the required control performance and selection of the Control Unit, definition of component cabling
8	Specification of the line-side power options (main switch, fuses, line filters, etc.) and cable cross-sections for system connection and motor connection
9	Definition of additional system components
10	Calculation of the current requirement for the 24 V DC supply for the components and specification of power supplies (SITOP devices, Control Supply Modules)
11	Specification of components for connection system
12	Configuration of drive line-up components
13	Thermal design of the control cabinet

Configuration begins with the mechanical interface to the machine. A suitable motor is selected according to the specified torques and speeds. A matching power unit is then also chosen. Depending on the requirements of the machine, the motor is supplied as a single drive via a Power Module or within a multi-motor drive group via a Motor Module. Once the basic components have been defined, the system components for matching to the electrical and mechanical interfaces are selected.

The SIZER for Siemens Drives engineering tool (integrated in the TIA Selection Tool) allows the correct components to be selected quickly and easily. Based on the torque and speed characteristics entered, SIZER for Siemens Drives (integrated in the TIA Selection Tool) guides the user through the configuring process, identifying suitable motors and matching SINAMICS power units and other system components.

Important information about SINAMICS S120 components that are needed to create a drive system subject to certain supplementary conditions can be found in the SINAMICS Low Voltage Engineering Manual, and in the online help for the SIZER for Siemens Drives engineering tool (integrated in the TIA Selection Tool).

© Siemens 2024

Overview

The electromagnetic compatibility describes – according to the definition of the EMC Directive – the "capability of a device to work satisfactorily in the electromagnetic environment without itself causing electromagnetic interference which is unacceptable for other devices present in this environment". To guarantee that the appropriate EMC Directives are observed, the devices must demonstrate a sufficiently high noise immunity, and also the emitted interference must be limited to acceptable values.

The product standard EN 61800-3 describes the EMC requirements placed on "Variable-speed drive systems".

A variable-speed drive system (or Power Drive System PDS) consists of the Control Unit and Power Module or Control Unit, Line Module, and Motor Module plus the relevant electric motors and encoders including connecting cables. The driven machine is not part of the drive system.

Environments

EN 61800-3 defines different limit values depending on the site of installation of the drive system, referred to as the first and second environments.

Residential buildings or locations at which the drive system is directly connected to a public low-voltage supply without intermediate transformer are defined as the **first environment**.

A **second environment** refers to all locations outside residential areas, or industrial sites which are supplied from the medium-voltage network via a separate transformer.

Categories

Four different categories are defined in EN 61800-3 Ed.2 depending on the installation site and the output power of the drive:

- **Category C1:** Drive systems for rated voltages <1000 V for unlimited use in the first environment.
- **Category C2:** Stationary drive systems for rated voltages <1000 V for use in the second environment. Use in the first environment is possible if the drive system is operated and installed by qualified personnel. The warning information and installation instructions supplied by the manufacturer must be observed.
- **Category C3:** Drive systems for rated voltages <1000 V for exclusive use in the second environment.
- **Category C4:** Drive systems for rated voltages ≥1000 V or for rated currents ≥400 A for use in complex systems in the second environment. An EMC plan must be drawn up.

The following diagram shows how the four categories are assigned to the first and second environments:

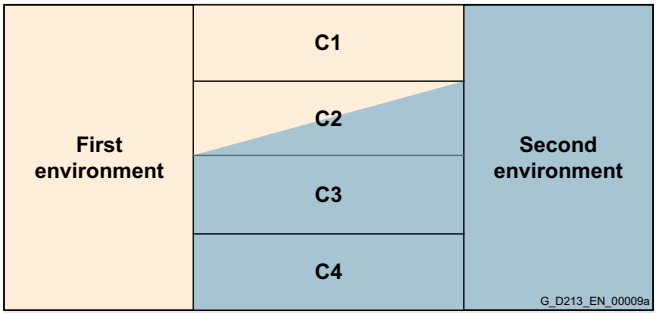

© Siemens 2024

Configuration

The SINAMICS S120 and SINAMICS S150 drive systems are basically suitable for operation in the second environment (Categories C3 and C4). The measures necessary for operation in the first and second environment (Category C2) are listed below.

Measures for complying with product standard EN 61800-3 second environment

Interference immunity

All SINAMICS S120 drive systems, SINAMICS S120 Cabinet Modules, and SINAMICS S150 are suitable for use in the second environment.

Regarding interference immunity, they can be used in both the **first** and **second environments**.

Interference emission – complying with Category C2 second environment

Regarding interference emission, to comply with the limit values according to EN 61800-3 second environment, Category C2, the following measures must be applied:

- The drive system must be installed in compliance with EMC regulations by appropriately trained professionals.
- The drive system requires a radio interference suppression filter, Category C2 (as optional external line filter with/without line reactor)
- The pulse frequency is less than or equal to the rated pulse frequency
- The maximum motor cable length is complied with (shielded)
- Line supply with grounded neutral point (TN/TT supply system)

Device-specific assignment of the measures to comply with product standard EN 61800-3 second environment, Category C2

SINAMICS S120 chassis			Measures for		
			Radio interference suppression filter, Category C2	Maximum pulse frequency f_p	Maximum motor cable length (shielded)
Devices	Line voltage	Frame size		kHz	m
Active Line Modules	380 ... 480 V 3 AC	FX ... JX GXL ... JXL [1]	External line filter required	4 [3]	300
	500 ... 690 V 3 AC	FX ... JX HXL and JXL [1]	External line filter required	4 [3]	300
Smart Line Modules	380 ... 480 V 3 AC	GX ... JX	External line filter required	4 [3]	300
	500 ... 690 V 3 AC	GX ... JX	External line filter required	4 [3]	300
Basic Line Modules	380 ... 480 V 3 AC	FB ... GD FBL and GBL [1]	External line filter plus line reactor required [2]	4 [3]	100
	500 ... 690 V 3 AC	FB ... GD FBL and GBL [1]	External line filter plus line reactor required [2]	4 [3]	100
Power Modules	380 ... 480 V 3 AC	FX and GX FL and GL [1]	External line filter plus line reactor required [2]	2	100

[1] For liquid-cooled devices on request

[2] Selection and ordering data for line filters and line reactors, see sections Line-side power components.

[3] Refers to the pulse frequency of the Motor Modules.

© Siemens 2024

Configuration

SINAMICS S120 Cabinet Modules, air-cooled [1]			Measures for		
			Radio interference suppression filter, Category C2	Maximum pulse frequency f_p	Maximum motor cable length (shielded)
Cabinet Modules	Line voltage	Frame size		kHz	m
Line Connection Modules for Active Line Modules (**L42**)	380 ... 480 V 3 AC	FX ... JX	Option L00	4 [3]	300
	500 ... 690 V 3 AC	FX ... JX	Option L00	4 [3]	300
Line Connection Modules for Smart Line Modules (**L44**)	380 ... 480 V 3 AC	GX ... JX	Option L00	4 [3]	300
	500 ... 690 V 3 AC	GX ... JX	Option L00	4 [3]	300
Line Connection Modules for Basic Line Modules (**L43**)	380 ... 480 V 3 AC	FB ... GD	Option L00 [2]	4 [3]	100
	500 ... 690 V 3 AC	FB ... GD	Option L00 [2]	4 [3]	100

SINAMICS S150			Measures for		
			Radio interference suppression filter, Category C2	Maximum pulse frequency f_p	Maximum motor cable length (shielded)
Converter cabinet units	Line voltage	Frame size		kHz	m
S150	380 ... 480 V 3 AC	FI+FX ... JI+JX	Option L00	4 [3]	300
	500 ... 690 V 3 AC	FI+FX ... JI+JX	Option L00	4 [3]	300

Interference emission – complying with Category C3 second environment

Covered by Active Interface Modules in chassis format in the standard version of all SINAMICS S120 Cabinet Modules, SINAMICS S150 converter cabinet units, and SINAMICS S120 Line Modules. A line reactor is required for Power Modules in chassis format.

The maximum cable lengths and pulse frequencies (see previous tables) must be taken into consideration.

Interference emission – complying with Category C4 second environment

When connected to IT line supplies, only devices without integrated filter are permissible. To limit symmetrical interference emission, suitable external filters without capacitors connected to ground must be used.

Further selected accessories are available from the "Siemens Product Partner for Drives Options"
www.siemens.com/drives-options-partner

Measures for complying with product standard EN 61800-3 first environment

The SINAMICS S120 drive systems, SINAMICS S120 Cabinet Modules air-cooled, and SINAMICS S150 are basically suitable for use in the second environment.

Regarding interference immunity, they can be used in both the **first and second environments**.

Interference emission – complying with Category C2 first environment

For use in the first environment, **in addition** to the requirements for use in the second environment, device-specific notes to maintain the **harmonic current** limits must be **taken into consideration**. Here, EMC product standard EN 61800-3 makes reference to the standards pertaining to harmonic currents: EN 61000-3-2 and EN 61000-3-12.

More information

Converters are equipment used on a professional basis, deployed in certain areas of business and industry – and are not operated in the general public domain.

Further information on SINAMICS S120 components, SINAMICS S120 Cabinet Modules, and SINAMICS S150, which are needed to create a drive system subject to certain supplementary conditions can be found in the SINAMICS Low Voltage Engineering Manual:
https://support.industry.siemens.com/cs/document/83180185

[1] For liquid-cooled Cabinet Modules on request

[2] Option L22 (scope of supply without line reactor) not permissible for use in Category C2 second environment.

[3] Refers to the pulse frequency of the Motor Modules.

© Siemens 2024

Overview

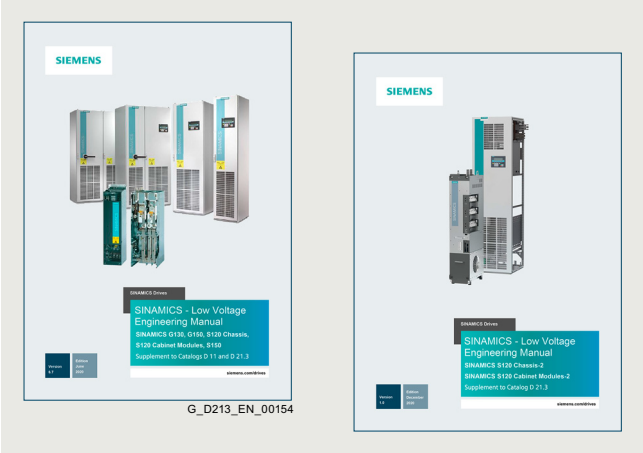

G_D213_EN_00154

To correctly select and configure the devices listed in this catalog, we would like to refer to the SINAMICS Low Voltage Engineering Manual part 1 and 2. This supplements the Catalogs D 11 and D 21.3, and is intended to simplify the handling of SINAMICS series devices.

This manual (1) is only available in electronic form and only in German and English. It is available as a PDF in the Information and Download Center:
https://support.industry.siemens.com/cs/document/83180185

The Engineering Manual contains general information on the basics of variable-speed electric AC drives, as well as detailed system descriptions and direct specifications for the following SINAMICS series devices:

- SINAMICS G130 Drive Converter Chassis Units (Catalog D 11)
- SINAMICS G150 Drive Converter Cabinet Units (Catalog D 11)
- SINAMICS S120 Modular Built-in Units (Catalogs D 21.3 and D 21.4)
- SINAMICS S120 Modular Cabinet Units (Catalog D 21.3)
- SINAMICS S150 Converter Cabinet Units (Catalog D 21.3)

The Engineering Manual is divided into several sections with different layouts.

The first chapter – Basics and system description – essentially explains the physical basics of variable-speed electric AC drives and provides a generally valid system description of the SINAMICS series devices.

The second chapter – EMC design guideline – discusses the topic of **E**lectromagnetic **C**ompatibility (EMC) and provides all the information required to configure and install drives with the specified SINAMICS devices in compliance with EMC guidelines.

The following chapters – Configuration of the SINAMICS G130, G150, S120 built-in units, S120 Cabinet Modules and S150 devices – discuss device-specific topics, which go beyond the contents of the generally valid system descriptions.

The information provided addresses technically qualified and trained personnel. It is the responsibility of the configuration engineer to evaluate the completeness of the information provided for the respective application. This person also has the final system responsibility for the entire drive or the plant.

For the device-specific topics for the SINAMICS S120 Chassis-2 and SINAMICS S120 Cabinet Modules-2 series of devices, Catalog D 21.3 is supplemented by the SINAMICS Low Voltage SINAMICS S120 Chassis-2 and Cabinet Modules-2 Engineering Manual (2).

The Engineering Manual contains general information on the basics of variable-speed electric AC drives, as well as detailed system descriptions and direct specifications for the following SINAMICS series devices:

- Modular Built-In Units SINAMICS S120 Chassis-2 (Catalog D 21.3)
- Modular Cabinet Units SINAMICS S120 Cabinet Modules-2 (Catalog D 21.3)

The manual is only available as a document in electronic form in German and English:
https://support.industry.siemens.com/cs/document/109791862

© Siemens 2024

Notes

© Siemens 2024

10/2 **Partner at Siemens**

10/3 **Industry Services**
10/4 Portfolio overview
10/6 Online Support

10/7 **Service & Support**
10/7 Extension of warranty

10/9 **Training**
10/9 Training Services – SITRAIN
10/11 Range of training courses

10/13 **Spare parts services**
10/12 Field and maintenance services
10/13 Spare parts services
10/16 Repair services

10/17 **SPARES on Web**

10/18 **mySupport documentation**

10/19 **Documentation**

© Siemens 2024

Overview

Partners at Siemens

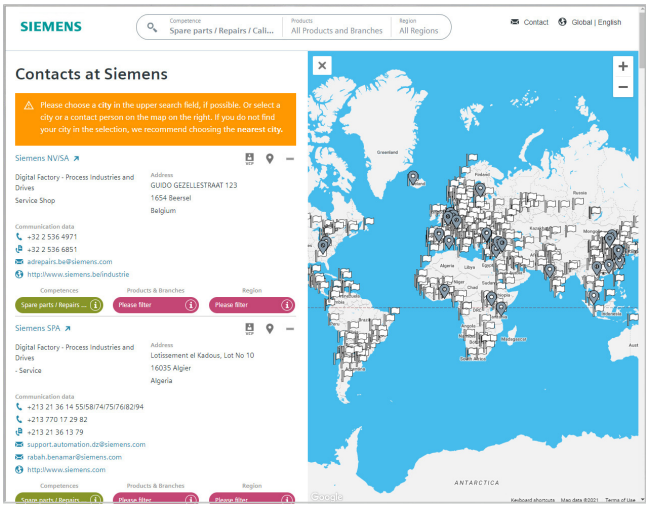

At your service locally, around the globe for consulting, sales, training, service, support, spare parts on the entire portfolio of Siemens.

Your partner can be found in our Personal Contacts Database at: www.siemens.com/automation-contact

You start by selecting

- the required competence,
- products and branches,
- a country and a city

or by a

- location search or free text search.

© Siemens 2024

Overview

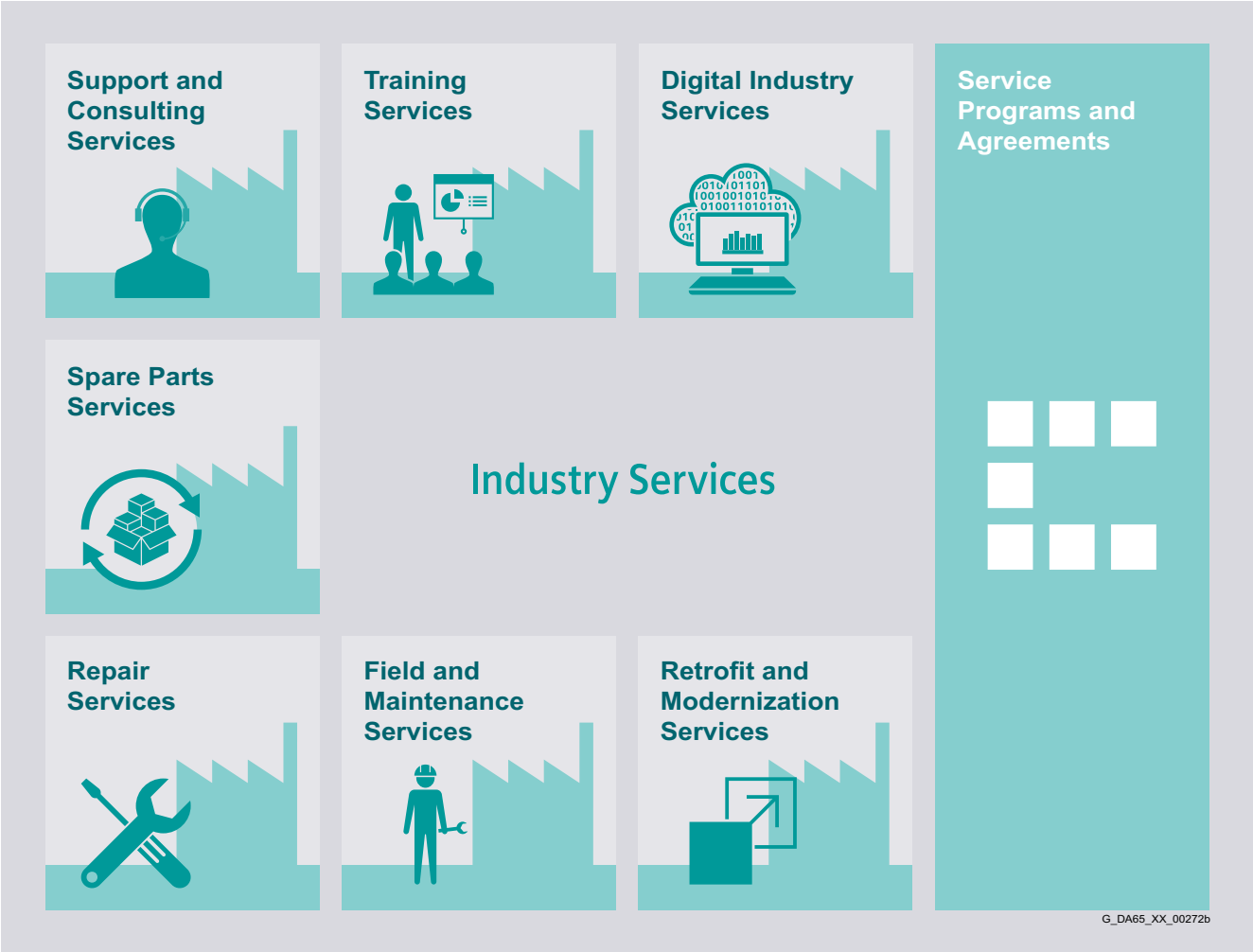

Keep your business running and shaping your digital future – with Industry Services

Optimizing the productivity of your equipment and operations can be a challenge, especially with constantly changing market conditions. Working with our service experts makes it easier. We understand your industry's unique processes and provide the services needed so that you can better achieve your business goals.

You can count on us to maximize your uptime and minimize your downtime, increasing your operations' productivity and reliability. When your operations have to be changed quickly to meet a new demand or business opportunity, our services give you the flexibility to adapt. Of course, we take care that your production is protected against cyber threats. We assist in keeping your operations as energy and resource efficient as possible and reducing your total cost of ownership. As a trendsetter, we ensure that you can capitalize on the opportunities of digitalization and by applying data analytics to enhance decision making: You can be sure that your plant reaches its full potential and retains this over the longer lifespan.

You can rely on our highly dedicated team of engineers, technicians and specialists to deliver the services you need – safely, professionally and in compliance with all regulations. We are there for you, where you need us, when you need us.

www.siemens.com/digital-enterprise-services

© Siemens 2024

Overview

Digital Industry Services

Digital Industry Services make your industrial processes transparent to gain improvements in productivity, asset availability, and energy efficiency.

Production data is generated, filtered and translated with intelligent analytics to enhance decision-making.

This is done whilst taking data security into consideration and with continuous protection against cyber-attack threats.

www.siemens.com/digital-enterprise-services

Support and Consulting Services

Industry Online Support site for comprehensive information, application examples, FAQs and support requests.

Technical and Engineering Support for advice and answers for all inquiries about functionality, handling, and fault clearance. The Service Card as prepaid support for value added services such as Priority Call Back or Extended Support offers the clear advantage of quick and easy purchasing.

Information & Consulting Services, e.g. SIMATIC System Audit; clarity about the state and service capability of your automation system or Lifecycle Information Services; transparency on the lifecycle of the products in your plants.

https://support.industry.siemens.com/cs/ww/en/sc/2235

Training Services

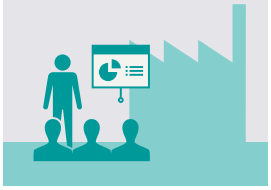

From the basics and advanced to specialist skills, SITRAIN courses provide expertise right from the manufacturer – and encompass the entire spectrum of Siemens products and systems for the industry.

Worldwide, SITRAIN courses are available wherever you need a training course in more than 170 locations in over 60 countries.

https://support.industry.siemens.com/cs/ww/en/sc/2226

Spare Parts Services

Spare Parts Services are available worldwide for smooth and fast supply of spare parts – and thus optimal plant availability. Genuine spare parts are available for up to ten years. Logistic experts take care of procurement, transport, custom clearance, storage and order management. Reliable logistics processes ensure that components reach their destination as needed.

Since not all spare parts can be kept in stock at all times, Siemens offers a preventive measure for spare parts provisioning on the customer's premises with optimized **Spare Parts Packages** for individual products, custom-assembled drive components and entire integrated drive trains – including risk consulting.

Asset Optimization Services help you design a strategy for parts supply where your investment and carrying costs are reduced and the risk of obsolescence is avoided.

https://support.industry.siemens.com/cs/ww/en/sc/2110

© Siemens 2024

Overview

Repair Services are offered on-site and in regional repair centers for fast restoration of faulty devices' functionality.

Also available are extended repair services, which include additional diagnostic and repair measures, as well as emergency services.

https://support.industry.siemens.com/cs/ww/en/sc/2154

Provide a cost-effective solution for the expansion of entire plants, optimization of systems or upgrading existing products to the latest technology and software, e.g. migration services for automation systems.

Service experts support projects from planning through commissioning and, if desired over the entire extended lifespan, e.g. Retrofit for Integrated Drive Systems for an extended lifetime of your machines and plants.

https://support.industry.siemens.com/cs/ww/en/sc/2286

Siemens specialists are available globally to provide expert field and maintenance services, including commissioning, functional testing, preventive maintenance and fault clearance.
All services can be included in customized service agreements with defined reaction times or fixed maintenance intervals.

https://support.industry.siemens.com/cs/ww/en/sc/2265

A technical Service Program or Agreement enables you to easily bundle a wide range of services into a single annual or multi-year agreement.

You pick the services you need to match your unique requirements or fill gaps in your organization's maintenance capabilities.

Programs and agreements can be customized as KPI-based and/or performance-based contracts.

https://support.industry.siemens.com/cs/ww/en/sc/2275

© Siemens 2024

Overview

Siemens Industry and Online Support with some 1.7 million visitors per month is one of the most popular web services provided by Siemens. It is the central access point for comprehensive technical know-how about products, systems and services for automation and drives applications as well as for process industries.

In connection with the challenges and opportunities related to digitalization you can look forward to continued support with innovative offerings.

© Siemens 2024

Overview

SINAMICS 120 Chassis

Service protect

Service Protect allows our customers to purchase an extended period of manufacturer liability of up to 5 years.

Extended warranty

Siemens offers for SINAMICS S120 chassis units an extended warranty up to 6½ years:

- 12 months of standard warranty
- Optional extension via Service Protect
  - 6 months free of charge after product registration at: https://myregistration.siemens.com
  - chargeable for additional 3 or 5 years.

Depending on the hardware product, the correct service MLFB with an assignment list must be chosen.
More information is available at:
https://support.industry.siemens.com/cs/ww/en/sc/4842

SINAMICS 120 Cabinet Modules and SINAMICS S150 cabinet units

We provide the option of extending the warranty period beyond the normal period for our SINAMICS S120 Cabinet Modules and SINAMICS S150 cabinet units. The standard warranty period, as listed in our standard conditions for the supply of services and products, is 12 months.

Extension of warranty when ordering new products

When ordering new products, it is possible to extend the standard warranty period for an additional price. Various extension periods can be selected.

Extension of warranty for converters	
Additional ordering data -Z with order code	Additional text
Q80	Extension of the warranty period by 12 months to a total of 24 months (2 years) after being delivered
Q81	Extension of the warranty period by 18 months to a total of 30 months (2½ years) after being delivered
Q82	Extension of the warranty period by 24 months to a total of 36 months (3 years) after being delivered
Q83	Extension of the warranty period by 30 months to a total of 42 months (3½ years) after being delivered
Q84	Extension of the warranty period by 36 months to a total of 48 months (4 years) after being delivered
Q85	Extension of the warranty period by 48 months to a total of 60 months (5 years) after being delivered

Overview of the extension of warranty

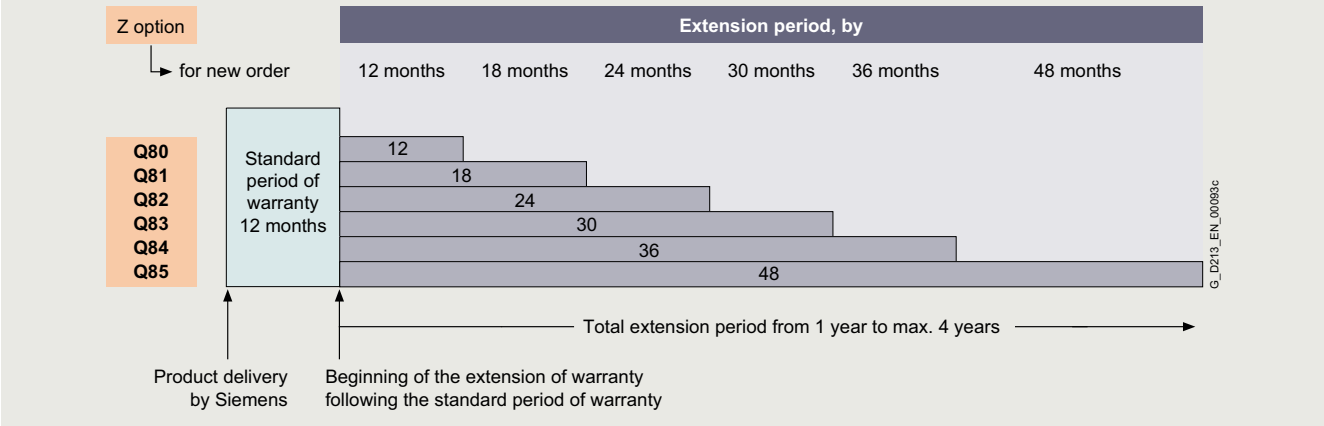

© Siemens 2024

Overview

Conditions for an extension of warranty:

1. The warranty period can be extended only once, i.e. it is not possible to extend an extension.
2. The scope of services provided by an extension of warranty includes all material and work expenditure by Siemens for rectification of the damage and, where applicable, all travel costs and expenses.
3. For all extension periods of warranty, when ordering a new product and when reordering, the final destination of the product must be known (region in which the equipment will be finally installed). Please contact your Siemens representative for the purpose of providing this information.
4. The general storage conditions described in the operating instructions must be adhered to, especially the specifications for long-term storage. These specifications must be requested separately from Siemens if necessary.
5. Commissioning must be performed by appropriately qualified personnel. When making warranty claims, under certain circumstances, it may be necessary to submit the commissioning report to the department making the decision.
6. For all extensions, all of the regular maintenance intervals must be complied with according to what is specified in the operating instructions. When ordering the appropriate maintenance, this must be carried out by Siemens or by personnel authorized by Siemens. The corresponding maintenance documentation and history must be submitted when making warranty claims.
7. The operating conditions correspond to the specifications and data provided in the operating instructions, in the engineering manual or special conditions specified in the specific contract.
8. The extension of warranty excludes wearing parts such as fans or filters. This does not apply if it can be clearly proven that the failure is a premature one.
9. Otherwise, the general conditions regarding warranty apply as agreed in the delivery contract.

© Siemens 2024

Introduction

Learn the way you like it – with SITRAIN

SITRAIN imparts a wide range of technical knowledge for all industries and applications. Our offering is oriented toward the needs of learners and the demands of innovative companies. Get pleasure out of learning - thanks to innovative learning methods, personal support, and knowledge that will help you in your work and further development. For successful, flexible, and continuous learning.

Education and training directly from the manufacturer

SITRAIN provides you with training from the industrial product and solution portfolio from Siemens and benefits from 30 years of expertise in technical training. Take a look at the many options for expanding your knowledge with SITRAIN and find the course that meets your needs! The following training and further education units are available to you for your individual knowledge building:

Industrial Automation Systems SIMATIC

Training available for:
SIMATIC S7-1500. TIA Portal, SIMATIC S7-300/400, SIMATIC S7-1200

Drive Technology

Training available for:
SINAMICS S120 and SINAMICS G120 low-voltage converters, SINAMICS G130 / G150 / G180 / S150

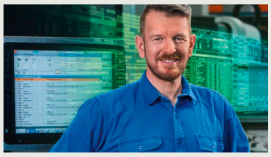

SINUMERIK CNC automation system

Training available for:
SINUMERIK 840D, SINUMERIK 840D sl and SINUMERIK ONE

Process Control Systems

Training available for:
SIMATIC PCS 7, SIMATIC PCS neo

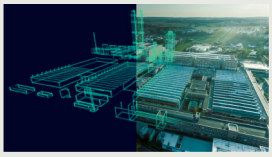

Digital Enterprise

Training available for:
Openness, SIMIT, OPC UA, Industrial Edge, Virtual commissioning

Industrial Communications

Training available for:
PROFINET, SCALANCE, R UGGEDOM, Industrial Ethernet, Fieldbus communication, Industrial Security, Remote communication

Identification and Locating

Training available for:
RFID, RTLS-Systems

Operator Control and Monitoring Systems

Training available for:
SIMATIC WinCC Unified in TIA Portal, SIMATIC WinCC in TIA Portal, SIMATIC WinCC V7x

Motion Control System SIMOTION

Training available for:
SIMOTION (Programming, Commissioning, Diagnostics, Service)

Smart Infrastructure

Training available for:
SIRIUS, SENTRON, SIVACON, ALPHA, SIMOCODE, Circuit breakers

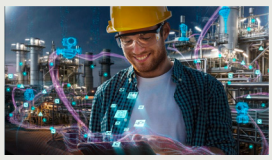

Process Analytics & I nstrumentation

Training is available for process analytics and instrumentation, explosion protection, process gas chromatographs

Additional training offer

SIMOVE with Automated Guided Vehicles (AGV), SIPLUS CMS, Guidelines and standards for control cabinets

© Siemens 2024

Introduction

Different learning formats and methods for maximum learning success

With our SITRAIN training formats, you learn in the way that best suits your preferences and routine. You decide whether you would rather take online training or face-to-face training. It is up to you whether you would like to study on demand or at fixed times.

With a personal learning consultant, in the team, or on your own – you can explore all the possibilities.

Discover our three learning formats:

Learning Event

SITRAIN Learning Events are the perfect choice when you want to achieve a defined learning goal in the shortest possible time. You learn in a protected learning environment outside of the daily work routine under the guidance of a learning consultant - virtually, in the training center, or at your company.

Learning Membership SITRAIN Access

With SITRAIN access, you enter a world of extensive and constantly expanding self-study units on our digital learning platform for industry. With SITRAIN access, you can implement a modern learning culture in your team or company with independent and continuous learning.

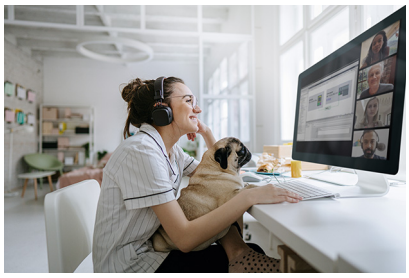

Learning Journey

The Learning Journey is the perfect combination of units taken live and self-study units for sustainable learning success. The modular approach enables simple integration into your daily work. This also includes one-year membership for using the SITRAIN access digital learning platform.

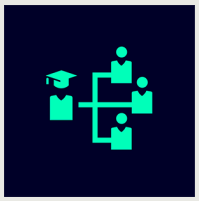

Live

Learn together with others, simultaneously and guided by a learning consultant. Online, in the SITRAIN training center or at your company.

Self-reliant

Expand your knowledge self-determined with industry learning and work on your learning units at your own pace and according to your own schedule.

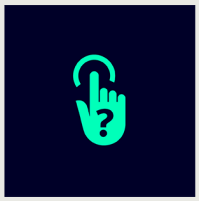

On demand

Get the knowledge you need, exactly when you need it. Be it to answer a current question or to work on a special topic.

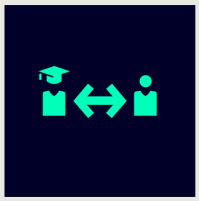

Individual

Talk directly with the learning consultant, clarify detailed questions and get personal coaching for transferring the learned topics to your own application.

Training cases catalog

https://www.siemens.com/sitrain-catalog-training-cases

www.siemens.com/sitrain

Find your local offer here

© Siemens 2024

Overview

Range of training courses for the SINAMICS S120 and SINAMICS S150 drive systems

Here you will find an overview of the training courses available for SINAMICS S120 and SINAMICS S150.

The courses are modular in design and are directed at a variety of target groups as well as individual customer requirements.

The system overview will acquaint decision-makers and sales personnel with the system very quickly.

The basic and follow-up courses are guaranteed to provide all of the technical knowledge that service personnel will need for commissioning and service.

All courses contain as many practical exercises as possible in order to enable intensive and direct training on the drive system and with the tools in small groups.

You will find further information about course contents and dates on the internet at: www.siemens.com/sitrain-personal.

Title (all courses are available in English and/or German)	**Target group** Sales personnel, planners, decision-makers	Commissioning engineers, programmers	Service personnel, maintenance technicians	**Duration**	**Course code**
SINAMICS S120 Designing and Engineering	✓	–	–	5 days	DR-S12-PL
SINAMICS S120 Parameterizing and Commissioning with STARTER	–	✓	–	5 days	DR-S12-PM
SINAMICS S120 Parameterizing and Commissioning in the TIA Portal	–	✓	–	5 days	DR-S12-PMT
SINAMICS S120 Parameterizing Advanced	–	✓	–	5 days	DR-S12-PA
SINAMICS S120 Parameterizing Safety Integrated	–	✓	–	4 days	DR-S12-SAF
SINAMICS S120 Switch to TIA-Portal	–	✓	–	3 days	DR-S12-UP
SINAMICS S120 Parameterizing and Optimization	–	✓	–	5 days	DR-S12-OPT
SINAMICS S120 Diagnostics and Service	–	–	✓	5 days	DR-S12-DG
SINAMICS S120 Diagnostics and Service in the TIA Portal	–	–	✓	5 days	DR-S12-DGT
SINAMICS S120 Diagnostics on Chassis and Cabinet Units	–	✓	✓	3 days	DR-S12-CHA

© Siemens 2024

Field and Maintenance Services

Overview

Efficient and cost-effective maintenance strategies for the entire product lifecycle

For you as an industry plant operator, maximum system productivity is your top priority.

Regular machine and plant maintenance performed by qualified service experts helps you ensure top plant performance for the long term.

For more information visit us at:
www.siemens.com/field-maintenance-services

General overhaul

Overview

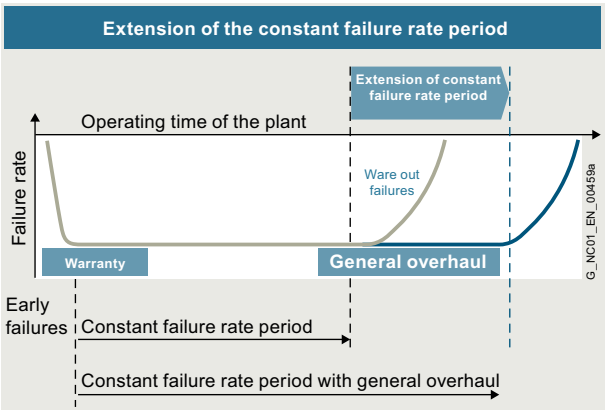

Extension of phases with a constant failure rate

Machines and plants are expected to have a long service life. The service life of electronic components and mechanical parts is, however, limited and normally shorter than the planned machine/plant operating times. For higher availability of the machines or plants, we offer a general overhaul (preventive maintenance) for electronic components and motors at favorable conditions.

During the planned general overhaul, wear parts and aging parts are replaced in accordance with their stated service life so as to reduce unplanned downtimes. In the case of motors, replacement of bearings and encoders is also offered in addition to a general overhaul.

If a fault is detected during a general overhaul, troubleshooting and repair will be performed after requesting confirmation.

In the case of severe wear or major damage, we offer an "as new" spare part instead of a general overhaul for reasons of quality.

Benefits

- Preventive replacement of wear parts and aging parts in accordance with their stated service life
- Reduction in unplanned plant stoppages
- Enhanced production reliability
- Extended availability of your machines/plants
- New liability for defects for 12 months for components which have undergone a general overhaul
- Low price

More information

You can find more information on the internet at:
https://support.industry.siemens.com/cs/sc/2120

Contact information for your local Siemens office or national company is available on the internet at:
www.siemens.com/automation-contact

Function check

Overview

A check is made to ensure that the components function reliably.

The first step involves cleaning the components. After that, all hardware, software and firmware enhancements are implemented that are known to the development, production, suppliers, service and quality management departments. Using a comprehensive test concept of series production, all functions of the software, firmware, ASICs, and complex and less complex function blocks are checked.

If a fault is detected during an overhaul, troubleshooting and repair will be performed after requesting confirmation. In the case of severe wear or major damage, we offer an "as new" spare part.

Benefits

- The component is checked and can be deployed again
- The component contains all the known improvements
- The customer's own spare parts stock is up-to-date
- Low price

More information

You can find more information on the internet at:
https://support.industry.siemens.com/cs/sc/2122

Contact information for your local Siemens office or national company is available on the internet at:
www.siemens.com/automation-contact

© Siemens 2024

Spare Parts Services

Overview

Be safe in an emergency – always the right spare part at hand

Minimum downtimes and optimum use of staff and equipment are key to long-term success in industry.

But when a failure happens, it can bring the entire plant to a standstill in the worst case. Since even the best components will eventually reach the end of their lifecycle, our Spare Parts Services form the essential basis for smooth operation.

For more information visit us at:
www.siemens.com/spare-parts-services

Delivery of spare parts

Overview

In every sector worldwide, plants and systems are required to operate with ever increasing availability. Not having a specific spare part at the right time can result in considerable costs.

We will provide you with the support you need to prevent a standstill from occurring in the first place: with a worldwide network and optimized logistics chains.

Order type	Logistics service	Remark
Standard	Cost-optimized: Contracted shipping company	Delivery within the normal national delivery times by the contracted shipping company
Plant down-time	Time-optimized: Express, courier, collection	You choose the shortest possible delivery time as it suits you best: • Delivery by means of collection or courier service • Delivery by means of express delivery
Emergency service	Special logistics: Courier	Spare parts can be ordered from us 24/7 – even outside normal working hours, as well as on weekends or national holidays. • Delivery by means of courier service

Benefits

- New liability for spare part defects
- Long-term spare parts availability
- Optimum system compatibility

More information

You can find more information on the internet at:
https://support.industry.siemens.com/cs/sc/2112

Contact information for your local Siemens office or national company is available on the internet at:
www.siemens.com/automation-contact

© Siemens 2024

Delivery as exchange product

Overview

With many products, we also offer you the option of an exchange in addition to the simple delivery of spare parts. This has the advantage that you not only receive the spare part quickly, but are able to return the defective device to us for a credit. You therefore receive our spare part at the lower exchange price.

A credit will be awarded on condition that the repair code indicates that repurchasing is admissible, a replacement is obtained from the spare parts store, and that the returned product is repairable.

The order type and logistics service determine the delivery of spare parts:

Order type	Logistics service	Remark
Standard	Cost-optimized: Contracted shipping company	Delivery within the normal national delivery times by the contracted shipping company
Plant downtime	Time-optimized: Express, courier, collection	You choose the shortest possible delivery time as it suits you best: • Delivery by means of collection or courier service • Delivery by means of express delivery
Emergency service	Special logistics: Courier	Spare parts can be ordered from us 24/7 – even outside normal working hours, as well as on weekends or national holidays. • Delivery by means of courier service

Return

For product returns, we require the following information:

- Reason for return
- If defective: detailed description of the fault
- Machine number
- Machine/system manufacturer
- End user

We will then be able to provide you with additional information in the repair report/inspection report regarding the diagnosis/inspection as well as information about the completed repair.

Benefits

- Price benefits through the option of returning defective parts
- A spare part is available immediately in the event of failure
- New liability for spare part defects
- Long-term spare parts availability
- Optimum system compatibility

More information

You can find more information on the internet at:
https://support.industry.siemens.com/cs/sc/2112

Contact information for your local Siemens office or national company is available on the internet at:
www.siemens.com/automation-contact

Component upgrade service

Overview

Upgrade service for components: From OLD to NEW

Machines and plant are expected to have a long service life. The service life of the electronic components is, however, limited and normally shorter than the planned machine/plant operating times. To ensure that the required extended availability of the machines/plants is achieved, we offer an upgrade service for components at an attractive price.

In the course of their lifecycle, electronic components are normally redesigned/upgraded several times. With the upgrade service for components, you will always receive the latest technology.

A planned component upgrade from OLD to NEW helps to prevent unplanned machine stoppages and supports a safer and longer machines/plant availability. The upgrade service is mainly offered for older components that will soon be discontinued.

For information about the latest potential upgrades, please contact your local contact person. The upgrade service for components can only be offered to machine manufacturers or operators.

Benefits

- Price benefit through upgrade service
- New liability for new component defects
- Extended availability of your machines/plants
- Prevention of component failures due to wear and aging
- Prevention of machine stoppages due to unavailability of spare parts
- Reduced spare parts inventories
- Latest technology
- Easier servicing due to fewer variants
- Industry Services through Siemens are assured for the future

More information

You can find more information on the internet at:
https://support.industry.siemens.com/cs/sc/2112

Contact information for your local Siemens office or national company is available on the internet at:
www.siemens.com/automation-contact

© Siemens 2024

Return of diagnostic parts

Overview

Spare parts used for diagnostic purposes from the spare parts store can be returned within 3 months and a credit note for up to 85% is issued.

For unused spare parts in their original packaging, you will receive a credit of 100% in which case you will be charged a fixed price for handling.

Benefits

- Can be used for diagnostics
- Reduced spare parts inventories
- Low costs

More information

You can find more information on the internet at:
https://support.industry.siemens.com/cs/sc/2112

Contact information for your local Siemens office or national company is available on the internet at:
www.siemens.com/automation-contact

Stock reduction in spare parts store

Overview

Fast spare part delivery by Siemens enables manufacturers and plant operators to reduce their spare part stocks. For this purpose, we offer an analysis that shows exactly which parts should remain in the customer warehouse for a particular machine stock and which can be purchased directly from Siemens.

Benefits

- Reduced costs
- Stock optimization
- Minimization of fault downtimes

More information

You can find more information on the internet at:
https://support.industry.siemens.com/cs/sc/2112

Contact information for your local Siemens office or national company is available on the internet at:
www.siemens.com/automation-contact

Extended spare part availability

Overview

We normally retain spare parts for all products and systems for a period of 10 years after discontinuation of product marketing.

In individual cases, when we do not carry spare parts, we will offer a repair.

For a wide range of products and systems, spare parts availability is extended. We can provide you with the current spare parts availability for your machines/plants as a service once you have registered online with identSNAPSHOT.
www.siemens.com/identsnapshot

If you require longer availability of spare parts for your machines/plants, please contact your local contact person.

Benefits

- Higher plant availability
- Security of investment
- Reduction of lifecycle costs

More information

You can find more information on the internet at:
https://support.industry.siemens.com/cs/sc/2112

Contact information for your local Siemens office or national company is available on the internet at:
www.siemens.com/automation-contact

© Siemens 2024

Overview

High quality support in a breakdown – either at your premises or at a certified Siemens workshop

Even the best components eventually reach the end of their lifecycle. The result: downtimes and reduced productivity.

Our Repair Services comprise all service tasks over the entire product lifecycle, from functional maintenance to increasing performance. In this way, our service experts analyze, repair, maintain and optimize your components at Siemens manufacturer level, so that costly downtimes are minimized.

For more information visit us at:
www.siemens.com/repair-services

Downtimes cause problems in the plant as well as unnecessary costs. We can help you to reduce both to a minimum – with our worldwide repair facilities. The advantages for you are: Defects can be rectified before they cause further harm.

Repair is a favorable option when you have specific reasons for not wanting to replace the defective device or part with a new one (delivery as exchange product).

We maintain a global network of Siemens repair shops and certified partners to ensure that we will always be able to process your repairs quickly.

We can offer you different types of repair depending on your requirements:

Normal repair

Normal repair at standard conditions normally takes 10 working days following receipt of the defective item at our repair shop.

Fast repair

In particularly urgent cases, we offer you the option of a fast repair within 1 or 2 working days for many products at additional cost.

Mobile repair service

We come to you and perform the required repairs on site, for example, when the device or component cannot be removed due to its weight.

Function repair

A function repair is the same as a normal repair but excludes the repair of cosmetic defects, e.g. scratches, inscriptions, discoloration. The conditions applicable to function repairs should be observed in this case. The function repair can only be offered to machine manufacturers or operators. Please contact your local contact person for more information.

Long Life Repair

As a rule, a spare parts and repair service is offered for electronics products for a period of up to ten years after the period of active marketing. After this time, these services are generally only available in the case of acknowledged warranty conditions. Not so at Siemens. The Long Life Repair Service is available for selected electronic products and standard motors. Siemens thus offers a complete solution that includes short delivery times, long availability of original spare parts, economical repairs and a service availability of up to 25 years.

Benefits

- Short downtimes for machines and plants
- Only certified original parts are used
- Additional services from Siemens:
  - Longer availability of your machine/plant through the early replacement of wear parts and aging parts
  - Highest standards of quality
  - Use of the comprehensive test concept of series production, including software, firmware, ASICs, complex function blocks, etc.
  - Implementation of all the hardware and software/firmware enhancements known from development, production, suppliers, and service and quality management departments.
- Information supplied by repair report/inspection report

More information

You can find more information on the internet at:
https://support.industry.siemens.com/cs/sc/3098

Contact information for your local Siemens office or national company is available on the internet at:
www.siemens.com/automation-contact

© Siemens 2024

Overview

Spares on Web – online identification of spare parts

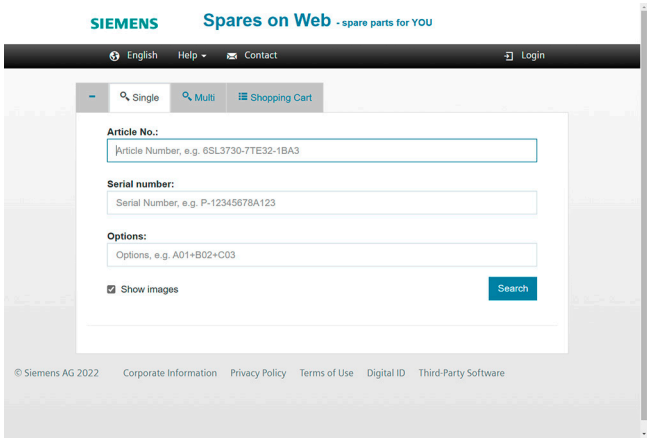

Spares on Web is a web-based tool for identifying spare parts. After you have entered the Article No. and serial number, the spare parts available for the relevant unit are displayed.

www.siemens.com/sow

© Siemens 2024

mySupport documentation

Overview

mySupport documentation – compiling personal documents

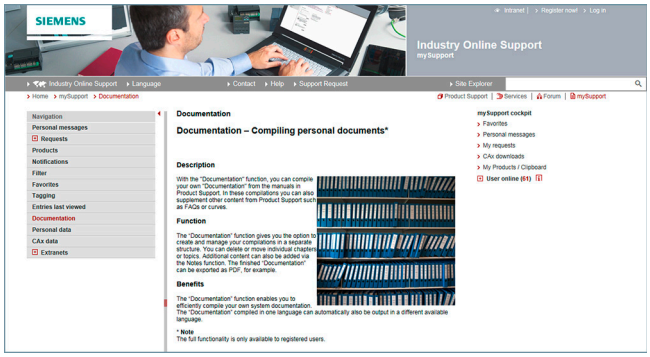

mySupport documentation is a web-based system for generating personalized documentation based on standard documents and is part of the Siemens Industry Online Support portal.

In mySupport, a personal document library can be created in the "Documentation" category. This library can be accessed online in mySupport or also be generated in various formats for offline use.

Previously, this functionality was available in the My Documentation Manager for configurable manuals. Due to the integration in mySupport, all entries of the Industry Online Support can now be imported into the personal document library, including FAQs or product notifications.

If you have already worked with the My Documentation Manager, all of the previously created libraries will continue to be available without restrictions in mySupport.

In addition, the personal library in mySupport can be shared with other mySupport users. In this way, a collection of relevant documents can be created very effectively and used together with other mySupport users all over the world.

You must register/log in for configuring and generating/managing.

Benefits

- Display
  View, print or download standard documents or personalized documents
- Configure
  Transfer standard documents or parts of them to personalized documents
- Generate/Manage
  Generate and manage personalized documents in the formats PDF, RTF or XML in all available languages

Function

Opening mySupport documentation in the Industry Online Support portal

- Via the product support, entry type "Manual":
  https://support.industry.siemens.com/cs/ww/en/ps/man
  By clicking on the required version of the manual and then "Show and configure", the manual opens in a modular view, where you can navigate from topic to topic. Here the direct link to a topic can be used and made available to other users. The selected document can be added to the personal library via "mySupport Cockpit" > "Add to mySupport documentation".
- Via the direct link
  https://support.industry.siemens.com/my/ww/en/documentation/advanced
  After logon/registration, the online help is displayed as the current document.

More information

More information is available on the internet at

- https://support.industry.siemens.com/my/ww/en/documentation
- https://support.industry.siemens.com/cs/helpcenter/en/index.htm?#persoenliche_bibliothek_aufbauen.htm

© Siemens 2024

Overview

SINAMICS S120 Cabinet Modules and Cabinet Modules-2, SINAMICS S150 Converter Cabinet Units

The documentation is provided exclusively in digital form and comprises the following sections:

- Description
- Installation instructions
- Commissioning guide
- Function description
- Maintenance information
- Configuration manual
- Lists of spare parts
- Equipment-specific documents such as circuit diagrams, dimensional drawings, layout diagrams, and terminal diagrams

Documentation in English/German is supplied as standard with the device (in PDF format).

If one of the languages subsequently listed is required, when ordering this should be specified using the corresponding option order code (see Description of options):

Language	Order code
English/French	**D58**
English/Spanish	**D60**
English/Italian	**D80**
English/Chinese	**D91**
English/Portuguese (Brazil)	**D93**
English/Russian	**D94**

Configuring documents/documentation available for downloading at:

For SINAMICS S120 Cabinet Modules and Cabinet Modules-2
https://support.industry.siemens.com/cs/ww/en/ps/13233/man

For SINAMICS S150
https://support.industry.siemens.com/cs/ww/en/ps/13234/man

SINAMICS S120 chassis and chassis-2 units

Comprehensive documentation is available for the SINAMICS S120 chassis and chassis-2 units, including Operating Instructions, Equipment Manuals, List Manuals and the Configuration Manual.

Information is available in the following formats:

- PDF file
- Configuring documents/documentation available for downloading at:

https://support.industry.siemens.com/cs/ww/en/ps/13231/man

Application

Explanations for the manuals:

- **Operating Instructions**
  contain all the information needed to install the device and make electrical connections, information about commissioning and a description of the converter functions
  Phases of use: Control cabinet construction, commissioning, operation, maintenance and servicing.
- **Manuals**
  contain all the necessary information about the intended use of the components of a system, e.g. technical data, interfaces, dimension drawings, characteristics and possible applications.
  Phases of use: Cabinet configuration/setup, circuit diagram configuration/drawing.
- **Configuration Manuals**
  contain all the information needed for EMC-compliant installation and for the configuration of control cabinets and drive systems.
  Phases of use: Control cabinet configuration/setup.
- **List Manuals**
  describe all parameters, function diagrams and faults/alarms for the product/system as well as their meaning and setting options. It contains parameter data and fault/warning descriptions with functional correlations.
  Phases of use: Commissioning of components that have already been connected, configuration of system functions, fault cause/diagnostics.
- **Function Manuals**
  contain all the relevant information about individual drive functions
  Phases of use: Commissioning of components that have already been connected, configuration of system functions.

© Siemens 2024

Notes

© Siemens 2024

11/2 Certificates of suitability (approvals)
11/4 Software licenses
11/6 Conversion tables
11/8 Conditions of sale and delivery

© Siemens 2024

Certificates of suitability (approvals)

Overview

Many of the products in this Catalog fulfill requirements, e.g. for UL, CSA or FM and are labeled with the corresponding approval designation.

All of the certificates of suitability, approvals, certificates, declarations of conformity, test certificates, e.g. CE, UL, Safety Integrated etc. have been performed with the associated system components as they are described in the Catalogs and Configuration Manuals.

The certificates are only valid if the products are used with the described system components, are installed according to the Installation Guidelines and used for their intended purpose.

In other cases, the vendor of these products is responsible for arranging for the issue of new certificates.

Test code	Tested by	Device series/ Component	Test standard	Product category/ File-No.
UL: Underwriters Laboratories Independent public testing body in North America				
	UL according to UL standard	SINUMERIK	Standard UL 508, CSA C22.2 No. 142	NRAQ/7.E164110 NRAQ/7.E217227
		SIMOTION	Standard UL 508, CSA C22.2 No. 142	NRAQ/7.E164110
	UL according to CSA standard UL according to UL and CSA standards	SINAMICS	Standard UL 508, 508C, 61800-5-1 CSA C22.2 No. 142, 274	NRAQ/7.E164110, NMMS/2/7/8.E192450, NMMS/2/7/8.E203250, NMMS/7.E214113, NMMS/7.E253831 NMMS/2/7/8.E121068 NMMS/7.E355661 NMMS/7.E323473
	UL according to UL standard	SIMODRIVE	Standard UL 508C, CSA C22.2 No. 274	NMMS/2/7/8.E192450 NMMS/7.E214113
	UL according to CSA standard UL according to UL and CSA standards	SIMOTICS	Standard UL 1004-1, 1004-6, 1004-8, CSA C22.2 No. 100	PRGY2/8.E227215 PRHZ2/8.E93429 PRHJ2/8.E342747 PRGY2/8.E253922 PRHZ2/8.E342746
		Line/motor reactors	Standard UL 508, 506, 5085-1, 5085-2, 1561, CSA C22.2 No. 14, 47, 66.1-06, 66.2-06	XQNX2/8.E257859 NMTR2/8.E219022 NMMS2/8.E333628 XPTQ2/8.E257852 XPTQ2/8.E103521 NMMS2/8.E224872 XPTQ2/8.E354316 XPTQ2/8.E198309 XQNX2/8.E475972
		Line filters, dv/dt filters, sine-wave filters	UL 1283, CSA C22.2 No. 8	FOKY2/8.E70122
		Resistors	UL 508, 508C, CSA C22.2 No. 14, 274	NMTR2/8.E224314 NMMS2/8.E192450 NMTR2/8.E221095 NMTR2/8.E226619
TUV: TUV Rheinland of North America Inc. Independent public testing body in North America, Nationally Recognized Testing Laboratory (NRTL) TÜV: TÜV SÜD Product Service Independent public testing body in Germany, Nationally Recognized Testing Laboratory (NRTL) for North America				
	TUV according to UL and CSA standards	SINAMICS	NRTL listing according to standard UL 508C	U7V 12 06 20078 013 U7 11 04 20078 009 U7 11 04 20078 010 U7 11 04 20078 011
		SIMOTION	NRTL listing according to standard UL 508	U7V 13 03 20078 01
		SIMODRIVE	NRTL listing according to standard UL 508C, CSA C22.2. No. 14	CU 72090702
		Motion Control Encoder	NRTL listing according to UL 61010-1 CSA C22.2 No. 61010-1	U8V 10 06 20196 024

© Siemens 2024

Overview

Test code	Tested by	Device series/ Component	Test standard	Product category/ File-No.
CSA: Canadian Standards Association Independent public testing body in Canada				
	CSA according to CSA standard	SINUMERIK	Standard CSA C22.2 No. 142	2252-01 : LR 102527
FMRC: Factory Mutual Research Corporation Independent public testing body in North America				
	FM according to FM standard	SINUMERIK	Standard FMRC 3600, FMRC 3611, FMRC 3810, ANSI/ISA S82.02.1	–
EAC: Independent public testing body within the Eurasian Conformity Area				
	EAC in accordance with the EAC Directive	SINAMICS SINUMERIK SIMOTION	Standard IEC 61800-5-1/-2, IEC 61800-3	–
RCM: Australian Communications and Media Authority Independent public testing body in Australia				
	RCM according to EMC standard	SINAMICS SINUMERIK SIMOTION	Standard IEC AS 61800-3, EN 61800-3	–
KC: National Radio Research Agency Independent public testing body in South Korea				
	KC according to EMC standard	SINAMICS SINUMERIK SIMOTION	Standard KN 11	–
BIA Federal Institute for Occupational Safety				
–	Functional safety	SINAMICS SINUMERIK SIMOTION	Standard EN 61800-5-2	–
TÜV SÜD Rail				
–	Functional safety	SINAMICS SINUMERIK SIMOTION	Standard EN 61800-5-2	–

More information about certificates can be found online at:
https://support.industry.siemens.com/cs/ww/en/ps/cert

© Siemens 2024

Software licenses

Overview

Software types

Software requiring a license is categorized into types.
The following software types have been defined:

- Engineering software
- Runtime software

Engineering software

This includes all software products for creating (engineering) user software, e.g. for configuring, programming, parameterizing, testing, commissioning or servicing.

Data generated with engineering software and executable programs can be duplicated for your own use or for use by third-parties free-of-charge.

Runtime software

This includes all software products required for plant/machine operation, e.g. operating system, basic system, system expansions, drivers, etc.

The duplication of the runtime software and executable programs created with the runtime software for your own use or for use by third-parties is subject to a charge.

You can find information about license fees according to use in the ordering data (e.g. in the catalog). Examples of categories of use include per CPU, per installation, per channel, per instance, per axis, per control loop, per variable, etc.

Information about extended rights of use for parameterization/configuration tools supplied as integral components of the scope of supply can be found in the readme file supplied with the relevant product(s).

License types

Siemens Digital Industries and Smart Infrastructure offers various types of software license:

- Floating license
- Single license
- Rental license
- Rental floating license
- Trial license
- Demo license
- Demo floating license

Floating license

The software may be installed for internal use on any number of devices by the licensee. Only the concurrent user is licensed. The concurrent user is the person using the program. Use begins when the software is started.
A license is required for each concurrent user.

Single license

Unlike the floating license, a single license permits only one installation of the software per license.

The type of use licensed is specified in the ordering data and in the Certificate of License (CoL). Types of use include for example per instance, per axis, per channel, etc.

One single license is required for each type of use defined.

Rental license

A rental license supports the "sporadic use" of engineering software. Once the license key has been installed, the software can be used for a specific period of time (the operating hours do not have to be consecutive).
One license is required for each installation of the software.

Rental floating license

The rental floating license corresponds to the rental license, except that a license is not required for each installation of the software. Rather, one license is required per object (for example, user or device).

Trial license

A trial license supports "short-term use" of the software in a non-productive context, e.g. for testing and evaluation purposes.
It can be transferred to another license.

Demo license

The demo license support the "sporadic use" of engineering software in a non-productive context, for example, use for testing and evaluation purposes. It can be transferred to another license. After the installation of the license key, the software can be operated for a specific period of time, whereby usage can be interrupted as often as required.

One license is required per installation of the software.

Demo floating license

The demo floating license corresponds to the demo license, except that a license is not required for each installation of the software. Rather, one license is required per object (for example, user or device).

Certificate of License (CoL)

The CoL is the licensee's proof that the use of the software has been licensed by Siemens. A CoL is required for every type of use and must be kept in a safe place.

Downgrading

The licensee is permitted to use the software or an earlier version/release of the software, provided that the licensee owns such a version/release and its use is technically feasible.

Delivery versions

Software is constantly being updated.
The following delivery versions

- PowerPack
- Upgrade

can be used to access updates.

Existing bug fixes are supplied with the ServicePack version.

PowerPack

PowerPacks can be used to upgrade to more powerful software. The licensee receives a new license agreement and CoL (Certificate of License) with the PowerPack. This CoL, together with the CoL for the original product, proves that the new software is licensed.
A separate PowerPack must be purchased for each original license of the software to be replaced.

Upgrade

An upgrade permits the use of a new version of the software on the condition that a license for a previous version of the product is already held.
The licensee receives a new license agreement and CoL with the upgrade. This CoL, together with the CoL for the previous product, proves that the new version is licensed.
A separate upgrade must be purchased for each original license of the software to be upgraded.

© Siemens 2024

Overview

ServicePack

ServicePacks are used to debug existing products.
ServicePacks may be duplicated for use as prescribed according to the number of existing original licenses.

License key

Siemens Digital Industries and Smart Infrastructure supplies software products with and without license keys.

The license key serves as an electronic license stamp and is also the "switch" for activating the software (floating license, rental license, etc.).

The complete installation of software products requiring license keys includes the program to be licensed (the software) and the license key (which represents the license).

Software Update Service (SUS)

As part of the SUS contract, all software updates for the respective product are made available to you free of charge for a period of one year from the invoice date. The contract will automatically be extended for one year if it is not canceled three months before it expires.

The possession of the current version of the respective software is a basic condition for entering into an SUS contract.

You can download explanations concerning license conditions from
https://mall.industry.siemens.com/legal/ww/en/terms_of_trade_en.pdf

© Siemens 2024

Conversion tables

Rotary inertia (to convert from A to B, multiply by entry in table)

A \ B	lb-in^2	lb-ft^2	lb-in-s^2	lb-ft-s^2 slug-ft^2	kg-cm^2	kg-cm-s^2	gm-cm^2	gm-cm-s^2	oz-in^2	oz-in-s^2
lb-in^2	1	6.94×10^{-3}	2.59×10^{-3}	2.15×10^{-4}	2.926	2.98×10^{-3}	2.92×10^{3}	2.984	16	4.14×10^{-2}
lb-ft^2	144	1	0.3729	3.10×10^{-2}	421.40	0.4297	4.21×10^{5}	429.71	2304	5.967
lb-in-s^2	386.08	2.681	1	8.33×10^{-2}	1.129×10^{3}	1.152	1.129×10^{6}	1.152×10^{3}	6.177×10^{3}	16
lb-ft-s^2 slug-ft^2	4.63×10^{3}	32.17	12	1	1.35×10^{4}	13.825	1.355×10^{7}	1.38×10^{4}	7.41×10^{4}	192
kg-cm^2	0.3417	2.37×10^{-3}	8.85×10^{-4}	7.37×10^{-5}	1	1.019×10^{-3}	1000	1.019	5.46	1.41×10^{-2}
kg-cm-s^2	335.1	2.327	0.8679	7.23×10^{-2}	980.66	1	9.8×10^{5}	1000	5.36×10^{3}	13.887
gm-cm^2	3.417×10^{-4}	2.37×10^{-6}	8.85×10^{-7}	7.37×10^{-8}	1×10^{-3}	1.01×10^{-6}	1	1.01×10^{-3}	5.46×10^{-3}	1.41×10^{-5}
gm-cm-s^2	0.335	2.32×10^{-3}	8.67×10^{-4}	7.23×10^{-5}	0.9806	1×10^{-3}	980.6	1	5.36	1.38×10^{-2}
oz-in^2	0.0625	4.34×10^{-4}	1.61×10^{-4}	1.34×10^{-5}	0.182	1.86×10^{-4}	182.9	0.186	1	2.59×10^{-3}
oz-in-s^2	24.13	0.1675	6.25×10^{-2}	5.20×10^{-3}	70.615	7.20×10^{-2}	7.09×10^{4}	72.0	386.08	1

Torque (to convert from A to B, multiply by entry in table)

A \ B	lb-in	lb-ft	oz-in	N-m	kg-cm	kg-m	gm-cm	dyne-cm
lb-in	1	8.333×10^{-2}	16	0.113	1.152	1.152×10^{-2}	1.152×10^{3}	1.129×10^{6}
lb-ft	12	1	192	1.355	13.825	0.138	1.382×10^{4}	1.355×10^{7}
oz-in	6.25×10^{-2}	5.208×10^{-3}	1	7.061×10^{-3}	7.200×10^{-2}	7.200×10^{-4}	72.007	7.061×10^{4}
N-m	8.850	0.737	141.612	1	10.197	0.102	1.019×10^{4}	1×10^{7}
kg-cm	0.8679	7.233×10^{-2}	13.877	9.806×10^{-2}	1	10^{-2}	1000	9.806×10^{5}
kg-m	86.796	7.233	1.388×10^{3}	9.806	100	1	1×10^{5}	9.806×10^{7}
gm-cm	8.679×10^{-4}	7.233×10^{-5}	1.388×10^{-2}	9.806×10^{-5}	1×10^{-3}	1×10^{-5}	1	980.665
dyne-cm	8.850×10^{-7}	7.375×10^{-8}	1.416×10^{-5}	10^{-7}	1.0197×10^{-6}	1.019×10^{-8}	1.019×10^{-3}	1

Length (to convert from A to B, multiply by entry in table)

A \ B	inches	feet	cm	yd	mm	m
inches	1	0.0833	2.54	0.028	25.4	0.0254
feet	12	1	30.48	0.333	304.8	0.3048
cm	0.3937	0.03281	1	1.09×10^{-2}	10	0.01
yd	36	3	91.44	1	914.4	0.914
mm	0.03937	0.00328	0.1	1.09×10^{-3}	1	0.001
m	39.37	3.281	100	1.09	1000	1

Power (to convert from A to B, multiply by entry in table)

A \ B	hp	Watts
hp (English)	1	745.7
(lb-in) (deg./s)	2.645×10^{-6}	1.972×10^{-3}
(lb-in) (r/min)	1.587×10^{-5}	1.183×10^{-2}
(lb-ft) (deg./s)	3.173×10^{-5}	2.366×10^{-2}
(lb-ft) (r/min)	1.904×10^{-4}	0.1420
Watts	1.341×10^{-3}	1

Force (to convert from A to B, multiply by entry in table)

A \ B	lb	oz	gm	dyne	N
lb	1	16	453.6	4.448×10^{5}	4.4482
oz	0.0625	1	28.35	2.780×10^{4}	0.27801
gm	2.205×10^{-3}	0.03527	1	1.02×10^{-3}	N.A.
dyne	2.248×10^{-6}	3.59×10^{-5}	980.7	1	0.00001
N	0.22481	3.5967	N.A.	100000	1

Mass (to convert from A to B, multiply by entry in table)

A \ B	lb	oz	gm	kg	slug
lb	1	16	453.6	0.4536	0.0311
oz	6.25×10^{-2}	1	28.35	0.02835	1.93×10^{-3}
gm	2.205×10^{-3}	3.527×10^{-2}	1	10^{-3}	6.852×10^{-5}
kg	2.205	35.27	10^{3}	1	6.852×10^{-2}
slug	32.17	514.8	1.459×10^{4}	14.59	1

Rotation (to convert from A to B, multiply by entry in table)

A \ B	r/min	rad/s	degrees/s
r/min	1	0.105	6.0
rad/s	9.55	1	57.30
degrees/s	0.167	1.745×10^{-2}	1

© Siemens 2024

Temperature Conversion

°F	°C	°C	°F
0	–17.8	–10	14
32	0	0	32
50	10	10	50
70	21.1	20	68
90	32.2	30	86
98.4	37	37	98.4
212	100	100	212
subtract 32 and multiply by $^5/_9$		multiply by $^9/_5$ and add 32	

Mechanism Efficiencies

Acme-screw with brass nut	~0.35–0.65
Acme-screw with plastic nut	~0.50–0.85
Ball-screw	~0.85–0.95
Chain and sprocket	~0.95–0.98
Preloaded ball-screw	~0.75–0.85
Spur or bevel-gears	~0.90
Timing belts	~0.96–0.98
Worm gears	~0.45–0.85
Helical gear (1 reduction)	~0.92

Friction Coefficients

Materials	μ
Steel on steel (greased)	~0.15
Plastic on steel	~0.15–0.25
Copper on steel	~0.30
Brass on steel	~0.35
Aluminum on steel	~0.45
Steel on steel	~0.58

Mechanism	μ
Ball bushings	<0.001
Linear bearings	<0.001
Dove-tail slides	~0.2++
Gibb ways	~0.5++

Material Densities

Material	lb-in^3	gm-cm^3
Aluminum	0.096	2.66
Brass	0.299	8.30
Bronze	0.295	8.17
Copper	0.322	8.91
Hard wood	0.029	0.80
Soft wood	0.018	0.48
Plastic	0.040	1.11
Glass	0.079–0.090	2.2–2.5
Titanium	0.163	4.51
Paper	0.025–0.043	0.7–1.2
Polyvinyl chloride	0.047–0.050	1.3–1.4
Rubber	0.033–0.036	0.92–0.99
Silicone rubber, without filler	0.043	1.2
Cast iron, gray	0.274	7.6
Steel	0.280	7.75

Wire Gauges[1)]

Cross-section mm^2	Standard Wire Gauge (SWG)	American Wire Gauge (AWG)
0.2	25	24
0.3	23	22
0.5	21	20
0.75	20	19
1.0	19	18
1.5	17	16
2.5	15	13
4	13	11
6	12	9
10	9	7
16	7	6
25	5	3
35	3	2
50	0	1/0
70	000	2/0
95	00000	3/0
120	0000000	4/0
150	–	6/0
185	–	7/0

1) The table shows approximate SWG/AWG sizes nearest to standard metric sizes; the cross-sections do not match exactly.

© Siemens 2024

Conditions of sale and delivery

1. General Provisions

By using this catalog you can purchase hard- and software products as well as services (together hereinafter referred to as "products") described therein from Siemens Aktiengesellschaft subject to the following Terms and Conditions of Sale and Delivery (hereinafter referred to as "T&C"). Note, for products purchased from any Siemens entity having a registered office outside of Germany, the respective terms and conditions of sale and delivery of the respective Siemens entity apply exclusively. The following T&C apply exclusively for orders placed with Siemens Aktiengesellschaft, Germany.

1.1 For customers with a seat or registered office in European Union

For customers with a seat or registered office in European Union, the following terms and conditions apply subordinate to T&C:

- for products, which include specific terms and conditions in the text of the product description, these specific terms and conditions shall apply and subordinate thereto,,
- for stand-alone software products and software products forming a part of a product or project, the "General Conditions for Software Products for Infrastructure & Industry Business (German law)"[1)] and/or
- for consulting services the "Allgemeine Geschäftsbedingungen für Beratungsleistungen für Infrastructure & Industry Geschäft (Deutsches Recht)"[1)] (available only in German) and/or
- for other services, the „Supplementary Terms and Conditions for Services for Infrastructure & Industry Business (German Law) ("BL")"[1)] and/or
- for other products the "General Conditions for the Supply of Products and Services of the Electrical and Electronics Industry"[1)].
  In case such products should contain Open Source Software, the conditions of which shall prevail over the "General Conditions for the Supply of Products and Services of the Electrical and Electronics Industry"[1)], the Product will be given a note as to which special conditions apply to this open source software. This shall apply mutatis mutandis for notices referring to other third-party software components.

1.2 For customers with a seat or registered office outside European Union

For customers with a seat or registered office outside European Union, the following terms and conditions apply subordinate to T&C:

- for products, which include specific terms and conditions in the description text, these specific terms and conditions shall apply and subordinate thereto,
- for consulting services the "Standard Terms and Conditions for Consulting Services for Infrastructure & Industry Business (Swiss Law)"[1)] and/or
- for other services the "International Terms & Conditions for Services"[1)] supplemented by "Software Licensing Conditions"[1)] and/or
- for other products the "International Terms & Conditions for Products"[1)] supplemented by "Software Licensing Conditions"[1)]

1.3 For customers with master or framework agreement

To the extent products offered are covered by an existing master or framework agreement, the terms and conditions of that agreement shall apply instead of T&C.

2. Prices

The prices are in € (Euro) ex point of delivery, exclusive of packaging.

The sales tax (value added tax) is not included in the prices. It shall be charged separately at the respective rate according to the applicable statutory legal regulations.

Prices are subject to change without prior notice. We will charge the prices valid at the time of delivery.

To compensate for variations in the price of raw materials (e.g. silver, copper, aluminum, lead, gold, dysprosium and neodym), surcharges are calculated on a daily basis using the so-called metal factor for products containing these raw materials.
A surcharge for the respective raw material is calculated as a supplement to the price of a product if the basic official price of the raw material in question is exceeded.

The metal factor of a product indicates the basic official price (for those raw materials concerned) as of which the surcharges on the price of the product are applied, and with what method of calculation. The metal factor, provided it is relevant, can be found in the respective product description.

An exact explanation of the metal factor can be downloaded at:

https://mall.industry.siemens.com/legal/ww/en/terms_of_trade_en.pdf

To calculate the surcharge (except in the cases of copper, dysprosium and neodym), the official price from the day prior to that on which the order was received or the release order was effected is used.

To calculate the surcharge applicable to copper, the official price from two days prior to that on which the order was received or the release order was effected is used.

To calculate the surcharge applicable to dysprosium and neodym ("rare earths"), the corresponding three-month basic average price in the quarter prior to that in which the order was received or the release order was effected is used with a one-month buffer (details on the calculation can be found in the explanation of the metal factor).

3. Additional Terms and Conditions

The dimensions are in mm. In Germany, according to the German law on units in measuring technology, data in inches apply only to devices for export.

Illustrations are not binding.

Insofar as there are no remarks on the individual pages of this catalog – especially with regard to data, dimensions and weights given – these are subject to change without prior notice.

[1)] The text of the Terms and Conditions of Siemens AG can be downloaded at
https://mall.industry.siemens.com/legal/ww/en/terms_of_trade_en.pdf

© Siemens 2024

4. Export Control and Sanctions Compliance

4.1 General

Customer shall comply with all applicable sanctions, embargoes and (re-)export control laws and regulations, and, in any event, with those of the European Union, the United States of America and any locally applicable jurisdiction (collectively “Export Regulations”).

4.2 Checks for Products

Prior to any transaction by customer concerning products (including hardware, documentation and technology) delivered by Siemens, or products (including maintenance and technical support) performed by Siemens with a third party, customer shall check and certify by appropriate measures that

- (i) the customer’s use, transfer, or distribution of such products, the brokering of contracts or the provision of other economic resources in connection with products will not be in violation of any Export Regulations, also taking into account any prohibitions to circumvent these (e.g., by undue diversion)
- (ii) the products are not intended or provided for prohibited or unauthorized non-civilian purposes (e.g. armaments, nuclear technology, weapons, or any other usage in the field of defense and military);
- (iii) customer has screened all direct and indirect parties involved in the receipt, use, transfer, or distribution of the products against all applicable restricted party lists of the Export Regulations concerning trading with entities, persons and organizations listed therein and
- (iv) products within the scope of items-related restrictions, as specified in the respective annexes to the Export Regulations, will not, unless permitted by the Export Regulations, be
  (a) exported, directly or indirectly (e.g., via Eurasian Economic Union (EAEU) countries), to Russia or Belarus, or
  (b) resold to any third party business partner that does not take a prior commitment not to export such products to Russia or Belarus.

4.3 Non-Acceptable Use of Software and Cloud Services

Customer shall not, unless permitted by the Export Regulations or respective governmental licenses or approvals,

(i) download, install, access or use the products from or in any location prohibited by or subject to comprehensive sanctions or subject or to license requirements according to the Export Regulations;
(ii) grant access to, transfer, (re-)export (including any "deemed (re-)exports"), or otherwise make available the products to any entity, person, or organization identified on a restricted party list of the Export Regulations;
(iii) use the products for any purpose prohibited by the Export Regulations (e.g. use in connection with armaments, nuclear technology or weapons);
(iv) upload to a products platform any customer content unless it is non-controlled (e.g. in the EU: AL = N;
in the U.S.: ECCN = N or EAR99);
(v) facilitate any of the afore mentioned activities by any user. Customer shall provide all users with all information necessary to ensure compliance with the Export Regulations.

4.4 Semiconductor Development

Customer will not, without advance written authorization from Siemens, use offerings for the development or production of integrated circuits at any semiconductor fabrication facility located in China meeting the criteria specified in the U.S. Export Administration Regulations, 15 C.F.R. 744.23.

4.5 Information

Upon request by Siemens, customer shall promptly provide Siemens with all information pertaining to users, the intended use and the location of use or the final destination (in the case of hardware, documentation and technology) of the products. Customer will notify Siemens prior to customer disclosing any information to Siemens that is defense-related or requires controlled or special data handling pursuant to applicable government regulations, and will use the disclosure tools and methods specified by Siemens.

4.6 Reservation

Siemens shall not be obligated to fulfill this agreement if such fulfillment is prevented by any impediments arising out of national or international foreign trade or customs requirements or any embargoes or other sanctions. Customer acknowledges that Siemens may be obliged under the Export Regulations to limit or suspend access by customer and/or users to products.

5. Miscellaneous

Errors excepted and subject to change without prior notice.

© Siemens 2024

Notes

© Siemens 2024

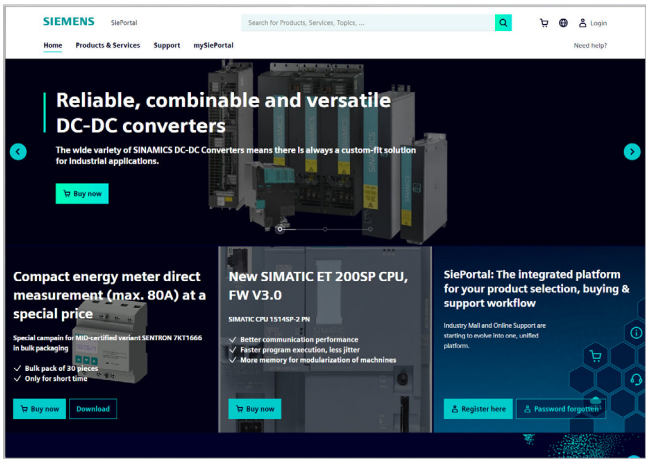

Easy product selection and ordering with SiePortal

SiePortal > Products & Services

The internet ordering platform of Siemens AG is located in SiePortal. It provides you with online access to a comprehensive product spectrum that is presented in an informative, well-organized way.

Powerful search functions help you select the required products, while configurators enable you to configure complex product and system components quickly and easily. CAx data are also available for you to use.

Data transfer allows the entire procedure, from selection through ordering to tracking and tracing, to be carried out online. Availability checks, individual customer discounting, and quotation preparation are also possible.

https://sieportal.siemens.com

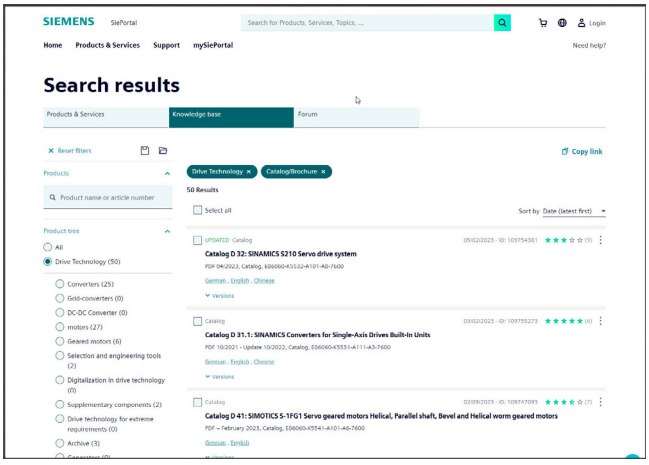

Downloading catalogs

SiePortal > Support > Knowledge base

You can download catalogs and brochures in PDF format from Siemens Industry Online Support without having to register.

The filter box makes it possible to perform targeted searches.

https://sieportal.siemens.com

© Siemens 2024

Get more information

SINAMICS S120
Chassis Format Converter Units
and Cabinet Modules
www.siemens.com/sinamics-s120

SINAMICS S150
Converter Cabinet Units
www.siemens.com/sinamics-s150

The SINAMICS converter family:
www.siemens.com/sinamics

Motion Control Systems and Solutions for production machine and machine tool equipment:
www.siemens.com/motioncontrol

Local partners worldwide:
www.siemens.com/automation-contact

Published by
Siemens AG

Digital Industries
Motion Control
Postfach 31 80
91050 Erlangen, Germany

For the U.S. published by
Siemens Industry Inc.

100 Technology Drive
Alpharetta, GA 30005
United States

PDF (E86060-K5521-A131-A9-7600)
V6.MKKATA.GMC.530
KG 0424 544 En
Produced in Germany
© Siemens 2024

Cybersecurity information

Siemens provides products and solutions with industrial cybersecurity functions that support the secure operation of plants, systems, machines and networks.

In order to protect plants, systems, machines and networks against cyber threats, it is necessary to implement – and continuously maintain – a holistic, state-of-the-art industrial cybersecurity concept. Siemens' products and solutions constitute one element of such a concept.

Customers are responsible for preventing unauthorized access to their plants, systems, machines and networks. Such systems, machines and components should only be connected to an enterprise network or the internet if and to the extent such a connection is necessary and only when appropriate security measures (e.g. firewalls and/or network segmentation) are in place.

For additional information on industrial cybersecurity measures that may be implemented, please visit
www.siemens.com/cybersecurity-industry

Siemens' products and solutions undergo continuous development to make them more secure. Siemens strongly recommends that product updates are applied as soon as they are available and that the latest product versions are used. Use of product versions that are no longer supported, and failure to apply the latest updates may increase customer's exposure to cyber threats.

To stay informed about product updates, subscribe to the Siemens Industrial Cybersecurity RSS Feed under
www.siemens.com/cert

Subject to changes and errors. The information given in this document only contains general descriptions and/or performance features which may not always specifically reflect those described, or which may undergo modification in the course of further development of the products. The requested performance features are binding only when they are expressly agreed upon in the concluded contract.

All product designations may be trademarks or product names of Siemens AG or other companies whose use by third parties for their own purposes could violate the rights of the owners.