Lists 10/2004 Edition

# sinumerik & simodrive

SINUMERIK 840D/810D/840Di
SIMODRIVE 611 digital

SIEMENS

Промэлектроника, sales@prom-elec.com

SIEMENS

# SINUMERIK 840D/840Di/810D
# SIMODRIVE 611 digital

## Lists


Overview of Functions 1

Lists of Machine and Setting Data 2

Variables 3

Interface Signals 4

PLC Blocks 5

Appendix: References A

Index I


**Valid for**

| *Controls* | *Software version* |
|---|---|
| SINUMERIK 840D powerline | 7 |
| SINUMERIK 840DE powerline (Export variant) | 7 |
| SINUMERIK 840Di | 3 |
| SINUMERIK 840DiE (Export variant) | 3 |
| SINUMERIK 810D powerline | 7 |
| SINUMERIK 810DE powerline (Export variant) | 7 |


**10.04 Edition**

# SINUMERIK®-Dokumentation

**Printing history**

Brief details of this edition and previous editions are listed below.

The status of each edition is shown by the code in the "Remarks" column.

*Status codes in the "Remarks" column.*

**A ....** New documentation.
**B ....** Unrevised reprint with new Order No.
**C ....** Revised edition with new status.
If factual changes have been made on a page since the last edition, this is indicated by a new edition coding in the header on that page.

| Edition | Order No. | Remarks |
|---|---|---|
| 09.95 | 6FC5 297-3AB70-0BP0 | **A** |
| 12.95 | 6FC5 297-3AB70-0BP1 | **C** |
| 03.96 | 6FC5 297-3AB70-0BP2 | **C** |
| 08.97 | 6FC5 297-4AB70-0BP0 | **C** |
| 12.97 | 6FC5 297-4AB70-0BP1 | **C** |
| 12.98 | 6FC5 297-5AB70-0BP0 | **C** |
| 08.99 | 6FC5 297-5AB70-0BP1 | **C** |
| 04.00 | 6FC5 297-5AB70-0BP2 | **C** |
| 10.00 | 6FC5 297-6AB70-0BP0 | **C** |
| 09.01 | 6FC5 297-6AB70-0BP1 | **C** |
| 03.04 | 6FC5 297-7AB70-0BP0 | **C** |
| 10.04 | 6FC5 297-7AB70-0BP1 | **C** |

## Trademarks

SIMATIC©, SIMATIC HMI©, SIMATIC NET©, SIROTEC©, SINUMERIK© and SIMODRIVE© are trademarks of SIEMENS. Other product names used in this documentation may be trademarks which, if used by third parties, could infringe the rights of their owners.

Further information is available on the Internet under:
http://www.ad.siemens.de/motioncontrol

Other functions not described in this documentation might be executable in the control. This does not, however, represent an obligation to supply such functions with a new control or when servicing.

We have checked that the contents of this document correspond to the hardware and software described. Nonetheless, differences might exist. The information contained in this document is, however, reviewed regularly and any necessary changes will be included in the next edition. We welcome suggestions for improvement.

© Siemens AG 2004. All Rights Reserved.

Subject to change without prior notice.

Order No. 6FC5 297-7AB70-0BP1
Printed in the Federal Republic of Germany

Siemens-Aktiengesellschaft.

# Preface

**Documentation structure**

The SINUMERIK documentation is organized in 3 parts:

- General documentation
- User documentation
- Manufacturer/Service documentation

Further information about SINUMERIK 840D/810D brochures and brochures that are valid for all SINUMERIK controls can be obtained from your local SIEMENS branch office.

**Target group**

This document is intended for the manufacturers of machine tools incorporating SINUMERIK 840D or SINUMERIK 810D and SIMODRIVE 611D systems.

**Hotline**

If you have any questions, please contact the following hotline:

A&D Technical Support Tel.: +49 (0) 180 5050 - 222

Fax: +49 (0) 180 5050 - 223

Internet: http://www.siemens.de/automation/support-request

If you have questions or comments regarding the documentation (suggestions, corrections), please send a fax to the following fax address and email.

Fax: +49 (0) 9131 98 -2176

email: motioncontrol.docu@erlf.siemens.de

Fax form: See the feedback form at the end of the brochure.

**SINUMERIK Internet address**

http://www.siemens.com/motioncontrol

**SINUMERIK 840D powerline**

Since 09.2001, the

- SINUMERIK 840D powerline and
- SINUMERIK 840DE powerline

with improved performance have been available. You can find a listing of available **powerline** modules in the following hardware description:

**References:** /PHD/ , SINUMERIK 840D Configuration Manual

**SINUMERIK 810D powerline**

Since 12.2001, the

© Siemens AG 2004 All Rights Reserved

- SINUMERIK 810D powerline and
- SINUMERIK 810DE powerline

with improved performance have been available. You can find a listing of available **powerline** modules in the following hardware description:

**Literature:** /PHC/ , SINUMERIK 810D Configuration Manual

**Statement of software version**

The software versions stated in the documentation are valid for the SINUMERIK 840D and SINUMERIK 810D controls. The software versions are related to each other, see Table 0-1.

Table 0-1 Software version correspondences

| **SINUMERIK 840D** | | **SINUMERIK 810D** | **SINUMERIK 810D powerline** | **SINUMERIK 840Di** |
|---|---|---|---|---|
| 6.3 (09.01) | equals | - | 6.1 (12.01) | 2.1 (07.01) |
| 5.3 (04.00) | equals | 3.3 (04.00) | - | 1.1 (07.00) |
| 3.7 (03.97) | equals | 1.7 (03.97) | - | |

**For whom is the manual written?**

- Project engineers
- Electricians and fitters
- Service and operating personnel

**Subject-matter of the manual**

The 'Lists' manual provides you with a complete overview of the functions, machine data, variables, interface signals, PLC modules and available references. In the short statements regarding the machine data, you can usually find a reference to literature that contains detailed information.

**Search aids**

To help the reader, this guide offers not only a list of contents, but also the following appendices:

- References
- Index

© Siemens AG 2004 All Rights Reserved

**Danger and warning notes**

The following danger and warning notes are used in brochures.
Explanation of symbols:

**Danger**

This symbol appears whenever death, severe bodily injury or substantial material damage **will** occur if the appropriate precautions are not taken.

**Warning**

This symbol appears whenever death, severe bodily injury or substantial material damage **could** occur if the appropriate precautions are not taken.

**Caution**

This symbol (with warning triangle) means that minor bodily injury or material damage **can** occur if the appropriate precautions are not taken.

**Caution**

This warning (without warning triangle) means that material damage **can** occur if the appropriate precautions are not taken.

**Notice**

This warning means that an undesirable event or state **can** result if the corresponding notice is ignored.

© Siemens AG 2004 All Rights Reserved

**Important notes**

!

**Important**

This notice means that attention has to be paid to something of particular importance.

**Note**

This symbol appears in this documentation whenever background information is provided.

**Machine manufacturer**

The symbol displayed here appears in this documentation when the machine manufacturer can influence or change the described functional behavior. Observe the information from the machine manufacturer!

**Trademarks**

IBM® is a registered trademark of the International Business Corporation. MS-DOS® and WINDOWS™ are registered trademarks of the Microsoft Corporation.

■

© Siemens AG 2004 All Rights Reserved

# Contents

**1 Overview of Functions ..... 1-15**

1.1 SINUMERIK CNC Controls ..... 1-15

1.2 Positioning Modules ..... 1-67

**2 Machine and Setting Data ..... 2-75**

2.1 Explanatory notes on the machine and setting data ..... 2-76
2.1.1 General information ..... 2-76
2.1.2 Handling of machine data ..... 2-80

2.2 Drive machine data ..... 2-83

2.3 Machine data for hydraulics module ..... 2-154

2.4 Machine data for operator panel ..... 2-168

2.5 General machine data ..... 2-206
2.5.1 System settings ..... 2-207
2.5.2 System settings ..... 2-243
2.5.3 Central drive data ..... 2-249
2.5.4 Central drive data ..... 2-254

2.6 Channel-specific machine data ..... 2-271
2.6.1 Basic channel machine data ..... 2-272
2.6.2 Machine data for grinding function ..... 2-295
2.6.2 Channel auxiliary function settings ..... 2-298
2.6.3 Transformation definitions in channel ..... 2-307
2.6.4 Punching and nibbling ..... 2-325
2.6.5 Channel-specific memory settings ..... 2-329

2.7 Axis-specific machine data ..... 2-338
2.7.1 Configuration ..... 2-339
2.7.2 Encoder matching ..... 2-345
2.7.3 Closed-loop control ..... 2-347
2.7.4 Reference point approach ..... 2-358
2.7.5 Spindles ..... 2-361
2.7.6 Monitoring functions ..... 2-366
2.7.7 Safety Integrated ..... 2-370
2.7.8 Travel to fixed stop ..... 2-386
2.7.9 Axis-specific memory settings ..... 2-393

2.8 Setting data ..... 2-394
2.8.1 General setting data ..... 2-394
2.8.2 Channel-specific setting data ..... 2-398
2.8.3 Axis-specific setting data ..... 2-408

2.9 Machine data for ManualTurn, ShopMill, ShopTurn ..... 2-413

© Siemens AG 2004 All Rights Reserved

**3 Variables ..... 3-415**

3.1 Introduction ..... 3-418
3.1.2 Module types ..... 3-420
3.1.3 Variable types ..... 3-422
3.1.4 Data types ..... 3-424

3.2 System data ..... 3-426
3.2.1 Area N, Mod. Y: Global system data ..... 3-426
3.2.2 Area C, Mod. Y: Channel-specific system data ..... 3-435
3.2.3 Area N, Mod. PA: Global protection zones ..... 3-440
3.2.4 Area C, Mod. PA: Channel-specific protection zones ..... 3-447
3.2.5 Area N, Mod. YNCFL: NCK instruction groups ..... 3-454

3.3 State data of system ..... 3-455
3.3.1 Area N, Mod. S: Global state data ..... 3-455
3.3.2 Area N, Mod. SALA: Alarms: List organized according to time, oldest alarm appears first ..... 3-475
3.3.3 Area N, Mod. SALAP: Alarms: List organized according to priority ..... 3-477
3.3.4 Area N, Mod. SALAL: Alarms: Liste organized according to time, most recent alarm appears first ..... 3-479
3.3.5 Area N, Mod. SMA: State data: Machine axes ..... 3-481
3.3.6 Area N, Mod. SEMA: State data: Machine axes (extension of SMA) ..... 3-483
3.3.7 Area N, Mod. SSP: State data: Spindle ..... 3-505
3.3.8 Area N, Mod. SSP2: State data: Spindle ..... 3-508
3.3.9 Area N, Mod. FA: Active NCU global frames ..... 3-511
3.3.10 Area N, Mod. FB: NCU global base frames ..... 3-512
3.3.11 Area N, Mod. FU: NCU global settable frames ..... 3-513
3.3.12 Area N, Mod. YFAFL: NCK instruction groups (Fanuc) ..... 3-514
3.3.13 Area B, Mod. S: Mode-group-specific state data ..... 3-515

3.4 State data of channel ..... 3-516
3.4.1 Area C, Mod. M: Channel-specific machine data ..... 3-516
3.4.2 Area C, Mod. S: Channel-specific status data ..... 3-517
3.4.3 Area C, Mod. SINF: Part-program-specific status data ..... 3-548
3.4.4 Area C, Mod. SPARP: Part program information ..... 3-551
3.4.5 Area C, Mod. SPARPP: Program pointer in automatic operation ..... 3-556
3.4.6 Area C, Mod. SPARPI: Program pointer on interruption ..... 3-559
3.4.7 Area C, Mod. SPARPF: Program pointers for block search and stop run ..... 3-561
3.4.8 Area C, Mod. SSYNAC: Synchronous actions ..... 3-564
3.4.9 Area C, Mod. SYNACT: Channel-specific synchronous actions ..... 3-567
3.4.10 Area C, Mod. SNCF: Active G functions ..... 3-568
3.4.11 Area C, Mod. NIB: State data: Nibbling ..... 3-570
3.4.12 Area C, Mod. FB: Channel-specific base frames ..... 3-572
3.4.13 Area C, Mod. FS: Channel-specific system frames ..... 3-573
3.4.14 Area C, Mod. AUXFU: Auxiliary functions ..... 3-574

3.5 State data of axes ..... 3-575
3.5.1 Area C, Mod. SMA: State data: Machine axes ..... 3-575
3.5.2 Area C, Mod. SEMA: State data: Machine axes (extension of SMA) ..... 3-577
3.5.3 Area C, Mod. SGA: State data: Geometry axes in tool offset memory ..... 3-598
3.5.4 Area C, Mod. SEGA: State data: Geometry axes in tool offset memory (extension of SGA) ..... 3-601
3.5.5 Area C, Mod. SSP: State data: Spindle ..... 3-607

© Siemens AG 2004 All Rights Reserved

3.5.6 Area C, Mod. FU: Channel-specific settable frames ..... 3-611
3.5.7 Area C, Mod. SSP2: State data: Spindle ..... 3-613
3.5.8 Area C, Mod. FA: Active channel-specific frames ..... 3-617
3.5.9 Area C, Mod. FE: Channel-specific external frame ..... 3-618

3.6 State data of drives ..... 3-619
3.6.1 Area H, Mod. S: Drive-specific state data (MSD) ..... 3-619
3.6.2 Area V, Mod. S: Drive-specific status data (FDD) ..... 3-622

3.7 Tool and magazine data ..... 3-624
3.7.1 Area T, Mod. TO: Tool edge data: Offset data ..... 3-624
3.7.2 Area T, Mod. TD: Tool data: General data ..... 3-627
3.7.3 Area T, Mod. TS: Tool edge data: Monitoring data ..... 3-630
3.7.4 Area T, Mod. TU: Tool data: User-defined data ..... 3-632
3.7.5 Area T, Mod. TUE: Tool edge data: User-defined data ..... 3-633
3.7.6 Area T, Mod. TG: Tool data: Grinding-specific data ..... 3-634
3.7.7 Area T, Mod. TMC: Magazine data: Configuration data ..... 3-636
3.7.8 Area T, Mod. TMV: Magazine data: Directory ..... 3-638
3.7.9 Area T, Mod. TM: Magazine data: General data ..... 3-639
3.7.10 Area T, Mod. TP: Magazine data: Location data ..... 3-642
3.7.11 Area T, Mod. TPM: Magazine data: Multiple assignment of location data ..... 3-644
3.7.12 Area T, Mod. TT: Magazine data: Location types ..... 3-645
3.7.13 Area T, Mod. TV: Tool data: Directory ..... 3-646
3.7.14 Area T, Mod. TF: Parametrizing, return parameters of _N_TMGETT, _N_TSEARC ..... 3-648
3.7.15 Area T, Mod. TUM: Tool data: user magazine data ..... 3-656
3.7.16 Area T, Mod. TUP: Tool data: user magatine place data ..... 3-657
3.7.17 Area T, Mod. TUS: Tool data: user monitoring data ..... 3-658
3.7.18 Area T, Mod. AD: Adapter data ..... 3-659
3.7.19 Area T, Mod. AEV: Working offsets: Directory ..... 3-660
3.7.20 Area T, Mod. TC: Toolholder parameters ..... 3-663
3.7.21 Area T, Mod. TOE: Edge-related coarse total offsets, setup offsets ..... 3-670
3.7.22 Area T, Mod. TOET: Edge-related coarse total offsets, transformed setup offsets ..... 3-671
3.7.23 Area T, Mod. TOS: Edge-related location-dependent fine total offsets . 3-672
3.7.24 Area T, Mod. TOST: Edge-related location-dependent fine total offsets, transformed ..... 3-675
3.7.25 Area T, Mod. TOT: Edge data: Transformed offset data ..... 3-676
3.7.26 Area T, Mod. TAD: Application-specific data ..... 3-678
3.7.27 Area T, Mod. TAM: Application-specific magazine data ..... 3-679
3.7.28 Area T, Mod. TAO: Application-specific cutting edge data ..... 3-680
3.7.29 Area T, Mod. TAP: Application-specific magazine location data ..... 3-681
3.7.30 Area T, Mod. TAS: Application-specific monitoring data ..... 3-682

3.8 Machine and setting data ..... 3-683
3.8.1 Area N, Mod. M: Global machine data ..... 3-683
3.8.2 Area A, Mod. M: Axis-specific machine data ..... 3-685
3.8.3 Area N, Mod. SE: Global setting data ..... 3-686
3.8.4 Area C, Mod. SE: Channel-specific setting data ..... 3-687
3.8.5 Area A, Mod. SE: Axis-specific setting data ..... 3-688

3.9 Parameters ..... 3-690
3.9.1 Area C, Mod. RP: Arithmetic parameters ..... 3-690

© Siemens AG 2004 All Rights Reserved

3.9.2 Area C, Mod. VSYN: Channel-specific user variables for synchronous actions ... 3-691

3.10 Servo ... 3-692
3.10.1 Area N, Mod. SD: Servo data ... 3-692

3.11 Diagnosis data ... 3-694
3.11.1 Area N, Mod. DIAGN: Global diagnostic data ... 3-694
3.11.2 Area C, Mod. DIAGN: Channel-specific diagnosis data ... 3-707
3.11.3 Area N, Mod. ETPD: Data lists for protocolling ... 3-710
3.11.4 Area C, Mod. ETP: Types of events ... 3-711

3.12 MMC/HMI State data ... 3-716
3.12.1 Area M, Mod. S: Internal status data MMC ... 3-716

**4 Interface Signals ... 4-717**

4.1 Data modules (DB) of the PLC application interface ... 4-718

4.2 Interface signals of the PLC application interface ... 4-719
4.2.1 Signals from/to machine control panel, M version ... 4-720
4.2.2 Signals from/to machine control panel, T version ... 4-722
4.2.3 Signals from/to slimline machine control panel ... 4-723
4.2.4 Signals from/to handheld unit (HHU) ... 4-724
4.2.5 Signals from/to handheld programming unit (HPU) ... 4-726
4.2.6 PLC messages (DB 2) ... 4-727
4.2.7 Signals to NC (DB 10) ... 4-731
4.2.8 Signals from/to NCK/MMC (DB 10) ... 4-736
4.2.9 Signals from/to mode group (DB 11) ... 4-742
4.2.10 Signals for Safety SPL (safe programmable logic) (DB 18) ... 4-744
4.2.11 Signals from/to operator panel (DB 19) ... 4-748
4.2.12 PLC machine data (DB 20) ... 4-753
4.2.13 Signals from/to NCK channel (DB 21–30) ... 4-754
4.2.14 Signals from/to axis/spindle (PLC→NCK) (DB 31–DB 61) ... 4-772
4.2.15 Interface for loading/unloading magazine (DB 71) ... 4-780
4.2.16 Interface for spindle as change position (DB 72) ... 4-781
4.2.17 Interface for circular magazine (DB 73) ... 4-783
4.2.18 Signals to and from the machine control panel and HHU (840Di with MCI2 only) (DB 77) ... 4-784
4.2.19 Signals to/from ManualTurn, ShopMill, ShopTurn (DB 82) ... 4-785

**5 PLC-Blocks ... 5-787**

5.1 Overview of organization blocks ... 5-788

5.2 Overview of function blocks ... 5-789

5.3 Assignment of data blocks ... 5-791

5.4 Assigned timers ... 5-792

© Siemens AG 2004 All Rights Reserved

**A Appendix ..... A-793**

**I Index ..... I-805**

I.1 Index ..... I-805

© Siemens AG 2004 All Rights Reserved

## Notes

© Siemens AG 2004 All Rights Reserved

# 1 Overview of functions

**1/16** **SINUMERIK CNC controls**

In the function overview, the main functions of SINUMERIK 802S base line, SINUMERIK 802C base line, SINUMERIK 802D base line, SINUMERIK 802D, SINUMERIK 810D powerline, SINUMERIK 840Di and SINUMERIK 840D powerline are listed, allowing you quick and selective access to individual functions.

The designation "E" in the name of the control indicates that it is the export variant, i. e. the control can be exported with the functions specified in the table.

When complete order numbers are given in the list, they must be specified in the order with the relevant quantity. The order numbers for the hardware components and other options must be obtained from the relevant Sections.

1/66 Overview of the options for SINUMERIK 810D powerline/840Di/840D powerline

**1/67** **Positioning modules**

In the function overview, the main functions of FM 353, FM 354, FM 357-2L/LX/H and SIMODRIVE 611 universal HR are listed. This allows you to find individual functions quickly and easily. For FM 353/FM 354, the functions for use as a stand-alone PLC auxiliary axis are listed.

**1/73** **Export and standard control versions**


Note:
For further details about the "restricted functionality" for the export variants, see the glossary on the enclosed CD-ROM for Catalog NC 60 or the Internet at: www.siemens.com/automation/mall

1

● Basic version
○ Option
◇ Function is dependent on operating software
– Not possible

| | Order No. |
|---|---|
| **Control structure/application** | |
| Structure | |
| • SIMODRIVE 611 | See Converters |
| • SINUMERIK PCU | See Operator Components |
| Drives | See Converters |
| • SIMODRIVE 611 digital | |
| • SIMODRIVE 611 universal HR [1] | |
| • SIMODRIVE 611 universal E HR (via PROFIBUS) | |
| • SIMODRIVE POSMO A/SI/CD/CA | |
| • SIMODRIVE base line | |
| • FM STEPDRIVE (stepper motors) | |
| Mode groups (MGs) | |
| • 1 MG | |
| • Maximum configuration | |
| NCU 561.4/NCU 571.4 | |
| NCU 572.4 | |
| NCU 573.4/NCU 573.5 | |
| • Each additional MG | **6FC5 251-0AD00-0AA0** |
| Machining channels | |
| • Maximum configuration | |
| NCU 561.4/NCU 571.4 | |
| NCU 572.4 | |
| NCU 573.4/NCU 573.5 | |
| • Each additional machining channel | **6FC5 251-0AA07-0AA0** |
| Additional axis/spindle + channel | |
| NCU 561.4 | **6FC5 251-0AD08-0AA0** |
| NCU 571.4/NCU 572.4/NCU 573.4/NCU 573.5 | |

1) Activation via analog or PROFIBUS interface.
2) For positioning tasks using the PLC.
3) In excess of ±10 V, not PROFIBUS.
4) With system software Plus (requirements: PCU with 1.2 GHz). With system software Basic and Universal: 2.
5) With NCU system software 2/6/12 axes: max. 2 MGs/2 channels.

| SINUMERIK 802 | | | | SINUMERIK 810D powerline/840Di/840D powerline | | | | | | | | | | | | |
|---|---|---|---|---|---|---|---|---|---|---|---|---|---|---|---|---|
| 802S base line | 802C base line | 802D base line | 802D | 810DE power-line | 810D power-line | 840DiE | 840Di | 840DE power-line | 840D power-line | Note on operating software<br>Blank field: Function is not dependent on operating software<br>HMI Ad-van-ced | HMI Em-bed-ded | Shop Mill | Manual Turn | Shop Turn | HT 6 |
| – | – | – | – | ● | ● | – | – | ● | ● | | | | | | |
| ● | ● | ● | ● | – | – | ● | ● | – | – | | | | | | |
| – | – | – | – | ● | ● | – | – | ● | ● | | | | | | |
| – | ● | – | – | ○ 2) | ○ 2) | ● | ● | ○ 2) | ○ 2) | | | | | | |
| – | ● 3) | ● | ● | ○ 2) | ○ 2) | ● | ● | ○ 2) | ○ 2) | | | | | | |
| – | – | – | – | ○ 2) | ○ 2) | ● | ● | ○ 2) | ○ 2) | | | | | | |
| – | ● | – | – | – | – | – | – | – | – | | | | | | |
| ● | – | – | – | – | – | – | – | – | – | | | | | | |
| ● | ● | ● | ● | ● | ● | ● | ● | ● | ● | | | | | | |
| 1 | 1 | 1 | 1 | 2 | 2 | 6 4) | 6 4) | | | 10 | 10 | 1 | 1 | 1 | 10 |
| | | | | | | | | 2 | 2 | | | | | | |
| | | | | | | | | 6 5) | 6 5) | | | | | | |
| | | | | | | | | 10 5) | 10 5) | | | | | | |
| – | – | – | – | ○ | ○ | ○ | ○ | ○ | ○ | – | – | – | – | – | |
| ● 1 | ● 1 | ● 1 | ● 1 | ● 1 | ● 1 | ● 1 | ● 1 | ● 1 | ● 1 | | | | | | |
| 1 | 1 | 1 | 1 | 2 | 2 | 6 4) | 6 4) | | | 10 | 10 | 1 | 1 | 1 | 10 |
| | | | | | | | | 2 | 2 | | | | | | |
| | | | | | | | | 6 5) | 6 5) | | | | | | |
| | | | | | | | | 10 5) | 10 5) | | | | | | |
| – | – | – | – | ○ | ○ | ○ | ○ | ○ | ○ | | | | | | |
| – | – | – | – | – | – | – | – | | | | | | | | |
| | | | | | | | | ○ | – | | | | | | |
| | | | | | | | | – | – | | | | | | |

● Basic version
○ Option
◇ Function is dependent on operating software
– Not possible

Order No.

**Control structure/application** (continued)

| | |
|---|---|
| CNC main memory (buffered) for programs and data in MB (SINUMERIK 810D/840D: max. 0.25 MB is reserved by technology cycles from Siemens) | |
| NCU 561.4/NCU 571.4/NCU 572.4 | |
| NCU 573.4 | |
| NCU 573.5 | |
| Expansion of CNC main memory by 1 MB | **6FC5 251-0AD02-0AA0** |
| CNC main memory, maximum configuration | |
| NCU 561.4/NCU 571.4/NCU 572.4/NCU 573.4 | |
| NCU 573.5 | |
| Axes/spindles or positioning axes/auxiliary spindles | |
| • Maximum configuration of axes | |
| NCU 561.4 | |
| NCU 571.4 | |
| NCU 572.4/NCU 573.4/NCU 573.5 | |
| • Maximum configuration of spindles | |
| NCU 561.4 | |
| NCU 571.4 | |
| NCU 572.4/NCU 573.4/NCU 573.5 | |
| • Maximum configuration of axes and spindles | |
| NCU 561.4 | |
| NCU 571.4 | |
| NCU 572.4/NCU 573.4/NCU 573.5 | |
| • Configuration per channel axes incl. spindles | |
| NCU 561.4 | |
| NCU 571.4 | |
| NCU 572.4/NCU 573.4/NCU 573.5 | |
| Each additional interpolation axis/spindle [1] | **6FC5 251-0AA03-0AA0** |
| NCU 561.4 | |
| NCU 571.4/NCU 572.4/NCU 573.4/NCU 573.5 | |

1) Option: If number of axes + spindles > 5.
2) With system software Plus (requirements: PCU with 1.2 GHz).
With system software Basic: 6.
With system software Universal: 10.
3) Display of max. 5 axes + 1 spindle.
4) Requirement: Uninterruptible power supply and SW Version 2.3.

| SINUMERIK 802 | | | | SINUMERIK 810D powerline/840Di/840D powerline | | | | | | | | | | | |
|---|---|---|---|---|---|---|---|---|---|---|---|---|---|---|---|
| 802S base line | 802C base line | 802D base line | 802D | 810DE power-line | 810D power-line | 840DiE | 840Di | 840DE power-line | 840D power-line | HMI Ad-van-ced | HMI Em-bed-ded | Shop Mill | Manual Turn | Shop Turn | HT 6 |
| | | | | | | | | | | Note on operating software<br>Blank field: Function is not dependent on operating software | | | | | |
| ● 0.25 | ● 0.25 | ● 0.25 | ● 0.25 | ● 0.5 | ● 0.5 | ● 0.5 | ● 0.5 | | | | | | | | |
| | | | | | | | | ● 0.5 | ● 0.5 | | | | | | |
| | | | | | | | | ● 2.5 | ● 2.5 | | | | | | |
| | | | | | | | | ● 3 | ● 3 | | | | | | |
| – | – | – | – | ○ | ○ | – | – | ○ | ○ | | | | | | |
| 0.25 | 0.25 | 0.25 | 0.25 | 2.5 | 2.5 | ● 2.5 [4] | ● 2.5 [4] | | | | | | | | |
| | | | | | | | | 2.5 | 2.5 | | | | | | |
| | | | | | | | | 6 | 6 | | | | | | |
| ● 4 | ● 4 | ● 3 | ● 5 | ● 5 | ● 5 | ● 5 | ● 5 | ● 5 | ● 5 | | | | | | |
| 3 | 3 | 2 | 4 | 6 | 6 | 18 [2] | 18 [2] | | | 31 | 31 | 12 | 2 | 12 | 31 |
| | | | | | | | | 2 | 2 | | | | | | |
| | | | | | | | | 6 | 6 | | | | | | |
| | | | | | | | | 31 | 31 | | | | | | |
| 1 | 1 | 1 | 1+1 | 2 | 2 | 18 [2] | 18 [2] | | | 31 | 31 | 1 | 1+C | 3+2C | 31 |
| | | | | | | | | 2 | 2 | | | | | | |
| | | | | | | | | 6 | 6 | | | | | | |
| | | | | | | | | 31 | 31 | | | | | | |
| 4 | 4 | 3 | 5 | 6 | 6 | 18 [2] | 18 [2] | | | 31 | 31 | 12 [3] | 4 | 12 [3] | 31 |
| | | | | | | | | 2 | 2 | | | | | | |
| | | | | | | | | 6 | 6 | | | | | | |
| | | | | | | | | 31 | 31 | | | | | | |
| 4<br>1 | 4<br>1 | 3<br>1 | 5<br>1 (1+1) | 6<br>2 | 6<br>2 | 12 [2]<br>12 [2] | 12 [2]<br>12 [2] | | | 12<br>12 | 12<br>12 | 12<br>1 | 4<br>1 | 12<br>3 | 12<br>12 |
| | | | | | | | | 2 | 2 | | | | | | |
| | | | | | | | | 6 | 6 | | | | | | |
| | | | | | | | | 12 | 12 | | | | | | |
| – | – | – | – | ○ | ○ | ○ | ○ | | | | | | | | |
| | | | | | | | | – | – | | | | | | |
| | | | | | | | | ○ | ○ | | | | | | |

● Basic version
○ Option
◇ Function is dependent on operating software
– Not possible

| | Order No. |
|---|---|
| **Control structure/application** (continued) | |
| Each additional positioning axis (axis-specific feed) or auxiliary spindle (spindle-specific speed) [1] | **6FC5 251-0AA04-0AA0** |
| NCU 561.4 | |
| NCU 571.4/NCU 572.4/NCU 573.4/NCU 573.5 | |
| Activation of internal drive control of 6th axis for positioning tasks (contains additional positioning axis or auxiliary spindle) | **6FC5 451-0AF01-0AA0** |
| Activation of internal drive control of 6th axis for interpolation tasks (contains additional interpolation axis/spindle) | **6FC5 451-0AF02-0AA0** |
| Additionally as a package: 2nd machining channel and maximum memory configuration | **6FC5 451-0AF03-0AA0** |
| Additionally as a package: 4 machining channels and 13 axes | **6FC5 251-0AD01-0AA0** |
| NCU 561.4/NCU 571.4 | |
| NCU 572.4/NCU 573.4/NCU 573.5 | |
| Connection of FM 354 as PLC positioning axis | See Basic Components |
| Connection of FM 353 as PLC positioning axis | See Basic Components |
| **Measuring systems that can be connected** | |
| Max. number | |
| NCU 561.4 | |
| NCU 571.4 | |
| NCU 572.4/NCU 573.4/NCU 573.5 | |
| Incremental rotary measuring system with RS 422 (TTL) | |
| Linear incremental encoder with current signals | |
| • Via external EXE | |
| • Via SIMODRIVE 611 digital closed-loop control module | |
| Linear incremental encoder with sin/cos 1 $V_{PP}$ | |
| • On-board | |
| • Via external EXE | |
| • Via SIMODRIVE 611 digital closed-loop control module | |
| • Via SIMODRIVE 611 universal HR incremental shaft encoder output | |
| • Via SIMODRIVE 611 universal HR (linear axis) | |
| Linear incremental encoder with distance-coded reference marks | |
| • On-board | |
| • Via SIMODRIVE 611 digital closed-loop control module | |
| • Via SIMODRIVE 611 universal HR (closed-loop control module) | |

1) Option: If number of axes + spindles > 5.
2) For spindle only.
3) SINUMERIK 810D measurement channels and via SIMODRIVE 611 digital closed-loop control module.
4) Two measurement systems per axis.
5) Second measurement system for one axis via 2nd axis SIMODRIVE 611 universal HR or ADI 4.
6) For analog axes via ADI 4.

| SINUMERIK 802 | | | | SINUMERIK 810D powerline/840Di/840D powerline | | | | | | | | | | | | |
|---|---|---|---|---|---|---|---|---|---|---|---|---|---|---|---|---|
| 802S base line | 802C base line | 802D base line | 802D | 810DE power-line | 810D power-line | 840DiE | 840Di | 840DE power-line | 840D power-line | Note on operating software<br>Blank field: Function is not dependent on operating software<br>HMI Ad-van-ced | HMI Em-bed-ded | Shop Mill | Manual Turn | Shop Turn | HT 6 |
| – | – | – | – | ○ | ○ | ○ | ○ | | | | | | | | |
| | | | | | | | | – | – | | | | | | |
| | | | | | | | | ○ | ○ | | | | | | |
| – | – | – | – | ○ | ○ | – | – | – | – | | | | | | |
| – | – | – | – | ○ | ○ | – | – | – | – | | | | | | |
| – | – | – | – | ○ | ○ | – | – | – | – | | | | | | |
| – | – | – | – | – | – | ○ 8) | ○ 8) | | | | | | | | |
| | | | | | | | | – | – | | | | | | |
| | | | | | | | | ○ | ○ | | | | | | |
| – | – | – | – | ● | ● | – | – | ● | ● | | | | | | |
| – | – | – | – | ● | ● | – | – | ● | ● | | | | | | |
| 1 | 4 | 3 | 5 | 12 3) | 12 3) | 36 4) 5) | 36 4) 5) | | | | | | | | |
| | | | | | | | | 4 4) | 4 4) | | | | | | |
| | | | | | | | | 12 4) | 12 4) | | | | | | |
| | | | | | | | | 62 4) | 62 4) | | | | | | |
| ● 2) | ● | ● 2) | ● 2) | – | – | ● 6) | ● 6) | – | – | | | | | | |
| – | ● | ● 9) | ● 9) | – | – | – | – | – | – | | | | | | |
| – | – | – | – | ● | ● | – | – | ● | ● | | | | | | |
| – | – | – | – | ● | ● | – | – | – | – | | | | | | |
| – | ● | ● 9) | ● 9) | – | – | – | – | – | – | | | | | | |
| – | – | – | – | ● | ● | – | – | ● | ● | | | | | | |
| – | ● | – | – | – | – | – | – | – | – | | | | | | |
| – | – | ● | ● | ○ 7) | ○ 7) | ● | ● | ○ 7) | ○ 7) | | | | | | |
| – | – | – | – | ● | ● | – | – | – | – | | | | | | |
| – | – | – | – | ● | ● | – | – | ● | ● | | | | | | |
| – | – | – | – | ○ 7) | ○ 7) | ● | ● | ○ 7) | ○ 7) | | | | | | |

7) For positioning tasks.
8) With system software Plus (requirements: PCU with 1.2 GHz).
9) Via ADI 4.

● Basic version
○ Option
◇ Function is dependent on operating software
– Not possible

| | Order No. |
|---|---|
| **Measurement systems that can be connected** (continued) | |
| Rotary measurement systems with distance-coded reference marks | |
| • On-board | |
| • Via SIMODRIVE 611 digital closed-loop control module | |
| • Via SIMODRIVE 611 universal HR (closed-loop control module) | |
| Absolute value encoder connection with SSI interface | |
| Absolute value encoder connection with EnDat linear/rotary | |
| • On-board | |
| • Via SIMODRIVE 611 digital closed-loop control module | |
| • Via SIMODRIVE 611 universal HR (closed-loop control module) | |
| Absolute value/incremental encoder installed in 1FT6/1FK | |
| • On-board | |
| • Via SIMODRIVE 611 digital closed-loop control module | |
| • Via SIMODRIVE 611 universal HR (closed-loop control module) | |
| Incremental encoder with sin/cos 1 $V_{PP}$ | |
| • On-board | |
| • Via SIMODRIVE 611 digital closed-loop control module | |
| • Via SIMODRIVE 611 universal HR (closed-loop control module) | |
| Resolver installed in 1FT6/1FK | |
| • Via SIMODRIVE 611 universal HR (closed-loop control module) | |
| • Via SIMODRIVE base line (only 1FK7 with 2-pole resolver) | |
| **CNC functionality: Program functions** | |
| Dynamic preprocessing memory (FIFO) | |
| Look Ahead | |
| Program preprocessing | **6FC5 251-0AC02-0AA0** |
| Axis/spindle replacement | |
| Geometry axes, switchable online in the CNC program | |
| Frame concept | |
| Inclined-surface machining with frames | |

1) Second measurement system for one axis via 2nd axis SIMODRIVE 61 universal HR.
2) For analog axes with ADI 4.
3) For positioning tasks.
4) Number of traversing blocks cannot be parameterized.
5) Not as motor measuring system, only for spindles or rotary axes for direct position sensing.
6) Via SIMODRIVE 611 universal E HR closed-loop control module.

| SINUMERIK 802 | | | | SINUMERIK 810D powerline/840Di/840D powerline | | | | | | Note on operating software<br>Blank field: Function is not dependent on operating software | | | | | |
|---|---|---|---|---|---|---|---|---|---|---|---|---|---|---|---|
| 802S base line | 802C base line | 802D base line | 802D | 810DE power-line | 810D power-line | 840DiE | 840Di | 840DE power-line | 840D power-line | HMI Ad-van-ced | HMI Em-bed-ded | Shop Mill | Manual Turn | Shop Turn | HT 6 |
| – | – | – | – | ● | ● | – | – | – | – | | | | | | |
| – | – | – | – | ● | ● | – | – | ● | ● | | | | | | |
| – | – | – | – | ○ 5) | ○ 5) | – | – | ○ 5) | ○ 5) | | | | | | |
| – | – | – | – | – | – | ● 2) | ● 2) | ● | ● | | | | | | |
| – | – | – | – | ● | ● | – | – | – | – | | | | | | |
| – | – | – | – | ● | ● | – | – | ● | ● | | | | | | |
| – | – | ● 6) | ● 6) | ○ 3) | ○ 3) | ● 1) | ● 1) | ○ 3) | ○ 3) | | | | | | |
| – | – | – | – | ● | ● | – | – | – | – | | | | | | |
| – | – | – | – | ● | ● | – | – | ● | ● | | | | | | |
| – | – | ● 6) | ● 6) | ○ 3) | ○ 3) | ● | ● | ○ 3) | ○ 3) | | | | | | |
| – | – | – | – | ● | ● | – | – | – | – | | | | | | |
| – | – | – | – | ● | ● | – | – | ● | ● | | | | | | |
| – | ● | ● 6) | ● 6) | ○ 3) | ○ 3) | ● | ● | ○ 3) | ○ 3) | | | | | | |
| – | ● | – | – | ○ 3) | ○ 3) | ● | ● | ○ 3) | ○ 3) | | | | | | |
| – | ● | – | – | – | – | – | – | – | – | | | | | | |
| ● | ● | ● | ● | ● | ● | ● | ● | ● | ● | | | | | | |
| ● 4) | ● 4) | ● 4) | ● 4) | ● | ● | ● | ● | ● | ● | | | | | | |
| – | – | – | – | ○ | ○ | ○ | ○ | ○ | ○ | | | | | | |
| – | – | – | – | ● | ● | ● | ● | ● | ● | | | | | | |
| – | – | – | – | ● | ● | ● | ● | ● | ● | | | | | | |
| – | – | ● | ● | ● | ● | ● | ● | ● | ● | | | | | | |
| – | – | – | – | ● | ● | ● | ● | ● | ● | | | | | | |

1

● Basic version
○ Option
◇ Function is dependent on operating software
– Not possible

| | Order No. |
|---|---|
| **CNC functionality: Axis functions** | |
| Feedrate override of 0 ... 200% | |
| Feedrate override, axis-specific of 0 ... 200% | |
| Traversing range ± 9 decades | |
| Rotary axis, turning endlessly | |
| Measuring system 1 and 2, selectable | |
| Speed, max. 300 m/s | |
| Acceleration with jerk limitation | |
| Programmable acceleration | |
| Feedrate interpolation | |
| Separate path feed for corners and chamfers | |
| Traversing to fixed stop | **6FC5 255-0AB02-0AA0** |
| Traversing to fixed stop (without Force Control) | **6FC5 655-0AA01-0AA0** |
| Follow-up mode | |
| Pair of synchronized axes (gantry axes)<br>Max. number | **6FC5 255-0AB00-0AA0** |
| NCU 561.4 | |
| NCU 571.4/NCU 572.4/NCU 573.4/NCU 573.5 | |
| Trailing axes (TRAIL) | |
| Master/slave for drives | **6FC5 251-0AC07-0AA0** |
| NCU 561.4 | |
| NCU 571.4/NCU 572.4/NCU 573.4/NCU 573.5 | |
| Analog axis [1] | **6FC5 251-0AC06-0AA0** |
| Setpoint exchange | **6FC5 251-0AE76-0AA0** |
| Tangential control | **6FC5 251-0AB11-0AA0** |
| NCU 561.4 | |
| NCU 571.4/NCU 572.4/NCU 573.4/NCU 573.5 | |
| Position switching signals/cam controller | **6FC5 251-0AB07-0AA0** |

1) SINUMERIK 840DE powerline/840D powerline: From the 6th axis upwards, the option "Each additional interpolating axis/spindle" is included. For SINUMERIK 840DiE/840Di with ADI 4.

2) In SW Version 6.4 and higher, functionality is included in the NCU system software.

3) In SW Version 7.1 and higher, functionality is included in the NCU system software.

| SINUMERIK 802 | | | | SINUMERIK 810D powerline/840Di/840D powerline | | | | | | | | | | | |
|---|---|---|---|---|---|---|---|---|---|---|---|---|---|---|---|
| 802S base line | 802C base line | 802D base line | 802D | 810DE power-line | 810D power-line | 840DiE | 840Di | 840DE power-line | 840D power-line | Note on operating software<br>Blank field: Function is not dependent on operating software<br>HMI Ad-van-ced | HMI Em-bed-ded | Shop Mill | Manual Turn | Shop Turn | HT 6 |
| 120 | 120 | ● | ● | ● | ● | ● | ● | ● | ● | | | | | | |
| – | – | ● | ● | ● | ● | ● | ● | ● | ● | | | | | | |
| ● | ● | ● | ● | ● | ● | ● | ● | ● | ● | | | | | | |
| – | – | – | ● | ● | ● | ● | ● | ● | ● | | | | | | |
| – | – | – | – | ● | ● | ● | ● | ● | ● | | | | | | |
| 12 | ● | ● | ● | ● | ● | ● | ● | ● | ● | | | | | | |
| – | – | – | ● | ● | ● | ● | ● | ● | ● | | | | | | |
| ● | ● | ● | ● | ● | ● | ● | ● | ● | ● | | | | | | |
| – | – | – | – | ● | ● | ● | ● | ● | ● | | | | | | |
| – | – | – | – | ● | ● | ● | ● | ● | ● | | | | | | |
| – | – | – | – | ○ | ○ | ○ | ○ | ○ | ○ | | | | | | |
| – | – | – | ○ | – | – | – | – | – | – | | | | | | |
| – | ● | ● | ● | ● | ● | ● | ● | ● | ● | | | | | | |
| – | – | – | – | ○ 1 | ○ 1 | ○ 3 | ○ 3 | | | | | | | | |
| | | | | | | | | – | – | | | | | | |
| | | | | | | | | ○ 3 | ○ 3 | | | | | | |
| – | – | – | – | ● | ● | ● | ● | ● | ● | | | | | | |
| – | – | – | – | ○ | ○ | – | – | | | | | | | | |
| | | | | | | | | – | – | | | | | | |
| | | | | | | | | ○ | ○ | | | | | | |
| – | – | – | – | – | – | – | – | ○ 2) | ○ 2) | | | | | | |
| – | – | – | – | – | – | – | – | ○ 3) | ○ 3) | | | | | | |
| – | – | – | – | ○ | ○ | ○ | ○ | | | | | | | | |
| | | | | | | | | – | – | | | | | | |
| | | | | | | | | ○ | ○ | | | | | | |
| – | – | – | – | ○ | ○ | ○ | ○ | ○ | ○ | | | | | | |

● Basic version
○ Option
◇ Function is dependent on operating software
– Not possible

| | Order No. |
|---|---|
| **CNC functionality: Axis functions** (continued) | |
| Link axis [1] | **6FC5 251-0AD10-0AA0** |
| NCU 561.4/NCU 571.4/NCU 572.4 | |
| NCU 573.4/NCU 573.5 | |
| Axis container | **6FC5 251-0AE01-0AA0** |
| NCU 561.4/NCU 571.4/NCU 572.4 | |
| NCU 573.4/NCU 573.5 | |
| Setpoint linkage for multiple NCUs [1] | **6FC5 251-0AF02-0AA0** |
| NCU 561.4/NCU 571.4/NCU 572.4 | |
| NCU 573.4/NCU 573.5 | |
| Fast IPO link [1] | **6FC5 251-0AF03-0AA0** |
| NCU 561.4/NCU 571.4/NCU 572.4 | |
| NCU 573.4/NCU 573.5 | |
| Advanced Position Control APC | **6FC5 251-0AF04-0AA0** |
| **CNC functionality: Spindle functions** | |
| Analog spindle speed | |
| Digital spindle speed | |
| Spindle speed, max. programmable value range: REAL ± 3.4028 ex 38 (display: ± 999 999 999.9999) | |
| Spindle override of 0 ... 200% | |
| 5 gear stages | |
| Automatic gear stage selection | |
| Oriented spindle stop | |
| Spindle speed limitation (min. and max.) | |
| Constant cutting rate | |
| Spindle control via PLC (positioning, oscillation) | |
| Changeover to axis mode | |
| Axis synchronization on-the-fly | |
| Thread run-in and run-out programmable | |
| Thread cutting with constant or variable pitch | |
| NCU 561.4 | |
| NCU 571.4/NCU 572.4/NCU 573.4/NCU 573.5 | |
| Tapping with/without compensating chuck | |
| Synchronous spindle/multi-edge turning | **6FC5 255-0AB01-0AA0** |
| NCU 561.4 | |
| NCU 571.4/NCU 572.4/NCU 573.4/NCU 573.5 | |

1) Requirement: Link module.
2) Value range: 999 999.999.
3) Only SPOS and basic functions.
4) Via ADI 4.

| SINUMERIK 802 | | | | SINUMERIK 810D powerline/840Di/840D powerline | | | | | | Note on operating software<br>Blank field: Function is not dependent on operating software | | | | | |
|---|---|---|---|---|---|---|---|---|---|---|---|---|---|---|---|
| 802S base line | 802C base line | 802D base line | 802D | 810DE power-line | 810D power-line | 840DiE | 840Di | 840DE power-line | 840D power-line | HMI Ad-van-ced | HMI Em-bed-ded | Shop Mill | Manual Turn | Shop Turn | HT 6 |
| – | – | – | – | – | – | – | – | | | | | | | | |
| | | | | | | | | – | – | | | | | | |
| | | | | | | | | ○ | ○ | | | | | | |
| – | – | – | – | – | – | ○ | ○ | | | | | | | | |
| | | | | | | | | – | – | | | | | | |
| | | | | | | | | ○ | ○ | | | | | | |
| – | – | – | – | – | – | – | – | | | | | | | | |
| | | | | | | | | – | – | | | | | | |
| | | | | | | | | ○ | ○ | | | | | | |
| – | – | – | – | – | – | – | – | | | | | | | | |
| | | | | | | | | – | – | | | | | | |
| | | | | | | | | ○ | ○ | | | | | | |
| – | – | – | – | – | – | – | – | ○ | ○ | | | | | | |
| ● | ● | ● | ● | – | – | ● 4) | ● 4) | – | – | | | | | | |
| – | – | ● | ● | ● | ● | ● | ● | ● | ● | | | | | | |
| ● 2) | ● 2) | ● | ● | ● | ● | ● | ● | ● | ● | | | | | | |
| 120 | 120 | ● | ● | ● | ● | ● | ● | ● | ● | | | | | | |
| ● | ● | ● | ● | ● | ● | ● | ● | ● | ● | | | | | | |
| ● | ● | ● | ● | ● | ● | ● | ● | ● | ● | | | | | | |
| ● | ● | ● | ● | ● | ● | ● | ● | ● | ● | | | | | | |
| ● | ● | ● | ● | ● | ● | ● | ● | ● | ● | | | | | | |
| ● | ● | ● | ● | ● | ● | ● | ● | ● | ● | | | | | | |
| – | – | – | – | ● | ● | ● | ● | ● | ● | | | | | | |
| ● 3) | ● 3) | ● 3) | ● 3) | ● | ● | ● | ● | ● | ● | | | | | | |
| – | – | – | – | ● | ● | ● | ● | ● | ● | | | | | | |
| ● | ● | ● | ● | ● | ● | ● | ● | ● | ● | | | | | | |
| ● | ● | ● | ● | ● | ● | ● | ● | | | | | | | | |
| | | | | | | | | – | – | | | | | | |
| | | | | | | | | ● | ● | | | | | | |
| ● | ● | ● | ● | ● | ● | ● | ● | ● | ● | | | | | | |
| – | – | – | – | ○ | ○ | ○ | ○ | | | | | | | | |
| | | | | | | | | – | – | | | | | | |
| | | | | | | | | ○ | ○ | | | | | | |

● Basic version
○ Option
◇ Function is dependent on operating software
– Not possible

| | Order No. |
|---|---|
| **CNC functionality: Interpolations** | |
| Universal interpolator NURBS (non-uniform rational B-splines) | |
| Continuous-path mode with programmable rounding clearance | |
| Linear interpolation axes | |
| • Maximum | |
| NCU 561.4 | |
| NCU 571.4/NCU 572.4/NCU 573.4/NCU 573.5 | |
| Multi-axis interpolation (> 4 interpolating axes) | **6FC5 251-0AA16-0AA0** |
| Circle via center point and end point | |
| NCU 561.4 | |
| NCU 571.4/NCU 572.4/NCU 573.4/NCU 573.5 | |
| Circle via interpolation point | |
| NCU 561.4 | |
| NCU 571.4/NCU 572.4/NCU 573.4/NCU 573.5 | |
| Helical interpolation: | |
| NCU 561.4 | |
| NCU 571.4/NCU 572.4/NCU 573.4/NCU 573.5 | |
| Spline interpolation (A, B and C splines/compressor) for 3-axis machining | **6FC5 251-0AF14-0AA0** |
| NCU 561.4 | |
| NCU 571.4/NCU 572.4/NCU 573.4/NCU 573.5 | |
| Spline interpolation (A, B and C splines/compressor) for 5-axis machining | **6FC5 251-0AA14-0AA0** |
| NCU 561.4 | |
| NCU 571.4/NCU 572.4/NCU 573.4/NCU 573.5 | |
| Polynomial interpolation | **6FC5 251-0AA15-0AA0** |
| NCU 561.4 | |
| NCU 571.4/NCU 572.4/NCU 573.4/NCU 573.5 | |
| Master-value coupling and curve table interpolation | **6FC5 251-0AD06-0AA0** |
| NCU 561.4 | |
| NCU 571.4/NCU 572.4/NCU 573.4/NCU 573.5 | |
| Involute interpolation | **6FC5 251-0AF01-0AA0** |
| NCU 561.4 | |
| NCU 571.4/NCU 572.4/NCU 573.4/NCU 573.5 | |

1) With restricted functionality, see export information.
2) With system software Plus (requirements: PCU with 1.2 GHz).
With system software Basic: 6
With system software Universal: 10.
3) Only tapping: Axis + spindle.

| SINUMERIK 802 | | | | SINUMERIK 810D powerline/840Di/840D powerline | | | | | | | | | | | |
|---|---|---|---|---|---|---|---|---|---|---|---|---|---|---|---|
| 802S base line | 802C base line | 802D base line | 802D | 810DE power-line | 810D power-line | 840DiE | 840Di | 840DE power-line | 840D power-line | Note on operating software<br>Blank field: Function is not dependent on operating software<br>HMI Ad-van-ced | HMI Em-bed-ded | Shop Mill | Manual Turn | Shop Turn | HT 6 |
| – | – | – | – | ● | ● | ● | ● | ● | ● | | | | | | |
| – | – | – | – | ● | ● | ● | ● | ● | ● | | | | | | |
| ● | ● | ● | ● | ● | ● | ● | ● | ● | ● | | | | | | |
| 3 | 3 | 2 | 4 | 4 | 4 | 4 | 4 | 4 | 4 | | | | | | |
| 3 | 3 | 2 | 4 | 4 | 6 | 4 | 12 [2] | | | | | | | | |
| | | | | | | | | 2 [3] | 2 [3] | | | | | | |
| | | | | | | | | 4 | 12 | | | | | | |
| – | – | – | – | – | ○ | – | ○ | – | ○ | | | | | | |
| ● | ● | ● | ● | ● | ● | ● | ● | | | | | | | | |
| | | | | | | | | – | – | | | | | | |
| | | | | | | | | ● | ● | | | | | | |
| ● | ● | ● | ● | ● | ● | ● | ● | | | | | | | | |
| | | | | | | | | – | – | | | | | | |
| | | | | | | | | ● | ● | | | | | | |
| 2D+1 | 2D+1 | – | 2D+2 | 2D+2 | 2D+2 | 2D+2 | 2D+6 | | | | | | | | |
| | | | | | | | | – | – | | | | | | |
| | | | | | | | | 2D+2 | 2D+6 | | | | | | |
| – | – | – | – | ○ | ○ | ○ | ○ | | | | | | | | |
| | | | | | | | | – | – | | | | | | |
| | | | | | | | | ○ | ○ | | | | | | |
| – | – | – | – | – | – | ○ | ○ | | | | | | | | |
| | | | | | | | | – | – | | | | | | |
| | | | | | | | | ○ | ○ | | | | | | |
| – | – | – | – | ○ | ○ | ○ | ○ | | | | | | | | |
| | | | | | | | | – | – | | | | | | |
| | | | | | | | | ○ | ○ | | | | | | |
| – | – | – | – | ○ [1] | ○ | ○ [1] | ○ | | | | | | | | |
| | | | | | | | | – | – | | | | | | |
| | | | | | | | | ○ [1] | ○ | | | | | | |
| – | – | – | – | ○ | ○ | ○ | ○ | | | | | | | | |
| | | | | | | | | – | – | | | | | | |
| | | | | | | | | ○ | ○ | | | | | | |

● Basic version
○ Option
◇ Function is dependent on operating software
– Not possible

| | Order No. |
|---|---|
| **CNC functionality: Interpolations** (continued) | |
| Electronic gear EG | **6FC5 251-0AE00-0AA0** |
| NCU 561.4 | |
| NCU 571.4/NCU 572.4/NCU 573.4/NCU 573.5 | |
| Axial coupling in the machine coordinate system (MCS coupling) | **6FC5 251-0AD11-0AA0** |
| NCU 561.4 | |
| NCU 571.4/NCU 572.4/NCU 573.4/NCU 573.5 | |
| Continue machining at the contour (retrace support) | **6FC5 251-0AE72-0AA0** |
| Advanced Processing 1 | **6FC5 251-0AF10-0AA0** |
| Advanced Processing 2 | **6FC5 251-0AF11-0AA0** |
| **CNC functionality: Transformations** | |
| Cartesian point-to-point (PTP) traversing | |
| NCU 561.4 | |
| NCU 571.4/NCU 572.4/NCU 573.4/NCU 573.5 | |
| TRANSMIT/peripheral surface transformation | **6FC5 251-0AB01-0AA0** |
| NCU 561.4 | |
| NCU 571.4/NCU 572.4/NCU 573.4/NCU 573.5 | |
| TRANSMIT/peripheral surface transformation | **6FC5 651-0AA02-0AA0** |
| Inclined axis | **6FC5 251-0AB06-0AA0** |
| NCU 561.4 | |
| NCU 571.4/NCU 572.4/NCU 573.4/NCU 573.5 | |
| Chained transformations (inclined axis TRAANG to TRAORI/Universal milling head/TRANSMIT/TRACYL) | |
| NCU 561.4 | |
| NCU 571.4/NCU 572.4/NCU 573.4/NCU 573.5 | |
| Machining package 5 axes [1] | **6FC5 251-0AA10-0AA0** |
| Handling transformation package | **6FC5 251-0AD07-0AA0** |
| Generic transformation | |
| NCU 561.4 | |
| NCU 571.4/NCU 572.4/NCU 573.4/NCU 573.5 | |

1) Contains the option "Multi-axis interpolation".
2) Only with system software Universal and Plus.
3) Only with system software Plus.
4) With 3-axis and 4-axis transformation.

1

| SINUMERIK 802 | | | | SINUMERIK 810D powerline/840Di/840D powerline | | | | | | Note on operating software<br>Blank field: Function is not dependent on operating software | | | | | |
|---|---|---|---|---|---|---|---|---|---|---|---|---|---|---|---|
| 802S base line | 802C base line | 802D base line | 802D | 810DE power-line | 810D power-line | 840DiE | 840Di | 840DE power-line | 840D power-line | HMI Ad-van-ced | HMI Em-bed-ded | Shop Mill | Manual Turn | Shop Turn | HT 6 |
| – | – | – | – | – | – | ○ | ○ | | | | | | | | |
| | | | | | | | | – | – | | | | | | |
| | | | | | | | | ○ | ○ | | | | | | |
| – | – | – | – | – | – | – | ○ | | | | | | | | |
| | | | | | | | | – | – | | | | | | |
| | | | | | | | | – | ○ 5) | | | | | | |
| – | – | – | – | ○ | ○ | ○ | ○ | ○ 5) | ○ 5) | | | | | | |
| – | – | – | – | – | – | ○ 2) | ○ 2) | – | – | | | | | | |
| – | – | – | – | – | – | ○ 3) | ○ 3) | – | – | | | | | | |
| – | – | – | – | ● | ● | ● | ● | | | | | | | | |
| | | | | | | | | – | – | | | | | | |
| | | | | | | | | ● | ● | | | | | | |
| – | – | – | – | ○ | ○ | ○ | ○ | | | | | | | | |
| | | | | | | | | – | – | | | | | | |
| | | | | | | | | ○ | ○ | | | | | | |
| – | – | – | ○ | – | – | – | – | – | – | | | | | | |
| – | – | – | – | ○ | ○ | ○ | ○ | | | | | | | | |
| | | | | | | | | – | – | | | | | | |
| | | | | | | | | ○ | ○ | | | | | | |
| – | – | – | – | ● | ● | ● | ● | | | | | | | | |
| | | | | | | | | – | – | | | | | | |
| | | | | | | | | ● | ● | | | | | | |
| – | – | – | – | – | – | – | ○ | – | ○ | | | | | | |
| – | – | – | – | – | ○ | – | ○ | – | ○ 5) | | | | | | |
| – | – | – | – | ● 4) | ● 4) | ● 4) | ● | | | | | | | | |
| | | | | | | | | – | – | | | | | | |
| | | | | | | | | ● 4) | ● | | | | | | |

5) Loadable compile cycle in SW Version 6.4 and higher in the NCU system software.

1

● Basic version
○ Option
◇ Function is dependent on operating software
– Not possible

| | Order No. |
|---|---|
| **CNC functionality: Measuring** | |
| Measuring Stage 1<br>2 sensors (switching) with/without deletion of distance-to-go | See HMI Software |
| Measuring Stage 2<br>(logging of measurement results, measurement functions from synchronized actions, cyclic measurement) | **6FC5 250-0AD00-0AA0**<br>See HMI Software |
| **CNC functionality: Technologies** | |
| Punching/nibbling | **6FC5 251-0AC00-0AA0** |
| NCU 561.4 | |
| NCU 571.4/NCU 572.4/NCU 573.4/NCU 573.5 | |
| Oscillation functions (block-related, modal and asynchronous) | **6FC5 251-0AB04-0AA0** |
| More than one feed in block (e. g. for calipers) | |
| Handwheel override | |
| Contour handwheel | |
| Electronic transfer | **6FC5 250-0AD05-0AA0** |
| NCU 561.4 | |
| NCU 571.4/NCU 572.4/NCU 573.4/NCU 573.5 | |
| **CNC functionality: Motion-synchronous action** | |
| High-speed CNC inputs/outputs | |
| • 4 digital inputs/4 digital outputs on-board | |
| • Expansion via NCU terminal block<br>32 digital inputs/32 digital outputs,<br>8 analog inputs/8 analog outputs | See Basic Components |
| • Expansion via SIMATIC S7 I/O<br>32 digital inputs/32 digital outputs<br>4 analog inputs/4 analog outputs | |
| Synchronized action (max. 16) and high-speed auxiliary function output | |
| Synchronized action Stage 2 (up to 255 parallel actions per channel, technology cycles) | **6FC5 251-0AD05-0AA0** |
| Positioning axes and spindles via synchronized actions (command axes) | |
| Analog value control in interpolation cycle (requirement: analog output) | |
| Path velocity-dependent analog output (laser power control) | **6FC5 251-0AC04-0AA0** |
| NCU 561.4 | |
| NCU 571.4/NCU 572.4/NCU 573.4/NCU 573.5 | |

1) 1 sensor.
2) With restricted functionality, see export information.
3) Requirement: MCI board extension.
4) Requirement: SIMATIC DP ET 200 analog module.

| SINUMERIK 802 | | | | SINUMERIK 810D powerline/840Di/840D powerline | | | | | | Note on operating software<br>Blank field: Function is not dependent on operating software | | | | | |
|---|---|---|---|---|---|---|---|---|---|---|---|---|---|---|---|
| 802S base line | 802C base line | 802D base line | 802D | 810DE power-line | 810D power-line | 840DiE | 840Di | 840DE power-line | 840D power-line | HMI Ad-van-ced | HMI Em-bed-ded | Shop Mill | Manual Turn | Shop Turn | HT 6 |
| – | – | – | ● 1) | ● | ● | ● 3) | ● 3) | ● | ● | | | | | | |
| – | – | – | – | ○ 2) | ○ | ○ 2) 3) | ○ 3) | ○ 2) | ○ | | | | | | |
| – | – | – | – | – | – | ○ | ○ | | | | | | | | |
| | | | | | | | | – | – | | | | | | |
| | | | | | | | | ○ | ○ | | | | | | |
| – | – | – | – | ○ | ○ | ○ | ○ | ○ | ○ | | | | | | |
| – | – | – | – | ● | ● | ● | ● | ● | ● | | | | | | |
| – | – | – | – | ● | ● | ● | ● | ● | ● | | | | | | |
| – | – | – | – | ● | ● | ● | ● | ● | ● | | | | | | |
| – | – | – | – | – | – | ○ 2) | ○ | | | | | | | | |
| | | | | | | | | – | – | | | | | | |
| | | | | | | | | ○ 2) | ○ | | | | | | |
| – | – | – | – | – | – | ● 3) | ● 3) | ● | ● | | | | | | |
| – | – | – | – | ○ | ○ | – | – | ○ | ○ | | | | | | |
| – | – | – | – | – | – | ○ | ○ | – | – | | | | | | |
| – | – | – | – | ● 2) | ● | ● 2) | ● | ● 2) | ● | | | | | | |
| – | – | – | – | ○ 2) | ○ | ○ 2) | ○ | ○ 2) | ○ | | | | | | |
| – | – | – | – | ● | ● | ● | ● | ● | ● | | | | | | |
| – | – | – | – | ● | ● | ● 4) | ● 4) | ● | ● | | | | | | |
| – | – | – | – | ○ | ○ | ○ 4) | ○ 4) | | | | | | | | |
| | | | | | | | | – | – | | | | | | |
| | | | | | | | | ○ | ○ | | | | | | |

● Basic version
○ Option
◇ Function is dependent on operating software
– Not possible

| | Order No. |
|---|---|
| **CNC functionality: Motion-synchronous action** (continued) | |
| Laser switching signal, high-speed | **6FC5 251-0AE74-0AA0** |
| NCU 561.4 | |
| NCU 571.4/NCU 572.4/NCU 573.4/NCU 573.5: 6/12/31 axes | |
| Clearance control | |
| • 1D in interpolation cycle via synchronized action | |
| • 1D/3D in position control cycle (incl. in interpolation cycle) | **6FC5 251-0AC05-0AA0** |
| NCU 561.4 | |
| NCU 571.4/NCU 572.4/NCU 573.4/NCU 573.5: 6/12/31 axes | |
| Evaluation of internal drive variables (prerequisite for Adaptive Control) | **6FC5 251-0AB17-0AA0** |
| Continuous Dressing (parallel dressing, online modification of the tool offset) | |
| NCU 561.4 | |
| NCU 571.4/NCU 572.4/NCU 573.4/NCU 573.5 | |
| Asynchronous subroutine ASUP [1] | |
| Interrupt routines with high-speed retraction from the contour | **6FC5 251-0AA00-0AA0** |
| Multiple mode actions (ASUPs and synchronized actions in all operating modes) | **6FC5 251-0AD04-0AA0** |
| **Open Architecture** | |
| HMI programming package (OEM contract required) | See HMI Software |
| HMI configuring package (OEM contract required) | See HMI Software |
| User-interface expansion (HMI Advanced/HMI Embedded) | See HMI Software |
| OA package NCK (OEM contract required) | See Basic Components |
| OA NCK compile cycles (runtime license) | **6FC5 251-0AA20-0AA0** See Basic Components |

1) High-speed CNC inputs/outputs required.
2) With restricted functionality, see export information.
3) 20 unreserved screens.
4) Configuration via PROFIBUS DP.

| SINUMERIK 802 | | | | SINUMERIK 810D powerline/840Di/840D powerline | | | | | | | | | | | |
|---|---|---|---|---|---|---|---|---|---|---|---|---|---|---|---|
| 802S base line | 802C base line | 802D base line | 802D | 810DE power-line | 810D power-line | 840DiE | 840Di | 840DE power-line | 840D power-line | Note on operating software<br>Blank field: Function is not dependent on operating software<br>HMI Ad-van-ced | HMI Em-bed-ded | Shop Mill | Manual Turn | Shop Turn | HT 6 |
| – | – | – | – | – | – | ○ | ○ | | | | | | | | |
| | | | | | | | | – | – | | | | | | |
| | | | | | | | | ○ 5) | ○ 5) | | | | | | |
| – | – | – | – | ● | ● | ● | ● | ● | ● | | | | | | |
| – | – | – | – | – | – | ○ 2) | ○ | | | | | | | | |
| | | | | | | | | – | – | | | | | | |
| | | | | | | | | ○ 2) 5) | ○ 5) | | | | | | |
| – | – | – | – | ○ 2) | ○ | ○ 2) 4) | ○ 4) | ○ 2) | ○ | | | | | | |
| – | – | – | – | ● 2) | ● | ● 2) | ● | | | | | | | | |
| | | | | | | | | – | – | | | | | | |
| | | | | | | | | ● 2) | ● | | | | | | |
| – | – | – | – | ● | ● | ● | ● | ● | ● | | | | | | |
| – | – | – | – | ○ | ○ | ○ | ○ | ○ | ○ | | | | | | |
| – | – | – | – | ○ | ○ | ○ | ○ | ○ | ○ | | | | | | |
| – | – | – | – | ○ | ○ | ○ | ○ | ○ | ○ | | | | | | |
| – | – | – | – | ○ | ○ | ○ | ○ | ○ | ○ | | | | | | |
| – | – | – | – | ◇ | ◇ | ◇ | ◇ | ◇ | ◇ | ○ 3) | ○ 3) | ○ 3) | ○ 3) | ○ 3) | ○ 3) |
| – | – | – | – | – | – | – | – | – | ○ | | | | | | |
| – | – | – | – | – | – | – | – | – | ○ | | | | | | |

5) Loadable compile cycle in SW Version 6.4 and higher in the NCU system software.

● Basic version
○ Option
◇ Function is dependent on operating software
– Not possible

Order No.

## CNC programming: Language

| | |
|---|---|
| Programming language (DIN 66025 and high-level language expansion) | |
| Main program calls from main programs and subroutines | |
| Subroutine levels/interrupt routines, max. | |
| Number of subroutine repetitions ≤ 9999 | |
| Number of levels for skippable blocks (/0 to /...) | |
| Polar coordinates | |
| NCU 561.4 | |
| NCU 571.4/NCU 572.4/NCU 573.4/NCU 573.5 | |
| 1/2/3-point contours | |
| Dimensions metric/inch, changeover manually or via program | |
| Inverse-time feedrate | |
| Auxiliary function output | |
| • Via M word, max. programmable value range: INT $2^{31}$-1 | |
| • Via H word, max. programmable value range: REAL ± 3.4028 ex 38 (display: ± 999 999 999.9999) INT $-2^{31}$ ... $2^{31}$-1 | |
| High-level language CNC with | |
| • User variables, configurable | |
| • Predefined user variables (arithmetic parameters), configurable | |
| • Read/write system variables | |
| • Indirect programming | |
| • Program jumps and branches | |
| • Program coordination with WAIT, START, INIT | |
| NCU 561.4 | |
| NCU 571.4/NCU 572.4/NCU 573.4/NCU 573.5 | |
| • Arithmetic and trigonometric functions | |
| • Comparing operations and logic combinations | |
| • Macro techniques | |
| • Control structures (IF-ELSE-ENDIF, WHILE, FOR, REPEAT, LOOP) | |
| • Commands to HMI | |
| • STRING functions | |

1) M function: 1 ... 99.

| SINUMERIK 802 | | | | SINUMERIK 810D powerline/840Di/840D powerline | | | | | | | | | | | |
|---|---|---|---|---|---|---|---|---|---|---|---|---|---|---|---|
| 802S base line | 802C base line | 802D base line | 802D | 810DE power-line | 810D power-line | 840DiE | 840Di | 840DE power-line | 840D power-line | Note on operating software<br>Blank field: Function is not dependent on operating software<br>HMI Ad-van-ced | HMI Em-bed-ded | Shop Mill | Manual Turn | Shop Turn | HT 6 |
| ● | ● | ● | ● | ● | ● | ● | ● | ● | ● | | | | | | |
| ● | ● | ● | ● | ● | ● | ● | ● | ● | ● | | | | | | |
| 4/0 | 4/0 | 8/0 | 8/0 | 11/4 | 11/4 | 11/4 | 11/4 | 11/4 | 11/4 | | | | | | |
| ● | ● | ● | ● | ● | ● | ● | ● | ● | ● | | | | | | |
| 1 | 1 | 1 | 1 | 8 | 8 | 8 | 8 | 8 | 8 | | | | | | |
| – | – | ● | ● | ● | ● | ● | ● | | | | | | | | |
| | | | | | | | | – | – | | | | | | |
| | | | | | | | | ● | ● | | | | | | |
| ● | ● | ● | ● | ● | ● | ● | ● | ● | ● | | | | | | |
| ● | ● | ● | ● | ● | ● | ● | ● | ● | ● | | | | | | |
| – | – | – | – | ● | ● | ● | ● | ● | ● | | | | | | |
| ● 1) | ● 1) | ● | ● | ● | ● | ● | ● | ● | ● | | | | | | |
| – | – | ● | ● | ● | ● | ● | ● | ● | ● | | | | | | |
| – | – | – | – | ● | ● | ● | ● | ● | ● | | | | | | |
| ● | ● | ● | ● | ● | ● | ● | ● | ● | ● | | | | | | |
| – | – | – | – | ● | ● | ● | ● | ● | ● | | | | | | |
| – | – | ● | ● | ● | ● | ● | ● | ● | ● | | | | | | |
| ● | ● | ● | ● | ● | ● | ● | ● | ● | ● | | | | | | |
| – | – | – | – | ● | ● | ● | ● | | | | | | | | |
| | | | | | | | | – | – | | | | | | |
| | | | | | | | | ● | ● | | | | | | |
| ● | ● | ● | ● | ● | ● | ● | ● | ● | ● | | | | | | |
| ● | ● | ● | ● | ● | ● | ● | ● | ● | ● | | | | | | |
| – | – | – | – | ● | ● | ● | ● | ● | ● | | | | | | |
| – | – | – | – | ● | ● | ● | ● | ● | ● | | | | | | |
| – | – | – | – | ◇ | ◇ | ◇ | ◇ | ◇ | ◇ | ● | ● | – | – | – | – |
| – | – | – | – | ● | ● | ● | ● | ● | ● | | | | | | |

● Basic version
○ Option
◇ Function is dependent on operating software
– Not possible

Order No.

## CNC programming: Language (continued)

| | |
|---|---|
| Online ISO dialect interpreter | **6FC5 253-0AE00-0AA0** |
| Program management | |
| • Management of programs and workpieces in NCK | |
| • Management of programs and workpieces on hard disk (HD) | |
| • Management of programs and workpieces on diskette drive | |
| • Management of programs and workpieces on network drive | |
| • Max. number of workpieces on NC/NC + HD | |
| • Templates for workpieces, programs and INI files | |
| • Job lists | |

## CNC programming: Cycles

| | |
|---|---|
| Process-oriented cycles for drilling/milling and turning | See HMI Software |
| Pocket milling with free contour definition and islands | See HMI Software |
| NCU 561.4 | |
| NCU 571.4/NCU 572.4/NCU 573.4/NCU 573.5 | |
| Pocket milling with free contour definition, islands and residual material removal | See HMI Software |
| NCU 561.4 | |
| NCU 571.4/NCU 572.4/NCU 573.4/NCU 573.5 | |
| Enhanced stock removal functions with blank part description | See HMI Software |
| NCU 561.4 | |
| NCU 571.4/NCU 572.4/NCU 573.4/NCU 573.5 | |
| Enhanced stock removal functions with blank part description and residual material removal | See HMI Software |
| NCU 561.4 | |
| NCU 571.4/NCU 572.4/NCU 573.4/NCU 573.5 | |
| Measuring cycles for drilling/milling and turning | See HMI Software |
| Access protection for cycles | |
| Cycle storage separate from CNC main memory | **6FC5 251-0AF00-0AA0** |

1) Management of workpieces is not possible.
2) Requirement: DNC (option).
3) With different functionality.
4) Partially.

| SINUMERIK 802 | | | | SINUMERIK 810D powerline/840Di/840D powerline | | | | | | | | | | | |
|---|---|---|---|---|---|---|---|---|---|---|---|---|---|---|---|
| 802S base line | 802C base line | 802D base line | 802D | 810DE power-line | 810D power-line | 840DiE | 840Di | 840DE power-line | 840D power-line | Note on operating software<br>Blank field: Function is not dependent on operating software<br>HMI Ad-van-ced | HMI Em-bed-ded | Shop Mill | Manual Turn | Shop Turn | HT 6 |
| – | – | – | ● | ○ | ○ | ○ | ○ | ○ | ○ | | | | | | |
| ● 1) | ● 1) | ● 1) | ● 1) | ● | ● | ● | ● | ● | ● | ● | ● | ● | ● | ● | ● |
| – | – | – | – | ◇ | ◇ | ● | ● | ◇ | ◇ | ● | – | ● | – | ● | – |
| – | – | – | – | ◇ | ◇ | ◇ | ◇ | ◇ | ◇ | ● | ○ | ○ | – | ○ | – |
| – | – | – | – | ◇ | ◇ | ◇ | ◇ | ◇ | ◇ | ○ 2) | ○ | ○ | – | ○ | – |
| 100/– | 100/– | 100/– | 100/– | 250/– | 250/– | 310 | 310 | 250/– | 250/– | –/310 | – | –/310 | –/310 | –/310 | – |
| – | – | – | – | ◇ | ◇ | ◇ | ◇ | ◇ | ◇ | ● | – | – | – | – | – |
| – | – | – | – | ◇ | ◇ | ◇ | ◇ | ◇ | ◇ | ● | – | – | – | – | – |
| ● | ● | ● | ● | ◇ | ◇ | ◇ | ◇ | ◇ | ◇ | ● | ○ | ● | ● 3) | ● | – |
| – | – | – | – | ◇ | ◇ | ◇ | ◇ | | | ○ | – | ● | – | ● | – |
| | | | | | | | | – | – | | | | | | |
| | | | | | | | | ◇ | ◇ | | | | | | |
| – | – | – | – | ◇ | ◇ | ◇ | ◇ | | | ○ | – | ○ | – | ○ | – |
| | | | | | | | | – | – | | | | | | |
| | | | | | | | | ◇ | ◇ | | | | | | |
| – | – | – | – | ◇ | ◇ | ◇ | ◇ | | | ○ | – | – | ○ | ● | – |
| | | | | | | | | – | – | | | | | | |
| | | | | | | | | ◇ | ◇ | | | | | | |
| – | – | – | – | ○ | ○ | ○ | ○ | | | ○ | – | – | ○ | ○ | – |
| | | | | | | | | – | – | | | | | | |
| | | | | | | | | ○ | ○ | | | | | | |
| – | – | – | – | ○ | ○ | ○ | ○ | ○ | ○ | ○ | ○ | ● 4) | – | ● 4) | – |
| ● | ● | ● | ● | ● | ● | ● | ● | ● | ● | | – | | | | |
| – | – | – | – | ○ | ○ | ○ | ○ | ○ | ○ | | | | | | |

1

● Basic version
○ Option
◇ Function is dependent on operating software
– Not possible

| | Order No. |
|---|---|
| **CNC programming: Program support** | |
| Program editor | |
| • Text editor with editing functions: Marking, copying, deleting, ... | |
| • Machining step programming | See HMI Software |
| • Write protection for lines | |
| • Suppression of lines in the display | |
| • Dual editor | |
| • Multi-channel sequence programming | **6FC5 253-0AF03-0AA0** |
| AutoTurn/AutoTurn Plus | See HMI Software |
| Program support for geometry entries | |
| • Geometry processor with programming graphics/ Free contour input (contour calculator) | See HMI Software |
| • Screens for 1/2/3-point contours | |
| Program support for cycles | |
| • Screens and stationary auxiliary displays | |
| • Dynamic programming graphics during programming | |
| • Programming support expandable (e. g. customer cycles) | |
| **Parameter** | |
| Max. number of basic frames | |
| Max. number of selectable offsets | |
| Work offsets, programmable (frames) | |
| Scratching, determining work offset | |
| Work offsets, external (PLC) | |
| Global and local user data | |
| Global program user data | |
| Display system variables (also via online configurable display) and log them | |

1) Configurable by Siemens.
2) For presentation of the machining step.
3) With "Expand user interface", see HMI/MMC start-up instructions.
4) With "Customer cycles" function.

| SINUMERIK 802 | | | | SINUMERIK 810D powerline/840Di/840D powerline | | | | | | Note on operating software<br>Blank field: Function is not dependent on operating software | | | | | |
|---|---|---|---|---|---|---|---|---|---|---|---|---|---|---|---|
| 802S base line | 802C base line | 802D base line | 802D | 810DE power-line | 810D power-line | 840DiE | 840Di | 840DE power-line | 840D power-line | HMI Ad-van-ced | HMI Em-bed-ded | Shop Mill | Manual Turn | Shop Turn | HT 6 |
| ● | ● | ● | ● | ◇ | ◇ | ● | ● | ◇ | ◇ | ● | ● | ● | ● | ● | ● |
| – | – | – | – | ◇ | ◇ | ◇ | ◇ | ◇ | ◇ | – | – | ○ | ● | ○ | – |
| – | – | – | – | ◇ | ◇ | ◇ | ◇ | ◇ | ◇ | ● | – | ● | – | ● | – |
| – | – | – | – | ◇ | ◇ | ◇ | ◇ | ◇ | ◇ | ● | – | ● 2) | – | ● | – |
| – | – | – | – | ◇ | ◇ | ◇ | ◇ | ◇ | ◇ | ● | ● | – | – | – | – |
| – | – | – | – | ◇ | ◇ | – | – | ◇ | ◇ | ○ | – | – | – | – | – |
| – | – | – | – | ◇ | ◇ | – | – | ◇ | ◇ | ○ | – | – | – | – | – |
| – | – | – | – | ◇ | ◇ | ◇ | ◇ | ◇ | ◇ | ● | ● | ● | ○ | ● | – |
| ● | ● | ● | ● | ◇ | ◇ | ◇ | ◇ | ◇ | ◇ | ● | ● | ● | – | ● | ● |
| ● | ● | ● | ● | ◇ | ◇ | ◇ | ◇ | ◇ | ◇ | ● | ● | ● | ● | ● | – |
| – | – | – | – | ◇ | ◇ | ◇ | ◇ | ◇ | ◇ | – | – | ● | ● | ● | – |
| 1) | 1) | 1) | 1) | ◇ | ◇ | ◇ | ◇ | ◇ | ◇ | ● 3) | ● 3) | ● 3) | ● 4) | ● 3) | ● |

| | | | | | | | | | | | | | | | |
|---|---|---|---|---|---|---|---|---|---|---|---|---|---|---|---|
| 1 | 1 | 1 | 1 | 16 | 16 | ◇ | ◇ | 16 | 16 | 16 | 16 | 1 | 1 | 1 | – |
| 4 | 4 | 6 | 6 | 100 | 100 | ◇ | ◇ | 100 | 100 | 100 | 100 | 100 | 4 | 100 | 100 |
| 1 | 1 | ● | ● | ● | ● | ● | ● | ● | ● | | | | | | |
| ● | ● | ● | ● | ◇ | ◇ | ◇ | ◇ | ◇ | ◇ | ● | ● | ● | ● | ● | – |
| – | – | – | – | ● | ● | ● | ● | ● | ● | ● | ● | ● | ● | ● | – |
| – | – | – | – | ● | ● | ◇ | ◇ | ● | ● | ● | – | ● | – | ● | ● |
| – | – | – | – | ● | ● | ◇ | ◇ | ● | ● | ● | ● | ● | – | ● | ● |
| – | – | – | – | ◇ | ◇ | ◇ | ◇ | ◇ | ◇ | ● | – | – | – | – | – |

● Basic version
○ Option
◇ Function is dependent on operating software
– Not possible

| | Order No. |
|---|---|
| **Simulation** | |
| Up to n channels can be simulated sequentially | |
| NCU 561.4 | |
| NCU 571.4 | |
| NCU 572.4/NCU 573.4/NCU 573.5 | |
| Several channels and programs can machine the same blank part in succession | |
| Simulation of program X, while program Y is executed | |
| Drilling/milling [1] | |
| • Multi-sided 2D view, dynamic | |
| • 3D view, static | |
| • Simultaneous recording (real-time simulation of current machining) | See HMI Software |
| Turning [1] | |
| • Traverse path simulation without model (broken-line graphics) | |
| • Contour of blank part can be specified | |
| • Simulation in working plane G18 | |
| • Simulation in working planes G17/G19 | |
| • Full cut/partial cut with circumferential edges, front face and peripheral surfaces, milling and drilling operations | |
| • Counterspindle | |
| • 3D simulation of the finished part (static/dynamic) | See HMI Software |
| • Simultaneous recording (real-time simulation of current machining) | |
| Turning [1] | **6FC5 673-0AB01-0AF0** |
| • Traverse path simulation without model (broken-line graphics) | |
| • Simulation in working plane G18 | |
| • Simultaneous recording (real-time simulation of current machining) | |
| **Operating modes** | |
| JOG | |
| • Handwheel selection | |
| • Inch/metric changeover | |
| • Safety Integrated user confirmation | |
| • Manual measurement of work offset | |
| • Manual measurement of tool compensation | |
| • Automatic tool/workpiece measurement | See HMI Software |
| • Reference point approach, automatic/via CNC program | |

1) Toolholder vertical to the workpiece.
2) Single-sided broken-line graphics at programming level.
3) Dynamic for PCU 50/PCU 70.
4) Requirement: Measurement cycles.

| SINUMERIK 802 | | | | SINUMERIK 810D powerline/840Di/840D powerline | | | | | | | | | | | |
|---|---|---|---|---|---|---|---|---|---|---|---|---|---|---|---|
| 802S base line | 802C base line | 802D base line | 802D | 810DE power-line | 810D power-line | 840DiE | 840Di | 840DE power-line | 840D power-line | Note on operating software<br>Blank field: Function is not dependent on operating software<br>HMI Ad-van-ced | HMI Em-bed-ded | Shop Mill | Manual Turn | Shop Turn | HT 6 |
| – | – | – | – | 2 | 2 | 2 | 2 | | | 10 | 1 | 1 | 1 | 1 | – |
| | | | | | | | | 2 | 2 | | | | | | |
| | | | | | | | | 6 | 6 | | | | | | |
| | | | | | | | | 10 | 10 | | | | | | |
| – | – | – | – | ◇ | ◇ | ◇ | ◇ | ◇ | ◇ | ● | – | – | – | – | – |
| – | – | – | – | ◇ | ◇ | ◇ | ◇ | ◇ | ◇ | ● | – | – | – | – | – |
| – | – | – | ● 2) | ◇ | ◇ | ◇ | ◇ | ◇ | ◇ | ● | – | ● | – | – | – |
| – | – | – | – | ◇ | ◇ | ◇ | ◇ | ◇ | ◇ | ● | – | ● | – | – | – |
| – | – | – | ● 2) | ◇ | ◇ | ◇ | ◇ | ◇ | ◇ | – | ○ | ○ | – | – | – |
| – | – | – | – | ◇ | ◇ | ◇ | ◇ | ◇ | ◇ | ● | ● | – | ● 5) | – | – |
| – | – | – | – | ◇ | ◇ | ◇ | ◇ | ◇ | ◇ | ● | – | – | ● | – | – |
| – | – | – | – | ◇ | ◇ | ◇ | ◇ | ◇ | ◇ | ● | ● | – | ● | ● | – |
| – | – | – | – | ◇ | ◇ | ◇ | ◇ | ◇ | ◇ | ● | – | – | – | ● | – |
| – | – | – | – | ◇ | ◇ | ◇ | ◇ | ◇ | ◇ | ● | – | – | – | ● | – |
| – | – | – | – | ◇ | ◇ | ◇ | ◇ | ◇ | ◇ | ● | – | – | – | ● | – |
| – | – | – | – | ◇ | ◇ | – | – | ◇ | ◇ | – | – | – | – | ○ 3) | – |
| – | – | – | – | ◇ | ◇ | ◇ | ◇ | ◇ | ◇ | – | ● | – | ● | ○ | – |
| – | – | ○ 2) | ● 2) | – | – | – | – | – | – | – | – | – | – | – | – |
| – | – | ○ 2) | ● 2) | – | – | – | – | – | – | – | – | – | – | – | – |
| – | – | ○ 2) | ● 2) | – | – | – | – | – | – | – | – | – | – | – | – |
| ● | ● | ● | ● | ● | ● | ● | ● | ● | ● | ● | ● | | | | ● |
| ● | ● | ● | ● | ● | ● | ◇ | ◇ | ● | ● | ● | ● | – | – | – | – |
| – | – | ● | ● | ● | ● | ◇ | ◇ | ● | ● | ● | ● | ● | ● | ● | – |
| – | – | – | – | – | – | – | – | ● | ● | ● | ● | ● | – | ● | – |
| ● | ● | ● | ● | ◇ | ◇ | ◇ | ◇ | ◇ | ◇ | ● | ● | ● | ● | ● | – |
| ● | ● | ● | ● | ◇ | ◇ | ◇ | ◇ | ◇ | ◇ | – | – | ● | ● | ● | – |
| – | – | ● | ● | ● | ● | ◇ | ◇ | ● | ● | ○ 4) | – | ● | – | ● | – |
| ● | ● | ● | ● | ● | ● | ● | ● | ● | ● | ● | ● | ● | ● | ● | ● |

5) Only turning.

● Basic version
○ Option
◇ Function is dependent on operating software
– Not possible

| | Order No. |
|---|---|
| **Operating modes** (continued) | |
| MDA | |
| • Input in text editor | |
| • Save MDA program | |
| • Input screen forms for technology and positioning, cycle support | |
| Teach In | |
| • Teach positions in MDA buffer | |
| • Teach (record/playback) | |
| • Teach In with HT 6 | |
| Teach In | **6FC5 571-0AA01-0BF0** |
| Automatic | |
| • Execution from network drive or PC card for PCU 20 | See HMI Software |
| • Execution from V.24 (RS 232 C) interface | |
| • Execution from hard disk | |
| • Program control | |
| • Program editing: | |
| • Overstoring | |
| • DRF offset | |
| • Block search with/without calculation | |
| Repos (repositioning on the contour) | |
| • With operator command/semi-automatically | |
| • Program-controlled | |
| Preset | |
| Set actual value | |
| **Tools** | |
| Tool types | |
| • Turning | |
| • Drilling/milling | |
| • Grinding | |
| • Groove sawing | |

1) Requirement: DNC (option).
2) Possible with restrictions.
3) Requirement: Management of network and diskette drive on PCU 20 (option).

| SINUMERIK 802 | | | | SINUMERIK 810D powerline/840Di/840D powerline | | | | | | | | | | | |
|---|---|---|---|---|---|---|---|---|---|---|---|---|---|---|---|
| 802S base line | 802C base line | 802D base line | 802D | 810DE power-line | 810D power-line | 840DiE | 840Di | 840DE power-line | 840D power-line | Note on operating software<br>Blank field: Function is not dependent on operating software<br>HMI Ad-van-ced | HMI Em-bed-ded | Shop Mill | Manual Turn | Shop Turn | HT 6 |
| ● | ● | ● | ● | ● | ● | ◇ | ◇ | ● | ● | ● | ● | | | | ● |
| ● | ● | ● | ● | ● | ● | ◇ | ◇ | ● | ● | ● | ● | ● | – | ● | ● |
| – | – | – | – | ● | ● | ◇ | ◇ | ● | ● | ● | ● | – | – | – | ● |
| – | – | – | – | ● | ● | ◇ | ◇ | ● | ● | – | – | ● | ● | ● | – |
| – | – | – | – | ● | ● | ◇ | ◇ | ● | ● | | | | | | |
| – | – | – | – | ● | ● | ◇ | ◇ | ● | ● | ● | ● | – | – | – | ● |
| – | – | – | – | ● | ● | – | – | ● | ● | – | – | – | ● | – | – |
| – | – | – | – | ○ | ○ | ○ | ○ | ○ | ○ | – | – | – | – | – | ● |
| ○ | ○ | – | – | – | – | – | – | – | – | | | | | | |
| ● | ● | ● | ● | ● | ● | ● | ● | ● | ● | ● | ● | | | | ● |
| – | – | – | – | ● | ● | ◇ | ◇ | ● | ● | ○ 1) | ○ 3) | ○ | – | ○ | – |
| ● | ● | ● | ● | ● | ● | ◇ | ◇ | ● | ● | ● | ● | ● | – | ● | – |
| – | – | – | – | ● | ● | ◇ | ◇ | ● | ● | ● | – | ● | – | ● | – |
| ● | ● | ● | ● | ● | ● | ◇ | ◇ | ● | ● | ● | ● | ● | ● 2) | ● | ● |
| ● | ● | ● | ● | ● | ● | ◇ | ◇ | ● | ● | ● | ● | ● | – | ● | ● |
| – | – | – | – | ● | ● | ◇ | ◇ | ● | ● | ● | ● | – | – | – | ● |
| – | – | – | – | ● | ● | ◇ | ◇ | ● | ● | ● | ● | ● | ● | ● | ● |
| ● | ● | ● | ● | ● | ● | ◇ | ◇ | ● | ● | ● | ● | ● | ●/– | ● | ● |
| ● | ● | ● | ● | ● | ● | ◇ | ◇ | ● | ● | ● | ● | ● | ● | ● | – |
| – | – | – | – | ● | ● | ◇ | ◇ | ● | ● | ● | ● | ● | ● | ● | – |
| – | – | – | – | ● | ● | ◇ | ◇ | ● | ● | ● | ● | ● | ● | ● | – |
| – | – | – | – | ● | ● | ◇ | ◇ | ● | ● | ● | ● | ● | ● | ● | – |
| ● | ● | ● | ● | ● | ● | ◇ | ◇ | ● | ● | ● | ● | – | ● | ● | ● |
| ● | ● | ●/– | ● | ● | ● | ◇ | ◇ | ● | ● | ● | ● | ● | ● | ● | ● |
| – | – | – | – | ● | ● | ◇ | ◇ | ● | ● | ● | ● | – | – | – | ● |
| – | – | – | – | ● | ● | ◇ | ◇ | ● | ● | ● | ● | – | – | – | ● |

1

● Basic version
○ Option
◇ Function is dependent on operating software
– Not possible

Order No.

## Tools (continued)

| | |
|---|---|
| Tool radius compensations in plane | |
| • With approach and retract strategies | |
| NCU 561.4 | |
| NCU 571.4/NCU 572.4/NCU 573.4/NCU 573.5 | |
| • With transition circle/ellipse on outer edges | |
| NCU 561.4 | |
| NCU 571.4/NCU 572.4/NCU 573.4/NCU 573.5 | |
| Configurable intermediate blocks with tool radius compensation active | |
| NCU 561.4 | |
| NCU 571.4/NCU 572.4/NCU 573.4/NCU 573.5 | |
| 3D tool radius compensation | **6FC5 251-0AB13-0AA0** |
| NCU 561.4 | |
| NCU 571.4/NCU 572.4/NCU 573.4/NCU 573.5 | |
| Tool change via T number | |
| Tool holder with orientation capability | |
| NCU 561.4 | |
| NCU 571.4/NCU 572.4/NCU 573.4/NCU 573.5 | |
| Look-ahead detection of contour violations | |
| NCU 561.4 | |
| NCU 571.4/NCU 572.4/NCU 573.4/NCU 573.5 | |
| Grinding-specific tool compensation with grinding wheel surface speed | |
| NCU 561.4 | |
| NCU 571.4/NCU 572.4/NCU 573.4/NCU 573.5 | |
| Tool orientation interpolation [1)] | |
| Online tool length compensation | |
| Operation without tool management | |
| • Tool compensation selection via D number without T assignment (flat D number) | |
| • Editing of tool data | |
| • Tool compensation selection via T and D numbers | |
| • Data backup via V.24 (RS 232 C) interface | |
| • Number of tools/cutting edges in tool list | |

1) Requirement: Machining package for 5 axes (option).
2) Available soon.

| SINUMERIK 802 | | | | SINUMERIK 810D powerline/840Di/840D powerline | | | | | | Note on operating software<br>Blank field: Function is not dependent on operating software | | | | | |
|---|---|---|---|---|---|---|---|---|---|---|---|---|---|---|---|
| 802S base line | 802C base line | 802D base line | 802D | 810DE power-line | 810D power-line | 840DiE | 840Di | 840DE power-line | 840D power-line | HMI Ad-van-ced | HMI Em-bed-ded | Shop Mill | Manual Turn | Shop Turn | HT 6 |
| – | – | – | – | ● | ● | ● | ● | | | | | | | | |
| | | | | | | | | – | – | | | | | | |
| | | | | | | | | ● | ● | | | | | | |
| ● | ● | ● | ● | ● | ● | ● | ● | | | | | | | | |
| | | | | | | | | – | – | | | | | | |
| | | | | | | | | ● | ● | | | | | | |
| – | – | – | – | ● | ● | ● | ● | | | | | | | | |
| | | | | | | | | – | – | | | | | | |
| | | | | | | | | ● | ● | | | | | | |
| – | – | – | – | – | – | ○ | ○ | | | ● | ● | ● | – | – | – |
| | | | | | | | | – | – | | | | | | |
| | | | | | | | | ○ | ○ | | | | | | |
| ● | ● | ● | ● | ● | ● | ● | ● | ● | ● | ● | ● | ● | ● | ● | – |
| – | – | – | – | ● | ● | ● | ● | | | ● | ● | ● | – | – | – |
| | | | | | | | | – | – | | | | | | |
| | | | | | | | | ● | ● | | | | | | |
| ● | ● | ● | ● | ● | ● | ● | ● | | | | | | | | |
| | | | | | | | | – | – | | | | | | |
| | | | | | | | | ● | ● | | | | | | |
| – | – | – | – | ● | ● | ● | ● | | | ● | ● | – | – | – | – |
| | | | | | | | | – | – | | | | | | |
| | | | | | | | | ● | ● | | | | | | |
| – | – | – | – | – | – | – | ● | – | ● | | | | | | |
| – | – | – | – | – | – | – | – | ● | ● | | | | | | |
| ● | ● | ● | ● | ● | ● | ◇ | ◇ | ● | ● | ● | ● | – | ● | 2) | ● |
| – | – | – | – | ● | ● | ◇ | ◇ | ● | ● | ● | ● | – | – | – | ● |
| ● | ● | ● | ● | ● | ● | ◇ | ◇ | ● | ● | ● | – | – | – | – | ● |
| ● | ● | ● | ● | ● | ● | ◇ | ◇ | ● | ● | ● | ● | ● | – | ● | – |
| ● | ● | ● | ● | – | – | – | – | – | – | – | – | – | – | – | – |
| 15/30 | 15/30 | 32/64 | 3) | 600/ 1500 | 600/ 1500 | 600/ 1500 ◇ | 600/ 1500 ◇ | 600/ 1500 | 600/ 1500 | | | – | – | – | |

3) For turning 32/64. For milling 48/96.

● Basic version
○ Option
◇ Function is dependent on operating software
– Not possible

Order No.

## Tools (continued)

| | |
|---|---|
| Operation with tool management | **6FC5 251-0AB12-0AA0** |
| • System displays in standard software | |
| • Easy start-up via system displays | |
| • Tool list | |
| • Configurable tool lists | |
| • Number of tools/cutting edges in tool list | |
| • Unambiguous D number structure | |
| • Tool compensation selection via T and D numbers | |
| • Editing of tool data | |
| • Editing of OA data | |
| • Magazine list | |
| • Configurable magazine list | |
| • More than one magazine is possible | |
| • Magazine data | |
| • Vacant position search and positioning | |
| • Easy vacant position search using softkeys | |
| • Loading and unloading of tools | |
| • More than one loading and unloading point per magazine | |
| • Tool cabinet and tool catalog | |
| • Loading and unloading via code carrier system | |
| • Adapter data | |
| • Local offsets | |
| • Connection to TDI | |
| • Data backup on hard disk | |
| • Data backup via V.24 (RS 232 C) interface | |
| Monitoring of tool life and workpiece count | **6FC5 651-0AA01-0AA0** |

1) Valid for PCU 50/PCU 70. For PCU 20: 250/500.
2) Available soon.
3) Available with PCU 50.

| SINUMERIK 802 | | | | SINUMERIK 810D powerline/840Di/840D powerline | | | | | | Note on operating software<br>Blank field: Function is not dependent on operating software | | | | | |
|---|---|---|---|---|---|---|---|---|---|---|---|---|---|---|---|
| 802S base line | 802C base line | 802D base line | 802D | 810DE power-line | 810D power-line | 840DiE | 840Di | 840DE power-line | 840D power-line | HMI Ad-van-ced | HMI Em-bed-ded | Shop Mill | Man-ual Turn | Shop Turn | HT 6 |
| – | – | – | – | ○ | ○ | ◇ | ◇ | ○ | ○ | ○ | ○ | ● | – | ● | – |
| – | – | – | – | ○ | ○ | ◇ | ◇ | ○ | ○ | ○ | ○ | ● | – | ● | – |
| – | – | – | – | ○ | ○ | ◇ | ◇ | ○ | ○ | ○ | – | 3) | – | 3) | – |
| – | – | – | – | ○ | ○ | ○ | ○ | ○ | ○ | ○ | ○ | ● | – | ● | – |
| – | – | – | – | ○ | ○ | ○ | ○ | ○ | ○ | ○ | – | – | – | – | – |
| – | – | – | – | 600/ 1500 | 600/ 1500 | 600/ 1500 ◇ | 600/ 1500 ◇ | 600/ 1500 | 600/ 1500 | 600/ 1500 | 600/ 1500 | 600/ 1200 1) | 100/ 1 | 600/ 1200 1) | – |
| – | – | – | – | ○ | ○ | ◇ | ◇ | ○ | ○ | ○ | – | – | – | – | – |
| – | – | – | – | ● | ● | ● | ● | ● | ● | ● | ● | ● | – | ● | – |
| – | – | – | – | ○ | ○ | ◇ | ◇ | ○ | ○ | ○ | ○ | ● | – | ● | – |
| – | – | – | – | ○ | ○ | ◇ | ◇ | ○ | ○ | ○ | ○ | 2) | – | 2) | – |
| – | – | – | – | ○ | ○ | ◇ | ◇ | ○ | ○ | ○ | ○ | ● | – | ● | – |
| – | – | – | – | ○ | ○ | ◇ | ◇ | ○ | ○ | ○ | – | – | – | – | – |
| – | – | – | – | 32 | 32 | 32 | 32 | 32 | 32 | 32 | 32 | 3 | – | 3 | – |
| – | – | – | – | ○ | ○ | ◇ | ◇ | ○ | ○ | ○ | ○ | ● | – | ● | – |
| – | – | – | – | ○ | ○ | ◇ | ◇ | ○ | ○ | ○ | ○ | ● | – | ● | – |
| – | – | – | – | ○ | ○ | ◇ | ◇ | ○ | ○ | ○ | – | – | – | – | – |
| – | – | – | – | ○ | ○ | ◇ | ◇ | ○ | ○ | ○ | ○ | ● | – | ● | – |
| – | – | – | – | ○ | ○ | ◇ | ◇ | ○ | ○ | ○ | – | – | – | – | – |
| – | – | – | – | ○ | ○ | ◇ | ◇ | ○ | ○ | ○ | – | – | – | – | – |
| – | – | – | – | ○ | ○ | ◇ | ◇ | ○ | ○ | ○ | – | – | – | – | – |
| – | – | – | – | ○ | ○ | ◇ | ◇ | ○ | ○ | ○ | – | – | – | – | – |
| – | – | – | – | ○ | ○ | ◇ | ◇ | ○ | ○ | ○ | – | – | – | – | – |
| – | – | – | – | ○ | ○ | ◇ | ◇ | ○ | ○ | ○ | – | ● | – | ● | – |
| – | – | – | – | ○ | ○ | ◇ | ◇ | ○ | ○ | ○ | – | ● | – | ● | – |
| – | – | – | – | ○ | ○ | ◇ | ◇ | ○ | ○ | ○ | ○ | ● | – | ● | – |
| – | – | – | ○ | – | – | – | – | – | – | | | | | | |

1

● Basic version
○ Option
◇ Function is dependent on operating software
– Not possible

| | Order No. |
|---|---|
| **Communication** | |
| Serial interface V.24 (RS 232 C) | |
| Secure data transfer (Z modem) | |
| Parallel interface (Centronics) | |
| Diskette drive operation | See HMI Software |
| Multipoint interface (MPI) | |
| Ethernet connections | See HMI Software |
| Interfacing to I/O via PROFIBUS DP [1] (software option) | **6FC5 252-0AD00-0AA0** |
| Data interchange between machining channels | |
| High-speed data interchange between CNC and PLC | |
| Data backup on hard disk | |
| Data backup on PC card | |
| PC card as additional program memory (PCU 20) | |
| **ePS Network Services** | |
| eP Access | See HMI Software |
| eP Dynamic | See HMI Software |
| eP Performance | See HMI Software |
| **Motion Control Information System MCIS** | |
| DNC Machine/IFC: CNC program transfer via the network | See HMI Software |
| TDI: Tool management function for individual machines and networked machines | See HMI Software |
| TDI Ident Connection: Connection to tool identification systems | See HMI Software |
| MDA Machine/IFC: Machine and production data acquisition | See HMI Software |
| RPC SINUMERIK: Data interchange between CNC and host computer | See HMI Software |
| TPM Machine: Support for maintenance and repair | See HMI Software |
| RCS@Event | See HMI Software |

1) For literature on the subject of PROFIBUS DP, see Services.
2) For PCU 50/PCU 70.
3) Requirement: DNC (option).

| SINUMERIK 802 | | | | SINUMERIK 810D powerline/840Di/840D powerline | | | | | | Note on operating software<br>Blank field: Function is not dependent on operating software | | | | | |
|---|---|---|---|---|---|---|---|---|---|---|---|---|---|---|---|
| 802S base line | 802C base line | 802D base line | 802D | 810DE power-line | 810D power-line | 840DiE | 840Di | 840DE power-line | 840D power-line | HMI Ad-van-ced | HMI Em-bed-ded | Shop Mill | Manual Turn | Shop Turn | HT 6 |
| ● | ● | ● | ● | ◇ | ◇ | ● | ● | ◇ | ◇ | ● | ● | ● | ● | ● | ● |
| – | – | – | – | ◇ | ◇ | ◇ | ◇ | ◇ | ◇ | ● | 5) | 5) | – | 5) | – |
| – | – | – | – | ◇ | ◇ | ● | ● | ◇ | ◇ | ● | – | ● 2) | ● 2) | ● 2) | – |
| – | – | – | – | ◇ | ◇ | ● | ● | ◇ | ◇ | ● | ○ | ○ | – | ○ | – |
| – | – | – | – | ● | ● | ● | ● | ● | ● | ● | ● | ● | ● | ● | ● |
| – | – | – | – | ◇ | ◇ | ● | ● | ◇ | ◇ | ○ 3) | ○ | ○ | – | ○ | – |
| – | – | ● | ● | ○ | ○ | ● | ● | ○ | ○ | | | | | | |
| – | – | – | – | ● | ● | ● | ● | ● | ● | | | | – | – | |
| – | – | – | – | ● | ● | ● | ● | ● | ● | | | | | | |
| – | – | – | – | ◇ | ◇ | ● | ● | ◇ | ◇ | ● | – | ● 5) 2) | ● 2) | ● 2) | – |
| – | – | ● | ● | ● | ● | – | – | ● | ● | ● | ● | ● | ● | ● | ● |
| – | – | – | – | ◇ | ◇ | – | – | ◇ | ◇ | – | ● 4) | – | – | – | – |
| – | – | – | – | ○ | ○ | ○ | ○ | ○ | ○ | ○ 6) | – | ○ 6) | ○ 6) | ○ 6) | – |
| – | – | – | – | ○ | ○ | ○ | ○ | ○ | ○ | ○ 6) | – | ○ 6) | ○ 6) | ○ 6) | – |
| – | – | – | – | ○ 7) | ○ 7) | ○ 7) | ○ 7) | ○ 7) | ○ 7) | ○ 6) | – | ○ 6) | ○ 6) | ○ 6) | – |
| – | – | – | – | ◇ | ◇ | ◇ | ◇ | ◇ | ◇ | ○ | – | ○ 2) | ○ 2) | ○ 2) | – |
| – | – | – | – | ◇ | ◇ | ◇ | ◇ | ◇ | ◇ | ○ | – | ○ 2) | – | – | – |
| – | – | – | – | ◇ | ◇ | ◇ | ◇ | ◇ | ◇ | ○ | – | – | – | – | – |
| – | – | – | – | ◇ | ◇ | ◇ | ◇ | ◇ | ◇ | ○ | – | ○ 2) | ○ 2) | ○ 2) | – |
| – | – | – | – | ◇ | ◇ | ◇ | ◇ | ◇ | ◇ | ○ | – | – | – | – | – |
| – | – | – | – | ◇ | ◇ | ◇ | ◇ | ◇ | ◇ | ○ | – | – | – | – | – |
| – | – | – | – | ◇ | ◇ | ◇ | ◇ | ◇ | ◇ | ○ | – | ○ 2) | ○ 2) | ○ 2) | – |

4) HMI Embedded SW Version 6.2. and higher.
Remote diagnostics on PC card is not possible.
Requirement: Management of network/diskette drive on PCU 20 (option).

5) Available soon.
6) For PCU 50/PCU 70 with HMI-Advanced, SW Version 6.0 and higher.
7) On request.

● Basic version
○ Option
◇ Function is dependent on operating software
– Not possible

| | Order No. |
|---|---|
| **Data management** | |
| A&D DataManagement: Data management system (requirement: SIMATIC STEP 7) | See HMI Software |
| **Tool identification system** | |
| Connection of tool identification system MOBY E | See HMI Software |
| **Operation** | |
| Operator panel fronts OP 015/OP 015A/TP 015A, 15" color | See Operator Components |
| Operator panel fronts OP 012, 12.1" color | See Operator Components |
| Operator panel fronts TP 012, 12.1" color [3] | See Operator Components |
| Operator panel fronts OP 010/OP 010C/OP 010S, 10.4" color | See Operator Components |
| PCU 20 [2] | See Operator Components |
| PCU 50 [2] | See Operator Components |
| PCU 70 [2] | See Operator Components |
| Physical separation of operator panel front (OP) and PCU as well as connection of up to 3 operator panels of the same type | |
| 1 operator panel for up to 8 NCUs/ 2 operator panels for up to 4 NCUs | |
| Control unit management for each PCU (up to 9 PCUs for up to 9 NCUs) Functionality: Active, passive and displacement mechanisms | **6FC5 253-0AE03-0AA0** |
| Integrated operator panel: SINUMERIK 802S/802C base line, 8" monochrome | See Basic Components |
| Operator panel SINUMERIK 802D base line/802D, 10.4" monochrome/color | See Basic Components |
| Slimline operator panel OP 030 with system software | See Operator Components |
| Connections for OP7/OP17 operator panel | |
| Connection of SIMATIC HMI to PLC | |
| Connection of SIMATIC Panels OP 170/TP 170/OP 270/TP 270 to SINUMERIK with ProTool | |
| SINUMERIK HT 6 handheld terminal | See Operator Components |
| Mini handheld unit | See Operator Components |
| B-MPI handheld unit | See Operator Components |
| Machine control panel | See Operator Components |
| Pushbutton panel | See Operator Components |
| Electronic handwheels can be connected | See Operator Components |

1) Three CCUs on one operator panel. Two operator panels on one CCU.
2) HMI software for PC/PG can be ordered separately.
3) For customized operator interface.
4) Third handwheel can be operated as a contour handwheel.
5) Requirement: MCI board extension.

| SINUMERIK 802 | | | | SINUMERIK 810D powerline/840Di/840D powerline | | | | | | Note on operating software<br>Blank field: Function is not dependent on operating software | | | | | |
|---|---|---|---|---|---|---|---|---|---|---|---|---|---|---|---|
| 802S base line | 802C base line | 802D base line | 802D | 810DE power-line | 810D power-line | 840DiE | 840Di | 840DE power-line | 840D power-line | HMI Ad-van-ced | HMI Em-bed-ded | Shop Mill | Manual Turn | Shop Turn | HT 6 |
| – | – | – | – | ◇ | ◇ | ◇ | ◇ | ◇ | ◇ | ○ | – | | | | – |
| – | – | – | – | ◇ | ◇ | – | – | ◇ | ◇ | ○ | | | | | |
| – | – | – | – | ○ | ○ | ○ | ○ | ○ | ○ | ○ | ○ | ○ | – | ○ | – |
| – | – | – | – | ○ | ○ | ○ | ○ | ○ | ○ | ○ | ○ | ○ | – | ○ | – |
| – | – | – | – | ○ | ○ | ○ | ○ | ○ | ○ | – | – | – | – | – | – |
| – | – | – | – | ○ | ○ | ○ | ○ | ○ | ○ | ○ | ○ | ○ | ○ | ○ | – |
| – | – | – | – | ○ | ○ | – | – | ○ | ○ | – | ● | ○ | ○ | ○ | – |
| – | – | – | – | ○ | ○ | ● | ● | ○ | ○ | ○ | ○ | ○ | ○ | ○ | – |
| – | – | – | – | ○ | ○ | – | – | ○ | ○ | ○ | ○ | ○ | ○ | ○ | – |
| – | – | – | – | ○ | ○ | ○ | ○ | ○ | ○ | | | | | | |
| – | – | – | – | ● 1) | ● 1) | – | – | ● | ● | ● | ● | – | – | – | – |
| – | – | – | – | – | – | – | – | ◇ | ◇ | ○ | ○ | – | – | – | ○ |
| ● | ● | – | – | – | – | – | – | – | – | – | – | – | – | – | – |
| – | – | ●/○ | ●/○ | – | – | – | – | – | – | – | – | – | – | – | – |
| – | – | – | – | ○ | ○ | – | – | ○ | ○ | – | – | – | – | – | – |
| – | – | – | – | ● | ● | ● | ● | ● | ● | | | | | | |
| – | – | – | – | ● | ● | ● | ● | ● | ● | | | | | | |
| – | – | – | – | ● | ● | ● | ● | ● | ● | | | | | | |
| – | – | – | – | ○ | ○ | ○ | ○ | ○ | ○ | – | – | – | – | – | ● |
| ○ | ○ | ○ | ○ | ○ | ○ | ○ | ○ | ○ | ○ | | | | | | |
| – | – | – | – | ○ | ○ | ○ | ○ | ○ | ○ | | | | | | |
| ● | ● | ○ | ○ | ○ | ○ | ○ | ○ | ○ | ○ | | | | | | |
| – | – | – | – | ○ | ○ | ○ | ○ | ○ | ○ | | | | | | |
| 2 | 2 | 3 | 3 | 2/3 4) | 2/3 4) | 2 5) | 2 5) | 2/3 4) | 2/3 4) | | | | | | |

1

● Basic version
○ Option
◇ Function is dependent on operating software
– Not possible

| | Order No. |
|---|---|
| **Operation** (continued) | |
| CNC keyboard, horizontal/vertical | See Basic Components |
| Full CNC keyboard | See Operator Components |
| Standard PC keyboard MF-II | See Operator Components |
| Diskette drive (3.5"/1.44 MB) | See Operator Components |
| Diskette drive (3.5"/1.44 MB) with USB connection | See Operator Components |
| Plain text display of user variables | |
| Multi-channel display | |
| 2D representation of 3D protection areas/work areas | |
| Actual-value system for workpiece (grinding) | |
| Menu selection via the PLC | |
| CNC program messages | |
| Online help for programming, alarms and machine data (expandable) | |
| Screen blanking | |
| Access protection, 8 levels | |
| 2 languages switchable online | |
| Languages: English, German | |
| Languages: English, German, French, Italian, Spanish | |
| Language: Simplified Chinese | |
| Language: Traditional Chinese | |
| Languages: Polish, Russian, Czech, Turkish, Hungarian | |
| Languages: Danish, Dutch, Finnish, Japanese, Portuguese/Brazilian, Swedish | |
| Language: Korean | |
| Other languages | |
| Operating software can be used for: | |
| • SINUMERIK 810D powerline/840D powerline | See HMI Software |
| • SINUMERIK 840Di | See HMI Software |
| User interface with TRANSLINE 2000 HMI Pro software | See HMI Software |
| User interface with TRANSLINE 2000 HMI Lite CE software | See HMI Software |

1) Included in scope of supply.
2) Included on the system software CD-ROM.
3) SW Version 6.4 and higher.
4) SW Version 6.5 and higher.
5) Included on CD-ROM of HMI language expansion. Please enquire about available software versions.
6) On request.

| SINUMERIK 802 | | | | SINUMERIK 810D powerline/840Di/840D powerline | | | | | | | | | | | |
|---|---|---|---|---|---|---|---|---|---|---|---|---|---|---|---|
| 802S base line | 802C base line | 802D base line | 802D | 810DE power-line | 810D power-line | 840DiE | 840Di | 840DE power-line | 840D power-line | Note on operating software<br>Blank field: Function is not dependent on operating software<br>HMI Ad-van-ced | HMI Em-bed-ded | Shop Mill | Manual Turn | Shop Turn | HT 6 |
| – | – | ○ | ● 9) | – | – | – | – | – | – | | | | | | |
| – | – | – | – | ○ | ○ | ○ | ○ | ○ | ○ | | | | | | |
| – | – | – | – | ○ | ○ | ○ | ○ | ○ | ○ | | | | | | |
| – | – | – | – | ◇ | ◇ | ○ | ○ | ◇ | ◇ | ○ | ○ | ○ | ○ | ○ | – |
| – | – | – | – | ◇ | ◇ | – | – | ◇ | ◇ | ○ | – | – | – | – | – |
| – | – | – | – | ● | ● | ◇ | ◇ | ● | ● | ● | ● | ● | – | ● | ● |
| – | – | – | – | ◇ | ◇ | – | – | ◇ | ◇ | ● | – | – | – | – | – |
| – | – | – | – | ● | ● | ◇ | ◇ | ● | ● | ● | ● | – | – | – | – |
| – | – | – | – | ● | ● | ● | ● | ● | ● | ● | ● | – | – | – | – |
| – | – | – | – | – | – | – | – | ◇ | ◇ | ● | ● | ● | – | ● | – |
| – | – | ● | ● | ● | ● | ◇ | ◇ | ● | ● | ● | ● | – | – | – | ● |
| – | – | – | – | ● | ● | ◇ | ◇ | ● | ● | ● | – | – | – | – | – |
| – | – | – | – | ● | ● | ● | ● | ● | ● | ● | ● | ● | ● | ● | ● |
| ● | ● | ● | ● | ● | ● | ● | ● | ● | ● | ● | ● | ● | – | ● | ● |
| ● | ● | ● | ● | ● | ● | ● | ● | ● | ● | ● | ● | ● | ● | ● | ● |
| ● | ● | ● | ● | ● | ● | ● | ● | ● | ● | ● | ● | ● | ● | ● | ● |
| ● 1) | ● 1) | ● 1) | ● 1) | ◇ | ◇ | ◇ | ◇ | ◇ | ◇ | ● | ● 2) | ● | ● | ● | ● 2) |
| ● 1) | ● 1) | ● 1) | ● 1) | ◇ | ◇ | ◇ | ◇ | ◇ | ◇ | ● 3) | ● 4) | ● 8) | – | ● 3) | – |
| – | – | ● 1) | ● 1) | ◇ | ◇ | ◇ | ◇ | ◇ | ◇ | ○ 5) | ○ 5) | ○ 5) | – | ○ 5) | – |
| ● 1) | ● 1) | ● 1) | – | ◇ | ◇ | ◇ | ◇ | ◇ | ◇ | ○ 5) | ○ 5) | ○ 5) | ○ 5) | ○ 5) | ○ 6) |
| – | – | – | – | ◇ | ◇ | ◇ | ◇ | ◇ | ◇ | ○ 5) | ○ 5) | ○ 5) | ○ 5) | ○ 5) | ○ 6) |
| – | – | ● 1) | ● 1) | ◇ | ◇ | ◇ | ◇ | ◇ | ◇ | ○ 5) | ○ 5) | ○ 5) | – | ○ 5) | ○ 5) |
| 6) | 6) | 6) | 6) | 6) | 6) | 6) | 6) | 6) | 6) | 6) | 6) | 6) | 6) | 6) | 6) |
| – | – | – | – | ○ | ○ | – | – | ○ | ○ | ○ | ○ | ○ | ○ | ○ | ○ |
| – | – | – | – | – | – | ○ | ○ | – | – | ○ | – | ○ 7) | – | – | ○ |
| – | – | – | – | – | – | ◇ | ◇ | ◇ | ◇ | ○ | – | – | – | – | – |
| – | – | – | – | – | – | – | – | ○ | ○ | – | – | – | – | – | – |

7) Requirement: Uninterruptible power supply and SINUMERIK 840Di SW Version 2.3.
8) SW Version 6.3 and higher.
9) For scope of supply, see Ordering Data.

● Basic version
○ Option
◇ Function is dependent on operating software
– Not possible

| | Order No. |
|---|---|
| **Axis monitoring** | |
| Working area limitation | |
| Limit switch monitor<br>Software and hardware limit switch | |
| 2D/3D protection zones | |
| Contour monitoring | |
| Contour monitoring with tunnel function | **6FC5 251-0AB16-0AA0** |
| Position monitoring | |
| Standstill monitoring | |
| Clamping monitoring | |
| Path length evaluation | **6FC5 251-0AF05-0AA0** |
| **Compensations** | |
| Backlash compensation | |
| Leadscrew error compensation | |
| Measuring system error compensation | |
| Electronic weight counterbalance | **6FC5 255-0AC00-0AA0** |
| Sag compensation, multi-dimensional | **6FC5 251-0AB15-0AA0** |
| NCU 561.4 | |
| NCU 571.4/NCU 572.4/NCU 573.4/NCU 573.5 | |
| Quadrant error compensation per operation | |
| NCU 561.4 | |
| NCU 571.4/NCU 572.4/NCU 573.4/NCU 573.5 | |
| Quadrant error compensation, automatic<br>(neural network) | **6FC5 251-0AB14-0AA0** |
| NCU 561.4 | |
| NCU 571.4/NCU 572.4/NCU 573.4/NCU 573.5 | |
| Graphical monitoring of the quadrant error compensation using the circularity test | See HMI Software |
| Temperature compensation | **6FC5 251-0AA13-0AA0** |
| Automatic drift compensation for analog speed setpoints | |
| Precontrol | |
| • Speed dependent | |
| • Acceleration dependent | **6FC5 250-0AA07-0AA0** |

1) With restricted functionality, see export information.

2) Requirement: Start-up tool for SIMODRIVE 611 digital (already included in HMI-Advanced system software, also for PC/PG).

| SINUMERIK 802 | | | | SINUMERIK 810D powerline/840Di/840D powerline | | | | | | Note on operating software<br>Blank field: Function is not dependent on operating software | | | | | |
|---|---|---|---|---|---|---|---|---|---|---|---|---|---|---|---|
| 802S base line | 802C base line | 802D base line | 802D | 810DE power-line | 810D power-line | 840DiE | 840Di | 840DE power-line | 840D power-line | HMI Ad-van-ced | HMI Em-bed-ded | Shop Mill | Manual Turn | Shop Turn | HT 6 |
| – | – | ● | ● | ● | ● | ● | ● | ● | ● | | | | | | |
| ● | ● | ● | ● | ● | ● | ● | ● | ● | ● | | | | | | |
| – | – | – | – | ● | ● | ● | ● | ● | ● | | | | | | |
| ● | ● | ● | ● | ● | ● | ● | ● | ● | ● | | | | | | |
| – | – | – | – | ○ | ○ | ○ | ○ | ○ | ○ | | | | | | |
| – | ● | ● | ● | ● | ● | ● | ● | ● | ● | | | | | | |
| – | ● | ● | ● | ● | ● | ● | ● | ● | ● | | | | | | |
| – | ● | ● | ● | ● | ● | ● | ● | ● | ● | | | | | | |
| – | – | – | – | ○ | ○ | – | – | ○ | ○ | | | | | | |
| ● | ● | ● | ● | ● | ● | ● | ● | ● | ● | | | | | | |
| ● | ● | ● | ● | ● | ● | ● | ● | ● | ● | | | | | | |
| ● | ● | ● | ● | ● | ● | ● | ● | ● | ● | | | | | | |
| – | – | – | – | ○ | ○ | – | – | ○ | ○ | | | | | | |
| – | – | – | – | ○ 1) | ○ | ○ 1) | ○ | | | | | | | | |
| | | | | | | | | – | – | | | | | | |
| | | | | | | | | ○ 1) | ○ | | | | | | |
| – | – | – | – | ● | ● | ◇ | ◇ | | | ● | – | – | – | – | – |
| | | | | | | | | – | – | | | | | | |
| | | | | | | | | ● | ● | | | | | | |
| – | – | – | – | ○ | ○ | – | – | | | | | | | | |
| | | | | | | | | – | – | | | | | | |
| | | | | | | | | ○ | ○ | | | | | | |
| – | – | – | – | ◇ | ◇ | – | – | ◇ | ◇ | ● | ○ 2) | | | | – |
| – | – | – | – | ○ | ○ | ○ | ○ | ○ | ○ | | | | | | |
| – | ● | – | – | – | – | – | – | – | – | | | | | | |
| – | – | ● | ● | ● | ● | ● | ● | ● | ● | | | | | | |
| – | – | – | – | ○ | ○ | – | – | ○ | ○ | | | | | | |

1

● Basic version
○ Option
◇ Function is dependent on operating software
– Not possible

| | Order No. |
|---|---|
| **PLC area** | |
| SIMATIC S7-200 (integrated) | |
| SIMATIC S7-300 CPU 315-2 DP (integrated) | |
| SIMATIC S7-300 CPU 314C-2 DP (integrated) | |
| NCU 561.4/NCU 571.4/NCU 572.4/NCU 573.4 | |
| SIMATIC S7-300 CPU 317-2 DP (integrated) | |
| NCU 573.5 | |
| Machining time, typically in ms/KI for bit operations [4] | |
| NCU 561.4/NCU 571.4/NCU 572.4/NCU 573.4 | |
| NCU 573.5 | |
| Machining time, typically in ms/KI for word operations [4] | |
| NCU 561.4/NCU 571.4/NCU 572.4/NCU 573.4 | |
| NCU 573.5 | |
| PLC user memory in KB, incl. basic PLC program | |
| NCU 561.4/NCU 571.4/NCU 572.4/NCU 573.4 | |
| NCU 573.5 | |
| PLC user memory, maximum configuration in KB | |
| NCU 561.4/NCU 571.4/NCU 572.4/NCU 573.4 | |
| NCU 573.5 | |
| Expansion of the PLC user memory by 64 KB | **6FC5 252-0AA03-0AA0** |
| Ladder steps memory configuration | |
| PLC programming with HiGraph (add-on package for STEP 7) | |
| PLC programming tool | See HMI Software |
| PLC programming tool, PLC program examples, standard machine data and alarm text editor on Toolbox | |
| Toolbox with basic PLC program, standard machine data and CNC variable selector | See HMI Software |
| Digital inputs | |
| • Maximum | |
| • With PROFIBUS DP, max. | |
| NCU 561.4/NCU 571.4/NCU 572.4/NCU 573.4 | |
| NCU 573.5 | |
| Digital outputs | |
| • Maximum | |
| • With PROFIBUS DP, max. | |
| NCU 561.4/NCU 571.4/NCU 572.4/NCU 573.4 | |
| NCU 573.5 | |

1) Without CNC variable selector.
2) Number = Sum of inputs and outputs.
3) Included in the basic package.
4) 1 KI = 1024 instructions; corresponds to approx. 3 KB.

| SINUMERIK 802 | | | | SINUMERIK 810D powerline/840Di/840D powerline | | | | | | | | | | | |
|---|---|---|---|---|---|---|---|---|---|---|---|---|---|---|---|
| 802S base line | 802C base line | 802D base line | 802D | 810DE power-line | 810D power-line | 840DiE | 840Di | 840DE power-line | 840D power-line | Note on operating software<br>Blank field: Function is not dependent on operating software<br>HMI Ad-van-ced | HMI Em-bed-ded | Shop Mill | Manual Turn | Shop Turn | HT 6 |
| ● | ● | ● | ● | – | – | – | – | – | – | | | | | | |
| – | – | – | – | ● | ● | ● | ● | – | – | | | | | | |
| – | – | – | – | – | – | – | – | | | | | | | | |
| | | | | | | | | ● | ● | | | | | | |
| – | – | – | – | – | – | – | – | | | | | | | | |
| | | | | | | | | ● | ● | | | | | | |
| 1.8 | 1.8 | 0.4 | 0.4 | 0.3 | 0.3 | 0.3 | 0.3 | | | | | | | | |
| | | | | | | | | 0.1 | 0.1 | | | | | | |
| | | | | | | | | 0.03 | 0.03 | | | | | | |
| 5.9 | 5.9 | 1.4 | 1.4 | 1 | 1 | 1 | 1 | | | | | | | | |
| | | | | | | | | 0.25 | 0.25 | | | | | | |
| | | | | | | | | 0.1 | 0.1 | | | | | | |
| – | – | – | – | ● 96 | ● 96 | ● 96 | ● 96 | | | | | | | | |
| | | | | | | | | ● 96 | ● 96 | | | | | | |
| | | | | | | | | ● 128 | ● 128 | | | | | | |
| – | – | – | – | 288 | 288 | 288 | 288 | | | | | | | | |
| | | | | | | | | 480 | 480 | | | | | | |
| | | | | | | | | 768 | 768 | | | | | | |
| – | – | – | – | ○ | ○ | ○ | ○ | ○ | ○ | | | | | | |
| 4000 | 4000 | 6000 | 6000 | – | – | – | – | – | – | | | | | | |
| – | – | – | – | ○ | ○ | ○ | ○ | ○ | ○ | | | | | | |
| ● 3) | ● 3) | ● 3) | ● 3) | – | – | – | – | – | – | | | | | | |
| ● 3) | ● 3) | ● 3) | ● 3) | – | – | – | – | – | – | | | | | | |
| ● 1) | ● 1) | ● 1) | ● 1) | ○ | ○ | ● | ● | ○ | ○ | | | | | | |
| 48 | 48 | 144 | 144 | 768 2) | 768 2) | 2048 2) | 2048 2) | | | | | | | | |
| – | – | 144 | 144 | 2048 2) | 2048 2) | 2048 2) | 2048 2) | | | | | | | | |
| | | | | | | | | 2048 2) | 2048 2) | | | | | | |
| | | | | | | | | 4096 2) | 4096 2) | | | | | | |
| 16 | 16 | 96 | 96 | 768 2) | 768 2) | 2048 2) | 2048 2) | | | | | | | | |
| – | – | 96 | 96 | 2048 2) | 2048 2) | 2048 2) | 2048 2) | | | | | | | | |
| | | | | | | | | 2048 2) | 2048 2) | | | | | | |
| | | | | | | | | 4096 2) | 4096 2) | | | | | | |

1

● Basic version
○ Option
◇ Function is dependent on operating software
– Not possible

| | Order No. |
|---|---|
| **PLC area** (continued) | |
| I/O inputs, max. number in bytes | |
| NCU 573.5 | |
| I/O outputs, max. number in bytes | |
| NCU 573.5 | |
| Bit memories, max. number | |
| NCU 561.4/NCU 571.4/NCU 572.4/NCU 573.4 | |
| NCU 573.5 in bytes | |
| Timers, max. number | |
| NCU 561.4/NCU 571.4/NCU 572.4/NCU 573.4 | |
| NCU 573.5 | |
| Counters, max. number | |
| NCU 561.4/NCU 571.4/NCU 572.4/NCU 573.4 | |
| NCU 573.5 | |
| FB, FC (max. number per type) | |
| NCU 561.4/NCU 571.4/NCU 572.4/NCU 573.4 | |
| NCU 573.5 | |
| DB, max. number | |
| NCU 561.4/NCU 571.4/NCU 572.4/NCU 573.4 | |
| NCU 573.5 | |
| Cyclic function block | |
| Time-controlled function blocks | |
| Equipment for PLC programming and program test with PG/PC | |
| Max. number of I/O modules (central configuration) | See Basic Components |
| Distributed DP slaves on the PROFIBUS DP, max. number: | |
| NCU 561.4/NCU 571.4/NCU 572.4/NCU 573.4 | |
| NCU 573.5 | |
| PP 72/48 I/O module | See Basic Components |
| Distributed I/O via PROFIBUS DP | |
| • Via CP 342-5 DP, data transfer rate up to 1.5 Mbit/s | |
| • Via integrated interface, data transfer rates up to 12 Mbit/s | See Communication |
| User machine data for configuring the PLC user program | |

1) Subroutines.
2) Included in the basic package.
3) Max. number 64, depending on the complexity of the slaves.
4) FBs, FCs and DBs in total max. 2048.

| SINUMERIK 802 | | | | SINUMERIK 810D powerline/840Di/840D powerline | | | | | | Note on operating software<br>Blank field: Function is not dependent on operating software | | | | | |
|---|---|---|---|---|---|---|---|---|---|---|---|---|---|---|---|
| 802S base line | 802C base line | 802D base line | 802D | 810DE power-line | 810D power-line | 840DiE | 840Di | 840DE power-line | 840D power-line | HMI Ad-van-ced | HMI Em-bed-ded | Shop Mill | Manual Turn | Shop Turn | HT 6 |
| – | – | – | – | – | – | – | – | | | | | | | | |
| | | | | | | | | 4096 | 4096 | | | | | | |
| – | – | – | – | – | – | – | – | | | | | | | | |
| | | | | | | | | 4096 | 4096 | | | | | | |
| 1024 | 1024 | 3072 | 3072 | 4096 | 4096 | 4096 | 4096 | | | | | | | | |
| | | | | | | | | 4096 | 4096 | | | | | | |
| | | | | | | | | 4096 | 4096 | | | | | | |
| 16 | 16 | 40 | 40 | 128 | 128 | 128 | 128 | | | | | | | | |
| | | | | | | | | 256 | 256 | | | | | | |
| | | | | | | | | 512 | 512 | | | | | | |
| 32 | 32 | 32 | 32 | 64 | 64 | 64 | 64 | | | | | | | | |
| | | | | | | | | 256 | 256 | | | | | | |
| | | | | | | | | 512 | 512 | | | | | | |
| 64 [1] | 64 [1] | 64 [1] | 64 [1] | 256 | 256 | 256 | 256 | | | | | | | | |
| | | | | | | | | 256 | 256 | | | | | | |
| | | | | | | | | 2048 [4] | 2048 [4] | | | | | | |
| – | – | – | – | 399 | 399 | 399 | 399 | | | | | | | | |
| | | | | | | | | 399 | 399 | | | | | | |
| | | | | | | | | 2047 [4] | 2047 [4] | | | | | | |
| ● | ● | ● | ● | ● | ● | ● | ● | ● | ● | | | | | | |
| – | – | – | – | ● | ● | ● | ● | ● | ● | | | | | | |
| ○ | ○ | ○ | ○ | ○ | ○ | ○ | ○ | ○ | ○ | | | | | | |
| – | – | ○ 2 | ○ 2 | ○ 24 | ○ 24 | – | – | ○ 24 | ○ 24 | | | | | | |
| – | – | – | – | ○ [3] | ○ [3] | ○ [3] | ○ [3] | | | | | | | | |
| | | | | | | | | ○ 32 | ○ 32 | | | | | | |
| | | | | | | | | ○ 125 | ○ 125 | | | | | | |
| – | – | ● [2] | ● [2] | – | – | ○ | ○ | – | – | | | | | | |
| – | – | – | – | ● | ● | – | – | ● | ● | | | | | | |
| – | – | ● | ● | ○ | ○ | ● | ● | ○ | ○ | | | | | | |
| ● | ● | ● | ● | ● | ● | ● | ● | ● | ● | | | | | | |

1

● Basic version
○ Option
◇ Function is dependent on operating software
– Not possible

| | Order No. |
|---|---|
| **Monitoring functions** | |
| Axis limitation from the PLC | |
| Spindle speed limitation | |
| Generator operation | **6FC5 255-0AE00-0AA0** |
| Extended stop and retract (ESR), incl. generator operation | **6FC5 250-0AE01-0AA0** |
| Tool and process monitoring [1] | See HMI Software |
| PROFIBUS tool and process monitoring | **6FC5 251-0AE71-0AA0** |
| **Safety functions** | |
| SINUMERIK Safety Integrated safety functions for personnel and machine protection [2] | See Basic Components |
| Options up to and equal SW 6: | |
| • Basic functions for up to 4 axes/spindles | **6FC5 250-0AC10-0AA0** |
| • Supplementary function from the fifth axis/spindle for each axis/spindle | **6FC5 250-0AC11-0AA0** |
| • Axis/spindle package for additional 13 axes/spindles | **6FC5 250-0AC12-0AA0** |
| Options from SW 7 and higher: | |
| • SI-Basic (for up to 1 axis/spindle; up to 4 inputs/outputs can be used for safe programmable logic) | **6FC5 250-0AG00-0AA0** |
| • SI-Comfort (for up to 1 axis/spindle; up to 64 inputs/outputs can be used for safe programmable logic) | **6FC5 250-0AG10-0AA0** |
| • SI-Axis/spindle (from 2nd axis/spindle per axis/spindle) | **6FC5 250-0AG11-0AA0** |
| • SI-Axis/spindle Package (additional 15 axes/spindles) | **6FC5 250-0AG12-0AA0** |
| SinuCom NC SI | See HMI Software |
| **Start-up** | |
| Start-up software for converter system is integrated | |
| • SIMODRIVE 611 digital | |
| • SIMODRIVE 611 universal HR | |
| Start-up software on external PC/PG | See HMI Software |
| • SIMODRIVE 611 digital | |
| • SIMODRIVE 611 universal HR | |
| User-interface on PC/PG for start-up or servicing during operation without operator panel | See HMI Software |
| Start-up trace (drive optimization without an additional oscilloscope) | |
| SinuCom NC Trace | See HMI Software |
| SINUMERIK 840Di Startup (SimoCom U and SinuCom NC) | |
| Start-up software for CNC SinuCom NC | See HMI Software |
| Series start-up via a serial interface | |
| Series start-up by programming the PC card offline or online | |

1) Product of the Solution Provider (currently for ARTIS)
2) Prerequisites: See Basic Components.
3) Included in the basic package.
4) Loadable compile cycle in SW Version 6.4 and higher in the NCU system software.

1

| SINUMERIK 802 | | | | SINUMERIK 810D powerline/840Di/840D powerline | | | | | | | | | | | |
|---|---|---|---|---|---|---|---|---|---|---|---|---|---|---|---|
| 802S base line | 802C base line | 802D base line | 802D | 810DE power-line | 810D power-line | 840DiE | 840Di | 840DE power-line | 840D power-line | Note on operating software<br>Blank field: Function is not dependent on operating software<br>HMI Ad-van-ced | HMI Em-bed-ded | Shop Mill | Manual Turn | Shop Turn | HT 6 |
| – | – | – | – | ● | ● | ● | ● | ● | ● | | | | | | |
| ● | ● | ● | ● | ● | ● | ● | ● | ● | ● | | | | | | |
| – | – | – | – | – | – | – | – | ○ | ○ | | | | | | |
| – | – | – | – | – | – | – | – | ○ | ○ | | | | | | |
| – | – | – | – | – | – | – | – | ○ | ○ | | | | | | |
| – | – | – | – | – | – | – | – | ○ 4) | ○ 4) | | | | | | |
| – | – | – | – | – | – | – | – | ○ | ○ | | | | | | |
| – | – | – | – | – | – | – | – | ○ | ○ | | | | | | |
| – | – | – | – | – | – | – | – | ○ | ○ | | | | | | |
| – | – | – | – | – | – | – | – | ● | ● | | | | | | |
| – | – | – | – | – | – | – | – | ● | ● | | | | | | |
| – | – | – | – | – | – | – | – | ● | ● | | | | | | |
| – | – | – | – | – | – | – | – | ● | ● | | | | | | |
| – | – | – | – | – | – | – | – | ○ | ○ | | | | | | |
| – | – | – | – | ◇ | ◇ | – | – | ◇ | ◇ | ● | – | | | | – |
| – | – | – | – | – | – | ● | ● | – | – | – | – | | | | – |
| – | – | – | – | ○ | ○ | – | – | ○ | ○ | | | | | | |
| ● 3) | ● 3) | ● 3) | ● 3) | ○ | ○ | ○ | ○ | ○ | ○ | | | | | | |
| – | – | – | – | ○ | ○ | – | – | ○ | ○ | ○ | – | | | | – |
| ● | ● | ● | ● | ◇ | ◇ | ◇ | ◇ | ◇ | ◇ | ● | ○ | | | | – |
| – | – | – | – | – | – | – | – | ○ | ○ | | | | | | |
| – | – | – | – | – | – | ● | ● | – | – | | | | | | |
| – | – | – | – | ○ | ○ | ● | ● | ○ | ○ | | | | | | |
| ● | ● | ● | ● | ● | ● | ◇ | ◇ | ● | ● | ● | ● | | | | – |
| – | – | ● | ● | ● | ● | – | – | ● | ● | ● | ● | | | | – |

1

● Basic version
○ Option
◇ Function is dependent on operating software
– Not possible

| | Order No. |
|---|---|
| **Diagnostic functions** | |
| PLC status | |
| LAD display | |
| Process fault diagnosis for S7-HiGraph and S7-Graph for PCU 50/PCU 70 with TRANSLINE 2000 HMI Pro | See HMI Software |
| RCS remote diagnostics/host and viewer | See HMI Software |
| PLC remote diagnostics | **6FC5 653-0AA01-0AA0** |
| Alarms and messages | |
| Trip recorder can be activated for diagnostic purposes | |
| **Tools** | |
| SinuCom FFS | See HMI Software |
| SinuCom ARC | See HMI Software |
| SINUCOPY-FFS for SIMATIC S7 PG 740 | See HMI Software |
| Programming language SIMATIC STEP 7 | See HMI Software |
| • LAD ladder diagram | |
| • FBD function block diagram | |
| • STL statement list | |
| SIMATIC STEP 7 for SINUMERIK hardware (for service functions) | |
| SinuCom PCIN | See HMI Software |
| Data backup (Backup/Restore) with Ghost on hard disk/network | See HMI Software |
| CAD reader for PC | See HMI Software |
| Offline SINUMERIK 800/840D CNC program converter | On request |

| SINUMERIK 802 | | | | SINUMERIK 810D powerline/840Di/840D powerline | | | | | | | | | | | |
|---|---|---|---|---|---|---|---|---|---|---|---|---|---|---|---|
| 802S base line | 802C base line | 802D base line | 802D | 810DE power-line | 810D power-line | 840DiE | 840Di | 840DE power-line | 840D power-line | Note on operating software<br>Blank field: Function is not dependent on operating software<br>HMI Ad-van-ced | HMI Em-bed-ded | Shop Mill | Manual Turn | Shop Turn | HT 6 |
| ● | ● | ● | ● | ● | ● | ◇ | ◇ | ● | ● | ● | ● | ● | ● | ● | ● |
| – | – | – | ● | – | – | – | – | – | – | | | – | – | – | – |
| – | – | – | – | ○ | ○ | ○ | ○ | ○ | ○ | | | | | | – |
| – | – | – | – | ◇ | ◇ | ◇ | ◇ | ◇ | ◇ | ○ | ○ | ○ | ○ | ○ | ○ |
| – | – | – | ○ | – | – | – | – | – | – | | | | | | |
| ● | ● | ● | ● | ● | ● | ● | ● | ● | ● | | | | | | |
| – | – | – | – | ● | ● | ◇ | ◇ | ● | ● | ● | ● | ● | ● | ● | – |
| – | – | ○ | ○ | ○ | ○ | – | – | ○ | ○ | | | | | | |
| – | – | ○ | ○ | ○ | ○ | – | – | ○ | ○ | | | | | | |
| – | – | ○ | ○ | ○ | ○ | – | – | ○ | ○ | | | | | | |
| ● | ● | ● | ● | ○ | ○ | ○ | ○ | ○ | ○ | | | | | | |
| – | – | – | – | ○ | ○ | ○ | ○ | ○ | ○ | | | | | | |
| – | – | – | – | ○ | ○ | ○ | ○ | ○ | ○ | | | | | | |
| – | – | – | – | ◇ | ◇ | ○ | ○ | ◇ | ◇ | ○ | – | | | | – |
| – | – | – | ○ | ○ | ○ | ○ | ○ | ○ | ○ | | | | | | |
| – | – | – | – | ● | ● | ● | ● | ● | ● | | | | | | |
| – | – | – | – | ○ | ○ | ○ | ○ | ○ | ○ | | | | | | |
| – | – | – | – | ○ | ○ | ○ | ○ | ○ | ○ | – | – | – | – | – | – |

1

## Overview of the options for SINUMERIK 810D powerline/840Di/840D powerline

| Option | Page | Order No. |
|---|---|---|
| 2nd additional machining channel and maximum memory expansion as a package | 2/6 | **6FC5 451-0AF03-0AA0** |
| 3D tool radius compensation | 2/32 | **6FC5 251-0AB13-0AA0** |
| Additional axis/spindle + channel (for NCU 561.4) | 2/2 | **6FC5 251-0AD08-0AA0** |
| Advanced Position Control | 2/12 | **6FC5 251-0AF04-0AA0** |
| Advanced Processing 1 | 2/16 | **6FC5 251-0AF10-0AA0** |
| Advanced Processing 2 | 2/16 | **6FC5 251-0AF11-0AA0** |
| Analog axis | 2/10 | **6FC5 251-0AC06-0AA0** |
| Axis container | 2/12 | **6FC5 251-0AE01-0AA0** |
| Axial coupling in the machine | 2/16 | **6FC5 251-0AD11-0AA0** |
| Axis/spindle interpolation, each additional | 2/4 | **6FC5 251-0AA03-0AA0** |
| Clearance control, 1D/3D in position control cycle | 2/20 | **6FC5 251-0AC05-0AA0** |
| CNC user memory expanded by 1 MB | 2/4 | **6FC5 251-0AD02-0AA0** |
| Continue machining at the contour (retrace support) | 2/16 | **6FC5 251-0AE72-0AA0** |
| Continuous-path control dependent analog value output | 2/18 | **6FC5 251-0AC04-0AA0** |
| Contour monitoring with tunnel function | 2/42 | **6FC5 251-0AB16-0AA0** |
| Control unit management | 2/38 | **6FC5 253-0AE03-0AA0** |
| Cycle storage separate from CNC main memory | 2/24 | **6FC5 251-0AF00-0AA0** |
| Electronic gear unit | 2/16 | **6FC5 251-0AE00-0AA0** |
| Electronic transfer | 2/18 | **6FC5 250-0AD05-0AA0** |
| Electronic weight counterbalance | 2/42 | **6FC5 255-0AC00-0AA0** |
| Enabling of internal drive control 6th axis for interpolation tasks | 2/6 | **6FC5 451-0AF02-0AA0** |
| Enabling of internal drive control 6th axis for positioning tasks | 2/6 | **6FC5 451-0AF01-0AA0** |
| Evaluation of internal drive variables | 2/20 | **6FC5 251-0AB17-0AA0** |
| Extended stop and retract ESR | 2/48 | **6FC5 250-0AE01-0AA0** |
| Fast interpolation link | 2/12 | **6FC5 251-0AF03-0AA0** |
| Generator operation | 2/48 | **6FC5 255-0AE00-0AA0** |
| Handling transformation package | 2/16 | **6FC5 251-0AD07-0AA0** |
| Inclined axis | 2/16 | **6FC5 251-0AB06-0AA0** |
| Interrupt routines with high-speed retraction from the contour | 2/20 | **6FC5 251-0AA00-0AA0** |
| Involute interpolation | 2/14 | **6FC5 251-0AF01-0AA0** |
| I/O interfacing via PROFIBUS DP | 2/36 | **6FC5 252-0AD00-0AA0** |
| Laser switching signal, high-speed | 2/20 | **6FC5 251-0AE74-0AA0** |
| Link axis | 2/12 | **6FC5 251-0AD10-0AA0** |
| Machining channel, each additional | 2/2 | **6FC5 251-0AA07-0AA0** |
| Machining channels (4) and axes (13) as a package | 2/6 | **6FC5 251-0AD01-0AA0** |
| Machining package 5 axes | 2/16 | **6FC5 251-0AA10-0AA0** |

| Option | Page | Order No. |
|---|---|---|
| Master/slave for drives | 2/10 | **6FC5 251-0AC07-0AA0** |
| Master-value coupling and curve table interpolation | 2/14 | **6FC5 251-0AD06-0AA0** |
| Measurement level 2 | 2/18 | **6FC5 250-0AD00-0AA0** |
| Mode group (MG), each additional | 2/2 | **6FC5 251-0AD00-0AA0** |
| Multi-axis interpolation | 2/14 | **6FC5 251-0AA16-0AA0** |
| Multi-channel sequence programming | 2/26 | **6FC5 253-0AF03-0AA0** |
| Non mode-specific actions | 2/20 | **6FC5 251-0AD04-0AA0** |
| OA NCK compile cycles | 2/20 | **6FC5 251-0AA20-0AA0** |
| Online ISO dialect interpreter | 2/24 | **6FC5 253-0AE00-0AA0** |
| Operation with tool management | 2/34 | **6FC5 251-0AB12-0AA0** |
| Oscillation functions | 2/18 | **6FC5 251-0AB04-0AA0** |
| Pair of synchronized axes (gantry axes) | 2/10 | **6FC5 255-0AB00-0AA0** |
| Path length evaluation | 2/42 | **6FC5 251-0AF05-0AA0** |
| PLC user memory expanded by 64 KB | 2/44 | **6FC5 252-0AA03-0AA0** |
| Polynomial interpolation | 2/14 | **6FC5 251-0AA15-0AA0** |
| Positioning axis/auxiliary spindle, each additional | 2/6 | **6FC5 251-0AA04-0AA0** |
| Position switching signals/ cam controller | 2/10 | **6FC5 251-0AB07-0AA0** |
| Precontrol, acceleration-dependent | 2/42 | **6FC5 250-0AA07-0AA0** |
| PROFIBUS tool and process monitoring | 2/48 | **6FC5 251-0AE71-0AA0** |
| Program preprocessing | 2/8 | **6FC5 251-0AC02-0AA0** |
| Punching/nibbling | 2/18 | **6FC5 251-0AC00-0AA0** |
| Quadrant error compensation, automatic | 2/42 | **6FC5 251-0AB14-0AA0** |
| Safety Integrated<br>• Axis/spindle package for additional 13 axes/spindles | 2/48 | **6FC5 250-0AC12-0AA0** |
| • Basic function | 2/48 | **6FC5 250-0AC10-0AA0** |
| • Supplementary function from the 5th axis/spindle | 2/48 | **6FC5 250-0AC11-0AA0** |
| Sag compensation, multi-dimensional | 2/42 | **6FC5 251-0AB15-0AA0** |
| Setpoint exchange | 2/10 | **6FC5 251-0AE76-0AA0** |
| Setpoint linkage spanning NCUs | 2/12 | **6FC5 251-0AF02-0AA0** |
| Spline interpolation for 3-axis machining | 2/14 | **6FC5 251-0AF14-0AA0** |
| Spline interpolation for 5-axis machining | 2/14 | **6FC5 251-0AA14-0AA0** |
| Synchronous actions level 2 | 2/18 | **6FC5 251-0AD05-0AA0** |
| Synchronous spindle/multi-edge turning | 2/12 | **6FC5 255-0AB01-0AA0** |
| Tangential control | 2/10 | **6FC5 251-0AB11-0AA0** |
| Temperature compensation | 2/42 | **6FC5 251-0AA13-0AA0** |
| TRANSMIT/ peripheral surface transformation | 2/16 | **6FC5 251-0AB01-0AA0** |
| Traversing to fixed stop | 2/10 | **6FC5 255-0AB02-0AA0** |

| ● Basic version<br>○ Option<br>– Not possible | FM 353 | FM 354 | FM 357-2L<br>FM 357-2LX<br>FM 357-2H | SIMODRIVE 611 universal HR |
|---|---|---|---|---|
| **Structure/application** | | | | |
| Structure | | | | |
| • SIMATIC S7-300 | ● | ● | ● | – |
| • SIMODRIVE 611 | – | – | – | ● |
| Axes per module | 1 | 1 | 4 | 1/2 |
| Channels per module | 1 | 1 | 4 3) | – |
| Interpolating axes, max. | – | – | 4 | 2 |
| Max. modules per SIMATIC programmable controller | 1) | 1) | 3 3) | – |
| Drives | | | | |
| • FM STEPDRIVE (stepper motor control) | ● | – | ● | |
| • SIMODRIVE 611 universal HR (with analog setpoint interface) | – | ● | ● | |
| • SIMODRIVE 611 universal HR via PROFIBUS DP | – | – | ● | |
| • SIMOVERT MASTERDRIVES MC via PROFIBUS DP | – | – | ● | |
| **Measuring systems that can be connected** | | | | |
| Indirect measuring systems | | | | |
| • Incremental rotary measuring systems via RS 422 | – | ● | ● 2) | |
| • Incremental encoder with sin/cos 1 $V_{PP}$ | – | – | – | ● |
| • Resolver | – | – | – | ● |
| • Absolute rotary measuring systems with SSI | – | ● | ● 2) | |
| • Absolute rotary measuring systems with EnDat | – | – | – | ○ |
| Direct measuring systems | | | | |
| • Incremental rotary measuring systems via RS 422 | – | ● | ● 2) | |
| • Incremental encoder with sin/cos 1 $V_{PP}$ | – | – | – | ● |
| • Resolver | – | – | – | ● |
| • Absolute rotary measuring systems with SSI | – | ● | ● 2) | |
| • Absolute linear scale with SSI | – | ● | ● 2) | |
| • Absolute linear scale with EnDat | – | – | – | ● |

1) Depending on requirements and module complement of the subrack.
2) Also in combination with stepper drive.
3) With FM 357-2H only 1.

# Positioning modules



● Basic version
○ Option
– Not possible

| | FM 353 | FM 354 | FM 357-2L<br>FM 357-2LX<br>FM 357-2H | SIMODRIVE 611 universal HR |
|---|---|---|---|---|
| **Functionality** | | | | |
| Traversing range in m | ±1000 | ±1000 | ±1000 | ±200 |
| Speed in mm/min | – | 0.01 ...<br>500 000 | 0.001 ...<br>>10 000 000 | 1 ...<br>2 000 000.000 |
| Max. stepping rate in kHz | 200 | – | 750 | – |
| Acceleration in m/s$^2$ | – | 0.001 ... 100 | 0.001 ... 100 | 0.001 ... 999 |
| Acceleration in kHz/s for stepper drives | 0.01 ... 10 000 | – | 0.001 ... 100 | – |
| Jerk time in s | – | 0 ... 10 | 0 ... 10 | 0 ... 0.2 |
| Basic resolution | | | | |
| • in mm | $10^{-3}$ | $10^{-3}$ | $10^{-3}$ | $10^{-3}$ |
| • in inch | $10^{-4}$ | $10^{-4}$ | $10^{-4}$ | $10^{-4}$ |
| • in degrees | $10^{-2}$,$10^{-4}$ | $10^{-2}$,$10^{-4}$ | $10^{-2}$,$10^{-4}$ | $10^{-3}$ |
| Position-controlled mode | – | ● | ● | ● |
| Controlled running with stepper drives | ● | – | ● | – |
| Position control cycle in ms | – | 2 | 2 ... 3 | 1 ... 4 |
| Interpolation time in ms | 2 | 2 | 6 ... 9 | 2 ... 20 |
| Rotary axis | ● | ● | ● | ○ |
| Automatic block search | ● | ● | ● | ○ |
| Programmable acceleration | ● | ● | ● | ○ |
| High-speed process signals | | | | |
| • Inputs | 4 | 4 | 12 | 1 |
| • Outputs | 4 | 4 | 8 1) | – |
| Options for assigning the high-speed inputs: | | | | |
| • External start | ● | ● | ● | ○ |
| • Enable input (Stop) | ● | ● | ● | ○ |
| • External block change | ● | ● | ● 2) | ○ |
| • Set actual value on-the-fly | ● | ● | ● 2) | – |
| • Measurement on-the-fly | ● | ● | ● | – |
| • Home position switch | ● | ● | ● | ○ |
| • Reversing cam | ● | ● | ● | – |
| Options for assigning the high-speed outputs: | | | | |
| • Position reached Stop | ● | ● | ● | – |
| • Up, down | ● | ● | ● | – |
| • M function output M97/M98 | ● | ● | ● 2) | – |
| • Start enable | ● | ● | ● 2) | – |
| • Direct output (for user) | ● | ● | ● | – |
| • Cam output | – | – | ● | – |

1) Expandable using local bus segment.
2) Via synchronized actions.

● Basic version
○ Option
– Not possible

| | FM 353 | FM 354 | FM 357-2L<br>FM 357-2LX<br>FM 357-2H | SIMODRIVE 611 universal HR |
|---|---|---|---|---|
| **CNC programming** | | | | |
| Programming language (DIN 66025) | ● | ● | ● | – |
| No. of traversing programs | 199 3) | 199 3) | ● 4) | 1 |
| Max. program length in blocks | 100 | 100 | ● 4) | 64 |
| Max. block capacity per module | ● 3) | ● 3) | ● 4) | 64 |
| Subroutine levels, max. | 1 | 1 | 11 | – |
| No. of subroutine passes, max. | 250 | 250 | ≤ 9999 | – |
| Max. number of different subroutines from one program | 20 | 20 | ● 4) | – |
| Dimensions in mm, degrees, inch | ● | ● | ● | ○ |
| Block skip | ● | ● | ● | ○ |
| Subroutines | ● | ● | ● | – |
| Endless loop with M18 | ● | ● | ● | With GOTO |
| M function, actual-value-specific | – | – | ● | – |
| M function, time/acknowledgement driven | ● | ● | ● | – |
| Syntax check | ● | ● | ● | ● |
| **Communication** | | | | |
| Backup of user data on PG from | | | | |
| • Hard disk, floppy disk | FM Param | FM Param | FM Param | ○ |
| • Memory card | – | – | ● | – |
| I/O bus, S7-CPU ↔ FM | ● | ● | ● | – |
| Software technology module for communication between CPU and positioning module | ● | ● | ● | – |
| Multi-point interface MPI | | | | |
| • Via SIMATIC S7-CPU | ● | ● | ● | – |
| Networking with PROFIBUS DP via SIMATIC S7 CP 342-5 DP | ○ | ○ | ○ | – |
| PROFIBUS DP with Motion Control | – | – | ● 5) | ○ |
| SIMODRIVE drive interface | – | ±10 V | ±10 V | – |
| FM STEPDRIVE drive interface (stepping rate, direction signal) | ● | – | ● | – |
| Data transfer via memory card | – | – | ● | – |

3) Limited by program memory (16 KB).
4) Limited by program memory (770 KB).
5) Cannot be used when HT 6 is used in combination with FM 357-2H.

# Positioning modules



● Basic version
○ Option
– Not possible

| | FM 353 | FM 354 | FM 357-2L<br>FM 357-2LX<br>FM 357-2H | SIMODRIVE 611 universal HR |
|---|---|---|---|---|
| **Operation** | | | | |
| Standard screens for OP7 | ● 1) | ● 1) | – | – |
| Standard screens for OP17 | ● 1) | ● 1) | ● 1) | – |
| Standard screens for OP27 | – | – | ● 1) | – |
| Standard screens for TP 170B/MP 270B | – | – | ● 1) | – |
| **Operating modes and machine functions** | | | | |
| Incremental dimension, relative | ● | ● | ● | ● |
| Jog mode | ● | ● | ● | ● |
| Control | ● | ● | ● | ○ |
| MDI | ● | ● | ● 4) | – |
| Automatic | ● | ● | ● | ● |
| Reference point approach | ● | ● | ● | ● |
| Follow-up mode | – | ● | ● | ○ |
| Parking axis | ● | ● | ● | ○ |
| Simulation | ● | ● | ● | – |
| Length measurement | ● | ● | ● | – |
| Retrigger reference point | ● | ● | ● | – |
| Switch off enable input | ● | ● | ● | – |
| Switch off software limit switch | ● | ● | ● | – |
| Measurement on-the-fly | ● | ● | ● 2) | – |
| Switch off automatic drift compensation | – | ● | ● | – |
| Preset (set actual value) | ● | ● | ● | – |
| Block search | ● | ● | – | – |
| Teach In | ● | ● | ● 3) | ○ |
| Delete distance-to-go | ● | ● | ● | – |
| Restart | ● | ● | ● | – |
| Handling transformation | – | – | ● 3) | – |

1) Included in the configuration package.
2) Not with FM 357-2L.
3) With FM 357-2H.
4) Only via start-up screen.

| ● Basic version<br>○ Option<br>– Not possible | FM 353 | FM 354 | FM 357-2L<br>FM 357-2LX<br>FM 357-2H | SIMODRIVE 611 universal HR |
|---|---|---|---|---|
| **Compensations and reference points** | | | | |
| 20 tool compensations | ● | ● | ● | – |
| Tool compensations 1 length + 1 wear (add./abs.) | ● | ● | ● | – |
| Tool compensation, 3 lengths | – | – | ● | – |
| Work offset | ● | ● | ● | ● |
| Reference point offset | ● | ● | ● | ● |
| Automatic drift compensation for analog speed setpoints | – | ● | ● | – |
| Backlash compensation | ● | ● | ● | ● |
| **Axis monitoring functions** | | | | |
| Software limit-switch monitoring | ● | ● | ● | ● |
| Position monitoring | – | ● | ● | ● |
| Standstill monitoring | – | ● | ● | ● |
| Rotation monitoring | ● | – | ● | – |
| Plausibility in data communication | ● | ● | ● | – |
| Limit value | ● | ● | ● | ● |
| Following error | – | ● | ● | ● |
| Cable break | – | ● | ● | ● |
| Setpoint | ● | ● | ● | – |
| Watchdog | ● | ● | ● | – |
| **PLC area** | | | | |
| FM can be used in SIMATIC S7-300 | CPU 314 and higher | CPU 314 and higher | CPU 314C and higher | – |
| PLC programming with HiGraph Add-on package for STEP 7 | – | – | ○ | – |
| SIMATIC S7 technology modules | ● | ● | ● | – |
| Digital inputs/outputs, max. | 1024 | 1024 | 992 | 8 [5] |
| No. of I/O modules, max. | 32 | 32 | 31 | – |
| Bit memories | 2048 | 2048 | 2048 | – |
| Counters/timers | 256/256 | 256/256 | 256/256 | – |
| Main memory in KB | 48 | 48 | 48 | – |

5) Expansion is possible via options.

1

● Basic version
○ Option
– Not possible

| | FM 353 | FM 354 | FM 357-2L<br>FM 357-2LX<br>FM 357-2H | SIMODRIVE 611 universal HR |
|---|---|---|---|---|
| **PLC area** (continued) | | | | |
| Machining time | | | | |
| • Bit commands, typ. in µs | 0.1 | 0.1 | 0.1 | – |
| • Word commands, typ. in µs | 1.0 | 1.0 | 1.0 | – |
| FB/FC/DB per type | 512/512/511 | 512/512/511 | 512/512/511 | – |
| Cyclic function block | ● | ● | ● | – |
| Time-controlled function blocks | ● | ● | ● | – |
| STEP 7 programming language | ● | ● | ● | – |
| Programming: STL, SCL, LAD/FBD | ● | ● | ● | – |
| Equipment for PLC programming and program testing | PG 7../PC | PG 7../PC | PG 7../PC | – |
| Memory card (flash EPROM) | CPU 314<br>CPU 315 | CPU 314<br>CPU 315 | CPU 314C<br>CPU 315<br>CPU 316<br>CPU 318-2 | – |
| **Diagnostic functions** | | | | |
| PLC status | ● | ● | ● | – |
| Diagnostic buffer specifying error ID-codes | ● 1) | ● 1) | ● 1) | ● |
| Servo alarms | ● | ● | ● | ● |
| Diagnostic alarms and messages | ● | ● | ● | ● |
| **Start-up/parameterization** | | | | |
| PG 720, PG 740 and PG 760 programming devices | ○ | ○ | ○ | ● |
| PC with RS 232 C | – | – | – | ● |
| PC with MPI card | ○ | ○ | ○ | – |
| Windows-based start-up tool | ● | ● | ● | ● |
| Configured using SIMATIC STEP 7 | ● | ● | ● | ● |
| Start-up functions | – | – | – | ● |
| • Measuring functions | – | – | – | ● |

1) The last 5 events.

## Overview

As a consequence of the prevailing export restrictions applicable to the system software of numerical controls, in relation to particular control functions in accordance with the European/German Export List, SINUMERIK 810D powerline, SINUMERIK 840Di and SINUMERIK 840D powerline are available in two versions.

In the case of SINUMERK 810D powerline, this applies to CCU components with integrated system software, with SINUMERIK 840Di to NCK system software and with SINUMERIK 840D powerline to NCU system software.

The **standard versions of** SINUMERIK 810D powerline, SINUMERIK 840Di and SINUMERIK 840D powerline offer the full scope of control functions, but require **official approval** when exported to countries outside the EU.

The **export versions** SINUMERIK 802S base line, SINUMERIK 802C base line, SINUMERIK 802D base line, SINUMERIK 802D, SINUMERIK 810DE powerline, SINUMERIK 840DiE and SINUMERIK 840DE powerline have limited functionality in accordance with the export list restrictions and therefore do not require **official approval** as a result of their "Type" in accordance with EU or German law.

The approval status for the complete CNC system is correspondingly dependent on the hardware or software version used.

General note:

*If any particular components require official re-export approval according to US law, this must be duly filed for. Information about official approval requirements for supplied components is given in the delivery documentation:*
*Goods labeled here with "AL not equal to N" are subject to European or German export authorization when they are exported out of the EU. Goods labeled with "ECCN not equal to N" are subject to US re-export authorization. Even if goods are not labeled or labeled with "AL:N" or "ECCN:N", they may still be subject to export authorization due to the final destination and end use of the goods.*

### *Functional restrictions for export versions*

| Function | Order No. | 802S base line 802C base line 802D base line 802D | 810DE power-line | 840DiE | 840DE power-line |
|---|---|---|---|---|---|
| Helical interpolation 2D+6 | ● | – | – | – | – |
| Machining package five axes | **6FC5 251-0AA10-0AA0** | – | – | – | – |
| Multi-axis interpolation (>4 interpolating axes) | **6FC5 251-0AA16-0AA0** | – | – | – | – |
| OA NCK compile cycles | **6FC5 251-0AA20-0AA0** | – | – | – | – |
| Handling transformation package | **6FC5 251-0AD07-0AA0** | – | – | – | – |
| Clearance control, 1D/3D in position control cycle [1] | **6FC5 251-0AC05-0AA0** | – | – | – | – |
| Synchronized actions [1] | ● | – | ▦ | ▦ | ▦ |
| Sag compensation, multi-dimensional | **6FC5 251-0AB15-0AA0** | – | ▦ | ▦ | ▦ |
| Electronic transfer | **6FC5 250-0AD05-0AA0** | – | – | ▦ | ▦ |
| Master-value coupling and curve table interpolation | **6FC5 251-0AD06-0AA0** | – | ▦ | ▦ | ▦ |
| Electronic gear unit [1] | **6FC5 251-0AE00-0AA0** | – | – | ▦ | ▦ |
| Synchronized actions level 2 [1] | **6FC5 251-0AD05-0AA0** | – | ▦ | ▦ | ▦ |
| Continuous dressing [2] | ● | – | ▦ | ▦ | ▦ |
| Evaluation of internal drive variables [2] | **6FC5 251-0AB17-0AA0** | – | ▦ | ▦ | ▦ |
| Measurement level 2 [2] | **6FC5 250-0AD00-0AA0** | – | ▦ | ▦ | ▦ |

● Basic version
▦ Limited functionality, see "Glossary".
– Not possible

1) The functional restrictions for the export versions SINUMERIK 810DE powerline/840DE powerline, SW release 6.4 or higher, and SINUMERIK 840DiE, SW release 2.3 or higher, are limited to "4 interpolating axes".
2) The functional restrictions for the export versions SINUMERIK 810DE powerline/840DE powerline, SW release 6.5 or higher, have been canceled!

1

## Export and standard control versions

### *Important export information*

Export of standard versions of components or systems can be subjected to a time-consuming official authorization process, so it is recommended that **the export version** is used where applicable.

When the standard variant is used, it is important to note that official authorization is also required for the export of components subject to export approval within the framework of service provision, the supply of spare parts and for delivery of software updates and upgrades. This also applies in particular in cases where the control is exported after the machine manufacturer installed it in a machine tool. The lengthy official approval procedure can severely restrict after-sales service.

When an application for an export permit for a system is made, we therefore recommend that spare parts supplies for any components requiring approval are included in the application as a matter of course to avoid future delays.

If the control system is to be exported as an installed component in a machine tool, we recommend that machine manufacturers include any components requiring approval in the export permit application for the machine. If the machine itself does not require official export approval, but contains components which do, we recommend that an export permit for the replacement supply of such components is applied for in advance.

Spare parts supplies requiring official approval can then be exported quickly and easily by the machine manufacturer himself, or by Siemens if the manufacturer can make the original export permit available to Siemens.

# 2

# 2 Machine and Setting Data

2.1 Explanatory notes on the machine and setting data ..... 2-76
2.1.1 General information ..... 2-76
2.1.2 Handling of machine data ..... 2-80

2.2 Drive machine data ..... 2-83

2.3 Machine data for hydraulics module ..... 2-154

2.4 Machine data for operator panel ..... 2-168

2.5 General machine data ..... 2-206
2.5.1 System settings ..... 2-207
2.5.2 System settings ..... 2-243
2.5.3 Central drive data ..... 2-249
2.5.4 Central drive data ..... 2-254

2.6 Channel-specific machine data ..... 2-271
2.6.1 Basic channel machine data ..... 2-272
2.6.2 Machine data for grinding function ..... 2-295
2.6.2 Channel auxiliary function settings ..... 2-298
2.6.3 Transformation definitions in channel ..... 2-307
2.6.4 Punching and nibbling ..... 2-325
2.6.5 Channel-specific memory settings ..... 2-329

2.7 Axis-specific machine data ..... 2-338
2.7.1 Configuration ..... 2-339
2.7.2 Encoder matching ..... 2-345
2.7.3 Closed-loop control ..... 2-347
2.7.4 Reference point approach ..... 2-358
2.7.5 Spindles ..... 2-361
2.7.6 Monitoring functions ..... 2-366
2.7.7 Safety Integrated ..... 2-370
2.7.8 Travel to fixed stop ..... 2-386
2.7.9 Axis-specific memory settings ..... 2-393

2.8 Setting data ..... 2-394
2.8.1 General setting data ..... 2-394
2.8.2 Channel-specific setting data ..... 2-398
2.8.3 Axis-specific setting data ..... 2-408

2.9 Machine data for ManualTurn, ShopMill, ShopTurn ..... 2-413

© Siemens AG 2004 All Rights Reserved

# 2.1 Explanatory notes on the machine and setting data

## 2.1.1 General information

**Data in the lists**

Apart from the Identifier and Name/Other information, the lists of machine and setting data also include the following information:

**Number**

The number of the data is displayed when it is listed on the MMC. This number is output when the data is saved if MD 11230: MD_FILE_STYLE has been set correspondingly.

**Cross reference**

The data is described in detail in the specified description of functions or guide (see section headed “References”).

**Active**

A change to the data becomes active after

- POWER ON (po) “RESET” key on the front panel of the NCU module
- NEW_CONF (cf) - “Activate MD” softkey on MMC
  - “RESET” key on the control unit
  - Changes possible at block boundaries in program mode
- RESET at end of program M2/M30
- RESET (re) “RESET” key on the control unit
- IMMEDIATELY (so) After input of the value

The activation levels are listed above in order of priority.

**Protection levels**

Protection levels are indicated by numbers with the following meanings:

0 or 10: SIEMENS
1 or 11: OEM-HIGH
2 or 12: OEM-LOW
3 or 13: End user
4 or 14: Keyswitch position 3
5 or 15: Keyswitch position 2
6 or 16: Keyswitch position 1
7 or 17: Keyswitch position 0.
**Complete protection:**
The numbers within the range from 0 to 7 determine that assigned data in the NC program and in the MDA mode **cannot** be overwritten or read.
**Conditional protection:**
The numbers within the range from 10 to 17 determine only for user data (GUD) that assigned data in the NC program and in the MDA mode can be overwritten or read.
The operation and display are always protected for both protection levels.

© Siemens AG 2004 All Rights Reserved

The interlock for protection levels 0 to 3 can be canceled by setting a password, the interlocks 4 to 7 can be canceled via keyswitch position.
The user has only access to information which corresponds to the current protection level and to lower protection levels. The machine data are assigned varying protection levels as standard function.

The user can **change** the priority of the protection levels. In the machine data, only low priority protection levels can be specified, but higher priority levels can be specified in the setting data.
The following passwords are used for redefinition by the user:
**APR** (Access protection read) indicate read authorization
**APW** (Access protection write) indicate write authorization.
After the password, you will find the protection level to be set in each case as number.

**Example 1:** Change rights for individual MDs

```
%_N_SGUD_DEF            File for global variables
;$PATH=/_N_DEF_DIR
REDEF $MA_CTRLOUT_SEGMENT_NR APR 2 APW 2

REDEF $MA_ENC_SEGMENT_NR APR 2 APW 2

REDEF $SN_JOG_CONT_MODE_LEVELTRIGGRD APR 2 APW 2
M30
```

The file becomes active when the next _N_INITIAL_INI is read in.

Various protection levels are specified for writing (changing) or reading (part program or PLC). In the section lists of this document, the protection levels per machine data are indicated in the form of i/j.
**Example:**
MD 10000 has protection level 2/7, i.e. protection level 2 (corresponding to password) is required to write data and protection level 7 to read data.

In order to get into the machine data area, keyswitch position 3 is required at least.

**References:** /PGA/, Programming Guide, Section 1.5
/FB/, A2, "Various Interface Signals"
/BA/, Operator's Guide

**Unit**

The unit refers to the default setting for the machine data
SCALING_FACTOR_USER_DEF_MASK,
SCALING_FACTOR_USER_DEF and
SCALING_SYSTEM IS METRIC = 1.

Depending on the MD SCALING_SYSTEM_IS_METRIC, the physical units differ as follows:

| MD 10240 = 1 | MD 10240 = 0 |
|---|---|
| mm | inch |
| mm/min | inch/min |
| $m/s^2$ | $inch/s^2$ |
| $m/s^3$ | $inch/s^3$ |
| mm/rev | inch/rev |

"-" is entered in the field if the MD is not based on any physical unit.

© Siemens AG 2004 All Rights Reserved

**Default value**

This is the value to which the machine data is preset. " / " is entered in the list if there are different default values for the channels.

Some machine data are provided with different default values depending on the NCU used.

**Note**

When data is entered via the MMC, the input value is limited to 10 places plus decimal point and sign.

**Value range (minimum and maximum value)**

Specification of the input limits. If no value range is specified, the data type determines the input limits and "∗∗∗" is entered in the field.

**Data type**

| | |
|---|---|
| BOOLEAN | Machine data bit (1 or 0) |
| BYTE | Integer values (from -128 to 127) |
| DOUBLE | Real and integer values (from " $4.19*10^{-307}$ to " $1.67*10^{308}$) |
| DWORD | Integer values (from $-2.147*10^{9}$ to $2.147*10^{9}$ ) |
| DWORD | Hexadecimal values (from 00000000 to FFFFFFFF) |
| STRING | Character string (maximum 16 characters) consisting of capital letters with digits and underlining |
| UNSIGNED WORD | Integer values (from 0 to 65536) |
| SIGNED WORD | Integer values (from -32768 to 32767) |
| UNSIGNED DWORD | Integer values (from 0 to 4294967300) |
| SIGNED DWORD | Integer values (from -2147483650 to 2147483649) |
| WORD | Hexadecimal values (from 0000 to FFFF) |
| FLOAT DWORD | Real values (from "$8.43*10^{-37}$ to "$3.37*10^{38}$) |

**Overview of machine and setting data**

The machine and setting data are divided into the following areas:

Table Overview of machine and setting data

| Area | Designation |
|---|---|
| From 1000 to 1799 | Machine data for drives |
| From 9000 to 9999 | Machine data for operator panel |
| From 10000 to 18999 | General machine data |
| From 19000 to 19999 | Reserved |
| From 20000 to 28999 | Channel-specific machine data |
| From 29000 to 29999 | Reserved |

© Siemens AG 2004 All Rights Reserved

| Area | Designation |
|---|---|
| From 30000 to 38999 | Axis-specific machine data |
| From 39000 to 39999 | Reserved |
| From 41000 to 41999 | General setting data |
| From 42000 to 42999 | Channel-specific setting data |
| From 43000 to 43999 | Axis-specific setting data |
| From 51000 to 61999 | General machine data for compile cycles |
| From 62000 to 62999 | Channel-specific machine data for compile cycles |
| From 63000 to 63999 | Axis-specific machine data for compile cycles |
| | |
| | |
| | |

**Index for MD and SD**

The section headed INDEX contains a special index for the machine and setting data listed in this section.

**Data identifiers**

The designation of the machine data is displayed on the MMC. The internal data identifier requires additional identifiers. These identifiers must be specified if a machine data is changed through programming or read in via the serial interface.

**Data areas**

| | | |
|---|---|---|
| $MM_ | Operator panel data | |
| $MN_/$SN_ | General machine data/setting data | |
| $MC_/$SC_ | Channel-specific machine data/setting data | |
| $MA_/$SA_ | Axis-specific machine data/setting data | |
| $MD_ | Drive machine data | |
| Please note: | $ | System variable |
| | M | Machine data |
| | S | Setting data |
| | M, N, C, A, D | Subarea (second letter) |

Axis data are addressed via the axis name. The internal axis designation (AX1, AX2 ... AX8) or the name specified in MD 10000: AXCONF_NAME_TAB can be used as the axis name.
E.g.: $MA_JOG_VELO[Y1]=2000
The JOG velocity of axis Y1 is 2000 mm/min.

The contents of a machine data must be preceded and followed by an apostrophe (e.g. ‘X1’ or ‘H41’) if they are a STRING (e.g. X1) or a hexadecimal value (e.g. H41).
E.g.: $MN_DRIVE_INVERTER_CODE[0]=‘H14’
FDD module 9/18 A in slot 1 of drive bus.

In order to address various contents of a machine data, entries in square brackets are required.
E.g.: $MA_FIX_POINT_POS[0,X1]=500.000

**Examples**

$MN_AUXFU_GROUP_SPEC[2]=‘H41‘
Output instant of auxiliary functions of 3rd auxiliary function group.

© Siemens AG 2004 All Rights Reserved

$MN_AXCONF_MACHAX_NAME_TAB[0]='X1'
Name of 1st machine axis is X1.

$MA_REF_SET_POS[0,X1]=100.00000
1st reference point value of axis X1 is 100 mm.

Assignment of channel-specific machine data:

| | |
|---|---|
| CHANDATA(1) | Assignment channel 1 |
| $MC_CHAN_NAME='CHAN1' | Channel name for channel 1 |
| $MC_AXCONF_GEOAX_NAME_TAB[1]='Y' | Name of 2nd geometry axis in channel 1 is Y |
| ... | |
| R10 = 33.75 | R10 of channel 1 |
| ... | |
| CHANDATA(2) | Assignment channel 2 |
| $MC_CHAN_NAME='CHAN2' | Channel name for channel 2 |
| ... | |
| R10 = 96.88 | R10 of channel 2 |
| ... | |

## 2.1.2 Handling of machine data

**Loading of scaling machine data**

Scaling machine data also include information which determines how machine data are scaled in reference to a specific physical unit (e.g. velocities).

The following are scaling machine data:
MD 10220: SCALING_USER_DEF_MASK (activation of scaling factors)
MD 10230: SCALING_FACTORS_USER_DEF (scaling factors of physical quantities)
MD 10240: SCALING_SYSTEM_IS_METRIC (basic system is metric)
MD 10250: SCALING_VALUE_INCH (conversion factor for switchover to INCH system)
MD 30300: IS_ROT_AX (rotary axis)

When machine data are loaded (via MMC, V24, program), they are scaled with reference to the physical unit which is valid at the time of loading. If the data block contains new scaling information (e.g. rotary axis declaration), those machine data which are dependent on scaling are converted to the new scaling factor at the next "Power ON". The machine data do not therefore contain the expected values (e.g. F values too low for rotary axis traversal).

**Example**

The open-loop control has been started up with default values. The 4th axis in the MD file to be loaded is defined as a rotary axis and contains the following machine data:
$MA_IS_ROT_AX[A1] = 1 (rotary axis)
$MA_MAX_AX_VELO [A1]= 1000 [rev/min] (maximum axis velocity)
When the MD block is loaded, the velocity is interpreted in relation to a linear axis (default setting $MA_IS_ROT_AX[A1]=0) and scaled according to the linear velocity. On the next Power ON, the open-loop control detects that this axis is defined as a linear axis and scales the velocity in relation to rev/min. The machine data then no longer contains the value "1000", but the value "2.77777778" (1000/360). If the MD file is loaded again, then the axis is already defined as a rotary axis and the velocity is interpreted and scaled as a rotary axis value. The MD then contains the value "1000" and is interpreted by the control in rev/min.

**Suggestion for step-by-step loading of machine data**

- Change the appropriate machine data manually via the MMC (MD 10220, 10230, 10240, 10250, 30300) and initiate NCK booting. Then read in the MD block via V24 or part program and initiate NCK booting.

© Siemens AG 2004 All Rights Reserved

- Set up an MD block with the scaling machine data (MD 10220, 10230, 10240, 10250, 30300). Load this block and initiate NCK booting. Then read in the entire MD block and initiate NCK booting.
- As an alternative to the methods given above, an MD block can also be loaded twice (via V24 or as a part program), with an NCK booting after each loading operation.

**Note**

**Saving only machine data with changed values**

With regard to the saving of machine and setting data, it is possible to define in MD 11210: UPLOAD_MD_CHANGES_ONLY (save only changed machine data) whether all data or only those which deviate from the default settings are output via the V24 interface.

UPLOAD_MD_CHANGES_ONLY = 1
Only those data which deviate from the default are output.
UPLOAD_MD_CHANGES_ONLY = 0
All data are output.

If a value has been changed in a data which is stored as an array, then the entire MD array is always output
(e.g. MD 10000: AXCONF_MACHAX_NAME_TAB).

**Note**

It can be sensible to back-up only the altered machine data before upgrading the software in those cases where changes have been made to the machine data default values. This applies in particular to machine data classified as SIEMENS protection level 0.

**Loading of standard data**

Standard machine data can be loaded in a number of different ways.

- **Set switch S3 on NCU module to position 1 and initiate NCK reset** (re-initialization of the entire SRAM of the NCU module, all user data are lost)
- **MD 11200: INIT_MD** (load standard MD on “next” booting)

Certain input values in MD: INIT_MD allow various data areas to be loaded with default values on the next NCK booting. The machine data is displayed in HEX format. After MD: INIT_MD has been set, power ON must be initiated twice. The MD is activated on the 1st power ON.

On the 2nd power ON, the function is executed and the MD reset to the value “0”.

© Siemens AG 2004 All Rights Reserved

**Meaning of input values**

**Value “0”**
The stored machine data MD will be loaded during the next booting operation.
**Value “1”**
All MDs - with the exception of memory-configuring data - will be overwritten with default values during the next booting operation.
**Value “2”**
All memory-configuring MDs will be overwritten with default values during the next booting operation.
Memory-configuring MDs are described in:

**References:** /IAD/, Installation and Start-Up Guide, Memory Configuration

- MD 10010: ASSIGN_CHAN_TO_MODE_GROUP
- All machine data starting with “MM_”
  MD 18000 - 18999 (general MDs)
  MD 28000 - 28999 (channel-specific MDs)
  MD 38000 - 38999 (axis-specific MDs)

**Value “4”**
- All compile cycle MDs will be deleted during the next booting operation.

**Note**

The drive machine data described in the following section are significant for SINUMERIK 840D and 810D. For control parameters of analog drives with regard to SINUMERIK FM-NC, please refer to:

**References:** /IAA/, Simodrive 611A, Installation and Start-Up Guide

© Siemens AG 2004 All Rights Reserved

# 2.2 Drive machine data

The display of the machine data has been extended in SW Version 4 and higher. **Display filters** and **System** have been newly introduced.

**Display filters**

The quantity of machine data displayed on the operator panel can be limited to the machine data of interest by means of the display filters. Machine data are displayed on the operator panel if at least one of the filters indicated in the respective machine data has been activated by the user or if the mode “All machine data“ has been set. The short descriptions of the filters indicated are used again in the operator interface for filter activation. They have the following meaning:

- D01 Controller data
- D02 Monitoring / limitations
- D03 Message data
- D04 Status data
- D05 Motor / power section
- D06 Measuring system
- D07 Safety Integrated
- D08 Standard machine
- EXP Expert mode

**System**

The following is indicated for system:

| | |
|---|---|
| 810D | if machine data is relevant only for 810D systems |
| 840D | if machine data is relevant only for 840D systems |
| Nothing | if machine data is valid for both systems |

**Note**

For machine data of control unit Performance 2 [P2], the unit(s) are displayed together with the filter in line 2 column 1. In line 3 and following, the system to which the line applies is stated in column 1. The identifier, name and values are stated several times possibly with the extensions ROT: LIN: and mark the differences between rotary motors and linear motors.

| **MD-Number** | **Identifier** | | | | | **Cross reference** | |
|---|---|---|---|---|---|---|---|
| Display filters | Meaning | | | Type | Rot/Lin | Protection | **System** |
| Unit | Default | Minimum | Maximum | Data type | | Active | |

| **1000** | **CURRCTRL_CYCLE_TIME** | | | | CR: **DS1** | |
|---|---|---|---|---|---|---|
| D01, D05, EXP<br>31,25 µs | Current controller cycle | | | MSD SLM FDD | 2/4 | |
| HW:P2 | - | - | - | UNS.WORD | Power On | |
| HW:P2 840D | 4 | 1 | 4 | UNS.WORD | Power On | |
| HW:P2 810D | 5 | 2 | 5 | UNS.WORD | Power On | |

© Siemens AG 2004 All Rights Reserved

| 1000 | CURRCTRL_CYCLE_TIME | | | | | CR: / DS1/ | |
|---|---|---|---|---|---|---|---|
| | Current controller cycle | | | FDD/MSD | | 2/4 | 810D |
| 31.25 us | 5 | 2 | 8 | UNS. WORD | | PowerOn | |

| 1000 | CURRCTRL_CYCLE_TIME | | | | | CR: / DS1 / | |
|---|---|---|---|---|---|---|---|
| D01, D05, EXP | Current controller cycle | | | FDD/MSD | ROT/LIN | 2/4 | 840D |
| 31.25 us | 4 | 2 | 4 | UNS. WORD | | PowerOn | |

| 1001 | SPEEDCTRL_CYCLE_TIME | | | | CR: DD2 | |
|---|---|---|---|---|---|---|
| D01, D05, EXP<br>31,25 µs | Speed controller cycle | | | MSD SLM FDD | 2/4 | |
| HW:P2 | - | - | - | UNS.WORD | Power On | |
| HW:P2 840D | 4 | 1 | 16 | UNS.WORD | Power On | |
| HW:P2 810D | 10 | 2 | 40 | UNS.WORD | Power On | |

| 1001 | SPEEDCTRL_CYCLE_TIME | | | | | CR: / DD2/ | |
|---|---|---|---|---|---|---|---|
| | Speed controller cycle | | | FDD/MSD | | 2/4 | 810D |
| 31.25 us | 10 | 2 | 32 | UNS. WORD | | PowerOn | |

| 1001 | SPEEDCTRL_CYCLE_TIME | | | | | CR: / DD2 / | |
|---|---|---|---|---|---|---|---|
| D01, D05, EXP | Speed controller cycle | | | FDD/MSD | ROT/LIN | 2/4 | 840D |
| 31.25 us | 4 | 2 | 16 | UNS. WORD | | PowerOn | |

| 1002 | MONITOR_CYCLE_TIME | | | | CR: DB1 | |
|---|---|---|---|---|---|---|
| D02, D05, EXP<br>31,25 µs | Monitoring cycle | | | MSD SLM FDD | 2/4 | |
| HW:P2 | 3200 | 128 | 3200 | UNS.WORD | Power On | |

| 1002 | MONITOR_CYCLE_TIME | | | | | CR: / DB1/ | |
|---|---|---|---|---|---|---|---|
| | Monitoring cycle | | | FDD/MSD | | 2/4 | 810D |
| 31.25 us | 640 | 128 | 3200 | UNS. WORD | | PowerOn | |

| 1002 | MONITOR_CYCLE_TIME | | | | | CR: / DB1 / | |
|---|---|---|---|---|---|---|---|
| D05, D02, EXP | Monitoring cycle | | | FDD/MSD | ROT/LIN | 2/4 | 840D |
| 31.25 us | 3200 | 128 | 3200 | UNS. WORD | | PowerOn | |

| 1003 | STS_CONFIG | | | | CR: DS1 | |
|---|---|---|---|---|---|---|
| EXP<br>- | Configuration STS | | | MSD SLM FDD | 0/0 | |
| HW:P2 | 0x0330 | 0x0000 | 0x07f0 | UNS.WORD | Power On | |

| 1003 | STS_CONFIG | | | | | CR: / DS1/ | |
|---|---|---|---|---|---|---|---|
| | Configuration STS | | | FDD/MSD | | 2/4 | 810D |
| - | 330 | 0 | ffff | UNS. WORD | | PowerOn | |

| 1003 | STS_CONFIG | | | | | CR: / DS1 / | |
|---|---|---|---|---|---|---|---|
| EXP | Configuration STS | | | FDD/MSD | ROT/LIN | 0/0 | 840D |
| - | 330 | 0 | 7f0 | UNS. WORD | | PowerOn | |

| 1004 | CTRL_CONFIG | | | | CR: DD2 | |
|---|---|---|---|---|---|---|
| EXP<br>- | Configuration structure | | | MSD SLM FDD | 2/4 | |
| HW:P2 | 0x0000 | 0x0000 | 0x3115 | UNS.WORD | Power On | |

| 1004 | CTRL_CONFIG | | | | | CR: / DD2 / | |
|---|---|---|---|---|---|---|---|
| EXP | Configuration structure (not 810D) | | | FDD/MSD | ROT/LIN | 2/4 | 840D |
| - | 0 | 0 | 2115 | UNS. WORD | | PowerOn | |

© Siemens AG 2004 All Rights Reserved

| 1005 | ENC_RESOL_MOTOR | | | | CR: DG1, DM1 | |
|---|---|---|---|---|---|---|
| D06<br>- | Motor measuring system encoder increments | | | MSD SLM FDD | 2/4 | |
| HW:P2 | 2048 | 1 | 65535 | UNS.WORD | Power On | |

| 1005 | ENC_RESOL_MOTOR | | | | | CR: / DG1, DM1/ | |
|---|---|---|---|---|---|---|---|
| | Motor measuring system encoder increments | | | FDD/MSD | | 2/4 | 810D |
| - | 2048 | 1 | 8192 | UNS. WORD | | PowerOn | |

| 1005 | ENC_RESOL_MOTOR | | | | | CR: / DG1, DM1 / | |
|---|---|---|---|---|---|---|---|
| D06 | Motor measuring system encoder increments | | | FDD/MSD | ROT/LIN | 2/4 | 840D |
| - | 2048 | 1 | 65535 | UNS. WORD | | PowerOn | |

| 1007 | ENC_RESOL_DIRECT | | | | CR: DG1 | |
|---|---|---|---|---|---|---|
| D06<br>- | Encoder increments of the direct measuring system | | | MSD SLM FDD | 2/4 | |
| HW:P2 | 0 | 0 | 2147483647 | UNS.DWORD | Power On | |

| 1007 | ENC_RESOL_DIRECT | | | | | CR: / DG1/ | |
|---|---|---|---|---|---|---|---|
| | Encoder increments of the direct measuring system | | | FDD/MSD | | 2/4 | 810D |
| - | 0 | 0 | 65535 | UNS. WORD | | PowerOn | |

| 1007 | ENC_RESOL_DIRECT | | | | | CR: / DG1 / | |
|---|---|---|---|---|---|---|---|
| D06 | Encoder increments of the direct measuring system | | | FDD/MSD | ROT/LIN | 2/4 | 840D |
| - | 0 | 0 | 2147483647 | UNS. DWORD | | PowerOn | |

| 1008 | ENC_PHASE_ERROR_CORRECTION | | | | CR: DG1 | |
|---|---|---|---|---|---|---|
| D06, EXP<br>Degrees | Encoder phase error compensation IM | | | MSD SLM FDD | 2/4 | |
| HW:P2 | 0.000000 | -20.000000 | 20.000000 | FLOAT | Immediately | |

| 1008 | ENC_PHASE_ERROR_CORRECTION | | | | | CR: / DG1 / | |
|---|---|---|---|---|---|---|---|
| EXP, D06 | Encoder phase error compensation IM | | | FDD/MSD | ROT/LIN | 2/4 | |
| degrees | 0.0000 | -20.0000 | 20.0000 | FLOAT | | immediately | |

| 1011 | ACTUAL_VALUE_CONFIG | | | | CR: DG1 | |
|---|---|---|---|---|---|---|
| D06<br>- | Configuration of the actual value sensing IM | | | MSD SLM FDD | 2/4 | |
| HW:P2 | 0x0000 | 0x0000 | 0xf1ff | UNS.WORD | Power On | |

| 1011 | ACTUAL_VALUE_CONFIG | | | | | CR: / DG1/ | |
|---|---|---|---|---|---|---|---|
| | Configuration of the actual value sensing IM | | | FDD/MSD | | 2/4 | 810D |
| - | 0 | 0 | ffff | UNS. WORD | | PowerOn | |

| 1011 | ACTUAL_VALUE_CONFIG | | | | | CR: / DG1 / | |
|---|---|---|---|---|---|---|---|
| D06 | Configuration of the actual value sensing IM | | | FDD/MSD | ROT/LIN | 2/4 | 840D |
| - | 0 | 0 | f1ff | UNS. WORD | | PowerOn | |

| 1012 | FUNC_SWITCH | | | | CR: DB1 | |
|---|---|---|---|---|---|---|
| D01, D02, D03<br>- | Function switch | | | MSD SLM FDD | 2/4 | |
| HW:P2 | 0x0004 | 0x0000 | 0x00b5 | UNS.WORD | Immediately | |

| 1012 | FUNC_SWITCH | | | | CR: / DB1/ | |
|---|---|---|---|---|---|---|
| | Function switch | | | FDD/MSD | 2/4 | 810D |
| - | 4<br>HSA: c | 0 | ffff | UNS. WORD | immediately | |

| 1012 | FUNC_SWITCH | | | | | CR: / DB1 / | |
|---|---|---|---|---|---|---|---|
| D01, D02, D03 | Function switch | | | FDD/MSD | ROT/LIN | 2/4 | 840D |
| - | 0 | 0 | b5 | UNS. WORD | | immediately | |

© Siemens AG 2004 All Rights Reserved

| 1013 | ENABLE_STAR_DELTA | | | | | CR: DE1 | |
|---|---|---|---|---|---|---|---|
| D05<br>- | Enable star/delta changeover | | | MSD | | 2/4 | |
| HW:P2 | 0 | 0 | 7 | UNS.WORD | | Power On | |

| 1013 | ENABLE_STAR_DELTA | | | | | CR: /DE1 / | |
|---|---|---|---|---|---|---|---|
| D05 | Enable star/delta changeover (not 810D) | | | MSD | ROT | 2/4 | 840D |
| - | 0 | 0 | 7 | UNS. WORD | | PowerOn | |

| 1014 | UF_MODE_ENABLE | | | | CR: DE1 | |
|---|---|---|---|---|---|---|
| D04<br>- | Activate V/f operation | | | MSD SLM FDD | 2/4 | |
| HW:P2 | 0 | 0 | 1 | UNS.WORD | Power On | |

| 1014 | UF_MODE_ENABLE | | | | | CR: / DE1 / | |
|---|---|---|---|---|---|---|---|
| EXP, D04 | Activate V/f operation (not 810D) | | | FDD/MSD | ROT/LIN | 2/4 | 840D |
| - | 0 | 0 | 1 | UNS. WORD | | PowerOn | |

| 1015 | PEMSD_MODE_ENABLE | | | | CR: DE1 | |
|---|---|---|---|---|---|---|
| -<br>- | Activate PE-MSD | | | SLM FDD | 2/4 | |
| HW:P2 | 0 | 0 | 1 | UNS.WORD | Power On | |

| 1015 | PEMSD_MODE_ENABLE | | | | | CR: / DE1 / | |
|---|---|---|---|---|---|---|---|
| - | Activate PE-MSD (not 810D) | | | FDD | ROT/LIN | 2/4 | 840D |
| - | 0 | 0 | 1 | UNS. WORD | | PowerOn | |

| 1016 | COMMUTATION_ANGLE_OFFSET | | | | CR: DL1 | |
|---|---|---|---|---|---|---|
| -<br>Degrees | Commutating angle offset | | | SLM FDD | 2/4 | |
| HW:P2 | 0.000000 | -360.000000 | 360.000000 | FLOAT | Power On | |

| 1016 | COMMUTATION_ANGLE_OFFSET | | | | | CR: / DL1 / | |
|---|---|---|---|---|---|---|---|
| - | Commutating angle offset (not 810D) | | | FDD | ROT/LIN | 2/4 | 840D |
| degrees | 0.0000 | -360.0000 | 360.0000 | FLOAT | | PowerOn | |

| 1017 | STARTUP_ASSISTANCE | | | | CR: DL1 | |
|---|---|---|---|---|---|---|
| D04<br>- | Setting-up aid | | | SLM FDD | 2/4 | |
| HW:P2 | 0 | -1 | 1 | WORD | Immediately | |

| 1017 | STARTUP_ASSISTANCE | | | | | CR: / DL1 / | |
|---|---|---|---|---|---|---|---|
| D04 | Setting-up aid (not 810D) | | | FDD | ROT/LIN | 2/4 | 840D |
| - | 0 | -1 | 1 | WORD | | immediately | |

| 1019 | CURRENT_ROTORPOS_IDENT | | | | CR: DM1, DL1 | |
|---|---|---|---|---|---|---|
| -<br>% | Current rotor position identification | | | SLM FDD | 2/4 | |
| HW:P2 | ROT: 50.000000<br>LIN: 12.000000 | 0.000000 | 100.000000 | FLOAT | Immediately | |

| 1019 | CURRENT_ROTORPOS_IDENT | | | | | CR: /DM1 / | |
|---|---|---|---|---|---|---|---|
| - | Current rotor position identification (not 810D) | | | FDD | ROT | 2/4 | 840D |
| % | 50.0000 | 0.0000 | 100.0000 | FLOAT | | immediately | |

| 1019 | CURRENT_ROTORPOS_IDENT | | | | | CR: / DL1/ | |
|---|---|---|---|---|---|---|---|
| - | Current rotor position identification (not 810D) | | | FDD | LIN | 2/4 | 840D |
| % | 12.0000 | 0.0000 | 100.0000 | FLOAT | | immediately | |

© Siemens AG 2004 All Rights Reserved

| 1020 | ROT: MAX_TURN_ROTORPOS_IDENT<br>LIN: MAX_MOVE_ROTORPOS_IDENT | | | | CR: DM1, DL1 | |
|---|---|---|---|---|---|---|
| -<br>ROT: Degrees<br>LIN: mm | ROT: Maximum rotation of rotor position identification<br>LIN: Maximum move of rotor position identification | | | SLM FDD | 2/4 | |
| HW:P2 | ROT: 10.000000<br>LIN: 5.000000 | 0.000000 | ROT:<br>90.000000<br>LIN: 30.000000 | FLOAT | Immediately | |

| 1020 | MAX_MOVE_ROTORPOS_IDENT | | | | | CR: / DL1/ | |
|---|---|---|---|---|---|---|---|
| - | Maximum move of rotor position identification (not 810D) | | | FDD | LIN | 2/4 | 840D |
| mm | 5.0000 | 0.0000 | 30.0000 | FLOAT | | immediately | |

| 1020 | MAX_TURN_ROTORPOS_IDENT | | | | | CR: /DM1 / | |
|---|---|---|---|---|---|---|---|
| - | Maximum rotation of rotor position identification (not 810D) | | | FDD | ROT | 2/4 | 840D |
| degrees | 10.0000 | 0.0000 | 90.0000 | FLOAT | | immediately | |

| 1021 | ENC_ABS_TURNS_MOTOR | | | | CR: DG1 | |
|---|---|---|---|---|---|---|
| D06<br>- | Multiturn resolution absolute value encoder motor | | | MSD SLM FDD | 2/4 | |
| HW:P2 | 4096 | 0 | 65535 | UNS.WORD | Power On | |

| 1021 | ENC_ABS_TURNS_MOTOR | | | | | CR: / DG1 / | |
|---|---|---|---|---|---|---|---|
| D06 | Multiturn resolution absolute value encoder motor | | | FDD/MSD | ROT/LIN | 2/4 | |
| - | 4096 | 0 | 65535 | UNS. WORD | | PowerOn | |

| 1022 | ENC_ABS_RESOL_MOTOR | | | | CR: DG1 | |
|---|---|---|---|---|---|---|
| D06<br>- | Measuring steps of the motor absolute track | | | MSD SLM FDD | 2/4 | |
| HW:P2 | 8192 | 0 | 2147483647 | UNS.DWORD | Power On | |

| 1022 | ENC_ABS_RESOL_MOTOR | | | | | CR: / DG1/ | |
|---|---|---|---|---|---|---|---|
| | Measuring steps of the motor absolute track | | | FDD/MSD | | 2/4 | 810D |
| - | 8192 | 512 | 65535 | UNS. WORD | | PowerOn | |

| 1022 | ENC_ABS_RESOL_MOTOR | | | | | CR: / DG1 / | |
|---|---|---|---|---|---|---|---|
| D06 | Measuring steps of the motor absolute track | | | FDD/MSD | ROT/LIN | 2/4 | 840D |
| - | 8192 | 0 | 2147483647 | UNS. DWORD | | PowerOn | |

| 1023 | ENC_ABS_DIAGNOSIS_MOTOR | | | | CR: DG1 | |
|---|---|---|---|---|---|---|
| D06<br>- | Diagnosis measuring circuit motor absolute track | | | MSD SLM FDD | 2/4 | |
| HW:P2 | 0 | 0 | 49151 | UNS.WORD | Immediately | |

| 1023 | ENC_ABS_DIAGNOSIS_MOTOR | | | | | CR: / DG1/ | |
|---|---|---|---|---|---|---|---|
| | Diagnosis measuring circuit motor absolute track | | | FDD/MSD | | 2/4 | 810D |
| - | 0 | 0 | 65535 | UNS. WORD | | immediately | |

| 1023 | ENC_ABS_DIAGNOSIS_MOTOR | | | | | CR: / DG1 / | |
|---|---|---|---|---|---|---|---|
| D06 | Diagnosis measuring circuit motor absolute track | | | FDD/MSD | ROT/LIN | 2/4 | 840D |
| - | 0 | 0 | 49151 | UNS. WORD | | immediately | |

| 1024 | DIVISION_LIN_SCALE | | | | CR: , DG1, DL1 | |
|---|---|---|---|---|---|---|
| -<br>nm | Grid spacing motor measuring system | | | SLM FDD | 2/4 | |
| HW:P2 | 20000 | 0 | 2147483647 | UNS.DWORD | Power On | |

| 1024 | DIVISION_LIN_SCALE | | | | | CR: / DL1/ | |
|---|---|---|---|---|---|---|---|
| - | Grid spacing, motor measuring system (not 810D) | | | FDD | LIN | 2/4 | 840D |
| Nm | 20000 | 0 | 2147483647 | UNS. DWORD | | PowerOn | |

© Siemens AG 2004 All Rights Reserved

| 1025 | SERIAL_NO_ENCODER | | | | CR: DG1 | |
|---|---|---|---|---|---|---|
| D06, EXP<br>- | Serial number motor measuring system | | | MSD SLM FDD | 1/1 | |
| HW:P2 | 0 | 0 | 4294967295 | UNS.DWORD | Power On | |

| 1025 | SERIAL_NO_ENCODER | | | | | CR: / DG1 / | |
|---|---|---|---|---|---|---|---|
| D06, EXP | Serial number motor measuring system (not 810D) | | | FDD/MSD | ROT/LIN | 1/1 | 840D |
| - | 0 | 0 | 2147483647 | UNS. DWORD | | PowerOn | |

| 1027 | ENC_CONFIG | | | | CR: DG1 | |
|---|---|---|---|---|---|---|
| D06<br>- | Configuration for encoder IM | | | MSD SLM FDD | 2/4 | |
| HW:P2 | 0x0000 | 0x0000 | 0xffff | UNS.WORD | Power On | |

| 1027 | ENC_CONFIG | | | | | CR: / DG1 / | |
|---|---|---|---|---|---|---|---|
| D06 | Configuration for encoder IM (not 810D) | | | FDD/MSD | ROT/LIN | 2/4 | 840D |
| - | 0 | 0 | ffff | UNS. WORD | | PowerOn | |

| 1028 | NO_TRANSMISSION_BITS | | | | CR: DG1 | |
|---|---|---|---|---|---|---|
| D06<br>- | IM frame langth SSI | | | MSD SLM FDD | 2/4 | |
| HW:P2 | 25 | 0 | 25 | UNS.WORD | Power On | |

| 1028 | NO_TRANSMISSION_BITS | | | | | CR: / DG1 / | |
|---|---|---|---|---|---|---|---|
| D06 | IM frame langth SSI (not 810D) | | | FDD/MSD | ROT/LIN | 2/4 | 840D |
| - | 25 | 0 | 25 | UNS. WORD | | PowerOn | |

| 1029 | DELAY_ROTORPOS_IDENT | | | | CR: FBU | |
|---|---|---|---|---|---|---|
| -<br>ms | Meas. delay rotor position identification | | | SLM FDD | 2/4 | |
| HW:P2 | 0 | 0 | 100.0 | FLOAT | Immediately | |

| 1029 | DELAY_ROTORPOS_IDENT | | | | | CR: / FBU / | |
|---|---|---|---|---|---|---|---|
| - | Meas. delay rotor position identification (not 810D) | | | FDD | ROT/LIN | 2/4 | 840D |
| ms | 0.0000 | 0.0000 | 100.0000 | FLOAT | | immediately | |

| 1030 | ACTUAL_VALUE_CONFIG_DIRECT | | | | CR: DG1 | |
|---|---|---|---|---|---|---|
| D06<br>- | Configuration actual-value sensing DM | | | MSD SLM FDD | 2/4 | |
| HW:P2 | 0x0000 | 0x0000 | 0xc018 | UNS.WORD | Power On | |

| 1030 | ACTUAL_VALUE_CONFIG_DIRECT | | | | | CR: / DG1/ | |
|---|---|---|---|---|---|---|---|
| | Configuration actual-value sensing DM | | | FDD/MSD | | 2/4 | 810D |
| - | 0 | 0 | ffff | UNS. WORD | | PowerOn | |

| 1030 | ACTUAL_VALUE_CONFIG_DIRECT | | | | | CR: / DG1 / | |
|---|---|---|---|---|---|---|---|
| D06 | Configuration actual-value sensing DM | | | FDD/MSD | ROT/LIN | 2/4 | 840D |
| - | 0 | 0 | c018 | UNS. WORD | | PowerOn | |

| 1031 | ENC_ABS_TURNS_DIRECT | | | | CR: DG1 | |
|---|---|---|---|---|---|---|
| D06<br>- | Multiturn resolution of the absolute encoder DM | | | MSD SLM FDD | 2/4 | |
| HW:P2 | 4096 | 0 | 65535 | UNS.WORD | Power On | |

| 1031 | ENC_ABS_TURNS_DIRECT | | | | | CR: / DG1 / | |
|---|---|---|---|---|---|---|---|
| D06 | Multiturn resolution of the absolute encoder DM | | | FDD/MSD | ROT/LIN | 2/4 | |
| - | 4096 | 0 | 65535 | UNS. WORD | | PowerOn | |

© Siemens AG 2004 All Rights Reserved

| 1032 | ENC_ABS_RESOL_DIRECT | | | | | CR: DG1 | |
|---|---|---|---|---|---|---|---|
| D06<br>- | Measuring steps of the absolute track DM | | | MSD SLM FDD | | 2/4 | |
| HW:P2 | 8192 | 0 | 2147483647 | UNS.DWORD | | Power On | |

| 1032 | ENC_ABS_RESOL_DIRECT | | | | | CR: / DG1/ | |
|---|---|---|---|---|---|---|---|
| | Measuring steps of the absolute track DM | | | FDD/MSD | | 2/4 | 810D |
| - | 8192 | 0 | 65535 | UNS. WORD | | PowerOn | |

| 1032 | ENC_ABS_RESOL_DIRECT | | | | | CR: / DG1 / | |
|---|---|---|---|---|---|---|---|
| D06 | Measuring steps of the absolute track DM | | | FDD/MSD | ROT/LIN | 2/4 | 840D |
| - | 8192 | 0 | 2147483647 | UNS. DWORD | | PowerOn | |

| 1033 | ENC_ABS_DIAGNOSIS_DIRECT | | | | | CR: DG1 | |
|---|---|---|---|---|---|---|---|
| D06<br>- | Diagnosis dir. measuring system absolute track | | | MSD SLM FDD | | 2/4 | |
| HW:P2 | 0 | 0 | 64767 | UNS.WORD | | Immediately | |

| 1033 | ENC_ABS_DIAGNOSIS_DIRECT | | | | | CR: / DG1/ | |
|---|---|---|---|---|---|---|---|
| | Diagnosis dir. measuring system absolute track | | | FDD/MSD | | 2/4 | 810D |
| - | 0 | 0 | 65535 | UNS. WORD | | immediately | |

| 1033 | ENC_ABS_DIAGNOSIS_DIRECT | | | | | CR: / DG1 / | |
|---|---|---|---|---|---|---|---|
| D06 | Diagnosis dir. measuring system absolute track | | | FDD/MSD | ROT/LIN | 2/4 | 840D |
| - | 0 | 0 | 64767 | UNS. WORD | | immediately | |

| 1034 | DIVISION_LIN_SCALE_DM | | | | | CR: , DL1 | |
|---|---|---|---|---|---|---|---|
| -<br>nm | Grid spacing direct measuring system | | | SLM FDD | | 2/4 | |
| HW:P2 | 20000 | 0 | 2147483647 | UNS.DWORD | | Power On | |

| 1034 | DIVISION_LIN_SCALE_DM | | | | | CR: / DL1/ | |
|---|---|---|---|---|---|---|---|
| - | Grid spacing, direct measuring system (not 810D) | | | FDD | LIN | 2/4 | 840D |
| Nm | 20000 | 0 | 2147483647 | UNS. DWORD | | PowerOn | |

| 1037 | ENC_CONFIG_DIRECT | | | | | CR: DG1 | |
|---|---|---|---|---|---|---|---|
| D06<br>- | Configuration for encoder DM | | | MSD SLM FDD | | 2/4 | |
| HW:P2 | 0x0000 | 0x0000 | 0xffff | UNS.WORD | | Power On | |

| 1037 | ENC_CONFIG_DIRECT | | | | | CR: / DG1 / | |
|---|---|---|---|---|---|---|---|
| D06 | Configuration for encoder DM (not 810D) | | | FDD/MSD | ROT/LIN | 2/4 | 840D |
| - | 0 | 0 | ffff | UNS. WORD | | PowerOn | |

| 1038 | SERIAL_NO_ENCODER_DM | | | | | CR: DG1 | |
|---|---|---|---|---|---|---|---|
| D06, EXP<br>- | Serial no. for direct meas. System | | | MSD SLM FDD | | 1/1 | |
| HW:P2 | 0 | 0 | 4294967295 | UNS.DWORD | | Power On | |

| 1038 | SERIAL_NO_ENCODER_DM | | | | | CR: / DG1 / | |
|---|---|---|---|---|---|---|---|
| D06, EXP | Serial no. for direct meas. System (not 810D) | | | FDD/MSD | ROT/LIN | 1/1 | 840D |
| - | 0 | 0 | 2147483647 | UNS. DWORD | | PowerOn | |

| 1041 | NO_TRANSMISSION_BITS_DM | | | | | CR: DG1 | |
|---|---|---|---|---|---|---|---|
| D06<br>- | DM frame length SSI | | | MSD SLM FDD | | 2/4 | |
| HW:P2 | 25 | 0 | 25 | UNS.WORD | | Power On | |

| 1041 | NO_TRANSMISSION_BITS_DM | | | | | CR: / DG1 / | |
|---|---|---|---|---|---|---|---|
| D06 | DM frame length SSI (not 810D) | | | FDD/MSD | ROT/LIN | 2/4 | 840D |
| - | 25 | 0 | 25 | UNS. WORD | | PowerOn | |

© Siemens AG 2004 All Rights Reserved

| 1049 | EMF_BREAK_ENABLE | | | | CR: | |
|---|---|---|---|---|---|---|
| -<br>- | Activate EMF brake | | | MSD SLM FDD | 0/0 | |
| HW:P2 | 0 | 0 | 2 | UNS.WORD | Power On | |

| 1060 | ACTIVATE_BRAKE_CONTROL | | | | CR: | |
|---|---|---|---|---|---|---|
| D02<br>- | Activation of brake control | | | MSD SLM FDD | 2/4 | |
| HW:P2 840D | 0 | 0 | 1 | UNS.WORD | Immediately | |

| 1061 | BRAKE_RELEASE_TIME | | | | CR: | |
|---|---|---|---|---|---|---|
| D02<br>ms | Brake release time | | | MSD SLM FDD | 2/4 | |
| HW:P2 840D | 600.000000 | 10.000000 | 10000.000000 | FLOAT | Immediately | |

| 1062 | BREAK_CLOSE_SPEED | | | | CR: | |
|---|---|---|---|---|---|---|
| D02<br>ROT: 1/min<br>LIN: m/min | Speed close holding brake | | | MSD SLM FDD | 2/4 | |
| HW:P2 840D | ROT: 500.000000<br>LIN: 10.000000 | 0.000000 | 100000.000000 | FLOAT | Immediately | |

| 1063 | BRAKE_DELAY_TIME | | | | CR: | |
|---|---|---|---|---|---|---|
| D02<br>ms | Brake delay time | | | MSD SLM FDD | 2/4 | |
| HW:P2 840D | 400.000000 | 10.000000 | 600000.000000 | FLOAT | Immediately | |

| 1064 | CONTROLLER_DISABLE_TIME | | | | CR: | |
|---|---|---|---|---|---|---|
| D02<br>ms | Servo disable time | | | MSD SLM FDD | 2/4 | |
| HW:P2 840D | 600.000000 | 10.000000 | 10000.000000 | FLOAT | Immediately | |

| 1075 | ALGORITHM_ROTORPOS_IDENT | | | | CR: **IAD, DM1** | |
|---|---|---|---|---|---|---|
| -<br>- | Rotor position identification procedure | | | FDD SLM | 1/1 | |
| HW:P2 | 1 | 1 | 5 | UNS.WORD | Immediately | |

| 1075 | ALGORITHM_ROTORPOS_IDENT | | | | | CR: **/ IAD, DM1 /** | |
|---|---|---|---|---|---|---|---|
| - | Rotor position identification procedure (not 810D) | | | FDD | ROT/LIN | 1/1 | **840D** |
| - | 1 | 1 | 3 | UNS. WORD | | immediately | |

| 1076 | ROT: FACTOR_INERTIA<br>LIN: FACTOR_MASS | | | | CR: **DM1, DL1** | |
|---|---|---|---|---|---|---|
| D05<br>ROT: kgm²<br>LIN: kg | ROT: Load moment of inertia factor<br>LIN: Load mass factor | | | FDD SLM | 1/1 | |
| HW:P2 | 0.0 | 0.0 | ROT: 500.0<br>LIN: 10000.0 | FLOAT | Immediately | |

| 1076 | FACTOR_INERTIA | | | | | CR: **/DM1 /** | |
|---|---|---|---|---|---|---|---|
| D05 | Load moment of inertia factor (not 810D) | | | FDD | ROT | 1/1 | **840D** |
| kgm² | 0.0000 | 0.0000 | 500.0000 | FLOAT | | immediately | |

| 1076 | FACTOR_MASS | | | | | CR: **/ DL1/** | |
|---|---|---|---|---|---|---|---|
| D05 | Load mass factor (not 810D) | | | FDD | LIN | 1/1 | **840D** |
| kg | 0.0000 | 0.0000 | 10000.0000 | FLOAT | | immediately | |

| 1077 | RLI_INTEGRATOR_TIME | | | | CR: **DM!** | |
|---|---|---|---|---|---|---|
| -<br>ms | Integral action time for RLI controller | | | FDD SLM | 1/1 | |
| HW:P2 | 3.7 | 0.0 | 500.0 | FLOAT | Immediately | |

© Siemens AG 2004 All Rights Reserved

| 1077 | RLI_INTEGRATOR_TIME | | | | | CR: / / | |
|---|---|---|---|---|---|---|---|
| - | Integral action time for RLI controller (not 810D) | | | FDD | ROT/LIN | 1/1 | 840D |
| ms | 3.7000 | 0.0000 | 500.0000 | FLOAT | | immediately | |

| 1078 | MAX_TIME_ROTORPOS_ID | | | | CR: DM1 |
|---|---|---|---|---|---|
| -<br>ms | Time monitoring of rotor position ID | | | FDD SLM | 1/1 |
| HW:P2 | 800.0 | 100.0 | 10000.0 | FLOAT | Immediately |

| 1078 | MAX_TIME_ROTORPOS_ID | | | | | CR: / / | |
|---|---|---|---|---|---|---|---|
| - | Time monitoring of rotor position ID (not 810D) | | | FDD | ROT/LIN | 1/1 | 840D |
| ms | 800.0000 | 100.0000 | 10000.0000 | FLOAT | | immediately | |

| 1098 | INVERTER_MAX_CURR_DERAT | | | | CR: DM1 |
|---|---|---|---|---|---|
| D05<br>A | PS derating limit current | | | MSD SLM FDD | 2/4 |
| HW:P2 | 200.0 | 0.0 | 500.0 | FLOAT | Immediately |

| 1098 | INVERTER_MAX_CURR_DERAT | | | | | CR: / DM1 / | |
|---|---|---|---|---|---|---|---|
| D05 | PS derating limit current (not 810D) | | | FDD/MSD | ROT/LIN | 2/4 | 840D |
| A | 200.0000 | 0.0000 | 500.0000 | FLOAT | | immediately | |

| 1099 | INVERTER_DERATING_FACT | | | | CR: DE1, DM1 |
|---|---|---|---|---|---|
| D05<br>% | PS limit current derating factor | | | MSD SLM FDD | 2/4 |
| HW:P2 | 0.000000 | 0.000000 | 100.000000 | FLOAT | Immediately |

| 1099 | INVERTER_DERATING_FACT | | | | | CR: / DE1, DM1 / | |
|---|---|---|---|---|---|---|---|
| D05 | PS limit current derating factor (not 810D) | | | FDD/MSD | ROT/LIN | 2/4 | 840D |
| % | 0.0000 | 0.0000 | 100.0000 | FLOAT | | immediately | |

| 1100 | PWM_FREQUENCY | | | | CR: DS1 |
|---|---|---|---|---|---|
| D01, D05, EXP<br>Hz | Pulse-width modulation frequency | | | MSD SLM FDD | 2/4 |
| HW:P2 | 4000.000000 | 2000.000000 | 8000.000000 | FLOAT | Power On |

| 1100 | PWM_FREQUENCY | | | | | CR: / DS1 / | |
|---|---|---|---|---|---|---|---|
| D01, D05, EXP | Pulse-width modulation frequency (not 810D) | | | FDD/MSD | ROT/LIN | 2/4 | 840D |
| Hz | 4000.0000<br>HSA: 3200.0000 | 2000.0000 | 8000.0000 | FLOAT | | PowerOn | |

| 1101 | CTRLOUT_DELAY | | | | CR: DS1 |
|---|---|---|---|---|---|
| D01, D05, EXP<br>µs | Computation deadtime of the current control loop | | | MSD SLM FDD | 2/4 |
| HW:P2 | - | 0 | 124 | WORD | Power On |
| HW:P2 840D | 32 | - | - | WORD | Power On |
| HW:P2 810D | 110 | - | - | WORD | Power On |

| 1101 | CTRLOUT_DELAY | | | | | CR: / DS1 / | |
|---|---|---|---|---|---|---|---|
| D01, D05, EXP | Computation deadtime of the current control loop (not 810D) | | | FDD/MSD | ROT/LIN | 2/4 | 840D |
| us | 62 | 0 | 124 | WORD | | PowerOn | |

| 1102 | MOTOR_CODE | | | | CR: DM1 |
|---|---|---|---|---|---|
| D04<br>- | Motor code number | | | MSD SLM FDD | 2/4 |
| HW:P2 | 0 | 0 | 65535 | UNS.WORD | Power On |

| 1102 | MOTOR_CODE | | | | | CR: / DM1 / | |
|---|---|---|---|---|---|---|---|
| D04, D05 | Motor code number | | | FDD/MSD | ROT/LIN | 2/4 | |
| - | 0 | 0 | 65535 | UNS. WORD | | PowerOn | |

© Siemens AG 2004 All Rights Reserved

| 1103 | MOTOR_NOMINAL_CURRENT | | | | CR: DM1, DÜ1 |
|---|---|---|---|---|---|
| D05<br>A | Motor rated current | | | MSD SLM FDD | 2/4 |
| HW:P2 | 0.000000 | 0.000000 | 500.000000 | FLOAT | Power On |

| 1103 | MOTOR_NOMINAL_CURRENT | | | | | CR: / DM1, DÜ1 / |
|---|---|---|---|---|---|---|
| D05 | Motor rated current | | | FDD/MSD | ROT/LIN | 2/4 |
| A | 0.0000 | 0.0000 | 500.0000 | FLOAT | | PowerOn |

| 1104 | MOTOR_MAX_CURRENT | | | | CR: DM1, DÜ1 |
|---|---|---|---|---|---|
| D05<br>A | Maximum motor current | | | SLM FDD | 2/4 |
| HW:P2 | 0.040000 | 0.000000 | 500.000000 | FLOAT | Power On |

| 1104 | MOTOR_MAX_CURRENT | | | | | CR: / DM1, DÜ1/ |
|---|---|---|---|---|---|---|
| | Maximum motor current | | | FDD | | 2/4 **810D** |
| A | 0.0000 | 0.0000 | 500.0000 | FLOAT | | PowerOn |

| 1104 | MOTOR_MAX_CURRENT | | | | | CR: / DM1, DÜ1 / |
|---|---|---|---|---|---|---|
| D05 | Maximum motor current | | | FDD | ROT/LIN | 2/4 **840D** |
| A | 0.0400 | 0.0000 | 500.0000 | FLOAT | | PowerOn |

| 1105 | MOTOR_MAX_CURRENT_REDUCTION | | | | CR: DÜ1 |
|---|---|---|---|---|---|
| D02, D05<br>% | Reducing the maximum motor current | | | SLM FDD | 2/4 |
| HW:P2 | 100 | 0 | 100 | WORD | Immediately |

| 1105 | MOTOR_MAX_CURRENT_REDUCTION | | | | | CR: / DÜ1 / |
|---|---|---|---|---|---|---|
| D05, D02 | Reducing the maximum motor current | | | FDD | ROT/LIN | 2/4 |
| % | 100 | 0 | 100 | WORD | | immediately |

| 1106 | INVERTER_CODE | | | | CR: DM1 |
|---|---|---|---|---|---|
| D04<br>- | Power section code number | | | MSD SLM FDD | 2/4 |
| HW:P2 | 0x0000 | 0x0000 | 0xffff | UNS.WORD | Power On |

| 1106 | INVERTER_CODE | | | | | CR: / DM1 / |
|---|---|---|---|---|---|---|
| D05, D04 | Power section code number | | | FDD/MSD | ROT/LIN | 2/4 |
| - | 0 | 0 | ffff | UNS. WORD | | PowerOn |

| 1107 | INVERTER_MAX_CURRENT | | | | CR: DM1 |
|---|---|---|---|---|---|
| D05<br>A | Transistor limiting current | | | MSD SLM FDD | 2/4 |
| HW:P2 | 200.000000 | 1.000000 | 500.000000 | FLOAT | Power On |

| 1107 | INVERTER_MAX_CURRENT | | | | | CR: / DM1 / |
|---|---|---|---|---|---|---|
| D05 | Transistor limiting current | | | FDD/MSD | ROT/LIN | 2/4 |
| A | 200.0000 | 1.0000 | 500.0000 | FLOAT | | PowerOn |

| 1108 | INVERTER_MAX_THERMAL_CURR | | | | CR: DM1 |
|---|---|---|---|---|---|
| D05<br>A | Power module limiting current | | | MSD SLM FDD | 2/4 |
| HW:P2 | 200.000000 | 1.000000 | 500.000000 | FLOAT | Power On |

| 1108 | INVERTER_MAX_THERMAL_CURR | | | | | CR: / DM1 / |
|---|---|---|---|---|---|---|
| D05 | Power module limiting current | | | FDD/MSD | ROT/LIN | 2/4 |
| A | 200.0000 | 1.0000 | 500.0000 | FLOAT | | PowerOn |

| 1109 | INVERTER_MAX_S6_CURRENT | | | | CR: DM1 |
|---|---|---|---|---|---|
| D05<br>A | Power module limiting current S6 | | | MSD | 2/4 |
| HW:P2 | 200.000000 | 1.000000 | 500.000000 | FLOAT | Power On |

© Siemens AG 2004 All Rights Reserved

| 1109 | INVERTER_MAX_S6_CURRENT | | | | | CR: /DM1 / | |
|---|---|---|---|---|---|---|---|
| D05 | Power module limiting current S6 | | | MSD | ROT | 2/4 | |
| A | 200.0000 | 1.0000 | 500.0000 | FLOAT | | PowerOn | |

| 1111 | INVERTER_RATED_CURRENT | | | | CR: DM1 | |
|---|---|---|---|---|---|---|
| D05<br>A | Rated power module current | | | MSD SLM FDD | 2/4 | |
| HW:P2 | 200.000000 | 1.000000 | 500.000000 | FLOAT | Power On | |

| 1111 | INVERTER_RATED_CURRENT | | | | | CR: / DM1 / | |
|---|---|---|---|---|---|---|---|
| D05 | Rated power module current | | | FDD/MSD | ROT/LIN | 2/4 | |
| A | 200.0000 | 1.0000 | 500.0000 | FLOAT | | PowerOn | |

| 1112 | NUM_POLE_PAIRS | | | | CR: DM1 | |
|---|---|---|---|---|---|---|
| D05<br>- | Motor pole pair number | | | SLM FDD | 2/4 | |
| HW:P2 | 0 | 0 | 4096 | UNS.WORD | Power On | |

| 1112 | NUM_POLE_PAIRS | | | | | CR: / DM1/ | |
|---|---|---|---|---|---|---|---|
| | Motor pole pair number | | | FDD | | 2/4 | 810D |
| - | 0 | 0 | 4 | UNS. WORD | | PowerOn | |

| 1112 | NUM_POLE_PAIRS | | | | | CR: / DM1 / | |
|---|---|---|---|---|---|---|---|
| D05 | Motor pole pair number | | | FDD | ROT/LIN | 2/4 | 840D |
| - | 0 | 0 | 4096 | UNS. WORD | | PowerOn | |

| 1113 | ROT: TORQUE_CURRENT_RATIO<br>LIN: FORCE_CURRENT_RATIO | | | | CR: DM1, DL1 | |
|---|---|---|---|---|---|---|
| D05<br>ROT: Nm/A<br>LIN: N/A | ROT: Torque constant<br>LIN: Force constant | | | SLM FDD | 2/4 | |
| HW:P2 | 0.000000 | 0.000000 | ROT:<br>300.000000<br>LIN:<br>2000.000000 | FLOAT | Power On | |

| 1113 | TORQUE_CURRENT_RATIO | | | | | CR: / DM1/ | |
|---|---|---|---|---|---|---|---|
| | Torque constant | | | FDD | | 2/4 | 810D |
| Nm/A | 0.0000 | 0.0000 | 5.0000 | FLOAT | | PowerOn | |

| 1113 | TORQUE_CURRENT_RATIO | | | | | CR: /DM1 / | |
|---|---|---|---|---|---|---|---|
| D05 | Torque constant | | | FDD | ROT | 2/4 | 840D |
| Nm/A | 0.0000 | 0.0000 | 300.0000 | FLOAT | | PowerOn | |

| 1113 | FORCE_CURRENT_RATIO | | | | | CR: / DL1/ | |
|---|---|---|---|---|---|---|---|
| D05 | Force constant | | | FDD | LIN | 2/4 | 840D |
| N/A | 0.0000 | 0.0000 | 2000.0000 | FLOAT | | PowerOn | |

| 1114 | EMF_VOLTAGE | | | | CR: DM1, DL1 | |
|---|---|---|---|---|---|---|
| D05<br>ROT: V<br>LIN: Vs/m | Voltage constant | | | SLM FDD | 2/4 | |
| HW:P2 | 0.000000 | 0.000000 | 10000.000000 | FLOAT | Power On | |

| 1114 | EMF_VOLTAGE | | | | | CR: / DM1/ | |
|---|---|---|---|---|---|---|---|
| | Voltage constant | | | FDD | | 2/4 | 810D |
| V | 0.0000 | 0.0000 | 300.0000 | FLOAT | | PowerOn | |

| 1114 | EMF_VOLTAGE | | | | | CR: /DM1 / | |
|---|---|---|---|---|---|---|---|
| D05 | Voltage constant | | | FDD | ROT | 2/4 | 840D |
| V | 0.0000 | 0.0000 | 10000.0000 | FLOAT | | PowerOn | |

© Siemens AG 2004 All Rights Reserved

| 1114 | EMF_VOLTAGE | | | | | CR: / DL1/ | |
|---|---|---|---|---|---|---|---|
| D05 | Voltage constant | | | FDD | LIN | 2/4 | 840D |
| Vs/m | 0.0000 | 0.0000 | 10000.0000 | FLOAT | | PowerOn | |

| 1115 | ARMATURE_RESISTANCE | | | | CR: DM1 | |
|---|---|---|---|---|---|---|
| D05<br>Ohm | Armature resistance | | | SLM FDD | 2/4 | |
| HW:P2 | 0.000000 | 0.000000 | 1000.000000 | FLOAT | Power On | |

| 1115 | ARMATURE_RESISTANCE | | | | | CR: / DM1/ | |
|---|---|---|---|---|---|---|---|
| | Armature resistance | | | FDD | | 2/4 | 810D |
| ohm | 0.0000 | 0.0000 | 20.0000 | FLOAT | | PowerOn | |

| 1115 | ARMATURE_RESISTANCE | | | | | CR: / DM1 / | |
|---|---|---|---|---|---|---|---|
| D05 | Armature resistance | | | FDD | ROT/LIN | 2/4 | 840D |
| ohm | 0.0000 | 0.0000 | 1000.0000 | FLOAT | | PowerOn | |

| 1116 | ARMATURE_INDUCTANCE | | | | CR: DM1 | |
|---|---|---|---|---|---|---|
| D05<br>mH | Armature inductance | | | SLM FDD | 2/4 | |
| HW:P2 | 0.000000 | 0.000000 | 300.000000 | FLOAT | Power On | |

| 1116 | ARMATURE_INDUCTANCE | | | | | CR: / DM1/ | |
|---|---|---|---|---|---|---|---|
| | Armature inductance | | | FDD | | 2/4 | 810D |
| mH | 0.0000 | 0.0000 | 100.0000 | FLOAT | | PowerOn | |

| 1116 | ARMATURE_INDUCTANCE | | | | | CR: / DM1 / | |
|---|---|---|---|---|---|---|---|
| D05 | Armature inductance | | | FDD | ROT/LIN | 2/4 | 840D |
| mH | 0.0000 | 0.0000 | 300.0000 | FLOAT | | PowerOn | |

| 1117 | ROT: MOTOR_INERTIA<br>LIN: MOTOR_MASS | | | | CR: DM1, DL1 | |
|---|---|---|---|---|---|---|
| D05<br>ROT: kgm²<br>LIN: kg | ROT: Motor moment of inertia<br>LIN: Motor mass | | | MSD SLM FDD | 2/4 | |
| HW:P2 | 0.000000 | 0.000000 | ROT:<br>32.000000<br>LIN:<br>500.000000 | FLOAT | Immediately | |

| 1117 | MOTOR_INERTIA | | | | | CR: / DM1/ | |
|---|---|---|---|---|---|---|---|
| | Motor moment of inertia | | | FDD/MSD | | 2/4 | 810D |
| kgm² | 0.0000<br>HSA: 0.0010 | 0.0000 | 32.0000 | FLOAT | | PowerOn | |

| 1117 | MOTOR_INERTIA | | | | | CR: /DM1 / | |
|---|---|---|---|---|---|---|---|
| D05 | Motor moment of inertia | | | FDD/MSD | ROT | 2/4 | 840D |
| kgm² | 0.0000<br>HSA: 0.0010 | 0.0000 | 32.0000 | FLOAT | | immediately | |

| 1117 | MOTOR_MASS | | | | | CR: / DL1/ | |
|---|---|---|---|---|---|---|---|
| D05 | Motor mass | | | FDD | LIN | 2/4 | 840D |
| kg | 0.0000 | 0.0000 | 500.0000 | FLOAT | | immediately | |

| 1118 | MOTOR_STANDSTILL_CURRENT | | | | CR: DM1 | |
|---|---|---|---|---|---|---|
| D05<br>A | Motor standstill current | | | SLM FDD | 2/4 | |
| HW:P2 | 0.000000 | 0.000000 | 500.000000 | FLOAT | Power On | |

© Siemens AG 2004 All Rights Reserved

| 1118 | MOTOR_STANDSTILL_CURRENT | | | | | CR: / DM1 / | |
|---|---|---|---|---|---|---|---|
| D05 | Motor standstill current | | | FDD | ROT/LIN | 2/4 | |
| A | 0.0000 | 0.0000 | 500.0000 | FLOAT | | PowerOn | |

| 1119 | SERIES_INDUCTANCE | | | | CR: DM1 | |
|---|---|---|---|---|---|---|
| D05<br>mH | Inductance of the series reactor | | | MSD | 2/4 | |
| HW:P2 | 0.000000 | 0.000000 | 65.000000 | FLOAT | Power On | |

| 1119 | SERIES_INDUCTANCE | | | | | CR: /DM1 / | |
|---|---|---|---|---|---|---|---|
| D05 | Inductance of the series reactor | | | MSD | ROT | 2/4 | |
| mH | 0.0000 | 0.0000 | 65.0000 | FLOAT | | PowerOn | |

| 1120 | CURRCTRL_GAIN | | | | CR: DS1 | |
|---|---|---|---|---|---|---|
| D01, EXP<br>V/A | Current controller proportional gain | | | MSD SLM FDD | 2/4 | |
| HW:P2 | 10.000000 | 0.000000 | 10000.000000 | FLOAT | Immediately | |

| 1120 | CURRCTRL_GAIN | | | | | CR: / DS1 / | |
|---|---|---|---|---|---|---|---|
| D01, EXP | Current controller proportional gain | | | FDD/MSD | ROT/LIN | 2/4 | |
| V/A | 10.0000 | 0.0000 | 10000.0000 | FLOAT | | immediately | |

| 1121 | CURRCTRL_INTEGRATOR_TIME | | | | CR: DS1 | |
|---|---|---|---|---|---|---|
| D01, EXP<br>µs | Current controller integral action time | | | MSD SLM FDD | 2/4 | |
| HW:P2 | 2000.000000 | 0.000000 | 8000.000000 | FLOAT | Immediately | |

| 1121 | CURRCTRL_INTEGRATOR_TIME | | | | | CR: / DS1 / | |
|---|---|---|---|---|---|---|---|
| D01, EXP | Current controller integral action time | | | FDD/MSD | ROT/LIN | 2/4 | |
| us | 2000.0000 | 0.0000 | 8000.0000 | FLOAT | | immediately | |

| 1122 | MOTOR_LIMIT_CURRENT | | | | CR: DS1 | |
|---|---|---|---|---|---|---|
| D05<br>A | Motor limit current | | | SLM FDD | 2/4 | |
| HW:P2 | 0.0 | 0.0 | 500.0 | FLOAT | Power On | |

| 1122 | MOTOR_LIMIT_CURRENT | | | | | CR: / DS1 / | |
|---|---|---|---|---|---|---|---|
| D05 | Motor limit current (not 810D) | | | FDD | ROT/LIN | 2/4 | 840D |
| A | 0.0000 | 0.0000 | 500.0000 | FLOAT | | PowerOn | |

| 1124 | CURRCTRL_REF_MODEL_DELAY | | | | CR: DS1 | |
|---|---|---|---|---|---|---|
| D01, EXP<br>- | Balancing the reference model current | | | MSD SLM FDD | 2/4 | |
| HW:P2 | 0.500000 | 0.000000 | 1.000000 | FLOAT | Immediately | |

| 1124 | CURRCTRL_REF_MODEL_DELAY | | | | | CR: / DS1/ | |
|---|---|---|---|---|---|---|---|
| | Balancing the reference model current | | | FDD/MSD | | 2/4 | 810D |
| - | 0.0000 | 0.0000 | 1.0000 | FLOAT | | immediately | |

| 1124 | CURRCTRL_REF_MODEL_DELAY | | | | | CR: / DS1 / | |
|---|---|---|---|---|---|---|---|
| D01, EXP | Balancing the reference model current | | | FDD/MSD | ROT/LIN | 2/4 | 840D |
| - | 0.5000 | 0.0000 | 1.0000 | FLOAT | | immediately | |

| 1125 | UF_MODE_RAMP_TIME_1 | | | | CR: DE1 | |
|---|---|---|---|---|---|---|
| D04<br>s | Ramp-up time 1 in V/f operation | | | MSD SLM FDD | 2/4 | |
| HW:P2 | 5.000000 | 0.010000 | 100.000000 | FLOAT | Immediately | |

| 1125 | UF_MODE_RAMP_TIME_1 | | | | | CR: / DE1 / | |
|---|---|---|---|---|---|---|---|
| D04, EXP | Ramp-up time 1 in V/f operation (not 810D) | | | FDD/MSD | ROT/LIN | 2/4 | 840D |
| s | 5.0000 | 0.0100 | 100.0000 | FLOAT | | immediately | |

© Siemens AG 2004 All Rights Reserved

| 1126 | UF_MODE_RAMP_TIME_2 | | | | | CR: DE1 | |
|---|---|---|---|---|---|---|---|
| D04<br>s | Ramp-up time 2 in V/f operation | | | MSD SLM FDD | | 2/4 | |
| HW:P2 | 5.000000 | 0.010000 | 100.000000 | FLOAT | | Immediately | |

| 1126 | UF_MODE_RAMP_TIME_2 | | | | | CR: / DE1 / | |
|---|---|---|---|---|---|---|---|
| D04, EXP | Ramp-up time 2 in V/f operation (not 810D) | | | FDD/MSD | ROT/LIN | 2/4 | 840D |
| s | 5.0000 | 0.0100 | 100.0000 | FLOAT | | immediately | |

| 1127 | UF_VOLTAGE_AT_F0 | | | | | CR: DE1 | |
|---|---|---|---|---|---|---|---|
| D04<br>V | Voltage at f=0 in V/f operation | | | MSD | | 2/4 | |
| HW:P2 | 2.000000 | 0.000000 | 20.000000 | FLOAT | | Immediately | |

| 1127 | UF_VOLTAGE_AT_F0 | | | | | CR: /DE1 / | |
|---|---|---|---|---|---|---|---|
| D04, D05, EXP | Voltage at f=0 in V/f operation (not 810D) | | | MSD | ROT | 2/4 | 840D |
| V | 2.0000 | 0.0000 | 20.0000 | FLOAT | | immediately | |

| 1128 | OPT_LOAD_ANGEL | | | | | CR: FBU, POS3 | |
|---|---|---|---|---|---|---|---|
| EXP, D05<br>Degrees | Optimum load angle | | | SLM FDD | | 2/4 | |
| HW:P2 | 90.000000 | 90.000000 | 135.000000 | FLOAT | | Immediately | |

| 1128 | OPT_LOAD_ANGEL | | | | | CR: / FBU, POS3 / | |
|---|---|---|---|---|---|---|---|
| EXP, D05 | Optimum load angle (not 810D) | | | FDD | ROT/LIN | 2/4 | 840D |
| degrees | 90.0000 | 90.0000 | 135.0000 | FLOAT | | immediately | |

| 1129 | POWER_FACTOR_COS_PHI | | | | | CR: DM1 | |
|---|---|---|---|---|---|---|---|
| D05<br>- | Cos phi power factor | | | MSD | | 2/4 | |
| HW:P2 | 0.800000 | 0.000000 | 1.000000 | FLOAT | | Power On | |

| 1129 | POWER_FACTOR_COS_PHI | | | | | CR: /DM1 / | |
|---|---|---|---|---|---|---|---|
| D05 | Cos phi power factor (not 810D) | | | MSD | ROT | 2/4 | 840D |
| - | 0.8000 | 0.0000 | 1.0000 | FLOAT | | PowerOn | |

| 1130 | MOTOR_NOMINAL_POWER | | | | | CR: DM1 | |
|---|---|---|---|---|---|---|---|
| D05<br>kW | Rated motor output | | | MSD | | 2/4 | |
| HW:P2 | 0.000000 | 0.000000 | 1500.000000 | FLOAT | | Power On | |

| 1130 | MOTOR_NOMINAL_POWER | | | | | CR: /DM1 / | |
|---|---|---|---|---|---|---|---|
| D05 | Rated motor output | | | MSD | ROT | 2/4 | |
| kW | 0.0000 | 0.0000 | 1500.0000 | FLOAT | | PowerOn | |

| 1132 | MOTOR_NOMINAL_VOLTAGE | | | | | CR: DM1 | |
|---|---|---|---|---|---|---|---|
| D05<br>V | Rated motor voltage | | | MSD | | 2/4 | |
| HW:P2 | 380.000000 | 0.000000 | 5000.000000 | FLOAT | | Power On | |

| 1132 | MOTOR_NOMINAL_VOLTAGE | | | | | CR: / DM1/ | |
|---|---|---|---|---|---|---|---|
| | Rated motor voltage | | | MSD | | 2/4 | 810D |
| V | 0.0000 | 0.0000 | 5000.0000 | FLOAT | | PowerOn | |

| 1132 | MOTOR_NOMINAL_VOLTAGE | | | | | CR: /DM1 / | |
|---|---|---|---|---|---|---|---|
| D05 | Rated motor voltage | | | MSD | ROT | 2/4 | 840D |
| V | 380.0000 | 0.0000 | 5000.0000 | FLOAT | | PowerOn | |

| 1134 | MOTOR_NOMINAL_FREQUENCY | | | | | CR: DM1 | |
|---|---|---|---|---|---|---|---|
| D05<br>Hz | Rated motor frequency | | | MSD | | 2/4 | |
| HW:P2 | 50.000000 | 0.000000 | 3000.000000 | FLOAT | | Power On | |

© Siemens AG 2004 All Rights Reserved

| 1134 | MOTOR_NOMINAL_FREQUENCY | | | | | CR: / DM1/ | |
|---|---|---|---|---|---|---|---|
| | Rated motor frequency | | | MSD | | 2/4 | 810D |
| Hz | 0.0000 | 0.0000 | 3000.0000 | FLOAT | | PowerOn | |

| 1134 | MOTOR_NOMINAL_FREQUENCY | | | | | CR: /DM1 / | |
|---|---|---|---|---|---|---|---|
| D05 | Rated motor frequency | | | MSD | ROT | 2/4 | 840D |
| Hz | 50.0000 | 0.0000 | 3000.0000 | FLOAT | | PowerOn | |

| 1135 | MOTOR_NOLOAD_VOLTAGE | | | | CR: DM1 | |
|---|---|---|---|---|---|---|
| D05<br>V | Motor no-load voltage | | | MSD | 2/4 | |
| HW:P2 | 0.000000 | 0.000000 | 500.000000 | FLOAT | Immediately | |

| 1135 | MOTOR_NOLOAD_VOLTAGE | | | | | CR: /DM1 / | |
|---|---|---|---|---|---|---|---|
| D05 | Motor no-load voltage | | | MSD | ROT | 2/4 | |
| V | 0.0000 | 0.0000 | 500.0000 | FLOAT | | immediately | |

| 1136 | MOTOR_NOLOAD_CURRENT | | | | CR: DM1 | |
|---|---|---|---|---|---|---|
| D05<br>A | Motor no-load current | | | MSD SLM FDD | 2/4 | |
| HW:P2 | 0.000000 | 0.000000 | 500.000000 | FLOAT | Immediately | |

| 1136 | MOTOR_NOLOAD_CURRENT | | | | | CR: / DM1 / | |
|---|---|---|---|---|---|---|---|
| D05 | Motor no-load current | | | FDD/MSD | ROT/LIN | 2/4 | |
| A | 0.0000 | 0.0000 | 500.0000 | FLOAT | | immediately | |

| 1137 | STATOR_COLD_RESISTANCE | | | | CR: DM1 | |
|---|---|---|---|---|---|---|
| D05<br>Ohm | Cold stator resistance | | | MSD | 2/4 | |
| HW:P2 | 0.000000 | 0.000000 | 120.000000 | FLOAT | Immediately | |

| 1137 | STATOR_COLD_RESISTANCE | | | | | CR: /DM1 / | |
|---|---|---|---|---|---|---|---|
| D05 | Cold stator resistance | | | MSD | ROT | 2/4 | |
| ohm | 0.0000 | 0.0000 | 120.0000 | FLOAT | | immediately | |

| 1138 | ROTOR_COLD_RESISTANCE | | | | CR: DM1 | |
|---|---|---|---|---|---|---|
| D05<br>Ohm | Cold rotor resistance | | | MSD | 2/4 | |
| HW:P2 | 0.000000 | 0.000000 | 120.000000 | FLOAT | Immediately | |

| 1138 | ROTOR_COLD_RESISTANCE | | | | | CR: /DM1 / | |
|---|---|---|---|---|---|---|---|
| D05 | Cold rotor resistance | | | MSD | ROT | 2/4 | |
| ohm | 0.0000 | 0.0000 | 120.0000 | FLOAT | | immediately | |

| 1139 | STATOR_LEAKAGE_REACTANCE | | | | CR: DM1 | |
|---|---|---|---|---|---|---|
| D05<br>Ohm | Stator leakage reactance | | | MSD | 2/4 | |
| HW:P2 | 0.000000 | 0.000000 | 100.000000 | FLOAT | Immediately | |

| 1139 | STATOR_LEAKAGE_REACTANCE | | | | | CR: /DM1 / | |
|---|---|---|---|---|---|---|---|
| D05 | Stator leakage reactance | | | MSD | ROT | 2/4 | |
| ohm | 0.0000 | 0.0000 | 100.0000 | FLOAT | | immediately | |

| 1140 | ROTOR_LEAKAGE_REACTANCE | | | | CR: DM1 | |
|---|---|---|---|---|---|---|
| D05<br>Ohm | Rotor leakage reactance | | | MSD | 2/4 | |
| HW:P2 | 0.000000 | 0.000000 | 100.000000 | FLOAT | Immediately | |

| 1140 | ROTOR_LEAKAGE_REACTANCE | | | | | CR: /DM1 / | |
|---|---|---|---|---|---|---|---|
| D05 | Rotor leakage reactance | | | MSD | ROT | 2/4 | |
| ohm | 0.0000 | 0.0000 | 100.0000 | FLOAT | | immediately | |

© Siemens AG 2004 All Rights Reserved

| 1141 | MAGNETIZING_REACTANCE | | | | | CR: DM1 | |
|---|---|---|---|---|---|---|---|
| D05<br>Ohm | Magnetizing reactance | | | MSD | | 2/4 | |
| HW:P2 | 0.000000 | 0.000000 | 1000.000000 | FLOAT | | Immediately | |

| 1141 | MAGNETIZING_REACTANCE | | | | | CR: /DM1 / | |
|---|---|---|---|---|---|---|---|
| D05 | Magnetizing reactance | | | MSD | ROT | 2/4 | |
| ohm | 0.0000 | 0.0000 | 1000.0000 | FLOAT | | immediately | |

| 1142 | FIELD_WEAKENING_SPEED | | | | CR: DM1, DD2 | |
|---|---|---|---|---|---|---|
| D05<br>1/min | Threshold speed for field weakening | | | MSD SLM FDD | 2/4 | |
| HW:P2 | 0.000000 | 0.000000 | 100000.000000 | FLOAT | Immediately | |

| 1142 | FIELD_WEAKENING_SPEED | | | | | CR: / DM1, DD2/ | |
|---|---|---|---|---|---|---|---|
| | Threshold speed for field weakening | | | MSD | | 2/4 | 810D |
| 1/min | 0.0000 | 0.0000 | 50000.0000 | FLOAT | | PowerOn | |

| 1142 | FIELD_WEAKENING_SPEED | | | | | CR: / DM1, DD2 / | |
|---|---|---|---|---|---|---|---|
| D05 | Threshold speed for field weakening | | | FDD/MSD | ROT/LIN | 2/4 | 840D |
| 1/min | 0.0000 | 0.0000 | 100000.0000 | FLOAT | | immediately | |

| 1143 | LH_CURVE_UPPER_SPEED | | | | CR: DM1, DD2 | |
|---|---|---|---|---|---|---|
| -<br>1/min | Upper speed for the L_h characteristic | | | MSD | 2/4 | |
| HW:P2 | 0.000000 | 0.000000 | 100000.000000 | FLOAT | Power On | |

| 1143 | LH_CURVE_UPPER_SPEED | | | | | CR: / DM1, DD2/ | |
|---|---|---|---|---|---|---|---|
| | Upper speed for the L_h characteristic | | | MSD | | 2/4 | 810D |
| 1/min | 0.0000 | 0.0000 | 50000.0000 | FLOAT | | PowerOn | |

| 1143 | LH_CURVE_UPPER_SPEED | | | | | CR: /DM1, DD2 / | |
|---|---|---|---|---|---|---|---|
| - | Upper speed for the L_h characteristic | | | MSD | ROT | 2/4 | 840D |
| 1/min | 0.0000 | 0.0000 | 100000.0000 | FLOAT | | PowerOn | |

| 1144 | LH_CURVE_GAIN | | | | CR: DM1, DD2 | |
|---|---|---|---|---|---|---|
| -<br>% | Gain factor of the L_h characteristic | | | MSD | 2/4 | |
| HW:P2 | 100.000000 | 100.000000 | 500.000000 | FLOAT | Power On | |

| 1144 | LH_CURVE_GAIN | | | | | CR: /DM1, DD2 / | |
|---|---|---|---|---|---|---|---|
| - | Gain factor of the L_h characteristic | | | MSD | ROT | 2/4 | |
| % | 100.0000 | 100.0000 | 500.0000 | FLOAT | | PowerOn | |

| 1145 | STALL_TORQUE_REDUCTION | | | | CR: DM1, DÜ1 | |
|---|---|---|---|---|---|---|
| D05<br>% | Stall torque reduction factor | | | MSD SLM FDD | 2/4 | |
| HW:P2 | 100.000000 | 5.000000 | 1000.000000 | FLOAT | Immediately | |

| 1145 | STALL_TORQUE_REDUCTION | | | | | CR: / DM1, DÜ1 / | |
|---|---|---|---|---|---|---|---|
| D05 | Stall torque reduction factor | | | FDD/MSD | ROT/LIN | 2/4 | |
| % | 100.0000 | 5.0000 | 1000.0000 | FLOAT | | immediately | |

| 1146 | MOTOR_MAX_ALLOWED_SPEED | | | | CR: DM1, DÜ1, DL1 | |
|---|---|---|---|---|---|---|
| D05<br>ROT: 1/min<br>LIN: m/min | Maximum motor speed | | | MSD SLM FDD | 2/4 | |
| HW:P2 | 0.000000 | 0.000000 | 100000.000000 | FLOAT | Power On | |

© Siemens AG 2004 All Rights Reserved

| 1146 | MOTOR_MAX_ALLOWED_SPEED | | | | | CR: / DM1, DÜ1/ | |
|---|---|---|---|---|---|---|---|
| | Maximum motor speed | | | FDD/MSD | | 2/4 | 810D |
| 1/min | 0.0000 | 0.0000 | 50000.0000 | FLOAT | | PowerOn | |

| 1146 | MOTOR_MAX_ALLOWED_SPEED | | | | | CR: /DM1, DÜ1 / | |
|---|---|---|---|---|---|---|---|
| D05 | Maximum motor speed | | | FDD/MSD | ROT | 2/4 | 840D |
| 1/min | 0.0000<br>HSA: 1500.0000 | 0.0000 | 100000.0000 | FLOAT | | PowerOn | |

| 1146 | MOTOR_MAX_ALLOWED_SPEED | | | | | CR: / DL1/ | |
|---|---|---|---|---|---|---|---|
| D05 | Maximum motor speed | | | FDD | LIN | 2/4 | 840D |
| m/min | 0.0000 | 0.0000 | 100000.0000 | FLOAT | | PowerOn | |

| 1147 | SPEED_LIMIT | | | | CR: DÜ1, DL1 | |
|---|---|---|---|---|---|---|
| D02, D05<br>ROT: 1/min<br>LIN: m/min | Motor speed limit | | | MSD SLM FDD | 2/4 | |
| HW:P2 | ROT: 7000.000000<br>LIN: 120.000000 | 0.000000 | 100000.000000 | FLOAT | Immediately | |

| 1147 | SPEED_LIMIT | | | | | CR: / DÜ1/ | |
|---|---|---|---|---|---|---|---|
| | Motor speed limit | | | FDD/MSD | | 2/4 | 810D |
| 1/min | 7000.0000<br>HSA: 8000.0000 | 0.0000 | 50000.0000 | FLOAT | | immediately | |

| 1147 | SPEED_LIMIT | | | | | CR: /DÜ1 / | |
|---|---|---|---|---|---|---|---|
| D02, D05 | Motor speed limit | | | FDD/MSD | ROT | 2/4 | 840D |
| 1/min | 7000.0000<br>HSA: 8000.0000 | 0.0000 | 100000.0000 | FLOAT | | immediately | |

| 1147 | SPEED_LIMIT | | | | | CR: / DL1/ | |
|---|---|---|---|---|---|---|---|
| D02, D05 | Maximum permissible motor speed | | | FDD | LIN | 2/4 | 840D |
| m/min | 120.0000 | 0.0000 | 100000.0000 | FLOAT | | immediately | |

| 1148 | ACTUAL_STALL_POWER_SPEED | | | | CR: DD1 | |
|---|---|---|---|---|---|---|
| D04<br>1/min | Threshold speed of pull-out power | | | MSD | 2/4 | |
| HW:P2 | 0.000000 | -100000.000000 | 100000.000000 | FLOAT | Immediately | |

| 1148 | ACTUAL_STALL_POWER_SPEED | | | | | CR: /DD1 / | |
|---|---|---|---|---|---|---|---|
| D04 | Threshold speed of pull-out power (not 810D) | | | MSD | ROT | 2/4 | 840D |
| 1/min | 0.0000 | -100000.0000 | 100000.0000 | FLOAT | | immediately | |

| 1149 | RELUCT_TORQUE_RATIO | | | | CR: FBU | |
|---|---|---|---|---|---|---|
| EXP, D05<br>mH | Reluctance torque constant | | | FDD SLM | 2/4 | |
| HW:P2 | 0.000000 | 0.000000 | 300.000000 | FLOAT | Immediately | |

| 1149 | RELUCT_TORQUE_RATIO | | | | | CR: / FBU / | |
|---|---|---|---|---|---|---|---|
| D05 | Reluctance torque constant (not 810D) | | | FDD | ROT/LIN | 2/4 | 840D |
| mH | 0.0000 | 0.0000 | 300.0000 | FLOAT | | immediately | |

| 1150 | FIELDCTRL_GAIN | | | | CR: DS1 | |
|---|---|---|---|---|---|---|
| D01, EXP<br>A/(Vs) | Flux controller P-gain | | | MSD SLM FDD | 2/4 | |
| HW:P2 | 400.000000 | 0.000000 | 100000.000000 | FLOAT | Immediately | |

| 1150 | FIELDCTRL_GAIN | | | | | CR: /DS1 / | |
|---|---|---|---|---|---|---|---|
| D01, EXP | Flux controller P-gain | | | MSD | ROT | 2/4 | |
| A/(Vs) | 400.0000 | 0.0000 | 100000.0000 | FLOAT | | immediately | |

© Siemens AG 2004 All Rights Reserved

| 1151 | FIELDCTRL_INTEGRATOR_TIME | | | | CR: DS1 | |
|---|---|---|---|---|---|---|
| D01, EXP<br>ms | Flux controller integral-action time | | | MSD SLM FDD | 2/4 | |
| HW:P2 | 10.000000 | 0.000000 | 500.000000 | FLOAT | Immediately | |

| 1151 | FIELDCTRL_INTEGRATOR_TIME | | | | | CR: /DS1 / | |
|---|---|---|---|---|---|---|---|
| D01, EXP | Flux controller integral-action time | | | MSD | ROT | 2/4 | |
| ms | 10.0000 | 0.0000 | 500.0000 | FLOAT | | immediately | |

| 1159 | FLUX_MODEL_CORRECTION | | | | CR: | |
|---|---|---|---|---|---|---|
| D01, EXP, D04<br>- | Flow model correction | | | MSD SLM FDD | 2/4 | |
| HW:P2 | 1 | 0 | 1 | UNS.WORD | Immediately | |

| 1160 | FLUX_ACQUISITION_SPEED | | | | CR: DS1 | |
|---|---|---|---|---|---|---|
| D01, EXP<br>ROT: 1/min<br>LIN: m/min | Threshold speed for flux sensing | | | MSD SLM FDD | 2/4 | |
| HW:P2 | ROT: 1500.000000<br>LIN: 20.000000 | ROT: 200.000000<br>LIN: 3.000000 | 100000.000000 | FLOAT | Immediately | |

| 1160 | FLUX_AQUISITION_SPEED | | | | | CR: / DS1/ | |
|---|---|---|---|---|---|---|---|
| | Threshold speed for flux sensing | | | MSD | | 2/4 | 810D |
| 1/min | 1500.0000 | 200.0000 | 50000.0000 | FLOAT | | immediately | |

| 1160 | FLUX_ACQUISITION_SPEED | | | | | CR: /DS1 / | |
|---|---|---|---|---|---|---|---|
| D01, EXP | Threshold speed for flux sensing | | | MSD | ROT | 2/4 | 840D |
| 1/min | 1500.0000 | 200.0000 | 100000.0000 | FLOAT | | immediately | |

| 1161 | FIXED_LINK_VOLTAGE | | | | CR: DS1 | |
|---|---|---|---|---|---|---|
| D02<br>V | Fixed DC link voltage | | | MSD SLM FDD | 2/4 | |
| HW:P2 | 0 | 0 | 700 | UNS.WORD | Immediately | |

| 1161 | FIXED_LINK_VOLTAGE | | | | | CR: / DS1 / | |
|---|---|---|---|---|---|---|---|
| D02 | Fixed DC link voltage | | | FDD/MSD | ROT/LIN | 2/4 | |
| V | 0 | 0 | 700 | UNS. WORD | | immediately | |

| 1170 | POLE_PAIR_PITCH | | | | CR: , DL1 | |
|---|---|---|---|---|---|---|
| D05<br>mm | Pole pair pitch | | | SLM FDD | 2/4 | |
| HW:P2 | 72.000000 | 0.000000 | 1000.000000 | FLOAT | Power On | |

| 1170 | POLE_PAIR_PITCH | | | | | CR: / DL1/ | |
|---|---|---|---|---|---|---|---|
| D05 | Pole pair pitch (not 810D) | | | FDD | LIN | 2/4 | 840D |
| mm | 72.0000 | 0.0000 | 1000.0000 | FLOAT | | PowerOn | |

| 1175 | INVERTER_THERM_CURR_ASYN | | | | CR: DE1, DM1 | |
|---|---|---|---|---|---|---|
| D05<br>A | Power section ASYN limit current | | | SLM FDD | 2/4 | |
| HW:P2 | 200.000000 | 0.000000 | 500.000000 | FLOAT | Power On | |

| 1175 | INVERTER_THERM_CURR_ASYN | | | | | CR: / DE1, DM1 / | |
|---|---|---|---|---|---|---|---|
| D05 | Power section ASYN limit current (not 810D) | | | FDD | ROT/LIN | 2/4 | 840D |
| A | 0.0000 | 0.0000 | 500.0000 | FLOAT | | PowerOn | |

| 1176 | INVERTER_MAX_S6_CURR_ASYN | | | | CR: DE1, DM1 | |
|---|---|---|---|---|---|---|
| D05<br>A | Power section S6 ASYN limit current | | | SLM FDD | 2/4 | |
| HW:P2 | 200.000000 | 0.000000 | 500.000000 | FLOAT | Power On | |

© Siemens AG 2004 All Rights Reserved

| 1176 | INVERTER_MAX_S6_CURR_ASYN | | | | | CR: / DE1, DM1 / | |
|---|---|---|---|---|---|---|---|
| D05 | Power section S6 ASYN limit current (not 810D) | | | FDD | ROT/LIN | 2/4 | 840D |
| A | 0.0000 | 0.0000 | 500.0000 | FLOAT | | PowerOn | |

| 1177 | INVERTER_RATED_CURR_ASYN | | | | CR: DE1, DM1 | |
|---|---|---|---|---|---|---|
| D05<br>A | Power section ASYN rated current | | | SLM FDD | 2/4 | |
| HW:P2 | 200.000000 | 0.000000 | 500.000000 | FLOAT | Power On | |

| 1177 | INVERTER_RATED_CURR_ASYN | | | | | CR: / DE1, DM1 / | |
|---|---|---|---|---|---|---|---|
| D05 | Power section ASYN rated current (not 810D) | | | FDD | ROT/LIN | 2/4 | 840D |
| A | 0.0000 | 0.0000 | 500.0000 | FLOAT | | PowerOn | |

| 1178 | INVERTER_DERATING_SYN | | | | CR: DE1, DM1 | |
|---|---|---|---|---|---|---|
| -<br>% | Power section derating SYN | | | SLM FDD | 2/4 | |
| HW:P2 | 0.0 | 0.0 | 100.0 | FLOAT | Power On | |

| 1178 | INVERTER_DERATING_SYN | | | | | CR: / DE1, DM1 / | |
|---|---|---|---|---|---|---|---|
| D05 | Power section derating SYN (not 810D) | | | FDD | ROT/LIN | 2/4 | 840D |
| % | 0.0000 | 0.0000 | 100.0000 | FLOAT | | PowerOn | |

| 1179 | INVERTER_DERATING_ASYN | | | | CR: DE1, DM1 | |
|---|---|---|---|---|---|---|
| -<br>% | Power section derating ASYN | | | FDD MSD SLM | 2/4 | |
| HW:P2 | 0.0 | 0.0 | 100.0 | FLOAT | Power On | |

| 1179 | INVERTER_DERATING_ASYN | | | | | CR: / DE1, DM1 / | |
|---|---|---|---|---|---|---|---|
| D05 | Power section derating ASYN (not 810D) | | | FDD/MSD | ROT/LIN | 2/4 | 840D |
| % | 0.0000 | 0.0000 | 100.0000 | FLOAT | | PowerOn | |

| 1180 | CURRCTRL_ADAPT_CURRENT_1 | | | | CR: FBU, DS1 | |
|---|---|---|---|---|---|---|
| -<br>% | Lower current limit adaptation | | | SLM FDD | 2/4 | |
| HW:P2 | 0.000000 | 0.000000 | 100.000000 | FLOAT | Immediately | |

| 1180 | CURRCTRL_ADAPT_CURRENT_1 | | | | | CR: / FBU, DS1 / | |
|---|---|---|---|---|---|---|---|
| | Lower current limit adaptation (not 810D) | | | FDD | ROT/LIN | 2/4 | 840D |
| % | 0.0000 | 0.0000 | 100.0000 | FLOAT | | immediately | |

| 1181 | CURRCTRL_ADAPT_CURRENT_2 | | | | CR: FBU, DS1 | |
|---|---|---|---|---|---|---|
| -<br>% | Upper current limit adaptation | | | SLM FDD | 2/4 | |
| HW:P2 | 100.000000 | 0.000000 | 100.000000 | FLOAT | Immediately | |

| 1181 | CURRCTRL_ADAPT_CURRENT_2 | | | | | CR: / FBU, DS1 / | |
|---|---|---|---|---|---|---|---|
| | Upper current limit adaptation (not 810D) | | | FDD | ROT/LIN | 2/4 | 840D |
| % | 100.0000 | 0.0000 | 100.0000 | FLOAT | | immediately | |

| 1182 | REDUCE_ARMATURE_INDUCTANCE | | | | CR: FBU, DS1 | |
|---|---|---|---|---|---|---|
| -<br>% | Current controller adaptation factor | | | SLM FDD | 2/4 | |
| HW:P2 | 100.000000 | 1.000000 | 100.000000 | FLOAT | Immediately | |

| 1182 | REDUCE_ARMATURE_INDUCTANCE | | | | | CR: / FBU, DS1 / | |
|---|---|---|---|---|---|---|---|
| | Current controller adaptation factor (not 810D) | | | FDD | ROT/LIN | 2/4 | 840D |
| % | 100.0000 | 1.0000 | 100.0000 | FLOAT | | immediately | |

| 1183 | CURRCTRL_ADAPT_ENABLE | | | | CR: DS1 | |
|---|---|---|---|---|---|---|
| -<br>- | Current controller adaptation ON | | | SLM FDD | 2/4 | |
| HW:P2 | 1 | 0 | 1 | UNS.WORD | Power On | |

© Siemens AG 2004 All Rights Reserved

| 1183 | CURRCTRL_ADAPT_ENABLE | | | | | CR: / DS1 / | |
|---|---|---|---|---|---|---|---|
| - | Current controller adaptation ON (not 810D) | | | FDD | ROT/LIN | 2/4 | 840D |
| - | 0 | 0 | 1 | UNS. WORD | | PowerOn | |

| 1185 | STARTUP_FACT_CURRCTRL | | | | CR: | |
|---|---|---|---|---|---|---|
| -<br>% | Startup factor P-IREG | | | MSD | 2/4 | |
| HW:P2 | 100.0 | 0.0 | 10000.0 | FLOAT | Immediately | |

| 1185 | STARTUP_FACT_CURRCTRL | | | | | CR: / / | |
|---|---|---|---|---|---|---|---|
| - | Startup factor P-IREG (not 810D) | | | MSD | ROT | 2/4 | 840D |
| % | 100.0000 | 0.0000 | 10000.0000 | FLOAT | | immediately | |

| 1190 | TORQUE_LIMIT_FROM_NC | | | | CR: DÜ1 | |
|---|---|---|---|---|---|---|
| D02, EXP<br>Nm | Evaluation of torque limit | | | MSD SLM FDD | 2/4 | |
| HW:P2 | 100.000000 | 0.000000 | 10000.000000 | FLOAT | Immediately | |

| 1190 | TORQUE_LIMIT_FROM_NC | | | | | CR: / DÜ1 / | |
|---|---|---|---|---|---|---|---|
| D02, EXP | Evaluation of torque limit (not 810D) | | | FDD/MSD | ROT/LIN | 2/4 | 840D |
| Nm | 100.0000 | 0.0000 | 10000.0000 | FLOAT | | immediately | |

| 1191 | TORQUE_LIMIT_ADAPT_SERVO | | | | CR: DÜ1 | |
|---|---|---|---|---|---|---|
| D02, EXP<br>- | Adapting servo torque limit | | | MSD SLM FDD | 2/4 | |
| HW:P2 | 1.000000 | 0.000000 | 100.000000 | FLOAT | Immediately | |

| 1191 | TORQUE_LIMIT_ADAPT_SERVO | | | | | CR: / DÜ1 / | |
|---|---|---|---|---|---|---|---|
| D02, EXP | Adapting servo torque limit (not 810D) | | | FDD/MSD | ROT/LIN | 2/4 | 840D |
| - | 1.0000 | 0.0000 | 100.0000 | FLOAT | | immediately | |

| 1192 | ROT: TORQUE_LIMIT_WEIGHT<br>LIN: FORCE_LIMIT_WEIGHT | | | | CR: F1, DL1 | |
|---|---|---|---|---|---|---|
| D02, EXP<br>% | ROT: Weight torque<br>LIN: Weight force | | | MSD SLM FDD | 2/4 | |
| HW:P2 | 0.000000 | -100.000000 | 100.000000 | FLOAT | Immediately | |

| 1192 | FORCE_LIMIT_WEIGHT | | | | | CR: / DL1, F1/ | |
|---|---|---|---|---|---|---|---|
| D02, EXP | Weight force (not 810D) | | | FDD | LIN | 2/4 | 840D |
| % | 0.0000 | -100.0000 | 100.0000 | FLOAT | | immediately | |

| 1192 | TORQUE_LIMIT_WEIGHT | | | | | CR: /F1 / | |
|---|---|---|---|---|---|---|---|
| D02, EXP | Weight torque (not 810D) | | | FDD/MSD | ROT | 2/4 | 840D |
| % | 0.0000 | -100.0000 | 100.0000 | FLOAT | | immediately | |

| 1200 | NUM_CURRENT_FILTERS | | | | CR: DD2 | |
|---|---|---|---|---|---|---|
| D01<br>- | Number of current setpoint filters | | | MSD SLM FDD | 2/4 | |
| HW:P2 | 1 | 0 | 4 | UNS.WORD | Immediately | |

| 1200 | NUM_CURRENT_FILTERS [n] 0 ...7 Index of param.-set | | | | | CR: / DD2/ | |
|---|---|---|---|---|---|---|---|
| | Number of current setpoint filters | | | FDD/MSD | | 2/4 | 810D |
| - | 0 | 0 | 4 | UNS. WORD | | immediately | |

| 1200 | NUM_CURRENT_FILTERS [n] 0 ...7 Index of param.-set | | | | | CR: / DD2 / | |
|---|---|---|---|---|---|---|---|
| D01 | Number of current setpoint filters | | | FDD/MSD | ROT/LIN | 2/4 | 840D |
| - | 1 | 0 | 4 | UNS. WORD | | immediately | |

© Siemens AG 2004 All Rights Reserved

| 1201 | **CURRENT_FILTER_CONFIG** | | | | CR: **DD2** | |
|---|---|---|---|---|---|---|
| D01<br>- | Type of current setpoint filter | | | MSD SLM FDD | 2/4 | |
| HW:P2 | 0x0000 | 0x0000 | 0x800f | UNS.WORD | Immediately | |

| 1201 | **CURRENT_FILTER_CONFIG** [n] 0 ...7 Index of param.-set | | | | | CR: **/ DD2/** | |
|---|---|---|---|---|---|---|---|
| | Type of current setpoint filter | | | FDD/MSD | | 2/4 | **810D** |
| - | 0 | 0 | ffff | UNS. WORD | | immediately | |

| 1201 | **CURRENT_FILTER_CONFIG** [n] 0 ...7 Index of param.-set | | | | | CR: **/ DD2 /** | |
|---|---|---|---|---|---|---|---|
| D01 | Type of current setpoint filter | | | FDD/MSD | ROT/LIN | 2/4 | **840D** |
| - | 0 | 0 | 800f | UNS. WORD | | immediately | |

| 1202 | **CURRENT_FILTER_1_FREQUENCY** | | | | CR: **DD2** | |
|---|---|---|---|---|---|---|
| D01<br>Hz | Natural frequency for current setpoint filter 1 | | | MSD SLM FDD | 2/4 | |
| HW:P2 | 2000.000000 | 0.000000 | 8000.000000 | FLOAT | Immediately | |

| 1202 | **CURRENT_FILTER_1_FREQUENCY** [n] 0 ...7 Index of param.-set | | | | | CR: **/ DD2/** | |
|---|---|---|---|---|---|---|---|
| | Natural frequency for current setpoint filter 1 | | | FDD/MSD | | 2/4 | **810D** |
| Hz | 0.0000 | 0.0000 | 3999.0000 | FLOAT | | immediately | |

| 1202 | **CURRENT_FILTER_1_FREQUENCY** [n] 0 ...7 Index of param.-set | | | | | CR: **/ DD2 /** | |
|---|---|---|---|---|---|---|---|
| D01 | Natural frequency for current setpoint filter 1 | | | FDD/MSD | ROT/LIN | 2/4 | **840D** |
| Hz | 2000.0000 | 0.0000 | 8000.0000 | FLOAT | | immediately | |

| 1203 | **CURRENT_FILTER_1_DAMPING** | | | | CR: **DD2** | |
|---|---|---|---|---|---|---|
| D01<br>- | Damping for current setpoint filter 1 | | | MSD SLM FDD | 2/4 | |
| HW:P2 | 0.700000 | 0.050000 | 5.000000 | FLOAT | Immediately | |

| 1203 | **CURRENT_FILTER_1_DAMPING** [n] 0 ...7 Index of param.-set | | | | | CR: **/ DD2/** | |
|---|---|---|---|---|---|---|---|
| | Damping for current setpoint filter 1 | | | FDD/MSD | | 2/4 | **810D** |
| - | 1.0000 | 0.0500 | 5.0000 | FLOAT | | immediately | |

| 1203 | **CURRENT_FILTER_1_DAMPING** [n] 0 ...7 Index of param.-set | | | | | CR: **/ DD2 /** | |
|---|---|---|---|---|---|---|---|
| D01 | Damping for current setpoint filter 1 | | | FDD/MSD | ROT/LIN | 2/4 | **840D** |
| - | 0.7000 | 0.0500 | 5.0000 | FLOAT | | immediately | |

| 1204 | **CURRENT_FILTER_2_FREQUENCY** | | | | CR: **DD2** | |
|---|---|---|---|---|---|---|
| D01<br>Hz | Natural frequency for current setpoint filter 2 | | | MSD SLM FDD | 2/4 | |
| HW:P2 | 0.000000 | 0.000000 | 8000.000000 | FLOAT | Immediately | |

| 1204 | **CURRENT_FILTER_2_FREQUENCY** [n] 0 ...7 Index of param.-set | | | | | CR: **/ DD2/** | |
|---|---|---|---|---|---|---|---|
| | Natural frequency for current setpoint filter 2 | | | FDD/MSD | | 2/4 | **810D** |
| Hz | 0.0000 | 0.0000 | 1999.0000 | FLOAT | | immediately | |

| 1204 | **CURRENT_FILTER_2_FREQUENCY** [n] 0 ...7 Index of param.-set | | | | | CR: **/ DD2 /** | |
|---|---|---|---|---|---|---|---|
| D01 | Natural frequency for current setpoint filter 2 | | | FDD/MSD | ROT/LIN | 2/4 | **840D** |
| Hz | 0.0000 | 0.0000 | 8000.0000 | FLOAT | | immediately | |

| 1205 | **CURRENT_FILTER_2_DAMPING** | | | | CR: **DD2** | |
|---|---|---|---|---|---|---|
| D01<br>- | Damping for current setpoint filter 2 | | | MSD SLM FDD | 2/4 | |
| HW:P2 | 1.000000 | 0.050000 | 5.000000 | FLOAT | Immediately | |

| 1205 | **CURRENT_FILTER_2_DAMPING** [n] 0 ...7 Index of param.-set | | | | | CR: **/ DD2 /** | |
|---|---|---|---|---|---|---|---|
| D01 | Damping for current setpoint filter 2 | | | FDD/MSD | ROT/LIN | 2/4 | |
| - | 1.0000 | 0.0500 | 5.0000 | FLOAT | | immediately | |

© Siemens AG 2004 All Rights Reserved

| 1206 | **CURRENT_FILTER_3_FREQUENCY** | | | | CR: **DD2** | |
|---|---|---|---|---|---|---|
| D01<br>Hz | Natural frequency for current setpoint filter 3 | | | MSD SLM FDD | 2/4 | |
| HW:P2 | 0.000000 | 0.000000 | 8000.000000 | FLOAT | Immediately | |

| 1206 | **CURRENT_FILTER_3_FREQUENCY** [n] 0 ...7 Index of param.-set | | | | | CR: **/ DD2/** | |
|---|---|---|---|---|---|---|---|
| | Natural frequency for current setpoint filter 3 | | | FDD/MSD | | 2/4 | **810D** |
| Hz | 0.0000 | 0.0000 | 1999.0000 | FLOAT | | immediately | |

| 1206 | **CURRENT_FILTER_3_FREQUENCY** [n] 0 ...7 Index of param.-set | | | | | CR: **/ DD2 /** | |
|---|---|---|---|---|---|---|---|
| D01 | Natural frequency for current setpoint filter 3 | | | FDD/MSD | ROT/LIN | 2/4 | **840D** |
| Hz | 0.0000 | 0.0000 | 8000.0000 | FLOAT | | immediately | |

| 1207 | **CURRENT_FILTER_3_DAMPING** | | | | CR: **DD2** | |
|---|---|---|---|---|---|---|
| D01<br>- | Damping for current setpoint filter 3 | | | MSD SLM FDD | 2/4 | |
| HW:P2 | 1.000000 | 0.050000 | 5.000000 | FLOAT | Immediately | |

| 1207 | **CURRENT_FILTER_3_DAMPING** [n] 0 ...7 Index of param.-set | | | | | CR: **/ DD2 /** | |
|---|---|---|---|---|---|---|---|
| D01 | Damping for current setpoint filter 3 | | | FDD/MSD | ROT/LIN | 2/4 | |
| - | 1.0000 | 0.0500 | 5.0000 | FLOAT | | immediately | |

| 1208 | **CURRENT_FILTER_4_FREQUENCY** | | | | CR: **DD2** | |
|---|---|---|---|---|---|---|
| D01<br>Hz | Natural frequency for current setpoint filter 4 | | | MSD SLM FDD | 2/4 | |
| HW:P2 | 0.000000 | 0.000000 | 8000.000000 | FLOAT | Immediately | |

| 1208 | **CURRENT_FILTER_4_FREQUENCY** [n] 0 ...7 Index of param.-set | | | | | CR: **/ DD2/** | |
|---|---|---|---|---|---|---|---|
| | Natural frequency for current setpoint filter 4 | | | FDD/MSD | | 2/4 | **810D** |
| Hz | 0.0000 | 0.0000 | 1999.0000 | FLOAT | | immediately | |

| 1208 | **CURRENT_FILTER_4_FREQUENCY** [n] 0 ...7 Index of param.-set | | | | | CR: **/ DD2 /** | |
|---|---|---|---|---|---|---|---|
| D01 | Natural frequency for current setpoint filter 4 | | | FDD/MSD | ROT/LIN | 2/4 | **840D** |
| Hz | 0.0000 | 0.0000 | 8000.0000 | FLOAT | | immediately | |

| 1209 | **CURRENT_FILTER_4_DAMPING** | | | | CR: **DD2** | |
|---|---|---|---|---|---|---|
| D01<br>- | Damping for current setpoint filter 4 | | | MSD SLM FDD | 2/4 | |
| HW:P2 | 1.000000 | 0.050000 | 5.000000 | FLOAT | Immediately | |

| 1209 | **CURRENT_FILTER_4_DAMPING** [n] 0 ...7 Index of param.-set | | | | | CR: **/ DD2 /** | |
|---|---|---|---|---|---|---|---|
| D01 | Damping for current setpoint filter 4 | | | FDD/MSD | ROT/LIN | 2/4 | |
| - | 1.0000 | 0.0500 | 5.0000 | FLOAT | | immediately | |

| 1210 | **CURRENT_FILTER_1_SUPPR_FREQ** | | | | CR: **DD2** | |
|---|---|---|---|---|---|---|
| D01<br>Hz | Blocking frequency for current setpoint filter 1 | | | MSD SLM FDD | 2/4 | |
| HW:P2 | 3500.000000 | 1.000000 | 7999.000000 | FLOAT | Immediately | |

| 1210 | **CURRENT_FILTER_1_SUPPR_FREQ** [n] 0 ...7 Index of param.-set | | | | | CR: **/ DD2/** | |
|---|---|---|---|---|---|---|---|
| | Blocking frequency for current setpoint filter 1 | | | FDD/MSD | | 2/4 | **810D** |
| Hz | 1600.0000 | 1.0000 | 3999.0000 | FLOAT | | immediately | |

| 1210 | **CURRENT_FILTER_1_SUPPR_FREQ** [n] 0 ...7 Index of param.-set | | | | | CR: **/ DD2 /** | |
|---|---|---|---|---|---|---|---|
| D01 | Blocking frequency for current setpoint filter 1 | | | FDD/MSD | ROT/LIN | 2/4 | **840D** |
| Hz | 3500.0000 | 1.0000 | 7999.0000 | FLOAT | | immediately | |

| 1211 | **CURRENT_FILTER_1_BANDWIDTH** | | | | CR: **DD2** | |
|---|---|---|---|---|---|---|
| D01<br>Hz | Bandwidth for current setpoint filter 1 | | | MSD SLM FDD | 2/4 | |
| HW:P2 | 500.000000 | 5.000000 | 7999.000000 | FLOAT | Immediately | |

© Siemens AG 2004 All Rights Reserved

| 1211 | **CURRENT_FILTER_1_BANDWIDTH** [n] 0 ...7 Index of param.-set | | | | | CR: **/ DD2/** | |
|---|---|---|---|---|---|---|---|
| | Bandwidth for current setpoint filter 1 | | | FDD/MSD | | 2/4 | **810D** |
| Hz | 400.0000 | 5.0000 | 3999.0000 | FLOAT | | immediately | |

| 1211 | **CURRENT_FILTER_1_BANDWIDTH** [n] 0 ...7 Index of param.-set | | | | | CR: **/ DD2 /** | |
|---|---|---|---|---|---|---|---|
| D01 | Bandwidth for current setpoint filter 1 | | | FDD/MSD | ROT/LIN | 2/4 | **840D** |
| Hz | 500.0000 | 5.0000 | 7999.0000 | FLOAT | | immediately | |

| 1212 | **CURRENT_FILTER_1_BW_NUM** | | | | CR: **DD2** | |
|---|---|---|---|---|---|---|
| D01, EXP<br>Hz | Bandwidth numerator for current setpoint filter 1 | | | MSD SLM FDD | 2/4 | |
| HW:P2 | 0.000000 | 0.000000 | 7999.000000 | FLOAT | Immediately | |

| 1212 | **CURRENT_FILTER_1_BW_NUM** [n] 0 ...7 Index of param.-set | | | | | CR: **/ DD2/** | |
|---|---|---|---|---|---|---|---|
| | Bandwidth numerator for current setpoint filter 1 | | | FDD/MSD | | 2/4 | **810D** |
| Hz | 0.0000 | 0.0000 | 3999.0000 | FLOAT | | immediately | |

| 1212 | **CURRENT_FILTER_1_BW_NUM** [n] 0 ...7 Index of param.-set | | | | | CR: **/ DD2 /** | |
|---|---|---|---|---|---|---|---|
| D01, EXP | Bandwidth numerator for current setpoint filter 1 | | | FDD/MSD | ROT/LIN | 2/4 | **840D** |
| Hz | 0.0000 | 0.0000 | 7999.0000 | FLOAT | | immediately | |

| 1213 | **CURRENT_FILTER_2_SUPPR_FREQ** | | | | CR: **DD2** | |
|---|---|---|---|---|---|---|
| D01<br>Hz | Blocking frequency for current setpoint filter 2 | | | MSD SLM FDD | 2/4 | |
| HW:P2 | 3500.000000 | 1.000000 | 7999.000000 | FLOAT | Immediately | |

| 1213 | **CURRENT_FILTER_2_SUPPR_FREQ** [n] 0 ...7 Index of param.-set | | | | | CR: **/ DD2/** | |
|---|---|---|---|---|---|---|---|
| | Blocking frequency for current setpoint filter 2 | | | FDD/MSD | | 2/4 | **810D** |
| Hz | 1200.0000 | 1.0000 | 1999.0000 | FLOAT | | immediately | |

| 1213 | **CURRENT_FILTER_2_SUPPR_FREQ** [n] 0 ...7 Index of param.-set | | | | | CR: **/ DD2 /** | |
|---|---|---|---|---|---|---|---|
| D01 | Blocking frequency for current setpoint filter 2 | | | FDD/MSD | ROT/LIN | 2/4 | **840D** |
| Hz | 3500.0000 | 1.0000 | 7999.0000 | FLOAT | | immediately | |

| 1214 | **CURRENT_FILTER_2_BANDWIDTH** | | | | CR: **DD2** | |
|---|---|---|---|---|---|---|
| D01<br>Hz | Bandwidth for current setpoint filter 2 | | | MSD SLM FDD | 2/4 | |
| HW:P2 | 500.000000 | 5.000000 | 7999.000000 | FLOAT | Immediately | |

| 1214 | **CURRENT_FILTER_2_BANDWIDTH** [n] 0 ...7 Index of param.-set | | | | | CR: **/ DD2/** | |
|---|---|---|---|---|---|---|---|
| | Bandwidth for current setpoint filter 2 | | | FDD/MSD | | 2/4 | **810D** |
| Hz | 400.0000 | 5.0000 | 1999.0000 | FLOAT | | immediately | |

| 1214 | **CURRENT_FILTER_2_BANDWIDTH** [n] 0 ...7 Index of param.-set | | | | | CR: **/ DD2 /** | |
|---|---|---|---|---|---|---|---|
| D01 | Bandwidth for current setpoint filter 2 | | | FDD/MSD | ROT/LIN | 2/4 | **840D** |
| Hz | 500.0000 | 5.0000 | 7999.0000 | FLOAT | | immediately | |

| 1215 | **CURRENT_FILTER_2_BW_NUM** | | | | CR: **DD2** | |
|---|---|---|---|---|---|---|
| D01, EXP<br>Hz | Bandwidth numerator for current setpoint filter 2 | | | MSD SLM FDD | 2/4 | |
| HW:P2 | 0.000000 | 0.000000 | 7999.000000 | FLOAT | Immediately | |

| 1215 | **CURRENT_FILTER_2_BW_NUM** [n] 0 ...7 Index of param.-set | | | | | CR: **/ DD2/** | |
|---|---|---|---|---|---|---|---|
| | Bandwidth numerator for current setpoint filter 2 | | | FDD/MSD | | 2/4 | **810D** |
| Hz | 0.0000 | 0.0000 | 1999.0000 | FLOAT | | immediately | |

| 1215 | **CURRENT_FILTER_2_BW_NUM** [n] 0 ...7 Index of param.-set | | | | | CR: **/ DD2 /** | |
|---|---|---|---|---|---|---|---|
| D01, EXP | Bandwidth numerator for current setpoint filter 2 | | | FDD/MSD | ROT/LIN | 2/4 | **840D** |
| Hz | 0.0000 | 0.0000 | 7999.0000 | FLOAT | | immediately | |

© Siemens AG 2004 All Rights Reserved

| 1216 | **CURRENT_FILTER_3_SUPPR_FREQ** | | | | CR: **DD2** | |
|---|---|---|---|---|---|---|
| D01<br>Hz | Blocking frequency for current setpoint filter 3 | | | MSD SLM FDD | 2/4 | |
| HW:P2 | 3500.000000 | 1.000000 | 7999.000000 | FLOAT | Immediately | |

| 1216 | **CURRENT_FILTER_3_SUPPR_FREQ** [n] 0 ...7 Index of param.-set | | | | CR: **/ DD2/** | |
|---|---|---|---|---|---|---|
| | Blocking frequency for current setpoint filter 3 | | | FDD/MSD | 2/4 | **810D** |
| Hz | 1200.0000 | 1.0000 | 1999.0000 | FLOAT | immediately | |

| 1216 | **CURRENT_FILTER_3_SUPPR_FREQ** [n] 0 ...7 Index of param.-set | | | | | CR: **/ DD2 /** | |
|---|---|---|---|---|---|---|---|
| D01 | Blocking frequency for current setpoint filter 3 | | | FDD/MSD | ROT/LIN | 2/4 | **840D** |
| Hz | 3500.0000 | 1.0000 | 7999.0000 | FLOAT | | immediately | |

| 1217 | **CURRENT_FILTER_3_BANDWIDTH** | | | | CR: **DD2** | |
|---|---|---|---|---|---|---|
| D01<br>Hz | Bandwidth for current setpoint filter 3 | | | MSD SLM FDD | 2/4 | |
| HW:P2 | 500.000000 | 5.000000 | 7999.000000 | FLOAT | Immediately | |

| 1217 | **CURRENT_FILTER_3_BANDWIDTH** [n] 0 ...7 Index of param.-set | | | | CR: **/ DD2/** | |
|---|---|---|---|---|---|---|
| | Bandwidth for current setpoint filter 3 | | | FDD/MSD | 2/4 | **810D** |
| Hz | 400.0000 | 5.0000 | 1999.0000 | FLOAT | immediately | |

| 1217 | **CURRENT_FILTER_3_BANDWIDTH** [n] 0 ...7 Index of param.-set | | | | | CR: **/ DD2 /** | |
|---|---|---|---|---|---|---|---|
| D01 | Bandwidth for current setpoint filter 3 | | | FDD/MSD | ROT/LIN | 2/4 | **840D** |
| Hz | 500.0000 | 5.0000 | 7999.0000 | FLOAT | | immediately | |

| 1218 | **CURRENT_FILTER_3_BW_NUM** | | | | CR: **DD2** | |
|---|---|---|---|---|---|---|
| D01, EXP<br>Hz | Bandwidth numerator for current setpoint filter 3 | | | MSD SLM FDD | 2/4 | |
| HW:P2 | 0.000000 | 0.000000 | 7999.000000 | FLOAT | Immediately | |

| 1218 | **CURRENT_FILTER_3_BW_NUM** [n] 0 ...7 Index of param.-set | | | | CR: **/ DD2/** | |
|---|---|---|---|---|---|---|
| | Bandwidth numerator for current setpoint filter 3 | | | FDD/MSD | 2/4 | **810D** |
| Hz | 0.0000 | 0.0000 | 1999.0000 | FLOAT | immediately | |

| 1218 | **CURRENT_FILTER_3_BW_NUM** [n] 0 ...7 Index of param.-set | | | | | CR: **/ DD2 /** | |
|---|---|---|---|---|---|---|---|
| D01, EXP | Bandwidth numerator for current setpoint filter 3 | | | FDD/MSD | ROT/LIN | 2/4 | **840D** |
| Hz | 0.0000 | 0.0000 | 7999.0000 | FLOAT | | immediately | |

| 1219 | **CURRENT_FILTER_4_SUPPR_FREQ** | | | | CR: **DD2** | |
|---|---|---|---|---|---|---|
| D01<br>Hz | Blocking frequency for current setpoint filter 4 | | | MSD SLM FDD | 2/4 | |
| HW:P2 | 3500.000000 | 1.000000 | 7999.000000 | FLOAT | Immediately | |

| 1219 | **CURRENT_FILTER_4_SUPPR_FREQ** [n] 0 ...7 Index of param.-set | | | | CR: **/ DD2/** | |
|---|---|---|---|---|---|---|
| | Blocking frequency for current setpoint filter 4 | | | FDD/MSD | 2/4 | **810D** |
| Hz | 1200.0000 | 1.0000 | 1999.0000 | FLOAT | immediately | |

| 1219 | **CURRENT_FILTER_4_SUPPR_FREQ** [n] 0 ...7 Index of param.-set | | | | | CR: **/ DD2 /** | |
|---|---|---|---|---|---|---|---|
| D01 | Blocking frequency for current setpoint filter 4 | | | FDD/MSD | ROT/LIN | 2/4 | **840D** |
| Hz | 3500.0000 | 1.0000 | 7999.0000 | FLOAT | | immediately | |

| 1220 | **CURRENT_FILTER_4_BANDWIDTH** | | | | CR: **DD2** | |
|---|---|---|---|---|---|---|
| D01<br>Hz | Bandwidth for current setpoint filter 4 | | | MSD SLM FDD | 2/4 | |
| HW:P2 | 500.000000 | 5.000000 | 7999.000000 | FLOAT | Immediately | |

| 1220 | **CURRENT_FILTER_4_BANDWIDTH** [n] 0 ...7 Index of param.-set | | | | CR: **/ DD2/** | |
|---|---|---|---|---|---|---|
| | Bandwidth for current setpoint filter 4 | | | FDD/MSD | 2/4 | **810D** |
| Hz | 400.0000 | 5.0000 | 1999.0000 | FLOAT | immediately | |

© Siemens AG 2004 All Rights Reserved

| 1220 | **CURRENT_FILTER_4_BANDWIDTH** [n] 0 ...7 Index of param.-set | | | | | CR: **/ DD2 /** | |
|---|---|---|---|---|---|---|---|
| D01 | Bandwidth for current setpoint filter 4 | | | FDD/MSD | ROT/LIN | 2/4 | **840D** |
| Hz | 500.0000 | 5.0000 | 7999.0000 | FLOAT | | immediately | |

| 1221 | **CURRENT_FILTER_4_BW_NUM** | | | | CR: **DD2** | |
|---|---|---|---|---|---|---|
| D01, EXP<br>Hz | Bandwidth numerator for current setpoint filter 4 | | | MSD SLM FDD | 2/4 | |
| HW:P2 | 0.000000 | 0.000000 | 7999.000000 | FLOAT | Immediately | |

| 1221 | **CURRENT_FILTER_4_BW_NUM** [n] 0 ...7 Index of param.-set | | | | | CR: **/ DD2/** | |
|---|---|---|---|---|---|---|---|
| | Bandwidth numerator for current setpoint filter 4 | | | FDD/MSD | | 2/4 | **810D** |
| Hz | 0.0000 | 0.0000 | 1999.0000 | FLOAT | | immediately | |

| 1221 | **CURRENT_FILTER_4_BW_NUM** [n] 0 ...7 Index of param.-set | | | | | CR: **/ DD2 /** | |
|---|---|---|---|---|---|---|---|
| D01, EXP | Bandwidth numerator for current setpoint filter 4 | | | FDD/MSD | ROT/LIN | 2/4 | **840D** |
| Hz | 0.0000 | 0.0000 | 7999.0000 | FLOAT | | immediately | |

| 1222 | **CURRENT_FILTER_1_BS_FREQ** | | | | CR: **DD2** | |
|---|---|---|---|---|---|---|
| D01, EXP<br>% | Natural BSF frequ. current setp. f. 1 | | | MSD SLM FDD | 2/4 | |
| HW:P2 | 100.000000 | 1.000000 | 100.000000 | FLOAT | Immediately | |

| 1222 | **CURRENT_FILTER_1_BS_FREQ** [n] 0 ...7 Index of param.-set | | | | | CR: **/ DD2 /** | |
|---|---|---|---|---|---|---|---|
| D01, EXP | Natural BSF frequ. current setp. f. 1 (not 810D) | | | FDD/MSD | ROT/LIN | 2/4 | **840D** |
| % | 100.0000 | 1.0000 | 100.0000 | FLOAT | | immediately | |

| 1223 | **CURRENT_FILTER_2_BS_FREQ** | | | | CR: **DD2** | |
|---|---|---|---|---|---|---|
| D01, EXP<br>% | Natural BSF frequ. current setp. f. 2 | | | MSD SLM FDD | 2/4 | |
| HW:P2 | 100.000000 | 1.000000 | 100.000000 | FLOAT | Immediately | |

| 1223 | **CURRENT_FILTER_2_BS_FREQ** [n] 0 ...7 Index of param.-set | | | | | CR: **/ DD2 /** | |
|---|---|---|---|---|---|---|---|
| D01, EXP | Natural BSF frequ. current setp. f. 2 (not 810D) | | | FDD/MSD | ROT/LIN | 2/4 | **840D** |
| % | 100.0000 | 1.0000 | 100.0000 | FLOAT | | immediately | |

| 1224 | **CURRENT_FILTER_3_BS_FREQ** | | | | CR: **DD2** | |
|---|---|---|---|---|---|---|
| D01, EXP<br>% | Natural BSF frequ. current setp. f. 3 | | | MSD SLM FDD | 2/4 | |
| HW:P2 | 100.000000 | 1.000000 | 100.000000 | FLOAT | Immediately | |

| 1224 | **CURRENT_FILTER_3_BS_FREQ** [n] 0 ...7 Index of param.-set | | | | | CR: **/ DD2 /** | |
|---|---|---|---|---|---|---|---|
| D01, EXP | Natural BSF frequ. current setp. f. 3 (not 810D) | | | FDD/MSD | ROT/LIN | 2/4 | **840D** |
| % | 100.0000 | 1.0000 | 100.0000 | FLOAT | | immediately | |

| 1225 | **CURRENT_FILTER_4_BS_FREQ** | | | | CR: **DD2** | |
|---|---|---|---|---|---|---|
| D01, EXP<br>% | Natural BSF frequ. current setp. f. 4 | | | MSD SLM FDD | 2/4 | |
| HW:P2 | 100.000000 | 1.000000 | 100.000000 | FLOAT | Immediately | |

| 1225 | **CURRENT_FILTER_4_BS_FREQ** [n] 0 ...7 Index of param.-set | | | | | CR: **/ DD2 /** | |
|---|---|---|---|---|---|---|---|
| D01, EXP | Natural BSF frequ. current setp. f. 4 (not 810D) | | | FDD/MSD | ROT/LIN | 2/4 | **840D** |
| % | 100.0000 | 1.0000 | 100.0000 | FLOAT | | immediately | |

| 1230 | **ROT: TORQUE_LIMIT_1**<br>**LIN: FORCE_LIMIT_1** | | | | CR: **DÜ1, DL1** | |
|---|---|---|---|---|---|---|
| D02, EXP<br>% | ROT: 1st torque limit<br>LIN: 1 st force threshold | | | MSD SLM FDD | 2/4 | |
| HW:P2 | 100.000000 | 5.000000 | 900.000000 | FLOAT | Immediately | |

| 1230 | **TORQUE_LIMIT_1** [n] 0 ...7 Index of param.-set | | | | | CR: **/DÜ1 /** | |
|---|---|---|---|---|---|---|---|
| D02, EXP | 1st torque limit | | | FDD/MSD | ROT | 2/4 | |
| % | 100.0000 | 5.0000 | 900.0000 | FLOAT | | immediately | |

© Siemens AG 2004 All Rights Reserved

| 1230 | **FORCE_LIMIT_1** [n] 0 ...7 Index of param.-set | | | | | CR: **/ DL1/** | |
|---|---|---|---|---|---|---|---|
| D02, EXP | 1 st force threshold | | | FDD | LIN | 2/4 | |
| % | 100.0000 | 5.0000 | 900.0000 | FLOAT | | immediately | |

| 1231 | **ROT: TORQUE_LIMIT_2**<br>**LIN: FORCE_LIMIT_2** | | | | CR: **DÜ1, DL1** | |
|---|---|---|---|---|---|---|
| D02, EXP<br>% | ROT: 2nd torque limit<br>LIN: 2nd force threshold | | | MSD SLM FDD | 2/4 | |
| HW:P2 | 100.000000 | 5.000000 | 100.000000 | FLOAT | Immediately | |

| 1231 | **TORQUE_LIMIT_2** | | | | | CR: **/DÜ1 /** | |
|---|---|---|---|---|---|---|---|
| D02, EXP | 2nd torque limit (not 810D) | | | FDD/MSD | ROT | 2/4 | **840D** |
| % | 100.0000 | 5.0000 | 100.0000 | FLOAT | | immediately | |

| 1231 | **FORCE_LIMIT_2** | | | | | CR: **/ DL1/** | |
|---|---|---|---|---|---|---|---|
| D02, EXP | 2nd force threshold (not 810D) | | | FDD | LIN | 2/4 | **840D** |
| % | 100.0000 | 5.0000 | 100.0000 | FLOAT | | immediately | |

| 1232 | **ROT: TORQUE_LIMIT_SWITCH_SPEED**<br>**LIN: FORCE_LIMIT_SWITCH_SPEED** | | | | CR: **DÜ1, DL1** | |
|---|---|---|---|---|---|---|
| D02, EXP<br>ROT: 1/min<br>LIN: m/min | ROT: Changeover speed from MD 1230 to MD 1231<br>LIN: Changeover speed from MD 1230 to MD 1231 | | | MSD SLM FDD | 2/4 | |
| HW:P2 | ROT: 6000.000000<br>LIN: 120.000000 | 0.000000 | 100000.000000 | FLOAT | Immediately | |

| 1232 | **FORCE_LIMIT_SWITCH_SPEED** | | | | | CR: **/ DL1/** | |
|---|---|---|---|---|---|---|---|
| D02, EXP | Changeover speed from MD 1230 to MD 1231 (not 810D) | | | FDD | LIN | 2/4 | **840D** |
| m/min | 120.0000 | 0.0000 | 100000.0000 | FLOAT | | immediately | |

| 1232 | **TORQUE_LIMIT_SWITCH_SPEED** | | | | | CR: **/DÜ1 /** | |
|---|---|---|---|---|---|---|---|
| D02, EXP | Changeover speed from MD 1230 to MD 1231 (not 810D) | | | FDD/MSD | ROT | 2/4 | **840D** |
| 1/min | 6000.0000 | 0.0000 | 100000.0000 | FLOAT | | immediately | |

| 1233 | **ROT: TORQUE_LIMIT_GENERATOR**<br>**LIN: LIMIT_GENERATOR** | | | | CR: **DÜ1, DL1** | |
|---|---|---|---|---|---|---|
| D02, EXP<br>% | ROT: Regenerative limiting<br>LIN: | | | MSD SLM FDD | 2/4 | |
| HW:P2 | 100.000000 | 5.000000 | 100.000000 | FLOAT | Immediately | |

| 1233 | **TORQUE_LIMIT_GENERATOR** [n] 0 ...7 Index of param.-set | | | | | CR: **/DÜ1 /** | |
|---|---|---|---|---|---|---|---|
| D02, EXP | Regenerative limiting (not 810D) | | | FDD/MSD | ROT | 2/4 | **840D** |
| % | 100.0000 | 5.0000 | 100.0000 | FLOAT | | immediately | |

| 1233 | **LIMIT_GENERATOR** [n] 0 ...7 Index of param.-set | | | | | CR: **/ DL1/** | |
|---|---|---|---|---|---|---|---|
| D02, EXP | Generator force limiting (not 810D) | | | FDD | LIN | 2/4 | **840D** |
| % | 100.0000 | 5.0000 | 100.0000 | FLOAT | | immediately | |

| 1234 | **ROT: TORQUE_LIMIT_SWITCH_HYST**<br>**LIN: FORCE_LIMIT_SWITCH_HYST** | | | | CR: **DÜ1, DL1** | |
|---|---|---|---|---|---|---|
| D02, EXP<br>ROT: 1/min<br>LIN: m/min | ROT: Hysteresis MD 1232<br>LIN: | | | MSD SLM FDD | 2/4 | |
| HW:P2 | ROT: 50.000000<br>LIN: 3.000000 | 0.000000 | 1000.000000 | FLOAT | Immediately | |

| 1234 | **FORCE_LIMIT_SWITCH_HYST** | | | | | CR: **/ DL1/** | |
|---|---|---|---|---|---|---|---|
| D02, EXP | Hysteresis MD 1232 (not 810D) | | | FDD | LIN | 2/4 | **840D** |
| m/min | 3.0000 | 0.0000 | 1000.0000 | FLOAT | | immediately | |

© Siemens AG 2004 All Rights Reserved

| 1234 | TORQUE_LIMIT_SWITCH_HYST | | | | | CR: /DÜ1 / | |
|---|---|---|---|---|---|---|---|
| D02, EXP | Hysteresis MD 1232 (not 810D) | | | FDD/MSD | ROT | 2/4 | 840D |
| 1/min | 50.0000 | 0.0000 | 1000.0000 | FLOAT | | immediately | |

| 1235 | POWER_LIMIT_1 | | | | CR: DÜ1 | |
|---|---|---|---|---|---|---|
| D02, EXP<br>% | 1st power limit | | | MSD SLM FDD | 2/4 | |
| HW:P2 | 100.000000 | 5.000000 | 900.000000 | FLOAT | Immediately | |

| 1235 | POWER_LIMIT_1 [n] 0 ...7 Index of param.-set | | | | | CR: / DÜ1 / | |
|---|---|---|---|---|---|---|---|
| D02, EXP | 1st power limit | | | FDD/MSD | ROT/LIN | 2/4 | |
| % | 100.0000 | 5.0000 | 900.0000 | FLOAT | | immediately | |

| 1236 | POWER_LIMIT_2 | | | | CR: DÜ1 | |
|---|---|---|---|---|---|---|
| D02, EXP<br>% | 2nd power limit | | | MSD SLM FDD | 2/4 | |
| HW:P2 | 100.000000 | 5.000000 | 100.000000 | FLOAT | Immediately | |

| 1236 | POWER_LIMIT_2 | | | | | CR: / DÜ1 / | |
|---|---|---|---|---|---|---|---|
| D02, EXP | 2nd power limit (not 810D) | | | FDD/MSD | ROT/LIN | 2/4 | 840D |
| % | 100.0000 | 5.0000 | 100.0000 | FLOAT | | immediately | |

| 1237 | POWER_LIMIT_GENERATOR | | | | CR: DÜ1 | |
|---|---|---|---|---|---|---|
| D02, EXP<br>kW | Maximum regenerative power | | | MSD SLM FDD | 2/4 | |
| HW:P2 | 100.000000 | 0.100000 | 500.000000 | FLOAT | Immediately | |

| 1237 | POWER_LIMIT_GENERATOR | | | | | CR: / DÜ1/ | |
|---|---|---|---|---|---|---|---|
| | Maximum regenerative power | | | FDD/MSD | | 2/4 | 810D |
| kW | 100.0000 | 0.3000 | 500.0000 | FLOAT | | immediately | |

| 1237 | POWER_LIMIT_GENERATOR | | | | | CR: / DÜ1 / | |
|---|---|---|---|---|---|---|---|
| D02, EXP | Maximum regenerative power | | | FDD/MSD | ROT/LIN | 2/4 | 840D |
| kW | 100.0000 | 0.1000 | 500.0000 | FLOAT | | immediately | |

| 1238 | CURRENT_LIMIT | | | | CR: DÜ1 | |
|---|---|---|---|---|---|---|
| D02<br>% | Motor current limit | | | MSD | 2/4 | |
| HW:P2 | 150.000000 | 0.000000 | 400.000000 | FLOAT | Immediately | |

| 1238 | CURRENT_LIMIT | | | | | CR: / DÜ1/ | |
|---|---|---|---|---|---|---|---|
| | Motor current limit | | | MSD | | 2/4 | 810D |
| % | 150.0000 | 0.0000 | 300.0000 | FLOAT | | immediately | |

| 1238 | CURRENT_LIMIT | | | | | CR: /DÜ1 / | |
|---|---|---|---|---|---|---|---|
| D02 | Motor current limit | | | MSD | ROT | 2/4 | 840D |
| % | 150.0000 | 0.0000 | 400.0000 | FLOAT | | immediately | |

| 1239 | ROT: TORQUE_LIMIT_FOR_SETUP<br>LIN: FORCE_LIMIT_FOR_SETUP | | | | CR: DÜ1, DL1 | |
|---|---|---|---|---|---|---|
| D02<br>% | ROT: Torque limit in setting-up operation<br>LIN: Force limit in setting-up operation | | | MSD SLM FDD | 2/4 | |
| HW:P2 | 1.000000 | 0.500000 | 100.000000 | FLOAT | Immediately | |

| 1239 | TORQUE_LIMIT_FOR_SETUP | | | | | CR: /DÜ1 / | |
|---|---|---|---|---|---|---|---|
| D02 | Torque limit in setting-up operation | | | FDD/MSD | ROT | 2/4 | |
| % | 1.0000 | 0.5000 | 100.0000 | FLOAT | | immediately | |

| 1239 | FORCE_LIMIT_FOR_SETUP | | | | | CR: / DL1/ | |
|---|---|---|---|---|---|---|---|
| D02 | Force limit in setting-up operation | | | FDD | LIN | 2/4 | |
| % | 1.0000 | 0.5000 | 100.0000 | FLOAT | | immediately | |

© Siemens AG 2004 All Rights Reserved

| 1245 | CURRENT_SMOOTH_SPEED | | | | | CR: DD2, DL1 | |
|---|---|---|---|---|---|---|---|
| EXP<br>ROT: 1/min<br>LIN: m/min | Threshold speed dep. on M setpoint smoothing | | | MSD SLM FDD | | 2/4 | |
| HW:P2 | 0.000000 | 0.000000 | 100000.000000 | FLOAT | | Immediately | |

| 1245 | CURRENT_SMOOTH_SPEED | | | | | CR: / DL1/ | |
|---|---|---|---|---|---|---|---|
| EXP | Threshold speed dependend F-setpoint smoothing (not 810D) | | | FDD | LIN | 2/4 | 840D |
| m/min | 0.0000 | 0.0000 | 100000.0000 | FLOAT | | immediately | |

| 1245 | CURRENT_SMOOTH_SPEED | | | | | CR: /DD2 / | |
|---|---|---|---|---|---|---|---|
| EXP | Threshold speed dep. on M setpoint smoothing (not 810D) | | | FDD/MSD | ROT | 2/4 | 840D |
| 1/min | 0.0000 | 0.0000 | 100000.0000 | FLOAT | | immediately | |

| 1246 | CURRENT_SMOOTH_HYSTERESIS | | | | | CR: DD2, DL1 | |
|---|---|---|---|---|---|---|---|
| EXP<br>ROT: 1/min<br>LIN: m/min | Hysteresis speed dep. M setpoint smoothing | | | MSD SLM FDD | | 2/4 | |
| HW:P2 | ROT: 50.000000<br>LIN: 3.000000 | 0.000000 | 1000.000000 | FLOAT | | Immediately | |

| 1246 | CURRENT_SMOOTH_HYSTERESIS | | | | | CR: /DD2 / | |
|---|---|---|---|---|---|---|---|
| EXP | Hysteresis speed dep. M setpoint smoothing (not 810D) | | | FDD/MSD | ROT | 2/4 | 840D |
| 1/min | 50.0000 | 0.0000 | 1000.0000 | FLOAT | | immediately | |

| 1246 | CURRENT_SMOOTH_HYSTERESIS | | | | | CR: / DL1/ | |
|---|---|---|---|---|---|---|---|
| EXP | Hysteresis speed dependend F-setpoint smoothing (not 810D) | | | FDD | LIN | 2/4 | 840D |
| m/min | 3.0000 | 0.0000 | 1000.0000 | FLOAT | | immediately | |

| 1247 | MOTOR_SWITCH_SPEED1 | | | | | CR: DE1 | |
|---|---|---|---|---|---|---|---|
| EXP<br>1/min | Speed threshold for motor changeover | | | MSD | | 2/4 | |
| HW:P2 | 100000.000000 | 0.0 | 100000.000000 | FLOAT | | Immediately | |

| 1247 | MOTOR_SWITCH_SPEED | | | | | CR: /DE1 / | |
|---|---|---|---|---|---|---|---|
| EXP | Speed threshold for motor changeover (not 810D) | | | MSD | ROT | 2/4 | 840D |
| 1/min | 100000.0000 | 0.0000 | 100000.0000 | FLOAT | | immediately | |

| 1248 | MOTOR_SWITCH_SPEED2 | | | | | CR: DE1 | |
|---|---|---|---|---|---|---|---|
| EXP<br>1/min | Speed threshold 2 motor switchover | | | MSD | | 2/4 | |
| HW:P2 | 100000.000000 | 0.0 | 100000.000000 | FLOAT | | Immediately | |

| 1250 | ACTUAL_CURRENT_FILTER_FREQ | | | | | CR: DB1 | |
|---|---|---|---|---|---|---|---|
| D04<br>Hz | Transition frequency for actual current smoothing | | | MSD SLM FDD | | 2/4 | |
| HW:P2 | 100.000000 | 0.000000 | 8000.000000 | FLOAT | | Immediately | |

| 1250 | ACTUAL_CURRENT_FILTER_FREQ | | | | | CR: / DB1/ | |
|---|---|---|---|---|---|---|---|
| | Transition frequency for actual current smoothing | | | FDD/MSD | | 2/4 | 810D |
| Hz | 100.0000 | 0.0000 | 3999.0000 | FLOAT | | immediately | |

| 1250 | ACTUAL_CURRENT_FILTER_FREQ | | | | | CR: / DB1 / | |
|---|---|---|---|---|---|---|---|
| D04 | Transition frequency for actual current smoothing | | | FDD/MSD | ROT/LIN | 2/4 | 840D |
| Hz | 100.0000 | 0.0000 | 8000.0000 | FLOAT | | immediately | |

© Siemens AG 2004 All Rights Reserved

| 1251 | LOAD_SMOOTH_TIME | | | | | CR: DD1 | |
|---|---|---|---|---|---|---|---|
| -<br>ms | Time constant for load smoothing | | | MSD SLM FDD | | 2/4 | |
| HW:P2 | 0.000000 | 0.000000 | 1000.000000 | FLOAT | | Immediately | |

| 1251 | LOAD_SMOOTH_TIME | | | | | CR: / DD1 / | |
|---|---|---|---|---|---|---|---|
| - | Time constant for load smoothing (not 810D) | | | FDD/MSD | ROT/LIN | 2/4 | 840D |
| ms | 0.0000 | 0.0000 | 1000.0000 | FLOAT | | immediately | |

| 1252 | ROT: TORQUE_FILTER_FREQUENCY<br>LIN: FORCE_FILTER_FREQUENCY | | | | | CR: DB1, DL1 | |
|---|---|---|---|---|---|---|---|
| D04<br>Hz | ROT: Transition frequency of torque setpoint smoothing<br>LIN: Transition freq. for the force setpoint smoothing | | | MSD SLM FDD | | 2/4 | |
| HW:P2 | 100.000000 | 0.000000 | 8000.000000 | FLOAT | | Immediately | |

| 1252 | TORQUE_FILTER_FREQUENCY | | | | | CR: / DB1/ | |
|---|---|---|---|---|---|---|---|
| | Transition frequency of torque setpoint smoothing | | | FDD/MSD | | 2/4 | 810D |
| Hz | 100.0000 | 0.0000 | 3999.0000 | FLOAT | | immediately | |

| 1252 | FORCE_FILTER_FREQUENCY | | | | | CR: / DL1/ | |
|---|---|---|---|---|---|---|---|
| D04 | Transition freq. for the force setpoint smoothing | | | FDD | LIN | 2/4 | 840D |
| Hz | 100.0000 | 0.0000 | 8000.0000 | FLOAT | | immediately | |

| 1252 | TORQUE_FILTER_FREQUENCY | | | | | CR: /DB1 / | |
|---|---|---|---|---|---|---|---|
| D04 | Transition frequency of torque setpoint smoothing | | | FDD/MSD | ROT | 2/4 | 840D |
| Hz | 100.0000 | 0.0000 | 8000.0000 | FLOAT | | immediately | |

| 1254 | CURRENT_MONITOR_FILTER_TIME | | | | | CR: DÜ1 | |
|---|---|---|---|---|---|---|---|
| D02, EXP<br>ms | Time constant for current monitoring | | | MSD SLM FDD | | 2/4 | |
| HW:P2 | 0.500000 | 0.000000 | 2.000000 | FLOAT | | Immediately | |

| 1254 | CURRENT_MONITOR_FILTER_TIME | | | | | CR: / DÜ1 / | |
|---|---|---|---|---|---|---|---|
| D02, EXP | Time constant for current monitoring | | | FDD/MSD | ROT/LIN | 2/4 | |
| ms | 0.5000 | 0.0000 | 2.0000 | FLOAT | | immediately | |

| 1260 | I2T_S6_REDUCTION | | | | | CR: DM1 | |
|---|---|---|---|---|---|---|---|
| D02, EXP<br>% | i2t limit., limit current power module S6 | | | MSD SLM FDD | | 2/4 | |
| HW:P2 | 100.0 | 25.0 | 100.0 | FLOAT | | Immediately | |

| 1261 | I2T_NOMINAL_REDUCTION | | | | | CR: DM1 | |
|---|---|---|---|---|---|---|---|
| D02, EXP<br>% | i2t limit. rated current power module | | | MSD SLM FDD | | 2/4 | |
| HW:P2 | ROT: 110.0<br>LIN: 110.0 | 25.0 | ROT: 110.0<br>LIN: 110.0 | FLOAT | | Immediately | |

| 1262 | DIAGNOSIS_I2T | | | | | CR: DM1 | |
|---|---|---|---|---|---|---|---|
| D04<br>s | i2t time in limitation | | | MSD SLM FDD | | 2/4 | |
| HW:P2 | 0.0 | 0.0 | 100000.0 | FLOAT | | Immediately | |

| 1263 | LIMIT_I2T | | | | | CR: DM1 | |
|---|---|---|---|---|---|---|---|
| D04<br>% | i2t actual limitation factor | | | MSD SLM FDD | | 2/4 | |
| HW:P2 | 0.0 | 0.0 | 100.0 | FLOAT | | Immediately | |

| 1264 | LOAD_I2T | | | | | CR: DM1 | |
|---|---|---|---|---|---|---|---|
| D04<br>% | i2t Current utilization factor | | | MSD SLM FDD | | 2/4 | |
| HW:P2 | 0.0 | 0.0 | 100.0 | FLOAT | | Immediately | |

© Siemens AG 2004 All Rights Reserved

| 1300 | SAFETY_CYCLE_TIME | | | | | CR: FBSI | |
|---|---|---|---|---|---|---|---|
| D07<br>31,25 µs | SI monitoring cycle | | | MSD SLM FDD | | 2/4 | |
| HW:P2 | 384 | 16 | 800 | UNS.WORD | | Power On | |

| 1300 | SAFETY_CYCLE_TIME | | | | | CR: / FBSI / | |
|---|---|---|---|---|---|---|---|
| D07 | SI monitoring cycle (not 810D) | | | FDD/MSD | ROT/LIN | 2/4 | 840D |
| 31.25 us | 384 | 16 | 800 | UNS. WORD | | PowerOn | |

| 1301 | SAFE_FUNCTION_ENABLE | | | | | CR: FBSI | |
|---|---|---|---|---|---|---|---|
| D07<br>- | Enable safety functions | | | MSD SLM FDD | | 2/4 | |
| HW:P2 | 0x0000 | 0x0000 | 0xffeb | UNS.WORD | | Power On | |

| 1301 | SAFE_FUNCTION_ENABLE | | | | | CR: / FBSI / | |
|---|---|---|---|---|---|---|---|
| D07 | Enable safety functions (not 810D) | | | FDD/MSD | ROT/LIN | 2/4 | 840D |
| - | 0 | 0 | fffb | UNS. WORD | | PowerOn | |

| 1302 | SAFE_IS_ROT_AX | | | | | CR: FBSI | |
|---|---|---|---|---|---|---|---|
| D07<br>- | Axis-specific bits of safety functions | | | MSD SLM FDD | | 2/4 | |
| HW:P2 | 0x0000 | 0x0000 | 0x0003 | UNS.WORD | | Power On | |

| 1302 | SAFE_IS_ROT_AX | | | | | CR: / FBSI / | |
|---|---|---|---|---|---|---|---|
| D07 | Axis-specific bits of safety functions (not 810D) | | | FDD/MSD | ROT/LIN | 2/4 | 840D |
| - | 0 | 0 | 3 | UNS. WORD | | PowerOn | |

| 1305 | SAFE_MODULO_RANGE | | | | | CR: FBSI | |
|---|---|---|---|---|---|---|---|
| D07<br>mdegrees | Actual value range for SN for rotary axes | | | MSD SLM FDD | | 2/4 | |
| HW:P2 | 0 | 0 | 737280000 | UNS.DWORD | | Power On | |

| 1305 | SAFE_MODULO_RANGE | | | | | CR: / FBSI / | |
|---|---|---|---|---|---|---|---|
| D07 | Actual value range for SN for rotary axes (not 810D) | | | FDD/MSD | ROT/LIN | 2/4 | 840D |
| mDegrees | 0 | 0 | 737280000 | UNS. DWORD | | PowerOn | |

| 1316 | SAFE_ENC_CONFIG | | | | | CR: FBSI | |
|---|---|---|---|---|---|---|---|
| D07<br>- | Motor encoder configuration of safety functions | | | MSD SLM FDD | | 2/4 | |
| HW:P2 | 0x0000 | 0x0000 | 0x0007 | UNS.WORD | | Power On | |

| 1316 | SAFE_ENC_CONFIG | | | | | CR: / FBSI / | |
|---|---|---|---|---|---|---|---|
| D07 | Motor encoder configuration of safety functions (not 810D) | | | FDD/MSD | ROT/LIN | 2/4 | 840D |
| - | 0 | 0 | 7 | UNS. WORD | | PowerOn | |

| 1317 | SAFE_ENC_GRID_POINT_DIST | | | | | CR: FBSI | |
|---|---|---|---|---|---|---|---|
| D07<br>µm, mdegrees | Grid spacing of linear scale | | | MSD SLM FDD | | 2/4 | |
| HW:P2 | 10.000000 | 0.010000 | 8000.000000 | FLOAT | | Power On | |

| 1317 | SAFE_ENC_GRID_POINT_DIST | | | | | CR: / FBSI / | |
|---|---|---|---|---|---|---|---|
| D07 | Grid spacing of linear scale (not 810D) | | | FDD/MSD | ROT/LIN | 2/4 | 840D |
| um, mDegrees | 10.0000 | 0.0100 | 8000.0000 | FLOAT | | PowerOn | |

| 1318 | SAFE_ENC_RESOL | | | | | CR: FBSI | |
|---|---|---|---|---|---|---|---|
| D07<br>- | Encoder lines per revolution | | | MSD SLM FDD | | 2/4 | |
| HW:P2 | 2048 | 1 | 100000 | UNS.DWORD | | Power On | |

© Siemens AG 2004 All Rights Reserved

| 1318 | SAFE_ENC_RESOL | | | | | CR: / FBSI / | |
|---|---|---|---|---|---|---|---|
| D07 | Encoder lines per revolution (not 810D) | | | FDD/MSD | ROT/LIN | 2/4 | 840D |
| - | 2048 | 1 | 100000 | UNS. DWORD | | PowerOn | |

| 1320 | SAFE_ENC_GEAR_PITCH | | | | CR: FBSI | |
|---|---|---|---|---|---|---|
| D07<br>mm/rev | Spindle pitch | | | MSD SLM FDD | 2/4 | |
| HW:P2 | 10.000000 | 0.100000 | 8388.000000 | FLOAT | Power On | |

| 1320 | SAFE_ENC_GEAR_PITCH | | | | | CR: / FBSI / | |
|---|---|---|---|---|---|---|---|
| D07 | Spindle pitch (not 810D) | | | FDD/MSD | ROT/LIN | 2/4 | 840D |
| mm/rev | 10.0000 | 0.1000 | 8388.0000 | FLOAT | | PowerOn | |

| 1321 | SAFE_ENC_GEAR_DENOM | | | | CR: FBSI | |
|---|---|---|---|---|---|---|
| D07<br>- | Denominator of gear unit encoder / load | | | MSD SLM FDD | 2/4 | |
| HW:P2 | 1 | 1 | 8388607 | UNS.DWORD | Power On | |

| 1321 | SAFE_ENC_GEAR_DENOM [n] 0 ...7 Index of param.-set | | | | | CR: / FBSI / | |
|---|---|---|---|---|---|---|---|
| D07 | Denominator of gear unit encoder / load (not 810D) | | | FDD/MSD | ROT/LIN | 2/4 | 840D |
| - | 1 | 1 | 8388607 | UNS. DWORD | | PowerOn | |

| 1322 | SAFE_ENC_GEAR_NUMERA | | | | CR: FBSI | |
|---|---|---|---|---|---|---|
| D07<br>- | Numerator of gear unit encoder / load | | | MSD SLM FDD | 2/4 | |
| HW:P2 | 1 | 1 | 8388607 | UNS.DWORD | Power On | |

| 1322 | SAFE_ENC_GEAR_NUMERA [n] 0 ...7 Index of param.-set | | | | | CR: / FBSI / | |
|---|---|---|---|---|---|---|---|
| D07 | Numerator of gear unit encoder / load (not 810D) | | | FDD/MSD | ROT/LIN | 2/4 | 840D |
| - | 1 | 1 | 8388607 | UNS. DWORD | | PowerOn | |

| 1326 | SAFE_ENC_FREQ_LIMIT | | | | CR: DB1 | |
|---|---|---|---|---|---|---|
| D07<br>Hz | Encoder limit frequency | | | MSD SLM FDD | 2/4 | |
| HW:P2 | 300000 | 300000 | 420000 | UNS.DWORD | Power On | |

| 1330 | SAFE_STANDSTILL_TOL | | | | CR: FBSI | |
|---|---|---|---|---|---|---|
| D07<br>µm, mdegrees | Standstill tolerance (SBH) | | | MSD SLM FDD | 2/4 | |
| HW:P2 | 1000 | 1 | 100000 | DWORD | Power On | |

| 1330 | SAFE_STANDSTILL_TOL | | | | | CR: / FBSI / | |
|---|---|---|---|---|---|---|---|
| D07 | Standstill tolerance (SBH) (not 810D) | | | FDD/MSD | ROT/LIN | 2/4 | 840D |
| um, mDegrees | 1000 | 1 | 100000 | DWORD | | PowerOn | |

| 1331 | SAFE_VELO_LIMIT | | | | CR: FBSI | |
|---|---|---|---|---|---|---|
| D07<br>mm/min, rpm | Limit values for SG | | | MSD SLM FDD | 2/4 | |
| HW:P2 | 2000.000000 | 0.000000 | 1000000.000000 | FLOAT | Power On | |

| 1331 | SAFE_VELO_LIMIT [n] 0 ...3 Index of param.-set | | | | | CR: / FBSI / | |
|---|---|---|---|---|---|---|---|
| D07 | Limit values for SG (not 810D) | | | FDD/MSD | ROT/LIN | 2/4 | 840D |
| mm/min, rev/min | 2000.0000 | 0.0000 | 1000000.0000 | FLOAT | | PowerOn | |

| 1332 | SAFE_VELO_OVR_FACTOR | | | | CR: FBSI | |
|---|---|---|---|---|---|---|
| D07<br>% | Override factor for SG | | | MSD SLM FDD | 2/4 | |
| HW:P2 | 100 | 1 | 100 | UNS.WORD | Power On | |

© Siemens AG 2004 All Rights Reserved

| 1332 | **SAFE_VELO_OVR_FACTOR** [n] 0 ...15 Index of param.-set | | | | | CR: **/ FBSI /** | |
|---|---|---|---|---|---|---|---|
| D07 | Override factor for SG (not 810D) | | | FDD/MSD | ROT/LIN | 2/4 | **840D** |
| % | 100 | 1 | 100 | UNS. WORD | | PowerOn | |

| 1334 | **SAFE_POS_LIMIT_PLUS** | | | | CR: **FBSI** |
|---|---|---|---|---|---|
| D07<br>µm, mdegrees | Upper limit value for SE | | | MSD SLM FDD | 2/4 |
| HW:P2 | 100000000 | -2147000000 | 2147000000 | DWORD | Power On |

| 1334 | **SAFE_POS_LIMIT_PLUS** [n] 0 ...1 Index of param.-set | | | | | CR: **/ FBSI /** | |
|---|---|---|---|---|---|---|---|
| D07 | Upper limit value for SE (not 810D) | | | FDD/MSD | ROT/LIN | 2/4 | **840D** |
| um, mDegrees | 100000000 | -2147000000 | 2147000000 | DWORD | | PowerOn | |

| 1335 | **SAFE_POS_LIMIT_MINUS** | | | | CR: **FBSI** |
|---|---|---|---|---|---|
| D07<br>µm, mdegrees | Lower limit value for SE | | | MSD SLM FDD | 2/4 |
| HW:P2 | -100000000 | -2147000000 | 2147000000 | DWORD | Power On |

| 1335 | **SAFE_POS_LIMIT_MINUS** [n] 0 ...1 Index of param.-set | | | | | CR: **/ FBSI /** | |
|---|---|---|---|---|---|---|---|
| D07 | Lower limit value for SE (not 810D) | | | FDD/MSD | ROT/LIN | 2/4 | **840D** |
| um, mDegrees | -100000000 | -2147000000 | 2147000000 | DWORD | | PowerOn | |

| 1336 | **SAFE_CAM_POS_PLUS** | | | | CR: **FBSI** |
|---|---|---|---|---|---|
| D07<br>µm, mdegrees | Plus cam position SN | | | MSD SLM FDD | 2/4 |
| HW:P2 | 10000 | -2147000000 | 2147000000 | DWORD | Power On |

| 1336 | **SAFE_CAM_POS_PLUS** [n] 0 ...3 Index of param.-set | | | | | CR: **/ FBSI /** | |
|---|---|---|---|---|---|---|---|
| D07 | Plus cam position SN (not 810D) | | | FDD/MSD | ROT/LIN | 2/4 | **840D** |
| um, mDegrees | 10000 | -2147000000 | 2147000000 | DWORD | | PowerOn | |

| 1337 | **SAFE_CAM_POS_MINUS** | | | | CR: **FBSI** |
|---|---|---|---|---|---|
| D07<br>µm, mdegrees | Minus cam position SN | | | MSD SLM FDD | 2/4 |
| HW:P2 | -10000 | -2147000000 | 2147000000 | DWORD | Power On |

| 1337 | **SAFE_CAM_POS_MINUS** [n] 0 ...3 Index of param.-set | | | | | CR: **/ FBSI /** | |
|---|---|---|---|---|---|---|---|
| D07 | Minus cam position SN (not 810D) | | | FDD/MSD | ROT/LIN | 2/4 | **840D** |
| um, mDegrees | -10000 | -2147000000 | 2147000000 | DWORD | | PowerOn | |

| 1340 | **SAFE_CAM_TOL** | | | | CR: **FBSI** |
|---|---|---|---|---|---|
| D07<br>µm, mdegrees | Tolerance for safe cams | | | MSD SLM FDD | 2/4 |
| HW:P2 | 100 | 1 | 10000 | DWORD | Power On |

| 1340 | **SAFE_CAM_TOL** | | | | | CR: **/ FBSI /** | |
|---|---|---|---|---|---|---|---|
| D07 | Tolerance for safe cams (not 810D) | | | FDD/MSD | ROT/LIN | 2/4 | **840D** |
| um, mDegrees | 100 | 1 | 10000 | DWORD | | PowerOn | |

| 1342 | **SAFE_POS_TOL** | | | | CR: **FBSI** |
|---|---|---|---|---|---|
| D07<br>µm, mdegrees | Actual value tolerance for the cross-check | | | MSD SLM FDD | 2/4 |
| HW:P2 | 100 | 1 | 360000 | DWORD | Power On |

| 1342 | **SAFE_POS_TOL** | | | | | CR: **/ FBSI /** | |
|---|---|---|---|---|---|---|---|
| D07 | Actual value tolerance for the cross-check (not 810D) | | | FDD/MSD | ROT/LIN | 2/4 | **840D** |
| um, mDegrees | 100 | 1 | 360000 | DWORD | | PowerOn | |

| 1344 | **SAFE_REFP_POS_TOL** | | | | CR: **FBSI** |
|---|---|---|---|---|---|
| D07<br>µm, mdegrees | Actual value tolerance safe axis position | | | MSD SLM FDD | 2/4 |
| HW:P2 | 10 | 0 | 36000 | DWORD | Power On |

© Siemens AG 2004 All Rights Reserved

| 1344 | SAFE_REFP_POS_TOL | | | | | CR: / FBSI / | |
|---|---|---|---|---|---|---|---|
| D07 | Actual value tolerance safe axis position (not 810D) | | | FDD/MSD | ROT/LIN | 2/4 | 840D |
| um, mDegrees | 10 | 0 | 36000 | DWORD | | PowerOn | |

| 1346 | SAFE_VELO_X | | | | CR: FBSI | |
|---|---|---|---|---|---|---|
| D07<br>mm/min, rpm | Speed limit nx | | | MSD SLM FDD | 2/4 | |
| HW:P2 | 20.000000 | 0.000000 | 1000.000000 | FLOAT | Power On | |

| 1346 | SAFE_VELO_X | | | | | CR: / FBSI / | |
|---|---|---|---|---|---|---|---|
| D07 | Speed limit nx (not 810D) | | | FDD/MSD | ROT/LIN | 2/4 | 840D |
| mm/min, rev/min | 20.0000 | 0.0000 | 1000.0000 | FLOAT | | PowerOn | |

| 1348 | SAFE_STOP_VELO_TOL | | | | CR: FBSI | |
|---|---|---|---|---|---|---|
| D07<br>mm/min, rpm | Actual speed tolerance for SBR | | | MSD SLM FDD | 2/4 | |
| HW:P2 | 300.000000 | 0.000000 | 20000.000000 | FLOAT | Power On | |

| 1348 | SAFE_STOP_VELO_TOL | | | | | CR: / FBSI / | |
|---|---|---|---|---|---|---|---|
| D07 | Actual speed tolerance for SBR (not 810D) | | | FDD/MSD | ROT/LIN | 2/4 | 840D |
| mm/min, rev/min | 300.0000 | 0.0000 | 20000.0000 | FLOAT | | PowerOn | |

| 1349 | SAFE_SLIP_VELO_TOL | | | | CR: FBSI | |
|---|---|---|---|---|---|---|
| D07<br>mm/min, rpm | Tolerance 2 encoder drift/slip | | | MSD SLM FDD | 2/4 | |
| HW:P2 | 6.000000 | 0.000000 | 1000.000000 | FLOAT | Power On | |

| 1349 | SAFE_SLIP_VELO_TOL | | | | | CR: / FBSI / | |
|---|---|---|---|---|---|---|---|
| D07 | Tolerance 2 encoder drift/slip (not 810D) | | | FDD/MSD | ROT/LIN | 2/4 | 840D |
| mm/min, rev/min | 6.0000 | 0.0000 | 1000.0000 | FLOAT | | PowerOn | |

| 1350 | SAFE_MODE_SWITCH_TIME | | | | CR: FBSI | |
|---|---|---|---|---|---|---|
| D07<br>ms | Tolerance time for SGE changeover | | | MSD SLM FDD | 2/4 | |
| HW:P2 | 500.000000 | 0.000000 | 10000.000000 | FLOAT | Power On | |

| 1350 | SAFE_MODE_SWITCH_TIME | | | | | CR: / FBSI / | |
|---|---|---|---|---|---|---|---|
| D07 | Tolerance time for SGE changeover (not 810D) | | | FDD/MSD | ROT/LIN | 2/4 | 840D |
| ms | 500.0000 | 0.0000 | 10000.0000 | FLOAT | | PowerOn | |

| 1351 | SAFE_VELO_SWITCH_DELAY | | | | CR: FBSI | |
|---|---|---|---|---|---|---|
| D07<br>ms | Delay time for SG changeover | | | MSD SLM FDD | 2/4 | |
| HW:P2 | 100.000000 | 0.000000 | 60000.000000 | FLOAT | Power On | |

| 1351 | SAFE_VELO_SWITCH_DELAY | | | | | CR: / FBSI / | |
|---|---|---|---|---|---|---|---|
| D07 | Delay time for SG changeover (not 810D) | | | FDD/MSD | ROT/LIN | 2/4 | 840D |
| ms | 100.0000 | 0.0000 | 60000.0000 | FLOAT | | PowerOn | |

| 1352 | SAFE_STOP_SWITCH_TIME_C | | | | CR: FBSI | |
|---|---|---|---|---|---|---|
| D07<br>ms | Transition time from STOP C to SBH | | | MSD SLM FDD | 2/4 | |
| HW:P2 | 100.000000 | 0.000000 | 10000.000000 | FLOAT | Power On | |

| 1352 | SAFE_STOP_SWITCH_TIME_C | | | | | CR: / FBSI / | |
|---|---|---|---|---|---|---|---|
| D07 | Transition time from STOP C to SBH (not 810D) | | | FDD/MSD | ROT/LIN | 2/4 | 840D |
| ms | 100.0000 | 0.0000 | 10000.0000 | FLOAT | | PowerOn | |

© Siemens AG 2004 All Rights Reserved

| 1353 | SAFE_STOP_SWITCH_TIME_D | | | | | CR: FBSI | |
|---|---|---|---|---|---|---|---|
| D07<br>ms | Transition time from STOP D to SBH | | | MSD SLM FDD | | 2/4 | |
| HW:P2 | 100.000000 | 0.000000 | 60000.000000 | FLOAT | | Power On | |

| 1353 | SAFE_STOP_SWITCH_TIME_D | | | | | CR: / FBSI / | |
|---|---|---|---|---|---|---|---|
| D07 | Transition time from STOP D to SBH (not 810D) | | | FDD/MSD | ROT/LIN | 2/4 | 840D |
| ms | 100.0000 | 0.0000 | 60000.0000 | FLOAT | | PowerOn | |

| 1354 | SAFE_STOP_SWITCH_TIME_E | | | | | CR: FBSI | |
|---|---|---|---|---|---|---|---|
| D07<br>ms | Transition time from STOP E to SBH | | | MSD SLM FDD | | 2/4 | |
| HW:P2 | 100.000000 | 0.000000 | 60000.000000 | FLOAT | | Power On | |

| 1354 | SAFE_STOP_SWITCH_TIME_E | | | | | CR: / FBSI / | |
|---|---|---|---|---|---|---|---|
| D07 | Transition time from STOP E to SBH (not 810D) | | | FDD/MSD | ROT/LIN | 2/4 | 840D |
| ms | 100.0000 | 0.0000 | 60000.0000 | FLOAT | | PowerOn | |

| 1355 | SAFE_STOP_SWITCH_TIME_F | | | | | CR: FBSI | |
|---|---|---|---|---|---|---|---|
| D07<br>ms | Transition period from STOP F to STOP B | | | MSD SLM FDD | | 2/4 | |
| HW:P2 | 0.000000 | 0.000000 | 60000.000000 | FLOAT | | Power On | |

| 1355 | SAFE_STOP_SWITCH_TIME_F | | | | | CR: / FBSI / | |
|---|---|---|---|---|---|---|---|
| D07 | Transition time from STOP F to Stop B (not 810D) | | | FDD/MSD | ROT/LIN | 2/4 | 840D |
| ms | 0.0000 | 0.0000 | 60000.0000 | FLOAT | | PowerOn | |

| 1356 | SAFE_PULSE_DISABLE_DELAY | | | | | CR: FBSI | |
|---|---|---|---|---|---|---|---|
| D07<br>ms | Delay time for pulse suppression | | | MSD SLM FDD | | 2/4 | |
| HW:P2 | 100.000000 | 0.000000 | 10000.000000 | FLOAT | | Power On | |

| 1356 | SAFE_PULSE_DISABLE_DELAY | | | | | CR: / FBSI / | |
|---|---|---|---|---|---|---|---|
| D07 | Delay time for pulse suppression (not 810D) | | | FDD/MSD | ROT/LIN | 2/4 | 840D |
| ms | 100.0000 | 0.0000 | 10000.0000 | FLOAT | | PowerOn | |

| 1357 | SAFE_PULSE_DIS_CHECK_TIME | | | | | CR: FBSI | |
|---|---|---|---|---|---|---|---|
| D07<br>ms | Time for testing pulse suppression | | | MSD SLM FDD | | 2/4 | |
| HW:P2 | 100.000000 | 0.000000 | 10000.000000 | FLOAT | | Power On | |

| 1357 | SAFE_PULSE_DIS_CHECK_TIME | | | | | CR: / FBSI / | |
|---|---|---|---|---|---|---|---|
| D07 | Time for testing pulse suppression (not 810D) | | | FDD/MSD | ROT/LIN | 2/4 | 840D |
| ms | 100.0000 | 0.0000 | 10000.0000 | FLOAT | | PowerOn | |

| 1358 | SAFE_ACC_TEST_TIMEOUT | | | | | CR: FBSI | |
|---|---|---|---|---|---|---|---|
| D07<br>ms | SI acceptance test timer | | | MSD SLM FDD | | 2/4 | |
| HW:P2 | 40000.0 | 5000.0 | 100000.0 | FLOAT | | Power On | |

| 1358 | SAFE_ACC_TEST_TIMEOUT | | | | | CR: / FBSI / | |
|---|---|---|---|---|---|---|---|
| D07 | Acceptance test monitoring (not 810D) | | | FDD/MSD | ROT/LIN | 2/4 | 840D |
| ms | 40000.0000 | 5000.0000 | 100000.0000 | FLOAT | | PowerOn | |

| 1360 | SAFE_STANDSTILL_VELO_TOL | | | | | CR: FBSI | |
|---|---|---|---|---|---|---|---|
| D07<br>mm/min, rpm | Creep speed pulse suppression | | | MSD SLM FDD | | 2/4 | |
| HW:P2 | 0.000000 | 0.000000 | 1000.000000 | FLOAT | | Power On | |

© Siemens AG 2004 All Rights Reserved

| 1360 | SAFE_STANDSTILL_VELO_TOL | | | | | CR: / FBSI / | |
|---|---|---|---|---|---|---|---|
| D07 | Creep speed pulse suppression (not 810D) | | | FDD/MSD | ROT/LIN | 2/4 | 840D |
| mm/min, rev/min | 0.0000 | 0.0000 | 1000.0000 | FLOAT | | PowerOn | |

| 1361 | SAFE_VELO_STOP_MODE | | | | CR: FBSI | |
|---|---|---|---|---|---|---|
| D07<br>- | Stop reaction with SG | | | MSD SLM FDD | 2/4 | |
| HW:P2 | 5 | 0 | 15 | UNS.WORD | Power On | |

| 1361 | SAFE_VELO_STOP_MODE | | | | | CR: / FBSI / | |
|---|---|---|---|---|---|---|---|
| D07 | Stop reaction with SG (not 810D) | | | FDD/MSD | ROT/LIN | 2/4 | 840D |
| - | 5 | 0 | 14 | UNS. WORD | | PowerOn | |

| 1362 | SAFE_POS_STOP_MODE | | | | CR: FBSI | |
|---|---|---|---|---|---|---|
| D07<br>- | Stop reaction with SE | | | MSD SLM FDD | 2/4 | |
| HW:P2 | 2 | 2 | 4 | UNS.WORD | Power On | |

| 1362 | SAFE_POS_STOP_MODE | | | | | CR: / FBSI / | |
|---|---|---|---|---|---|---|---|
| D07 | Stop reaction with SE (not 810D) | | | FDD/MSD | ROT/LIN | 2/4 | 840D |
| - | 2 | 2 | 4 | UNS. WORD | | PowerOn | |

| 1363 | SAFE_VELO_STOP_REACTION | | | | CR: FBSI | |
|---|---|---|---|---|---|---|
| D07<br>- | Specific SG stop reaction | | | MSD SLM FDD | 2/4 | |
| HW:P2 | 2 | 0 | 14 | UNS.WORD | Power On | |

| 1363 | SAFE_VELO_STOP_REACTION [n] 0 ...3 Index of param.-set | | | | | CR: / FBSI / | |
|---|---|---|---|---|---|---|---|
| D07 | Specific SG stop reaction (not 810D) | | | FDD/MSD | ROT/LIN | 2/4 | 840D |
| - | 2 | 0 | 14 | UNS. WORD | | PowerOn | |

| 1370 | SAFE_TEST_MODE | | | | CR: FBSI | |
|---|---|---|---|---|---|---|
| D07<br>- | SI acceptance test mode | | | MSD SLM FDD | 2/4 | |
| HW:P2 | 0 | 0 | 0x00AC | UNS.WORD | Immediately | |

| 1370 | SAFE_TEST_MODE | | | | | CR: / FBSI / | |
|---|---|---|---|---|---|---|---|
| D07 | Acceptance test mode (not 810D) | | | FDD/MSD | ROT/LIN | 2/4 | 840D |
| - | 0 | 0 | ac | UNS. WORD | | immediately | |

| 1371 | SAFE_TEST_STATE | | | | CR: FBSI | |
|---|---|---|---|---|---|---|
| D07<br>- | SI acceptance test status | | | MSD SLM FDD | 2/4 | |
| HW:P2 | 0 | 0 | 0x00AC | UNS.WORD | Immediately | |

| 1371 | SAFE_TEST_STATE | | | | | CR: / FBSI / | |
|---|---|---|---|---|---|---|---|
| D07 | Acceptance test state (not 810D) | | | FDD/MSD | ROT/LIN | 2/4 | 840D |
| - | 0 | 0 | ac | UNS. WORD | | immediately | |

| 1380 | SAFE_PULSE_DIS_TIME_FAIL | | | | CR: FBSI | |
|---|---|---|---|---|---|---|
| D07<br>ms | Time until pulse suppression | | | MSD SLM FDD | 2/4 | |
| HW:P2 | 0.000000 | 0.000000 | 800.000000 | FLOAT | Power On | |

| 1380 | SAFE_PULSE_DIS_TIME_FAIL | | | | | CR: / FBSI / | |
|---|---|---|---|---|---|---|---|
| D07 | Time remaining until pulse suppression (not 810D) | | | FDD/MSD | ROT/LIN | 2/4 | 840D |
| ms | 0.0000 | 0.0000 | 800.0000 | FLOAT | | PowerOn | |

| 1390 | SAFE_FIRMWARE_VERSION | | | | CR: FBSI | |
|---|---|---|---|---|---|---|
| D07<br>- | Firmware | | | MSD SLM FDD | 2/4 | |
| HW:P2 | 0 | 0 | 4294967295 | UNS.DWORD | Immediately | |

© Siemens AG 2004 All Rights Reserved

| 1390 | SAFE_FIRMWARE_VERSION | | | | | CR: / FBSI / | |
|---|---|---|---|---|---|---|---|
| D07 | Firmware (not 810D) | | | FDD/MSD | ROT/LIN | 2/4 | 840D |
| - | 0 | 0 | 2147483647 | UNS. DWORD | | immediately | |

| 1391 | SAFE_DIAG_NC_RESULTLIST1 | | | | CR: FBSI |
|---|---|---|---|---|---|
| D07<br>- | Diagnostics: NC result list 1 | | | MSD SLM FDD | 2/4 |
| HW:P2 | 0 | 0 | 4294967295 | UNS.DWORD | Immediately |

| 1391 | SAFE_DIAG_NC_RESULTLIST1 | | | | | CR: / FBSI / | |
|---|---|---|---|---|---|---|---|
| D07 | Diagnostics: NC result list 1 (not 810D) | | | FDD/MSD | ROT/LIN | 2/4 | 840D |
| - | 0 | 0 | 2147483647 | UNS. DWORD | | immediately | |

| 1392 | SAFE_DIAG_611D_RESULTLIST1 | | | | CR: FBSI |
|---|---|---|---|---|---|
| D07<br>- | Diagnostics: 611D result list 1 | | | MSD SLM FDD | 2/4 |
| HW:P2 | 0 | 0 | 4294967295 | UNS.DWORD | Immediately |

| 1392 | SAFE_DIAG_611D_RESULTLIST1 | | | | | CR: / FBSI / | |
|---|---|---|---|---|---|---|---|
| D07 | Diagnostics: 611D result list 1 (not 810D) | | | FDD/MSD | ROT/LIN | 2/4 | 840D |
| - | 0 | 0 | 2147483647 | UNS. DWORD | | immediately | |

| 1393 | SAFE_DIAG_NC_RESULTLIST2 | | | | CR: FBSI |
|---|---|---|---|---|---|
| D07<br>- | Diagnostics: NC result list 2 | | | MSD SLM FDD | 2/4 |
| HW:P2 | 0 | 0 | 4294967295 | UNS.DWORD | Immediately |

| 1393 | SAFE_DIAG_NC_RESULTLIST2 | | | | | CR: / FBSI / | |
|---|---|---|---|---|---|---|---|
| D07 | Diagnostics: NC result list 2 (not 810D) | | | FDD/MSD | ROT/LIN | 2/4 | 840D |
| - | 0 | 0 | 2147483647 | UNS. DWORD | | immediately | |

| 1394 | SAFE_DIAG_611D_RESULTLIST2 | | | | CR: FBSI |
|---|---|---|---|---|---|
| D07<br>- | Diagnostics: 611D result list 2 | | | MSD SLM FDD | 2/4 |
| HW:P2 | 0 | 0 | 4294967295 | UNS.DWORD | Immediately |

| 1394 | SAFE_DIAG_611D_RESULTLIST2 | | | | | CR: / FBSI / | |
|---|---|---|---|---|---|---|---|
| D07 | Diagnostics: 611D result list 2 (not 810D) | | | FDD/MSD | ROT/LIN | 2/4 | 840D |
| - | 0 | 0 | 2147483647 | UNS. DWORD | | immediately | |

| 1395 | SAFE_STOP_F_DIAGNOSIS | | | | CR: FBSI |
|---|---|---|---|---|---|
| D07<br>- | Diagnostics for STOP F | | | MSD SLM FDD | 2/4 |
| HW:P2 | 32767 | 0 | 32767 | WORD | Immediately |

| 1395 | SAFE_STOP_F_DIAGNOSIS | | | | | CR: / FBSI / | |
|---|---|---|---|---|---|---|---|
| D07 | Diagnostics for STOP F (not 810D) | | | FDD/MSD | ROT/LIN | 2/4 | 840D |
| - | 32767 | 0 | 32767 | WORD | | immediately | |

| 1396 | SAFE_ACKN_WRITE | | | | CR: FBSI |
|---|---|---|---|---|---|
| D07<br>- | User agreement | | | MSD SLM FDD | 2/4 |
| HW:P2 | 0x0000 | 0x0000 | 0xffff | UNS.WORD | Immediately |

| 1396 | SAFE_ACKN_WRITE | | | | | CR: / FBSI / | |
|---|---|---|---|---|---|---|---|
| D07 | User agreement (not 810D) | | | FDD/MSD | ROT/LIN | 2/4 | 840D |
| - | 0 | 0 | ffff | UNS. WORD | | immediately | |

© Siemens AG 2004 All Rights Reserved

| 1397 | SAFE_ACKN_READ | | | | | CR: FBSI | |
|---|---|---|---|---|---|---|---|
| D07<br>- | 611D internal agreement | | | MSD SLM FDD | | 2/4 | |
| HW:P2 | 0x0000 | 0x0000 | 0xffff | UNS.WORD | | Immediately | |

| 1397 | SAFE_ACKN_READ | | | | | CR: / FBSI / | |
|---|---|---|---|---|---|---|---|
| D07 | 611D internal agreement (not 810D) | | | FDD/MSD | ROT/LIN | 2/4 | 840D |
| - | 0 | 0 | ffff | UNS. WORD | | immediately | |

| 1398 | SAFE_ACT_CHECKSUM | | | | | CR: FBSI | |
|---|---|---|---|---|---|---|---|
| D07<br>- | Display of SI-MD check sum | | | MSD SLM FDD | | 2/4 | |
| HW:P2 | 0 | 0 | 4294967295 | UNS.DWORD | | Immediately | |

| 1398 | SAFE_ACT_CHECKSUM | | | | | CR: / FBSI / | |
|---|---|---|---|---|---|---|---|
| D07 | Display of SI-MD check sum (not 810D) | | | FDD/MSD | ROT/LIN | 2/4 | 840D |
| - | 0 | 0 | 2147483647 | UNS. DWORD | | immediately | |

| 1399 | SAFE_DES_CHECKSUM | | | | | CR: FBSI | |
|---|---|---|---|---|---|---|---|
| D07<br>- | SI-MD check sum | | | MSD SLM FDD | | 2/4 | |
| HW:P2 | 0 | 0 | 4294967295 | UNS.DWORD | | Power On | |

| 1399 | SAFE_DES_CHECKSUM | | | | | CR: / FBSI / | |
|---|---|---|---|---|---|---|---|
| D07 | SI-MD check sum (not 810D) | | | FDD/MSD | ROT/LIN | 2/4 | 840D |
| - | 0 | 0 | 2147483647 | UNS. DWORD | | PowerOn | |

| 1400 | MOTOR_RATED_SPEED | | | | | CR: DM1, DL1 | |
|---|---|---|---|---|---|---|---|
| D05<br>ROT: 1/min<br>LIN: m/min | Rated motor speed | | | MSD SLM FDD | | 2/4 | |
| HW:P2 | 0.000000 | 0.000000 | 100000.000000 | FLOAT | | Power On | |

| 1400 | MOTOR_RATED_SPEED | | | | | CR: / DM1/ | |
|---|---|---|---|---|---|---|---|
| | Rated motor speed | | | FDD/MSD | | 2/4 | 810D |
| 1/min | 0.0000 | 0.0000 | 25000.0000 | FLOAT | | PowerOn | |

| 1400 | MOTOR_RATED_SPEED | | | | | CR: / DL1/ | |
|---|---|---|---|---|---|---|---|
| D05 | Rated motor speed | | | FDD | LIN | 2/4 | 840D |
| m/min | 0.0000 | 0.0000 | 100000.0000 | FLOAT | | PowerOn | |

| 1400 | MOTOR_RATED_SPEED | | | | | CR: /DM1 / | |
|---|---|---|---|---|---|---|---|
| D05 | Rated motor speed | | | FDD/MSD | ROT | 2/4 | 840D |
| 1/min | 0.0000<br>HSA: 1450.0000 | 0.0000 | 100000.0000 | FLOAT | | PowerOn | |

| 1401 | MOTOR_MAX_SPEED | | | | | CR: DD1, DL1 | |
|---|---|---|---|---|---|---|---|
| D02, D05<br>ROT: 1/min<br>LIN: m/min | Maximum usable motor speed | | | MSD SLM FDD | | 2/4 | |
| HW:P2 | 0.000000 | 0.000000 | 100000.000000 | FLOAT | | Power On | |

| 1401 | MOTOR_MAX_SPEED [n] 0 ...7 Index of param.-set | | | | | CR: / DD1/ | |
|---|---|---|---|---|---|---|---|
| | Maximum usable motor speed | | | FDD/MSD | | 2/4 | 810D |
| 1/min | 0.0000 | 0.0000 | 50000.0000 | FLOAT | | PowerOn | |

| 1401 | MOTOR_MAX_SPEED [n] 0 ...7 Index of param.-set | | | | | CR: /DD1 / | |
|---|---|---|---|---|---|---|---|
| D02, D05 | Maximum usable motor speed | | | FDD/MSD | ROT | 2/4 | 840D |
| 1/min | 0.0000 | 0.0000 | 100000.0000 | FLOAT | | PowerOn | |

© Siemens AG 2004 All Rights Reserved

| 1401 | **MOTOR_MAX_SPEED** [n] 0 ...7 Index of param.-set | | | | | CR: **/ DL1/** | |
|---|---|---|---|---|---|---|---|
| D02, D05 | Maximum motor operating speed | | | FDD | LIN | 2/4 | **840D** |
| m/min | 0.0000 | 0.0000 | 100000.0000 | FLOAT | | PowerOn | |

| 1403 | **PULSE_SUPPRESSION_SPEED** | | | | CR: **DB1, DL1** |
|---|---|---|---|---|---|
| D02<br>ROT: 1/min<br>LIN: m/min | Shut down speed pulse suppression | | | MSD SLM FDD | 2/4 |
| HW:P2 | 0.000000 | 0.000000 | 7200.000000 | FLOAT | Immediately |

| 1403 | **PULSE_SUPPRESSION_SPEED** | | | | | CR: **/DB1 /** | |
|---|---|---|---|---|---|---|---|
| D02 | Shut down speed pulse suppression | | | FDD/MSD | ROT | 2/4 | |
| 1/min | 0.0000<br>HSA: 2.0000 | 0.0000 | 7200.0000 | FLOAT | | immediately | |

| 1403 | **PULSE_SUPPRESSION_SPEED** | | | | | CR: **/ DL1/** | |
|---|---|---|---|---|---|---|---|
| D02 | Switch-off speed for cancelling of pulses | | | FDD | LIN | 2/4 | |
| m/min | 0.0000 | 0.0000 | 7200.0000 | FLOAT | | immediately | |

| 1404 | **PULSE_SUPPRESSION_DELAY** | | | | CR: **DB1** |
|---|---|---|---|---|---|
| D02<br>ms | Timer impulse suppression | | | MSD SLM FDD | 2/4 |
| HW:P2 | 100.000000 | 0.000000 | 100000.000000 | FLOAT | Immediately |

| 1404 | **PULSE_SUPPRESSION_DELAY** | | | | | CR: **/ DB1 /** | |
|---|---|---|---|---|---|---|---|
| D02 | Timer impulse suppression | | | FDD/MSD | ROT/LIN | 2/4 | |
| ms | 100.0000<br>HSA: 5000.0000 | 0.0000 | 100000.0000 | FLOAT | | immediately | |

| 1405 | **MOTOR_SPEED_LIMIT** | | | | CR: **DÜ1, DL1** |
|---|---|---|---|---|---|
| D02, D05<br>% | Monitoring motor speed | | | MSD SLM FDD | 2/4 |
| HW:P2 | 110.000000 | 100.000000 | 110.000000 | FLOAT | Immediately |

| 1405 | **MOTOR_SPEED_LIMIT** [n] 0 ...7 Index of param.-set | | | | | CR: **/DÜ1 /** | |
|---|---|---|---|---|---|---|---|
| D02, D05 | Monitoring motor speed | | | FDD/MSD | ROT | 2/4 | |
| % | 110.0000 | 100.0000 | 110.0000 | FLOAT | | immediately | |

| 1405 | **MOTOR_SPEED_LIMIT** [n] 0 ...7 Index of param.-set | | | | | CR: **/ DL1/** | |
|---|---|---|---|---|---|---|---|
| D02, D05 | Monitoring speed of motor | | | FDD | LIN | 2/4 | |
| % | 110.0000 | 100.0000 | 110.0000 | FLOAT | | immediately | |

| 1406 | **SPEEDCTRL_TYPE** | | | | CR: **DD2** |
|---|---|---|---|---|---|
| EXP<br>- | Speed controller type | | | MSD SLM FDD | 0/0 |
| HW:P2 | 1 | 1 | 1 | UNS.WORD | Power On |

| 1406 | **SPEEDCTRL_TYPE** | | | | | CR: **/ DD2 /** | |
|---|---|---|---|---|---|---|---|
| EXP | Speed controller type (not 810D) | | | FDD/MSD | ROT/LIN | 0/0 | **840D** |
| - | 1 | 1 | 1 | UNS. WORD | | PowerOn | |

| 1407 | **SPEEDCTRL_GAIN_1** | | | | CR: **DD2, DL1** |
|---|---|---|---|---|---|
| D01, D08<br>ROT: Nms/rad<br>LIN: Ns/m | P gain of speed controller | | | MSD SLM FDD | 2/4 |
| HW:P2 | ROT: 0.300000<br>LIN: 2000.000000 | 0.000000 | 1000000.00000<br>0 | FLOAT | Immediately |

| 1407 | **SPEEDCTRL_GAIN_1** [n] 0 ...7 Index of param.-set | | | | | CR: **/ DD2/** | |
|---|---|---|---|---|---|---|---|
| | P gain of speed controller | | | FDD/MSD | | 2/4 | **810D** |
| Nms/rad | 0.3000 | 0.0000 | 100000.0000 | FLOAT | | immediately | |

© Siemens AG 2004 All Rights Reserved

| 1407 | **SPEEDCTRL_GAIN_1** [n] 0 ...7 Index of param.-set | | | | | CR: / **DL1/** | |
|---|---|---|---|---|---|---|---|
| D01, D08 | P gain speed control | | | FDD | LIN | 2/4 | **840D** |
| Ns/m | 2000.0000 | 0.0000 | 1000000.0000 | FLOAT | | immediately | |

| 1407 | **SPEEDCTRL_GAIN_1** [n] 0 ...7 Index of param.-set | | | | | CR: **/DD2 /** | |
|---|---|---|---|---|---|---|---|
| D01, D08 | P gain of speed controller | | | FDD/MSD | ROT | 2/4 | **840D** |
| Nms/rad | 0.3000 | 0.0000 | 1000000.0000 | FLOAT | | immediately | |

| 1408 | **SPEEDCTRL_GAIN_2** | | | | CR: **DD2, DL1** | |
|---|---|---|---|---|---|---|
| D01, EXP<br>ROT: Nms/rad<br>LIN: Ns/m | P gain of upper adaptation speed | | | MSD SLM FDD | 2/4 | |
| HW:P2 | ROT: 0.300000<br>LIN: 2000.000000 | 0.000000 | 1000000.000000 | FLOAT | Immediately | |

| 1408 | **SPEEDCTRL_GAIN_2** [n] 0 ...7 Index of param.-set | | | | | CR: / **DD2/** | |
|---|---|---|---|---|---|---|---|
| | P gain of upper adaptation speed | | | FDD/MSD | | 2/4 | **810D** |
| Nms/rad | 0.3000 | 0.0000 | 100000.0000 | FLOAT | | immediately | |

| 1408 | **SPEEDCTRL_GAIN_2** [n] 0 ...7 Index of param.-set | | | | | CR: / **DL1/** | |
|---|---|---|---|---|---|---|---|
| D01, EXP | P gain upper adaption speed | | | FDD | LIN | 2/4 | **840D** |
| Ns/m | 2000.0000 | 0.0000 | 1000000.0000 | FLOAT | | immediately | |

| 1408 | **SPEEDCTRL_GAIN_2** [n] 0 ...7 Index of param.-set | | | | | CR: **/DD2 /** | |
|---|---|---|---|---|---|---|---|
| D01, EXP | P gain of upper adaptation speed | | | FDD/MSD | ROT | 2/4 | **840D** |
| Nms/rad | 0.3000 | 0.0000 | 1000000.0000 | FLOAT | | immediately | |

| 1409 | **SPEEDCTRL_INTEGRATOR_TIME_1** | | | | CR: **DD2, DL1** | |
|---|---|---|---|---|---|---|
| D01, D08<br>ms | Integral action time of speed controller | | | MSD SLM FDD | 2/4 | |
| HW:P2 | 10.000000 | 0.000000 | 500.000000 | FLOAT | Immediately | |

| 1409 | **SPEEDCTRL_INTEGRATOR_TIME_1** [n] 0 ...7 Index of param.-set | | | | | CR: **/DD2 /** | |
|---|---|---|---|---|---|---|---|
| D01, D08 | Integral action time of speed controller | | | FDD/MSD | ROT | 2/4 | |
| ms | 10.0000 | 0.0000 | 500.0000 | FLOAT | | immediately | |

| 1409 | **SPEEDCTRL_INTEGRATOR_TIME_1** [n] 0 ...7 Index of param.-set | | | | | CR: / **DL1/** | |
|---|---|---|---|---|---|---|---|
| D01, D08 | Integral action time of speed controller | | | FDD | LIN | 2/4 | |
| ms | 10.0000 | 0.0000 | 500.0000 | FLOAT | | immediately | |

| 1410 | **SPEEDCTRL_INTEGRATOR_TIME_2** | | | | CR: **DD2, DL1** | |
|---|---|---|---|---|---|---|
| D01, EXP<br>ms | Integral action time of upper adaptation speed | | | MSD SLM FDD | 2/4 | |
| HW:P2 | 10.000000 | 0.000000 | 500.000000 | FLOAT | Immediately | |

| 1410 | **SPEEDCTRL_INTEGRATOR_TIME_2** [n] 0 ...7 Index of param.-set | | | | | CR: **/DD2 /** | |
|---|---|---|---|---|---|---|---|
| D01, EXP | Integral action time of upper adaptation speed | | | FDD/MSD | ROT | 2/4 | |
| ms | 10.0000 | 0.0000 | 500.0000 | FLOAT | | immediately | |

| 1410 | **SPEEDCTRL_INTEGRATOR_TIME_2** [n] 0 ...7 Index of param.-set | | | | | CR: / **DL1/** | |
|---|---|---|---|---|---|---|---|
| D01, EXP | Integral action time of upper adaption speed | | | FDD | LIN | 2/4 | |
| ms | 10.0000 | 0.0000 | 500.0000 | FLOAT | | immediately | |

| 1411 | **SPEEDCTRL_ADAPT_SPEED_1** | | | | CR: **DD2, DL1** | |
|---|---|---|---|---|---|---|
| D01, EXP<br>ROT: 1/min<br>LIN: m/min | Lower adaptation speed | | | MSD SLM FDD | 2/4 | |
| HW:P2 | 0.000000 | 0.000000 | 100000.000000 | FLOAT | Immediately | |

| 1411 | **SPEEDCTRL_ADAPT_SPEED_1** | | | | | CR: / **DD2/** | |
|---|---|---|---|---|---|---|---|
| | Lower adaptation speed | | | FDD/MSD | | 2/4 | **810D** |
| 1/min | 0.0000 | 0.0000 | 50000.0000 | FLOAT | | immediately | |

© Siemens AG 2004 All Rights Reserved

| 1411 | SPEEDCTRL_ADAPT_SPEED_1 | | | | | CR: /DD2 / | |
|---|---|---|---|---|---|---|---|
| D01, EXP | Lower adaptation speed | | | FDD/MSD | ROT | 2/4 | 840D |
| 1/min | 0.0000 | 0.0000 | 100000.0000 | FLOAT | | immediately | |

| 1411 | SPEEDCTRL_ADAPT_SPEED_1 | | | | | CR: / DL1/ | |
|---|---|---|---|---|---|---|---|
| D01, EXP | Lower adaption speed threshold | | | FDD | LIN | 2/4 | 840D |
| m/min | 0.0000 | 0.0000 | 100000.0000 | FLOAT | | immediately | |

| 1412 | SPEEDCTRL_ADAPT_SPEED_2 | | | | CR: DD2, DL1 | |
|---|---|---|---|---|---|---|
| D01, EXP<br>ROT: 1/min<br>LIN: m/min | Upper adaptation speed | | | MSD SLM FDD | 2/4 | |
| HW:P2 | 0.000000 | 0.000000 | 100000.000000 | FLOAT | Immediately | |

| 1412 | SPEEDCTRL_ADAPT_SPEED_2 | | | | | CR: / DD2/ | |
|---|---|---|---|---|---|---|---|
| | Upper adaptation speed | | | FDD/MSD | | 2/4 | 810D |
| 1/min | 0.0000 | 0.0000 | 50000.0000 | FLOAT | | immediately | |

| 1412 | SPEEDCTRL_ADAPT_SPEED_2 | | | | | CR: / DL1/ | |
|---|---|---|---|---|---|---|---|
| D01, EXP | Upper adaption speed threshold | | | FDD | LIN | 2/4 | 840D |
| m/min | 0.0000 | 0.0000 | 100000.0000 | FLOAT | | immediately | |

| 1412 | SPEEDCTRL_ADAPT_SPEED_2 | | | | | CR: /DD2 / | |
|---|---|---|---|---|---|---|---|
| D01, EXP | Upper adaptation speed | | | FDD/MSD | ROT | 2/4 | 840D |
| 1/min | 0.0000 | 0.0000 | 100000.0000 | FLOAT | | immediately | |

| 1413 | SPEEDCTRL_ADAPT_ENABLE | | | | CR: DD2, DL1 | |
|---|---|---|---|---|---|---|
| D01, EXP<br>- | Select adaptation speed controller | | | MSD SLM FDD | 2/4 | |
| HW:P2 | 0 | 0 | 1 | UNS.WORD | Immediately | |

| 1413 | SPEEDCTRL_ADAPT_ENABLE | | | | | CR: /DD2 / | |
|---|---|---|---|---|---|---|---|
| D01, EXP | Select adaptation speed controller | | | FDD/MSD | ROT | 2/4 | |
| - | 0 | 0 | 1 | UNS. WORD | | immediately | |

| 1413 | SPEEDCTRL_ADAPT_ENABLE | | | | | CR: / DL1/ | |
|---|---|---|---|---|---|---|---|
| D01, EXP | Select adaptation speed controller | | | FDD | LIN | 2/4 | |
| - | 0 | 0 | 1 | UNS. WORD | | immediately | |

| 1414 | SPEEDCTRL_REF_MODEL_FREQ | | | | CR: DD2, DL1 | |
|---|---|---|---|---|---|---|
| D01, EXP<br>Hz | Natural frequency for the reference model speed | | | MSD SLM FDD | 2/4 | |
| HW:P2 | 0.000000 | 0.000000 | 8000.000000 | FLOAT | Immediately | |

| 1414 | SPEEDCTRL_REF_MODEL_FREQ [n] 0 ...7 Index of param.-set | | | | | CR: /DD2 / | |
|---|---|---|---|---|---|---|---|
| D01, EXP | Natural frequency for the reference model speed (not 810D) | | | FDD/MSD | ROT | 2/4 | 840D |
| Hz | 0.0000 | 0.0000 | 8000.0000 | FLOAT | | immediately | |

| 1414 | SPEEDCTRL_REF_MODEL_FREQ [n] 0 ...7 Index of param.-set | | | | | CR: / DL1/ | |
|---|---|---|---|---|---|---|---|
| D01, EXP | Natural frequency for the reference model speed (not 810D) | | | FDD | LIN | 2/4 | 840D |
| Hz | 0.0000 | 0.0000 | 8000.0000 | FLOAT | | immediately | |

| 1415 | SPEEDCTRL_REF_MODEL_DAMPING | | | | CR: DD2, DL1 | |
|---|---|---|---|---|---|---|
| D01, EXP<br>- | Damping of reference model speed | | | MSD SLM FDD | 2/4 | |
| HW:P2 | 1.000000 | 0.500000 | 5.000000 | FLOAT | Immediately | |

© Siemens AG 2004 All Rights Reserved

| 1415 | **SPEEDCTRL_REF_MODEL_DAMPING** [n] 0 ...7 Index of param.-set | | | | | CR: **/DD2 /** | |
|---|---|---|---|---|---|---|---|
| D01, EXP | Damping of reference model speed (not 810D) | | | FDD/MSD | ROT | 2/4 | **840D** |
| - | 1.0000 | 0.5000 | 5.0000 | FLOAT | | immediately | |

| 1415 | **SPEEDCTRL_REF_MODEL_DAMPING** [n] 0 ...7 Index of param.-set | | | | | CR: **/ DL1/** | |
|---|---|---|---|---|---|---|---|
| D01, EXP | Damping of reference model speed (not 810D) | | | FDD | LIN | 2/4 | **840D** |
| - | 1.0000 | 0.5000 | 5.0000 | FLOAT | | immediately | |

| 1416 | **SPEEDCTRL_REF_MODEL_DELAY** | | | | CR: **DD2, DL1** | |
|---|---|---|---|---|---|---|
| D01, EXP<br>- | Balancing the reference model speed | | | MSD SLM FDD | 2/4 | |
| HW:P2 | 0.000000 | 0.000000 | 1.000000 | FLOAT | Immediately | |

| 1416 | **SPEEDCTRL_REF_MODEL_DELAY** | | | | | CR: **/ DL1/** | |
|---|---|---|---|---|---|---|---|
| D01, EXP | Balancing the reference model speed (not 810D) | | | FDD | LIN | 2/4 | **840D** |
| - | 0.0000 | 0.0000 | 1.0000 | FLOAT | | immediately | |

| 1416 | **SPEEDCTRL_REF_MODEL_DELAY** | | | | | CR: **/DD2 /** | |
|---|---|---|---|---|---|---|---|
| D01, EXP | Balancing the reference model speed (not 810D) | | | FDD/MSD | ROT | 2/4 | **840D** |
| - | 0.0000 | 0.0000 | 1.0000 | FLOAT | | immediately | |

| 1417 | **SPEED_THRESHOLD_X** | | | | CR: **DB1, DL1** | |
|---|---|---|---|---|---|---|
| D03<br>ROT: 1/min<br>LIN: m/min | Signal n_x for 'n_act < n_x' | | | MSD SLM FDD | 2/4 | |
| HW:P2 | ROT: 6000.000000<br>LIN: 120.000000 | 0.000000 | 100000.000000 | FLOAT | Immediately | |

| 1417 | **SPEED_THRESHOLD_X** [n] 0 ...7 Index of param.-set | | | | | CR: **/ DB1/** | |
|---|---|---|---|---|---|---|---|
| | Signal n_x for 'n_act < n_x' | | | FDD/MSD | | 2/4 | **810D** |
| 1/min | 6000.0000 | 0.0000 | 50000.0000 | FLOAT | | immediately | |

| 1417 | **SPEED_THRESHOLD_X** [n] 0 ...7 Index of param.-set | | | | | CR: **/DB1 /** | |
|---|---|---|---|---|---|---|---|
| D03 | Signal n_x for 'n_act < n_x' | | | FDD/MSD | ROT | 2/4 | **840D** |
| 1/min | 6000.0000 | 0.0000 | 100000.0000 | FLOAT | | immediately | |

| 1417 | **SPEED_THRESHOLD_X** [n] 0 ...7 Index of param.-set | | | | | CR: **/ DL1/** | |
|---|---|---|---|---|---|---|---|
| D03 | v_x for "v_act < v_x" signal | | | FDD | LIN | 2/4 | **840D** |
| m/min | 120.0000 | 0.0000 | 100000.0000 | FLOAT | | immediately | |

| 1418 | **SPEED_THRESHOLD_MIN** | | | | CR: **DB1, DL1** | |
|---|---|---|---|---|---|---|
| D03<br>ROT: 1/min<br>LIN: m/min | Signal n_min for 'act_n < n_min' | | | MSD SLM FDD | 2/4 | |
| HW:P2 | ROT: 5.000000<br>LIN: 0.300000 | 0.000000 | 100000.000000 | FLOAT | Immediately | |

| 1418 | **SPEED_THRESHOLD_MIN** [n] 0 ...7 Index of param.-set | | | | | CR: **/ DB1/** | |
|---|---|---|---|---|---|---|---|
| | Signal n_min for 'act_n < n_min' | | | FDD/MSD | | 2/4 | **810D** |
| 1/min | 5.0000 | 0.0000 | 25000.0000 | FLOAT | | immediately | |

| 1418 | **SPEED_THRESHOLD_MIN** [n] 0 ...7 Index of param.-set | | | | | CR: **/DB1 /** | |
|---|---|---|---|---|---|---|---|
| D03 | Signal n_min for 'act_n < n_min' | | | FDD/MSD | ROT | 2/4 | **840D** |
| 1/min | 5.0000 | 0.0000 | 100000.0000 | FLOAT | | immediately | |

| 1418 | **SPEED_THRESHOLD_MIN** [n] 0 ...7 Index of param.-set | | | | | CR: **/ DL1/** | |
|---|---|---|---|---|---|---|---|
| D03 | v_min for "v_act < v_min" signal | | | FDD | LIN | 2/4 | **840D** |
| m/min | 0.3000 | 0.0000 | 100000.0000 | FLOAT | | immediately | |

© Siemens AG 2004 All Rights Reserved

| 1420 | **MOTOR_MAX_SPEED_SETUP** | | | | | CR: **DÜ1, DL1** | |
|---|---|---|---|---|---|---|---|
| D02<br>ROT: 1/min<br>LIN: m/min | Max. motor speed, setting-up operation | | | MSD SLM FDD | | 2/4 | |
| HW:P2 | ROT: 30.000000<br>LIN: 2.000000 | 0.000000 | 100000.000000 | FLOAT | | Immediately | |

| 1420 | **MOTOR_MAX_SPEED_SETUP** | | | | | CR: **/ DÜ1/** | |
|---|---|---|---|---|---|---|---|
| | Max. motor speed, setting-up operation | | | FDD/MSD | | 2/4 | **810D** |
| 1/min | 30.0000 | 0.0000 | 50000.0000 | FLOAT | | immediately | |

| 1420 | **MOTOR_MAX_SPEED_SETUP** | | | | | CR: **/DÜ1 /** | |
|---|---|---|---|---|---|---|---|
| D02 | Max. motor speed, setting-up operation | | | FDD/MSD | ROT | 2/4 | **840D** |
| 1/min | 30.0000 | 0.0000 | 100000.0000 | FLOAT | | immediately | |

| 1420 | **MOTOR_MAX_SPEED_SETUP** | | | | | CR: **/ DL1/** | |
|---|---|---|---|---|---|---|---|
| D02 | Maximum speed in setting-up operation | | | FDD | LIN | 2/4 | **840D** |
| m/min | 2.0000 | 0.0000 | 100000.0000 | FLOAT | | immediately | |

| 1421 | **SPEEDCTRL_INTEGRATOR_FEEDBK** | | | | CR: **DD1** | |
|---|---|---|---|---|---|---|
| D01<br>ms | Time constant integrator feedback | | | MSD SLM FDD | 2/4 | |
| HW:P2 | 0.000000 | 0.000000 | 1000.000000 | FLOAT | Immediately | |

| 1421 | **SPEEDCTRL_INTEGRATOR_FEEDBK** [n] 0 ...7 Index of param.-set | | | | | CR: **/ DD1 /** | |
|---|---|---|---|---|---|---|---|
| D01 | Time constant integrator feedback | | | FDD/MSD | ROT/LIN | 2/4 | |
| ms | 0.0000 | 0.0000 | 1000.0000 | FLOAT | | immediately | |

| 1424 | **SPEED_FFW_FILTER_TIME** | | | | CR: **DS1, DL1** | |
|---|---|---|---|---|---|---|
| D01, EXP<br>µs | Balancing the speed precontrol channel | | | MSD SLM FDD | 2/4 | |
| HW:P2 | 0.000000 | 0.000000 | 50000.000000 | FLOAT | Immediately | |

| 1424 | **SPEED_FFW_FILTER_TIME** | | | | | CR: **/ DL1/** | |
|---|---|---|---|---|---|---|---|
| D01, EXP | Balancing the speed precontrol channel (not 810D) | | | FDD | LIN | 2/4 | **840D** |
| us | 0.0000 | 0.0000 | 50000.0000 | FLOAT | | immediately | |

| 1424 | **SPEED_FFW_FILTER_TIME** | | | | | CR: **/DS1 /** | |
|---|---|---|---|---|---|---|---|
| D01, EXP | Balancing the speed precontrol channel (not 810D) | | | FDD/MSD | ROT | 2/4 | **840D** |
| us | 0.0000 | 0.0000 | 50000.0000 | FLOAT | | immediately | |

| 1425 | **SPEED_FFW_DELAY** | | | | CR: **DS1** | |
|---|---|---|---|---|---|---|
| D01, EXP<br>- | Balancing computation deadtime I-controller | | | MSD SLM FDD | 2/4 | |
| HW:P2 | 0.000000 | 0.000000 | 1.000000 | FLOAT | Immediately | |

| 1425 | **SPEED_FFW_DELAY** | | | | | CR: **/ DS1 /** | |
|---|---|---|---|---|---|---|---|
| D01, EXP | Balancing computation deadtime I-controller (not 810D) | | | FDD/MSD | ROT/LIN | 2/4 | **840D** |
| - | 0.0000 | 0.0000 | 1.0000 | FLOAT | | immediately | |

| 1426 | **SPEED_DES_EQ_ACT_TOL** | | | | CR: **DB1, DL1** | |
|---|---|---|---|---|---|---|
| D03<br>ROT: 1/min<br>LIN: m/min | Tolerance bandwidth for 'n_set = n_act' signal | | | MSD SLM FDD | 2/4 | |
| HW:P2 | ROT: 20.000000<br>LIN: 1.000000 | 0.000000 | 10000.000000 | FLOAT | Immediately | |

| 1426 | **SPEED_DES_EQ_ACT_TOL** [n] 0 ...7 Index of param.-set | | | | | CR: **/ DB1/** | |
|---|---|---|---|---|---|---|---|
| | Tolerance bandwidth for 'n_set = n_act' signal | | | FDD/MSD | | 2/4 | **810D** |
| 1/min | 20.0000 | 0.0000 | 10000.0000 | FLOAT | | immediately | |

© Siemens AG 2004 All Rights Reserved

| 1426 | **SPEED_DES_EQ_ACT_TOL** [n] 0 ...7 Index of param.-set | | | | | CR: **/ DL1/** | |
|---|---|---|---|---|---|---|---|
| D03 | Tolerance bandwidth for "v_set = v_act" signal | | | FDD | LIN | 2/4 | **840D** |
| m/min | 1.0000 | 0.0000 | 10000.0000 | FLOAT | | immediately | |

| 1426 | **SPEED_DES_EQ_ACT_TOL** [n] 0 ...7 Index of param.-set | | | | | CR: **/DB1 /** | |
|---|---|---|---|---|---|---|---|
| D03 | Tolerance bandwidth for 'n_set = n_act' signal | | | FDD/MSD | ROT | 2/4 | **840D** |
| 1/min | 20.0000 | 0.0000 | 10000.0000 | FLOAT | | immediately | |

| 1427 | **SPEED_DES_EQ_ACT_DELAY** | | | | CR: **DB1, DL1** | |
|---|---|---|---|---|---|---|
| D03<br>ms | Delay time signal 'n_set = n_act' | | | MSD SLM FDD | 2/4 | |
| HW:P2 | 200.000000 | 0.000000 | 500.000000 | FLOAT | Immediately | |

| 1427 | **SPEED_DES_EQ_ACT_DELAY** | | | | | CR: **/ DL1/** | |
|---|---|---|---|---|---|---|---|
| D03 | Delay time signal 'n_set = n_act' | | | FDD | LIN | 2/4 | |
| ms | 200.0000 | 0.0000 | 500.0000 | FLOAT | | immediately | |

| 1427 | **SPEED_DES_EQ_ACT_DELAY** | | | | | CR: **/DB1 /** | |
|---|---|---|---|---|---|---|---|
| D03 | Delay time signal 'n_set = n_act' | | | FDD/MSD | ROT | 2/4 | |
| ms | 200.0000 | 0.0000 | 500.0000 | FLOAT | | immediately | |

| 1428 | **ROT: TORQUE_THRESHOLD_X**<br>**LIN: FORCE_THRESHOLD_X** | | | | CR: **DB1, DL1** | |
|---|---|---|---|---|---|---|
| D03<br>% | ROT: Threshold force M_dx<br>LIN: Threshold force Fdx | | | MSD SLM FDD | 2/4 | |
| HW:P2 | 90.000000 | 0.000000 | 100.000000 | FLOAT | Immediately | |

| 1428 | **TORQUE_THRESHOLD_X** [n] 0 ...7 Index of param.-set | | | | | CR: **/DB1 /** | |
|---|---|---|---|---|---|---|---|
| D03 | Threshold force M_dx | | | FDD/MSD | ROT | 2/4 | |
| % | 90.0000 | 0.0000 | 100.0000 | FLOAT | | immediately | |

| 1428 | **FORCE_THRESHOLD_X** [n] 0 ...7 Index of param.-set | | | | | CR: **/ DL1/** | |
|---|---|---|---|---|---|---|---|
| D03 | Threshold force Fdx | | | FDD | LIN | 2/4 | |
| % | 90.0000 | 0.0000 | 100.0000 | FLOAT | | immediately | |

| 1429 | **TORQUE_THRESHOLD_X_DELAY** | | | | CR: **DB1, DL1** | |
|---|---|---|---|---|---|---|
| D03<br>ms | Delay time signal 'Md < Mdx' | | | MSD SLM FDD | 2/4 | |
| HW:P2 | 800.000000 | 0.000000 | 1000.000000 | FLOAT | Immediately | |

| 1429 | **TORQUE_THRESHOLD_X_DELAY** | | | | | CR: **/DB1 /** | |
|---|---|---|---|---|---|---|---|
| D03 | Delay time signal 'Md < Mdx' | | | FDD/MSD | ROT | 2/4 | |
| ms | 800.0000 | 0.0000 | 1000.0000 | FLOAT | | immediately | |

| 1429 | **TORQUE_THRESHOLD_X_DELAY** | | | | | CR: **/ DL1/** | |
|---|---|---|---|---|---|---|---|
| D03 | Delay time 'Fd < Fdx' signal | | | FDD | LIN | 2/4 | |
| ms | 800.0000 | 0.0000 | 1000.0000 | FLOAT | | immediately | |

| 1451 | **SPEEDCTRL_GAIN_1_AM** | | | | CR: **DE1** | |
|---|---|---|---|---|---|---|
| D01<br>Nms/rad | P gain of speed control loop IM | | | MSD SLM FDD | 2/4 | |
| HW:P2 | 0.300000 | 0.000000 | 100000.000000 | FLOAT | Immediately | |

| 1451 | **SPEEDCTRL_GAIN_1_AM** [n] 0 ...7 Index of param.-set | | | | | CR: **/DE1 /** | |
|---|---|---|---|---|---|---|---|
| D01 | P gain of speed control loop IM (not 810D) | | | MSD | ROT | 2/4 | **840D** |
| Nms/rad | 0.3000 | 0.0000 | 100000.0000 | FLOAT | | immediately | |

| 1453 | **SPDCTRL_INTEGR_TIME_1_AM** | | | | CR: **DE1** | |
|---|---|---|---|---|---|---|
| D01<br>ms | Integral action time of speed control loop IM | | | MSD SLM FDD | 2/4 | |
| HW:P2 | 140.000000 | 0.000000 | 6000.000000 | FLOAT | Immediately | |

© Siemens AG 2004 All Rights Reserved

| 1453 | **SPDCTRL_INTEGR_TIME_1_AM** [n] 0 ...7 Index of param.-set | | | | | CR: **/DE1 /** | |
|---|---|---|---|---|---|---|---|
| D01 | Integral action time of speed control loop IM (not 810D) | | | MSD | ROT | 2/4 | **840D** |
| ms | 140.0000 | 0.0000 | 6000.0000 | FLOAT | | immediately | |

| 1458 | **DES_CURRENT_OPEN_LOOP_AM** | | | | CR: **DE1** | |
|---|---|---|---|---|---|---|
| D01<br>% | Current setpoint controlled range IM | | | MSD SLM FDD | 2/4 | |
| HW:P2 | 90.000000 | 0.000000 | 150.000000 | FLOAT | Immediately | |

| 1458 | **DES_CURRENT_OPEN_LOOP_AM** | | | | | CR: **/DE1 /** | |
|---|---|---|---|---|---|---|---|
| D01 | Current setpoint controlled range IM (not 810D) | | | MSD | ROT | 2/4 | **840D** |
| % | 90.0000 | 0.0000 | 150.0000 | FLOAT | | immediately | |

| 1459 | **TORQUE_SMOOTH_TIME_AM** | | | | CR: **DE1** | |
|---|---|---|---|---|---|---|
| D01<br>ms | Torque smoothing time constant IM | | | MSD SLM FDD | 2/4 | |
| HW:P2 | 4.000000 | 0.000000 | 100.000000 | FLOAT | Immediately | |

| 1459 | **TORQUE_SMOOTH_TIME_AM** | | | | | CR: **/DE1 /** | |
|---|---|---|---|---|---|---|---|
| D01 | Torque smoothing time constant IM (not 810D) | | | MSD | ROT | 2/4 | **840D** |
| ms | 4.0000 | 0.0000 | 100.0000 | FLOAT | | immediately | |

| 1465 | **SWITCH_SPEED_MSD_AM** | | | | CR: **DE1** | |
|---|---|---|---|---|---|---|
| D01, D05, EXP<br>1/min | Changeover speed MSD/IM | | | MSD SLM FDD | 2/4 | |
| HW:P2 | 100000.000000 | 0.000000 | 100000.000000 | FLOAT | Immediately | |

| 1465 | **SWITCH_SPEED_MSD_AM** | | | | | CR: **/DE1 /** | |
|---|---|---|---|---|---|---|---|
| D01, D06 | Changeover speed MSD/IM (not 810D) | | | MSD | ROT | 2/4 | **840D** |
| 1/min | 100000.0000 | 0.0000 | 100000.0000 | FLOAT | | immediately | |

| 1466 | **SWITCH_SPD_OPEN_LOOP_AM** | | | | CR: **DE1** | |
|---|---|---|---|---|---|---|
| D01<br>1/min | Changeover speed closed/open loop IM | | | MSD SLM FDD | 2/4 | |
| HW:P2 | 300.000000 | 150.000000 | 100000.000000 | FLOAT | Immediately | |

| 1466 | **SWITCH_SPD_OPEN_LOOP_AM** | | | | | CR: **/DE1 /** | |
|---|---|---|---|---|---|---|---|
| D01 | Changeover speed closed/open loop IM (not 810D) | | | MSD | ROT | 2/4 | **840D** |
| 1/min | 300.0000 | 150.0000 | 100000.0000 | FLOAT | | immediately | |

| 1500 | **NUM_SPEED_FILTERS** | | | | CR: **DD2, DL1** | |
|---|---|---|---|---|---|---|
| D01<br>- | Number of speed setpoint filters | | | MSD SLM FDD | 2/4 | |
| HW:P2 | 0 | 0 | 2 | UNS.WORD | Immediately | |

| 1500 | **NUM_SPEED_FILTERS** [n] 0 ...7 Index of param.-set | | | | | CR: **/ DD2/** | |
|---|---|---|---|---|---|---|---|
| | Number of speed setpoint filters | | | FDD/MSD | | 2/4 | **810D** |
| - | 0 | 0 | 1 | UNS. WORD | | immediately | |

| 1500 | **NUM_SPEED_FILTERS** [n] 0 ...7 Index of param.-set | | | | | CR: **/ DL1/** | |
|---|---|---|---|---|---|---|---|
| D01 | Number of speed setpoint filters | | | FDD | LIN | 2/4 | **840D** |
| - | 0 | 0 | 2 | UNS. WORD | | immediately | |

| 1500 | **NUM_SPEED_FILTERS** [n] 0 ...7 Index of param.-set | | | | | CR: **/DD2 /** | |
|---|---|---|---|---|---|---|---|
| D01 | Number of speed setpoint filters | | | FDD/MSD | ROT | 2/4 | **840D** |
| - | 0 | 0 | 2 | UNS. WORD | | immediately | |

| 1501 | **SPEED_FILTER_TYPE** | | | | CR: **DD2, DL1** | |
|---|---|---|---|---|---|---|
| D01<br>- | Speed setpoint filter type | | | MSD SLM FDD | 2/4 | |
| HW:P2 | 0x0000 | 0x0000 | 0x8303 | UNS.WORD | Immediately | |

© Siemens AG 2004 All Rights Reserved

| 1501 | **SPEED_FILTER_TYPE** [n] 0 ...7 Index of param.-set | | | | | CR: **/DD2 /** | |
|---|---|---|---|---|---|---|---|
| D01 | Speed setpoint filter type (not 810D) | | | FDD/MSD | ROT | 2/4 | **840D** |
| - | 0 | 0 | 8303 | UNS. WORD | | immediately | |

| 1501 | **SPEED_FILTER_TYPE** [n] 0 ...7 Index of param.-set | | | | | CR: **/ DL1/** | |
|---|---|---|---|---|---|---|---|
| D01 | Speed setpoint filter type (not 810D) | | | FDD | LIN | 2/4 | **840D** |
| - | 0 | 0 | 8303 | UNS. WORD | | immediately | |

| 1502 | **SPEED_FILTER_1_TIME** | | | | CR: **DD2, DL1** |
|---|---|---|---|---|---|
| D01<br>ms | Time constant for speed setpoint filter 1 | | | MSD SLM FDD | 2/4 |
| HW:P2 | 0.000000 | 0.000000 | 500.000000 | FLOAT | Immediately |

| 1502 | **SPEED_FILTER_1_TIME** [n] 0 ...7 Index of param.-set | | | | | CR: **/ DD2/** | |
|---|---|---|---|---|---|---|---|
| | Time constant for speed setpoint filter 1 | | | FDD/MSD | | 2/4 | **810D** |
| ms | 0.0000 | 0.0000 | 150.0000 | FLOAT | | immediately | |

| 1502 | **SPEED_FILTER_1_TIME** [n] 0 ...7 Index of param.-set | | | | | CR: **/DD2 /** | |
|---|---|---|---|---|---|---|---|
| D01 | Time constant for speed setpoint filter 1 | | | FDD/MSD | ROT | 2/4 | **840D** |
| ms | 0.0000 | 0.0000 | 500.0000 | FLOAT | | immediately | |

| 1502 | **SPEED_FILTER_1_TIME** [n] 0 ...7 Index of param.-set | | | | | CR: **/ DL1/** | |
|---|---|---|---|---|---|---|---|
| D01 | Time constant for speed setpoint filter 1 | | | FDD | LIN | 2/4 | **840D** |
| ms | 0.0000 | 0.0000 | 500.0000 | FLOAT | | immediately | |

| 1503 | **SPEED_FILTER_2_TIME** | | | | CR: **DD2, DL1** |
|---|---|---|---|---|---|
| D01<br>ms | Time constant for speed setpoint filter 2 | | | MSD SLM FDD | 2/4 |
| HW:P2 | 0.000000 | 0.000000 | 500.000000 | FLOAT | Immediately |

| 1503 | **SPEED_FILTER_2_TIME** [n] 0 ...7 Index of param.-set | | | | | CR: **/DD2 /** | |
|---|---|---|---|---|---|---|---|
| D01 | Time constant for speed setpoint filter 2 (not 810D) | | | FDD/MSD | ROT | 2/4 | **840D** |
| ms | 0.0000 | 0.0000 | 500.0000 | FLOAT | | immediately | |

| 1503 | **SPEED_FILTER_2_TIME** [n] 0 ...7 Index of param.-set | | | | | CR: **/ DL1/** | |
|---|---|---|---|---|---|---|---|
| D01 | Time constant for speed setpoint filter 2 (not 810D) | | | FDD | LIN | 2/4 | **840D** |
| ms | 0.0000 | 0.0000 | 500.0000 | FLOAT | | immediately | |

| 1506 | **SPEED_FILTER_1_FREQUENCY** | | | | CR: **DD2, DL1** |
|---|---|---|---|---|---|
| D01, EXP<br>Hz | Natural frequency for speed setpoint filter 1 | | | MSD SLM FDD | 2/4 |
| HW:P2 | 2000.000000 | 10.000000 | 8000.000000 | FLOAT | Immediately |

| 1506 | **SPEED_FILTER_1_FREQUENCY** [n] 0 ...7 Index of param.-set | | | | | CR: **/ DL1/** | |
|---|---|---|---|---|---|---|---|
| D01, EXP | Natural frequency for speed setpoint filter 1 (not 810D) | | | FDD | LIN | 2/4 | **840D** |
| Hz | 2000.0000 | 10.0000 | 8000.0000 | FLOAT | | immediately | |

| 1506 | **SPEED_FILTER_1_FREQUENCY** [n] 0 ...7 Index of param.-set | | | | | CR: **/DD2 /** | |
|---|---|---|---|---|---|---|---|
| D01, EXP | Natural frequency for speed setpoint filter 1 (not 810D) | | | FDD/MSD | ROT | 2/4 | **840D** |
| Hz | 2000.0000 | 10.0000 | 8000.0000 | FLOAT | | immediately | |

| 1507 | **SPEED_FILTER_1_DAMPING** | | | | CR: **DD2, DL1** |
|---|---|---|---|---|---|
| D01, EXP<br>- | Damping for speed setpoint filter 1 | | | MSD SLM FDD | 2/4 |
| HW:P2 | 0.700000 | 0.200000 | 5.000000 | FLOAT | Immediately |

| 1507 | **SPEED_FILTER_1_DAMPING** [n] 0 ...7 Index of param.-set | | | | | CR: **/ DL1/** | |
|---|---|---|---|---|---|---|---|
| D01, EXP | Damping for speed setpoint filter 1 (not 810D) | | | FDD | LIN | 2/4 | **840D** |
| - | 0.7000 | 0.2000 | 5.0000 | FLOAT | | immediately | |

© Siemens AG 2004 All Rights Reserved

| 1507 | **SPEED_FILTER_1_DAMPING** [n] 0 ...7 Index of param.-set | | | | | CR: **/DD2 /** | |
|---|---|---|---|---|---|---|---|
| D01, EXP | Damping for speed setpoint filter 1 (not 810D) | | | FDD/MSD | ROT | 2/4 | **840D** |
| - | 0.7000 | 0.2000 | 5.0000 | FLOAT | | immediately | |

| 1508 | **SPEED_FILTER_2_FREQUENCY** | | | | CR: **DD2, DL1** |
|---|---|---|---|---|---|
| D01, EXP<br>Hz | Natural frequency for speed setpoint filter 2 | | | MSD SLM FDD | 2/4 |
| HW:P2 | 2000.000000 | 10.000000 | 8000.000000 | FLOAT | Immediately |

| 1508 | **SPEED_FILTER_2_FREQUENCY** [n] 0 ...7 Index of param.-set | | | | | CR: **/DD2 /** | |
|---|---|---|---|---|---|---|---|
| D01, EXP | Natural frequency for speed setpoint filter 2 (not 810D) | | | FDD/MSD | ROT | 2/4 | **840D** |
| Hz | 2000.0000 | 10.0000 | 8000.0000 | FLOAT | | immediately | |

| 1508 | **SPEED_FILTER_2_FREQUENCY** [n] 0 ...7 Index of param.-set | | | | | CR: **/ DL1/** | |
|---|---|---|---|---|---|---|---|
| D01, EXP | Natural frequency for speed setpoint filter 2 (not 810D) | | | FDD | LIN | 2/4 | **840D** |
| Hz | 2000.0000 | 10.0000 | 8000.0000 | FLOAT | | immediately | |

| 1509 | **SPEED_FILTER_2_DAMPING** | | | | CR: **DD2, DL1** |
|---|---|---|---|---|---|
| D01, EXP<br>- | Damping for speed setpoint filter 2 | | | MSD SLM FDD | 2/4 |
| HW:P2 | 0.700000 | 0.200000 | 5.000000 | FLOAT | Immediately |

| 1509 | **SPEED_FILTER_2_DAMPING** [n] 0 ...7 Index of param.-set | | | | | CR: **/ DL1/** | |
|---|---|---|---|---|---|---|---|
| D01, EXP | Damping for speed setpoint filter 2 (not 810D) | | | FDD | LIN | 2/4 | **840D** |
| - | 0.7000 | 0.2000 | 5.0000 | FLOAT | | immediately | |

| 1509 | **SPEED_FILTER_2_DAMPING** [n] 0 ...7 Index of param.-set | | | | | CR: **/DD2 /** | |
|---|---|---|---|---|---|---|---|
| D01, EXP | Damping for speed setpoint filter 2 (not 810D) | | | FDD/MSD | ROT | 2/4 | **840D** |
| - | 0.7000 | 0.2000 | 5.0000 | FLOAT | | immediately | |

| 1514 | **SPEED_FILTER_1_SUPPR_FREQ** | | | | CR: **DD2, DL1** |
|---|---|---|---|---|---|
| D01, EXP<br>Hz | Blocking frequency for speed setpoint filter 1 | | | MSD SLM FDD | 2/4 |
| HW:P2 | 3500.000000 | 1.000000 | 7999.000000 | FLOAT | Immediately |

| 1514 | **SPEED_FILTER_1_SUPPR_FREQ** [n] 0 ...7 Index of param.-set | | | | | CR: **/DD2 /** | |
|---|---|---|---|---|---|---|---|
| D01, EXP | Blocking frequency for speed setpoint filter 1 (not 810D) | | | FDD/MSD | ROT | 2/4 | **840D** |
| Hz | 3500.0000 | 1.0000 | 7999.0000 | FLOAT | | immediately | |

| 1514 | **SPEED_FILTER_1_SUPPR_FREQ** [n] 0 ...7 Index of param.-set | | | | | CR: **/ DL1/** | |
|---|---|---|---|---|---|---|---|
| D01, EXP | Blocking frequency for speed setpoint filter 1 (not 810D) | | | FDD | LIN | 2/4 | **840D** |
| Hz | 3500.0000 | 1.0000 | 7999.0000 | FLOAT | | immediately | |

| 1515 | **SPEED_FILTER_1_BANDWIDTH** | | | | CR: **DD2, DL1** |
|---|---|---|---|---|---|
| D01, EXP<br>Hz | Bandwidth for speed setpoint filter 1 | | | MSD SLM FDD | 2/4 |
| HW:P2 | 500.000000 | 5.000000 | 7999.000000 | FLOAT | Immediately |

| 1515 | **SPEED_FILTER_1_BANDWIDTH** [n] 0 ...7 Index of param.-set | | | | | CR: **/DD2 /** | |
|---|---|---|---|---|---|---|---|
| D01, EXP | Bandwidth for speed setpoint filter 1 (not 810D) | | | FDD/MSD | ROT | 2/4 | **840D** |
| Hz | 500.0000 | 5.0000 | 7999.0000 | FLOAT | | immediately | |

| 1515 | **SPEED_FILTER_1_BANDWIDTH** [n] 0 ...7 Index of param.-set | | | | | CR: **/ DL1/** | |
|---|---|---|---|---|---|---|---|
| D01, EXP | Bandwidth for speed setpoint filter 1 (not 810D) | | | FDD | LIN | 2/4 | **840D** |
| Hz | 500.0000 | 5.0000 | 7999.0000 | FLOAT | | immediately | |

| 1516 | **SPEED_FILTER_1_BW_NUMERATOR** | | | | CR: **DD2, DL1** |
|---|---|---|---|---|---|
| D01, EXP<br>Hz | Bandwidth numerator for speed setpoint filter 1 | | | MSD SLM FDD | 2/4 |
| HW:P2 | 0.000000 | 0.000000 | 7999.000000 | FLOAT | Immediately |

© Siemens AG 2004 All Rights Reserved

| 1516 | **SPEED_FILTER_1_BW_NUMERATOR** [n] 0 ...7 Index of param.-set | | | | | CR: **/DD2 /** | |
|---|---|---|---|---|---|---|---|
| D01, EXP | Bandwidth numerator for speed setpoint filter 1 (not 810D) | | | FDD/MSD | ROT | 2/4 | **840D** |
| Hz | 0.0000 | 0.0000 | 7999.0000 | FLOAT | | immediately | |

| 1516 | **SPEED_FILTER_1_BW_NUMERATOR** [n] 0 ...7 Index of param.-set | | | | | CR: **/ DL1/** | |
|---|---|---|---|---|---|---|---|
| D01, EXP | Bandwidth numerator for speed setpoint filter 1 (not 810D) | | | FDD | LIN | 2/4 | **840D** |
| Hz | 0.0000 | 0.0000 | 7999.0000 | FLOAT | | immediately | |

| 1517 | **SPEED_FILTER_2_SUPPR_FREQ** | | | | CR: **DD2, DL1** |
|---|---|---|---|---|---|
| D01, EXP<br>Hz | Blocking frequency for speed setpoint filter 2 | | | MSD SLM FDD | 2/4 |
| HW:P2 | 3500.000000 | 1.000000 | 7999.000000 | FLOAT | Immediately |

| 1517 | **SPEED_FILTER_2_SUPPR_FREQ** [n] 0 ...7 Index of param.-set | | | | | CR: **/DD2 /** | |
|---|---|---|---|---|---|---|---|
| D01, EXP | Blocking frequency for speed setpoint filter 2 (not 810D) | | | FDD/MSD | ROT | 2/4 | **840D** |
| Hz | 3500.0000 | 1.0000 | 7999.0000 | FLOAT | | immediately | |

| 1517 | **SPEED_FILTER_2_SUPPR_FREQ** [n] 0 ...7 Index of param.-set | | | | | CR: **/ DL1/** | |
|---|---|---|---|---|---|---|---|
| D01, EXP | Blocking frequency for speed setpoint filter 2 (not 810D) | | | FDD | LIN | 2/4 | **840D** |
| Hz | 3500.0000 | 1.0000 | 7999.0000 | FLOAT | | immediately | |

| 1518 | **SPEED_FILTER_2_BANDWIDTH** | | | | CR: **DD2, DL1** |
|---|---|---|---|---|---|
| D01, EXP<br>Hz | Bandwidth for speed setpoint filter 2 | | | MSD SLM FDD | 2/4 |
| HW:P2 | 500.000000 | 5.000000 | 7999.000000 | FLOAT | Immediately |

| 1518 | **SPEED_FILTER_2_BANDWIDTH** [n] 0 ...7 Index of param.-set | | | | | CR: **/DD2 /** | |
|---|---|---|---|---|---|---|---|
| D01, EXP | Bandwidth for speed setpoint filter 2 (not 810D) | | | FDD/MSD | ROT | 2/4 | **840D** |
| Hz | 500.0000 | 5.0000 | 7999.0000 | FLOAT | | immediately | |

| 1518 | **SPEED_FILTER_2_BANDWIDTH** [n] 0 ...7 Index of param.-set | | | | | CR: **/ DL1/** | |
|---|---|---|---|---|---|---|---|
| D01, EXP | Bandwidth for speed setpoint filter 2 (not 810D) | | | FDD | LIN | 2/4 | **840D** |
| Hz | 500.0000 | 5.0000 | 7999.0000 | FLOAT | | immediately | |

| 1519 | **SPEED_FILTER_2_BW_NUMERATOR** | | | | CR: **DD2, DL1** |
|---|---|---|---|---|---|
| D01, EXP<br>Hz | Bandwidth numerator for speed setpoint filter 2 | | | MSD SLM FDD | 2/4 |
| HW:P2 | 0.000000 | 0.000000 | 7999.000000 | FLOAT | Immediately |

| 1519 | **SPEED_FILTER_2_BW_NUMERATOR** [n] 0 ...7 Index of param.-set | | | | | CR: **/ DL1/** | |
|---|---|---|---|---|---|---|---|
| D01, EXP | Bandwidth numerator for speed setpoint filter 2 (not 810D) | | | FDD | LIN | 2/4 | **840D** |
| Hz | 0.0000 | 0.0000 | 7999.0000 | FLOAT | | immediately | |

| 1519 | **SPEED_FILTER_2_BW_NUMERATOR** [n] 0 ...7 Index of param.-set | | | | | CR: **/DD2 /** | |
|---|---|---|---|---|---|---|---|
| D01, EXP | Bandwidth numerator for speed setpoint filter 2 (not 810D) | | | FDD/MSD | ROT | 2/4 | **840D** |
| Hz | 0.0000 | 0.0000 | 7999.0000 | FLOAT | | immediately | |

| 1520 | **SPEED_FILTER_1_BS_FREQ** | | | | CR: **DD2, DL1** |
|---|---|---|---|---|---|
| D01, EXP<br>% | BSF natural frequency for speed setpoint filter 1 | | | MSD SLM FDD | 2/4 |
| HW:P2 | 100.000000 | 1.000000 | 141.000000 | FLOAT | Immediately |

| 1520 | **SPEED_FILTER_1_BS_FREQ** [n] 0 ...7 Index of param.-set | | | | | CR: **/DD2 /** | |
|---|---|---|---|---|---|---|---|
| D01, EXP | BSF natural frequency for speed setpoint filter 1 (not 810D) | | | FDD/MSD | ROT | 2/4 | **840D** |
| % | 100.0000 | 1.0000 | 141.0000 | FLOAT | | immediately | |

© Siemens AG 2004 All Rights Reserved

| 1520 | **SPEED_FILTER_1_BS_FREQ** [n] 0 ...7 Index of param.-set | | | | | CR: **/ DL1/** | |
|---|---|---|---|---|---|---|---|
| D01, EXP | BSF natural frequency for speed setpoint filter 1 (not 810D) | | | FDD | LIN | 2/4 | **840D** |
| % | 100.0000 | 1.0000 | 141.0000 | FLOAT | | immediately | |

| 1521 | **SPEED_FILTER_2_BS_FREQ** | | | | CR: **DD2, DL1** |
|---|---|---|---|---|---|
| D01, EXP<br>% | BSF natural frequency for speed setpoint filter 2 | | | MSD SLM FDD | 2/4 |
| HW:P2 | 100.000000 | 1.000000 | 141.000000 | FLOAT | Immediately |

| 1521 | **SPEED_FILTER_2_BS_FREQ** [n] 0 ...7 Index of param.-set | | | | | CR: **/DD2 /** | |
|---|---|---|---|---|---|---|---|
| D01, EXP | BSF natural frequency for speed setpoint filter 2 (not 810D) | | | FDD/MSD | ROT | 2/4 | **840D** |
| % | 100.0000 | 1.0000 | 141.0000 | FLOAT | | immediately | |

| 1521 | **SPEED_FILTER_2_BS_FREQ** [n] 0 ...7 Index of param.-set | | | | | CR: **/ DL1/** | |
|---|---|---|---|---|---|---|---|
| D01, EXP | BSF natural frequency for speed setpoint filter 2 (not 810D) | | | FDD | LIN | 2/4 | **840D** |
| % | 100.0000 | 1.0000 | 141.0000 | FLOAT | | immediately | |

| 1522 | **ACT_SPEED_FILTER_TIME** | | | | CR: **DD2** |
|---|---|---|---|---|---|
| D01<br>ms | Time const. actual speed value filter | | | MSD SLM FDD | 2/4 |
| HW:P2 | 0.000000 | 0.000000 | 500.000000 | FLOAT | Immediately |

| 1522 | **ACT_SPEED_FILTER_TIME** | | | | | CR: **/ DD2 /** | |
|---|---|---|---|---|---|---|---|
| D01 | Time const. actual speed value filter (not 810D) | | | FDD/MSD | ROT/LIN | 2/4 | **840D** |
| - | 0 | 0 | 0 | UNS. WORD | | PowerOn | |

| 1550 | **ACC_SENS_REF** | | | | CR: **DÜ1** |
|---|---|---|---|---|---|
| D01<br>- | Reference value accel. sensor f. 1V | | | MSD SLM FDD | 2/4 |
| HW:P2 | 1000.000000 | -1000000.000000 | 1000000.000000 | FLOAT | Immediately |

| 1560 | **ACC_MODE** | | | | CR: **DÜ1** |
|---|---|---|---|---|---|
| D01<br>- | Acceleration evaluation mode | | | MSD SLM FDD | 2/4 |
| HW:P2 | 0x0000 | 0x0000 | 0x1FFF | UNS.WORD | Immediately |

| 1561 | **ACC_SENS_RESOL** | | | | CR: **DÜ1** |
|---|---|---|---|---|---|
| D01<br>- | Accel. sensor resolution bits | | | MSD SLM FDD | 2/4 |
| HW:P2 | 0 | 0 | 12 | UNS.WORD | Power On |

| 1562 | **FACTOR_MM_DM** | | | | CR: **DÜ1** |
|---|---|---|---|---|---|
| D01<br>- | Ratio motor : DM | | | MSD SLM FDD | 2/4 |
| HW:P2 | 1.000000 | -1000000.000000 | 1000000.000000 | FLOAT | Immediately |

| 1563 | **ACC_HIGH_PASS_TIME** | | | | CR: **DÜ1** |
|---|---|---|---|---|---|
| D01<br>ms | Time const. accel. high pass | | | MSD SLM FDD | 2/4 |
| HW:P2 | 1000.0 | 0.000000 | 5000.000000 | FLOAT | Immediately |

| 1564 | **LOAD_SPEEDCTL_DIFF_TIME** | | | | CR: **DÜ1** |
|---|---|---|---|---|---|
| D01<br>ms | Lead time for load speed controller | | | MSD SLM FDD | 2/4 |
| HW:P2 | 0.000000 | -1000.000000 | 1000.000000 | FLOAT | Immediately |

© Siemens AG 2004 All Rights Reserved

| 1565 | LOAD_SPEEDCTL_GAIN | | | | CR: DÜ1 | |
|---|---|---|---|---|---|---|
| D01<br>- | P gain of load speed controller | | | MSD SLM FDD | 2/4 | |
| HW:P2 | 0.000000 | -256.000000 | 256.000000 | FLOAT | Immediately | |

| 1566 | LOAD_SPEEDCTL_LIMIT | | | | CR: DÜ1 | |
|---|---|---|---|---|---|---|
| D01<br>ROT: 1/min<br>LIN: m/min | Limitation of load speed controller | | | MSD SLM FDD | 2/4 | |
| HW:P2 | 500.000000 | 0.000000 | 100000.000000 | FLOAT | Immediately | |

| 1569 | ACC_FIL_DOWNSCAN | | | | CR: DÜ1 | |
|---|---|---|---|---|---|---|
| D01<br>- | Sub-sampling accel. filter | | | MSD SLM FDD | 2/4 | |
| HW:P2 | 1 | 1 | 64 | UNS.WORD | Immediately | |

| 1570 | ACC_FILTER_TYPE | | | | CR: DÜ1 | |
|---|---|---|---|---|---|---|
| D01<br>- | Type of acceleration filter | | | MSD SLM FDD | 2/4 | |
| HW:P2 | 0x0000 | 0x0000 | 0x0307 | UNS.WORD | Immediately | |

| 1571 | ACC_FILTER_TIME1 | | | | CR: DÜ1 | |
|---|---|---|---|---|---|---|
| D01<br>ms | Time constant acceleration f.1 | | | MSD SLM FDD | 2/4 | |
| HW:P2 | 1.000000 | 0.000000 | 500.000000 | FLOAT | Immediately | |

| 1572 | ACC_DENOM_FILTER_FREQU1 | | | | CR: DÜ1 | |
|---|---|---|---|---|---|---|
| D01, EXP<br>Hz | Natural denominator freq. accel. filter 1 | | | MSD SLM FDD | 2/4 | |
| HW:P2 | 2000.000000 | 2.000000 | 8000.000000 | FLOAT | Immediately | |

| 1573 | ACC_DENOM_FILTER_DAMP1 | | | | CR: DÜ1 | |
|---|---|---|---|---|---|---|
| D01, EXP<br>- | Denominator attenuation, accel. filter 1" | | | MSD SLM FDD | 2/4 | |
| HW:P2 | 0.500000 | 0.000000 | 10.000000 | FLOAT | Immediately | |

| 1574 | ACC_NOM_FILTER_FREQU1 | | | | CR: DÜ1 | |
|---|---|---|---|---|---|---|
| D01, EXP<br>Hz | Natural numerator frequ. accel. filter 1 | | | MSD SLM FDD | 2/4 | |
| HW:P2 | 2000.000000 | 2.000000 | 8000.000000 | FLOAT | Immediately | |

| 1575 | ACC_NOM_FILTER_DAMP1 | | | | CR: DÜ1 | |
|---|---|---|---|---|---|---|
| D01, EXP<br>- | Numerator attenuation accel. filter 1 | | | MSD SLM FDD | 2/4 | |
| HW:P2 | 0.500000 | 0.000000 | 10.000000 | FLOAT | Immediately | |

| 1576 | ACC_FILTER_TIME2 | | | | CR: DÜ1 | |
|---|---|---|---|---|---|---|
| D01<br>ms | Time constant accel. f.2 | | | MSD SLM FDD | 2/4 | |
| HW:P2 | 1.000000 | 0.000000 | 500.000000 | FLOAT | Immediately | |

| 1577 | ACC_DENOM_FILTER_FREQU2 | | | | CR: DÜ1 | |
|---|---|---|---|---|---|---|
| D01, EXP<br>Hz | Natural denominator freq., accel. filter 2 | | | MSD SLM FDD | 2/4 | |
| HW:P2 | 2000.000000 | 2.000000 | 8000.000000 | FLOAT | Immediately | |

| 1578 | ACC_DENOM_FILTER_DAMP2 | | | | CR: DÜ1 | |
|---|---|---|---|---|---|---|
| D01, EXP<br>- | Denominator attenuation, accel. filter 2 | | | MSD SLM FDD | 2/4 | |
| HW:P2 | 0.500000 | 0.000000 | 10.000000 | FLOAT | Immediately | |

© Siemens AG 2004 All Rights Reserved

| 1579 | ACC_NOM_FILTER_FREQU2 | | | | CR: DÜ1 | |
|---|---|---|---|---|---|---|
| D01, EXP<br>Hz | Natural numerator frequ., accel. filter 2 | | | MSD SLM FDD | 2/4 | |
| HW:P2 | 2000.000000 | 2.000000 | 8000.000000 | FLOAT | Immediately | |

| 1580 | ACC_NOM_FILTER_DAMP2 | | | | CR: DÜ1 | |
|---|---|---|---|---|---|---|
| D01, EXP<br>- | Numerator attenuation, accel. filter 2 | | | MSD SLM FDD | 2/4 | |
| HW:P2 | 0.500000 | 0.000000 | 10.000000 | FLOAT | Immediately | |

| 1581 | ACC_DENOM_FILTER_FREQU3 | | | | CR: DÜ1 | |
|---|---|---|---|---|---|---|
| D01, EXP<br>Hz | Natural denominator frequ., accel. filter 3 | | | MSD SLM FDD | 2/4 | |
| HW:P2 | 2000.000000 | 2.000000 | 8000.000000 | FLOAT | Immediately | |

| 1582 | ACC_DENOM_FILTER_DAMP3 | | | | CR: DÜ1 | |
|---|---|---|---|---|---|---|
| D01, EXP<br>- | Denominator attenuation, accel. filter 3 | | | MSD SLM FDD | 2/4 | |
| HW:P2 | 0.500000 | 0.000000 | 10.000000 | FLOAT | Immediately | |

| 1583 | ACC_NOM_FILTER_FREQU3 | | | | CR: DÜ1 | |
|---|---|---|---|---|---|---|
| D01, EXP<br>Hz | Natural numerator frequ., accel. filter 3 | | | MSD SLM FDD | 2/4 | |
| HW:P2 | 2000.000000 | 2.000000 | 8000.000000 | FLOAT | Immediately | |

| 1584 | ACC_NOM_FILTER_DAMP3 | | | | CR: DÜ1 | |
|---|---|---|---|---|---|---|
| D01, EXP<br>- | Numerator attenuation, accel. filter 3 | | | MSD SLM FDD | 2/4 | |
| HW:P2 | 0.500000 | 0.000000 | 10.000000 | FLOAT | Immediately | |

| 1600 | ALARM_MASK_POWER_ON | | | | CR: DB1 | |
|---|---|---|---|---|---|---|
| D02, EXP<br>- | Suppressible alarms (Power-On) | | | MSD SLM FDD | 2/4 | |
| HW:P2 | 0x0000 | 0x0000 | 0x83be | UNS.WORD | Immediately | |

| 1600 | ALARM_MASK_POWER_ON | | | | | CR: / DB1/ | |
|---|---|---|---|---|---|---|---|
| | Suppressible alarms (Power-On) | | | FDD/MSD | | 2/4 | 810D |
| - | 0 | 0 | ffff | UNS. WORD | | immediately | |

| 1600 | ALARM_MASK_POWER_ON | | | | | CR: / DB1 / | |
|---|---|---|---|---|---|---|---|
| D02, EXP | Suppressible alarms (Power-On) | | | FDD/MSD | ROT/LIN | 2/4 | 840D |
| - | 0 | 0 | 83be | UNS. WORD | | immediately | |

| 1601 | ALARM_MASK_RESET | | | | CR: DB1 | |
|---|---|---|---|---|---|---|
| D02, EXP<br>- | Suppressible alarms (reset) | | | MSD SLM FDD | 2/4 | |
| HW:P2 | 0x0000 | 0x0000 | 0xFFFF | UNS.WORD | Immediately | |

| 1601 | ALARM_MASK_RESET | | | | | CR: / DB1 / | |
|---|---|---|---|---|---|---|---|
| D02, EXP | Suppressible alarms (reset) | | | FDD/MSD | ROT/LIN | 2/4 | |
| - | 0 | 0 | ffff | UNS. WORD | | immediately | |

| 1602 | MOTOR_TEMP_WARN_LIMIT | | | | CR: DÜ1 | |
|---|---|---|---|---|---|---|
| D02, D05<br>C | Motor temperature alarm threshold | | | MSD SLM FDD | 2/4 | |
| HW:P2 | 120 | 0 | 200 | UNS.WORD | Immediately | |

| 1602 | MOTOR_TEMP_WARN_LIMIT | | | | | CR: / DÜ1 / | |
|---|---|---|---|---|---|---|---|
| D02, D05 | Motor temperature alarm threshold | | | FDD/MSD | ROT/LIN | 2/4 | |
| | 120 | 0 | 200 | UNS. WORD | | immediately | |

© Siemens AG 2004 All Rights Reserved

| 1603 | MOTOR_TEMP_ALARM_TIME | | | | CR: DÜ1 | |
|---|---|---|---|---|---|---|
| D02, D05<br>s | Time for motor temperature alarm | | | MSD SLM FDD | 2/4 | |
| HW:P2 | 240 | 0 | 600 | UNS.WORD | Immediately | |

| 1603 | MOTOR_TEMP_ALARM_TIME | | | | | CR: / DÜ1 / | |
|---|---|---|---|---|---|---|---|
| D02, D05 | Time for motor temperature alarm | | | FDD/MSD | ROT/LIN | 2/4 | |
| s | 240 | 0 | 600 | UNS. WORD | | immediately | |

| 1604 | LINK_VOLTAGE_WARN_LIMIT | | | | CR: DÜ1 | |
|---|---|---|---|---|---|---|
| D02, EXP<br>V | DC-link undervoltage alarm threshold | | | MSD SLM FDD | 2/4 | |
| HW:P2 | 200 | 0 | 680 | UNS.WORD | Immediately | |

| 1604 | LINK_VOLTAGE_WARN_LIMIT | | | | | CR: / DÜ1/ | |
|---|---|---|---|---|---|---|---|
| | DC-link undervoltage alarm threshold | | | FDD/MSD | | 2/4 | 810D |
| V | 200 | 0 | 600 | UNS. WORD | | immediately | |

| 1604 | LINK_VOLTAGE_WARN_LIMIT | | | | | CR: / DÜ1 / | |
|---|---|---|---|---|---|---|---|
| D02, EXP | DC-link undervoltage alarm threshold | | | FDD/MSD | ROT/LIN | 2/4 | 840D |
| V | 200 | 0 | 680 | UNS. WORD | | immediately | |

| 1605 | SPEEDCTRL_LIMIT_TIME | | | | CR: DÜ1 | |
|---|---|---|---|---|---|---|
| D02<br>ms | Time n-controller at limit stop | | | MSD SLM FDD | 2/4 | |
| HW:P2 | 200.000000 | 20.000000 | 10000.000000 | FLOAT | Immediately | |

| 1605 | SPEEDCTRL_LIMIT_TIME | | | | | CR: / DÜ1 / | |
|---|---|---|---|---|---|---|---|
| D02 | Time n-controller at limit stop | | | FDD/MSD | ROT/LIN | 2/4 | |
| ms | 200.0000 | 20.0000 | 10000.0000 | FLOAT | | immediately | |

| 1606 | SPEEDCTRL_LIMIT_THRESHOLD | | | | CR: DÜ1, DL1 | |
|---|---|---|---|---|---|---|
| D02<br>ROT: 1/min<br>LIN: m/min | Threshold n-controller at limit stop | | | MSD SLM FDD | 2/4 | |
| HW:P2 | ROT: 8000.000000<br>LIN: 500.000000 | 0.000000 | 100000.000000 | FLOAT | Immediately | |

| 1606 | SPEEDCTRL_LIMIT_THRESHOLD | | | | | CR: / DÜ1/ | |
|---|---|---|---|---|---|---|---|
| | Threshold n-controller at limit stop | | | FDD/MSD | | 2/4 | 810D |
| 1/min | 8000.0000<br>HSA: 30.0000 | 0.0000 | 50000.0000 | FLOAT | | immediately | |

| 1606 | SPEEDCTRL_LIMIT_THRESHOLD | | | | | CR: /DÜ1 / | |
|---|---|---|---|---|---|---|---|
| D02 | Threshold n-controller at limit stop | | | FDD/MSD | ROT | 2/4 | 840D |
| 1/min | 90000.0000<br>HSA: 30.0000 | 0.0000 | 100000.0000 | FLOAT | | immediately | |

| 1606 | SPEEDCTRL_LIMIT_THRESHOLD | | | | | CR: / DL1/ | |
|---|---|---|---|---|---|---|---|
| D02 | Threshold speed controller limit | | | FDD | LIN | 2/4 | 840D |
| m/min | 500.0000 | 0.0000 | 100000.0000 | FLOAT | | immediately | |

| 1607 | MOTOR_TEMP_SHUTDOWN_LIMIT | | | | CR: DÜ1 | |
|---|---|---|---|---|---|---|
| D02, D05<br>C | Motor temperature shutdown limit | | | MSD SLM FDD | 2/4 | |
| HW:P2 | 155 | 0 | 200 | UNS.WORD | Immediately | |

| 1607 | MOTOR_TEMP_SHUTDOWN_LIMIT | | | | | CR: / DÜ1 / | |
|---|---|---|---|---|---|---|---|
| D02, D05 | Motor temperature shutdown limit | | | FDD/MSD | ROT/LIN | 2/4 | |
| | 155 | 0 | 200 | UNS. WORD | | immediately | |

© Siemens AG 2004 All Rights Reserved

| 1608 | MOTOR_FIXED_TEMPERATURE | | | | CR: DÜ1 | |
|---|---|---|---|---|---|---|
| D02, D05<br>C | Fixed temperature | | | MSD SLM FDD | 2/4 | |
| HW:P2 | 0 | 0 | 200 | UNS.WORD | Immediately | |

| 1608 | MOTOR_FIXED_TEMPERATURE | | | | CR: / DÜ1 / | |
|---|---|---|---|---|---|---|
| D02, D05 | Fixed temperature | | | FDD/MSD ROT/LIN | 2/4 | |
| | 0 | 0 | 200 | UNS. WORD | immediately | |

| 1610 | DIAGNOSIS_ACTIVATION_FLAGS | | | | CR: DD1 | |
|---|---|---|---|---|---|---|
| D04<br>- | Diagnostic functions | | | MSD SLM FDD | 2/4 | |
| HW:P2 | 0x0000 | 0x0000 | 0x0003 | UNS.WORD | Power On | |

| 1610 | DIAGNOSIS_ACTIVATION_FLAGS | | | | CR: / DD1 / | |
|---|---|---|---|---|---|---|
| D04, EXP | Diagnostic functions (not 810D) | | | FDD/MSD ROT/LIN | 2/4 | 840D |
| - | 0<br>HSA: 1 | 0 | 3 | UNS. WORD | PowerOn | |

| 1611 | DNDT_THRESHOLD | | | | CR: DD1 | |
|---|---|---|---|---|---|---|
| D04<br>% | Response threshold dn/dt | | | MSD SLM FDD | 2/4 | |
| HW:P2 | 800 | 0 | 1600 | UNS.WORD | Immediately | |

| 1611 | DNDT_THRESHOLD | | | | CR: / DD1 / | |
|---|---|---|---|---|---|---|
| D04, EXP | Response threshold dn/dt | | | FDD/MSD ROT/LIN | 2/4 | |
| % | 800 | 0 | 1600 | UNS. WORD | immediately | |

| 1612 | ALARM_REACTION_POWER_ON | | | | CR: DB1 | |
|---|---|---|---|---|---|---|
| D02<br>- | Configuring shutdown response to PO alarms | | | MSD SLM FDD | 2/4 | |
| HW:P2 | 0x0fbc | 0x0000 | 0xffff | UNS.WORD | Immediately | |

| 1612 | ALARM_REACTION_POWER_ON | | | | CR: / DB1/ | |
|---|---|---|---|---|---|---|
| | Configuring shutdown response to PO alarms | | | FDD/MSD | 2/4 | 810D |
| - | db2<br>HSA: ffff | 0 | ffff | UNS. WORD | immediately | |

| 1612 | ALARM_REACTION_POWER_ON | | | | CR: / DB1 / | |
|---|---|---|---|---|---|---|
| D02 | Configuring shutdown response to PO alarms | | | FDD/MSD ROT/LIN | 2/4 | 840D |
| - | fbc<br>HSA: ffff | 0 | ffff | UNS. WORD | immediately | |

| 1613 | ALARM_REACTION_RESET | | | | CR: DB1 | |
|---|---|---|---|---|---|---|
| D02<br>- | Configuring shutdown response to RESET alarms | | | MSD SLM FDD | 2/4 | |
| HW:P2 | 0x0100 | 0x0000 | 0xffff | UNS.WORD | Immediately | |

| 1613 | ALARM_REACTION_RESET | | | | CR: / DB1 / | |
|---|---|---|---|---|---|---|
| D02 | Configuring shutdown response to RESET alarms | | | FDD/MSD ROT/LIN | 2/4 | |
| - | 100<br>HSA: ffff | 0 | ffff | UNS. WORD | immediately | |

| 1615 | SMOOTH_RUN_TOL | | | | CR: DD1, DL1 | |
|---|---|---|---|---|---|---|
| EXP<br>ROT: 1/min<br>LIN: m/min | Smooth running monitoring tolerance | | | MSD SLM FDD | 0/0 | |
| HW:P2 | ROT: 2.000000<br>LIN: 0.200000 | 0.000000 | 100.000000 | FLOAT | Immediately | |

© Siemens AG 2004 All Rights Reserved

| 1615 | SMOOTH_RUN_TOL | | | | | CR: / DD1/ | |
|---|---|---|---|---|---|---|---|
| | Smooth running monitoring tolerance | | | FDD/MSD | | 2/4 | 810D |
| 1/min | 2.0000 | 0.0000 | 100.0000 | FLOAT | | immediately | |

| 1615 | SMOOTH_RUN_TOL | | | | | CR: /DD1 / | |
|---|---|---|---|---|---|---|---|
| EXP | Smooth running monitoring tolerance | | | FDD/MSD | ROT | 0/0 | 840D |
| 1/min | 2.0000 | 0.0000 | 100.0000 | FLOAT | | immediately | |

| 1615 | SMOOTH_RUN_TOL | | | | | CR: / DL1/ | |
|---|---|---|---|---|---|---|---|
| EXP | Tolerance bandwidth for the smooth running monit. | | | FDD | LIN | 0/0 | 840D |
| m/min | 0.2000 | 0.0000 | 100.0000 | FLOAT | | immediately | |

| 1620 | PROG_SIGNAL_FLAGS | | | | CR: DD1 | |
|---|---|---|---|---|---|---|
| D03<br>- | Variable message function bits | | | MSD SLM FDD | 2/4 | |
| HW:P2 | 0x0000 | 0x0000 | 0x0007 | UNS.WORD | Immediately | |

| 1620 | PROG_SIGNAL_FLAGS | | | | | CR: / DD1 / | |
|---|---|---|---|---|---|---|---|
| D03 | Variable message function bits (not 810D) | | | FDD/MSD | ROT/LIN | 2/4 | 840D |
| - | 0 | 0 | 7 | UNS. WORD | | immediately | |

| 1621 | PROG_SIGNAL_NR | | | | CR: DD1 | |
|---|---|---|---|---|---|---|
| D03<br>- | Signal number, variable message function | | | MSD SLM FDD | 2/4 | |
| HW:P2 | 0 | 0 | 100 | UNS.WORD | Immediately | |

| 1621 | PROG_SIGNAL_NR | | | | | CR: / DD1 / | |
|---|---|---|---|---|---|---|---|
| D03 | Signal number, variable message function (not 810D) | | | FDD/MSD | ROT/LIN | 2/4 | 840D |
| - | 0 | 0 | 100 | UNS. WORD | | immediately | |

| 1622 | PROG_SIGNAL_ADDRESS | | | | CR: DD1 | |
|---|---|---|---|---|---|---|
| D03<br>- | Address, variable message function | | | MSD SLM FDD | 2/4 | |
| HW:P2 | 0 | 0 | 65535 | UNS.WORD | Immediately | |

| 1622 | PROG_SIGNAL_ADDRESS | | | | | CR: / DD1 / | |
|---|---|---|---|---|---|---|---|
| D03 | Address, variable message function (not 810D) | | | FDD/MSD | ROT/LIN | 2/4 | 840D |
| - | 0 | 0 | 65535 | UNS. WORD | | immediately | |

| 1623 | PROG_SIGNAL_THRESHOLD | | | | CR: DD1 | |
|---|---|---|---|---|---|---|
| D03<br>- | Threshold, variable message function | | | MSD SLM FDD | 2/4 | |
| HW:P2 | 0 | 0 | 16777215 | UNS.DWORD | Immediately | |

| 1623 | PROG_SIGNAL_THRESHOLD | | | | | CR: / DD1 / | |
|---|---|---|---|---|---|---|---|
| D03 | Threshold, variable message function (not 810D) | | | FDD/MSD | ROT/LIN | 2/4 | 840D |
| - | 0 | 0 | 16777215 | UNS. DWORD | | immediately | |

| 1624 | PROG_SIGNAL_HYSTERESIS | | | | CR: DD1 | |
|---|---|---|---|---|---|---|
| D03<br>- | Hysteresis, variable message function | | | MSD SLM FDD | 2/4 | |
| HW:P2 | 0 | 0 | 16777215 | UNS.DWORD | Immediately | |

| 1624 | PROG_SIGNAL_HYSTERESIS | | | | | CR: / DD1 / | |
|---|---|---|---|---|---|---|---|
| D03 | Hysteresis, variable message function (not 810D) | | | FDD/MSD | ROT/LIN | 2/4 | 840D |
| - | 0 | 0 | 16777215 | UNS. DWORD | | immediately | |

| 1625 | PROG_SIGNAL_ON_DELAY | | | | CR: DD1 | |
|---|---|---|---|---|---|---|
| D03<br>ms | Pickup delay time, variable message function | | | MSD SLM FDD | 2/4 | |
| HW:P2 | 0 | 0 | 10000 | UNS.WORD | Immediately | |

© Siemens AG 2004 All Rights Reserved

| 1625 | PROG_SIGNAL_ON_DELAY | | | | | CR: / DD1 / | |
|---|---|---|---|---|---|---|---|
| D03 | Pickup delay time, variable message function (not 810D) | | | FDD/MSD | ROT/LIN | 2/4 | 840D |
| ms | 0 | 0 | 10000 | UNS. WORD | | immediately | |

| 1626 | PROG_SIGNAL_OFF_DELAY | | | | CR: DD1 | |
|---|---|---|---|---|---|---|
| D03<br>ms | Dropout delay, variable message function | | | MSD SLM FDD | 2/4 | |
| HW:P2 | 0 | 0 | 10000 | UNS.WORD | Immediately | |

| 1626 | PROG_SIGNAL_OFF_DELAY | | | | | CR: / DD1 / | |
|---|---|---|---|---|---|---|---|
| D03 | Dropout delay, variable message function (not 810D) | | | FDD/MSD | ROT/LIN | 2/4 | 840D |
| ms | 0 | 0 | 10000 | UNS. WORD | | immediately | |

| 1630 | LINK_VOLTAGE_MON_THRESHOLD | | | | CR: DÜ1 | |
|---|---|---|---|---|---|---|
| EXP<br>V | Response threshold, only DC link monitoring | | | MSD SLM FDD | 2/4 | |
| HW:P2 | 550 | 0 | 680 | UNS.WORD | Immediately | |

| 1630 | LINK_VOLTAGE_MON_THRESHOLD | | | | | CR: / DÜ1 / | |
|---|---|---|---|---|---|---|---|
| EXP | Response threshold, only DC link monitoring (not 810D) | | | FDD/MSD | ROT/LIN | 2/4 | 840D |
| V | 550 | 0 | 680 | UNS. WORD | | immediately | |

| 1631 | LINK_VOLTAGE_GEN_ON | | | | CR: DE1 | |
|---|---|---|---|---|---|---|
| EXP<br>V | Response voltage of generator axis | | | MSD SLM FDD | 2/4 | |
| HW:P2 | 450 | 280 | 650 | UNS.WORD | Immediately | |

| 1631 | LINK_VOLTAGE_GEN_ON | | | | | CR: / DE1 / | |
|---|---|---|---|---|---|---|---|
| EXP | Response voltage of generator axis (not 810D) | | | FDD/MSD | ROT/LIN | 2/4 | 840D |
| V | 450 | 280 | 650 | UNS. WORD | | immediately | |

| 1632 | LINK_VOLTAGE_GEN_HYST | | | | CR: DE1 | |
|---|---|---|---|---|---|---|
| EXP<br>V | Voltage range for generator control | | | MSD SLM FDD | 2/4 | |
| HW:P2 | 30 | 0 | 300 | UNS.WORD | Immediately | |

| 1632 | LINK_VOLTAGE_GEN_HYST | | | | | CR: / DE1 / | |
|---|---|---|---|---|---|---|---|
| EXP | Voltage range for generator control (not 810D) | | | FDD/MSD | ROT/LIN | 2/4 | 840D |
| V | 30 | 0 | 300 | UNS. WORD | | immediately | |

| 1633 | LINK_VOLTAGE_GEN_OFF | | | | CR: DE1 | |
|---|---|---|---|---|---|---|
| EXP<br>V | Shutdown threshold of generator operation | | | MSD SLM FDD | 2/4 | |
| HW:P2 | 510 | 0 | 660 | UNS.WORD | Immediately | |

| 1633 | LINK_VOLTAGE_GEN_OFF | | | | | CR: / DE1 / | |
|---|---|---|---|---|---|---|---|
| EXP | Shutdown threshold of generator operation (not 810D) | | | FDD/MSD | ROT/LIN | 2/4 | 840D |
| V | 510 | 0 | 660 | UNS. WORD | | immediately | |

| 1634 | LINK_VOLTAGE_RETRACT | | | | CR: DE1 | |
|---|---|---|---|---|---|---|
| EXP<br>V | Response threshold emergency retraction | | | MSD SLM FDD | 2/4 | |
| HW:P2 | 400 | 0 | 660 | UNS.WORD | Immediately | |

| 1634 | LINK_VOLTAGE_RETRACT | | | | | CR: / DE1 / | |
|---|---|---|---|---|---|---|---|
| EXP | Response threshold emergency retraction (not 810D) | | | FDD/MSD | ROT/LIN | 2/4 | 840D |
| V | 400 | 0 | 660 | UNS. WORD | | immediately | |

© Siemens AG 2004 All Rights Reserved

| 1635 | GEN_AXIS_MIN_SPEED | | | | | CR: DE1, DL1 | |
|---|---|---|---|---|---|---|---|
| EXP<br>ROT: 1/min<br>LIN: m/min | Minimum speed of the generator axis | | | MSD SLM FDD | | 2/4 | |
| HW:P2 | 0.000000 | 0.000000 | 100000.000000 | FLOAT | | Immediately | |

| 1635 | GEN_AXIS_MIN_SPEED | | | | | CR: /DE1 / | |
|---|---|---|---|---|---|---|---|
| EXP | Minimum speed of the generator axis (not 810D) | | | FDD/MSD | ROT | 2/4 | 840D |
| 1/min | 0.0000 | 0.0000 | 100000.0000 | FLOAT | | immediately | |

| 1635 | GEN_AXIS_MIN_SPEED | | | | | CR: / DL1/ | |
|---|---|---|---|---|---|---|---|
| EXP | Minimum speed generator axis (not 810D) | | | FDD | LIN | 2/4 | 840D |
| m/min | 0.0000 | 0.0000 | 100000.0000 | FLOAT | | immediately | |

| 1636 | RETRACT_AND_GENERATOR_MODE | | | | CR: DE1 | |
|---|---|---|---|---|---|---|
| EXP<br>- | Operating mode emergency retraction/gen. operation | | | MSD SLM FDD | 2/4 | |
| HW:P2 | 0 | 0 | 0 | UNS.WORD | Immediately | |
| HW:P2 840D | - | - | 7 | UNS.WORD | Immediately | |

| 1636 | RETRACT_AND_GENERATOR_MODE | | | | | CR: / DE1 / | |
|---|---|---|---|---|---|---|---|
| EXP | Operating mode emergency retraction/gen. operation (not 810D) | | | FDD/MSD | ROT/LIN | 2/4 | 840D |
| - | 0 | 0 | 7 | UNS. WORD | | immediately | |

| 1637 | GEN_STOP_DELAY | | | | CR: DE1 | |
|---|---|---|---|---|---|---|
| EXP<br>ms | Delay time for regenerative braking | | | MSD SLM FDD | 2/4 | |
| HW:P2 | 0 | 0 | 10000 | UNS.WORD | Immediately | |

| 1637 | GEN_STOP_DELAY | | | | | CR: / DE1 / | |
|---|---|---|---|---|---|---|---|
| EXP | Delay time for regenerative braking (not 810D) | | | FDD/MSD | ROT/LIN | 2/4 | 840D |
| ms | 0 | 0 | 10000 | UNS. WORD | | immediately | |

| 1638 | RETRACT_TIME | | | | CR: DE1 | |
|---|---|---|---|---|---|---|
| EXP<br>ms | Emergency retraction time | | | MSD SLM FDD | 2/4 | |
| HW:P2 | 0 | 0 | 10000 | UNS.WORD | Immediately | |

| 1638 | RETRACT_TIME | | | | | CR: / DE1 / | |
|---|---|---|---|---|---|---|---|
| EXP | Emergency retraction time (not 810D) | | | FDD/MSD | ROT/LIN | 2/4 | 840D |
| ms | 0 | 0 | 10000 | UNS. WORD | | immediately | |

| 1639 | RETRACT_SPEED | | | | CR: DE1, DL1 | |
|---|---|---|---|---|---|---|
| EXP<br>- | Emergency retraction speed | | | MSD SLM FDD | 2/4 | |
| HW:P2 | 0 | -4194304 | 4194304 | DWORD | Immediately | |

| 1639 | RETRACT_SPEED | | | | | CR: /DE1 / | |
|---|---|---|---|---|---|---|---|
| EXP | Emergency retraction speed (not 810D) | | | FDD/MSD | ROT | 2/4 | 840D |
| - | 0 | -4194304 | 4194304 | DWORD | | immediately | |

| 1639 | RETRACT_SPEED | | | | | CR: / DL1/ | |
|---|---|---|---|---|---|---|---|
| EXP | Emergency retraction speed (not 810D) | | | FDD | LIN | 2/4 | 840D |
| - | 0 | -4194304 | 4194304 | DWORD | | immediately | |

| 1650 | DIAGNOSIS_CONTROL_FLAGS | | | | CR: DD1, DE1 | |
|---|---|---|---|---|---|---|
| D04<br>- | Diagnostic control | | | MSD SLM FDD | 2/4 | |
| HW:P2 | 0x0000 | 0x0000 | 0xffff | UNS.WORD | Immediately | |

© Siemens AG 2004 All Rights Reserved

| 1650 | DIAGNOSIS_CONTROL_FLAGS | | | | | CR: / DD1, DE1 / | |
|---|---|---|---|---|---|---|---|
| D04, EXP | Diagnostic control (not 810D) | | | FDD/MSD | ROT/LIN | 2/4 | 840D |
| - | 0 | 0 | ffff | UNS. WORD | | immediately | |

| 1651 | MINMAX_SIGNAL_NR | | | | CR: DD1 |
|---|---|---|---|---|---|
| D04<br>- | Signal number min./max. memory | | | MSD SLM FDD | 2/4 |
| HW:P2 | 0 | 0 | 100 | UNS.WORD | Immediately |

| 1651 | MINMAX_SIGNAL_NR | | | | | CR: / DD1 / | |
|---|---|---|---|---|---|---|---|
| D04, EXP | Signal number min./max. memory (not 810D) | | | FDD/MSD | ROT/LIN | 2/4 | 840D |
| - | 0 | 0 | 100 | UNS. WORD | | immediately | |

| 1652 | MINMAX_ADDRESS | | | | CR: DD1 |
|---|---|---|---|---|---|
| D04<br>- | Memory cell, min./max. memory | | | MSD SLM FDD | 2/4 |
| HW:P2 | 0 | 0 | 65535 | UNS.WORD | Immediately |

| 1652 | MINMAX_ADDRESS | | | | | CR: / DD1 / | |
|---|---|---|---|---|---|---|---|
| D04, EXP | Memory cell, min./max. memory (not 810D) | | | FDD/MSD | ROT/LIN | 2/4 | 840D |
| - | 0 | 0 | 65535 | UNS. WORD | | immediately | |

| 1653 | MINMAX_MIN_VALUE | | | | CR: DD1 |
|---|---|---|---|---|---|
| D04<br>- | Minimum value, min./max. memory | | | MSD SLM FDD | 2/4 |
| HW:P2 | 0 | 0 | 16777215 | UNS.DWORD | Immediately |

| 1653 | MINMAX_MIN_VALUE | | | | | CR: / DD1 / | |
|---|---|---|---|---|---|---|---|
| D04, EXP | Minimum value, min./max. memory (not 810D) | | | FDD/MSD | ROT/LIN | 2/4 | 840D |
| - | 0 | 0 | 16777215 | UNS. DWORD | | immediately | |

| 1654 | MINMAX_MAX_VALUE | | | | CR: DD1 |
|---|---|---|---|---|---|
| D04<br>- | Maximum value, min./max. memory | | | MSD SLM FDD | 2/4 |
| HW:P2 | 0 | 0 | 16777215 | UNS.DWORD | Immediately |

| 1654 | MINMAX_MAX_VALUE | | | | | CR: / DD1 / | |
|---|---|---|---|---|---|---|---|
| D04, EXP | Maximum value, min./max. memory (not 810D) | | | FDD/MSD | ROT/LIN | 2/4 | 840D |
| - | 0 | 0 | 16777215 | UNS. DWORD | | immediately | |

| 1655 | MONITOR_SEGMENT | | | | CR: DD1 |
|---|---|---|---|---|---|
| D04<br>- | Segment of memory cell for monitor | | | MSD SLM FDD | 2/4 |
| HW:P2 | 0 | 0 | 1 | UNS.WORD | Immediately |

| 1655 | MONITOR_SEGMENT | | | | | CR: / DD1 / | |
|---|---|---|---|---|---|---|---|
| D04, EXP | Segment of memory cell for monitor | | | FDD/MSD | ROT/LIN | 2/4 | |
| - | 0 | 0 | 1 | UNS. WORD | | immediately | |

| 1656 | MONITOR_ADDRESS | | | | CR: DD1 |
|---|---|---|---|---|---|
| D04<br>- | Address of memory cell for monitor | | | MSD SLM FDD | 2/4 |
| HW:P2 | 0 | 0 | 0x00FFFFFF | UNS.DWORD | Immediately |

| 1656 | MONITOR_ADDRESS | | | | | CR: / DD1 / | |
|---|---|---|---|---|---|---|---|
| D04, EXP | Address of memory cell for monitor | | | FDD/MSD | ROT/LIN | 2/4 | |
| - | 0 | 0 | 65535 | UNS. WORD | | immediately | |

| 1657 | MONITOR_DISPLAY | | | | CR: DD1 |
|---|---|---|---|---|---|
| D04<br>- | Display monitor value | | | MSD SLM FDD | 2/4 |
| HW:P2 | 0 | 0 | 0x00FFFFFF | UNS.DWORD | Immediately |

© Siemens AG 2004 All Rights Reserved

| 1657 | MONITOR_DISPLAY | | | | | CR: / DD1 / | |
|---|---|---|---|---|---|---|---|
| D04, EXP | Display monitor value | | | FDD/MSD | ROT/LIN | 2/4 | |
| - | 0 | 0 | 16777215 | UNS. DWORD | | immediately | |

| 1658 | MONITOR_INPUT_VALUE | | | | CR: DD1 | |
|---|---|---|---|---|---|---|
| D04<br>- | Entry of monitor value | | | MSD SLM FDD | 2/4 | |
| HW:P2 | 0 | 0 | 16777215 | UNS.DWORD | Immediately | |

| 1658 | MONITOR_INPUT_VALUE | | | | | CR: / DD1 / | |
|---|---|---|---|---|---|---|---|
| D04, EXP | Entry of monitor value | | | FDD/MSD | ROT/LIN | 2/4 | |
| - | 0 | 0 | 16777215 | UNS. DWORD | | immediately | |

| 1659 | MONITOR_INPUT_STROBE | | | | CR: DD1 | |
|---|---|---|---|---|---|---|
| D04<br>- | Transference of monitor value | | | MSD SLM FDD | 2/4 | |
| HW:P2 | 0 | 0 | 1 | UNS.WORD | Immediately | |

| 1659 | MONITOR_INPUT_STROBE | | | | | CR: / DD1 / | |
|---|---|---|---|---|---|---|---|
| D04, EXP | Transference of monitor value | | | FDD/MSD | ROT/LIN | 2/4 | |
| - | 0 | 0 | 1 | UNS. WORD | | immediately | |

| 1660 | UF_MODE_FREQUENCY | | | | CR: DE1 | |
|---|---|---|---|---|---|---|
| EXP<br>Hz | Motor frequency V/f mode | | | MSD SLM FDD | 0/0 | |
| HW:P2 | 0.000000 | -10000.000000 | 10000.000000 | FLOAT | Immediately | |

| 1660 | UF_MODE_FREQUENCY | | | | | CR: / DE1 / | |
|---|---|---|---|---|---|---|---|
| EXP | Motor frequency V/f mode (not 810D) | | | FDD/MSD | ROT/LIN | 0/0 | 840D |
| Hz | 0.0000 | -10000.0000 | 10000.0000 | FLOAT | | immediately | |

| 1661 | UF_MODE_RATIO | | | | CR: DE1 | |
|---|---|---|---|---|---|---|
| EXP<br>Vs | V/f ratio in V/f mode | | | MSD SLM FDD | 0/0 | |
| HW:P2 | 2.400000 | 0.000000 | 100.000000 | FLOAT | Immediately | |

| 1661 | UF_MODE_RATIO | | | | | CR: / DE1 / | |
|---|---|---|---|---|---|---|---|
| EXP | V/f ratio in V/f mode (not 810D) | | | FDD/MSD | ROT/LIN | 0/0 | 840D |
| Vs | 2.4000 | 0.0000 | 100.0000 | FLOAT | | immediately | |

| 1662 | UF_MODE_DELTA_FREQUENCY | | | | CR: DE1 | |
|---|---|---|---|---|---|---|
| EXP<br>Hz/s | Changing the motor frequency of V/f operation | | | MSD SLM FDD | 0/0 | |
| HW:P2 | 5.000000 | 0.000000 | 10000.000000 | FLOAT | Immediately | |

| 1662 | UF_MODE_DELTA_FREQUENCY | | | | | CR: / DE1 / | |
|---|---|---|---|---|---|---|---|
| EXP | Changing the motor frequency of V/f operation (not 810D) | | | FDD/MSD | ROT/LIN | 0/0 | 840D |
| Hz/s | 5.0000 | 0.0000 | 10000.0000 | FLOAT | | immediately | |

| 1665 | IPO_SPEEDCTRL_DELAY_FACTOR | | | | CR: IAD | |
|---|---|---|---|---|---|---|
| EXP<br>- | Run-time factor IPO/SC cycles f. RFG | | | MSD SLM FDD | 0/0 | |
| HW:P2 | 2.000000 | 0.000000 | 20.000000 | FLOAT | Immediately | |

| 1665 | IPO_SPEEDCTRL_DELAY_FACTOR | | | | | CR: / IAD / | |
|---|---|---|---|---|---|---|---|
| EXP | Run-time factor IPO/SC cycles f. RFG (not 810D) | | | FDD/MSD | ROT/LIN | 0/0 | 840D |
| - | 2.0000 | 0.0000 | 20.0000 | FLOAT | | immediately | |

© Siemens AG 2004 All Rights Reserved

| 1700 | TERMINAL_STATE | | | | CR: DD1 | |
|---|---|---|---|---|---|---|
| D04<br>- | Status of binary inputs | | | MSD SLM FDD | 2/4 | |
| HW:P2 | 0x0000 | 0x0000 | 0xffff | UNS.WORD | Immediately | |

| 1700 | TERMINAL_STATE | | | | | CR: / DD1/ | |
|---|---|---|---|---|---|---|---|
| | Status of binary inputs | | | FDD/MSD | | 2/4 | 810D |
| - | 0 | 0 | 7fff | UNS. WORD | | immediately | |

| 1700 | TERMINAL_STATE | | | | | CR: / DD1 / | |
|---|---|---|---|---|---|---|---|
| D04 | Status of binary inputs | | | FDD/MSD | ROT/LIN | 2/4 | 840D |
| - | 0 | 0 | ffff | UNS. WORD | | immediately | |

| 1701 | LINK_VOLTAGE | | | | CR: DD1 | |
|---|---|---|---|---|---|---|
| D04<br>V | DC link voltage | | | MSD SLM FDD | 2/4 | |
| HW:P2 | 0 | 0 | 65535 | UNS.WORD | Immediately | |

| 1701 | LINK_VOLTAGE | | | | | CR: / DD1/ | |
|---|---|---|---|---|---|---|---|
| | DC link voltage | | | FDD/MSD | | 2/4 | 810D |
| V | 0 | 0 | 32767 | UNS. WORD | | immediately | |

| 1701 | LINK_VOLTAGE | | | | | CR: / DD1 / | |
|---|---|---|---|---|---|---|---|
| D04 | DC link voltage | | | FDD/MSD | ROT/LIN | 2/4 | 840D |
| V | 0 | 0 | 65535 | UNS. WORD | | immediately | |

| 1702 | MOTOR_TEMPERATURE | | | | CR: DD1 | |
|---|---|---|---|---|---|---|
| D04<br>C | Motor temperature | | | MSD SLM FDD | 2/4 | |
| HW:P2 | 0 | 0 | 32767 | WORD | Immediately | |

| 1702 | MOTOR_TEMPERATURE | | | | | CR: / DD1 / | |
|---|---|---|---|---|---|---|---|
| D04 | Motor temperature | | | FDD/MSD | ROT/LIN | 2/4 | |
| | 0 | 0 | 32767 | WORD | | immediately | |

| 1703 | LEAD_TIME_MOTOR_ENC | | | | CR: DD1 | |
|---|---|---|---|---|---|---|
| EXP<br>µs | Leadtime for motor measuring system converter | | | MSD SLM FDD | 2/4 | |
| HW:P2 | 0 | 0 | 65535 | UNS.WORD | Immediately | |

| 1703 | LEAD_TIME_MOTOR_ENC | | | | | CR: / DD1/ | |
|---|---|---|---|---|---|---|---|
| | Leadtime for motor measuring system converter | | | FDD/MSD | | 2/4 | 810D |
| us | 0 | 0 | 32767 | UNS. WORD | | immediately | |

| 1703 | LEAD_TIME_MOTOR_ENC | | | | | CR: / DD1 / | |
|---|---|---|---|---|---|---|---|
| EXP | Leadtime for motor measuring system converter | | | FDD/MSD | ROT/LIN | 2/4 | 840D |
| us | 0 | 0 | 65535 | UNS. WORD | | immediately | |

| 1704 | LEAD_TIME_DIRECT_ENC | | | | CR: DD1 | |
|---|---|---|---|---|---|---|
| EXP<br>µs | Leadtime for direct measuring system converter | | | MSD SLM FDD | 2/4 | |
| HW:P2 | 0 | 0 | 65535 | UNS.WORD | Immediately | |

| 1704 | LEAD_TIME_DIRECT_ENC | | | | | CR: / DD1/ | |
|---|---|---|---|---|---|---|---|
| | Leadtime for direct measuring system converter | | | FDD/MSD | | 2/4 | 810D |
| us | 0 | 0 | 32767 | UNS. WORD | | immediately | |

| 1704 | LEAD_TIME_DIRECT_ENC | | | | | CR: / DD1 / | |
|---|---|---|---|---|---|---|---|
| EXP | Leadtime for direct measuring system converter | | | FDD/MSD | ROT/LIN | 2/4 | 840D |
| us | 0 | 0 | 65535 | UNS. WORD | | immediately | |

© Siemens AG 2004 All Rights Reserved

| 1705 | DESIRED_VOLTAGE | | | | | CR: DD1 | |
|---|---|---|---|---|---|---|---|
| D04<br>V | Voltage setpoint (rms) | | | MSD SLM FDD | | 2/4 | |
| HW:P2 | 0.000000 | -100000.000000 | 100000.000000 | FLOAT | | Immediately | |

| 1705 | DESIRED_VOLTAGE | | | | | CR: / DD1 / | |
|---|---|---|---|---|---|---|---|
| D04 | Voltage setpoint (rms) (not 810D) | | | FDD/MSD | ROT/LIN | 2/4 | 840D |
| V | 0.0000 | -100000.0000 | 100000.0000 | FLOAT | | immediately | |

| 1706 | DESIRED_SPEED | | | | | CR: DD1, DL1 | |
|---|---|---|---|---|---|---|---|
| D04<br>ROT: 1/min<br>LIN: m/min | Speed setpoint | | | MSD SLM FDD | | 2/4 | |
| HW:P2 | 0.000000 | -100000.000000 | 100000.000000 | FLOAT | | Immediately | |

| 1706 | DESIRED_SPEED | | | | | CR: / DD1/ | |
|---|---|---|---|---|---|---|---|
| | Speed setpoint | | | FDD/MSD | | 2/4 | 810D |
| 1/min | 0.0000 | 0.0000 | 32767.0000 | FLOAT | | immediately | |

| 1706 | DESIRED_SPEED | | | | | CR: / DL1/ | |
|---|---|---|---|---|---|---|---|
| D04 | Speed setpoint | | | FDD | LIN | 2/4 | 840D |
| m/min | 0.0000 | -100000.0000 | 100000.0000 | FLOAT | | immediately | |

| 1706 | DESIRED_SPEED | | | | | CR: /DD1 / | |
|---|---|---|---|---|---|---|---|
| D04 | Speed setpoint | | | FDD/MSD | ROT | 2/4 | 840D |
| 1/min | 0.0000 | -100000.0000 | 100000.0000 | FLOAT | | immediately | |

| 1707 | ACTUAL_SPEED | | | | | CR: DD1, DL1 | |
|---|---|---|---|---|---|---|---|
| D04<br>ROT: 1/min<br>LIN: m/min | Actual speed value | | | MSD SLM FDD | | 2/4 | |
| HW:P2 | 0.000000 | -100000.000000 | 100000.000000 | FLOAT | | Immediately | |

| 1707 | ACTUAL_SPEED | | | | | CR: / DD1/ | |
|---|---|---|---|---|---|---|---|
| | Actual speed value | | | FDD/MSD | | 2/4 | 810D |
| 1/min | 0.0000 | 0.0000 | 32767.0000 | FLOAT | | immediately | |

| 1707 | ACTUAL_SPEED | | | | | CR: /DD1 / | |
|---|---|---|---|---|---|---|---|
| D04 | Actual speed value | | | FDD/MSD | ROT | 2/4 | 840D |
| 1/min | 0.0000 | -100000.0000 | 100000.0000 | FLOAT | | immediately | |

| 1707 | ACTUAL_SPEED | | | | | CR: / DL1/ | |
|---|---|---|---|---|---|---|---|
| D04 | Speed actual value | | | FDD | LIN | 2/4 | 840D |
| m/min | 0.0000 | -100000.0000 | 100000.0000 | FLOAT | | immediately | |

| 1708 | ACTUAL_CURRENT | | | | | CR: DD1 | |
|---|---|---|---|---|---|---|---|
| D04<br>% | Smoothed actual current value | | | MSD SLM FDD | | 2/4 | |
| HW:P2 | 0.000000 | -100000.000000 | 100000.000000 | FLOAT | | Immediately | |

| 1708 | ACTUAL_CURRENT | | | | | CR: / DD1/ | |
|---|---|---|---|---|---|---|---|
| | Smoothed actual current value | | | FDD/MSD | | 2/4 | 810D |
| % | 0.0000 | 0.0000 | 32767.0000 | FLOAT | | immediately | |

| 1708 | ACTUAL_CURRENT | | | | | CR: / DD1 / | |
|---|---|---|---|---|---|---|---|
| D04 | Smoothed actual current value | | | FDD/MSD | ROT/LIN | 2/4 | 840D |
| % | 0.0000 | -100000.0000 | 100000.0000 | FLOAT | | immediately | |

| 1709 | VOLTAGE_LSB | | | | | CR: DD1 | |
|---|---|---|---|---|---|---|---|
| EXP<br>- | Significance of voltage representation | | | MSD SLM FDD | | 2/4 | |
| HW:P2 | 0.000000 | -100000.000000 | 100000.000000 | FLOAT | | Immediately | |

© Siemens AG 2004 All Rights Reserved

| 1709 | VOLTAGE_LSB | | | | | CR: / DD1/ | |
|---|---|---|---|---|---|---|---|
| | Significance of voltage representation | | | FDD/MSD | | 2/4 | 810D |
| - | 0.0000 | 0.0000 | 32767.0000 | FLOAT | | immediately | |

| 1709 | VOLTAGE_LSB | | | | | CR: / DD1 / | |
|---|---|---|---|---|---|---|---|
| EXP | Significance of voltage representation | | | FDD/MSD | ROT/LIN | 2/4 | 840D |
| - | 0.0000 | -100000.0000 | 100000.0000 | FLOAT | | immediately | |

| 1710 | CURRENT_LSB | | | | | CR: DD1 | |
|---|---|---|---|---|---|---|---|
| EXP<br>µA | Significance of current representation | | | MSD SLM FDD | | 2/4 | |
| HW:P2 | 0.000000 | -100000.000000 | 100000.000000 | FLOAT | | Immediately | |

| 1710 | CURRENT_LSB | | | | | CR: / DD1/ | |
|---|---|---|---|---|---|---|---|
| | Significance of current representation | | | FDD/MSD | | 2/4 | 810D |
| uA | 0.0000 | 0.0000 | 32767.0000 | FLOAT | | immediately | |

| 1710 | CURRENT_LSB | | | | | CR: / DD1 / | |
|---|---|---|---|---|---|---|---|
| EXP | Significance of current representation | | | FDD/MSD | ROT/LIN | 2/4 | 840D |
| uA | 0.0000 | -100000.0000 | 100000.0000 | FLOAT | | immediately | |

| 1711 | SPEED_LSB | | | | | CR: DD1, DL1 | |
|---|---|---|---|---|---|---|---|
| EXP<br>ROT: 1/min<br>LIN: m/min | Significance of the speed representation | | | MSD SLM FDD | | 2/4 | |
| HW:P2 | 0.000000 | -100000.000000 | 100000.000000 | FLOAT | | Immediately | |

| 1711 | SPEED_LSB | | | | | CR: / DD1/ | |
|---|---|---|---|---|---|---|---|
| | Significance of the speed representation | | | FDD/MSD | | 2/4 | 810D |
| 1/min | 0.0000 | 0.0000 | 32767.0000 | FLOAT | | immediately | |

| 1711 | SPEED_LSB | | | | | CR: / DL1/ | |
|---|---|---|---|---|---|---|---|
| EXP | Significance of the speed representation | | | FDD | LIN | 2/4 | 840D |
| m/min | 0.0000 | -100000.0000 | 100000.0000 | FLOAT | | immediately | |

| 1711 | SPEED_LSB | | | | | CR: /DD1 / | |
|---|---|---|---|---|---|---|---|
| EXP | Significance of the speed representation | | | FDD/MSD | ROT | 2/4 | 840D |
| 1/min | 0.0000 | -100000.0000 | 100000.0000 | FLOAT | | immediately | |

| 1712 | ROTOR_FLUX_LSB | | | | | CR: DD1 | |
|---|---|---|---|---|---|---|---|
| EXP<br>µVs | Significance of the rotor flux representation | | | MSD SLM FDD | | 2/4 | |
| HW:P2 | 0.000000 | -100000.000000 | 100000.000000 | FLOAT | | Immediately | |

| 1712 | ROTOR_FLUX_LSB | | | | | CR: / DD1/ | |
|---|---|---|---|---|---|---|---|
| | Significance of the rotor flux representation | | | FDD/MSD | | 2/4 | 810D |
| uVs | 0.0000 | 0.0000 | 32767.0000 | FLOAT | | immediately | |

| 1712 | ROTOR_FLUX_LSB | | | | | CR: / DD1 / | |
|---|---|---|---|---|---|---|---|
| EXP | Significance of the rotor flux representation | | | FDD/MSD | ROT/LIN | 2/4 | 840D |
| uVs | 0.0000 | -100000.0000 | 100000.0000 | FLOAT | | immediately | |

© Siemens AG 2004 All Rights Reserved

| 1713 | ROT: TORQUE_LSB<br>LIN: FORCE_LSB | | | | CR: DD1, DL1 | |
|---|---|---|---|---|---|---|
| EXP<br>ROT: µNm<br>LIN: µN | ROT: Significance of the torque representation<br>LIN: Significance of the force representation | | | MSD SLM FDD | 2/4 | |
| HW:P2 | 0.000000 | ROT: -100000.000000<br>LIN: -1000000.000000 | ROT: 100000.000000<br>LIN: 1000000.000000 | FLOAT | Immediately | |

| 1713 | TORQUE_LSB | | | | | CR: / DD1/ | |
|---|---|---|---|---|---|---|---|
| | Significance of the torque representation | | | FDD/MSD | | 2/4 | 810D |
| uNm | 0.0000 | 0.0000 | 32767.0000 | FLOAT | | immediately | |

| 1713 | FORCE_LSB | | | | | CR: / DL1/ | |
|---|---|---|---|---|---|---|---|
| EXP | Significance of the force representation | | | FDD | LIN | 2/4 | 840D |
| uN | 0.0000 | -1000000.0000 | 1000000.0000 | FLOAT | | immediately | |

| 1713 | TORQUE_LSB | | | | | CR: /DD1 / | |
|---|---|---|---|---|---|---|---|
| EXP | Significance of the torque representation | | | FDD/MSD | ROT | 2/4 | 840D |
| uNm | 0.0000 | -100000.0000 | 100000.0000 | FLOAT | | immediately | |

| 1714 | ROTOR_POS_LSB | | | | CR: DD1 | |
|---|---|---|---|---|---|---|
| EXP<br>Degrees | Significance of rotor position representation | | | MSD SLM FDD | 2/4 | |
| HW:P2 | 0.000000 | -100000.000000 | 100000.000000 | FLOAT | Immediately | |

| 1714 | ROTOR_POS_LSB | | | | | CR: / DD1/ | |
|---|---|---|---|---|---|---|---|
| | Significance of rotor position representation | | | FDD/MSD | | 2/4 | 810D |
| ø | 0.0000 | 0.0000 | 32767.0000 | FLOAT | | immediately | |

| 1714 | ROTOR_POS_LSB | | | | | CR: / DD1 / | |
|---|---|---|---|---|---|---|---|
| EXP | Significance of rotor position representation | | | FDD/MSD | ROT/LIN | 2/4 | 840D |
| degrees | 0.0000 | -100000.0000 | 100000.0000 | FLOAT | | immediately | |

| 1719 | ABS_ACTUAL_CURRENT | | | | CR: DD1 | |
|---|---|---|---|---|---|---|
| D04<br>A | Absolute current setpoint value (rms) | | | MSD SLM FDD | 2/4 | |
| HW:P2 | 0.000000 | -100000.000000 | 100000.000000 | FLOAT | Immediately | |

| 1719 | ABS_ACTUAL_CURRENT | | | | | CR: / DD1 / | |
|---|---|---|---|---|---|---|---|
| D04 | Absolute current setpoint value (rms) (not 810D) | | | FDD/MSD | ROT/LIN | 2/4 | 840D |
| A | 0.0000 | -100000.0000 | 100000.0000 | FLOAT | | immediately | |

| 1720 | CRC_DIAGNOSIS | | | | CR: DD1 | |
|---|---|---|---|---|---|---|
| D04<br>- | CRC diagnostic parameter | | | MSD SLM FDD | 2/4 | |
| HW:P2 | 0 | 0 | 65535 | UNS.WORD | Immediately | |

| 1720 | CRC_DIAGNOSIS | | | | | CR: / DD1/ | |
|---|---|---|---|---|---|---|---|
| | CRC diagnostic parameter | | | FDD/MSD | | 2/4 | 810D |
| - | 0 | 0 | 32767 | UNS. WORD | | immediately | |

| 1720 | CRC_DIAGNOSIS | | | | | CR: / DD1 / | |
|---|---|---|---|---|---|---|---|
| D04, EXP | CRC diagnostic parameter | | | FDD/MSD | ROT/LIN | 2/4 | 840D |
| - | 0 | 0 | 65535 | UNS. WORD | | immediately | |

© Siemens AG 2004 All Rights Reserved

| 1721 | ACCEL_DIAGNOSIS | | | | CR: DD1 | |
|---|---|---|---|---|---|---|
| D04<br>- | Diagnostics, actual speed value | | | MSD SLM FDD | 2/4 | |
| HW:P2 | 0 | 0 | 65535 | UNS.WORD | Immediately | |

| 1721 | ACCEL_DIAGNOSIS | | | | | CR: / DD1/ | |
|---|---|---|---|---|---|---|---|
| | Diagnostics, actual speed value | | | FDD/MSD | | 2/4 | 810D |
| - | 0 | 0 | 32767 | UNS. WORD | | immediately | |

| 1721 | ACCEL_DIAGNOSIS | | | | | CR: / DD1 / | |
|---|---|---|---|---|---|---|---|
| D04, EXP | Diagnostics, actual speed value | | | FDD/MSD | ROT/LIN | 2/4 | 840D |
| - | 0 | 0 | 65535 | UNS. WORD | | immediately | |

| 1722 | LOAD | | | | CR: DD1 | |
|---|---|---|---|---|---|---|
| D04<br>% | Utilization | | | MSD SLM FDD | 2/4 | |
| HW:P2 | 0.000000 | -100000.000000 | 100000.000000 | FLOAT | Immediately | |

| 1722 | LOAD | | | | | CR: / DD1/ | |
|---|---|---|---|---|---|---|---|
| | Utilization | | | FDD/MSD | | 2/4 | 810D |
| % | 0.0000 | 0.0000 | 32767.0000 | FLOAT | | immediately | |

| 1722 | LOAD | | | | | CR: / DD1 / | |
|---|---|---|---|---|---|---|---|
| D04 | Utilization | | | FDD/MSD | ROT/LIN | 2/4 | 840D |
| % | 0.0000 | -100000.0000 | 100000.0000 | FLOAT | | immediately | |

| 1723 | ACTUAL_RAMP_TIME | | | | CR: DD1 | |
|---|---|---|---|---|---|---|
| EXP<br>ms | Diagnostics, ramp-up time | | | MSD SLM FDD | 2/4 | |
| HW:P2 | 0 | 0 | 65535 | UNS.WORD | Immediately | |

| 1723 | ACTUAL_RAMP_TIME | | | | | CR: / DD1/ | |
|---|---|---|---|---|---|---|---|
| | Diagnostics, ramp-up time | | | FDD/MSD | | 2/4 | 810D |
| ms | 0 | 0 | 32767 | UNS. WORD | | immediately | |

| 1723 | ACTUAL_RAMP_TIME | | | | | CR: / DD1 / | |
|---|---|---|---|---|---|---|---|
| EXP | Diagnostics, ramp-up time | | | FDD/MSD | ROT/LIN | 2/4 | 840D |
| ms | 0 | 0 | 65535 | UNS. WORD | | immediately | |

| 1724 | SMOOTH_RUN_DIAGNOSIS | | | | CR: DD1 | |
|---|---|---|---|---|---|---|
| EXP<br>- | Diagnostics, smooth running monitoring | | | MSD SLM FDD | 2/4 | |
| HW:P2 | 0 | 0 | 65535 | UNS.WORD | Immediately | |

| 1724 | SMOOTH_RUN_DIAGNOSIS | | | | | CR: / DD1/ | |
|---|---|---|---|---|---|---|---|
| | Diagnostics, smooth running monitoring | | | FDD/MSD | | 2/4 | 810D |
| - | 0 | 0 | 32767 | UNS. WORD | | immediately | |

| 1724 | SMOOTH_RUN_DIAGNOSIS | | | | | CR: / DD1 / | |
|---|---|---|---|---|---|---|---|
| EXP | Diagnostics, smooth running monitoring | | | FDD/MSD | ROT/LIN | 2/4 | 840D |
| - | 0 | 0 | 65535 | UNS. WORD | | immediately | |

© Siemens AG 2004 All Rights Reserved

| 1725 | ROT: MAX_TORQUE_FROM_NC<br>LIN: MAX_FORCE_FROM_NC | | | | CR: DD1, DL1 | |
|---|---|---|---|---|---|---|
| EXP<br>ROT: Nm<br>LIN: N | ROT: Standardising the torque setpoint average<br>LIN: Rating force setpoint interface | | | MSD SLM FDD | 2/4 | |
| HW:P2 | 0.000000 | ROT: -100000.000000<br>LIN: -1000000.000000 | ROT: 100000.000000<br>LIN: 1000000.000000 | FLOAT | Immediately | |

| 1725 | MAX_TORQUE_FROM_NC | | | | | CR: / DD1/ | |
|---|---|---|---|---|---|---|---|
| | Standardising the torque setpoint average | | | FDD/MSD | | 2/4 | 810D |
| Nm | 0.0000 | 0.0000 | 32767.0000 | FLOAT | | immediately | |

| 1725 | MAX_TORQUE_FROM_NC | | | | | CR: /DD1 / | |
|---|---|---|---|---|---|---|---|
| EXP | Standardising the torque setpoint average | | | FDD/MSD | ROT | 2/4 | 840D |
| Nm | 0.0000 | -100000.0000 | 100000.0000 | FLOAT | | immediately | |

| 1725 | MAX_FORCE_FROM_NC | | | | | CR: / DL1/ | |
|---|---|---|---|---|---|---|---|
| EXP | Rating force setpoint interface | | | FDD | LIN | 2/4 | 840D |
| N | 0.0000 | -1000000.0000 | 1000000.0000 | FLOAT | | immediately | |

| 1728 | DESIRED_TORQUE | | | | CR: F1 | |
|---|---|---|---|---|---|---|
| D04<br>% | Torque setpoint | | | MSD SLM FDD | 2/4 | |
| HW:P2 | 0.000000 | -100000.000000 | 100000.000000 | FLOAT | Immediately | |

| 1728 | DESIRED_TORQUE | | | | | CR: / F1 / | |
|---|---|---|---|---|---|---|---|
| D04 | Torque setpoint (not 810D) | | | FDD/MSD | ROT/LIN | 2/4 | 840D |
| % | 0.0000 | -100000.0000 | 100000.0000 | FLOAT | | immediately | |

| 1729 | ACTUAL_ELECTRIC_ROTORPOS | | | | CR: FBU, POS3 | |
|---|---|---|---|---|---|---|
| D04<br>Degrees | Current rotor position (electr.) | | | MSD SLM FDD | 2/4 | |
| HW:P2 | 0.000000 | -100000.000000 | 100000.000000 | FLOAT | Immediately | |

| 1729 | ACTUAL_ELECTRIC_ROTORPOS | | | | | CR: / FBU, POS3 / | |
|---|---|---|---|---|---|---|---|
| D04 | Current rotor position (electr.) (not 810D) | | | FDD/MSD | ROT/LIN | 2/4 | 840D |
| degrees | 0.0000 | -100000.0000 | 100000.0000 | FLOAT | | immediately | |

| 1730 | OPERATING_MODE | | | | CR: DD1 | |
|---|---|---|---|---|---|---|
| D04<br>- | Operating mode display | | | MSD SLM FDD | 2/4 | |
| HW:P2 | 1 | 1 | 65535 | UNS.WORD | Immediately | |

| 1730 | OPERATING_MODE | | | | | CR: / DD1/ | |
|---|---|---|---|---|---|---|---|
| | Operating mode display | | | FDD/MSD | | 2/4 | 810D |
| - | 0 | 0 | 32767 | UNS. WORD | | immediately | |

| 1730 | OPERATING_MODE | | | | | CR: / DD1 / | |
|---|---|---|---|---|---|---|---|
| D04 | Operating mode display | | | FDD/MSD | ROT/LIN | 2/4 | 840D |
| - | 1 | 1 | 65535 | UNS. WORD | | immediately | |

| 1731 | CL1_PO_IMAGE | | | | CR: DB1 | |
|---|---|---|---|---|---|---|
| D04<br>- | Image ZK1_PO register | | | MSD SLM FDD | 2/4 | |
| HW:P2 | 0 | 0 | 65535 | UNS.WORD | Immediately | |

© Siemens AG 2004 All Rights Reserved

| 1731 | CL1_PO_IMAGE | | | | CR: / DB1/ | |
|---|---|---|---|---|---|---|
| | Image ZK1_PO register | | | FDD/MSD | 2/4 | 810D |
| - | 0 | 0 | 32767 | UNS. WORD | immediately | |

| 1731 | CL1_PO_IMAGE | | | | CR: / DB1 / | |
|---|---|---|---|---|---|---|
| D04, EXP | Image ZK1_PO register | | | FDD/MSD ROT/LIN | 2/4 | 840D |
| - | 0 | 0 | 65535 | UNS. WORD | immediately | |

| 1732 | CL1_RES_IMAGE | | | | CR: DB1 | |
|---|---|---|---|---|---|---|
| D04<br>- | Image ZK1_RES register | | | MSD SLM FDD | 2/4 | |
| HW:P2 | 0 | 0 | 65535 | UNS.WORD | Immediately | |

| 1732 | CL1_RES_IMAGE | | | | CR: / DB1/ | |
|---|---|---|---|---|---|---|
| | Image ZK1_RES register | | | FDD/MSD | 2/4 | 810D |
| - | 0 | 0 | 32767 | UNS. WORD | immediately | |

| 1732 | CL1_RES_IMAGE | | | | CR: / DB1 / | |
|---|---|---|---|---|---|---|
| D04, EXP | Image ZK1_RES register | | | FDD/MSD ROT/LIN | 2/4 | 840D |
| - | 0 | 0 | 65535 | UNS. WORD | immediately | |

| 1733 | LPFC_DIAGNOSIS | | | | CR: DD1 | |
|---|---|---|---|---|---|---|
| EXP<br>- | NPFK diagnosis counter | | | MSD SLM FDD | 2/4 | |
| HW:P2 | 0 | 0 | 65535 | UNS.WORD | Immediately | |

| 1733 | LPFC_DIAGNOSIS | | | | CR: / DD1/ | |
|---|---|---|---|---|---|---|
| | NPFK diagnosis counter | | | FDD/MSD | 2/4 | 810D |
| - | 0 | 0 | 32767 | UNS. WORD | immediately | |

| 1733 | LPFC_DIAGNOSIS | | | | CR: / DD1 / | |
|---|---|---|---|---|---|---|
| EXP | NPFK diagnosis counter | | | FDD/MSD ROT/LIN | 2/4 | 840D |
| - | 0 | 0 | 65535 | UNS. WORD | immediately | |

| 1734 | DIAG_ROTORPOS_IDENT | | | | CR: DM1 | |
|---|---|---|---|---|---|---|
| -<br>- | Rotor position identification diagnosis | | | SLM FDD | 2/4 | |
| HW:P2 | 0 | -7 | 4 | WORD | Immediately | |

| 1734 | DIAG_ROTORPOS_IDENT | | | | CR: / DM1 / | |
|---|---|---|---|---|---|---|
| - | Rotor position identification diagnosis (not 810D) | | | FDD ROT/LIN | 2/4 | 840D |
| - | 0 | -7 | 3 | WORD | immediately | |

| 1735 | PROCESSOR_LOAD | | | | CR: DD1 | |
|---|---|---|---|---|---|---|
| -<br>% | Processor load | | | MSD SLM FDD | 2/4 | |
| HW:P2 | 0 | 0 | 65535 | UNS.WORD | Immediately | |

| 1735 | PROCESSOR_LOAD | | | | CR: / DD1 / | |
|---|---|---|---|---|---|---|
| - | Processor load (not 810D) | | | FDD/MSD ROT/LIN | 2/4 | 840D |
| % | 0 | 0 | 65535 | UNS. WORD | immediately | |

| 1736 | TEST_ROTORPOS_IDENT | | | | CR: DM1 | |
|---|---|---|---|---|---|---|
| D04<br>- | Rotor position identification | | | SLM FDD | 2/4 | |
| HW:P2 | 0 | 0 | 1 | UNS.WORD | Immediately | |

| 1736 | TEST_ROTORPOS_IDENT | | | | CR: / DM1 / | |
|---|---|---|---|---|---|---|
| D04 | Rotor position identification (not 810D) | | | FDD ROT/LIN | 2/4 | 840D |
| - | 0 | 0 | 1 | UNS. WORD | immediately | |

© Siemens AG 2004 All Rights Reserved

| 1737 | DIFF_ROTORPOS_IDENT | | | | CR: DM1 | |
|---|---|---|---|---|---|---|
| -<br>Degrees | Rotor position identification difference | | | SLM FDD | 2/4 | |
| HW:P2 | 0.000000 | -100000.000000 | 100000.000000 | FLOAT | Immediately | |

| 1737 | DIFF_ROTORPOS_IDENT | | | | | CR: / DM1 / | |
|---|---|---|---|---|---|---|---|
| - | Rotor position identification difference (not 810D) | | | FDD | ROT/LIN | 2/4 | 840D |
| degrees | 0.0000 | -100000.0000 | 100000.0000 | FLOAT | | immediately | |

| 1790 | ENC_TYPE_MOTOR | | | | CR: DG1 | |
|---|---|---|---|---|---|---|
| D04<br>- | Measuring circuit type, indirect measuring system | | | MSD SLM FDD | 2/4 | |
| HW:P2 | 0 | -1 | 32767 | WORD | Immediately | |

| 1790 | ENC_TYPE_MOTOR | | | | | CR: / DG1/ | |
|---|---|---|---|---|---|---|---|
| | Measuring circuit type, indirect measuring system | | | FDD/MSD | | 2/4 | 810D |
| - | 0 | 0 | 32767 | WORD | | immediately | |

| 1790 | ENC_TYPE_MOTOR | | | | | CR: / DG1 / | |
|---|---|---|---|---|---|---|---|
| D04, D06 | Measuring circuit type, indirect measuring system | | | FDD/MSD | ROT/LIN | 2/4 | 840D |
| - | 0 | -1 | 32767 | WORD | | immediately | |

| 1791 | ENC_TYPE_DIRECT | | | | CR: DG1 | |
|---|---|---|---|---|---|---|
| D04<br>- | Measuring circuit type, direct measuring system | | | MSD SLM FDD | 2/4 | |
| HW:P2 | 0 | -1 | 32767 | WORD | Immediately | |

| 1791 | ENC_TYPE_DIRECT | | | | | CR: / DG1/ | |
|---|---|---|---|---|---|---|---|
| | Measuring circuit type, direct measuring system | | | FDD/MSD | | 2/4 | 810D |
| - | 0 | 0 | 32767 | WORD | | immediately | |

| 1791 | ENC_TYPE_DIRECT | | | | | CR: / DG1 / | |
|---|---|---|---|---|---|---|---|
| D04, D06 | Measuring circuit type, direct measuring system | | | FDD/MSD | ROT/LIN | 2/4 | 840D |
| - | 0 | -1 | 32767 | WORD | | immediately | |

| 1796 | HW_VERSION | | | | CR: FBA | |
|---|---|---|---|---|---|---|
| D04<br>- | HW_VERSION | | | MSD SLM FDD | 2/4 | |
| HW:P2 | 0 | 0 | 65535 | UNS.WORD | Immediately | |

| 1796 | HW_VERSION | | | | | CR: / FBA / | |
|---|---|---|---|---|---|---|---|
| EXP | Hardware version (not 810D) | | | FDD/MSD | ROT/LIN | 2/4 | 840D |
| - | 0 | 0 | 65535 | UNS. WORD | | immediately | |

| 1797 | PBL_VERSION | | | | CR: DD1 | |
|---|---|---|---|---|---|---|
| EXP<br>- | Data version | | | MSD SLM FDD | 2/4 | |
| HW:P2 | 0 | 0 | 65535 | UNS.WORD | Immediately | |

| 1797 | PBL_VERSION | | | | | CR: / DD1/ | |
|---|---|---|---|---|---|---|---|
| | Data version | | | FDD/MSD | | 2/4 | 810D |
| - | 0 | 0 | 32767 | UNS. WORD | | immediately | |

| 1797 | PBL_VERSION | | | | | CR: / DD1 / | |
|---|---|---|---|---|---|---|---|
| EXP | Data version | | | FDD/MSD | ROT/LIN | 2/4 | 840D |
| - | 0 | 0 | 65535 | UNS. WORD | | immediately | |

| 1798 | FIRMWARE_DATE | | | | CR: DD1 | |
|---|---|---|---|---|---|---|
| D04<br>- | Firmware date | | | MSD SLM FDD | 2/4 | |
| HW:P2 | 0 | 0 | 65535 | UNS.WORD | Immediately | |

© Siemens AG 2004 All Rights Reserved

| 1798 | FIRMWARE_DATE | | | | | CR: / DD1/ | |
|---|---|---|---|---|---|---|---|
| | Firmware date | | | FDD/MSD | | 2/4 | 810D |
| - | 0 | 0 | 32767 | UNS. WORD | | immediately | |

| 1798 | FIRMWARE_DATE | | | | | CR: / DD1 / | |
|---|---|---|---|---|---|---|---|
| D04, EXP | Firmware date | | | FDD/MSD | ROT/LIN | 2/4 | 840D |
| - | 0 | 0 | 65535 | UNS. WORD | | immediately | |

| 1799 | FIRMWARE_VERSION | | | | CR: DD1 | |
|---|---|---|---|---|---|---|
| D04<br>- | Firmware release | | | MSD SLM FDD | 2/4 | |
| HW:P2 | 0 | 0 | 4294967295 | UNS.DWORD | Immediately | |

| 1799 | FIRMWARE_VERSION | | | | | CR: / DD1/ | |
|---|---|---|---|---|---|---|---|
| | Firmware release | | | FDD/MSD | | 2/4 | 810D |
| - | 0 | 0 | 32767 | UNS. DWORD | | immediately | |

| 1799 | FIRMWARE_VERSION | | | | | CR: / DD1 / | |
|---|---|---|---|---|---|---|---|
| D04 | Firmware release | | | FDD/MSD | ROT/LIN | 2/4 | 840D |
| - | 0 | 0 | 2147483647 | UNS. DWORD | | immediately | |

| 2005 | ENC_RESOL_MOTOR_M2 | | | | | CR: / / | |
|---|---|---|---|---|---|---|---|
| D06 | Motor measuring system encoder increments (not 810D) | | | MSD | ROT | 2/4 | 840D |
| - | 2048 | 1 | 65535 | UNS. WORD | | PowerOn | |

| 2098 | INVERTER_MAX_CURR_DERAT_M2 | | | | | CR: /DE1, DM1 / | |
|---|---|---|---|---|---|---|---|
| D05 | PS derating limit current (not 810D) | | | MSD | ROT | 2/4 | 840D |
| A | 200.0000 | 0.0000 | 500.0000 | FLOAT | | immediately | |

| 2099 | INVERTER_DERATING_FACT_M2 | | | | | CR: /DE1, DM1 / | |
|---|---|---|---|---|---|---|---|
| D05 | PS limit current derating (not 810D) | | | MSD | ROT | 2/4 | 840D |
| % | 0.0000 | 0.0000 | 100.0000 | FLOAT | | immediately | |

| 2100 | PWM_FREQUENCY_M2 | | | | | CR: / / | |
|---|---|---|---|---|---|---|---|
| D01, D05, EXP | Pulse-width modulation frequency (not 810D) | | | MSD | ROT | 2/4 | 840D |
| Hz | 3200.0000 | 2000.0000 | 8000.0000 | FLOAT | | PowerOn | |

| 2102 | MOTOR_CODE_M2 | | | | | CR: / / | |
|---|---|---|---|---|---|---|---|
| D04, D05 | Motor code number (not 810D) | | | MSD | ROT | 2/4 | 840D |
| - | 0 | 0 | 65535 | UNS. WORD | | PowerOn | |

| 2103 | MOTOR_NOMINAL_CURRENT_M2 | | | | | CR: / / | |
|---|---|---|---|---|---|---|---|
| D05 | Motor rated current (not 810D) | | | MSD | ROT | 2/4 | 840D |
| A | 0.0000 | 0.0000 | 500.0000 | FLOAT | | PowerOn | |

| 2117 | MOTOR_INERTIA_M2 | | | | | CR: / / | |
|---|---|---|---|---|---|---|---|
| D05 | Motor moment of inertia (not 810D) | | | MSD | ROT | 2/4 | 840D |
| kgm² | 0.0010 | 0.0000 | 32.0000 | FLOAT | | immediately | |

| 2119 | SERIES_INDUCTANCE_M2 | | | | | CR: / / | |
|---|---|---|---|---|---|---|---|
| D05 | Inductance of the series reactor (not 810D) | | | MSD | ROT | 2/4 | 840D |
| mH | 0.0000 | 0.0000 | 65.0000 | FLOAT | | PowerOn | |

| 2120 | CURRCTRL_GAIN_M2 | | | | | CR: / / | |
|---|---|---|---|---|---|---|---|
| D01, EXP | Current controller P gain (not 810D) | | | MSD | ROT | 2/4 | 840D |
| V/A | 10.0000 | 0.0000 | 10000.0000 | FLOAT | | immediately | |

| 2121 | CURRCTRL_INTEGRATOR_TIME_M2 | | | | | CR: / / | |
|---|---|---|---|---|---|---|---|
| D01, EXP | Current controller integral action time (not 810D) | | | MSD | ROT | 2/4 | 840D |
| us | 2000.0000 | 0.0000 | 8000.0000 | FLOAT | | immediately | |

© Siemens AG 2004 All Rights Reserved

| 2125 | UF_MODE_RAMP_TIME_1_M2 | | | | | CR: / / | |
|---|---|---|---|---|---|---|---|
| D04, EXP | Ramp-up time 1 in V/f operation (not 810D) | | | MSD | ROT | 2/4 | 840D |
| s | 5.0000 | 0.0100 | 100.0000 | FLOAT | | immediately | |

| 2126 | UF_MODE_RAMP_TIME_2_M2 | | | | | CR: / / | |
|---|---|---|---|---|---|---|---|
| D04, EXP | Ramp-up time 2 in V/f operation (not 810D) | | | MSD | ROT | 2/4 | 840D |
| s | 5.0000 | 0.0100 | 100.0000 | FLOAT | | immediately | |

| 2127 | UF_VOLTAGE_AT_F0_M2 | | | | | CR: / / | |
|---|---|---|---|---|---|---|---|
| D04, D05, EXP | Voltage at f=0 in V/f operation (not 810D) | | | MSD | ROT | 2/4 | 840D |
| V | 2.0000 | 0.0000 | 20.0000 | FLOAT | | immediately | |

| 2129 | POWER_FACTOR_COS_PHI_M2 | | | | | CR: / / | |
|---|---|---|---|---|---|---|---|
| D05 | Cos phi power factor (not 810D) | | | MSD | ROT | 2/4 | 840D |
| - | 0.8000 | 0.0000 | 1.0000 | FLOAT | | PowerOn | |

| 2130 | MOTOR_NOMINAL_POWER_M2 | | | | | CR: / / | |
|---|---|---|---|---|---|---|---|
| D05 | Rated motor output (not 810D) | | | MSD | ROT | 2/4 | 840D |
| kW | 0.0000 | 0.0000 | 1500.0000 | FLOAT | | PowerOn | |

| 2132 | MOTOR_NOMINAL_VOLTAGE_M2 | | | | | CR: / / | |
|---|---|---|---|---|---|---|---|
| D05 | Rated motor voltage (not 810D) | | | MSD | ROT | 2/4 | 840D |
| V | 380.0000 | 0.0000 | 5000.0000 | FLOAT | | PowerOn | |

| 2134 | MOTOR_NOMINAL_FREQUENCY_M2 | | | | | CR: / / | |
|---|---|---|---|---|---|---|---|
| D05 | Rated motor frequency (not 810D) | | | MSD | ROT | 2/4 | 840D |
| Hz | 50.0000 | 0.0000 | 3000.0000 | FLOAT | | PowerOn | |

| 2135 | MOTOR_NOLOAD_VOLTAGE_M2 | | | | | CR: / / | |
|---|---|---|---|---|---|---|---|
| D05 | Motor no-load voltage (not 810D) | | | MSD | ROT | 2/4 | 840D |
| V | 0.0000 | 0.0000 | 500.0000 | FLOAT | | immediately | |

| 2136 | MOTOR_NOLOAD_CURRENT_M2 | | | | | CR: / / | |
|---|---|---|---|---|---|---|---|
| D05 | Motor no-load current (not 810D) | | | MSD | ROT | 2/4 | 840D |
| A | 0.0000 | 0.0000 | 500.0000 | FLOAT | | immediately | |

| 2137 | STATOR_COLD_RESISTANCE_M2 | | | | | CR: / / | |
|---|---|---|---|---|---|---|---|
| D05 | Cold stator resistance (not 810D) | | | MSD | ROT | 2/4 | 840D |
| ohm | 0.0000 | 0.0000 | 120.0000 | FLOAT | | immediately | |

| 2138 | ROTOR_COLD_RESISTANCE_M2 | | | | | CR: / / | |
|---|---|---|---|---|---|---|---|
| D05 | Cold rotor resistance (not 810D) | | | MSD | ROT | 2/4 | 840D |
| ohm | 0.0000 | 0.0000 | 120.0000 | FLOAT | | immediately | |

| 2139 | STATOR_LEAKAGE_REACTANCE_M2 | | | | | CR: / / | |
|---|---|---|---|---|---|---|---|
| D05 | Stator leakage reactance (not 810D) | | | MSD | ROT | 2/4 | 840D |
| ohm | 0.0000 | 0.0000 | 100.0000 | FLOAT | | immediately | |

| 2140 | ROTOR_LEAKAGE_REACTANCE_M2 | | | | | CR: / / | |
|---|---|---|---|---|---|---|---|
| D05 | Rotor leakage reactance (not 810D) | | | MSD | ROT | 2/4 | 840D |
| ohm | 0.0000 | 0.0000 | 100.0000 | FLOAT | | immediately | |

| 2141 | MAGNETIZING_REACTANCE_M2 | | | | | CR: / / | |
|---|---|---|---|---|---|---|---|
| D05 | Magnetizing reactance (not 810D) | | | MSD | ROT | 2/4 | 840D |
| ohm | 0.0000 | 0.0000 | 1000.0000 | FLOAT | | immediately | |

| 2142 | FIELD_WEAKENING_SPEED_M2 | | | | | CR: / / | |
|---|---|---|---|---|---|---|---|
| D05 | Threshold speed for field weakening (not 810D) | | | MSD | ROT | 2/4 | 840D |
| 1/min | 0.0000 | 0.0000 | 100000.0000 | FLOAT | | immediately | |

© Siemens AG 2004 All Rights Reserved

| 2143 | LH_CURVE_UPPER_SPEED_M2 | | | | | CR: / / | |
|---|---|---|---|---|---|---|---|
| - | Upper speed for the L_h characteristic (not 810D) | | | MSD | ROT | 2/4 | **840D** |
| 1/min | 0.0000 | 0.0000 | 100000.0000 | FLOAT | | PowerOn | |

| 2144 | LH_CURVE_GAIN_M2 | | | | | CR: / / | |
|---|---|---|---|---|---|---|---|
| - | Gain factor of the L_h characteristic (not 810D) | | | MSD | ROT | 2/4 | **840D** |
| % | 100.0000 | 100.0000 | 500.0000 | FLOAT | | PowerOn | |

| 2145 | STALL_TORQUE_REDUCTION_M2 | | | | | CR: / / | |
|---|---|---|---|---|---|---|---|
| D05 | Stall torque reduction factor (not 810D) | | | MSD | ROT | 2/4 | **840D** |
| % | 100.0000 | 5.0000 | 1000.0000 | FLOAT | | immediately | |

| 2146 | MOTOR_MAX_ALLOWED_SPEED_M2 | | | | | CR: / / | |
|---|---|---|---|---|---|---|---|
| D05 | Maximum motor speed (not 810D) | | | MSD | ROT | 2/4 | **840D** |
| 1/min | 1500.0000 | 0.0000 | 100000.0000 | FLOAT | | PowerOn | |

| 2147 | SPEED_LIMIT_M2 | | | | | CR: / / | |
|---|---|---|---|---|---|---|---|
| D02, D05 | Motor speed limit (not 810D) | | | MSD | ROT | 2/4 | **840D** |
| 1/min | 8000.0000 | 0.0000 | 100000.0000 | FLOAT | | immediately | |

| 2148 | ACTUAL_STALL_POWER_SPEED_M2 | | | | | CR: / / | |
|---|---|---|---|---|---|---|---|
| D04 | Threshold speed of pull-out power (not 810D) | | | MSD | ROT | 2/4 | **840D** |
| 1/min | 0.0000 | -100000.0000 | 100000.0000 | FLOAT | | immediately | |

| 2150 | FIELDCTRL_GAIN_M2 | | | | | CR: / / | |
|---|---|---|---|---|---|---|---|
| D01, EXP | Flux controller P-gain (not 810D) | | | MSD | ROT | 2/4 | **840D** |
| A/(Vs) | 400.0000 | 0.0000 | 100000.0000 | FLOAT | | immediately | |

| 2151 | FIELDCTRL_INTEGRATOR_TIME_M2 | | | | | CR: / / | |
|---|---|---|---|---|---|---|---|
| D01, EXP | Flux controller integral-action time (not 810D) | | | MSD | ROT | 2/4 | **840D** |
| ms | 10.0000 | 0.0000 | 500.0000 | FLOAT | | immediately | |

| 2160 | FLUX_ACQUISITION_SPEED_M2 | | | | | CR: / / | |
|---|---|---|---|---|---|---|---|
| D01, EXP | Threshold speed for flux sensing (not 810D) | | | MSD | ROT | 2/4 | **840D** |
| 1/min | 1500.0000 | 200.0000 | 100000.0000 | FLOAT | | immediately | |

| 2185 | STARTUP_FACT_CURRCTRL_M2 | | | | | CR: / / | |
|---|---|---|---|---|---|---|---|
| - | Startup factor P-IREG (M2) (not 810D) | | | MSD | ROT | 2/4 | **840D** |
| % | 100.0000 | 0.0000 | 10000.0000 | FLOAT | | immediately | |

| 2190 | TORQUE_LIMIT_FROM_NC_M2 | | | | | CR: / / | |
|---|---|---|---|---|---|---|---|
| D02, EXP | Evaluation of torque limit (not 810D) | | | MSD | ROT | 2/4 | **840D** |
| Nm | 100.0000 | 0.0000 | 10000.0000 | FLOAT | | immediately | |

| 2192 | TORQUE_LIMIT_WEIGHT_M2 | | | | | CR: / / | |
|---|---|---|---|---|---|---|---|
| D02, EXP | Weight torque (not 810D) | | | MSD | ROT | 2/4 | **840D** |
| % | 0.0000 | -100.0000 | 100.0000 | FLOAT | | immediately | |

| 2230 | **TORQUE_LIMIT_1_M2** [n] 0 ...7 Index of param.-set | | | | | CR: / / | |
|---|---|---|---|---|---|---|---|
| D02, EXP | 1st torque limit (not 810D) | | | MSD | ROT | 2/4 | **840D** |
| % | 100.0000 | 5.0000 | 900.0000 | FLOAT | | immediately | |

| 2231 | TORQUE_LIMIT_2_M2 | | | | | CR: / / | |
|---|---|---|---|---|---|---|---|
| D02, EXP | 2nd torque limit (not 810D) | | | MSD | ROT | 2/4 | **840D** |
| % | 100.0000 | 5.0000 | 100.0000 | FLOAT | | immediately | |

| 2232 | TORQUE_LIMIT_SWITCH_SPEED_M2 | | | | | CR: / / | |
|---|---|---|---|---|---|---|---|
| D02, EXP | Changeover speed from MD 1230 to MD 1231 (not 810D) | | | MSD | ROT | 2/4 | **840D** |
| 1/min | 6000.0000 | 0.0000 | 100000.0000 | FLOAT | | immediately | |

© Siemens AG 2004 All Rights Reserved

| 2233 | **TORQUE_LIMIT_GENERATOR_M2** [n] 0 ...7 Index of param.-set | | | | | CR: / / | |
|---|---|---|---|---|---|---|---|
| D02, EXP | Regenerative limiting (not 810D) | | | MSD | ROT | 2/4 | **840D** |
| % | 100.0000 | 5.0000 | 100.0000 | FLOAT | | immediately | |

| 2234 | **TORQUE_LIMIT_SWITCH_HYST_M2** | | | | | CR: / / | |
|---|---|---|---|---|---|---|---|
| D02, EXP | Hysteresis MD 1232 (not 810D) | | | MSD | ROT | 2/4 | **840D** |
| 1/min | 50.0000 | 0.0000 | 1000.0000 | FLOAT | | immediately | |

| 2235 | **POWER_LIMIT_1_M2** [n] 0 ...7 Index of param.-set | | | | | CR: / / | |
|---|---|---|---|---|---|---|---|
| D02, EXP | 1st power limit (not 810D) | | | MSD | ROT | 2/4 | **840D** |
| % | 100.0000 | 5.0000 | 900.0000 | FLOAT | | immediately | |

| 2236 | **POWER_LIMIT_2_M2** | | | | | CR: / / | |
|---|---|---|---|---|---|---|---|
| D02, EXP | 2nd power limit (not 810D) | | | MSD | ROT | 2/4 | **840D** |
| % | 100.0000 | 5.0000 | 100.0000 | FLOAT | | immediately | |

| 2238 | **CURRENT_LIMIT_M2** | | | | | CR: / / | |
|---|---|---|---|---|---|---|---|
| D02 | Motor current limit (not 810D) | | | MSD | ROT | 2/4 | **840D** |
| % | 150.0000 | 0.0000 | 400.0000 | FLOAT | | immediately | |

| 2239 | **TORQUE_LIMIT_FOR_SETUP_M2** | | | | | CR: / / | |
|---|---|---|---|---|---|---|---|
| D02 | Torque limit in setting-up operation (not 810D) | | | MSD | ROT | 2/4 | **840D** |
| % | 1.0000 | 0.5000 | 100.0000 | FLOAT | | immediately | |

| 2245 | **CURRENT_SMOOTH_SPEED_M2** | | | | | CR: / / | |
|---|---|---|---|---|---|---|---|
| EXP | Threshold speed dep. on M setpoint smoothing (not 810D) | | | MSD | ROT | 2/4 | **840D** |
| 1/min | 0.0000 | 0.0000 | 100000.0000 | FLOAT | | immediately | |

| 2246 | **CURRENT_SMOOTH_HYSTERESIS_M2** | | | | | CR: / / | |
|---|---|---|---|---|---|---|---|
| EXP | Hysteresis speed dep. M setpoint smoothing (not 810D) | | | MSD | ROT | 2/4 | **840D** |
| 1/min | 50.0000 | 0.0000 | 1000.0000 | FLOAT | | immediately | |

| 2400 | **MOTOR_RATED_SPEED_M2** | | | | | CR: / / | |
|---|---|---|---|---|---|---|---|
| D05 | Rated motor speed (not 810D) | | | MSD | ROT | 2/4 | **840D** |
| 1/min | 1450.0000 | 0.0000 | 100000.0000 | FLOAT | | PowerOn | |

| 2401 | **MOTOR_MAX_SPEED_M2** [n] 0 ...7 Index of param.-set | | | | | CR: / / | |
|---|---|---|---|---|---|---|---|
| D02, D05 | Maximum usable motor speed (not 810D) | | | MSD | ROT | 2/4 | **840D** |
| 1/min | 0.0000 | 0.0000 | 100000.0000 | FLOAT | | PowerOn | |

| 2403 | **PULSE_SUPPRESSION_SPEED_M2** | | | | | CR: / / | |
|---|---|---|---|---|---|---|---|
| D02 | Shut down speed pulse suppression (not 810D) | | | MSD | ROT | 2/4 | **840D** |
| 1/min | 2.0000 | 0.0000 | 7200.0000 | FLOAT | | immediately | |

| 2405 | **MOTOR_SPEED_LIMIT_M2** [n] 0 ...7 Index of param.-set | | | | | CR: / / | |
|---|---|---|---|---|---|---|---|
| D02, D05 | Monitoring motor speed (not 810D) | | | MSD | ROT | 2/4 | **840D** |
| % | 110.0000 | 100.0000 | 110.0000 | FLOAT | | immediately | |

| 2407 | **SPEEDCTRL_GAIN_1_M2** [n] 0 ...7 Index of param.-set | | | | | CR: / / | |
|---|---|---|---|---|---|---|---|
| D01, D08 | P gain of speed controller (not 810D) | | | MSD | ROT | 2/4 | **840D** |
| Nms/rad | 0.3000 | 0.0000 | 1000000.0000 | FLOAT | | immediately | |

| 2408 | **SPEEDCTRL_GAIN_2_M2** [n] 0 ...7 Index of param.-set | | | | | CR: / / | |
|---|---|---|---|---|---|---|---|
| D01, EXP | P gain of upper adaptation speed (not 810D) | | | MSD | ROT | 2/4 | **840D** |
| Nms/rad | 0.3000 | 0.0000 | 1000000.0000 | FLOAT | | immediately | |

| 2409 | **SPEEDCTRL_INTEGRATOR_TIME_1_M2** [n] 0 ...7 Index of param.-set | | | | | CR: / / | |
|---|---|---|---|---|---|---|---|
| D01, D08 | Integral action time of speed controller (not 810D) | | | MSD | ROT | 2/4 | **840D** |
| ms | 10.0000 | 0.0000 | 500.0000 | FLOAT | | immediately | |

© Siemens AG 2004 All Rights Reserved

| **2410** | **SPEEDCTRL_INTEGRATOR_TIME_2_M2** [n] 0 ...7 Index of param.-set | | | | | CR: / / | |
|---|---|---|---|---|---|---|---|
| D01, EXP | Integral action time of upper adaptation speed (not 810D) | | | MSD | ROT | 2/4 | **840D** |
| ms | 10.0000 | 0.0000 | 500.0000 | FLOAT | | immediately | |

| **2411** | **SPEEDCTRL_ADAPT_SPEED_1_M2** | | | | | CR: / / | |
|---|---|---|---|---|---|---|---|
| D01, EXP | Lower adaptation speed (not 810D) | | | MSD | ROT | 2/4 | **840D** |
| 1/min | 0.0000 | 0.0000 | 100000.0000 | FLOAT | | immediately | |

| **2412** | **SPEEDCTRL_ADAPT_SPEED_2_M2** | | | | | CR: / / | |
|---|---|---|---|---|---|---|---|
| D01, EXP | Upper adaptation speed (not 810D) | | | MSD | ROT | 2/4 | **840D** |
| 1/min | 0.0000 | 0.0000 | 100000.0000 | FLOAT | | immediately | |

| **2413** | **SPEEDCTRL_ADAPT_ENABLE_M2** | | | | | CR: / / | |
|---|---|---|---|---|---|---|---|
| D01, EXP | Select adaptation speed controller (not 810D) | | | MSD | ROT | 2/4 | **840D** |
| - | 0 | 0 | 1 | UNS. WORD | | immediately | |

| **2417** | **SPEED_THRESHOLD_X_M2** [n] 0 ...7 Index of param.-set | | | | | CR: / / | |
|---|---|---|---|---|---|---|---|
| D03 | Signal n_x for 'n_act < n_x' (not 810D) | | | MSD | ROT | 2/4 | **840D** |
| 1/min | 6000.0000 | 0.0000 | 100000.0000 | FLOAT | | immediately | |

| **2418** | **SPEED_THRESHOLD_MIN_M2** [n] 0 ...7 Index of param.-set | | | | | CR: / / | |
|---|---|---|---|---|---|---|---|
| D03 | Signal n_min for 'n_act < n_min' (not 810D) | | | MSD | ROT | 2/4 | **840D** |
| 1/min | 5.0000 | 0.0000 | 100000.0000 | FLOAT | | immediately | |

| **2426** | **SPEED_DES_EQ_ACT_TOL_M2** [n] 0 ...7 Index of param.-set | | | | | CR: / / | |
|---|---|---|---|---|---|---|---|
| D03 | Tolerance bandwidth for 'n_act = n_set' signal (not 810D) | | | MSD | ROT | 2/4 | **840D** |
| 1/min | 20.0000 | 0.0000 | 10000.0000 | FLOAT | | immediately | |

| **2451** | **SPEEDCTRL_GAIN_1_AM_M2** [n] 0 ...7 Index of param.-set | | | | | CR: / / | |
|---|---|---|---|---|---|---|---|
| D01 | P gain of speed control loop IM (not 810D) | | | MSD | ROT | 2/4 | **840D** |
| Nms/rad | 0.3000 | 0.0000 | 100000.0000 | FLOAT | | immediately | |

| **2453** | **SPDCTRL_INTEGR_TIME_1_AM_M2** [n] 0 ...7 Index of param.-set | | | | | CR: / / | |
|---|---|---|---|---|---|---|---|
| D01 | Integral action time of speed control loop IM (not 810D) | | | MSD | ROT | 2/4 | **840D** |
| ms | 140.0000 | 0.0000 | 6000.0000 | FLOAT | | immediately | |

| **2458** | **DES_CURRENT_OPEN_LOOP_AM_M2** | | | | | CR: / / | |
|---|---|---|---|---|---|---|---|
| D01 | Current setpoint controlled range IM (not 810D) | | | MSD | ROT | 2/4 | **840D** |
| % | 90.0000 | 0.0000 | 150.0000 | FLOAT | | immediately | |

| **2459** | **TORQUE_SMOOTH_TIME_AM_M2** | | | | | CR: / / | |
|---|---|---|---|---|---|---|---|
| D01 | Torque smoothing time constant IM (not 810D) | | | MSD | ROT | 2/4 | **840D** |
| ms | 4.0000 | 0.0000 | 100.0000 | FLOAT | | immediately | |

| **2465** | **SWITCH_SPEED_MSD_AM_M2** | | | | | CR: / / | |
|---|---|---|---|---|---|---|---|
| D01, D06 | Changeover speed MSD/IM (not 810D) | | | MSD | ROT | 2/4 | **840D** |
| 1/min | 100000.0000 | 0.0000 | 100000.0000 | FLOAT | | immediately | |

| **2466** | **SWITCH_SPD_OPEN_LOOP_AM_M2** | | | | | CR: / / | |
|---|---|---|---|---|---|---|---|
| D01 | Changeover speed closed/open loop IM (not 810D) | | | MSD | ROT | 2/4 | **840D** |
| 1/min | 300.0000 | 150.0000 | 100000.0000 | FLOAT | | immediately | |

| **2602** | **MOTOR_TEMP_WARN_LIMIT_M2** | | | | | CR: / / | |
|---|---|---|---|---|---|---|---|
| D02, D05 | Motor temperature alarm threshold (not 810D) | | | MSD | ROT | 2/4 | **840D** |
| | 120 | 0 | 200 | UNS. WORD | | immediately | |

| **2607** | **MOTOR_TEMP_SHUTDOWN_LIMIT_M2** | | | | | CR: / / | |
|---|---|---|---|---|---|---|---|
| D02, D05 | Motor temperature shutdown limit (not 810D) | | | MSD | ROT | 2/4 | **840D** |
| | 155 | 0 | 200 | UNS. WORD | | immediately | |

© Siemens AG 2004 All Rights Reserved

| 2608 | MOTOR_FIXED_TEMPERATURE_M2 | | | | | CR: / / | |
|---|---|---|---|---|---|---|---|
| D02, D05 | Fixed temperature (not 810D) | | | MSD | ROT | 2/4 | **840D** |
| | 0 | 0 | 200 | UNS. WORD | | immediately | |

| 2711 | SPEED_LSB_M2 | | | | | CR: / / | |
|---|---|---|---|---|---|---|---|
| EXP | Significance of the speed representation (not 810D) | | | MSD | ROT | 2/4 | **840D** |
| 1/min | 0.0000 | -100000.0000 | 100000.0000 | FLOAT | | immediately | |

| 2712 | ROTOR_FLUX_LSB_M2 | | | | | CR: / / | |
|---|---|---|---|---|---|---|---|
| EXP | Significance of the rotor flux representation (not 810D) | | | MSD | ROT | 2/4 | **840D** |
| uVs | 0.0000 | -100000.0000 | 100000.0000 | FLOAT | | immediately | |

| 2713 | TORQUE_LSB_M2 | | | | | CR: / / | |
|---|---|---|---|---|---|---|---|
| EXP | Significance of the torque representation (not 810D) | | | MSD | ROT | 2/4 | **840D** |
| uNm | 0.0000 | -100000.0000 | 100000.0000 | FLOAT | | immediately | |

| 2714 | ROTOR_POS_LSB_M2 | | | | | CR: / / | |
|---|---|---|---|---|---|---|---|
| EXP | Significance of rotor position representation (not 810D) | | | MSD | ROT | 2/4 | **840D** |
| degrees | 0.0000 | -100000.0000 | 100000.0000 | FLOAT | | immediately | |

| 2725 | MAX_TORQUE_FROM_NC_M2 | | | | | CR: / / | |
|---|---|---|---|---|---|---|---|
| EXP | Standardising the torque setpoint average (not 810D) | | | MSD | ROT | 2/4 | **840D** |
| Nm | 0.0000 | -100000.0000 | 100000.0000 | FLOAT | | immediately | |

© Siemens AG 2004 All Rights Reserved

## 2.3 Machine data for hydraulics module

| Number | MD identifier | | | | | Cross ref. | |
|---|---|---|---|---|---|---|---|
| Display filter | Name | | | Drive Type | Prot. level | SW | 840D |
| Unit | Default value | Minimum value | Maximum value | Data type | | Valid from | |

| 5001 | SPEEDCTRL_CYCLE_TIME | | | | | CR: /FBHLA/ | |
|---|---|---|---|---|---|---|---|
| D01, EXP | Velocity controller clockrate | | | HLD | 3/3 | 5.1 | 840D |
| 31,25 us | 4 | 2 | 16 | UNS. WORD | | PowerOn | |

| 5002 | MONITOR_CYCLE_TIME | | | | | CR: /FBHLA/ | |
|---|---|---|---|---|---|---|---|
| EXP | Monitoring cycle | | | HLD | 3/3 | 5.1 | 840D |
| 31,25 us | 3200 | 128 | 3200 | UNS. WORD | | PowerOn | |

| 5003 | STS_CONFIG | | | | | CR: /FBHLA/ | |
|---|---|---|---|---|---|---|---|
| EXP | STS configuration | | | HLD | 3/3 | 5.1 | 840D |
| HEX | 330 | 0 | 7F0 | UNS. WORD | | PowerOn | |

| 5004 | CTRL_CONFIG | | | | | CR: /FBHLA/ | |
|---|---|---|---|---|---|---|---|
| D01 | Configuration structure | | | HLD | 3/3 | 5.2 | 840D |
| HEX | 1000 | 0 | 1000 | UNS. WORD | | PowerOn | |

| 5005 | ENC_RESOL_MOTOR | | | | | CR: /FBHLA/ | |
|---|---|---|---|---|---|---|---|
| EXP | Increments of rotary measuring system | | | HLD | 3/3 | 5.1 | 840D |
| - | 2048 | 128 | 65535 | UNS. WORD | | PowerOn | |

| 5008 | ENC_PHASE_ERROR_CORRECTION | | | | | CR: /FBHLA/ | |
|---|---|---|---|---|---|---|---|
| EXP, D06 | Encoder phase error compensation | | | HLD | 3/3 | 5.1 | 840D |
| degrees | 0.0 | -20.0 | 20.0 | FLOAT | | immediately | |

| 5011 | ACTUAL_VALUE_CONFIG | | | | | CR: /FBHLA/ | |
|---|---|---|---|---|---|---|---|
| D06 | Configuration of actual value acquisition | | | HLD | 3/3 | 5.1 | 840D |
| HEX | 0 | 0 | 65535 | UNS. WORD | | PowerOn | |

| 5012 | FUNC_SWITCH | | | | | CR: /FBHLA/ | |
|---|---|---|---|---|---|---|---|
| D01, D02, D03 | Function switch | | | HLD | 3/3 | 5.1 | 840D |
| HEX | 4 | 0 | 65535 | UNS. WORD | | immediately | |

| 5021 | ENC_ABS_TURN_MOTOR | | | | | CR: /FBHLA/ | |
|---|---|---|---|---|---|---|---|
| D06 | Multiturn resol. motor absolute encoder | | | HLD | 3/3 | 5.1 | 840D |
| - | 0 | 0 | FFFF | UNS. WORD | | PowerOn | |

| 5022 | ENC_ABS_RESOL_MOTOR | | | | | CR: /FBHLA/ | |
|---|---|---|---|---|---|---|---|
| D06 | Measuring steps of motor absolute track | | | HLD | 3/3 | 5.1 | 840D |
| - | 8192 | 0 | 7FFFFF | UNS. DWORD | | PowerOn | |

| 5023 | ENC_ABS_DIAGNOSIS_MOTOR | | | | | CR: /FBHLA/ | |
|---|---|---|---|---|---|---|---|
| D06 | Diagnosis of measuring circuit motor absolute track | | | HLD | 3/3 | 5.1 | 840D |
| HEX | 0 | 0 | BFFF | UNS. WORD | | immediately | |

| 5024 | DIVISION_LIN_SCALE | | | | | CR: /FBHLA/ | |
|---|---|---|---|---|---|---|---|
| D06 | Linear scale graduations | | | HLD | 3/3 | 5.1 | 840D |
| nm | 20000 | 1000 | 5000000 | UNS. DWORD | | PowerOn | |

© Siemens AG 2004 All Rights Reserved

| 5025 | SERIAL_NO_ENCODER | | | | | CR: /FBHLA/ | |
|---|---|---|---|---|---|---|---|
| D06, EXP | Serial no. of motor measuring system | | | HLD | 3/3 | 6.3 | 840D |
| - | 0 | 0 | ffffffff | UNS. DWORD | | PowerOn | |

| 5027 | ENC_CONFIG | | | | | CR: /FBHLA/ | |
|---|---|---|---|---|---|---|---|
| D06 | Configuration of encoder IM | | | HLD | 3/3 | 6.3 | 840D |
| HEX | 0 | 0 | ffff | UNS. WORD | | PowerOn | |

| 5028 | NO_TRANSMISSION_BITS | | | | | CR: /FBHLA/ | |
|---|---|---|---|---|---|---|---|
| D06 | IM message frame length SSI | | | HLD | 3/3 | 6.3 | 840D |
| - | 25 | 0 | 25 | UNS. WORD | | PowerOn | |

| 5040 | PISTON_ZERO | | | | | CR: /FBHLA/ | |
|---|---|---|---|---|---|---|---|
| EXP, D04 | Piston zero in relation to machine zero | | | HLD | 3/3 | 5.1 | 840D |
| mm | 0.0 | -1000000.0 | 1000000.0 | FLOAT | | immediately | |

| 5041 | MACHINE_ZERO_HIGH | | | | | CR: /FBHLA/ | |
|---|---|---|---|---|---|---|---|
| EXP | Machine zero in relation to actual position zero | | | HLD | 3/3 | 5.1 | 840D |
| - | 0 | -2147483647 | 7FFFFFFF | DWORD | | immediately | |

| 5042 | MACHINE_ZERO_LOW | | | | | CR: /FBHLA/ | |
|---|---|---|---|---|---|---|---|
| EXP | Machine zero in relation to actual position zero | | | HLD | 3/3 | 5.1 | 840D |
| - | 0 | 0 | FFFFFFFF | UNS. DWORD | | immediately | |

| 5100 | FLUID_ELASTIC_MODULUS | | | | | CR: /FBHLA/ | |
|---|---|---|---|---|---|---|---|
| D01 | Modulus of elasticity for hydraulic oil | | | HLD | 3/3 | 5.1 | 840D |
| bar | 11000 | 1000 | 21000 | FLOAT | | immediately | |

| 5101 | WORKING_PRESSURE | | | | | CR: /FBHLA/ | |
|---|---|---|---|---|---|---|---|
| D01 | System pressure | | | HLD | 3/3 | 5.1 | 840D |
| bar | 0.0 | 0.0 | 700.0 | FLOAT | | PowerOn | |

| 5102 | PILOT_OPERATION_PRESSURE | | | | | CR: /FBHLA/ | |
|---|---|---|---|---|---|---|---|
| D01 | Pilot pressure | | | HLD | 3/3 | 5.1 | 840D |
| bar | 0.0 | 0.0 | 350.0 | FLOAT | | immediately | |

| 5106 | VALVE_CODE | | | | | CR: /FBHLA/ | |
|---|---|---|---|---|---|---|---|
| D05, D04 | Valve code number | | | HLD | 3/3 | 5.1 | 840D |
| - | 0 | 0 | 2000 | UNS. WORD | | immediately | |

| 5107 | VALVE_NOMINAL_FLOW | | | | | CR: /FBHLA/ | |
|---|---|---|---|---|---|---|---|
| D05 | Valve rated flow | | | HLD | 3/3 | 5.1 | 840D |
| l/min | 0.0 | 0.0 | 1000 | FLOAT | | immediately | |

| 5108 | VALVE_NOMINAL_PRESSURE | | | | | CR: /FBHLA/ | |
|---|---|---|---|---|---|---|---|
| D05 | Valve rated pressure drop | | | HLD | 3/3 | 5.1 | 840D |
| bar | 35.0 | 1.0 | 200.0 | FLOAT | | immediately | |

| 5109 | VALVE_NOMINAL_VOLTAGE | | | | | CR: /FBHLA/ | |
|---|---|---|---|---|---|---|---|
| D05 | Valve rated voltage | | | HLD | 3/3 | 5.1 | 840D |
| V | 10.0 | 0.5 | 15.0 | FLOAT | | immediately | |

| 5110 | VALVE_DUAL_GAIN_FLOW | | | | | CR: /FBHLA/ | |
|---|---|---|---|---|---|---|---|
| D05 | Valve flow knee point | | | HLD | 3/3 | 5.1 | 840D |
| % | 10.0 | 0.2 | 95.0 | FLOAT | | immediately | |

| 5111 | VALVE_DUAL_GAIN_VOLTAGE | | | | | CR: /FBHLA/ | |
|---|---|---|---|---|---|---|---|
| D05 | Valve voltage knee point | | | HLD | 3/3 | 5.1 | 840D |
| % | 10.0 | 0.2 | 95.0 | FLOAT | | immediately | |

© Siemens AG 2004 All Rights Reserved

| 5112 | VALVE_FLOW_FACTOR_A_B | | | | | CR: /FBHLA/ | |
|---|---|---|---|---|---|---|---|
| D05 | Valve flow ratio A/B | | | HLD | 3/3 | 5.1 | 840D |
| - | 1.0 | 0.5 | 2.0 | FLOAT | | immediately | |

| 5113 | VALVE_CONFIGURATION | | | | | CR: /FBHLA/ | |
|---|---|---|---|---|---|---|---|
| D05 | Valve configuration | | | HLD | 3/3 | 5.1 | 840D |
| HEX | 0 | 0 | 13 | UNS. WORD | | immediately | |

| 5114 | VALVE_NATURAL_FREQUENCY | | | | | CR: /FBHLA/ | |
|---|---|---|---|---|---|---|---|
| D01, D05 | Valve natural frequency | | | HLD | 3/3 | 5.1 | 840D |
| Hz | 150.0 | 1.0 | 1000.0 | FLOAT | | immediately | |

| 5115 | VALVE_DAMPING | | | | | CR: /FBHLA/ | |
|---|---|---|---|---|---|---|---|
| D01, D05 | Valve damping | | | HLD | 3/3 | 5.1 | 840D |
| - | 0.8 | 0.4 | 1.0 | FLOAT | | immediately | |

| 5131 | CYLINDER_PISTON_DIAMETER | | | | | CR: /FBHLA/ | |
|---|---|---|---|---|---|---|---|
| D05 | Cylinder piston diameter | | | HLD | 3/3 | 5.1 | 840D |
| mm | 0.0 | 0.0 | 2500.0 | FLOAT | | PowerOn | |

| 5132 | PISTON_ROD_A_DIAMETER | | | | | CR: /FBHLA/ | |
|---|---|---|---|---|---|---|---|
| D05 | Cylinder piston rod diameter A | | | HLD | 3/3 | 5.1 | 840D |
| mm | 0.0 | 0.0 | 2400.0 | FLOAT | | PowerOn | |

| 5133 | PISTON_ROD_B_DIAMETER | | | | | CR: /FBHLA/ | |
|---|---|---|---|---|---|---|---|
| D05 | Cylinder piston rod diameter B | | | HLD | 3/3 | 5.1 | 840D |
| mm | 0.0 | 0.0 | 2400.0 | FLOAT | | PowerOn | |

| 5134 | PISTON_STROKE | | | | | CR: /FBHLA/ | |
|---|---|---|---|---|---|---|---|
| D05 | Piston stroke | | | HLD | 3/3 | 5.1 | 840D |
| mm | 0.0 | 0.0 | 3000.0 | FLOAT | | immediately | |

| 5135 | CYLINDER_DEAD_VOLUME_A | | | | | CR: /FBHLA/ | |
|---|---|---|---|---|---|---|---|
| D05 | Cylinder dead volume at the drive end | | | HLD | 3/3 | 5.1 | 840D |
| ccm | 0.0 | 0.0 | 200000.0 | FLOAT | | immediately | |

| 5136 | CYLINDER_DEAD_VOLUME_B | | | | | CR: /FBHLA/ | |
|---|---|---|---|---|---|---|---|
| D05 | Cylinder dead volume at the non-drive end | | | HLD | 3/3 | 5.1 | 840D |
| ccm | 0.0 | 0.0 | 200000.0 | FLOAT | | immediately | |

| 5140 | VALVE_CYLINDER_CONNECTION | | | | | CR: /FBHLA/ | |
|---|---|---|---|---|---|---|---|
| D05 | Connection configuration of valve cylinder | | | HLD | 3/3 | 5.1 | 840D |
| HEX | 0 | 0 | 1 | UNS. WORD | | immediately | |

| 5141 | PIPE_LENGTH_A | | | | | CR: /FBHLA/ | |
|---|---|---|---|---|---|---|---|
| D05 | Pipe length at the drive end | | | HLD | 3/3 | 5.1 | 840D |
| mm | 0.0 | 0.0 | 10000.0 | FLOAT | | immediately | |

| 5142 | PIPE_LENGTH_B | | | | | CR: /FBHLA/ | |
|---|---|---|---|---|---|---|---|
| D05 | Pipe length at the non-drive end | | | HLD | 3/3 | 5.1 | 840D |
| mm | 0.0 | 0.0 | 10000.0 | FLOAT | | immediately | |

| 5143 | PIPE_INNER_DIAMETER_A_B | | | | | CR: /FBHLA/ | |
|---|---|---|---|---|---|---|---|
| D05 | Pipe inside diameters A and B | | | HLD | 3/3 | 5.1 | 840D |
| mm | 5.0 | 0.0 | 100.0 | FLOAT | | immediately | |

| 5150 | DRIVE_MASS | | | | | CR: /FBHLA/ | |
|---|---|---|---|---|---|---|---|
| D05 | Mass moved by drive | | | HLD | 3/3 | 5.1 | 840D |
| kg | 0.0 | 0.0 | 50000.0 | FLOAT | | immediately | |

© Siemens AG 2004 All Rights Reserved

| 5151 | CYLINDER_A_ORIENTATION | | | | | CR: /FBHLA/ | |
|---|---|---|---|---|---|---|---|
| D05 | Mounting position at the drive end of the cylinder | | | HLD | 3/3 | 5.1 | 840D |
| degrees | 0.0 | -90.0 | 90.0 | FLOAT | | immediately | |

| 5152 | CYLINDER_FASTENING | | | | | CR: /FBHLA/ | |
|---|---|---|---|---|---|---|---|
| D05 | Fastening the cylinder | | | HLD | 3/3 | 5.1 | 840D |
| - | 0 | 0 | 1 | UNS. WORD | | immediately | |

| 5160 | PISTON_POS_MIN_NAT_FREQ | | | | | CR: /FBHLA/ | |
|---|---|---|---|---|---|---|---|
| D05 | Piston position min. natural frequency | | | HLD | 3/3 | 5.1 | 840D |
| mm | 0.0 | 0.0 | 3000.0 | FLOAT | | immediately | |

| 5161 | DRIVE_DAMPING | | | | | CR: /FBHLA/ | |
|---|---|---|---|---|---|---|---|
| D01, D05 | Damping the drive | | | HLD | 3/3 | 5.1 | 840D |
| - | 0.1 | 0.01 | 1.0 | FLOAT | | immediately | |

| 5162 | DRIVE_NATURAL_FREQUENCY_A | | | | | CR: /FBHLA/ | |
|---|---|---|---|---|---|---|---|
| D01, D05 | Natural frequency of drive A | | | HLD | 3/3 | 5.1 | 840D |
| Hz | 1.0 | 1.0 | 2000.0 | FLOAT | | immediately | |

| 5163 | DRIVE_NATURAL_FREQUENCY | | | | | CR: /FBHLA/ | |
|---|---|---|---|---|---|---|---|
| D01, D05 | Natural frequency of the drive | | | HLD | 3/3 | 5.1 | 840D |
| Hz | 1.0 | 1.0 | 2000.0 | FLOAT | | immediately | |

| 5164 | DRIVE_NATURAL_FREQUENCY_B | | | | | CR: /FBHLA/ | |
|---|---|---|---|---|---|---|---|
| D01, D05 | Natural frequency of drive B | | | HLD | 3/3 | 5.1 | 840D |
| Hz | 1.0 | 1.0 | 2000.0 | FLOAT | | immediately | |

| 5180 | CLOSED_LOOP_SYSTEM_DAMPING | | | | | CR: /FBHLA/ | |
|---|---|---|---|---|---|---|---|
| D01 | Desired damping closed-loop system | | | HLD | 3/3 | 5.1 | 840D |
| - | 0.7 | 0.2 | 1.0 | FLOAT | | immediately | |

| 5200 | NUM_OUTPUT_VCTRL_FILTERS [n] 0 ...7 Index of param. set | | | | | CR: /FBHLA/ | |
|---|---|---|---|---|---|---|---|
| D01 | Number of manipulated variable filters | | | HLD | 3/3 | 5.1 | 840D |
| - | 0 | 0 | 2 | UNS. WORD | | immediately | |

| 5201 | OUTPUT_VCTRL_FILTER_CONFIG [n] 0 ...7 Index of param. set | | | | | CR: /FBHLA/ | |
|---|---|---|---|---|---|---|---|
| D01 | Type of manipulated variable filter | | | HLD | 3/3 | 5.1 | 840D |
| HEX | 0 | 0 | 3 | UNS. WORD | | immediately | |

| 5202 | OUTPUT_VCTRL_FIL_1_FREQ [n] 0 ...7 Index of param. set | | | | | CR: /FBHLA/ | |
|---|---|---|---|---|---|---|---|
| D01 | PT2 natural frequency of manipulated variable filter 1 | | | HLD | 3/3 | 5.1 | 840D |
| Hz | 1000.0 | 10.0 | 8000.0 | FLOAT | | immediately | |

| 5203 | OUTPUT_VCTRL_FIL_1_DAMP [n] 0 ...7 Index of param. set | | | | | CR: /FBHLA/ | |
|---|---|---|---|---|---|---|---|
| D01 | PT2 damping of manipulated variable filter 1 | | | HLD | 3/3 | 5.1 | 840D |
| - | 1.0 | 0.05 | 1.0 | FLOAT | | immediately | |

| 5204 | OUTPUT_VCTRL_FIL_2_FREQ [n] 0 ...7 Index of param. set | | | | | CR: /FBHLA/ | |
|---|---|---|---|---|---|---|---|
| D01 | PT2 natural frequency of manipulated variable filter 2 | | | HLD | 3/3 | 5.1 | 840D |
| Hz | 1000.0 | 10.0 | 8000.0 | FLOAT | | immediately | |

| 5205 | OUTPUT_VCTRL_FIL_2_DAMP [n] 0 ...7 Index of param. set | | | | | CR: /FBHLA/ | |
|---|---|---|---|---|---|---|---|
| D01 | PT2 damping of manipulated variable filter 2 | | | HLD | 3/3 | 5.1 | 840D |
| - | 1.0 | 0.05 | 1.0 | FLOAT | | immediately | |

| 5210 | OUTPUT_VCTRL_FIL_1_SUP_FREQ [n] 0 ...7 Index of param. set | | | | | CR: /FBHLA/ | |
|---|---|---|---|---|---|---|---|
| D01 | Blocking frequency for manipulated variable filter 1 | | | HLD | 3/3 | 5.1 | 840D |
| Hz | 3500.0 | 1.0 | 7999.0 | FLOAT | | immediately | |

© Siemens AG 2004 All Rights Reserved

| 5211 | **OUTPUT_VCTRL_FIL_1_BW** [n] 0 ...7 Index of param. set | | | | | CR: **/FBHLA/** | |
|---|---|---|---|---|---|---|---|
| D01 | Bandwidth of manipulated variable filter 1 | | | HLD | 3/3 | 5.1 | **840D** |
| Hz | 500.0 | 5.0 | 7999.0 | FLOAT | | immediately | |

| 5212 | **OUTPUT_VCTRL_FIL_1_BW_NUM** [n] 0 ...7 Index of param. set | | | | | CR: **/FBHLA/** | |
|---|---|---|---|---|---|---|---|
| D01 | Numerator bandwidth of manipulated variable filter 1 | | | HLD | 3/3 | 5.1 | **840D** |
| Hz | 0.0 | 0.0 | 7999.0 | FLOAT | | immediately | |

| 5213 | **OUTPUT_VCTRL_FIL_2_SUP_FREQ** [n] 0 ...7 Index of param. set | | | | | CR: **/FBHLA/** | |
|---|---|---|---|---|---|---|---|
| D01 | Blocking frequency of manipulated variable filter 2 | | | HLD | 3/3 | 5.1 | **840D** |
| Hz | 3500.0 | 1.0 | 7999.0 | FLOAT | | immediately | |

| 5214 | **OUTPUT_VCTRL_FIL_2_BW** [n] 0 ...7 Index of param. set | | | | | CR: **/FBHLA/** | |
|---|---|---|---|---|---|---|---|
| D01 | Bandwidth of manipulated variable filter 2 | | | HLD | 3/3 | 5.1 | **840D** |
| Hz | 500.0 | 5.0 | 7999.0 | FLOAT | | immediately | |

| 5215 | **OUTPUT_VCTRL_FIL_2_BW_NUM** [n] 0 ...7 Index of param. set | | | | | CR: **/FBHLA/** | |
|---|---|---|---|---|---|---|---|
| D01 | Numerator bandwidth of manipulated variable filter 2 | | | HLD | 3/3 | 5.1 | **840D** |
| Hz | 0.0 | 0.0 | 7999.0 | FLOAT | | immediately | |

| 5230 | **FORCE_LIMIT_THRESHOLD** [n] 0 ...7 Index of param. set | | | | | CR: **/FBHLA/** | |
|---|---|---|---|---|---|---|---|
| D02 | Power limitation threshold for weight | | | HLD | 3/3 | 5.1 | **840D** |
| N | 10000.0 | 0.0 | 100000000.0 | FLOAT | | immediately | |

| 5231 | **FORCE_LIMIT_WEIGHT** [n] 0 ...7 Index of param. set | | | | | CR: **/FBHLA/** | |
|---|---|---|---|---|---|---|---|
| D02 | Power limitation weight | | | HLD | 3/3 | 5.1 | **840D** |
| N | 0.0 | -100000000.0 | 100000000.0 | FLOAT | | immediately | |

| 5232 | **STICTION_SPEED_THRESHOLD** | | | | | CR: **/FBHLA/** | |
|---|---|---|---|---|---|---|---|
| D02 | Velocity threshold static friction | | | HLD | 3/3 | 5.1 | **840D** |
| mm/min | 10.0 | 0.0 | 500.0 | FLOAT | | immediately | |

| 5233 | **STICTION_COMP_THRESHOLD** | | | | | CR: **/FBHLA/** | |
|---|---|---|---|---|---|---|---|
| D01 | Interrupting lead static friction | | | HLD | 3/3 | 5.1 | **840D** |
| % | 40.0 | 3.0 | 100.0 | FLOAT | | immediately | |

| 5234 | **STICTION_FORCE_POS** | | | | | CR: **/FBHLA/** | |
|---|---|---|---|---|---|---|---|
| D02 | Friction force velocity >0 | | | HLD | 3/3 | 5.1 | **840D** |
| N | 100.0 | -100000000.0 | 100000000.0 | FLOAT | | immediately | |

| 5235 | **STICTION_FORCE_NEG** | | | | | CR: **/FBHLA/** | |
|---|---|---|---|---|---|---|---|
| D02 | Friction force velocity <0 | | | HLD | 3/3 | 5.1 | **840D** |
| N | -100.0 | -100000000.0 | 100000000.0 | FLOAT | | immediately | |

| 5240 | **FORCECONTROLLED_SYSTEM_GAIN** | | | | | CR: **/FBHLA/** | |
|---|---|---|---|---|---|---|---|
| D01 | Controlled system gain power controller | | | HLD | 3/3 | 5.1 | **840D** |
| N/V | 0.0 | 0.0 | 1000000000.0 | FLOAT | | immediately | |

| 5241 | **FORCECTRL_CONFIG** [n] 0 ...7 Index of param. set | | | | | CR: **/FBHLA/** | |
|---|---|---|---|---|---|---|---|
| D02 | Configuration of force controller | | | HLD | 3/3 | 5.1 | **840D** |
| HEX | 0 | 0 | 6 | UNS. WORD | | immediately | |

| 5242 | **FORCECTRL_GAIN** [n] 0 ...7 Index of param. set | | | | | CR: **/FBHLA/** | |
|---|---|---|---|---|---|---|---|
| D01 | P gain of force controller | | | HLD | 3/3 | 5.1 | **840D** |
| - | 0.0 | 0.0 | 10000.0 | FLOAT | | immediately | |

| 5243 | **FORCECTRL_GAIN_RED** | | | | | CR: **/FBHLA/** | |
|---|---|---|---|---|---|---|---|
| D01 | Attenuation of power controller P component | | | HLD | 3/3 | 5.1 | **840D** |
| % | 40.0 | 0.1 | 100.0 | FLOAT | | immediately | |

© Siemens AG 2004 All Rights Reserved

| 5244 | **FORCECTRL_INTEGRATOR_TIME** [n] 0 ...7 Index of param. set | | | | | CR: **/FBHLA/** | |
|---|---|---|---|---|---|---|---|
| D01 | Power controller reset time | | | HLD | 3/3 | 5.1 | **840D** |
| ms | 40.0 | 0.0 | 2000.0 | FLOAT | | immediately | |

| 5245 | **FORCECTRL_PT1_TIME** [n] 0 ...7 Index of param. set | | | | | CR: **/FBHLA/** | |
|---|---|---|---|---|---|---|---|
| D01 | Power controller smoothing time constant | | | HLD | 3/3 | 5.1 | **840D** |
| ms | 0.5 | 0.25 | 100.0 | FLOAT | | immediately | |

| 5246 | **FORCECTRL_DIFF_TIME** [n] 0 ...7 Index of param. set | | | | | CR: **/FBHLA/** | |
|---|---|---|---|---|---|---|---|
| D01 | Power controller lead time | | | HLD | 3/3 | 5.1 | **840D** |
| ms | 0.0 | -10000.0 | 10000.0 | FLOAT | | immediately | |

| 5247 | **FORCE_FFW_WEIGHT** | | | | | CR: **/FBHLA/** | |
|---|---|---|---|---|---|---|---|
| D01 | Power controller precontrol factor | | | HLD | 3/3 | 5.1 | **840D** |
| % | 100.0 | 0.0 | 120.0 | FLOAT | | immediately | |

| 5260 | **NUM_FFW_FCTRL_FILTERS** [n] 0 ...7 Index of param. set | | | | | CR: **/FBHLA/** | |
|---|---|---|---|---|---|---|---|
| D01 | Number of pilot filters in force controller | | | HLD | 3/3 | 5.2 | **840D** |
| - | 0 | 0 | 1 | UNS. WORD | | immediately | |

| 5261 | **FFW_FCTRL_FILTER_TYPE** [n] 0 ...7 Index of param. set | | | | | CR: **/FBHLA/** | |
|---|---|---|---|---|---|---|---|
| D01 | Type of pilot filter in the force controller | | | HLD | 3/3 | 5.2 | **840D** |
| HEX | 0 | 0 | 1 | UNS. WORD | | immediately | |

| 5264 | **FFW_FCTRL_FIL_1_FREQ** [n] 0 ...7 Index of param. set | | | | | CR: **/FBHLA/** | |
|---|---|---|---|---|---|---|---|
| D01 | PT2 natural freq. pilot filter 1 | | | HLD | 3/3 | 5.2 | **840D** |
| Hz | 2000.0 | 10.0 | 8000.0 | FLOAT | | immediately | |

| 5265 | **FFW_FCTRL_FIL_1_DAMP** [n] 0 ...7 Index of param. set | | | | | CR: **/FBHLA/** | |
|---|---|---|---|---|---|---|---|
| D01 | PT2 damping pilot filter 1 | | | HLD | 3/3 | 5.2 | **840D** |
| - | 0.7 | 0.2 | 1.0 | FLOAT | | immediately | |

| 5268 | **FFW_FCTRL_FIL_1_SUP_FREQ** [n] 0 ...7 Index of param. set | | | | | CR: **/FBHLA/** | |
|---|---|---|---|---|---|---|---|
| D01 | Blocking frequency pilot filter 1 | | | HLD | 3/3 | 5.2 | **840D** |
| Hz | 3500.0 | 10.0 | 7999.0 | FLOAT | | immediately | |

| 5269 | **FFW_FCTRL_FIL_1_BW** [n] 0 ...7 Index of param. set | | | | | CR: **/FBHLA/** | |
|---|---|---|---|---|---|---|---|
| D01 | Bandwidth pilot filter 1 | | | HLD | 3/3 | 5.2 | **840D** |
| Hz | 500.0 | 5.0 | 7999.0 | FLOAT | | immediately | |

| 5270 | **FFW_FCTRL_FIL_1_BW_NUM** [n] 0 ...7 Index of param. set | | | | | CR: **/FBHLA/** | |
|---|---|---|---|---|---|---|---|
| D01 | Counter bandwidth pilot filter 1 | | | HLD | 3/3 | 5.2 | **840D** |
| Hz | 0.0 | 0.0 | 7999.0 | FLOAT | | immediately | |

| 5280 | **NUM_OUTPUT_FILTERS** [n] 0 ...7 Index of param. set | | | | | CR: **/FBHLA/** | |
|---|---|---|---|---|---|---|---|
| D01 | Number of manipulated value filters | | | HLD | 3/3 | 5.2 | **840D** |
| - | 0 | 0 | 1 | UNS. WORD | | immediately | |

| 5281 | **OUTPUT_FILTER_TYPE** [n] 0 ...7 Index of param. set | | | | | CR: **/FBHLA/** | |
|---|---|---|---|---|---|---|---|
| D01 | Type of manipulated value filter | | | HLD | 3/3 | 5.2 | **840D** |
| HEX | 0 | 0 | 1 | UNS. WORD | | immediately | |

| 5284 | **OUTPUT_FIL_1_FREQ** [n] 0 ...7 Index of param. set | | | | | CR: **/FBHLA/** | |
|---|---|---|---|---|---|---|---|
| D01 | Natural frequency of manipulated value filter 1 | | | HLD | 3/3 | 5.2 | **840D** |
| Hz | 1000.0 | 10.0 | 8000.0 | FLOAT | | immediately | |

| 5285 | **OUTPUT_FIL_1_DAMP** [n] 0 ...7 Index of param. set | | | | | CR: **/FBHLA/** | |
|---|---|---|---|---|---|---|---|
| D01 | Damping manipulated value filter 1 | | | HLD | 3/3 | 5.2 | **840D** |
| - | 1.0 | 0.05 | 1.0 | FLOAT | | immediately | |

© Siemens AG 2004 All Rights Reserved

| 5288 | OUTPUT_FIL_1_SUP_FREQ [n] 0 ...7 Index of param. set | | | | | CR: /FBHLA/ | |
|---|---|---|---|---|---|---|---|
| D01 | Blocking frequency manipulated value filter 1 | | | HLD | 3/3 | 5.2 | 840D |
| Hz | 3500.0 | 1.0 | 7999.0 | FLOAT | | immediately | |

| 5289 | OUTPUT_FIL_1_BW [n] 0 ...7 Index of param. set | | | | | CR: /FBHLA/ | |
|---|---|---|---|---|---|---|---|
| D01 | Bandwidth manipulated value filter 1 | | | HLD | 3/3 | 5.2 | 840D |
| Hz | 500.0 | 5.0 | 7999.0 | FLOAT | | immediately | |

| 5290 | OUTPUT_FIL_1_BW_NUM [n] 0 ...7 Index of param. set | | | | | CR: /FBHLA/ | |
|---|---|---|---|---|---|---|---|
| D01 | Numerator bandwidth manipulated value filter 1 | | | HLD | 3/3 | 5.2 | 840D |
| Hz | 0.0 | 0.0 | 7999.0 | FLOAT | | immediately | |

| 5401 | DRIVE_MAX_SPEED | | | | | CR: /FBHLA/ | |
|---|---|---|---|---|---|---|---|
| D02, D05 | Maximum useful velocity | | | HLD | 3/3 | 5.1 | 840D |
| mm/min | 0.0 | 0.0 | 120000.0 | FLOAT | | PowerOn | |

| 5402 | SPEED_CRTL_DISABLE_STOPTIME | | | | | CR: /FBHLA/ | |
|---|---|---|---|---|---|---|---|
| D02 | Deceleration time with servo disable | | | HLD | 3/3 | 5.1 | 840D |
| ms | 0.0 | 0.0 | 120000.0 | FLOAT | | immediately | |

| 5404 | POWER_DISABLE_DELAY | | | | | CR: /FBHLA/ | |
|---|---|---|---|---|---|---|---|
| D02 | Power disable timer | | | HLD | 3/3 | 5.1 | 840D |
| ms | 100 | 0 | 100000 | FLOAT | | immediately | |

| 5406 | SPEEDCTRL_GAIN_A [n] 0 ...7 Index of param. set | | | | | CR: /FBHLA/ | |
|---|---|---|---|---|---|---|---|
| D01, D08 | P gain of velocity controller A | | | HLD | 3/3 | 5.1 | 840D |
| % | 0.0 | -100.0 | 1000.0 | FLOAT | | immediately | |

| 5407 | SPEEDCTRL_GAIN [n] 0 ...7 Index of param. set | | | | | CR: /FBHLA/ | |
|---|---|---|---|---|---|---|---|
| D01, D08 | P gain of velocity controller | | | HLD | 3/3 | 5.1 | 840D |
| % | 0.0 | -100.0 | 1000.0 | FLOAT | | immediately | |

| 5408 | SPEEDCTRL_GAIN_B [n] 0 ...7 Index of param. set | | | | | CR: /FBHLA/ | |
|---|---|---|---|---|---|---|---|
| D01, D08 | P gain of velocity controller B | | | HLD | 3/3 | 5.1 | 840D |
| % | 0.0 | -100.0 | 1000.0 | FLOAT | | immediately | |

| 5409 | SPEEDCTRL_INTEGRATOR_TIME [n] 0 ...7 Index of param. set | | | | | CR: /FBHLA/ | |
|---|---|---|---|---|---|---|---|
| D01, D08 | Velocity controller reset time | | | HLD | 3/3 | 5.1 | 840D |
| ms | 50.0 | 0.0 | 2000.0 | FLOAT | | immediately | |

| 5413 | SPEEDCTRL_ADAPT_ENABLE | | | | | CR: /FBHLA/ | |
|---|---|---|---|---|---|---|---|
| D01 | Selection of velocity controller adaptation | | | HLD | 3/3 | 5.1 | 840D |
| - | 0 | 0 | 1 | UNS. WORD | | immediately | |

| 5414 | SPEEDCTRL_REF_MODEL_FREQ [n] 0 ...7 Index of param. set | | | | | CR: /FBHLA/ | |
|---|---|---|---|---|---|---|---|
| D01, EXP | Natural frequency of the reference model | | | HLD | 3/3 | 5.1 | 840D |
| Hz | 150.0 | 0.0 | 1000.0 | FLOAT | | immediately | |

| 5415 | SPEEDCTRL_REF_MODEL_DAMPING [n] 0 ...7 Index of param. set | | | | | CR: /FBHLA/ | |
|---|---|---|---|---|---|---|---|
| D01, EXP | Damping of the reference model | | | HLD | 3/3 | 5.1 | 840D |
| - | 0.9 | 0.4 | 1.0 | FLOAT | | immediately | |

| 5420 | DRIVE_MAX_SPEED_SETUP | | | | | CR: /FBHLA/ | |
|---|---|---|---|---|---|---|---|
| D02 | Maximum setup mode velocity | | | HLD | 3/3 | 5.1 | 840D |
| mm/min | 10.0 | 0.0 | 120000.0 | FLOAT | | immediately | |

| 5421 | SPEEDCTRL_INTEGRATOR_FEEDBK [n] 0 ...7 Index of param. set | | | | | CR: /FBHLA/ | |
|---|---|---|---|---|---|---|---|
| D01 | Time constant for integrator feedback | | | HLD | 3/3 | 5.1 | 840D |
| ms | 0.0 | 0.0 | 1000.0 | FLOAT | | immediately | |

© Siemens AG 2004 All Rights Reserved

| 5422 | FEEDBK_SPEED_THRESHOLD | | | | | CR: /FBHLA/ | |
|---|---|---|---|---|---|---|---|
| D01 | Speed treshold integrator feed back | | | HLD | 3/3 | 5.1 | 840D |
| mm/min | 10.0 | 0.0 | 120000.0 | FLOAT | | immediately | |

| 5430 | SPEEDCTRL_PT1_TIME [n] 0 ...7 Index of param. set | | | | | CR: /FBHLA/ | |
|---|---|---|---|---|---|---|---|
| D01 | Smoothing time constant for velocity controller | | | HLD | 3/3 | 5.1 | 840D |
| ms | 0.25 | 0.25 | 100.0 | FLOAT | | immediately | |

| 5431 | SPEEDCTRL_DIFF_TIME_A [n] 0 ...7 Index of param. set | | | | | CR: /FBHLA/ | |
|---|---|---|---|---|---|---|---|
| D01 | Lead time for velocity controller A | | | HLD | 3/3 | 5.1 | 840D |
| ms | 0.0 | -100.0 | 100.0 | FLOAT | | immediately | |

| 5432 | SPEEDCTRL_DIFF_TIME [n] 0 ...7 Index of param. set | | | | | CR: /FBHLA/ | |
|---|---|---|---|---|---|---|---|
| D01 | Lead time for velocity controller | | | HLD | 3/3 | 5.1 | 840D |
| ms | 0.0 | -100.0 | 100.0 | FLOAT | | immediately | |

| 5433 | SPEEDCTRL_DIFF_TIME_B [n] 0 ...7 Index of param. set | | | | | CR: /FBHLA/ | |
|---|---|---|---|---|---|---|---|
| D01 | Lead time for velocity controller B | | | HLD | 3/3 | 5.1 | 840D |
| ms | 0.0 | -100.0 | 100.0 | FLOAT | | immediately | |

| 5435 | CONTROLLED_SYSTEM_GAIN [n] 0 ...7 Index of param. set | | | | | CR: /FBHLA/ | |
|---|---|---|---|---|---|---|---|
| D01 | Controlled system gain | | | HLD | 3/3 | 5.1 | 840D |
| mm/Vmin | 0.0 | 0.0 | 20000.0 | FLOAT | | immediately | |

| 5440 | POS_DRIVE_SPEED_LIMIT | | | | | CR: /FBHLA/ | |
|---|---|---|---|---|---|---|---|
| D02 | Positive velocity setpoint limit | | | HLD | 3/3 | 5.1 | 840D |
| mm/min | 0.0 | 0.0 | 120000.0 | FLOAT | | immediately | |

| 5441 | NEG_DRIVE_SPEED_LIMIT | | | | | CR: /FBHLA/ | |
|---|---|---|---|---|---|---|---|
| D02 | Negative velocity setpoint limit | | | HLD | 3/3 | 5.1 | 840D |
| mm/min | 0.0 | 0.0 | 120000.0 | FLOAT | | immediately | |

| 5460 | FRICTION_COMP_GRADIENT | | | | | CR: /FBHLA/ | |
|---|---|---|---|---|---|---|---|
| D01 | Increase in friction compensation | | | HLD | 3/3 | 5.1 | 840D |
| % | 0.0 | 0.0 | 400.0 | FLOAT | | immediately | |

| 5461 | FRICTION_COMP_OUTPUT_RANGE | | | | | CR: /FBHLA/ | |
|---|---|---|---|---|---|---|---|
| D01 | Range of action of friction compensation | | | HLD | 3/3 | 5.1 | 840D |
| % | 0.1 | 0.1 | 10.0 | FLOAT | | immediately | |

| 5462 | AREA_FACTOR_POS_OUTPUT [n] 0 ...7 Index of param. set | | | | | CR: /FBHLA/ | |
|---|---|---|---|---|---|---|---|
| D01 | Positive area adaptation factor | | | HLD | 3/3 | 5.1 | 840D |
| % | 100.0 | 10.0 | 200.0 | FLOAT | | immediately | |

| 5463 | AREA_FACTOR_NEG_OUTPUT [n] 0 ...7 Index of param. set | | | | | CR: /FBHLA/ | |
|---|---|---|---|---|---|---|---|
| D01 | Negative area adaptation factor | | | HLD | 3/3 | 5.1 | 840D |
| % | 100.0 | 10.0 | 200.0 | FLOAT | | immediately | |

| 5464 | POS_DUAL_GAIN_COMP_FLOW [n] 0 ...7 Index of param. set | | | | | CR: /FBHLA/ | |
|---|---|---|---|---|---|---|---|
| D01 | Knee-point compensation of flow | | | HLD | 3/3 | 5.1 | 840D |
| % | 10.0 | 0.2 | 95.0 | FLOAT | | immediately | |

| 5465 | POS_DUAL_GAIN_COMP_VOLTAGE [n] 0 ...7 Index of param. set | | | | | CR: /FBHLA/ | |
|---|---|---|---|---|---|---|---|
| D01 | Knee-point compensation of voltage | | | HLD | 3/3 | 5.1 | 840D |
| % | 10.0 | 0.2 | 95.0 | FLOAT | | immediately | |

| 5466 | DUAL_GAIN_COMP_SMOOTH_RANGE [n] 0 ...7 Index of param. set | | | | | CR: /FBHLA/ | |
|---|---|---|---|---|---|---|---|
| D01 | Knee-point compensation of rounding area | | | HLD | 3/3 | 5.1 | 840D |
| % | 2.5 | 0.0 | 20.0 | FLOAT | | immediately | |

© Siemens AG 2004 All Rights Reserved

| **5467** | **NEG_DUAL_GAIN_COMP_FLOW** [n] 0 ...7 Index of param. set | | | | | CR: **/FBHLA/** | |
|---|---|---|---|---|---|---|---|
| D01 | Knee-point compensation neg. flow | | | HLD | 3/3 | 5.2 | **840D** |
| % | 10.0 | 0.2 | 95.0 | FLOAT | | immediately | |

| **5468** | **NEG_DUAL_GAIN_COMP_VOLTAGE** [n] 0 ...7 Index of param. set | | | | | CR: **/FBHLA/** | |
|---|---|---|---|---|---|---|---|
| D01 | Knee-point compensation neg. voltage | | | HLD | 3/3 | 5.2 | **840D** |
| % | 10.0 | 0.2 | 95.0 | FLOAT | | immediately | |

| **5470** | **OFFSET_COMPENSATION** | | | | | CR: **/FBHLA/** | |
|---|---|---|---|---|---|---|---|
| D01 | Offset compensation | | | HLD | 3/3 | 5.1 | **840D** |
| - | 0 | -4000 | 4000 | WORD | | immediately | |

| **5474** | **OUTPUT_VOLTAGE_POS_LIMIT** [n] 0 ...7 Index of param. set | | | | | CR: **/FBHLA/** | |
|---|---|---|---|---|---|---|---|
| D02 | Actuating voltage limitation | | | HLD | 3/3 | 6.4 | **840D** |
| V | 10.0 | 0.0 | 10.0 | FLOAT | | immediately | |

| **5475** | **OUTPUT_VOLTAGE_NEG_LIMIT** [n] 0 ...7 Index of param. set | | | | | CR: **/FBHLA/** | |
|---|---|---|---|---|---|---|---|
| D02 | Actuating voltage limitation | | | HLD | 3/3 | 5.1 | **840D** |
| V | 10.0 | 0.0 | 10.0 | FLOAT | | immediately | |

| **5476** | **OUTPUT_VOLTAGE_INVERSION** | | | | | CR: **/FBHLA/** | |
|---|---|---|---|---|---|---|---|
| D01 | Manipulated variable inversion | | | HLD | 3/3 | 5.1 | **840D** |
| HEX | 0 | 0 | 1 | UNS. WORD | | immediately | |

| **5480** | **POS_DUAL_GAIN_COMP_Z_FLOW** [n] 0 ...7 Index of param. set | | | | | CR: **/FBHLA/** | |
|---|---|---|---|---|---|---|---|
| D01 | Knee-point compensation pos. flow zero range | | | HLD | 3/3 | 5.2 | **840D** |
| % | 0.01 | 0.01 | 95.0 | FLOAT | | immediately | |

| **5481** | **POS_DUAL_GAIN_COMP_Z_VOLT** [n] 0 ...7 Index of param. set | | | | | CR: **/FBHLA/** | |
|---|---|---|---|---|---|---|---|
| D01 | Knee-point compensation pos. voltage zero range | | | HLD | 3/3 | 5.2 | **840D** |
| % | 0.0 | 0.0 | 95.0 | FLOAT | | immediately | |

| **5482** | **DUAL_GAIN_COMP_SMOOTH_Z_R** [n] 0 ...7 Index of param. set | | | | | CR: **/FBHLA/** | |
|---|---|---|---|---|---|---|---|
| D01 | Knee-point compensation rounding zero range | | | HLD | 3/3 | 5.2 | **840D** |
| % | 0.0 | 0.0 | 10.0 | FLOAT | | immediately | |

| **5483** | **NEG_DUAL_GAIN_COMP_Z_FLOW** [n] 0 ...7 Index of param. set | | | | | CR: **/FBHLA/** | |
|---|---|---|---|---|---|---|---|
| D01 | Knee-point compensation neg. flow zero range | | | HLD | 3/3 | 5.2 | **840D** |
| % | 0.01 | 0.01 | 95.0 | FLOAT | | immediately | |

| **5484** | **NEG_DUAL_GAIN_COMP_Z_VOLT** [n] 0 ...7 Index of param. set | | | | | CR: **/FBHLA/** | |
|---|---|---|---|---|---|---|---|
| D01 | Knee-point compensation neg. voltage zero range | | | HLD | 3/3 | 5.2 | **840D** |
| % | 0.0 | 0.0 | 95.0 | FLOAT | | immediately | |

| **5485** | **POS_DUAL_GAIN_COMP_S_FLOW** [n] 0 ...7 Index of param. set | | | | | CR: **/FBHLA/** | |
|---|---|---|---|---|---|---|---|
| D01 | Knee-point compensation pos. flow saturation | | | HLD | 3/3 | 5.2 | **840D** |
| % | 100.0 | 0.2 | 100.0 | FLOAT | | immediately | |

| **5486** | **POS_DUAL_GAIN_COMP_S_VOLT** [n] 0 ...7 Index of param. set | | | | | CR: **/FBHLA/** | |
|---|---|---|---|---|---|---|---|
| D01 | Knee-point compensation pos. voltage saturation | | | HLD | 3/3 | 5.2 | **840D** |
| % | 100.0 | 0.2 | 100.0 | FLOAT | | immediately | |

| **5487** | **NEG_DUAL_GAIN_COMP_S_FLOW** [n] 0 ...7 Index of param. set | | | | | CR: **/FBHLA/** | |
|---|---|---|---|---|---|---|---|
| D01 | Knee-point compensation neg. flow saturation | | | HLD | 3/3 | 5.2 | **840D** |
| % | 100.0 | 0.2 | 100.0 | FLOAT | | immediately | |

| **5488** | **NEG_DUAL_GAIN_COMP_S_VOLT** [n] 0 ...7 Index of param. set | | | | | CR: **/FBHLA/** | |
|---|---|---|---|---|---|---|---|
| D01 | Knee-point compensation neg. voltage saturation | | | HLD | 3/3 | 5.2 | **840D** |
| % | 100.0 | 0.2 | 100.0 | FLOAT | | immediately | |

© Siemens AG 2004 All Rights Reserved

| 5500 | NUM_SPEED_FILTERS [n] 0 ...7 Index of param. set | | | | | CR: /FBHLA/ | |
|---|---|---|---|---|---|---|---|
| D01 | Number of velocity filters | | | HLD | 3/3 | 5.1 | 840D |
| - | 0 | 0 | 1 | UNS. WORD | | immediately | |

| 5501 | SPEED_FILTER_TYPE [n] 0 ...7 Index of param. set | | | | | CR: /FBHLA/ | |
|---|---|---|---|---|---|---|---|
| D01 | Type of velocity filter | | | HLD | 3/3 | 5.1 | 840D |
| HEX | 0 | 0 | 257 | UNS. WORD | | immediately | |

| 5502 | SPEED_FILTER_1_TIME [n] 0 ...7 Index of param. set | | | | | CR: /FBHLA/ | |
|---|---|---|---|---|---|---|---|
| D01 | PT1 time constant of velocity filter 1 | | | HLD | 3/3 | 5.1 | 840D |
| ms | 0.0 | 0.0 | 500.0 | FLOAT | | immediately | |

| 5506 | SPEED_FILTER_1_FREQUENCY [n] 0 ...7 Index of param. set | | | | | CR: /FBHLA/ | |
|---|---|---|---|---|---|---|---|
| D01 | PT 2 natural frequency of velocity filter 1 | | | HLD | 3/3 | 5.1 | 840D |
| Hz | 2000.0 | 10.0 | 8000.0 | FLOAT | | immediately | |

| 5507 | SPEED_FILTER_1_DAMPING [n] 0 ...7 Index of param. set | | | | | CR: /FBHLA/ | |
|---|---|---|---|---|---|---|---|
| D01 | PT2 damping of velocity filter 1 | | | HLD | 3/3 | 5.1 | 840D |
| - | 0.7 | 0.2 | 1.0 | FLOAT | | immediately | |

| 5514 | SPEED_FILTER_1_SUPPR_FREQ [n] 0 ...7 Index of param. set | | | | | CR: /FBHLA/ | |
|---|---|---|---|---|---|---|---|
| D01 | BSF blocking frequency of velocity filter 1 | | | HLD | 3/3 | 5.1 | 840D |
| Hz | 3500.0 | 10.0 | 7999.0 | FLOAT | | immediately | |

| 5515 | SPEED_FILTER_1_BANDWIDTH [n] 0 ...7 Index of param. set | | | | | CR: /FBHLA/ | |
|---|---|---|---|---|---|---|---|
| D01 | BSF bandwidth of velocity filter 1 | | | HLD | 3/3 | 5.1 | 840D |
| Hz | 500.0 | 5.0 | 7999.0 | FLOAT | | immediately | |

| 5516 | SPEED_FILTER_1_BW_NUMERATOR [n] 0 ...7 Index of param. set | | | | | CR: /FBHLA/ | |
|---|---|---|---|---|---|---|---|
| D01 | Numerator bandwidth of velocity filter 1 | | | HLD | 3/3 | 5.1 | 840D |
| Hz | 0.0 | 0.0 | 7999.0 | FLOAT | | immediately | |

| 5520 | SPEED_FILTER_1_BS_FREQ [n] 0 ...7 Index of param. set | | | | | CR: /FBHLA/ | |
|---|---|---|---|---|---|---|---|
| D01 | BSF natural frequency of velocity filter 1 | | | HLD | 3/3 | 5.1 | 840D |
| % | 100.0 | 1.0 | 141.0 | FLOAT | | immediately | |

| 5522 | ACT_SPEED_FILTER_TIME | | | | | CR: /FBHLA/ | |
|---|---|---|---|---|---|---|---|
| D01 | Time constant velocity actual value filter | | | HLD | 3/3 | 5.1 | 840D |
| HEX | 0 | 0 | 0 | UNS. WORD | | PowerOn | |

| 5530 | CYLINDER_SAFETY_CONFIG | | | | | CR: /FBHLA/ | |
|---|---|---|---|---|---|---|---|
| D05, D02 | Safety circuit | | | HLD | 3/3 | 5.1 | 840D |
| HEX | 4 | 0 | 3F | UNS. WORD | | immediately | |

| 5531 | OUTPUT_ENABLE_DELAY | | | | | CR: /FBHLA/ | |
|---|---|---|---|---|---|---|---|
| D02 | Manipulated variable blocking time | | | HLD | 3/3 | 5.1 | 840D |
| ms | 300 | 0 | 500 | UNS. WORD | | immediately | |

| 5532 | POWER_ENABLE_DELAY | | | | | CR: /FBHLA/ | |
|---|---|---|---|---|---|---|---|
| D02 | Power enable blocking time | | | HLD | 3/3 | 5.1 | 840D |
| ms | 100 | 0 | 300 | UNS. WORD | | immediately | |

| 5550 | PRESSURE_SENS_A_REF | | | | | CR: /FBHLA/ | |
|---|---|---|---|---|---|---|---|
| D06 | Reference value of pressure sensor A at 10 V | | | HLD | 3/3 | 5.1 | 840D |
| bar | 200.0 | 50.0 | 6000.0 | FLOAT | | immediately | |

| 5551 | PRESSURE_SENS_A_OFFS | | | | | CR: /FBHLA/ | |
|---|---|---|---|---|---|---|---|
| D06 | Offset compensation for pressure sensor A | | | HLD | 3/3 | 5.1 | 840D |
| - | 0 | -32760 | 32760 | WORD | | immediately | |

© Siemens AG 2004 All Rights Reserved

| 5552 | PRESSURE_SENS_B_REF | | | | | CR: /FBHLA/ | |
|---|---|---|---|---|---|---|---|
| D06 | Reference value of pressure sensor B at 10V | | | HLD | 3/3 | 5.1 | 840D |
| bar | 200.0 | 50.0 | 6000.0 | FLOAT | | immediately | |

| 5553 | PRESSURE_SENS_B_OFFS | | | | | CR: /FBHLA/ | |
|---|---|---|---|---|---|---|---|
| D06 | Offset compensation for pressure sensor B | | | HLD | 3/3 | 5.1 | 840D |
| - | 0 | -32767 | 32767 | WORD | | immediately | |

| 5600 | ALARM_MASK_POWER_ON | | | | | CR: /FBHLA/ | |
|---|---|---|---|---|---|---|---|
| D02, EXP | Concealable alarms (Power On) | | | HLD | 3/3 | 5.1 | 840D |
| HEX | 0 | 0 | FFFF | UNS. WORD | | immediately | |

| 5601 | ALARM_MASK_RESET | | | | | CR: /FBHLA/ | |
|---|---|---|---|---|---|---|---|
| D02, EXP | Concealable alarms (Reset) | | | HLD | 3/3 | 5.1 | 840D |
| HEX | 0 | 0 | FFFF | UNS. WORD | | immediately | |

| 5605 | SPEEDCTRL_LIMIT_TIME | | | | | CR: /FBHLA/ | |
|---|---|---|---|---|---|---|---|
| D02 | Time limit of velocity controller | | | HLD | 3/3 | 5.1 | 840D |
| ms | 200.0 | 20.0 | 1000.0 | FLOAT | | immediately | |

| 5606 | SPEEDCTRL_LIMIT_THRESHOLD | | | | | CR: /FBHLA/ | |
|---|---|---|---|---|---|---|---|
| D02 | Threshold limit of velocity controller | | | HLD | 3/3 | 5.1 | 840D |
| mm/min | 120000.0 | 0.0 | 120000.0 | FLOAT | | immediately | |

| 5609 | ENC_SPEED_LIMIT | | | | | CR: /FBHLA/ | |
|---|---|---|---|---|---|---|---|
| D06, d02 | Maximum measuring velocity of linear scale | | | HLD | 3/3 | 5.1 | 840D |
| mm/min | 240000.0 | 1.0 | 240000.0 | FLOAT | | immediately | |

| 5610 | DIAGNOSIS_ACTIVATION_FLAGS | | | | | CR: /FBHLA/ | |
|---|---|---|---|---|---|---|---|
| EXP | Diagnostic functions | | | HLD | 3/3 | 5.1 | 840D |
| HEX | 0 | 0 | 3 | UNS. WORD | | PowerOn | |

| 5612 | ALARM_REACTION_POWER_ON | | | | | CR: /FBHLA/ | |
|---|---|---|---|---|---|---|---|
| D02 | Configurable shutdown reaction with PO alarms | | | HLD | 3/3 | 5.1 | 840D |
| HEX | 0 | 0 | FFFF | UNS. WORD | | immediately | |

| 5613 | ALARM_REACTION_RESET | | | | | CR: /FBHLA/ | |
|---|---|---|---|---|---|---|---|
| D02 | Configurable shutdown reaction with RESET alarms | | | HLD | 3/3 | 5.1 | 840D |
| HEX | 0 | 0 | FFFF | UNS. WORD | | immediately | |

| 5614 | VALVE_ERROR_TIME | | | | | CR: /FBHLA/ | |
|---|---|---|---|---|---|---|---|
| D02 | Valve spool monitoring timer | | | HLD | 3/3 | 5.1 | 840D |
| ms | 50 | 1 | 100 | UNS. WORD | | immediately | |

| 5620 | PROG_SIGNAL_FLAGS | | | | | CR: /FBHLA/ | |
|---|---|---|---|---|---|---|---|
| D03 | Bits of variable signaling functions | | | HLD | 3/3 | 5.1 | 840D |
| HEX | 0 | 0 | 7 | UNS. WORD | | immediately | |

| 5621 | PROG_SIGNAL_NR | | | | | CR: /FBHLA/ | |
|---|---|---|---|---|---|---|---|
| D03 | Signal number of variable signaling function | | | HLD | 3/3 | 5.1 | 840D |
| - | 0 | 0 | 100 | UNS. WORD | | immediately | |

| 5622 | PROG_SIGNAL_ADDRESS | | | | | CR: /FBHLA/ | |
|---|---|---|---|---|---|---|---|
| D03 | Address of variable signaling functions | | | HLD | 3/3 | 5.1 | 840D |
| HEX | 0 | 0 | FFFFFF | UNS. DWORD | | immediately | |

| 5623 | PROG_SIGNAL_THRESHOLD | | | | | CR: /FBHLA/ | |
|---|---|---|---|---|---|---|---|
| D03 | Threshold of variable signaling functions | | | HLD | 3/3 | 5.1 | 840D |
| HEX | 0 | 0 | FFFFFF | UNS. DWORD | | immediately | |

© Siemens AG 2004 All Rights Reserved

| 5624 | PROG_SIGNAL_HYSTERESIS | | | | | CR: /FBHLA/ | |
|---|---|---|---|---|---|---|---|
| D03 | Hysteresis of variable signaling functions | | | HLD | 3/3 | 5.1 | 840D |
| HEX | 0 | 0 | FFFFFF | UNS. DWORD | | immediately | |

| 5625 | PROG_SIGNAL_ON_DELAY | | | | | CR: /FBHLA/ | |
|---|---|---|---|---|---|---|---|
| D03 | Pickup delay of variable signaling function | | | HLD | 3/3 | 5.1 | 840D |
| - | 0 | 0 | 10000 | UNS. WORD | | immediately | |

| 5626 | PROG_SIGNAL_OFF_DELAY | | | | | CR: /FBHLA/ | |
|---|---|---|---|---|---|---|---|
| D03 | Dropout delay of variable signaling function | | | HLD | 3/3 | 5.1 | 840D |
| - | 0 | 0 | 10000 | UNS. WORD | | immediately | |

| 5648 | VALVE_ID_PARAMS1 [n] 0 ...7 Index of param. set | | | | | CR: /FBHLA/ | |
|---|---|---|---|---|---|---|---|
| D04, EXP | Valve-Idi-Parameter2 | | | HLD | 3/3 | 6.1 | 840D |
| - | 0 | 0 | 7999 | UNS. WORD | | immediately | |

| 5649 | VALVE_ID_PARAMS2 [n] 0 ...7 Index of param. set | | | | | CR: /FBHLA/ | |
|---|---|---|---|---|---|---|---|
| D04, EXP | Valve-Idi-Parameter2 | | | HLD | 3/3 | 6.1 | 840D |
| - | 0 | 0 | 7999 | UNS. WORD | | immediately | |

| 5650 | DIAGNOSIS_CONTROL_FLAGS | | | | | CR: /FBHLA/ | |
|---|---|---|---|---|---|---|---|
| D04, EXP | Diagnostic control | | | HLD | 3/3 | 5.1 | 840D |
| HEX | 0 | 0 | FFFF | UNS. WORD | | immediately | |

| 5651 | MINMAX_SIGNAL_NR | | | | | CR: /FBHLA/ | |
|---|---|---|---|---|---|---|---|
| D04, EXP | Signal number of min./max. storage | | | HLD | 3/3 | 5.1 | 840D |
| - | 0 | 0 | FFFF | UNS. WORD | | immediately | |

| 5652 | MINMAX_ADDRESS | | | | | CR: /FBHLA/ | |
|---|---|---|---|---|---|---|---|
| D04, EXP | Storage location of min./max. storage | | | HLD | 3/3 | 5.1 | 840D |
| HEX | 0 | 0 | FFFFFF | UNS. DWORD | | immediately | |

| 5653 | MINMAX_MIN_VALUE | | | | | CR: /FBHLA/ | |
|---|---|---|---|---|---|---|---|
| D04, EXP | Minimum value of min./max. storage | | | HLD | 3/3 | 5.1 | 840D |
| HEX | 0 | 0 | FFFFFF | UNS. DWORD | | immediately | |

| 5654 | MINMAX_MAX_VALUE | | | | | CR: /FBHLA/ | |
|---|---|---|---|---|---|---|---|
| D04, EXP | Maximum value of min./max. storage | | | HLD | 3/3 | 5.1 | 840D |
| HEX | 0 | 0 | FFFFFF | UNS. DWORD | | immediately | |

| 5655 | MONITOR_SEGMENT | | | | | CR: /FBHLA/ | |
|---|---|---|---|---|---|---|---|
| D04, EXP | Monitor storage location segment | | | HLD | 3/3 | 5.1 | 840D |
| HEX | 0 | 0 | FFFF | UNS. WORD | | immediately | |

| 5656 | MONITOR_ADDRESS | | | | | CR: /FBHLA/ | |
|---|---|---|---|---|---|---|---|
| D04, EXP | Monitor storage location address | | | HLD | 3/3 | 5.1 | 840D |
| HEX | 0 | 0 | FFFFFF | UNS. DWORD | | immediately | |

| 5657 | MONITOR_DISPLAY | | | | | CR: /FBHLA/ | |
|---|---|---|---|---|---|---|---|
| D04, EXP | Monitor value display | | | HLD | 3/3 | 5.1 | 840D |
| HEX | 0 | 0 | FFFFFF | UNS. DWORD | | immediately | |

| 5658 | MONITOR_INPUT_VALUE | | | | | CR: /FBHLA/ | |
|---|---|---|---|---|---|---|---|
| D04, EXP | Monitor value input | | | HLD | 3/3 | 5.1 | 840D |
| HEX | 0 | 0 | FFFFFF | UNS. DWORD | | immediately | |

| 5659 | MONITOR_INPUT_STROBE | | | | | CR: /FBHLA/ | |
|---|---|---|---|---|---|---|---|
| D04, EXP | Monitor value accept | | | HLD | 3/3 | 5.1 | 840D |
| HEX | 0 | 0 | FFFF | UNS. WORD | | immediately | |

© Siemens AG 2004 All Rights Reserved

| 5700 | TERMINAL_STATE | | | | | CR: /FBHLA/ | |
|---|---|---|---|---|---|---|---|
| D04 | Status of binary inputs | | | HLD | 3/3 | 5.1 | 840D |
| HEX | 0 | 0 | FFFF | UNS. WORD | | immediately | |

| 5704 | ACTUAL_PRESSURE_A | | | | | CR: /FBHLA/ | |
|---|---|---|---|---|---|---|---|
| D04 | Actual pressure value A | | | HLD | 3/3 | 5.1 | 840D |
| bar | 0.0 | -10000.0 | 10000.0 | FLOAT | | immediately | |

| 5705 | ACTUAL_PRESSURE_B | | | | | CR: /FBHLA/ | |
|---|---|---|---|---|---|---|---|
| D04 | Actual pressure value B | | | HLD | 3/3 | 5.1 | 840D |
| bar | 0.0 | -10000.0 | 10000.0 | FLOAT | | immediately | |

| 5706 | DESIRED_SPEED | | | | | CR: /FBHLA/ | |
|---|---|---|---|---|---|---|---|
| D04 | Velocity setpoint | | | HLD | 3/3 | 5.1 | 840D |
| mm/min | 0.0 | -240000.0 | 240000.0 | FLOAT | | immediately | |

| 5707 | ACTUAL_SPEED | | | | | CR: /FBHLA/ | |
|---|---|---|---|---|---|---|---|
| D04 | Actual velocity value | | | HLD | 3/3 | 5.1 | 840D |
| mm/min | 0.0 | -240000.0 | 240000.0 | FLOAT | | immediately | |

| 5708 | ACTUAL_CYL_FORCE | | | | | CR: /FBHLA/ | |
|---|---|---|---|---|---|---|---|
| D04 | Actual cylinder force value | | | HLD | 3/3 | 5.1 | 840D |
| N | 0.0 | -1000000000.0 | 1000000000.0 | FLOAT | | immediately | |

| 5709 | VOLTAGE_LSB | | | | | CR: /FBHLA/ | |
|---|---|---|---|---|---|---|---|
| EXP | Significance of voltage display | | | HLD | 3/3 | 5.1 | 840D |
| V | 0.0 | -100000.0 | 100000.0 | FLOAT | | immediately | |

| 5710 | PRESSURE_LSB | | | | | CR: /FBHLA/ | |
|---|---|---|---|---|---|---|---|
| EXP | Significance of pressure display | | | HLD | 3/3 | 5.1 | 840D |
| bar | 0.0 | -240000.0 | 240000.0 | FLOAT | | immediately | |

| 5711 | SPEED_LSB | | | | | CR: /FBHLA/ | |
|---|---|---|---|---|---|---|---|
| EXP | Significance of velocity display | | | HLD | 3/3 | 5.1 | 840D |
| mm/min | 0.0 | -240000.0 | 240000.0 | FLOAT | | immediately | |

| 5713 | FORCE_LSB | | | | | CR: /FBHLA/ | |
|---|---|---|---|---|---|---|---|
| EXP | Significance of power display | | | HLD | 3/3 | 5.1 | 840D |
| uN | 0.0 | -10000000.0 | 10000000.0 | FLOAT | | immediately | |

| 5714 | POSITION_LSB | | | | | CR: /FBHLA/ | |
|---|---|---|---|---|---|---|---|
| EXP | Significance of position display | | | HLD | 3/3 | 5.1 | 840D |
| nm | 0.0 | -1000000.0 | 1000000.0 | FLOAT | | immediately | |

| 5715 | DESIRED_VALVE_SPOOL_POS | | | | | CR: /FBHLA/ | |
|---|---|---|---|---|---|---|---|
| D04 | Valve spool position setpoint voltage | | | HLD | 3/3 | 5.1 | 840D |
| V | 0.0 | -10.0 | 10.0 | FLOAT | | immediately | |

| 5716 | ACTUAL_VALVE_SPOOL_POS | | | | | CR: /FBHLA/ | |
|---|---|---|---|---|---|---|---|
| D04 | Voltage for actual valve spool position value | | | HLD | 3/3 | 5.1 | 840D |
| V | 0.0 | -10.0 | 10.0 | FLOAT | | immediately | |

| 5717 | DESIRED_CYL_FORCE | | | | | CR: /FBHLA/ | |
|---|---|---|---|---|---|---|---|
| D04 | Desired cylinder power | | | HLD | 3/3 | 5.1 | 840D |
| N | 0.0 | -1000000000.0 | 1000000000.0 | FLOAT | | immediately | |

| 5720 | CRC_DIAGNOSIS | | | | | CR: /FBHLA/ | |
|---|---|---|---|---|---|---|---|
| D04, EXP | CRC diagnostic parameters | | | HLD | 3/3 | 5.1 | 840D |
| - | 0 | 0 | FFFF | UNS. WORD | | immediately | |

© Siemens AG 2004 All Rights Reserved

| 5725 | MAX_FORCE_FROM_NC | | | | | CR: /FBHLA/ | |
|---|---|---|---|---|---|---|---|
| D04, EXP | Standardization of the power setpoint interface | | | HLD | 3/3 | 5.1 | 840D |
| N | 0.0 | 0.0 | 1000000000.0 | FLOAT | | immediately | |

| 5730 | OPERATING_MODE | | | | | CR: /FBHLA/ | |
|---|---|---|---|---|---|---|---|
| D04 | Display of the operating mode | | | HLD | 3/3 | 5.1 | 840D |
| HEX | 1 | 1 | FFFF | UNS. WORD | | immediately | |

| 5731 | CL1_PO_IMAGE | | | | | CR: /FBHLA/ | |
|---|---|---|---|---|---|---|---|
| D04, EXP | Map of the ZK1_PO register | | | HLD | 3/3 | 5.1 | 840D |
| HEX | 0 | 0 | FFFF | UNS. WORD | | immediately | |

| 5732 | CL1_RES_IMAGE | | | | | CR: /FBHLA/ | |
|---|---|---|---|---|---|---|---|
| D04, EXP | Map of the ZK1_RES register | | | HLD | 3/3 | 5.1 | 840D |
| HEX | 0 | 0 | FFFF | UNS. WORD | | immediately | |

| 5735 | PROCESSOR_UTILIZATION | | | | | CR: /FBHLA/ | |
|---|---|---|---|---|---|---|---|
| D04, EXP | Processor load | | | HLD | 3/3 | 5.1 | 840D |
| % | 0 | 0 | FFFF | UNS. WORD | | immediately | |

| 5740 | ACTUAL_POSITION | | | | | CR: /FBHLA/ | |
|---|---|---|---|---|---|---|---|
| EXP, D04 | Actual position value in relation to machine zero | | | HLD | 3/3 | 5.1 | 840D |
| mm | 0.0 | -10000000.0 | 10000000.0 | FLOAT | | immediately | |

| 5741 | ACTUAL_PISTON_POSITION | | | | | CR: /FBHLA/ | |
|---|---|---|---|---|---|---|---|
| EXP, D04 | Piston position in relation to piston zero | | | HLD | 3/3 | 5.1 | 840D |
| mm | 0.0 | -10000000.0 | 10000000.0 | FLOAT | | immediately | |

| 5790 | ENC_TYPE | | | | | CR: /FBHLA/ | |
|---|---|---|---|---|---|---|---|
| D04, D06 | Measuring circuit type of measuring system | | | HLD | 3/3 | 5.1 | 840D |
| - | 0 | -1 | 32767 | WORD | | immediately | |

| 5797 | PBL_VERSION | | | | | CR: /FBHLA/ | |
|---|---|---|---|---|---|---|---|
| D04 | Data version | | | HLD | 3/3 | 5.1 | 840D |
| - | 0 | 0 | FFFF | UNS. WORD | | immediately | |

| 5798 | FIRMWARE_DATE | | | | | CR: /FBHLA/ | |
|---|---|---|---|---|---|---|---|
| D04 | Firmware date | | | HLD | 3/3 | 5.1 | 840D |
| - | 0 | 0 | FFFF | UNS. WORD | | immediately | |

| 5799 | FIRMWARE_VERSION | | | | | CR: /FBHLA/ | |
|---|---|---|---|---|---|---|---|
| D04 | Firmware version | | | HLD | 3/3 | 5.1 | 840D |
| - | 0 | 0 | FFFFFF | UNS. DWORD | | immediately | |

© Siemens AG 2004 All Rights Reserved

# 2.4 Machine data for operator panel

**Abbreviations**

**Targetsystems:**

| | |
|---|---|
| Adv | HMI Advanced |
| Emb | HMI Embedded |
| OP30 | OP030 |
| MT | Manual Turn |
| SM | ShopMill |
| ST | ShopTurn |

**Filter:**

| | |
|---|---|
| H01 | ShopMill |
| H02 | ShopTurn |
| H03 | ManualTurn |
| H04 | Zugriffsstufen |
| H05 | Standardmaschine |

**Note**

The distinction between generally available MDs for the operator panel and application specific MDs for ManualTurn MT, ShopMill SM and ShopTurn ST is not made any longer.

Application specific MDs are integrated in the following list ordered by number.

| **Number** | **MD Identifier** | | | Filter | **Cross Ref.:** |
|---|---|---|---|---|---|
| Unit | Name, other Information | | | Data type | Protection level |
| System | Default value | Minimum value | Maximum value | Active | SW-Version |
| **9000** | **LCD_CONTRAST** | | | H05 | **REF.:** A2 |
| - | Contrast | | | BYTE | 3/4 |
| OP30, Adv, Emb | OP30: 7, Adv: , Emb: 0 | 0 | 15 | Power On | - |
| **9001** | **DISPLAY_TYPE** | | | H05 | **REF.:** A2 |
| - | Type of operator panel | | | BYTE | 0/0 |
| OP30, Adv, Emb | OP30: 1, Adv: 1, Emb: 1 | 0 | 2 | Power On | |
| **9002** | **DISPLAY_MODE** | | | | **REF.:** A2 |
| - | External monitor (1: monochrome; 2: color) | | | BYTE | 3/4 |
| OP30, | OP30: 0, | 0 | 2 | Power On | 1 |

© Siemens AG 2004 All Rights Reserved

| **9003** | **FIRST_LANGUAGE** | | | H05 | **REF.:** A2 |
|---|---|---|---|---|---|
| - | Foreground language | | | BYTE | 3/4 |
| OP30, Emb | OP30: 1, Emb: 1 | 1 | 2 | Power On | 1.1 |

| **9004** | **DISPLAY_RESOLUTION** | | | H05 | **REF.:** A2 |
|---|---|---|---|---|---|
| - | Display resolution | | | BYTE | 3/4 |
| OP30, Adv, Emb | OP30: 3, Adv: 3, Emb: 3 | 0 | 5 | IMMEDIATELY | - |

| **9004** | **DISPLAY_RESOLUTION** | | | H05 | **REF.:** A2 |
|---|---|---|---|---|---|
| - | Display resolution | | | BYTE | 3/4 |
| OP30, Adv, Emb | OP30: 3, Adv: 3, Emb: 3 | 0 | 5 | Power On | - |

| **9005** | **PRG_DEFAULT_DIR** | | | H05 | **REF.:** A2 |
|---|---|---|---|---|---|
| - | Basic setting program directory | | | BYTE | 3/4 |
| OP30, Emb | OP30: 1, Emb: 1 | 1 | 5 | IMMEDIATELY | - |

| **9006** | **DISPLAY_BLACK_TIME** | | | H05 | **REF.:** A2 |
|---|---|---|---|---|---|
| - | Time for screen saver | | | BYTE | 3/4 |
| OP30, Emb | OP30: 15, Emb: 15 | 0 | 60 | Power On | SW2 |

| **9007** | **TABULATOR_SIZE** | | | H05 | **REF.:** A2 |
|---|---|---|---|---|---|
| - | Tab length | | | BYTE | 3/4 |
| OP30, Emb | OP30: 4, Emb: 4 | 0 | 30 | IMMEDIATELY | SW2 |

| **9008** | **KEYBOARD_TYPE** | | | H05 | **REF.:** A2 |
|---|---|---|---|---|---|
| - | Type of keyboard<br>( 0: OP, 1: MFII/QWERTY) | | | BYTE | 3/4 |
| Adv, Emb | Adv: 0, Emb: 0 | 0 | 1 | Power On | SW3.6 |

| **9009** | **KEYBOARD_STATE** | | | H05 | **REF.:** A2 |
|---|---|---|---|---|---|
| - | Keyboard shift behavior at booting<br>(0: Single, 2: CAPSLOCK) | | | BYTE | 3/4 |
| Adv, Emb | Adv: 0, Emb: 2 | 0 | 2 | Power On | SW3.6 |

| **9010** | **SPIND_DISPLAY_RESOLUTION** | | | H05 | **REF.:** A2 |
|---|---|---|---|---|---|
| - | Display resolution for spindle values | | | BYTE | 3/4 |
| Adv | Adv: 3 | 0 | 5 | IMMEDIATELY | SW 4 |

| **9011** | **DISPLAY_RESOLUTION_INCH** | | | H05 | **REF.:** A2 |
|---|---|---|---|---|---|
| - | Disp. resolution for INCH meas. system | | | BYTE | 3/4 |
| Adv, Emb | Adv: 4, Emb: 4 | 0 | 6 | IMMEDIATELY | SW 5.1 |

| **9011** | **DISPLAY_RESOLUTION_INCH** | | | H05 | **REF.:** A2 |
|---|---|---|---|---|---|
| - | Disp. resolution for INCH meas. system | | | BYTE | 3/4 |
| Adv, Emb | Adv: 4, Emb: 4 | 0 | 6 | Power On | SW 5.1 |

| **9012** | **ACTION_LOG_MODE** | | | H05 | **REF.:** IM1, IM3, IM4 |
|---|---|---|---|---|---|
| - | Set action mode for trip recorder | | | INTEGER | 1/1 |
| Adv, Emb | Adv: 0xFE, Emb: 254 | 0 | 0xFFFF | Power On | 5.2 |

© Siemens AG 2004 All Rights Reserved

| **9013** | **SYS_CLOCK_SYNC_TIME** | | | H05 | **REF.:** IM1 |
|---|---|---|---|---|---|
| - | Synchronization time MMC/HMI time with PLC<br>Synchr. Time for HMI / PLC time | | | REAL | 0/0 |
| Emb | Emb: 0 | 0 | 199 | Power On | 5.3 |

| **9014** | **USE_CHANNEL_DISPLAY_DATA** | | | H05 | **REF.:** FBT, FBSP, EMB, ADV |
|---|---|---|---|---|---|
| - | Use channel-specific display MDs | | | INTEGER | 3/4 |
| Adv, Emb | Adv: 0, Emb: 0 | 0 | 1 | IMMEDIATELY | 6.3 |

| **9015** | **DARKTIME_TO_PLC** | | | | **REF.:** - |
|---|---|---|---|---|---|
| - | | | | BOOL | 3/4 |
| OP30, | OP30: 0, | *** | *** | Power On | SW 5 |

| **9016** | **SWITCH_TO_AREA** | | | H05 | **REF.:** IAM, BE1 |
|---|---|---|---|---|---|
| - | Default ramp-up menu selectable | | | INTEGER | 3/4 |
| OP30, Emb | OP30: 20, Emb: -1 | -1 | 10000 | Power On | SW 5, Erw. 6.3 |

| **9017** | **PLC_HOTKEY** | | | | **REF.:** FBO |
|---|---|---|---|---|---|
| - | | | | STRING | 3/4 |
| OP30, | OP30: DB0.DBB0.0, | *** | *** | Power On | |

| **9020** | **TECHNOLOGY** | | | H05 | **REF.:** A2, FBT |
|---|---|---|---|---|---|
| - | Technology for NC prog. and simulation<br>0: No specific assignment<br>1: Turning machine configuration<br><>1: Milling machine configuration | | | BYTE | 3/4 |
| Adv, Emb | Adv: 0, Emb: 1 | 0 | 2 | Power On | SW4.3, ST 6.1<br>SW5.1 MMC103 |

| **9021** | **LAYOUT_MODE** | | | H05 | **REF.:** IM4 |
|---|---|---|---|---|---|
| - | HMI design | | | BYTE | 3/4 |
| Adv, Emb | Adv: 1, Emb: 0 | 1 | 1 | Power On | 6.3 |

| **9021** | **LAYOUT_MODE** | | | H05 | **REF.:** IM4 |
|---|---|---|---|---|---|
| - | HMI design | | | INTEGER | 3/4 |
| Adv, Emb | Adv: 1, Emb: 0 | 0 | 1 | Power On | 6.3 |

| **9025** | **DISPLAY_BACKLIGHT** | | | | **REF.:** IM2 |
|---|---|---|---|---|---|
| - | Brightness level background lighting | | | BYTE | 3/4 |
| | HT6: 15 | 0 | 31 | Power On | 5.3 |

| **9026** | **TEACH_MODE** | | | | **REF.:** IM2 |
|---|---|---|---|---|---|
| - | Teach mode to be activated | | | REAL | 3/4 |
| | HT6: 1 | *** | *** | Power On | 5.3 |

| **9027** | **NUM_AX_SEL** | | | | **REF.:** IM2 |
|---|---|---|---|---|---|
| - | Number of axis groups for traversing keys | | | REAL | 3/4 |
| | HT6: 0 | 0 | 4 | Power On | 5.3 |

© Siemens AG 2004 All Rights Reserved

| **9030** | **EXPONENT_LIMIT** | | | H05 | **REF.:** A2 |
|---|---|---|---|---|---|
| - | Digits for represent. without exponent | | | BYTE | 3/4 |
| Emb | Emb: 6 | 0 | 20 | Power On | SW 5.1 |

| **9031** | **EXPONENT_SCIENCE** | | | H05 | **REF.:** A2 |
|---|---|---|---|---|---|
| - | Exponent in technical representation | | | BYTE | 3/4 |
| Emb | Emb: 1 | 0 | 1 | Power On | SW 5.1 |

| **9032** | **HMI_MONITOR** | | | H05 | **REF.:** FBT, FBSP, EMB, ADV |
|---|---|---|---|---|---|
| - | Define PLC data for HMI screen info | | | STRING | 2/4 |
| Adv, Emb | Adv: '', Emb: 0 | *** | *** | Power On | 6.2 |

| **9033** | **MA_DISPL_INV_DIR_SPIND_M3** | | | H05 | **REF.:** ADV |
|---|---|---|---|---|---|
| - | Display of spindle direction of rotation | | | INTEGER | 3/4 |
| Adv | Adv: 0 | 0 | 0x7FFFFFFF | IMMEDIATELY | 6.2 |

| **9034** | **MA_NUM_DISPLAYED_CHANNELS** | | | H05 | **REF.:** BAD |
|---|---|---|---|---|---|
| - | Number of machine channels displayed | | | REAL | 3/4 |
| Adv | Adv: 1 | 0 | 2 | Power On | 6.4 |

| **9050** | **STARTUP_LOGO** | | | H05 | **REF.:** FBT, FBSP, EMB, ADV |
|---|---|---|---|---|---|
| - | Activate OEM boot screen | | | BYTE | 1/4 |
| Adv, Emb | Adv: 0, Emb: 0 | 0 | 1 | Power On | 6.2 |

| **9052** | **SHOW_CHANNEL_SPANNING_STATE** | | | H05 | **REF.:** FBT, FBSP |
|---|---|---|---|---|---|
| - | Change cross-channel status display | | | BYTE | 2/4 |
| Adv, Emb | Adv: 0, Emb: 0 | 0 | 1 | Power On | 6.3 |

| **9053** | **PLC_SYMBOL_SORT** | | | H05 | **REF.:** IM4 |
|---|---|---|---|---|---|
| - | Sorting algorithm for PLC symbols | | | INTEGER | 3/4 |
| Adv, Emb | Adv: 0, Emb: 0 | 0 | 4 | IMMEDIATELY | 6.3 |

| **9054** | **PLC_SYMBOL_FILTER** | | | H05 | **REF.:** BAD, BEM |
|---|---|---|---|---|---|
| - | Filter settings for PLC symbols | | | REAL | 3/4 |
| Adv, Emb | Adv: 0, Emb: 0 | 0 | 0xFFFF | IMMEDIATELY | 6.3 |

| **9054** | **PLC_SYMBOL_FILTER** | | | H05 | **REF.:** BAD, BEM |
|---|---|---|---|---|---|
| - | Filter settings for PLC symbols | | | REAL | 3/4 |
| Adv, Emb | Adv: 0, Emb: 0 | 0 | 0xFFFF | IMMEDIATELY | 6.3 |

| **9055** | **PLC_ALARM_PICTURE** | | | H05 | **REF.:** IM4 |
|---|---|---|---|---|---|
| - | Select acknowledgement symb. of PLC alarms | | | INTEGER | 3/4 |
| Adv, Emb | Adv: 1, Emb: 1 | -1 | 1 | Power On | 6.3 |

| **9056** | **ALARM_ROTATION_CYCLE** | | | H05 | **REF.:** |
|---|---|---|---|---|---|
| - | Rotation cycle time for alarm display | | | INTEGER | 3/4 |
| Emb | Emb: 0 | 0 | 10000 | IMMEDIATELY | 6.4 |

© Siemens AG 2004 All Rights Reserved

| **9180** | **USER_CLASS_READ_TCARR** | | | H04, H05 | **REF.:** A2 |
|---|---|---|---|---|---|
| - | Protect. level read tlh offsets | | | BYTE | 3/4 |
| Emb | Emb: 7 | 0 | 7 | IMMEDIATELY | 6.1 |

| **9181** | **USER_CLASS_WRITE_TCARR** | | | H04, H05 | **REF.:** A2 |
|---|---|---|---|---|---|
| - | Protect. level write tlh offsets | | | BYTE | 3/4 |
| Emb | Emb: 7 | 0 | 7 | IMMEDIATELY | 6.1 |

| **9182** | **USER_CLASS_INCH_METRIC** | | | H04, H05 | **REF.:** EMB |
|---|---|---|---|---|---|
| - | Protect. level inch-metric switchover | | | BYTE | 3/4 |
| Emb | Emb: 7 | 0 | 7 | IMMEDIATELY | 6.2 |

| **9183** | **USER_WRITE_TOOLFRAME** | | | H04, H05 | **REF.:** A2 |
|---|---|---|---|---|---|
| - | Write toolholder protection level | | | BYTE | 3/4 |
| Adv, Emb | Adv: 7, Emb: 0 | 0 | 7 | IMMEDIATELY | 6.4 |

| **9184** | **USER_WRITE_PARTFRAME** | | | H04, H05 | **REF.:** A2 |
|---|---|---|---|---|---|
| - | Write tool ref. point protection level | | | BYTE | 3/4 |
| Adv, Emb | Adv: 7, Emb: 0 | 0 | 7 | IMMEDIATELY | 6.4 |

| **9185** | **USER_WRITE_WPFRAME** | | | H04, H05 | **REF.:** A2 |
|---|---|---|---|---|---|
| - | Write workpiece ref. point protec. level | | | BYTE | 3/4 |
| Adv, Emb | Adv: 7, Emb: 0 | 0 | 7 | IMMEDIATELY | 6.4 |

| **9186** | **USER_WRITE_CYCFRAME** | | | H04, H05 | **REF.:** A2 |
|---|---|---|---|---|---|
| - | Write cycle frame protection level | | | BYTE | 3/4 |
| Adv, Emb | Adv: 7, Emb: 0 | 0 | 7 | IMMEDIATELY | 6.4 |

| **9187** | **USER_WRITE_TRAFRAME** | | | H04, H05 | **REF.:** A2 |
|---|---|---|---|---|---|
| - | Write transformation frame protec. level | | | BYTE | 3/4 |
| Adv, Emb | Adv: 7, Emb: 0 | 0 | 7 | IMMEDIATELY | 6.4 |

| **9188** | **USER_WRITE_EXTFRAME** | | | H04, H05 | **REF.:** A2 |
|---|---|---|---|---|---|
| - | Write external WO protection level | | | BYTE | 3/4 |
| Adv, Emb | Adv: 7, Emb: 0 | 0 | 7 | IMMEDIATELY | 6.4 |

| **9200** | **USER_CLASS_READ_TOA** | | | H04, H05 | **REF.:** A2 |
|---|---|---|---|---|---|
| - | Protect. level read tool offsets | | | BYTE | 3/4 |
| OP30, Adv, Emb | OP30: 7, Adv: 7, Emb: 7 | 0 | 7 | IMMEDIATELY | - |

| **9201** | **USER_CLASS_WRITE_TOA_GEO** | | | H04, H05 | **REF.:** A2 |
|---|---|---|---|---|---|
| - | Protection level write tool geometry | | | BYTE | 3/4 |
| OP30, Adv, Emb | OP30: 7, Adv: 7, Emb: 7 | 0 | 7 | IMMEDIATELY | - |

| **9202** | **USER_CLASS_WRITE_TOA_WEAR** | | | H04, H05 | **REF.:** A2 |
|---|---|---|---|---|---|
| - | Protection level write tool wear data | | | BYTE | 3/4 |
| OP30, Adv, Emb | OP30: 7, Adv: 7, Emb: 7 | 0 | 7 | IMMEDIATELY | - |

| **9203** | **USER_CLASS_WRITE_FINE** | | | H04, H05 | **REF.:** A2 |
|---|---|---|---|---|---|
| - | Protection level fine | | | BYTE | 3/4 |
| Adv, Emb | Adv: 7, Emb: 7 | 0 | 7 | IMMEDIATELY | - |

© Siemens AG 2004 All Rights Reserved

| **9204** | **USER_CLASS_WRITE_TOA_SC** | | | H04, H05 | **REF.:** A2 |
|---|---|---|---|---|---|
| - | Change prot.level for tool sum offsets | | | BYTE | 3/4 |
| Adv | Adv: 7 | 0 | 7 | IMMEDIATELY | SW 5 |

| **9205** | **USER_CLASS_WRITE_TOA_EC** | | | H04, H05 | **REF.:** A2 |
|---|---|---|---|---|---|
| - | Prot. level change tool setup offsets | | | BYTE | 3/4 |
| Adv | Adv: 7 | 0 | 7 | IMMEDIATELY | SW 5 |

| **9206** | **USER_CLASS_WRITE_TOA_SUPVIS** | | | H04, H05 | **REF.:** A2 |
|---|---|---|---|---|---|
| - | Prot. level change tool mon. limits | | | BYTE | 3/4 |
| Adv | Adv: 7 | 0 | 7 | IMMEDIATELY | SW 5 |

| **9207** | **USER_CLASS_WRITE_TOA_ASSDNO** | | | H04, H05 | **REF.:** A2 |
|---|---|---|---|---|---|
| - | Modify assigned DNo of a tool cutting edge | | | BYTE | 3/4 |
| Adv | Adv: 7 | 0 | 7 | IMMEDIATELY | SW 5 |

| **9208** | **USER_CLASS_WRITE_MAG_WGROUP** | | | H04, H05 | **REF.:** A2 |
|---|---|---|---|---|---|
| - | Modify wear group mag. pos./magazine | | | BYTE | 3/4 |
| Adv | Adv: 7 | 0 | 7 | IMMEDIATELY | SW 5 |

| **9209** | **USER_CLASS_WRITE_TOA_ADAPT** | | | H04, H05 | **REF.:** A2 |
|---|---|---|---|---|---|
| - | Protect. level write tool adaptat. data | | | BYTE | 3/4 |
| OP30, Adv, Emb | OP30: 7, Adv: 7, Emb: 7 | 0 | 7 | IMMEDIATELY | SW5 |

| **9210** | **USER_CLASS_WRITE_ZOA** | | | H04, H05 | **REF.:** A2 |
|---|---|---|---|---|---|
| - | Write protect. level of sett. zero offs. | | | BYTE | 3/4 |
| OP30, Adv, Emb | OP30: 7, Adv: 7, Emb: 7 | 0 | 7 | IMMEDIATELY | - |

| **9211** | **USER_CLASS_READ_GUD_LUD** | | | H04, H05 | **REF.:** A2 |
|---|---|---|---|---|---|
| - | Read protection level of user variables | | | BYTE | 3/4 |
| OP30, Adv, Emb | OP30: 7, Adv: 7, Emb: 7 | 0 | 7 | IMMEDIATELY | SW6.1 |

| **9212** | **USER_CLASS_WRITE_GUD_LUD** | | | H04, H05 | **REF.:** IM1, IM3, A2 |
|---|---|---|---|---|---|
| - | Write protection level of user variables | | | BYTE | 3/4 |
| OP30, Adv, Emb | OP30: 7, Adv: 7, Emb: 7 | 0 | 7 | IMMEDIATELY | SW6.1 |

| **9213** | **USER_CLASS_OVERSTORE_HIGH** | | | H04, H05 | **REF.:** A2 |
|---|---|---|---|---|---|
| - | Protection level extended overstore | | | BYTE | 3/4 |
| OP30, Adv, Emb | OP30: 7, Adv: 7, Emb: 7 | 0 | 7 | IMMEDIATELY | - |

| **9214** | **USER_CLASS_WRITE_PRG_CONDIT** | | | H04, H05 | **REF.:** A2 |
|---|---|---|---|---|---|
| - | Protection level program control | | | BYTE | 3/4 |
| OP30, Adv, Emb | OP30: 7, Adv: 7, Emb: 7 | 0 | 7 | IMMEDIATELY | - |

| **9215** | **USER_CLASS_WRITE_SEA** | | | H04, H05 | **REF.:** A2 |
|---|---|---|---|---|---|
| - | Protection level write setting data | | | BYTE | 3/4 |
| OP30, Adv, Emb | OP30: 7, Adv: 7, Emb: 7 | 0 | 7 | IMMEDIATELY | - |

| **9216** | **USER_CLASS_READ_PROGRAM** | | | H04, H05 | **REF.:** A2 |
|---|---|---|---|---|---|
| - | Read protection level of part program | | | BYTE | 3/4 |
| OP30, Adv, Emb | OP30: 7, Adv: 7, Emb: 7 | 0 | 7 | IMMEDIATELY | - |

© Siemens AG 2004 All Rights Reserved

| **9217** | **USER_CLASS_WRITE_PROGRAM** | | | H04, H05 | **REF.:** A2 |
|---|---|---|---|---|---|
| - | Write part program protection level | | | BYTE | 3/4 |
| OP30, Adv, Emb | OP30: 7, Adv: 7, Emb: 7 | 0 | 7 | IMMEDIATELY | - |

| **9218** | **USER_CLASS_SELECT_PROGRAM** | | | H04, H05 | **REF.:** A2 |
|---|---|---|---|---|---|
| - | Protection level program selection | | | BYTE | 3/4 |
| OP30, Adv, Emb | OP30: 7, Adv: 7, Emb: 7 | 0 | 7 | IMMEDIATELY | - |

| **9219** | **USER_CLASS_TEACH_IN** | | | H04, H05 | **REF.:** A2 |
|---|---|---|---|---|---|
| - | Protection level TEACH IN | | | BYTE | 3/4 |
| OP30, Adv, Emb | OP30: 7, Adv: 7, Emb: 7 | 0 | 7 | IMMEDIATELY | - |

| **9220** | **USER_CLASS_PRESET** | | | H04, H05 | **REF.:** A2 |
|---|---|---|---|---|---|
| - | Protection level PRESET | | | BYTE | 3/4 |
| OP30, Adv, Emb | OP30: 7, Adv: 7, Emb: 7 | 0 | 7 | IMMEDIATELY | - |

| **9221** | **USER_CLASS_CLEAR_RPA** | | | H04, H05 | **REF.:** A2 |
|---|---|---|---|---|---|
| - | Protection level delete R variables | | | BYTE | 3/4 |
| OP30, Adv, Emb | OP30: 7, Adv: 7, Emb: 7 | 0 | 7 | IMMEDIATELY | - |

| **9222** | **USER_CLASS_WRITE_RPA** | | | H04, H05 | **REF.:** A2 |
|---|---|---|---|---|---|
| - | Protection level write R variables | | | BYTE | 3/4 |
| OP30, Adv, Emb | OP30: 7, Adv: 7, Emb: 7 | 0 | 7 | IMMEDIATELY | - |

| **9223** | **USER_CLASS_SET_V24** | | | H04, H05 | **REF.:** A2 |
|---|---|---|---|---|---|
| - | Prot. level RS-232-C parameterization | | | BYTE | 3/4 |
| OP30, Emb | OP30: 7, Emb: 7 | 0 | 7 | IMMEDIATELY | - |

| **9224** | **USER_CLASS_READ_IN** | | | H04, H05 | **REF.:** A2 |
|---|---|---|---|---|---|
| - | Protect. level read in data | | | BYTE | 3/4 |
| OP30, Emb | OP30: 7, Emb: 7 | 0 | 7 | IMMEDIATELY | - |

| **9225** | **USER_CLASS_READ_CST** | | | H04, H05 | **REF.:** A2 |
|---|---|---|---|---|---|
| - | Protect. level standard cycles | | | BYTE | 3/4 |
| OP30, Emb | OP30: 7, Emb: 7 | 0 | 7 | IMMEDIATELY | SW2 |

| **9226** | **USER_CLASS_READ_CUS** | | | H04, H05 | **REF.:** A2 |
|---|---|---|---|---|---|
| - | Protect. level user cycles | | | BYTE | 3/4 |
| OP30, Emb | OP30: 7, Emb: 7 | 0 | 7 | IMMEDIATELY | SW2 |

| **9227** | **USER_CLASS_SHOW_SBL2** | | | H04, H05 | **REF.:** A2 |
|---|---|---|---|---|---|
| - | Skip single block2 (SBL2) | | | BYTE | 3/4 |
| Emb | Emb: 7 | 0 | 7 | IMMEDIATELY | SW3.5 |

| **9228** | **USER_CLASS_READ_SYF** | | | H04, H05 | **REF.:** A2 |
|---|---|---|---|---|---|
| - | Access level for selecting directory SYF | | | BYTE | 3/4 |
| Emb | Emb: 7 | 0 | 7 | IMMEDIATELY | SW4.2 |

| **9229** | **USER_CLASS_READ_DEF** | | | H04, H05 | **REF.:** A2 |
|---|---|---|---|---|---|
| - | Access level for selecting directory DEF | | | BYTE | 3/4 |
| Emb | Emb: 7 | 0 | 7 | IMMEDIATELY | SW4.2 |

© Siemens AG 2004 All Rights Reserved

| **9230** | **USER_CLASS_READ_BD** | | | H04, H05 | **REF.:** A2 |
|---|---|---|---|---|---|
| - | Access level for selecting directory BD | | | BYTE | 3/4 |
| Emb | Emb: 3 | 0 | 7 | IMMEDIATELY | SW4.2 |

| **9231** | **USER_CLASS_WRITE_RPA_1** | | | H04, H05 | **REF.:** A2 |
|---|---|---|---|---|---|
| - | Protection level for the first RPA area | | | BYTE | 3/4 |
| Adv | Adv: 7 | 0 | 7 | IMMEDIATELY | SW5.1 |

| **9232** | **USER_BEGIN_WRITE_RPA_1** | | | H04, H05 | **REF.:** A2 |
|---|---|---|---|---|---|
| - | Beginning of the first RPA area | | | WORT | 3/4 |
| Adv | Adv: 0 | 0 | 0 | IMMEDIATELY | SW5.1 |

| **9233** | **USER_END_WRITE_RPA_1** | | | H04, H05 | **REF.:** A2 |
|---|---|---|---|---|---|
| - | End of the first RPA area | | | WORT | 3/4 |
| Adv | Adv: 0 | 0 | 0 | IMMEDIATELY | SW5.1 |

| **9234** | **USER_CLASS_WRITE_RPA_2** | | | H04, H05 | **REF.:** A2 |
|---|---|---|---|---|---|
| - | Protection level for the second RPA area | | | BYTE | 3/4 |
| Adv | Adv: 7 | 0 | 7 | IMMEDIATELY | SW5.1 |

| **9235** | **USER_BEGIN_WRITE_RPA_2** | | | H04, H05 | **REF.:** A2 |
|---|---|---|---|---|---|
| - | Beginning of the second RPA area | | | WORT | 3/4 |
| Adv | Adv: 0 | 0 | 0 | IMMEDIATELY | SW5.1 |

| **9236** | **USER_END_WRITE_RPA_2** | | | H04, H05 | **REF.:** A2 |
|---|---|---|---|---|---|
| - | End of the second RPA area | | | WORT | 3/4 |
| Adv | Adv: 0 | 0 | 0 | IMMEDIATELY | SW5.1 |

| **9237** | **USER_CLASS_WRITE_RPA_3** | | | H04, H05 | **REF.:** A2 |
|---|---|---|---|---|---|
| - | Protection level for the third RPA area | | | BYTE | 3/4 |
| Adv | Adv: 7 | 0 | 7 | IMMEDIATELY | SW5.1 |

| **9238** | **USER_BEGIN_WRITE_RPA_3** | | | H04, H05 | **REF.:** A2 |
|---|---|---|---|---|---|
| - | Beginning of the third RPA area | | | WORT | 3/4 |
| Adv | Adv: 0 | 0 | 0 | IMMEDIATELY | SW5.1 |

| **9239** | **USER_END_WRITE_RPA_3** | | | H04, H05 | **REF.:** A2 |
|---|---|---|---|---|---|
| - | End of the third RPA area | | | WORT | 3/4 |
| Adv | Adv: 0 | 0 | 0 | IMMEDIATELY | SW5.1 |

| **9240** | **USER_CLASS_WRITE_TOA_NAME** | | | H04, H05 | **REF.:** A2 |
|---|---|---|---|---|---|
| - | Change tool designation and duplo | | | BYTE | 3/4 |
| Adv | Adv: 0 | 0 | 7 | IMMEDIATELY | 5 |

| **9241** | **USER_CLASS_WRITE_TOA_TYPE** | | | H04, H05 | **REF.:** A2 |
|---|---|---|---|---|---|
| - | Change tool type | | | BYTE | 3/4 |
| Adv | Adv: 0 | 0 | 7 | IMMEDIATELY | 5 |

| **9242** | **MA_STAT_DISPLAY_BASE** | | | H05 | **REF.:** K2 |
|---|---|---|---|---|---|
| - | Number basis display articul. pos. STAT | | | WORT | 3/4 |
| Adv, Emb | Adv: 10, Emb: 0 | 0 | 16 | IMMEDIATELY | 6.1 |

© Siemens AG 2004 All Rights Reserved

| **9243** | **MA_TU_DISPLAY_BASE** | | | H05 | **REF.:** K2 |
|---|---|---|---|---|---|
| - | Number basis display rot. axis pos. TU | | | WORT | 3/4 |
| Adv, Emb | Adv: 10, Emb: 0 | 0 | 16 | IMMEDIATELY | 6.1 |

| **9244** | **MA_ORIAXES_EULER_ANGLE_NAME** | | | H05 | **REF.:** K2 |
|---|---|---|---|---|---|
| - | Orientation axes as Euler angle | | | WORT | 3/4 |
| Adv | Adv: 0 | 0 | 1 | IMMEDIATELY | 6.1 |

| **9245** | **MA_PRESET_FRAMEIDX** | | | H05 | **REF.:** K2 |
|---|---|---|---|---|---|
| - | Scratching value storage + preset.act.val. | | | WORT | 3/4 |
| Adv | Adv: 1 | 1 | 10 | IMMEDIATELY | 6.1 |

| **9246** | **USER_CLASS_SYS_ZERO_OFF** | | | H04, H05 | **REF.:** A2 |
|---|---|---|---|---|---|
| - | Access level write system frames | | | BYTE | 2/2 |
| Adv, Emb | Adv: 7, Emb: 7 | 0 | 7 | IMMEDIATELY | Adv.: 6.03, Emb.: 6.02 |

| **9247** | **USER_CLASS_BASE_ZERO_OFF_PA** | | | H04, H05 | **REF.:** K2 |
|---|---|---|---|---|---|
| - | Access level basic offset PA | | | BYTE | 2/2 |
| Adv, Emb | Adv: 7, Emb: 7 | 0 | 7 | IMMEDIATELY | 5.3 |

| **9248** | **USER_CLASS_BASE_ZERO_OFF_MA** | | | H04, H05 | **REF.:** IAM, IM1 |
|---|---|---|---|---|---|
| - | Access level basic offset MA | | | BYTE | 2/2 |
| Adv, Emb | Adv: 7, Emb: 7 | 0 | 7 | IMMEDIATELY | 5.3 |

| **9249** | **USER_CLASS_VERT_MODE_SK** | | | H04, H05 | **REF.:** K2 |
|---|---|---|---|---|---|
| - | Protect. level vertical SKs of area SKs<br>Protection for vertical SK | | | DOUBLE | 3/4 |
| Emb | Emb: 2004318071 | 0 | 0x77777777 | IMMEDIATELY | SW6.1 |

| **9251** | **USER_CLASS_TM_SKTLLIST** | | | H04, H05 | **REF.:** FBW |
|---|---|---|---|---|---|
| - | Display of tool list | | | BYTE | 3/4 |
| Emb | Emb: 7 | 0 | 7 | Power On | SW4.1 |

| **9252** | **USER_CLASS_TM_SKTOOLLOAD** | | | H04, H05 | **REF.:** FBW |
|---|---|---|---|---|---|
| - | Protection level for loading tools | | | BYTE | 3/4 |
| Emb | Emb: 7 | 0 | 7 | Power On | SW4.1 |

| **9253** | **USER_CLASS_TM_SKTOOLUNLOAD** | | | H04, H05 | **REF.:** FBW |
|---|---|---|---|---|---|
| - | Prot. level for unloading tools | | | BYTE | 3/4 |
| Emb | Emb: 7 | 0 | 7 | Power On | SW4.1 |

| **9254** | **USER_CLASS_TM_SKTOOLMOVE** | | | H04, H05 | **REF.:** FBW |
|---|---|---|---|---|---|
| - | Protection level for tool relocation | | | BYTE | 3/4 |
| Emb | Emb: 7 | 0 | 7 | Power On | SW4.1 |

| **9256** | **USER_CLASS_TM_SKMGLREPR2** | | | H04, H05 | **REF.:** FBW |
|---|---|---|---|---|---|
| - | Prot. level for display of 2nd mag. list | | | BYTE | 3/4 |
| Emb | Emb: 7 | 0 | 7 | Power On | SW4.1 |

© Siemens AG 2004 All Rights Reserved

| **9257** | **USER_CLASS_TM_SKMGLREPR3** | | | H04, H05 | **REF.:** FBW |
|---|---|---|---|---|---|
| - | Prot. level for display of 3rd mag. list | | | BYTE | 3/4 |
| Emb | Emb: 7 | 0 | 7 | Power On | SW4.1 |

| **9258** | **USER_CLASS_TM_SKNCNEWTOOLE** | | | H04, H05 | **REF.:** FBW |
|---|---|---|---|---|---|
| - | Prot.level for creating new cuttinng edges | | | BYTE | 3/4 |
| Emb | Emb: 7 | 0 | 7 | Power On | SW4.1 |

| **9259** | **USER_CLASS_TM_SKNCDELTOOL** | | | H04, H05 | **REF.:** FBW |
|---|---|---|---|---|---|
| - | Protection level for deleting tools | | | BYTE | 3/4 |
| Emb | Emb: 7 | 0 | 7 | Power On | SW4.1 |

| **9260** | **USER_CLASS_TM_SKMGBUFFER** | | | H04, H05 | **REF.:** FBW |
|---|---|---|---|---|---|
| - | Prot. level for buffer on/off | | | BYTE | 3/4 |
| Emb | Emb: 7 | 0 | 7 | Power On | SW4.1 |

| **9261** | **USER_CLASS_TM_SKMGFIND** | | | H04, H05 | **REF.:** FBW |
|---|---|---|---|---|---|
| - | Protection level for search | | | BYTE | 3/4 |
| Emb | Emb: 7 | 0 | 7 | Power On | SW4.1 |

| **9262** | **USER_CLASS_TM_SKMGLISTPOS** | | | H04, H05 | **REF.:** FBW |
|---|---|---|---|---|---|
| - | Protection level for positioning | | | BYTE | 3/4 |
| Emb | Emb: 7 | 0 | 7 | Power On | SW4.1 |

| **9263** | **USER_CLASS_TM_SKMGNEXT** | | | H04, H05 | **REF.:** FBW |
|---|---|---|---|---|---|
| - | Prot. level f. paging to next magazine | | | BYTE | 3/4 |
| Emb | Emb: 7 | 0 | 7 | Power On | SW4.1 |

| **9264** | **USER_CLASS_TM_SKTLNEWTOOL** | | | H04, H05 | **REF.:** FBW |
|---|---|---|---|---|---|
| - | Protection level for creating tools | | | BYTE | 3/4 |
| Emb | Emb: 7 | 0 | 7 | Power On | SW4.1 |

| **9265** | **USER_CLASS_TM_SKTLLREPR1** | | | H04, H05 | **REF.:** FBW |
|---|---|---|---|---|---|
| - | Prot. level for display of 1st mag. list | | | BYTE | 3/4 |
| Emb | Emb: 7 | 0 | 7 | Power On | SW4.1 |

| **9266** | **USER_CLASS_TM_SKTLLREPR2** | | | H04, H05 | **REF.:** FBW |
|---|---|---|---|---|---|
| - | Prot. level for display of 2nd tool list | | | BYTE | 3/4 |
| Emb | Emb: 7 | 0 | 7 | Power On | SW4.1 |

| **9267** | **USER_CLASS_TM_SKTLLREPR3** | | | H04, H05 | **REF.:** FBW |
|---|---|---|---|---|---|
| - | Prot. level for display of 3rd tool list | | | BYTE | 3/4 |
| Emb | Emb: 7 | 0 | 7 | Power On | SW4.1 |

| **9269** | **USER_CLASS_TM_SKFINDPLACE** | | | H04, H05 | **REF.:** FBW |
|---|---|---|---|---|---|
| - | Empty softkey loc., display tool list | | | BYTE | 3/4 |
| Emb | Emb: 7 | 0 | 7 | Power On | SW4.1 |

| **9270** | **USER_CLASS_TM_SKACTPLACE** | | | H04, H05 | **REF.:** FBW |
|---|---|---|---|---|---|
| - | Prot. level f. load. to current location | | | BYTE | 3/4 |
| Emb | Emb: 7 | 0 | 7 | Power On | SW4.1 |

© Siemens AG 2004 All Rights Reserved

| **9271** | **USER_CLASS_TM_SKLDTOOLDAT** | | | H04, H05 | **REF.:** FBW |
|---|---|---|---|---|---|
| - | Check and edit the tool data | | | BYTE | 3/4 |
| Emb | Emb: 7 | 0 | 7 | Power On | SW4.1 |

| **9272** | **USER_CLASS_APPLICATION** | | | H04, H05 | **REF.:** A2 |
|---|---|---|---|---|---|
| - | Protec. level for operating area selection | | | BYTE | 3/4 |
| Emb | Emb: 0 | 0 | 7 | IMMEDIATELY | 6.4 |

| **9300** | **V24_USER_XON** | | | H05 | **REF.:** K4 |
|---|---|---|---|---|---|
| - | User: X on character | | | REAL | 3/4 |
| OP30, Emb | OP30: 17, Emb: 17 | 0 | 0xFF | IMMEDIATELY | - |

| **9301** | **V24_USER_XOFF** | | | H05 | **REF.:** K4 |
|---|---|---|---|---|---|
| - | User: X off character | | | REAL | 3/4 |
| OP30, Emb | OP30: 19, Emb: 19 | 0 | 0xFF | IMMEDIATELY | - |

| **9302** | **V24_USER_EOF** | | | H05 | **REF.:** K4 |
|---|---|---|---|---|---|
| - | User: end-of-transmission character | | | REAL | 3/4 |
| OP30, Emb | OP30: 26, Emb: 26 | 0 | 0xFF | IMMEDIATELY | - |

| **9303** | **V24_USER_CONTROLS** | | | H05 | **REF.:** K4 |
|---|---|---|---|---|---|
| - | User: special bits | | | REAL | 3/4 |
| OP30, Emb | OP30: 76, Emb: 76 | 0 | 0x3FF | IMMEDIATELY | - |

| **9303** | **V24_USER_CONTROLS** | | | H05 | **REF.:** K4 |
|---|---|---|---|---|---|
| - | User: special bits | | | REAL | 3/4 |
| OP30, Emb | OP30: 76, Emb: 76 | 0 | 0x3FF | IMMEDIATELY | - |

| **9304** | **V24_USER_RTS** | | | H05 | **REF.:** K4 |
|---|---|---|---|---|---|
| - | User: line-controlled<br>9305 User: baud rate | | | BYTE | 3/4 |
| OP30, Emb | OP30: 1, Emb: 0 | 0 | 1 | IMMEDIATELY | - |

| **9305** | **V24_USER_BAUD** | | | H05 | **REF.:** K4 |
|---|---|---|---|---|---|
| - | User: baud rate<br>(300, 600, 1200, 2400, 4800, 9600, 19200)<br>0 1 ... | | | BYTE | 3/4 |
| OP30, Emb | OP30: 4, Emb: 5 | 0 | 8 | IMMEDIATELY | - |

| **9306** | **V24_USER_DATABITS** | | | H05 | **REF.:** K4 |
|---|---|---|---|---|---|
| - | User: data bits | | | BYTE | 3/4 |
| OP30, Emb | OP30: 1, Emb: 1 | 0 | 1 | IMMEDIATELY | - |

| **9307** | **V24_USER_PARITY** | | | H05 | **REF.:** K4 |
|---|---|---|---|---|---|
| - | User: parity bits | | | BYTE | 3/4 |
| OP30, Emb | OP30: 0, Emb: 0 | 0 | 2 | IMMEDIATELY | - |

| **9308** | **V24_USER_STOPBIT** | | | H05 | **REF.:** K4 |
|---|---|---|---|---|---|
| - | User: stop bits | | | BYTE | 3/4 |
| OP30, Emb | OP30: 0, Emb: 0 | 0 | 1 | IMMEDIATELY | - |

© Siemens AG 2004 All Rights Reserved

| **9309** | **V24_USER_LINE** | | | H05 | **REF.:** K4 |
|---|---|---|---|---|---|
| - | User: RS-232 interface (COM1/COM2) (COM1/COM2) | | | BYTE | 3/4 |
| Emb | Emb: 1 | 1 | 2 | IMMEDIATELY | SW5 |

| **9310** | **V24_PRINTER_XON** | | | H05 | **REF.:** K4 |
|---|---|---|---|---|---|
| - | Printer: X on character | | | REAL | 3/4 |
| OP30, Emb | OP30: 17, Emb: 17 | 0 | 0xFF | IMMEDIATELY | - |

| **9311** | **V24_PRINTER_XOFF** | | | H05 | **REF.:** K4 |
|---|---|---|---|---|---|
| - | Printer: X off character | | | REAL | 3/4 |
| OP30, Emb | OP30: 19, Emb: 19 | 0 | 0xFF | IMMEDIATELY | - |

| **9312** | **V24_PRINTER_EOF** | | | H05 | **REF.:** K4 |
|---|---|---|---|---|---|
| - | Printer: end-of-transmission character | | | REAL | 3/4 |
| OP30, Emb | OP30: 12, Emb: 12 | 0 | 0xFF | IMMEDIATELY | - |

| **9313** | **V24_PRINTER_CONTROLS** | | | H05 | **REF.:** K4 |
|---|---|---|---|---|---|
| - | Printer: special bits | | | REAL | 3/4 |
| OP30, Emb | OP30: 76, Emb: 76 | 0 | 0x3FF | IMMEDIATELY | - |

| **9313** | **V24_PRINTER_CONTROLS** | | | H05 | **REF.:** K4 |
|---|---|---|---|---|---|
| - | Printer: special bits | | | REAL | 3/4 |
| OP30, Emb | OP30: 76, Emb: 76 | 0 | 0x3FF | IMMEDIATELY | - |

| **9314** | **V24_PRINTER_RTS** | | | H05 | **REF.:** K4 |
|---|---|---|---|---|---|
| - | Printer: line-controlled | | | BYTE | 3/4 |
| OP30, Emb | OP30: 0, Emb: 0 | 0 | 1 | IMMEDIATELY | - |

| **9315** | **V24_PRINTER_BAUD** | | | H05 | **REF.:** K4 |
|---|---|---|---|---|---|
| - | Printer: baud rate<br>9316 Printer: data bits<br>(300, 600, 1200, 2400, 4800, 9600, 19200)<br>0 1 ... | | | BYTE | 3/4 |
| OP30, Emb | OP30: 5, Emb: 5 | 0 | 8 | IMMEDIATELY | - |

| **9316** | **V24_PRINTER_DATABITS** | | | H05 | **REF.:** K4 |
|---|---|---|---|---|---|
| - | Printer data bits | | | BYTE | 3/4 |
| OP30, Emb | OP30: 1, Emb: 1 | 0 | 1 | IMMEDIATELY | - |

| **9317** | **V24_PRINTER_PARITY** | | | H05 | **REF.:** K4 |
|---|---|---|---|---|---|
| - | Printer: parity bits | | | BYTE | 3/4 |
| OP30, Emb | OP30: 0, Emb: 0 | 0 | 2 | IMMEDIATELY | - |

| **9318** | **V24_PRINTER_STOPBIT** | | | H05 | **REF.:** K4 |
|---|---|---|---|---|---|
| - | Printer: stop bits | | | BYTE | 3/4 |
| OP30, Emb | OP30: 0, Emb: 0 | 0 | 1 | IMMEDIATELY | - |

| **9319** | **V24_PRINTER_LINE** | | | H05 | **REF.:** K4 |
|---|---|---|---|---|---|
| - | Printer: RS-232 interface (COM1/COM2) (COM1/COM2) | | | BYTE | 3/4 |
| Emb | Emb: 1 | 1 | 2 | IMMEDIATELY | - |

© Siemens AG 2004 All Rights Reserved

| **9320** | **V24_PG_PC_XON** | | | H05 | **REF.:** K4 |
|---|---|---|---|---|---|
| - | PG: X on character | | | REAL | 3/4 |
| OP30, Emb | OP30: 17, Emb: 17 | 0 | 0xFF | IMMEDIATELY | - |

| **9321** | **V24_PG_PC_XOFF** | | | H05 | **REF.:** K4 |
|---|---|---|---|---|---|
| - | PG: X off character | | | REAL | 3/4 |
| OP30, Emb | OP30: 19, Emb: 19 | 0 | 0xFF | IMMEDIATELY | - |

| **9322** | **V24_PG_PC_EOF** | | | H05 | **REF.:** K4 |
|---|---|---|---|---|---|
| - | PG: end-of-transmission character | | | REAL | 3/4 |
| OP30, Emb | OP30: 26, Emb: 26 | 0 | 0xFF | IMMEDIATELY | - |

| **9323** | **V24_PG_PC_CONTROLS** | | | H05 | **REF.:** K4 |
|---|---|---|---|---|---|
| - | PG: special bits | | | REAL | 3/4 |
| OP30, Emb | OP30: 144, Emb: 144 | 0 | 0x3FF | IMMEDIATELY | - |

| **9323** | **V24_PG_PC_CONTROLS** | | | H05 | **REF.:** K4 |
|---|---|---|---|---|---|
| - | PG: special bits | | | REAL | 3/4 |
| OP30, Emb | OP30: 144, Emb: 144 | 0 | 0x3FF | IMMEDIATELY | - |

| **9324** | **V24_PG_PC_RTS** | | | H05 | **REF.:** K4 |
|---|---|---|---|---|---|
| - | PG: line-controlled | | | BYTE | 3/4 |
| OP30, Emb | OP30: 0, Emb: 0 | 0 | 1 | IMMEDIATELY | - |

| **9325** | **V24_PG_PC_BAUD** | | | H05 | **REF.:** K4 |
|---|---|---|---|---|---|
| - | PG: baud rate<br>(300, 600, 1200, 2400, 4800, 9600)<br>0 1 ... | | | BYTE | 3/4 |
| OP30, Emb | OP30: 5, Emb: 5 | 0 | 8 | IMMEDIATELY | - |

| **9326** | **V24_PG_PC_DATABITS** | | | H05 | **REF.:** K4 |
|---|---|---|---|---|---|
| - | PG: data bits | | | BYTE | 3/4 |
| OP30, Emb | OP30: 1, Emb: 1 | 0 | 1 | IMMEDIATELY | - |

| **9327** | **V24_PG_PC_PARITY** | | | H05 | **REF.:** K4 |
|---|---|---|---|---|---|
| - | PG: parity bits | | | BYTE | 3/4 |
| OP30, Emb | OP30: 0, Emb: 0 | 0 | 2 | IMMEDIATELY | - |

| **9328** | **V24_PG_PC_STOPBIT** | | | H05 | **REF.:** K4 |
|---|---|---|---|---|---|
| - | PG: stop bits | | | BYTE | 3/4 |
| OP30, Emb | OP30: 0, Emb: 0 | 0 | 1 | IMMEDIATELY | - |

| **9329** | **V24_PG_PC_LINE** | | | H05 | **REF.:** K4 |
|---|---|---|---|---|---|
| - | PG: RS-232 interface (COM1/COM2)<br>(COM1/COM2) | | | BYTE | 3/4 |
| Emb | Emb: 1 | 1 | 2 | IMMEDIATELY | - |

| **9400** | **TOOL_REF_GEO_AXIS1** | | | H05 | **REF.:** BA |
|---|---|---|---|---|---|
| - | Abs.dim.f.tool length offset f.geoaxis 1 | | | DOUBLE | 3/4 |
| OP30, Emb | OP30: 0, Emb: 0 | *** | *** | IMMEDIATELY | - |

© Siemens AG 2004 All Rights Reserved

| **9401** | **TOOL_REF_GEO_AXIS2** | | | H05 | **REF.:** BA |
|---|---|---|---|---|---|
| - | Abs.dim.f.tool length offset f.geoaxis 2 | | | DOUBLE | 3/4 |
| OP30, Emb | OP30: 0, Emb: 0 | *** | *** | IMMEDIATELY | - |

| **9402** | **TOOL_REF_GEO_AXIS3** | | | H05 | **REF.:** BA |
|---|---|---|---|---|---|
| - | Abs.dim.f.tool length offset f.geoaxis 3 | | | DOUBLE | 3/4 |
| OP30, Emb | OP30: 0, Emb: 0 | *** | *** | IMMEDIATELY | - |

| **9410** | **TM_LOAD_PLACE** | | | H05 | **REF.:** BA |
|---|---|---|---|---|---|
| - | Number of load location | | | INTEGER | 3/4 |
| OP30, Emb | OP30: 0, Emb: 0 | *** | *** | Power On | - |

| **9411** | **TM_NUM_MAG** | | | H05 | **REF.:** BA |
|---|---|---|---|---|---|
| - | Number of work magazine | | | INTEGER | 3/4 |
| OP30, Emb | OP30: 0, Emb: 0 | *** | *** | Power On | - |

| **9412** | **TM_DEFAULT_TOOLSIZE** | | | H05 | **REF.:** FBW |
|---|---|---|---|---|---|
| - | Preset value for tool size | | | REAL | 3/4 |
| Emb | Emb: 1111 | 1111 | 7777 | IMMEDIATELY | SW4.1 |

| **9414** | **TM_KIND_OF_TOOLMANAGEMENT** | | | H01, H02, H05 | **REF.:** FBW |
|---|---|---|---|---|---|
| - | Type of tool management representation<br>0: old, 1: new ( SW 5.2 and higher) | | | BYTE | 3/4 |
| SM, ST, Emb | SM: 1, ST: 1,<br>Emb: 0 | 0 | 1 | Power On | SW5 |

| **9415** | **TM_DEFAULT_TOOLPLACESPEC** | | | H05 | **REF.:** FBW |
|---|---|---|---|---|---|
| - | Default value for location type | | | BYTE | 3/4 |
| Emb | Emb: 1 | 1 | 99 | IMMEDIATELY | SW4.2 |

| **9416** | **TM_DEFAULT_TOOLTYPE** | | | H05 | **REF.:** FBW |
|---|---|---|---|---|---|
| - | Preset value for type of location | | | REAL | 3/4 |
| Emb | Emb: 120 | 100 | 900 | IMMEDIATELY | SW4.1 |

| **9417** | **TM_DEFAULT_TOOLSTATE** | | | H05 | **REF.:** FBW |
|---|---|---|---|---|---|
| - | Preset value for tool status loading | | | INTEGER | 3/4 |
| Emb | Emb: 2 | 0 | 255 | IMMEDIATELY | SW4.1 |

| **9419** | **TM_DEFAULT_DELETE_TOOL** | | | H05 | **REF.:** FBW |
|---|---|---|---|---|---|
| - | Preset tool data for automatic deletion | | | BYTE | 3/4 |
| Emb | Emb: 0 | 0 | 1 | IMMEDIATELY | SW4.1 |

| **9420** | **MA_ONLY_MKS_DIST_TO_GO** | | | H05 | **REF.:** FBW |
|---|---|---|---|---|---|
| - | Distance-to-go display in work window<br>0: WCS value<br>1: MCS value | | | BYTE | 3/4 |
| Emb | Emb: 0 | 0 | 1 | IMMEDIATELY | SW4.1 |

| **9421** | **MA_AXES_SHOW_GEO_FIRST** | | | H05 | **REF.:** K1 |
|---|---|---|---|---|---|
| - | Actual value display with leading axes | | | BYTE | 3/4 |
| Adv, Emb | Adv: 1, Emb: 1 | 0 | 1 | IMMEDIATELY | SW2 |

© Siemens AG 2004 All Rights Reserved

| **9422** | **MA_PRESET_MODE** | | | H05 | **REF.:** K1 |
|---|---|---|---|---|---|
| - | Select PRESET/Basic offset in JOG<br>0 no preset, no actual-value setting<br>1 PRESET<br>2 Actual-value setting<br>3 Actual-value setting s. Online Help | | | BYTE | 3/4 |
| Adv, Emb | Adv: 1, Emb: 1 | 0 | 3 | IMMEDIATELY | SW5 |

| **9423** | **MA_MAX_SKP_LEVEL** | | | H05 | **REF.:** K1 |
|---|---|---|---|---|---|
| - | Max. skip levels in NC program | | | BYTE | 3/4 |
| Adv, Emb | Adv: 1, Emb: 1 | 1 | 8 | Power On | SW5 |

| **9424** | **MA_COORDINATE_SYSTEM** | | | H05 | **REF.:** K2 |
|---|---|---|---|---|---|
| - | Coord.syst. for act.val. display<br>0: WCS<br>1: SZS (settable zero system) | | | BYTE | 3/4 |
| Adv, Emb | Adv: 0, Emb: 0 | 0 | 1 | IMMEDIATELY | SW5 |

| **9424** | **MA_COORDINATE_SYSTEM** | | | H05 | **REF.:** K2 |
|---|---|---|---|---|---|
| - | Coord.syst. for act.val. display<br>0: WCS<br>1: SZS (settable zero system) | | | BYTE | 3/4 |
| Adv, Emb | Adv: 0, Emb: 0 | 0 | 1 | Power On | SW5 |

| **9425** | **MA_SCRATCH_DEFAULT_MODE** | | | H05 | **REF.:** K2 |
|---|---|---|---|---|---|
| - | Tool offset calculation Scratching | | | DOUBLE | 3/4 |
| Emb | Emb: 0 | 0 | 2236962 | IMMEDIATELY | 5.3 |

| **9426** | **MA_AX_DRIVELOAD_FROM_PLC1** | | | H01, H02, H05 | **REF.:** |
|---|---|---|---|---|---|
| - | Mach.axis ind. analog spindle power displ. | | | BYTE | 3/4 |
| SM, ST, Adv, Emb | SM: , ST: , Adv: 0, Emb: 0 | 0 | 31 | Power On | Emb: 6.5 Adv: 6.4 |

| **9427** | **MA_AX_DRIVELOAD_FROM_PLC2** | | | H01, H02, H05 | **REF.:** |
|---|---|---|---|---|---|
| - | Mach.axis ind. analog spindle power displ. | | | BYTE | 3/4 |
| SM, ST, Adv, Emb | SM: , ST: , Adv: 0, Emb: 0 | 0 | 31 | Power On | Emb: 6.5 Adv: 6.4 |

| **9428** | **MA_SPIND_MAX_POWER** | | | H01, H02, H05 | **REF.:** IM4 |
|---|---|---|---|---|---|
| % | Maximum value of the spindle performance display | | | REAL | 3/4 |
| SM, ST, Adv, Emb | SM: , ST: , Adv: 100, Emb: 100 | 100 | 0xFFFF | Power On | Emb: 6.5 Adv: 6.4 |

| **9429** | **MA_SPIND_POWER_RANGE** | | | H01, H02, H05 | **REF.:** IM4 |
|---|---|---|---|---|---|
| % | Display range of the spindle performance display | | | REAL | 3/4 |
| SM, ST, Adv, Emb | SM: 200, ST: , Adv: 100, Emb: 100 | 100 | 0xFFFF | Power On | Emb: 6.5 Adv: 6.4 |

| **9430** | **TM_UNLOAD_AND_DELETE** | | | | **REF.:** FBO |
|---|---|---|---|---|---|
| - | | | | BOOL | 3/4 |
| OP30, | OP30: 0, | *** | *** | Power On | SW5 |

© Siemens AG 2004 All Rights Reserved

| **9431** | **TM_LOAD_TOOL_NEW** | | | | **REF.:** FBO |
|---|---|---|---|---|---|
| - | | | | BOOL | 3/4 |
| OP30, | OP30: 1, | *** | *** | Power On | SW5 |

| **9432** | **TM_TOOL_STATE_DEF_VAL** | | | | **REF.:** FBO |
|---|---|---|---|---|---|
| - | | | | BYTE | 3/4 |
| OP30, | OP30: 2, | *** | *** | Power On | |

| **9433** | **TM_ACT_SEARCH_AND_POS** | | | | **REF.:** FBO |
|---|---|---|---|---|---|
| - | | | | BOOL | 3/4 |
| OP30, | OP30: 0, | *** | *** | Power On | |

| **9434** | **TM_LOAD_LOC1** | | | | **REF.:** FBW |
|---|---|---|---|---|---|
| - | 0: automatic selection in a magazine | | | INTEGER | 3/7 |
| OP30, | OP30: 0, | *** | *** | Power On | 4.2 |

| **9435** | **TM_LOAD_LOC2** | | | | **REF.:** FBW |
|---|---|---|---|---|---|
| - | 0: automatic selection in a magazine | | | INTEGER | 3/7 |
| OP30, | OP30: 0, | *** | *** | Power On | 4.2 |

| **9436** | **TM_LOAD_LOC3** | | | | **REF.:** FBW |
|---|---|---|---|---|---|
| - | 0: automatic selection in a magazine | | | INTEGER | 3/7 |
| OP30, | OP30: 0, | *** | *** | Power On | 4.2 |

| **9437** | **TM_LOAD_LOC4** | | | | **REF.:** FBW |
|---|---|---|---|---|---|
| - | 0: automatic selection in a magazine | | | INTEGER | 3/7 |
| OP30, | OP30: 0, | *** | *** | Power On | 4.2 |

| **9438** | **TM_LOAD_LOC5** | | | | **REF.:** FBW |
|---|---|---|---|---|---|
| - | 0: automatic selection in a magazine | | | INTEGER | 3/7 |
| OP30, | OP30: 0, | *** | *** | Power On | 4.2 |

| **9440** | **ACTIVATE_SEL_USER_DATA** | | | H05 | **REF.:** K2 |
|---|---|---|---|---|---|
| - | Activate active offset immediately | | | BYTE | 3/4 |
| Adv, Emb | Adv: 1, Emb: 0 | 0 | 1 | IMMEDIATELY | SW4.3 |

| **9449** | **WRITE_TOA_LIMIT_MASK** | | | H05 | **REF.:** K2 |
|---|---|---|---|---|---|
| - | MD9449 appl. to wear (bit0) SC(1) EC(2)<br>MD9449 appl. to wear (bit0), SC (1) , EC (2) | | | BYTE | 3/4 |
| Adv | Adv: 7 | 0 | 7 | IMMEDIATELY | 5.2 |

| **9450** | **WRITE_TOA_FINE_LIMIT** | | | H05 | **REF.:** K2 |
|---|---|---|---|---|---|
| mm | Limit value for wear fine | | | DOUBLE | 3/4 |
| Adv, Emb | Adv: 0, Emb: 0.999 | *** | *** | IMMEDIATELY | SW4.2 |

| **9451** | **WRITE_ZOA_FINE_LIMIT** | | | H05 | **REF.:** K2 |
|---|---|---|---|---|---|
| mm | Limit value for offset fine | | | DOUBLE | 3/4 |
| Adv, Emb | Adv: 0, Emb: 0.999 | *** | *** | IMMEDIATELY | SW4.2 |

© Siemens AG 2004 All Rights Reserved

| **9459** | **PA_ZOA_MODE** | | | H05 | **REF.:** K2, IM2 |
|---|---|---|---|---|---|
| - | Display mode zero offset | | | BYTE | 3/4 |
| Emb | Emb: 1 | 0 | 1 | IMMEDIATELY | SW 6.1 |

| **9460** | **PROGRAM_SETTINGS** | | | H05 | **REF.:** A2 |
|---|---|---|---|---|---|
| - | Settings in Program area | | | INTEGER | 3/4 |
| Adv, Emb | Adv: 0, Emb: 0 | *** | *** | IMMEDIATELY | SW5.1 |

| **9461** | **CONTOUR_END_TEXT** | | | H05 | **REF.:** A2 |
|---|---|---|---|---|---|
| - | String to be added to end of contour | | | STRING | 3/4 |
| Emb | Emb: " | *** | *** | IMMEDIATELY | SW5.1 |

| **9464** | **MAX_PROGRAMM_SIZE_CHECK** | | | H05 | **REF.:** |
|---|---|---|---|---|---|
| - | File size from which no test is performed | | | INTEGER | 3/4 |
| Emb | Emb: 60200 | 60200 | 0x7FFFFFFF | IMMEDIATELY | 6.4 |

| **9477** | **TO_TRACE** | | | H01, H02, H05 | **REF.:** |
|---|---|---|---|---|---|
| - | For internal test purposes | | | REAL | 3/4 |
| SM, ST, Emb | SM: 0, ST: 0, Emb: 0 | 0 | 0xFFFF | Power On | |

| **9477** | **TO_TRACE** | | | H01, H02, H05 | **REF.:** |
|---|---|---|---|---|---|
| - | For internal test purposes | | | REAL | 3/4 |
| SM, ST, Emb | SM: 0, ST: 0, Emb: 0 | 0 | 0xFFFF | Power On | |

| **9478** | **TO_OPTION_MASK** | | | H01, H02, H05 | **REF.:** |
|---|---|---|---|---|---|
| - | For internal purposes | | | INTEGER | 2/2 |
| SM, ST, Emb | SM: 1, ST: 1, Emb: 0 | *** | *** | Power On | |

| **9479** | **TO_MAG_PLACE_DISTANCE** | | | H02, H05 | **REF.:** FBSP |
|---|---|---|---|---|---|
| mm | Distance betw. indiv. magazine locations | | | DOUBLE | 3/4 |
| ST, Emb | ST: Emb: 0 | 0 | 10000 | Power On | 6.3 |

| **9480** | **MA_SIMULATION_MODE** | | | H05 | **REF.:** BAD |
|---|---|---|---|---|---|
| - | Simulation type | | | BYTE | 3/4 |
| Adv | Adv: -1 | -1 | 2 | IMMEDIATELY | 6.4 |

| **9481** | **MA_STAND_SIMULATION_LIMIT** | | | H05 | **REF.:** BAD |
|---|---|---|---|---|---|
| - | Standard simulation limit in KB | | | INTEGER | 3/4 |
| Adv | Adv: 200 | 200 | 2000000 | IMMEDIATELY | 6.4 |

| **9500** | **NC_PROPERTIES** | | | H05 | **REF.:** A2 |
|---|---|---|---|---|---|
| - | NC properties<br>Bit 0: digital drives<br>Bit 1: software start-up switch<br>Bit 2...4: reserved | | | BYTE | 3/4 |
| OP30, Emb | OP30: 255, Emb: 255 | 0 | 0xFF | IMMEDIATELY | SW2 |

| **9500** | **NC_PROPERTIES** | | | H05 | **REF.:** A2 |
|---|---|---|---|---|---|
| - | NC properties<br>Bit 0: digital drives<br>Bit 1: software start-up switch<br>Bit 2...4: reserved | | | BYTE | 3/4 |
| OP30, Emb | OP30: 255, Emb: 255 | 0 | 0xFF | IMMEDIATELY | SW2 |

© Siemens AG 2004 All Rights Reserved

| **9509** | **USER_CLASS_DIRECTORY_CHG** | | | H04, H05 | **REF.:** FBT, FBSP, EMB |
|---|---|---|---|---|---|
| - | Protect. level for network configuration | | | BYTE | 3/4 |
| Emb | Emb: 1 | 0 | 7 | IMMEDIATELY | 6.2 |

| **9510** | **USER_CLASS_DIRECTORY1_P** | | | H04, H05 | **REF.:** A2 |
|---|---|---|---|---|---|
| - | Protection level for network drive1 progr. | | | BYTE | 3/4 |
| Adv, Emb | Adv: 7, Emb: 1 | 0 | 7 | IMMEDIATELY | 6.1 |

| **9511** | **USER_CLASS_DIRECTORY2_P** | | | H04, H05 | **REF.:** A2 |
|---|---|---|---|---|---|
| - | Protection level for network drive2 progr. | | | BYTE | 3/4 |
| Adv, Emb | Adv: 7, Emb: 1 | 0 | 7 | IMMEDIATELY | 6.1 |

| **9512** | **USER_CLASS_DIRECTORY3_P** | | | H04, H05 | **REF.:** A2 |
|---|---|---|---|---|---|
| - | Protection level for network drive3 progr. | | | BYTE | 3/4 |
| Adv, Emb | Adv: 7, Emb: 1 | 0 | 7 | IMMEDIATELY | 6.1 |

| **9513** | **USER_CLASS_DIRECTORY4_P** | | | H04, H05 | **REF.:** A2 |
|---|---|---|---|---|---|
| - | Protection level for network drive4 progr. | | | BYTE | 3/4 |
| Adv, Emb | Adv: 7, Emb: 1 | 0 | 7 | IMMEDIATELY | 6.1 |

| **9516** | **USER_CLASS_DIRECTORY1_M** | | | H04, H05 | **REF.:** A2 |
|---|---|---|---|---|---|
| - | Protection level for network drive1 mach. | | | BYTE | 3/4 |
| Adv, Emb | Adv: 7, Emb: 0 | 0 | 7 | IMMEDIATELY | 6.1 |

| **9517** | **USER_CLASS_DIRECTORY2_M** | | | H04, H05 | **REF.:** A2 |
|---|---|---|---|---|---|
| - | Protection level for network drive2 mach. | | | BYTE | 3/4 |
| Adv, Emb | Adv: 7, Emb: 0 | 0 | 7 | IMMEDIATELY | 6.1 |

| **9518** | **USER_CLASS_DIRECTORY3_M** | | | H04, H05 | **REF.:** A2 |
|---|---|---|---|---|---|
| - | Protection level for network drive3 mach. | | | BYTE | 3/4 |
| Adv, Emb | Adv: 7, Emb: 0 | 0 | 7 | IMMEDIATELY | 6.1 |

| **9519** | **USER_CLASS_DIRECTORY4_M** | | | H04, H05 | **REF.:** A2 |
|---|---|---|---|---|---|
| - | Protection level for network drive4 mach. | | | BYTE | 3/4 |
| Adv, Emb | Adv: 7, Emb: 0 | 0 | 7 | IMMEDIATELY | 6.1 |

| **9550** | **CTM_CYC_ROUGH_RELEASE_DIST** | | | H02, H03 | **REF.:** FBMA |
|---|---|---|---|---|---|
| mm | Return distance for contour roughing | | | DOUBLE | 3/4 |
| ST, MT | ST: 1, MT: 1 | 0.001 | 10.0 | IMMEDIATELY | 5.2 (840D), 3.2 (810D) |

| **9551** | **CTM_CYC_ROUGH_RELEASE_ANGLE** | | | H02, H03 | **REF.:** FBMA |
|---|---|---|---|---|---|
| degrees | Return angle for contour roughing | | | DOUBLE | 3/4 |
| ST, MT | ST: 45, MT: 45 | 0.0 | 90.0 | IMMEDIATELY | 5.2 (840D), 3.2 (810D) |

| **9552** | **CTM_CYC_ROUGH_BLANC_OFFS** | | | H02, H03 | **REF.:** FBMA |
|---|---|---|---|---|---|
| mm | Blank allowance for contour roughing | | | DOUBLE | 3/4 |
| ST, MT | ST: 1, MT: 1 | 0.0 | 100.0 | IMMEDIATELY | 5.2 (840D), 3.2 (810D) |

© Siemens AG 2004 All Rights Reserved

| **9553** | **CTM_CYC_ROUGH_TRACE_ANGLE** | | | H02, H03 | **REF.:** FBMA |
|---|---|---|---|---|---|
| degrees | Rounding angle for contour cutting | | | DOUBLE | 3/4 |
| ST, MT | ST: 5, MT: 5 | 0.0 | 90.0 | IMMEDIATELY | 5.2 (840D), 3.2 (810D) |

| **9554** | **CTM_CYC_ROUGH_MIN_REST_MAT1** | | | H02, H03 | **REF.:** FBMA |
|---|---|---|---|---|---|
| % | Diff. dimension resid. mat. machin. axis 1 | | | DOUBLE | 3/4 |
| ST, MT | ST: 50, MT: 50 | 0.0 | 1000.0 | IMMEDIATELY | 5.2 (840D), 3.2 (810D) |

| **9555** | **CTM_CYC_ROUGH_MIN_REST_MAT2** | | | H02, H03 | **REF.:** FBMA |
|---|---|---|---|---|---|
| % | Diff. dimension resid. mat. machin. axis 2 | | | DOUBLE | 3/4 |
| ST, MT | ST: 50, MT: 50 | 0.0 | 1000.0 | IMMEDIATELY | 5.2 (840D), 3.2 (810D) |

| **9556** | **CTM_CYC_ROUGH_VAR_DEPTH** | | | H02, H03 | **REF.:** FBT |
|---|---|---|---|---|---|
| % | Percentage variable cutt. depth cont. rot. | | | BYTE | 3/4 |
| ST, MT | ST: 20, MT: | 0 | 50 | IMMEDIATELY | 6.3 |

| **9557** | **CTM_CYC_ROUGH_FEED_INT_TIME** | | | H02, H03 | **REF.:** FBMA |
|---|---|---|---|---|---|
| | Feed interrupt time contour turning | | | DOUBLE | 3/4 |
| ST, MT | ST: -1, MT: | *** | *** | IMMEDIATELY | 6.4 |

| **9558** | **CTM_CYC_ROUGH_INT_REL_DIST** | | | H02, H03 | **REF.:** FBMA |
|---|---|---|---|---|---|
| mm | Retr. path feed interrupt contour turning | | | DOUBLE | 3/4 |
| ST, MT | ST: 0, MT: | 0 | 10 | IMMEDIATELY | 6.4 |

| **9560** | **CTM_TURN_GROOV_TOOL_BEND** | | | H02, H03 | **REF.:** FBT |
|---|---|---|---|---|---|
| mm | Retr. due to tool bending plunge-turning | | | DOUBLE | 3/4 |
| ST, MT | ST: 0.1, MT: | 0.0 | 1.0 | IMMEDIATELY | 6.3 |

| **9561** | **CTM_TURN_GROOV_FREE_CUT_VAL** | | | H02, H03 | **REF.:** FBT |
|---|---|---|---|---|---|
| mm | Retr. depth prior to plunge turning oper. | | | DOUBLE | 3/4 |
| ST, MT | ST: 0.1, MT: | 0.0 | 1.0 | IMMEDIATELY | 6.3 |

| **9599** | **CTM_OPTION_MASK** | | | H03 | **REF.:** FBMA |
|---|---|---|---|---|---|
| - | ManualTurn settings | | | INTEGER | 2/2 |
| MT | MT: | *** | *** | IMMEDIATELY | 6.3 |

| **9600** | **CTM_SIMULATION_DEF_X** | | | H01, H02, H03, H05 | **REF.:** FBMA, FBSP |
|---|---|---|---|---|---|
| - | Simulation of default value X | | | INTEGER | 3/4 |
| SM, ST, MT, Emb | SM: 0, ST: 0, MT: 0, Emb: 0 | -10000 | 10000 | Power On | SW2.1 (810D), 4.3 (840D) |

| **9601** | **CTM_SIMULATION_DEF_Y** | | | H01, H02, H03, H05 | **REF.:** FBMA, FBSP |
|---|---|---|---|---|---|
| - | Simulation default value Z | | | INTEGER | 3/4 |
| SM, ST, MT, Emb | SM: 0, ST: 0, MT: 0, Emb: 0 | -10000 | 10000 | Power On | SW2.1 (810D), 4.3 (840D) |

© Siemens AG 2004 All Rights Reserved

| **9602** | **CTM_SIMULATION_DEF_VIS_AREA** | | | H01, H02, H03, H05 | **REF.:** FBMA, FBSP |
|---|---|---|---|---|---|
| - | Simulation of display area default value | | | INTEGER | 3/4 |
| SM, ST, MT, Emb | SM: 100, ST: 100, MT: 100, Emb: 100 | -10000 | 10000 | Power On | SW2.1 (810D), 4.3 (840D) |

| **9603** | **CTM_SIMULATION_MAX_X** | | | H01, H02, H03, H05 | **REF.:** FBMA, FBSP |
|---|---|---|---|---|---|
| - | Simulation of maximum display X | | | INTEGER | 3/4 |
| SM, ST, MT, Emb | SM: 0, ST: 0, MT: 0, Emb: 0 | -10000 | 10000 | Power On | SW2.1 (810D), 4.3 (840D) |

| **9604** | **CTM_SIMULATION_MAX_Y** | | | H01, H02, H03, H05 | **REF.:** FBMA, FBSP |
|---|---|---|---|---|---|
| - | Simulation maximum display Z | | | INTEGER | 3/4 |
| SM, ST, MT, Emb | SM: 0, ST: 0, MT: 0, Emb: 0 | -10000 | 10000 | Power On | 840D SW 4.3, 810D SW 2.1 |

| **9605** | **CTM_SIMULATION_MAX_VIS_AREA** | | | H01, H02, H03, H05 | **REF.:** FBMA, FBSP |
|---|---|---|---|---|---|
| - | Simulation of maximum display area | | | INTEGER | 3/4 |
| SM, ST, MT, Emb | SM: 1000, ST: 1000, MT: 1000, Emb: 1000 | -10000 | 10000 | Power On | 840D SW 4.3, 810D SW 2.1 |

| **9606** | **CTM_SIMULATION_TIME_NEW_POS** | | | H01, H02, H03, H05 | **REF.:** FBMA, FBT |
|---|---|---|---|---|---|
| - | Simulation of actual value update rate | | | INTEGER | 3/4 |
| SM, ST, MT, Emb | SM: 250, ST: 350, MT: 250, Emb: 100 | 0 | 4000 | Power On | 840D SW 4.3, 810D SW 2.1, ST 6.1 |

| **9607** | **CTM_ENABLE_RAPID_FEED** | | | H03 | **REF.:** FBMA |
|---|---|---|---|---|---|
| - | Enable selection option rapid traverse | | | BYTE | 3/4 |
| MT | MT: 1 | 0 | 1 | IMMEDIATELY | 840D SW 4.3, 810D SW 2.1 |

| **9608** | **CTM_ENABLE_FEED_P_MIN** | | | H03 | **REF.:** FBMA |
|---|---|---|---|---|---|
| - | Enable selection option feed in mm/min | | | BYTE | 3/4 |
| MT | MT: 1 | 0 | 1 | IMMEDIATELY | 840D SW 4.3, 810D SW 2.1 |

| **9609** | **CTM_SPEED_FIELD_DISPLAY_RES** | | | H03 | **REF.:** FBMA |
|---|---|---|---|---|---|
| - | Decimal places in speed entry field | | | BYTE | 3/4 |
| MT | MT: 0 | 0 | 4 | IMMEDIATELY | 840D SW 4.3, 810D SW 2.1 |

| **9610** | **CTM_POS_COORDINATE_SYSTEM** | | | H03, H05 | **REF.:** FBMA |
|---|---|---|---|---|---|
| - | Position of coord. system for turning | | | BYTE | 3/4 |
| MT, Adv, Emb | MT: 2, Adv: 2, Emb: 2 | 0 | 7 | IMMEDIATELY | 840D SW 4.3, 810D SW 2.1 |

© Siemens AG 2004 All Rights Reserved

| **9611** | **CTM_CROSS_AX_DIAMETER_ON** | | | H02, H03, H05 | **REF.:** FBMA, FBT |
|---|---|---|---|---|---|
| - | Diameter display active for transv. axes | | | BYTE | 3/4 |
| ST, MT, Emb | ST: 1, MT: 1, Emb: 1 | 0 | 1 | IMMEDIATELY | 840D SW 4.3, 810D SW 2.1, ST 6.1 |

| **9612** | **CTM_TEACH_STORE_MANUAL_ABS** | | | H03 | **REF.:** FBMA |
|---|---|---|---|---|---|
| - | Save setup motions as absolute values | | | BYTE | 3/4 |
| MT | MT: 1 | 0 | 1 | IMMEDIATELY | 840D SW 4.3, 810D SW 2.1 |

| **9613** | **CTM_TEACH_STORE_START_ABS** | | | H03 | **REF.:** FBMA |
|---|---|---|---|---|---|
| - | Save starting position as absolute value | | | BYTE | 3/4 |
| MT | MT: 1 | 0 | 1 | IMMEDIATELY | 840D SW 4.3, 810D SW 2.1 |

| **9614** | **CTM_TEACH_STORE_MANUAL_AUTO** | | | H03 | **REF.:** FBMA |
|---|---|---|---|---|---|
| - | Save setup motions automatically | | | BYTE | 3/4 |
| MT | MT: 1 | 0 | 1 | IMMEDIATELY | 840D SW 4.3, 810D SW 2.1 |

| **9615** | **CTM_TEACH_HANDW_FEED** | | | H03 | **REF.:** FBMA |
|---|---|---|---|---|---|
| - | Handwheel feedrate | | | BYTE | 3/4 |
| MT | MT: 0 | 0 | 2 | IMMEDIATELY | 840D SW 4.3, 810D SW 2.1 |

| **9616** | **CTM_TEACH_HANDW_FEED_P_MIN** | | | H03 | **REF.:** FBMA |
|---|---|---|---|---|---|
| mm/min | Path feed | | | DOUBLE | 3/4 |
| MT | MT: 10 | 1 | 3000 | IMMEDIATELY | 840D SW 4.3, 810D SW 2.1 |

| **9617** | **CTM_TEACH_HANDW_FEED_P_REV** | | | H03 | **REF.:** FBMA |
|---|---|---|---|---|---|
| | Revolutional feedrate | | | DOUBLE | 3/4 |
| MT | MT: 1 | 0.01 | 10000 | IMMEDIATELY | 840D SW 4.3, 810D SW 2.1 |

| **9618** | **CTM_ENABLE_C_AXIS** | | | H03 | **REF.:** FBMA |
|---|---|---|---|---|---|
| - | Enable C axis for interface | | | BYTE | 3/4 |
| MT | MT: 1 | 0 | 2 | Power On | 840D SW 4.3, 810D SW 2.1 |

| **9619** | **CTM_G91_DIAMETER_ON** | | | H02, H03, H05 | **REF.:** FBMA, FBT |
|---|---|---|---|---|---|
| - | Incremental infeed | | | BYTE | 3/4 |
| ST, MT, Emb | ST: 0, MT: 0, Emb: 1 | 0 | 1 | IMMEDIATELY | 840D SW 4.3, 810D SW 2.1, ST 6.1 |

| **9620** | **CTM_CYCLE_SAFETY_CLEARANCE** | | | H03 | **REF.:** FBMA |
|---|---|---|---|---|---|
| mm | Safety clearance ManualTurn cycles | | | DOUBLE | 3/4 |
| MT | MT: 1 | 0.0 | 1000 | IMMEDIATELY | 840D SW 4.3, 810D SW 2.1 |

© Siemens AG 2004 All Rights Reserved

| 9621 | CTM_CYCLE_DWELL_TIME | | | H03 | REF.: FBMA |
|---|---|---|---|---|---|
| | Tool clearance time for cycles | | | DOUBLE | 3/4 |
| MT | MT: -1 | -100 | 100 | IMMEDIATELY | 840D SW 4.3, 810D SW 2.1 |

| 9622 | CTM_ENABLE_REFPOINT | | | H03 | REF.: FBMA |
|---|---|---|---|---|---|
| - | Enable ref. pt. approach for ManualTurn | | | REAL | 3/4 |
| MT | MT: 1 | 0 | 1 | IMMEDIATELY | 840D SW 4.3, 810D SW 2.1 |

| 9623 | CTM_START_WITHOUT_REFPOINT | | | H03 | REF.: FBMA |
|---|---|---|---|---|---|
| - | Enable NC start without referenced axes | | | BYTE | 3/4 |
| MT | MT: 0 | 0 | 1 | Power On | 840D SW 4.3, 810D SW 2.1 |

| 9624 | CTM_MODE_SELECT_BY_SOFTKEY | | | H03 | REF.: FBMA |
|---|---|---|---|---|---|
| - | Mode switchover via vertical softkeys | | | BYTE | 3/4 |
| MT | MT: 0 | 0 | 1 | Power On | 840D SW 4.3, 810D SW 2.1 |

| 9625 | CTM_CUSTOMER_START_PICTURE | | | H03 | REF.: FBMA |
|---|---|---|---|---|---|
| - | Customer start-up screen | | | BYTE | 3/4 |
| MT | MT: 0 | 0 | 1 | Power On | 840D SW 4.3, 810D SW 2.1 |

| 9626 | CTM_TRACE | | | H01, H02, H03 | REF.: FBMA |
|---|---|---|---|---|---|
| - | Testflags f. intern ManualTurn diagnosis | | | REAL | 3/4 |
| SM, ST, MT | SM: 1, ST: 1, MT: 1 | 0 | 0xFFFF | IMMEDIATELY | 840D SW 4.3, 810D SW 2.1 |

| 9626 | CTM_TRACE | | | H01, H02, H03 | REF.: FBMA |
|---|---|---|---|---|---|
| - | Testflags f. intern ManualTurn diagnosis | | | REAL | 3/4 |
| SM, ST, MT | SM: 1, ST: 1, MT: 1 | 0 | 0xFFFF | IMMEDIATELY | 840D SW 4.3, 810D SW 2.1 |

| 9627 | CTM_COUNT_GEAR_STEPS | | | H03 | REF.: FBMA |
|---|---|---|---|---|---|
| - | Number of gear stages | | | BYTE | 3/4 |
| MT | MT: 1 | 0 | 5 | IMMEDIATELY | 840D SW 4.3, 810D SW 2.1 |

| 9628 | CTM_TOOL_INPUT_DIAM_ON | | | H03 | REF.: FBMA |
|---|---|---|---|---|---|
| - | Display tool data X as diameter | | | BYTE | 3/4 |
| MT | MT: 0 | 0 | 1 | IMMEDIATELY | 840D SW 4.3, 810D SW 2.1 |

| 9629 | CTM_WEAR_INPUT_DIAM_ON | | | H03 | REF.: FBMA |
|---|---|---|---|---|---|
| - | Display tool wear data X diameter | | | BYTE | 3/4 |
| MT | MT: 0 | 0 | 1 | IMMEDIATELY | 840D SW 4.3, 810D SW 2.1 |

© Siemens AG 2004 All Rights Reserved

| **9630** | **CTM_FIN_FEED_PERCENT** | | | H02, H03 | **REF.:** FBMA, FBT |
|---|---|---|---|---|---|
| % | Roughing feedrate in percent | | | REAL | 3/4 |
| ST, MT | ST: 100, MT: 100 | 1 | 100 | IMMEDIATELY | 840D SW 4.3, 810D SW 2.3, ST 6.1 |

| **9631** | **CTM_CYCLE_DWELL_TIME_SEC** | | | H03 | **REF.:** FBMA |
|---|---|---|---|---|---|
| | Dwell time for cycles in seconds | | | DOUBLE | 3/4 |
| MT | MT: 1 | 0 | 100 | IMMEDIATELY | 840D SW 4.4, 810D SW 2.4 |

| **9632** | **CTM_ANGLE_REFERENCE_AXIS** | | | H03, H05 | **REF.:** FBMA |
|---|---|---|---|---|---|
| - | Angle reference axis<br>1: 1st axis<br>2: 2nd axis | | | REAL | 3/4 |
| MT, Emb | MT: 1, Emb: 1 | 0 | 1 | IMMEDIATELY | 840D SW 4.4, 810D SW 2.4 |

| **9633** | **CTM_INC_DEC_FEED_PER_MIN** | | | H03 | **REF.:** FBMA |
|---|---|---|---|---|---|
| mm/min | Increments for feedrate in mm/min | | | DOUBLE | 3/4 |
| MT | MT: 10 | 0.001 | 1000 | IMMEDIATELY | 840D SW 4.4, 810D SW 2.4 |

| **9634** | **CTM_INC_DEC_FEED_PER_ROT** | | | H03 | **REF.:** FBMA |
|---|---|---|---|---|---|
| mm | Increments for feedrate in mm/rev | | | DOUBLE | 3/4 |
| MT | MT: 0.1 | 0.001 | 10 | IMMEDIATELY | 840D SW 4.4, 810D SW 2.4 |

| **9636** | **CTM_ENABLE_S_TOOL_TABLE** | | | H03 | **REF.:** FBMA |
|---|---|---|---|---|---|
| - | Enable cutting speed from tool table | | | BYTE | 3/4 |
| MT | MT: 0 | 0 | 1 | IMMEDIATELY | 840D SW 4.4, 810D SW 2.4 |

| **9637** | **CTM_MAX_INP_FEED_P_MIN** | | | H03 | **REF.:** FBMA |
|---|---|---|---|---|---|
| mm/min | Upper input limit for feedrate in mm/min | | | DOUBLE | 3/4 |
| MT | MT: 2000 | 0 | 100000 | IMMEDIATELY | 840D SW 4.4, 810D SW 2.4 |

| **9638** | **CTM_MAX_INP_FEED_P_ROT** | | | H03 | **REF.:** FBMA |
|---|---|---|---|---|---|
| mm | Upper input limit for feedrate in mm/rev | | | DOUBLE | 3/4 |
| MT | MT: 1 | 0 | 10000 | IMMEDIATELY | 840D SW 4.4, 810D SW 2.4 |

| **9639** | **CTM_MAX_TOOL_WEAR** | | | H03, H05 | **REF.:** FBMA |
|---|---|---|---|---|---|
| mm | Upper limit tool wear input | | | DOUBLE | 3/4 |
| MT, Adv | MT: 1, Adv: 1 | 0 | 10 | Power On | 840D SW 4.4, 810D SW 2.4 |

| **9640** | **CTM_ENABLE_CALC_THREAD_PITC** | | | H01, H02, H03 | **REF.:** FBMA |
|---|---|---|---|---|---|
| - | Automatic calculation of thread depth | | | BYTE | 3/4 |
| SM, ST, MT | SM: 0, ST: 0, MT: 0 | 0 | 1 | IMMEDIATELY | 840D SW 4.4, 810D SW 2.4 |

© Siemens AG 2004 All Rights Reserved

| 9641 | CTM_ENABLE_G_CODE_INPUT | | | H03 | REF.: FBMA |
|---|---|---|---|---|---|
| - | Enable of G code input | | | BYTE | 3/4 |
| MT | MT: 0 | 0 | 1 | IMMEDIATELY | 840D SW 4.4, 810D SW 2.4 |

| 9642 | CTM_ENABLE_CIRCLE_HOLE_CYCL | | | H03 | REF.: FBMA |
|---|---|---|---|---|---|
| - | Enable drilling of hole circle | | | BYTE | 3/4 |
| MT | MT: 0 | 0 | 1 | IMMEDIATELY | 840D SW 4.4, 810D SW 2.4 |

| 9643 | CTM_ENABLE_DRIVEN_TOOL | | | H03 | REF.: FBMA |
|---|---|---|---|---|---|
| - | Enable support of driven tools | | | BYTE | 3/4 |
| MT | MT: 0 | 0 | 2 | IMMEDIATELY | 840D SW 4.4, 810D SW 2.4 |

| 9644 | CTM_CIRC_TAP_DWELL_TIME_1 | | | H03 | REF.: FBMA |
|---|---|---|---|---|---|
| | Dwell time bottom, tapping on hole circle | | | DOUBLE | 3/4 |
| MT | MT: 0 | 0 | 100 | IMMEDIATELY | 840D SW 4.4, 810D SW 2.4 |

| 9645 | CTM_CIRC_TAP_DWELL_TIME_2 | | | H03 | REF.: FBMA |
|---|---|---|---|---|---|
| | Dwell time top, tapping on hole circle | | | DOUBLE | 3/4 |
| MT | MT: 0 | 0 | 100 | IMMEDIATELY | 840D SW 4.4, 810D SW 2.4 |

| 9646 | CTM_FACTOR_O_CALC_THR_PITCH | | | H01, H02, H03 | REF.: FBMA, FBT |
|---|---|---|---|---|---|
| - | Mode for return dist. stock rem. ext.mach. | | | DOUBLE | 3/4 |
| SM, ST, MT | SM: 0.6134, ST: 0.6134, MT: 0.6134 | *** | *** | IMMEDIATELY | 6.3 |

| 9647 | CTM_FACTOR_I_CALC_THR_PITCH | | | H01, H02, H03 | REF.: FBMA, FBT |
|---|---|---|---|---|---|
| - | Mode for return dist. stock rem. int.mach. | | | DOUBLE | 3/4 |
| SM, ST, MT | SM: 0.5413, ST: 0.5413, MT: | *** | *** | IMMEDIATELY | 6.3 |

| 9648 | CTM_ROUGH_O_RELEASE_DIST | | | H02, H03 | REF.: FBMA, FBT |
|---|---|---|---|---|---|
| mm | Return dist. stock rem. for ext.machining | | | DOUBLE | 3/4 |
| ST, MT | ST: 1.0, MT: | -1 | 100 | IMMEDIATELY | 840D SW 4.4, 810D SW 2.4, ST 6.1 |

| 9649 | CTM_ROUGH_I_RELEASE_DIST | | | H02, H03 | REF.: FBMA, FBT |
|---|---|---|---|---|---|
| mm | Return dist. stock rem. for int.machining | | | DOUBLE | 3/4 |
| ST, MT | ST: 0.5, MT: 0.5 | -1 | 100 | IMMEDIATELY | 840D SW 4.4, 810D SW 2.4, ST 6.1 |

© Siemens AG 2004 All Rights Reserved

| **9650** | **CMM_POS_COORDINATE_SYSTEM** | | | H01, H02, H05 | **REF.:** FBSP, FBT |
|---|---|---|---|---|---|
| - | Coordinate system position | | | BYTE | 3/4 |
| SM, ST, Adv, Emb | SM: 0, ST: 34, Adv: 0, Emb: 0 | 0 | 47 | IMMEDIATELY | SW4.3 , ST 6.1 |

| **9651** | **CMM_TOOL_MANAGEMENT** | | | H01, H02, H05 | **REF.:** FBSP, FBT |
|---|---|---|---|---|---|
| - | Tool management concept | | | BYTE | 3/4 |
| SM, ST, Adv, Emb | SM: 4, ST: 4, Adv: 4, Emb: 4 | 1 | 4 | Power On | 6.1, ST 6.1 |

| **9652** | **CMM_TOOL_LIFE_CONTROL** | | | H01, H02, H05 | **REF.:** FBSP, FBT |
|---|---|---|---|---|---|
| - | Tool monitoring | | | BYTE | 3/4 |
| SM, ST, Adv, Emb | SM: 1, ST: 1, Adv: 1, Emb: 1 | 0 | 1 | Power On | 6.1 |

| **9653** | **CMM_ENABLE_A_AXIS** | | | H01 | **REF.:** FBSP |
|---|---|---|---|---|---|
| - | Enable 4th axis for user interface | | | BYTE | 3/4 |
| SM | SM: 0 | 0 | 3 | IMMEDIATELY | 840D SW 4.3, 810D SW 2.3 |

| **9654** | **CMM_SPEED_FIELD_DISPLAY_RES** | | | H01, H02 | **REF.:** FBSP, FBT |
|---|---|---|---|---|---|
| - | Decimal places in speed entry field | | | BYTE | 3/4 |
| SM, ST | SM: 0, ST: 0 | 0 | 4 | IMMEDIATELY | 840D SW 4.3, 810D SW 2.3, ST 6.1 |

| **9655** | **CMM_CYC_PECKING_DIST** | | | H01 | **REF.:** FBSP |
|---|---|---|---|---|---|
| mm | Amount of retract.for deep hole drilling | | | DOUBLE | 3/4 |
| SM | SM: -1 | -1.0 | 100.0 | IMMEDIATELY | 840D SW 4.3, 810D SW 2.3 |

| **9656** | **CMM_CYC_DRILL_RELEASE_DIST** | | | H01, H02 | **REF.:** FBSP |
|---|---|---|---|---|---|
| mm | Amount of retraction for boring | | | DOUBLE | 3/4 |
| SM, ST | SM: -1, ST: 0.1 | -1.0 | 10.0 | IMMEDIATELY | 840D SW 4.3, 810D SW 2.3 |

| **9657** | **CMM_CYC_MIN_CONT_PO_TO_RAD** | | | H01, H02 | **REF.:** FBSP, FBT |
|---|---|---|---|---|---|
| % | Deviation from minimum cutter radius | | | REAL | 3/4 |
| SM, ST | SM: 5, ST: 5 | 0 | 50 | IMMEDIATELY | 840D SW 4.3, 810D SW 2.3, ST 6.1 |

| **9658** | **CMM_CYC_MAX_CONT_PO_TO_RAD** | | | H01, H02 | **REF.:** FBSP, FBT |
|---|---|---|---|---|---|
| mm | Deviation from maximum cutter radius | | | DOUBLE | 3/4 |
| SM, ST | SM: 0.01, ST: 0.01 | 0.0 | 10 | IMMEDIATELY | 840D SW 4.3, 810D SW 2.3, ST 6.1 |

© Siemens AG 2004 All Rights Reserved

| **9659** | **CMM_CYC_DRILL_RELEASE_ANGLE** | | | H01 | **REF.:** FBSP |
|---|---|---|---|---|---|
| degrees | Retraction angle for boring | | | DOUBLE | 3/4 |
| SM | SM: -1 | -1.0 | 360.0 | IMMEDIATELY | 840D SW 4.3, 810D SW 2.3 |

| **9660** | **CMM_ENABLE_PLANE_CHANGE** | | | H01 | **REF.:** FBSP |
|---|---|---|---|---|---|
| - | Switch to machining plane | | | BYTE | 3/4 |
| SM | SM: 1 | 0 | 1 | IMMEDIATELY | 840D SW 4.3, 810D SW 2.3 |

| **9661** | **CMM_ENABLE_CUSTOMER_M_CODES** | | | H01, H02, H05 | **REF.:** FBSP |
|---|---|---|---|---|---|
| - | Entry of customized M commands | | | BYTE | 3/4 |
| SM, ST, Adv, Emb | SM: 0, ST: 0, Adv: 4, Emb: 0 | 0 | 4 | Power On | 840D SW 4.3, 810D SW 2.3 |

| **9662** | **CMM_COUNT_GEAR_STEPS** | | | H01 | **REF.:** FBSP |
|---|---|---|---|---|---|
| - | Number of gear stages | | | BYTE | 3/4 |
| SM | SM: 1 | 0 | 5 | IMMEDIATELY | 840D SW 4.3, 810D SW 2.3 |

| **9663** | **CMM_TOOL_DISPLAY_IN_DIAM** | | | H01, H02, H05 | **REF.:** FBSP, FBT |
|---|---|---|---|---|---|
| - | Display of radius/diameter for tool | | | BYTE | 3/4 |
| SM, ST, Adv, Emb | SM: 1, ST: 1, Adv: 1, Emb: 1 | 0 | 1 | Power On | 840D SW 4.3, 810D SW 2.3, ST 6.1 |

| **9664** | **CMM_MAX_INP_FEED_P_MIN** | | | H01, H02 | **REF.:** FBSP, FBT |
|---|---|---|---|---|---|
| mm/min | Feedrate in mm/min<br>9665 Feedrate in mm/rev | | | DOUBLE | 3/4 |
| SM, ST | SM: 10000.0, ST: 10000.0 | 0 | 100000 | IMMEDIATELY | 840D SW 4.3, 810D SW 2.3, ST 6.1 |

| **9665** | **CMM_MAX_INP_FEED_P_ROT** | | | H01, H02 | **REF.:** FBSP, FBT |
|---|---|---|---|---|---|
| | Feedrate in mm/rev | | | DOUBLE | 3/4 |
| SM, ST | SM: 1.0, ST: 1.0 | 0 | 10 | IMMEDIATELY | 840D SW 4.3, 810D SW 2.3, ST 6.1 |

| **9666** | **CMM_MAX_INP_FEED_P_TOOTH** | | | H01, H02 | **REF.:** FBSP, FBT |
|---|---|---|---|---|---|
| | Feedrate in mm/tooth | | | DOUBLE | 3/4 |
| SM, ST | SM: 1.0, ST: 1.0 | 0 | 5 | IMMEDIATELY | 840D SW 4.3, 810D SW 2.3, ST 6.1 |

© Siemens AG 2004 All Rights Reserved

| **9667** | **CMM_FOLLOW_ON_TOOL_ACTIVE** | | | H01, H02 | **REF.:** FBSP, FBT |
|---|---|---|---|---|---|
| - | Tool preselection active | | | BYTE | 3/4 |
| SM, ST | SM: 1, ST: 0 | 0 | 1 | IMMEDIATELY | 840D SW 4.3, 810D SW 2.3, ST 6.1 |

| **9668** | **CMM_M_CODE_COOLANT_I_AND_II** | | | H01, H02 | **REF.:** FBSP, FBT |
|---|---|---|---|---|---|
| - | M code coolants I and II | | | INTEGER | 3/4 |
| SM, ST | SM: -1, ST: -1 | -1 | 32767 | IMMEDIATELY | 840D SW 4.4, 810D SW 2.4, ST 6.1 |

| **9669** | **CMM_FACE_MILL_EFF_TOOL_DIAM** | | | H01, H02 | **REF.:** FBSP |
|---|---|---|---|---|---|
| % | Effective mill diameter for face milling | | | DOUBLE | 3/4 |
| SM, ST | SM: 85.0, ST: 85.0 | 50.0 | 100.0 | IMMEDIATELY | 840D SW 4.4, 810D SW 2.4 |

| **9670** | **CMM_START_RAD_CONTOUR_POCKE** | | | H01, H02 | **REF.:** FBSP, FBT |
|---|---|---|---|---|---|
| mm | Approach circle rad. finish. cont. pock. | | | DOUBLE | 3/4 |
| SM, ST | SM: -1.0, ST: -1.0 | -1.0 | 100.0 | IMMEDIATELY | 840D SW 4.4, 810D SW 2.4, ST 6.1 |

| **9671** | **CMM_TOOL_LOAD_DEFAULT_MAG** | | | H01, H02 | **REF.:** FBSP |
|---|---|---|---|---|---|
| - | Load default magazine tool | | | BYTE | 3/4 |
| SM, ST | SM: , ST: | 0 | 30 | Power On | 6.4 |

| **9672** | **CMM_FIXED_TOOL_PLACE** | | | H01, H02, H05 | **REF.:** FBSP, FBT |
|---|---|---|---|---|---|
| - | Fixed location coding | | | BYTE | 3/4 |
| SM, ST, Adv, Emb | SM: 0, ST: 1, Adv: 0, Emb: 0 | 0 | 1 | Power On | 840D SW 4.4, 810D SW 2.4, ST 6.1 |

| **9673** | **CMM_TOOL_LOAD_STATION** | | | H01, H02, H05 | **REF.:** FBSP, FBT |
|---|---|---|---|---|---|
| - | Number of load station | | | BYTE | 3/4 |
| SM, ST, Adv, Emb | SM: 1, ST: 1, Adv: 1, Emb: 1 | 1 | 2 | Power On | 840D SW 4.4, 810D SW 2.4, ST 6.1 |

| **9674** | **CMM_ENABLE_TOOL_MAGAZINE** | | | H01, H02, H05 | **REF.:** FBSP, FBT |
|---|---|---|---|---|---|
| - | Display of magazine list | | | BYTE | 3/4 |
| SM, ST, Adv, Emb | SM: 1, ST: 1, Adv: 1, Emb: 1 | 0 | 1 | Power On | 840D SW 4.4, 810D SW 2.4, ST 6.1 |

© Siemens AG 2004 All Rights Reserved

| **9675** | **CMM_CUSTOMER_START_PICTURE** | | | H01, H02 | **REF.:** FBSP, FBT |
|---|---|---|---|---|---|
| - | Customer start-up screen | | | BYTE | 3/4 |
| SM, ST | SM: 0, ST: 0 | 0 | 1 | IMMEDIATELY | 840D SW 4.4, 810D SW 2.4 mit SM |

| **9676** | **CMM_DIRECTORY_SOFTKEY_PATH1** | | | H01, H02, H05 | **REF.:** FBSP, FBT |
|---|---|---|---|---|---|
| - | Path to drive names in directory manag. | | | STRING | 3/4 |
| SM, ST, Adv, Emb | SM: '', ST: '', Adv: '', Emb: 0 | *** | *** | Power On | 840D SW 4.4, 810D SW 2.4 mit SM |

| **9677** | **CMM_DIRECTORY_SOFTKEY_PATH2** | | | H01, H02, H05 | **REF.:** FBSP, FBT |
|---|---|---|---|---|---|
| - | Path to drive names in directory manag. | | | STRING | 3/4 |
| SM, ST, Adv, Emb | SM: '', ST: '', Adv: '', Emb: 0 | *** | *** | Power On | 840D SW 4.4, 810D SW 2.4 mit SM |

| **9678** | **CMM_DIRECTORY_SOFTKEY_PATH3** | | | H01, H02, H05 | **REF.:** FBSP, FBT |
|---|---|---|---|---|---|
| - | Path to drive names in directory manag. | | | STRING | 3/4 |
| SM, ST, Adv, Emb | SM: '', ST: '', Adv: '', Emb: 0 | *** | *** | Power On | 840D SW 4.4, 810D SW 2.4 mit SM |

| **9679** | **CMM_DIRECTORY_SOFTKEY_PATH4** | | | H01, H02, H05 | **REF.:** FBSP, FBT |
|---|---|---|---|---|---|
| - | Path to drive names in directory manag. | | | STRING | 3/4 |
| SM, ST, Adv, Emb | SM: '', ST: '', Adv: '', Emb: 0 | *** | *** | Power On | 840D SW 4.4, 810D SW 2.4 mit SM |

| **9680** | **CMM_M_CODE_COOLANT_I** | | | H01, H02 | **REF.:** FBSP |
|---|---|---|---|---|---|
| - | M code coolant I | | | INTEGER | 3/4 |
| SM, ST | SM: 8, ST: 8 | 0 | 32767 | IMMEDIATELY | 840D SW 4.4, 810D SW 2.4 mit SM |

| **9681** | **CMM_M_CODE_COOLANT_II** | | | H01, H02 | **REF.:** FBSP |
|---|---|---|---|---|---|
| - | M code coolant II | | | INTEGER | 3/4 |
| SM, ST | SM: 7, ST: 7 | 0 | 32767 | IMMEDIATELY | 840D SW 4.4, 810D SW 2.4 mit SM |

| **9682** | **CMM_CYC_BGF_BORE_DIST** | | | H01 | **REF.:** FBSP |
|---|---|---|---|---|---|
| mm | Mode for return value boring | | | DOUBLE | 3/4 |
| SM | SM: 1 | 0.0 | 100.0 | IMMEDIATELY | 6.3 |

| **9684** | **CMM_M_CODE_TOOL_BITS_1** | | | H01, H02 | **REF.:** BAS |
|---|---|---|---|---|---|
| - | M code for tool-specific bits 1 | | | INTEGER | 3/4 |
| SM, ST | SM: 100, ST: 100 | -1 | 255 | IMMEDIATELY | 6.2 |

© Siemens AG 2004 All Rights Reserved

| **9685** | **CMM_M_CODE_TOOL_BITS_2** | | | H01, H02 | **REF.:** BAS |
|---|---|---|---|---|---|
| - | M code for tool-specific bits 2 | | | INTEGER | 3/4 |
| SM, ST | SM: 101, ST: 101 | -1 | 255 | IMMEDIATELY | 6.2 |

| **9686** | **CMM_M_CODE_COOLANT_OFF** | | | H01, H02 | **REF.:** BAS |
|---|---|---|---|---|---|
| - | M code for coolant OFF | | | INTEGER | 3/4 |
| SM, ST | SM: 9, ST: 9 | 0 | 32767 | IMMEDIATELY | 6.3 |

| **9687** | **CMM_TOOL_MOVE_DEFAULT_MAG** | | | H01, H02 | **REF.:** FBSP |
|---|---|---|---|---|---|
| - | Relocate default magazine tool | | | BYTE | 3/4 |
| SM, ST | SM: , ST: | 0 | 30 | Power On | 6.4 |

| **9690** | **CMM_OEM_FUNCTION_MASK_1** | | | H01 | **REF.:** BAS |
|---|---|---|---|---|---|
| - | OEM display machine data 1 | | | INTEGER | 6/6 |
| SM | SM: 0 | *** | *** | IMMEDIATELY | 6.2 |

| **9691** | **CMM_OEM_FUNCTION_MASK_2** | | | H01 | **REF.:** BAS |
|---|---|---|---|---|---|
| - | OEM display machine data 2 | | | INTEGER | 6/6 |
| SM | SM: 0 | *** | *** | IMMEDIATELY | 6.2 |

| **9703** | **CMM_INDEX_AXIS_4** | | | H01 | **REF.:** FBSP |
|---|---|---|---|---|---|
| - | Axis index for 4th axis | | | BYTE | 3/4 |
| SM | SM: 0 | 0 | 127 | IMMEDIATELY | 840D SW 5.3, 810D SW 3.3 |

| **9704** | **CMM_INDEX_AXIS_5** | | | H01 | **REF.:** FBSP |
|---|---|---|---|---|---|
| - | Axis index for 5th axis | | | BYTE | 3/4 |
| SM | SM: 0 | 0 | 127 | IMMEDIATELY | 840D SW 5.3, 810D SW 3.3 |

| **9705** | **CMM_INDEX_SPINDLE** | | | H01 | **REF.:** FBSP |
|---|---|---|---|---|---|
| - | Axis index for spindle | | | BYTE | 3/4 |
| SM | SM: 4 | 1 | 127 | IMMEDIATELY | 840D SW 5.3, 810D SW 3.3 |

| **9706** | **CMM_GEOAX_ASSIGN_AXIS_4** | | | H01 | **REF.:** FBSP |
|---|---|---|---|---|---|
| - | Assignment of 4th axis to geometry axis | | | BYTE | 3/4 |
| SM | SM: 0 | 0 | 3 | IMMEDIATELY | 6.4 |

| **9707** | **CMM_GEOAX_ASSIGN_AXIS_5** | | | H01 | **REF.:** FBSP |
|---|---|---|---|---|---|
| - | Assignment of 5th axis to geometry axis | | | BYTE | 3/4 |
| SM | SM: 0 | 0 | 3 | IMMEDIATELY | 6.4 |

| **9718** | **CMM_OPTION_MASK_2** | | | H01, H02 | **REF.:** FBSP, FBT |
|---|---|---|---|---|---|
| - | Settings for ShopMill 2 | | | INTEGER | 2/2 |
| SM, ST | SM: 0, ST: 2 | *** | *** | IMMEDIATELY | 6.3 |

| **9719** | **CMM_OPTION_MASK** | | | H01, H02 | **REF.:** FBSP |
|---|---|---|---|---|---|
| - | Settings for ShopMill | | | INTEGER | 2/2 |
| SM, ST | SM: 5, ST: 5 | *** | *** | IMMEDIATELY | 840D SW 5.3, 810D SW 3.3 |

© Siemens AG 2004 All Rights Reserved

| 9720 | CMM_ENABLE_B_AXIS | | | H01 | REF.: FBSP |
|---|---|---|---|---|---|
| - | Enable B axis | | | BYTE | 3/4 |
| SM | SM: 0 | 0 | 3 | IMMEDIATELY | 840D SW 4.4, 810D SW 2.4 mit SM |

| 9721 | CMM_ENABLE_TRACYL | | | H01 | REF.: FBSP |
|---|---|---|---|---|---|
| - | Enable cylinder periph. transformation | | | BYTE | 3/4 |
| SM | SM: 0 | 0 | 1 | IMMEDIATELY | 840D SW 4.4, 810D SW 2.4 mit SM |

| 9723 | CMM_ENABLE_SWIVELLING_HEAD | | | H01, H02 | REF.: FBSP |
|---|---|---|---|---|---|
| - | Enable inclinable heads | | | BYTE | 3/4 |
| SM, ST | SM: 0, ST: 0 | 0 | 1 | IMMEDIATELY | 840D SW 4.4, 810D SW 2.4 mit SM |

| 9724 | CMM_CIRCLE_RAPID_FEED | | | H01, H02 | REF.: FBT |
|---|---|---|---|---|---|
| mm/min | Rap. trav. feed positioning on circle path | | | DOUBLE | 3/4 |
| SM, ST | SM: 5000, ST: 5000 | 0 | 100000 | IMMEDIATELY | 840D SW 6.1, 810D SW 4.1 |

| 9725 | CMM_ENABLE_QUICK_M_CODES | | | H01, H02 | REF.: FBSP |
|---|---|---|---|---|---|
| - | Enable fast M functions | | | BYTE | 3/4 |
| SM, ST | SM: 0, ST: 0 | *** | *** | IMMEDIATELY | 6.4 |

| 9725 | CMM_ENABLE_QUICK_M_CODES | | | H01, H02 | REF.: FBSP |
|---|---|---|---|---|---|
| - | Enable fast M functions | | | BYTE | 3/4 |
| SM, ST | SM: 0, ST: 0 | *** | *** | IMMEDIATELY | 6.4 |

| 9726 | CMM_DISPLAY_MD_IS_METRIC | | | H01, H02 | REF.: FBSP |
|---|---|---|---|---|---|
| - | Display machine data unit (inch/mm) | | | BYTE | 3/4 |
| SM, ST | SM: 1, ST: 1 | *** | *** | IMMEDIATELY | 6.4 |

| 9727 | CMM_ENABLE_POS_A_B_AXIS | | | H01 | REF.: FBSP |
|---|---|---|---|---|---|
| - | A/B axis support enable | | | BYTE | 3/4 |
| SM | SM: | *** | *** | IMMEDIATELY | 6.4 |

| 9728 | CMM_DISPL_DIR_A_B_AXIS_INV | | | H01 | REF.: FBSP |
|---|---|---|---|---|---|
| - | Inversion A/B axis display direction | | | BYTE | 3/4 |
| SM | SM: | 0 | 1 | IMMEDIATELY | 6.4 |

| 9729 | CMM_G_CODE_TOOL_CHANGE_PROG | | | H01, H02 | REF.: FBSP |
|---|---|---|---|---|---|
| - | Program for tool change in G-Code | | | STRING | 3/4 |
| SM, ST | SM: , ST: | *** | *** | IMMEDIATELY | 6.4 |

| 9748 | CMM_MKS_POSITION_MAN_MEAS | | | H01 | REF.: FBSP |
|---|---|---|---|---|---|
| mm | Posit. of man. tool meas. with fixed point | | | DOUBLE | 3/4 |
| SM | SM: | *** | *** | IMMEDIATELY | 6.4 |

© Siemens AG 2004 All Rights Reserved

| **9749** | **CMM_ENABLE_MEAS_T_AUTO** | | | H01, H02 | **REF.:** FBSP, FBT |
|---|---|---|---|---|---|
| - | Enable automatic tool measuring | | | INTEGER | 3/4 |
| SM, ST | SM: 1, ST: 1 | 0 | 1 | IMMEDIATELY | 6.3 |

| **9750** | **CMM_MEAS_PROBE_INPUT** | | | H01, H02 | **REF.:** FBSP, FBT |
|---|---|---|---|---|---|
| - | Measuring input for workpiece probe | | | REAL | 3/4 |
| SM, ST | SM: 0, ST: 0 | 0 | 1 | IMMEDIATELY | 6.3 |

| **9751** | **CMM_MEAS_T_PROBE_INPUT** | | | H01, H02 | **REF.:** FBSP, FBT |
|---|---|---|---|---|---|
| - | Measuring input for tool probe | | | REAL | 3/4 |
| SM, ST | SM: 1, ST: 0 | 0 | 1 | IMMEDIATELY | 6.3 |

| **9752** | **CMM_MEASURING_DISTANCE** | | | H01, H02 | **REF.:** FBSP, FBT |
|---|---|---|---|---|---|
| mm | Max. meas. dist. f. workp. meas. in progr. | | | DOUBLE | 3/4 |
| SM, ST | SM: 5, ST: 5 | 1 | 1000 | IMMEDIATELY | 6.3 |

| **9753** | **CMM_MEAS_DIST_MAN** | | | H01, H02 | **REF.:** FBSP, FBT |
|---|---|---|---|---|---|
| mm | Max. meas. dist. f. manual workp. meas. | | | DOUBLE | 3/4 |
| SM, ST | SM: 10, ST: 10 | 0.01 | 1000 | IMMEDIATELY | 6.3 |

| **9754** | **CMM_MEAS_DIST_TOOL_LENGTH** | | | H01, H02 | **REF.:** FBSP, FBT |
|---|---|---|---|---|---|
| mm | Max. meas. dist. f. tool lgth rotat. spin. | | | DOUBLE | 3/4 |
| SM, ST | SM: 2, ST: 10 | 0.001 | 1000 | IMMEDIATELY | 6.3 |

| **9755** | **CMM_MEAS_DIST_TOOL_RADIUS** | | | H01, H02 | **REF.:** FBSP, FBT |
|---|---|---|---|---|---|
| mm | Max. meas. dist. f. tool rad. rotat. spin. | | | DOUBLE | 3/4 |
| SM, ST | SM: 1, ST: 1 | 0.001 | 1000 | IMMEDIATELY | 6.3 |

| **9756** | **CMM_MEASURING_FEED** | | | H01, H02 | **REF.:** FBSP, FBT |
|---|---|---|---|---|---|
| mm/min | Meas. feedrate f. workpiece meas. | | | DOUBLE | 3/4 |
| SM, ST | SM: 300, ST: 300 | 10 | 5000 | IMMEDIATELY | 6.3 |

| **9757** | **CMM_FEED_WITH_COLL_CTRL** | | | H01, H02 | **REF.:** FBSP, FBT |
|---|---|---|---|---|---|
| mm/min | Plane feed with collision detection | | | DOUBLE | 3/4 |
| SM, ST | SM: 1000, ST: 1000 | 10 | 5000 | IMMEDIATELY | 6.3 |

| **9758** | **CMM_POS_FEED_WITH_COLL_CTRL** | | | H01, H02 | **REF.:** FBSP, FBT |
|---|---|---|---|---|---|
| mm/min | Infeed rate with collision detection | | | DOUBLE | 3/4 |
| SM, ST | SM: 1000, ST: 1000 | 10 | 5000 | IMMEDIATELY | 6.3 |

© Siemens AG 2004 All Rights Reserved

| 9759 | CMM_MAX_CIRC_SPEED_ROT_SP | | | H01, H02 | REF.: FBSP, FBT |
|---|---|---|---|---|---|
| | Max.periph.speed f.tool meas.w.rot.spin. | | | DOUBLE | 3/4 |
| SM, ST | SM: 100, ST: 100 | 1 | 200 | IMMEDIATELY | 6.3 |

| 9760 | CMM_MAX_SPIND_SPEED_ROT_SP | | | H01, H02 | REF.: FBSP, FBT |
|---|---|---|---|---|---|
| | Max. speed f. tool meas. w. rot. spindle | | | DOUBLE | 3/4 |
| SM, ST | SM: 1000, ST: 1000 | 100 | 25000 | IMMEDIATELY | 6.3 |

| 9761 | CMM_MIN_FEED_ROT_SP | | | H01, H02 | REF.: FBSP, FBT |
|---|---|---|---|---|---|
| mm/min | Min. feedr. f. tool meas. w. rot.spindle | | | DOUBLE | 3/4 |
| SM, ST | SM: 10, ST: 10 | 1 | 1000 | IMMEDIATELY | 6.3 |

| 9762 | CMM_MEAS_TOL_ROT_SP | | | H01, H02 | REF.: FBSP, FBT |
|---|---|---|---|---|---|
| mm | Meas. acc. f. tool meas. w. rot. spindle | | | DOUBLE | 3/4 |
| SM, ST | SM: 0.01, ST: 0.01 | 0.001 | 1 | IMMEDIATELY | 6.3 |

| 9763 | CMM_TOOL_PROBE_TYPE | | | H01, H02 | REF.: FBSP, FBT |
|---|---|---|---|---|---|
| - | Type of tool probe | | | REAL | 3/4 |
| SM, ST | SM: 0, ST: 0 | 0 | 999 | IMMEDIATELY | 6.3 |

| 9764 | CMM_TOOL_PROBE_ALLOW_AXIS | | | H01, H02 | REF.: FBSP, FBT |
|---|---|---|---|---|---|
| - | Permiss. axis direct. tool probe | | | REAL | 3/4 |
| SM, ST | SM: 133, ST: 133 | 0 | 333 | IMMEDIATELY | 6.3 |

| 9765 | CMM_T_PROBE_DIAM_LENGTH_MEA | | | H01, H02 | REF.: FBSP, FBT |
|---|---|---|---|---|---|
| mm | Dia. of tool probe f. length measurement | | | DOUBLE | 3/4 |
| SM, ST | SM: 0, ST: 0 | 0 | 100000 | IMMEDIATELY | 6.3 |

| 9766 | CMM_T_PROBE_DIAM_RAD_MEAS | | | H01, H02 | REF.: FBSP, FBT |
|---|---|---|---|---|---|
| mm | Dia. of tool probe f. radius measurement | | | DOUBLE | 3/4 |
| SM, ST | SM: 0, ST: 0 | 0 | 100000 | IMMEDIATELY | 6.3 |

| 9767 | CMM_T_PROBE_DIST_RAD_MEAS | | | H01, H02 | REF.: FBSP, FBT |
|---|---|---|---|---|---|
| mm | Infeed f.top edge of t-probe f.rad.meas. | | | DOUBLE | 3/4 |
| SM, ST | SM: 0, ST: 0 | 0 | 100000 | IMMEDIATELY | 6.3 |

| 9768 | CMM_T_PROBE_APPROACH_DIR | | | H01, H02 | REF.: FBSP, FBT |
|---|---|---|---|---|---|
| - | Plane approach dir. tool probe | | | BYTE | 3/4 |
| SM, ST | SM: -1, ST: -1 | -2 | 2 | IMMEDIATELY | 6.3 |

| 9769 | CMM_FEED_FACTOR_1_ROT_SP | | | H01, H02 | REF.: FBSP |
|---|---|---|---|---|---|
| - | Feedrate fact. 1 tool meas. w. rot. spin. | | | DOUBLE | 3/4 |
| SM, ST | SM: 10, ST: 0 | 0 | 100 | IMMEDIATELY | 6.3 |

© Siemens AG 2004 All Rights Reserved

| **9770** | **CMM_FEED_FACTOR_2_ROT_SP** | | | H01, H02 | **REF.:** FBSP |
|---|---|---|---|---|---|
| - | Feedrate fact. 2 tool meas. w. rot. spin. | | | DOUBLE | 3/4 |
| SM, ST | SM: 0, ST: 0 | 0 | 50 | IMMEDIATELY | 6.3 |

| **9771** | **CMM_MAX_FEED_ROT_SP** | | | H01, H02 | **REF.:** FBSP |
|---|---|---|---|---|---|
| mm/min | Max. feedr. f. tool meas. w. rot. spindle | | | DOUBLE | 3/4 |
| SM, ST | SM: 20, ST: 20 | 1 | 1000 | IMMEDIATELY | 6.3 |

| **9772** | **CMM_T_PROBE_MEASURING_DIST** | | | H01, H02 | **REF.:** FBSP |
|---|---|---|---|---|---|
| mm | Meas.dist. f. tool meas. w. non-rot. spin. | | | DOUBLE | 3/4 |
| SM, ST | SM: 5, ST: 10 | 0.01 | 1000 | IMMEDIATELY | 6.3 |

| **9773** | **CMM_T_PROBE_MEASURING_FEED** | | | H01, H02 | **REF.:** FBSP |
|---|---|---|---|---|---|
| mm/min | Feedrate f. tool meas. w. non-rot. spindle | | | DOUBLE | 3/4 |
| SM, ST | SM: 300, ST: 300 | 10 | 5000 | IMMEDIATELY | 6.3 |

| **9774** | **CMM_T_PROBE_MANUFACTURER** | | | H01, H02 | **REF.:** FBSP |
|---|---|---|---|---|---|
| - | Tool probe manufacturer | | | INTEGER | 3/4 |
| SM, ST | SM: 0, ST: 0 | 0 | 2 | IMMEDIATELY | 6.3 |

| **9775** | **CMM_T_PROBE_OFFSET** | | | H01, H02 | **REF.:** FBSP |
|---|---|---|---|---|---|
| - | Tool meas. offset w. rot. spindle | | | INTEGER | 3/4 |
| SM, ST | SM: 0, ST: 0 | 0 | 2 | IMMEDIATELY | 6.3 |

| **9776** | **CMM_MEAS_SETTINGS** | | | H01, H02 | **REF.:** FBSP |
|---|---|---|---|---|---|
| - | Settings for measuring cycles | | | INTEGER | 3/4 |
| SM, ST | SM: 0, ST: | *** | *** | IMMEDIATELY | 6.4 |

| **9777** | **CMM_ENABLE_TIME_DISPLAY** | | | H01 | **REF.:** FBSP |
|---|---|---|---|---|---|
| - | Enable of the time display | | | BYTE | 3/4 |
| SM | SM: 127 | *** | *** | IMMEDIATELY | 6.4 |

| **9803** | **ST_INDEX_AXIS_4** | | | H02 | **REF.:** FBT |
|---|---|---|---|---|---|
| - | Axis index for 4th axis | | | BYTE | 3/4 |
| ST | ST: 5 | 0 | 127 | IMMEDIATELY | 840D SW 6.1, 810D SW 4.1 |

| **9804** | **ST_INDEX_SPINDLE_MAIN** | | | H02, H03 | **REF.:** FBT |
|---|---|---|---|---|---|
| - | Axis index for main spindle | | | BYTE | 3/4 |
| ST, MT | ST: 3, MT: | 1 | 127 | IMMEDIATELY | 840D SW 6.1, 810D SW 4.1 |

| **9805** | **ST_INDEX_SPINDLE_TOOL** | | | H02, H03 | **REF.:** FBT |
|---|---|---|---|---|---|
| - | Axis index for tool spindle | | | BYTE | 3/4 |
| ST, MT | ST: 4, MT: | 0 | 127 | IMMEDIATELY | 840D SW 6.1, 810D SW 4.1 |

| **9806** | **ST_INDEX_SPINDLE_SUB** | | | H02 | **REF.:** FBT |
|---|---|---|---|---|---|
| - | Axis index for counterspindle | | | BYTE | 3/4 |
| ST | ST: 6 | 0 | 127 | IMMEDIATELY | 840D SW 6.1, 810D SW 4.1 |

© Siemens AG 2004 All Rights Reserved

| **9807** | **ST_INDEX_AXIS_C** | | | H02 | **REF.:** FBT |
|---|---|---|---|---|---|
| - | Axis index for C axis | | | BYTE | 3/4 |
| ST | ST: 3 | 0 | 127 | IMMEDIATELY | 6.3 |

| **9810** | **ST_GEAR_STEPS_SPINDLE_MAIN** | | | H02 | **REF.:** FBT |
|---|---|---|---|---|---|
| - | Number of main spindle threads | | | BYTE | 3/4 |
| ST | ST: 0 | 0 | 5 | IMMEDIATELY | 840D SW 6.1, 810D SW 4.1 |

| **9811** | **ST_GEAR_STEPS_SPINDLE_TOOL** | | | H02 | **REF.:** FBT |
|---|---|---|---|---|---|
| - | Number of tool spindle threads | | | BYTE | 3/4 |
| ST | ST: 0 | 0 | 5 | IMMEDIATELY | 840D SW 6.1, 810D SW 4.1 |

| **9812** | **ST_GEAR_STEPS_SPINDLE_SUB** | | | H02 | **REF.:** FBT |
|---|---|---|---|---|---|
| - | Number of counter spindle threads | | | BYTE | 3/4 |
| ST | ST: 0 | 0 | 5 | IMMEDIATELY | 840D SW 6.1, 810D SW 4.1 |

| **9820** | **ST_MAGN_GLASS_POS_1** | | | H02 | **REF.:** FBT |
|---|---|---|---|---|---|
| mm | Measure zoom-in pos. to tool, 1st axis | | | DOUBLE | 3/4 |
| ST | ST: 0 | *** | *** | IMMEDIATELY | 840D SW 6.1, 810D SW 4.1 |

| **9821** | **ST_MAGN_GLASS_POS_2** | | | H02 | **REF.:** FBT |
|---|---|---|---|---|---|
| mm | Measure zoom-in pos. to tool, 2nd axis | | | DOUBLE | 3/4 |
| ST | ST: 0 | *** | *** | IMMEDIATELY | 840D SW 6.1, 810D SW 4.1 |

| **9822** | **ST_DISPL_DIR_MAIN_SPIND_M3** | | | H02 | **REF.:** FBT |
|---|---|---|---|---|---|
| - | Displ. direction of rot. main spindle M3 | | | BYTE | 3/4 |
| ST | ST: 0 | 0 | 1 | IMMEDIATELY | 840D SW 6.1, 810D SW 4.1 |

| **9823** | **ST_DISPL_DIR_SUB_SPIND_M3** | | | H02 | **REF.:** FBT |
|---|---|---|---|---|---|
| - | Displ. direction of rot. counterspindle M3 | | | BYTE | 3/4 |
| ST | ST: 0 | 0 | 1 | IMMEDIATELY | 840D SW 6.1, 810D SW 4.1 |

| **9824** | **ST_DISPL_DIR_MAIN_C_AX_INV** | | | H02 | **REF.:** FBT |
|---|---|---|---|---|---|
| - | Displ. dir. of rot. C axis main spin. M3 | | | BYTE | 3/4 |
| ST | ST: 0 | 0 | 1 | IMMEDIATELY | 840D SW 6.1, 810D SW 4.1 |

| **9825** | **ST_DISPL_DIR_SUB_C_AX_INV** | | | H02 | **REF.:** FBT |
|---|---|---|---|---|---|
| - | Displ. dir. of rot. C axis counterspin. M3 | | | BYTE | 3/4 |
| ST | ST: 0 | 0 | 1 | IMMEDIATELY | 840D SW 6.1, 810D SW 4.1 |

| **9826** | **ST_DEFAULT_DIR_TURN_TOOLS** | | | H02 | **REF.:** FBT |
|---|---|---|---|---|---|
| - | Main dir. of rot. for all turning tools | | | BYTE | 3/4 |
| ST | ST: 3 | 3 | 4 | Power On | 840D SW 6.1, 810D SW 4.1 |

© Siemens AG 2004 All Rights Reserved

| **9827** | **ST_DEFAULT_MACHINING_SENSE** | | | H02 | **REF.:** FBT |
|---|---|---|---|---|---|
| - | Basic sett. f. machining direction milling | | | BYTE | 3/4 |
| ST | ST: 0 | 0 | 1 | IMMEDIATELY | 840D SW 6.1, 810D SW 4.1 |

| **9828** | **ST_MEAS_T_PROBE_INPUT_SUB** | | | H02 | **REF.:** FBT |
|---|---|---|---|---|---|
| - | Meas. input f. tool probe counterspindle | | | REAL | 3/4 |
| ST | ST: 1 | 0 | 1 | IMMEDIATELY | 6.3 |

| **9829** | **ST_SPINDLE_CHUCK_TYPES** | | | H02 | **REF.:** FBT |
|---|---|---|---|---|---|
| - | Spindle chuck selection | | | BYTE | 3/4 |
| ST | ST: 0 | *** | *** | IMMEDIATELY | 6.4 |

| **9829** | **ST_SPINDLE_CHUCK_TYPES** | | | H02 | **REF.:** FBT |
|---|---|---|---|---|---|
| - | Spindle chuck selection | | | BYTE | 3/4 |
| ST | ST: 0 | *** | *** | IMMEDIATELY | 6.4 |

| **9830** | **ST_SPINDLE_PARA_ZL0** | | | H02 | **REF.:** FBT |
|---|---|---|---|---|---|
| mm | Main spindle chuck dimension | | | DOUBLE | 3/4 |
| ST | ST: 0 | *** | *** | IMMEDIATELY | 6.4 |

| **9831** | **ST_SPINDLE_PARA_ZL1** | | | H02 | **REF.:** FBT |
|---|---|---|---|---|---|
| mm | Counterspindle chuck dimension | | | DOUBLE | 3/4 |
| ST | ST: 0 | *** | *** | IMMEDIATELY | 6.4 |

| **9832** | **ST_SPINDLE_PARA_ZL2** | | | H02 | **REF.:** FBT |
|---|---|---|---|---|---|
| mm | Counterspindle stop dimension | | | DOUBLE | 3/4 |
| ST | ST: 0 | *** | *** | IMMEDIATELY | 6.4 |

| **9833** | **ST_SPINDLE_PARA_ZL3** | | | H02 | **REF.:** FBT |
|---|---|---|---|---|---|
| mm | Counterspindle jaw dimension | | | DOUBLE | 3/4 |
| ST | ST: 0 | *** | *** | IMMEDIATELY | 6.4 |

| **9840** | **ST_ENABLE_MAGN_GLASS** | | | H02 | **REF.:** FBT |
|---|---|---|---|---|---|
| - | Zoom-in under manual: tool meas. | | | BYTE | 3/4 |
| ST | ST: 0 | 0 | 1 | IMMEDIATELY | 840D SW 6.1, 810D SW 4.1 |

| **9841** | **ST_ENABLE_PART_OFF_RECEPT** | | | H02 | **REF.:** FBT |
|---|---|---|---|---|---|
| - | Enable receptacle function for cut-off | | | BYTE | 3/4 |
| ST | ST: 0 | 0 | 1 | IMMEDIATELY | 840D SW 6.1, 810D SW 4.1 |

| **9842** | **ST_ENABLE_TAILSTOCK** | | | H02 | **REF.:** FBT |
|---|---|---|---|---|---|
| - | Enable tailstock | | | BYTE | 3/4 |
| ST | ST: 0 | 0 | 1 | IMMEDIATELY | 6.2 |

| **9843** | **ST_ENABLE_SPINDLE_CLAMPING** | | | H02 | **REF.:** FBT |
|---|---|---|---|---|---|
| - | Spindle clamping enable (C axis) | | | BYTE | 3/4 |
| ST | ST: 0 | 0 | 1 | IMMEDIATELY | 6.3 |

© Siemens AG 2004 All Rights Reserved

| **9850** | **ST_CYCLE_THREAD_RETURN_DIST** | | | H02 | **REF.:** FBT |
|---|---|---|---|---|---|
| mm | Return distance f. thread turning | | | DOUBLE | 3/4 |
| ST | ST: 2 | 0.001 | 1000 | IMMEDIATELY | 840D SW 6.1, 810D SW 4.1 |

| **9851** | **ST_CYCLE_SUB_SP_WORK_POS** | | | H02 | **REF.:** FBT |
|---|---|---|---|---|---|
| mm | Retract position Z for counterspindle | | | DOUBLE | 3/4 |
| ST | ST: 0 | *** | *** | IMMEDIATELY | 840D SW 6.1, 810D SW 4.1 |

| **9852** | **ST_CYCLE_SUB_SP_DIST** | | | H02 | **REF.:** FBT |
|---|---|---|---|---|---|
| mm | Counterspindle: travel path to fixed stop | | | DOUBLE | 3/4 |
| ST | ST: 10 | 0.001 | 1000 | IMMEDIATELY | 840D SW 6.1, 810D SW 4.1 |

| **9853** | **ST_CYCLE_SUB_SP_FEED** | | | H02 | **REF.:** FBT |
|---|---|---|---|---|---|
| mm/min | Counterspindle: travel feed to fixed stop | | | DOUBLE | 3/4 |
| ST | ST: 0 | *** | *** | IMMEDIATELY | 840D SW 6.1, 810D SW 4.1 |

| **9854** | **ST_CYCLE_SUB_SP_FORCE** | | | H02 | **REF.:** FBT |
|---|---|---|---|---|---|
| | Counterspin.: travel force to fixed stop | | | BYTE | 3/4 |
| ST | ST: 10 | 1 | 100 | IMMEDIATELY | 840D SW 6.1, 810D SW 4.1 |

| **9855** | **ST_CYCLE_TAP_SETTINGS** | | | H02 | **REF.:** FBT |
|---|---|---|---|---|---|
| - | Tapping settings | | | INTEGER | 3/4 |
| ST | ST: 0 | *** | *** | IMMEDIATELY | 6.3 |

| **9856** | **ST_CYCLE_TAP_MID_SETTINGS** | | | H02 | **REF.:** FBT |
|---|---|---|---|---|---|
| - | Centric tapping settings | | | INTEGER | 3/4 |
| ST | ST: 0 | *** | *** | IMMEDIATELY | |

| **9857** | **ST_CYCLE_RET_DIST_FIXEDSTOP** | | | H02 | **REF.:** FBT |
|---|---|---|---|---|---|
| mm | Retr.path prior to chuck. after fixed stop | | | DOUBLE | 3/4 |
| ST | ST: 0 | 0 | 10 | IMMEDIATELY | 6.3 |

| **9858** | **ST_CYCLE_RET_DIST_PART_OFF** | | | H02 | **REF.:** FBT |
|---|---|---|---|---|---|
| mm | Retr. path prior to cut-off w. count.sp. | | | DOUBLE | 3/4 |
| ST | ST: 0 | 0 | 1 | IMMEDIATELY | 6.3 |

| **9859** | **ST_CYCLE_PART_OFF_CTRL_DIST** | | | H02 | **REF.:** FBT |
|---|---|---|---|---|---|
| mm | Path for cut-off check<br>Path for cut-off control | | | DOUBLE | 3/4 |
| ST | ST: 0.1 | 0 | 10 | IMMEDIATELY | 6.3 |

| **9860** | **ST_CYCLE_PART_OFF_CTRL_FEED** | | | H02 | **REF.:** FBT |
|---|---|---|---|---|---|
| mm/min | Feedrate for cut-off check | | | DOUBLE | 3/4 |
| ST | ST: 0 | *** | *** | IMMEDIATELY | |

| **9861** | **ST_CYCLE_PART_OFF_CTRL_FORC** | | | H02 | **REF.:** FBT |
|---|---|---|---|---|---|
| % | Force in percent for cut-off check | | | BYTE | 3/4 |
| ST | ST: 10 | 1 | 100 | IMMEDIATELY | 6.3 |

© Siemens AG 2004 All Rights Reserved

| **9862** | **ST_CYC_DRILL_MID_MAX_ECCENT** | | | H02 | **REF.:** FBT |
|---|---|---|---|---|---|
| mm | Max. center offset f. center boring | | | DOUBLE | 3/4 |
| ST | ST: 0.5 | 0.0 | 10.0 | IMMEDIATELY | 6.4 |

| **9898** | **ST_OPTION_MASK** | | | H02 | **REF.:** FBT |
|---|---|---|---|---|---|
| - | ShopTurn settings | | | INTEGER | 2/2 |
| ST | ST: 28672 | *** | *** | IMMEDIATELY | 6.3 |

| **9899** | **ST_TRACE** | | | H02 | **REF.:** FBT |
|---|---|---|---|---|---|
| - | Test flags internal ShopTurn diagnosis | | | REAL | 3/4 |
| ST | ST: 0 | 0 | 0xFFFF | IMMEDIATELY | 6.3 |

| **9899** | **ST_TRACE** | | | H02 | **REF.:** FBT |
|---|---|---|---|---|---|
| - | Test flags internal ShopTurn diagnosis | | | REAL | 3/4 |
| ST | ST: 0 | 0 | 0xFFFF | IMMEDIATELY | 6.3 |

| **9900** | **MD_TEXT_SWITCH** | | | H05 | **REF.:** - |
|---|---|---|---|---|---|
| - | Plaintexts instead of MD identifier | | | BOOL | 3/4 |
| OP30, Adv, Emb | OP30: 0, Adv: 0, Emb: 0 | *** | *** | IMMEDIATELY | SW2 |

| **9950** | **MD_NC_TEA_FILTER** | | | H05 | **REF.:** |
|---|---|---|---|---|---|
| - | General machine data display options | | | INTEGER | 0/0 |
| Emb | Emb: 67108865 | *** | *** | Power On | |

| **9950** | **MD_NC_TEA_FILTER** | | | H05 | **REF.:** |
|---|---|---|---|---|---|
| - | General machine data display options | | | INTEGER | 0/0 |
| Emb | Emb: 67108865 | *** | *** | Power On | |

| **9951** | **MD_NC_TEA_IDX_LIMIT** | | | H05 | **REF.:** |
|---|---|---|---|---|---|
| - | Index filter for general machine data | | | INTEGER | 0/0 |
| Emb | Emb: 0 | *** | *** | Power On | |

| **9952** | **MD_AX_TEA_FILTER** | | | H05 | **REF.:** |
|---|---|---|---|---|---|
| - | Axis machine data display options | | | INTEGER | 0/0 |
| Emb | Emb: 67108865 | *** | *** | Power On | |

| **9952** | **MD_AX_TEA_FILTER** | | | H05 | **REF.:** |
|---|---|---|---|---|---|
| - | Axis machine data display options | | | INTEGER | 0/0 |
| Emb | Emb: 67108865 | *** | *** | Power On | |

| **9953** | **MD_AX_TEA_IDX_LIMIT** | | | H05 | **REF.:** |
|---|---|---|---|---|---|
| - | Index filter for axis machine data | | | INTEGER | 0/0 |
| Emb | Emb: 0 | *** | *** | Power On | |

| **9954** | **MD_CH_TEA_FILTER** | | | H05 | **REF.:** |
|---|---|---|---|---|---|
| - | Channel machine data display options | | | INTEGER | 0/0 |
| Emb | Emb: 33554433 | *** | *** | Power On | |

| **9954** | **MD_CH_TEA_FILTER** | | | H05 | **REF.:** |
|---|---|---|---|---|---|
| - | Channel machine data display options | | | INTEGER | 0/0 |
| Emb | Emb: 33554433 | *** | *** | Power On | |

| **9955** | **MD_CH_TEA_IDX_LIMIT** | | | H05 | **REF.:** |
|---|---|---|---|---|---|
| - | Index filter for channel machine data | | | INTEGER | 0/0 |
| Emb | Emb: 0 | *** | *** | Power On | |

| **9956** | **MD_DRV_TEA_FILTER** | | | H05 | **REF.:** |
|---|---|---|---|---|---|
| - | Drive machine data display options | | | INTEGER | 0/0 |
| Emb | Emb: 8388609 | *** | *** | Power On | |

© Siemens AG 2004 All Rights Reserved

| **9956** | **MD_DRV_TEA_FILTER** | | | H05 | **REF.:** |
|---|---|---|---|---|---|
| - | Drive machine data display options | | | INTEGER | 0/0 |
| Emb | Emb: 8388609 | *** | *** | Power On | |

| **9957** | **MD_DRV_TEA_IDX_LIMIT** | | | H05 | **REF.:** |
|---|---|---|---|---|---|
| - | Index filter for drive machine data | | | INTEGER | 0/0 |
| Emb | Emb: 0 | *** | *** | Power On | |

| **9980** | **LANGUAGE_SETTINGS** | | | H05 | **REF.:** |
|---|---|---|---|---|---|
| - | Internal language settings | | | INTEGER | 0/0 |
| Emb | Emb: 513 | *** | *** | Power On | |

| **9990** | **SW_OPTIONS** | | | H05 | **REF.:** FBSP, FBT |
|---|---|---|---|---|---|
| - | Enable MMC/HMI software options | | | INTEGER | 2/2 |
| Adv, Emb | Adv: , Emb: 0 | *** | *** | Power On | 5.3 |

| **9991** | **HMI_HELP_SYSTEMS** | | | H05 | **REF.:** FBSP, FBT |
|---|---|---|---|---|---|
| - | Enable MMC/HMI auxiliary systems<br>Bit 0 = 1 Help enabled for calculator (standard) | | | INTEGER | 2/2 |
| Emb | Emb: 1 | *** | *** | Power On | 6.1 |

| **9992** | **HMI_TESTAUTOMAT_OPTION** | | | H05 | **REF.:** FBT, FBSP, EMB |
|---|---|---|---|---|---|
| - | Options for autom. HMI test machine | | | INTEGER | 2/2 |
| Emb | Emb: 0 | *** | *** | Power On | 6.3 |

| **9993** | **HMI_WIZARD_OPTION** | | | H05 | **REF.:** FBT, FBSP, EMB |
|---|---|---|---|---|---|
| - | Options for wizard | | | INTEGER | 2/2 |
| Emb | Emb: 0 | *** | *** | Power On | 6.3 |

| **9999** | **TRACE** | | | H05 | **REF.:** - |
|---|---|---|---|---|---|
| - | Test flags for internal diagnosis | | | INTEGER | 2/2 |
| OP30, Adv, Emb | OP30: 0, Adv: 0, Emb: 0 | 0 | 0xFFFF | Power On | - |

© Siemens AG 2004 All Rights Reserved

## 2.5 General machine data

The display of the machine data has been extended in SW Version 4 and higher. The options Display filters and Attributes have been newly introduced.

**Display filters**

The quantity of machine data displayed on the operator panel can be limited to the machine data of interest by means of the display filters. Machine data are displayed on the operator panel if at least one of the filters indicated in the respective machine data has been activated by the user or if the mode “All machine data“ has been set. The short descriptions of the filters indicated are used again in the operator interface for filter activation. They have the following meaning:

- N01 Configuration / scaling
- N02 Memory configuration
- N03 PLC machine data
- N04 Drive control
- N05 Status data / diagnosis
- N06 Monitoring / limitations
- N07 Auxiliary functions
- N08 Overrides / compensations
- N09 Technological functions
- N10 I/O configuration
- N11 Standard machine
- N12 NC-Language ISO-Dialect

**Attributes**

In some machine data, you will find short identifiers with the following meaning under attributes:

- NBUP No back-up: the data is not entered in data back-up
- ODLS Only download: the data can only be loaded from the file
- READ Read only: the data can only be read
- NDLD No download: the data cannot be loaded from the file
- SFCO Configuration safety integrated
- SCAL Scaling Alarm
- LINK Link description

© Siemens AG 2004 All Rights Reserved

- CTEQ Must be equal for all containers
- CTDE Container description

**Introduction** The display filters and attributes are displayed in the machine data table element, as shown in the following header.

**System** You will find the identifiers such as:
iajc with the meaning i axes and j channels for example

6a2c 6 axes, 2 channels.

**Note**

Machine data values which may differ according to the system used are listed in additional lines below the table header. In these cases, the fourth line is the standard assignment, the fifth line and any further lines contain differing values for the systems stated. The minus sign in a field means: The standard values stated in line 4 applies. The entry "-1" stated under protection means that there is no machine data for the system stated.

| **Number** | **MD identifier** | | | | Cross reference |
|---|---|---|---|---|---|
| Unit | Name | | | | Active |
| Display filters | | | | Attributes | D type |
| System | Dimension | Standard value | Minimum value | Maximum value | Protect. Level |

## 2.5.1 System settings

| **10000** | **AXCONF_MACHAX_NAME_TAB** | | | | K2 |
|---|---|---|---|---|---|
| - | Machine axis name | | | | POWER ON |
| N01, N11 | | | | - | STRING |
| - | 31 | "X1","Y1","Z1","A1","B1","C1","U1"... | - | - | 7/2 |
| 840d-2a2c | 2 | "X1","Y1" | - | - | -/- |
| 840d-4a1cg | 4 | "X1","Y1","Z1","A1" | - | - | -/- |
| 840d-6a2c | - | "X1","Y1","Z1","A1","B1","C1" | - | - | -/- |
| 840di-basic | 6 | - | - | - | -/- |
| 840di-universal | 10 | - | - | - | -/- |
| 840di-plus | 18 | - | - | - | -/- |

© Siemens AG 2004 All Rights Reserved

| **10002** | **AXCONF_LOGIC_MACHAX_TAB** | | | | B3 |
|---|---|---|---|---|---|
| - | Logical NCK machine axis image | | | | POWER ON |
| N01 | | | | - | STRING |
| - | 31 | "AX1","AX2","AX3","AX4","AX5","AX6"... | - | - | 3/2 |
| 840d-2a2c | 2 | - | - | - | -/- |
| 840d-4a1cg | 4 | - | - | - | -/- |
| 840di-basic | 6 | - | - | - | -/- |
| 840di-universal | 10 | - | - | - | -/- |
| 840di-plus | 18 | - | - | - | -/- |

| **10008** | **MAXNUM_PLC_CTRL_AXES** | | | | P2 |
|---|---|---|---|---|---|
| - | Max. no. of PLC-controlled axes | | | | POWER ON |
| N01, N09 | | | | - | BYTE |
| - | - | 0 | 0 | 4 | 7/2 |

| **10010** | **ASSIGN_CHAN_TO_MODE_GROUP** | | | | K1,IAD |
|---|---|---|---|---|---|
| - | Channel valid in mode group | | | | POWER ON |
| N01, N02, N11 | | | | - | DWORD |
| - | 10 | 1,0,0,0,0,0,0,0,0,0,0,0,0,0,0,0 | 0 | 10 | 7/2 |
| 840d-2a2c | 2 | - | - | - | -/- |
| 840d-4a1cg | 1 | - | - | - | -/- |
| 840di-basic | 2 | - | - | 2 | -/- |
| 840di-universal | 2 | - | - | 2 | -/- |
| 840di-plus | 6 | - | - | 6 | -/- |

| **10050** | **SYSCLOCK_CYCLE_TIME** | | | | G3 |
|---|---|---|---|---|---|
| s | System clock cycle | | | | POWER ON |
| N01, N05, N11 | | | | SFCO | DOUBLE |
| - | - | 0.004 | 0.000125 | 0.031 | 7/2 |
| 810d | - | 0.0025 | 0.001 | 0.016 | -/- |
| 840di-basic | - | 0.002 | 0.001 | 0.008 | -/- |
| 840di-universal | - | 0.002 | 0.001 | 0.008 | -/- |
| 840di-plus | - | 0.002 | 0.001 | 0.008 | -/- |

© Siemens AG 2004 All Rights Reserved

| | | | | | |
|---|---|---|---|---|---|
| **10059** | **PROFIBUS_ALARM_MARKER** | | | | G3 |
| - | Profibus alarm flag (internal only) | | | | POWER ON |
| N05 | | | | NBUP, NDLD | BYTE |
| - | - | 0 | - | - | 0/0 |

| | | | | | |
|---|---|---|---|---|---|
| **10060** | **POSCTRL_SYSCLOCK_TIME_RATIO** | | | | G3 |
| - | Factor for position control cycle | | | | POWER ON |
| N01, N05 | | | | SFCO | DWORD |
| - | - | 1 | 1 | 31 | 7/2 |
| 840di-basic | - | - | - | - | -1/- |
| 840di-universal | - | - | - | - | -1/- |
| 840di-plus | - | - | - | - | -1/- |

| | | | | | |
|---|---|---|---|---|---|
| **10061** | **POSCTRL_CYCLE_TIME** | | | | G3 |
| - | Position control cycle | | | | POWER ON |
| N01, N05 | | | | READ | DOUBLE |
| - | - | 0.0 | - | - | 7/0 |

| | | | | | |
|---|---|---|---|---|---|
| **10062** | **POSCTRL_CYCLE_DELAY** | | | | G3 |
| s | Position control cycle offset | | | | POWER ON |
| N01, N05 | | | | - | DOUBLE |
| - | - | 0.003 | 0.000 | 0.008 | 7/2 |
| 810d | - | 0.0 | - | - | 0/0 |
| 840di-basic | - | 0.001550 | - | - | -/- |
| 840di-universal | - | 0.001550 | - | - | -/- |
| 840di-plus | - | 0.001550 | - | - | -/- |

| | | | | | |
|---|---|---|---|---|---|
| **10065** | **POSCTRL_DESVAL_DELAY** | | | | B3 |
| s | Position setpoint delay | | | | POWER ON |
| N01 | | | | - | DOUBLE |
| - | - | 0.0 | -0.1 | 0.1 | 7/2 |

© Siemens AG 2004 All Rights Reserved

| 10070 | IPO_SYSCLOCK_TIME_RATIO | | | | G3 |
|---|---|---|---|---|---|
| - | Factor for interpolation cycle | | | | POWER ON |
| N01, N05, N11 | | | | SFCO | DWORD |
| - | - | 4 | 1 | 100 | 7/2 |
| 840d-2a2c | - | 3 | - | - | -/- |
| 840d-4a1cg | - | 3 | - | - | -/- |
| 840d-6a2c | - | 3 | - | - | -/- |
| 840d-12a2c | - | 3 | - | - | -/- |

| 10071 | IPO_CYCLE_TIME | | | | G3 |
|---|---|---|---|---|---|
| - | Interpolator cycle | | | | POWER ON |
| N01, N05, N11 | | | | READ | DOUBLE |
| - | - | 0.0 | - | - | 7/0 |

| 10072 | COM_IPO_TIME_RATIO | | | | - |
|---|---|---|---|---|---|
| - | Division ratio between interpolation and communications task | | | | POWER ON |
| N01, N05 | | | | - | DOUBLE |
| - | - | 1.0 | 0.0 | 100.0 | 7/2 |
| 810d | - | 0.5 | - | - | -/- |

| 10074 | PLC_IPO_TIME_RATIO | | | | - |
|---|---|---|---|---|---|
| - | Factor of PLC task for the main run. | | | | POWER ON |
| N01, N05 | | | | - | DWORD |
| - | - | 1 | 1 | 50 | 0/0 |

| 10075 | PLC_CYCLE_TIME | | | | - |
|---|---|---|---|---|---|
| - | PLC cycle time | | | | POWER ON |
| N01, N05 | | | | READ | DOUBLE |
| - | - | 0.0 | - | - | 1/1 |

| 10080 | SYSCLOCK_SAMPL_TIME_RATIO | | | | G3 |
|---|---|---|---|---|---|
| - | Division factor of pos. control cycle for actual val. sensing | | | | POWER ON |
| EXP, N01 | | | | - | DWORD |
| - | - | 5 | 1 | 31 | 0/0 |
| 810d | - | 4 | - | - | -/- |
| 840d-2a2c | - | 4 | - | - | -/- |
| 840d-4a1cg | - | 4 | - | - | -/- |
| 840d-6a2c | - | 4 | - | - | -/- |
| 840d-12a2c | - | 4 | - | - | -/- |

© Siemens AG 2004 All Rights Reserved

| 10082 | CTRLOUT_LEAD_TIME | | | | K3 |
|---|---|---|---|---|---|
| % | Shift of setpoint transfer time | | | | POWER ON |
| EXP, N01 | | | | - | DOUBLE |
| - | - | 0.0 | 0.0 | 100.0 | 7/2 |

| 10083 | CTRLOUT_LEAD_TIME_MAX | | | | K3 |
|---|---|---|---|---|---|
| % | Max. settable offset of setpoint transfer time | | | | NEW CONF |
| EXP, N01 | | | | - | DOUBLE |
| - | - | 100.0 | 0.0 | 100.0 | 7/2 |

| 10088 | REBOOT_DELAY_TIME | | | | - |
|---|---|---|---|---|---|
| s | Reboot delay | | | | IMMEDIATELY |
| EXP | | | | - | DOUBLE |
| - | - | 0.2 | 0.0 | 1.0 | 2/2 |

| 10089 | SAFE_PULSE_DIS_TIME_BUSFAIL | | | | FBSI |
|---|---|---|---|---|---|
| s | Delay time pulse suppr. for bus failure | | | | POWER ON |
| N01, N06 | | | | - | DOUBLE |
| - | - | 0.0 | 0 | 0.8 | 7/2 |
| 840di-basic | - | - | - | - | -1/- |
| 840di-universal | - | - | - | - | -1/- |
| 840di-plus | - | - | - | - | -1/- |

| 10090 | SAFETY_SYSCLOCK_TIME_RATIO | | | | FBSI |
|---|---|---|---|---|---|
| - | Factor for monitoring cycle | | | | POWER ON |
| N01, N06 | | | | SFCO | DWORD |
| - | - | 3 | 1 | 50 | 7/1 |
| 840di-basic | - | - | - | - | -1/- |
| 840di-universal | - | - | - | - | -1/- |
| 840di-plus | - | - | - | - | -1/- |

| 10091 | INFO_SAFETY_CYCLE_TIME | | | | FBSI |
|---|---|---|---|---|---|
| s | Display of monitoring cycle time | | | | POWER ON |
| N01, N06, N05 | | | | READ | DOUBLE |
| - | - | 0.0 | - | - | 7/0 |
| 840di-basic | - | - | - | - | -1/- |
| 840di-universal | - | - | - | - | -1/- |
| 840di-plus | - | - | - | - | -1/- |

© Siemens AG 2004 All Rights Reserved

| 10092 | INFO_CROSSCHECK_CYCLE_TIME | | | | FBSI |
|---|---|---|---|---|---|
| s | Display cycle time for cross-check | | | | POWER ON |
| N01, N06, N05 | | | | READ | DOUBLE |
| - | - | 0.0 | - | - | 7/0 |
| 840di-basic | - | - | - | - | -1/- |
| 840di-universal | - | - | - | - | -1/- |
| 840di-plus | - | - | - | - | -1/- |

| 10093 | INFO_NUM_SAFE_FILE_ACCESS | | | | FBSI |
|---|---|---|---|---|---|
| - | Number of SPL file accesses | | | | POWER ON |
| EXP, N06, N05 | | | | READ | DWORD |
| - | - | 0 | - | - | 0/0 |
| 840di-basic | - | - | - | - | -1/- |
| 840di-universal | - | - | - | - | -1/- |
| 840di-plus | - | - | - | - | -1/- |

| 10094 | SAFE_ALARM_SUPPRESS_LEVEL | | | | FBSI |
|---|---|---|---|---|---|
| - | Alarm suppress level | | | | POWER ON |
| EXP, N06, N05 | | | | - | BYTE |
| - | - | 2 | 0 | 13 | 7/2 |
| 840di-basic | - | - | - | - | -1/- |
| 840di-universal | - | - | - | - | -1/- |
| 840di-plus | - | - | - | - | -1/- |

| 10095 | SAFE_MODE_MASK | | | | FBSI |
|---|---|---|---|---|---|
| - | 'Safety Integrated' operating modes | | | | POWER ON |
| EXP, N05 | | | | - | DWORD |
| - | - | 0 | 0 | 0x0001 | 7/2 |
| 840di-basic | - | - | - | - | -1/- |
| 840di-universal | - | - | - | - | -1/- |
| 840di-plus | - | - | - | - | -1/- |

| 10096 | SAFE_DIAGNOSIS_MASK | | | | FBSI |
|---|---|---|---|---|---|
| - | 'Safety Integrated' diagnosis functions | | | | NEW CONF |
| EXP, N06, N05 | | | | - | DWORD |
| - | - | 1 | 0 | 0x0001 | 7/2 |
| 840di-basic | - | - | - | - | -1/- |
| 840di-universal | - | - | - | - | -1/- |
| 840di-plus | - | - | - | - | -1/- |

© Siemens AG 2004 All Rights Reserved

| 10097 | SAFE_SPL_STOP_MODE | | | | FBSI |
|---|---|---|---|---|---|
| - | Stop reaction for SPL errors | | | | POWER ON |
| N01, N06 | | | | - | BYTE |
| - | - | 3 | 3 | 4 | 7/2 |
| 840di-basic | - | - | - | - | -1/- |
| 840di-universal | - | - | - | - | -1/- |
| 840di-plus | - | - | - | - | -1/- |

| 10098 | PROFISAFE_IPO_TIME_RATIO | | | | FBSI |
|---|---|---|---|---|---|
| - | Factor for PROFIsafe communication | | | | POWER ON |
| N01, N06 | | | | SFCO | DWORD |
| - | - | 1 | 1 | 25 | 7/1 |
| 840di-basic | - | - | - | - | -1/- |
| 840di-universal | - | - | - | - | -1/- |
| 840di-plus | - | - | - | - | -1/- |

| 10099 | INFO_PROFISAFE_CYCLE_TIME | | | | FBSI |
|---|---|---|---|---|---|
| s | PROFIsafe communication cycle time | | | | POWER ON |
| N01, N06, N05 | | | | READ | DOUBLE |
| - | - | 0.0 | - | - | 7/0 |
| 840di-basic | - | - | - | - | -1/- |
| 840di-universal | - | - | - | - | -1/- |
| 840di-plus | - | - | - | - | -1/- |

| 10100 | PLC_CYCLIC_TIMEOUT | | | | P3 |
|---|---|---|---|---|---|
| s | Maximum PLC cycle time | | | | POWER ON |
| EXP, N01, N06 | | | | - | DOUBLE |
| - | - | 0.1 | - | - | 7/2 |

| 10110 | PLC_CYCLE_TIME_AVERAGE | | | | B1 |
|---|---|---|---|---|---|
| s | Average PLC acknowledgement time | | | | POWER ON |
| N01, N07 | | | | - | DOUBLE |
| - | - | 0.05 | - | - | 7/2 |

| 10120 | PLC_RUNNINGUP_TIMEOUT | | | | H2 |
|---|---|---|---|---|---|
| s | Monitoring time for PLC power up | | | | POWER ON |
| EXP, N01, N06 | | | | - | DOUBLE |
| - | - | 50.0 | - | - | 7/2 |

© Siemens AG 2004 All Rights Reserved

| 10130 | TIME_LIMIT_NETTO_COM_TASK | | | | OEM |
|---|---|---|---|---|---|
| s | Runtime of communication to MMC | | | | POWER ON |
| EXP, N01 | | | | - | DOUBLE |
| - | - | 0.005 | .001 | 0.100 | 7/1 |

| 10131 | SUPPRESS_SCREEN_REFRESH | | | | A2 |
|---|---|---|---|---|---|
| - | Screen refresh response under overload | | | | POWER ON |
| EXP | | | | - | BYTE |
| - | - | 0 | 0 | 2 | 7/2 |

| 10132 | MMC_CMD_TIMEOUT | | | | PA,M4 |
|---|---|---|---|---|---|
| s | Monitoring time for MMC command in the part program | | | | POWER ON |
| EXP, N01, N06 | | | | - | DOUBLE |
| - | - | 3.0 | 0.0 | 100.0 | 7/2 |

| 10134 | MM_NUM_MMC_UNITS | | | | B3 |
|---|---|---|---|---|---|
| - | Possible number of simultaneous MMC communication partners | | | | POWER ON |
| EXP, N01, N02 | | | | - | DWORD |
| - | - | 6 | 1 | 10 | 2/2 |

| 10136 | DISPLAY_MODE_POSITION | | | | - |
|---|---|---|---|---|---|
| - | Display mode for actual position in the WCS | | | | RESET |
| N01 | | | | - | DWORD |
| - | - | 0 | 0 | 1 | 7/1 |

| 10140 | TIME_LIMIT_NETTO_DRIVE_TASK | | | | ECO |
|---|---|---|---|---|---|
| s | Runtime limit of drive communications sub-task | | | | POWER ON |
| EXP, N01 | | | | - | DOUBLE |
| - | - | 0.02 | .001 | .5 | 7/1 |

| 10150 | PREP_DRIVE_TASK_CYCLE_RATIO | | | | ECO |
|---|---|---|---|---|---|
| - | Factor for communication with drive | | | | POWER ON |
| EXP, N01 | | | | - | DWORD |
| - | - | 2 | 1 | 50 | 7/1 |

| 10160 | PREP_COM_TASK_CYCLE_RATIO | | | | ECO |
|---|---|---|---|---|---|
| - | Factor for communication with MMC | | | | POWER ON |
| EXP, N01 | | | | - | DWORD |
| - | - | 3 | 1 | 50 | 7/1 |

© Siemens AG 2004 All Rights Reserved

| | | | | | |
|---|---|---|---|---|---|
| **10161** | **COM_CONFIGURATION** | | | | - |
| - | Configuration of communication | | | | POWER ON |
| EXP, N01 | | | | - | DWORD |
| - | 8 | 5, 5,18, 1,16, 8,18,18 | - | - | 0/0 |

| | | | | | |
|---|---|---|---|---|---|
| **10185** | **NCK_PCOS_TIME_RATIO** | | | | - |
| - | Processing time share NCK | | | | POWER ON |
| EXP, N01 | | | | - | DWORD |
| - | - | 100 | 0 | 100 | 0/0 |
| 840di-basic | - | 65 | 10 | 90 | 7/2 |
| 840di-universal | - | 65 | 10 | 90 | 7/2 |
| 840di-plus | - | 65 | 10 | 90 | 7/2 |

| | | | | | |
|---|---|---|---|---|---|
| **10190** | **TOOL_CHANGE_TIME** | | | | BA |
| - | Tool changing time for simulation | | | | POWER ON |
| N01 | | | | - | DOUBLE |
| - | - | 0. | - | - | 7/2 |

| | | | | | |
|---|---|---|---|---|---|
| **10192** | **GEAR_CHANGE_WAIT_TIME** | | | | S1 |
| s | Gear stage change waiting time | | | | POWER ON |
| N01 | | | | - | DOUBLE |
| - | - | 10.0 | 0.0 | 1.0e5 | 7/2 |

| | | | | | |
|---|---|---|---|---|---|
| **10200** | **INT_INCR_PER_MM** | | | | G2 |
| - | Calculation resolution for linear positions | | | | POWER ON |
| N01 | | | | - | DOUBLE |
| - | - | 1000. | 1.0 | 1.0e9 | 7/2 |

| | | | | | |
|---|---|---|---|---|---|
| **10210** | **INT_INCR_PER_DEG** | | | | G2 |
| - | Calculation resolution for angular positions | | | | POWER ON |
| N01 | | | | - | DOUBLE |
| - | - | 1000.0 | 1.0 | 1.0e9 | 7/2 |

| | | | | | |
|---|---|---|---|---|---|
| **10220** | **SCALING_USER_DEF_MASK** | | | | G2 |
| - | Activation of scaling factors | | | | POWER ON |
| EXP, N01 | | | | SCAL | DWORD |
| - | - | 0x200 | 0 | 0x3FFF | 7/2 |

© Siemens AG 2004 All Rights Reserved

| 10230 | SCALING_FACTORS_USER_DEF | | | | G2 |
|---|---|---|---|---|---|
| - | Scaling factors of physical variables | | | | POWER ON |
| EXP, N01 | | | | SCAL | DOUBLE |
| - | 15 | 1.0,1.0,1.0,1.0,1.0,1.0, 1.0,1.0,1.0... | 1e-9 | - | 7/2 |

| 10240 | SCALING_SYSTEM_IS_METRIC | | | | G2 |
|---|---|---|---|---|---|
| - | Basic system metric | | | | POWER ON |
| N01 | | | | SCAL | BOOLEAN |
| - | - | TRUE | - | - | 7/2 |

| 10250 | SCALING_VALUE_INCH | | | | G2 |
|---|---|---|---|---|---|
| - | Conversion factor for conversion to INCH system | | | | POWER ON |
| EXP | | | | SCAL | DOUBLE |
| - | - | 25.4 | 1e-9 | - | 0/0 |

| 10260 | CONVERT_SCALING_SYSTEM | | | | A3,G2 |
|---|---|---|---|---|---|
| - | Enable basic system conversion | | | | POWER ON |
| EXP | | | | LINK | BOOLEAN |
| - | - | FALSE | - | - | 1/1 |

| 10270 | POS_TAB_SCALING_SYSTEM | | | | T1 |
|---|---|---|---|---|---|
| - | System of units of position tables | | | | RESET |
| N01, N09 | | | | - | BYTE |
| - | - | 0 | 0 | 1 | 7/2 |

| 10280 | PROG_FUNCTION_MASK | | | | K1 |
|---|---|---|---|---|---|
| - | Comparing (> and < ) compatible with SW6.3 | | | | POWER ON |
| EXP, N01 | | | | - | DWORD |
| - | - | 0x0 | 0 | 0x1 | 7/2 |

| 10284 | DISPLAY_FUNCTION_MASK | | | | - |
|---|---|---|---|---|---|
| - | BTSS-variable lastBlockNoStr active | | | | POWER ON |
| EXP, N01 | | | | - | DWORD |
| - | - | 0x0 | - | - | 7/2 |

| 10290 | CC_TDA_PARAM_UNIT | | | | G2 |
|---|---|---|---|---|---|
| - | Physical units of tool data for CC | | | | POWER ON |
| N09 | | | | - | DWORD |
| - | 10 | 0,0,0,0,0,0,0,0,0,0 | 0 | 16 | 2/2 |

© Siemens AG 2004 All Rights Reserved

| | | | | | |
|---|---|---|---|---|---|
| **10291** | **CCS_TDA_PARAM_UNIT** | | | | - |
| - | Units of SIEMENS-OEM tool data | | | | POWER ON |
| N09 | | | | - | DWORD |
| - | 10 | 0,0,0,0,0,0,0,0,0,0 | 0 | 16 | 2/2 |

| | | | | | |
|---|---|---|---|---|---|
| **10292** | **CC_TOA_PARAM_UNIT** | | | | G2 |
| - | Physical units of cutting edge data for CC | | | | POWER ON |
| N09 | | | | - | DWORD |
| - | 10 | 0,0,0,0,0,0,0,0,0,0 | 0 | 16 | 2/2 |

| | | | | | |
|---|---|---|---|---|---|
| **10293** | **CCS_TOA_PARAM_UNIT** | | | | - |
| - | Units of SIEMENS-OEM cutt. edge data | | | | POWER ON |
| N09 | | | | - | DWORD |
| - | 10 | 0,0,0,0,0,0,0,0,0,0 | 0 | 16 | 2/2 |

| | | | | | |
|---|---|---|---|---|---|
| **10300** | **FASTIO_ANA_NUM_INPUTS** | | | | A4 |
| - | Number of active analog NCK inputs | | | | POWER ON |
| N10 | | | | - | BYTE |
| - | - | 0 | 0 | 8 | 7/2 |

| | | | | | |
|---|---|---|---|---|---|
| **10310** | **FASTIO_ANA_NUM_OUTPUTS** | | | | A4 |
| - | Number of active analog NCK outputs | | | | POWER ON |
| N10 | | | | - | BYTE |
| - | - | 0 | 0 | 8 | 7/2 |

| | | | | | |
|---|---|---|---|---|---|
| **10320** | **FASTIO_ANA_INPUT_WEIGHT** | | | | A4 |
| - | Weighting factor for analog NCK inputs | | | | POWER ON |
| N10 | | | | - | DWORD |
| - | 8 | 10000,10000,10000,10000,10000,10000... | 1 | 10000000 | 7/2 |

| | | | | | |
|---|---|---|---|---|---|
| **10330** | **FASTIO_ANA_OUTPUT_WEIGHT** | | | | A4 |
| - | Weighting factor for analog NCK outputs | | | | POWER ON |
| N10 | | | | - | DWORD |
| - | 8 | 10000,10000,10000,10000,10000,10000... | 1 | 10000000 | 7/2 |

| | | | | | |
|---|---|---|---|---|---|
| **10350** | **FASTIO_DIG_NUM_INPUTS** | | | | A4 |
| - | Number of active digital NCK input bytes | | | | POWER ON |
| N10 | | | | - | BYTE |
| - | - | 1 | 0 | 5 | 7/2 |

© Siemens AG 2004 All Rights Reserved

| 10360 | FASTIO_DIG_NUM_OUTPUTS | | | | A4 |
|---|---|---|---|---|---|
| - | Number of active digital NCK output bytes | | | | POWER ON |
| N10 | | | | - | BYTE |
| - | - | 0 | 0 | 5 | 7/2 |

| 10361 | FASTIO_DIG_SHORT_CIRCUIT | | | | A2 |
|---|---|---|---|---|---|
| - | Short circuit of digital inputs and outputs | | | | POWER ON |
| N10 | | | | - | DWORD |
| - | 10 | 0,0,0,0,0,0,0,0,0,0 | - | - | 7/2 |

| 10362 | HW_ASSIGN_ANA_FASTIN | | | | A4 |
|---|---|---|---|---|---|
| - | Hardware assignment of external analog NCK inputs | | | | POWER ON |
| N10 | | | | - | DWORD |
| - | 8 | 0x01000000,0x01000000,0x01000000... | 0x01000000 | 0x060003FF | 7/2 |

| 10364 | HW_ASSIGN_ANA_FASTOUT | | | | A4 |
|---|---|---|---|---|---|
| - | Hardware assignment of external analog NCK outputs | | | | POWER ON |
| N10 | | | | - | DWORD |
| - | 8 | 0x01000000,0x01000000,0x01000000... | 0x01000000 | 0x060003FF | 7/2 |

| 10366 | HW_ASSIGN_DIG_FASTIN | | | | A4 |
|---|---|---|---|---|---|
| - | Hardware assignment of external digital NCK inputs | | | | POWER ON |
| N10 | | | | - | DWORD |
| - | 10 | 0x01000000,0x01000000,0x01000000... | 0x01000000 | 0x060003FF | 7/2 |

| 10368 | HW_ASSIGN_DIG_FASTOUT | | | | A4 |
|---|---|---|---|---|---|
| - | Hardware assignment of external digital NCK outputs | | | | POWER ON |
| N10 | | | | - | DWORD |
| - | 4 | 0x01000000,0x01000000,0x01000000... | 0x01000000 | 0x060003FF | 7/2 |

| 10380 | HW_UPDATE_RATE_FASTIO | | | | A4 |
|---|---|---|---|---|---|
| - | Updating rate of clocked external NCK I/Os | | | | POWER ON |
| EXP, N10 | | | | - | BYTE |
| - | 5 | 2,2,2,2,3 | 2 | 3 | 7/2 |

© Siemens AG 2004 All Rights Reserved

| | | | | | |
|---|---|---|---|---|---|
| **10382** | **HW_LEAD_TIME_FASTIO** | | | | A4 |
| - | Lead time of clocked external NCK I/Os | | | | POWER ON |
| EXP, N10 | | | | - | DWORD |
| - | 5 | 100,100,100,100,100 | - | - | 7/2 |

| | | | | | |
|---|---|---|---|---|---|
| **10384** | **HW_CLOCKED_MODULE_MASK** | | | | A4 |
| - | Synchronous processing of external NCK I/Os | | | | POWER ON |
| N10 | | | | - | BYTE |
| - | 5 | 0,0,0,0,0 | - | - | 7/2 |

| | | | | | |
|---|---|---|---|---|---|
| **10385** | **PROFISAFE_MASTER_ADDRESS** | | | | FBSI |
| - | PROFIsafe-address master module | | | | POWER ON |
| N01, N06 | | | | - | DWORD |
| - | - | 0 | 0 | 0x0500FA7D | 7/2 |
| 840di-basic | - | - | - | - | -1/- |
| 840di-universal | - | - | - | - | -1/- |
| 840di-plus | - | - | - | - | -1/- |

| | | | | | |
|---|---|---|---|---|---|
| **10386** | **PROFISAFE_IN_ADDRESS** | | | | FBSI |
| - | PROFIsafe-address input module | | | | POWER ON |
| N01, N06 | | | | - | DWORD |
| - | 16 | 0,0,0,0,0,0,0,0,0,0,0,0,0,0,0,0 | 0 | 0x050FFFFF | 7/2 |
| 840di-basic | - | - | - | - | -1/- |
| 840di-universal | - | - | - | - | -1/- |
| 840di-plus | - | - | - | - | -1/- |

| | | | | | |
|---|---|---|---|---|---|
| **10387** | **PROFISAFE_OUT_ADDRESS** | | | | FBSI |
| - | PROFIsafe-address output module | | | | POWER ON |
| N01, N06 | | | | - | DWORD |
| - | 16 | 0,0,0,0,0,0,0,0,0,0,0,0,0,0,0,0 | 0 | 0x050FFFFF | 7/2 |
| 840di-basic | - | - | - | - | -1/- |
| 840di-universal | - | - | - | - | -1/- |
| 840di-plus | - | - | - | - | -1/- |

© Siemens AG 2004 All Rights Reserved

| 10388 | PROFISAFE_IN_ASSIGN | | | | FBSI |
|---|---|---|---|---|---|
| - | Input.assignment $A_INSE to PROFIsafe module | | | | POWER ON |
| N01, N06 | | | | - | DWORD |
| - | 16 | 0,0,0,0,0,0,0,0,0,0,0,0,0,0,0,0 | 0 | 64064 | 7/2 |
| 840di-basic | - | - | - | - | -1/- |
| 840di-universal | - | - | - | - | -1/- |
| 840di-plus | - | - | - | - | -1/- |

| 10389 | PROFISAFE_OUT_ASSIGN | | | | FBSI |
|---|---|---|---|---|---|
| - | Outp.assignment $A_OUTSE to PROFIsafe module | | | | POWER ON |
| N01, N06 | | | | - | DWORD |
| - | 16 | 0,0,0,0,0,0,0,0,0,0,0,0,0,0,0,0 | 0 | 64064 | 7/2 |
| 840di-basic | - | - | - | - | -1/- |
| 840di-universal | - | - | - | - | -1/- |
| 840di-plus | - | - | - | - | -1/- |

| 10390 | SAFE_IN_HW_ASSIGN | | | | FBSI |
|---|---|---|---|---|---|
| - | Input assignment ext. interface SPL | | | | POWER ON |
| N01, N06 | | | | - | DWORD |
| - | 8 | 0,0,0,0,0,0,0,0 | - | - | 7/2 |
| 840di-basic | - | - | - | - | -1/- |
| 840di-universal | - | - | - | - | -1/- |
| 840di-plus | - | - | - | - | -1/- |

| 10392 | SAFE_OUT_HW_ASSIGN | | | | FBSI |
|---|---|---|---|---|---|
| - | Output assignment ext. interface SPL | | | | POWER ON |
| N01, N06 | | | | - | DWORD |
| - | 8 | 0,0,0,0,0,0,0,0 | - | - | 7/2 |
| 840di-basic | - | - | - | - | -1/- |
| 840di-universal | - | - | - | - | -1/- |
| 840di-plus | - | - | - | - | -1/- |

| 10394 | PLCIO_NUM_BYTES_IN | | | | A2 |
|---|---|---|---|---|---|
| - | Number of directly readable input bytes of the PLC I/Os | | | | POWER ON |
| N10 | | | | - | BYTE |
| - | - | 0 | 0 | 16 | 7/2 |

© Siemens AG 2004 All Rights Reserved

| 10395 | PLCIO_LOGIC_ADDRESS_IN | | | | A2 |
|---|---|---|---|---|---|
| - | Start addr. of the directly readable input bytes of the PLC I/Os | | | | POWER ON |
| N10 | | | | - | DWORD |
| - | - | 0 | - | - | 7/2 |

| 10396 | PLCIO_NUM_BYTES_OUT | | | | A2 |
|---|---|---|---|---|---|
| - | Number of directly writable output bytes of the PLC I/Os | | | | POWER ON |
| N10 | | | | - | BYTE |
| - | - | 0 | 0 | 16 | 7/2 |

| 10397 | PLCIO_LOGIC_ADDRESS_OUT | | | | A2 |
|---|---|---|---|---|---|
| - | Start addr. of the directly writable output bytes of PLC I/O | | | | POWER ON |
| N10 | | | | - | DWORD |
| - | - | 0 | - | - | 7/2 |

| 10398 | PLCIO_IN_UPDATE_TIME | | | | A4 |
|---|---|---|---|---|---|
| s | Update time for PLCIO input cycle | | | | POWER ON |
| N10 | | | | - | DOUBLE |
| - | - | 0.0 | 0 | 10000 | 7/2 |

| 10399 | PLCIO_TYPE_REPRESENTATION | | | | A4 |
|---|---|---|---|---|---|
| - | Little/Big Endian for PLCIO | | | | POWER ON |
| N10 | | | | - | BYTE |
| - | - | 0 | 0 | 1 | 7/2 |

| 10400 | CC_VDI_IN_DATA | | | | OEM |
|---|---|---|---|---|---|
| - | Number of interface bytes to compile cycles | | | | POWER ON |
| EXP, N02 | | | | - | DWORD |
| - | - | 0 | 0 | 1024 | 7/1 |

| 10410 | CC_VDI_OUT_DATA | | | | OEM |
|---|---|---|---|---|---|
| - | Number of interface bytes from compile cycles | | | | POWER ON |
| EXP, N02 | | | | - | DWORD |
| - | - | 0 | 0 | 1024 | 7/1 |

| 10420 | CC_ASSIGN_FASTOUT_MASK | | | | OEM |
|---|---|---|---|---|---|
| - | Reservation of external outputs for CC application | | | | POWER ON |
| EXP, N10 | | | | - | DWORD |
| - | - | 0 | - | - | 7/2 |

© Siemens AG 2004 All Rights Reserved

| | | | | | |
|---|---|---|---|---|---|
| **10430** | **CC_HW_DEBUG_MASK** | | | | OEM |
| - | Hardware debug screenform for compile cycles | | | | POWER ON |
| EXP | | | | NBUP, NDLD | DWORD |
| - | - | 0 | - | - | 7/1 |

| | | | | | |
|---|---|---|---|---|---|
| **10450** | **SW_CAM_ASSIGN_TAB** | | | | N3 |
| - | Assignment software cams to machine axes | | | | POWER ON |
| N09 | | | | - | BYTE |
| - | 32 | 0,0,0,0,0,0,0,0,0,0,0,0,<br>0,0,0,0,0,0,0,0,0,0,0,0,<br>0,0... | 0 | 31 | 7/2 |

| | | | | | |
|---|---|---|---|---|---|
| **10460** | **SW_CAM_MINUS_LEAD_TIME** | | | | N3 |
| s | Lead or delay time at minus cams 1-16 | | | | POWER ON |
| N09 | | | | - | DOUBLE |
| - | 32 | 0.0,0.0,0.0,0.0,0.0,0.0,<br>0.0,0.0,0.0... | - | - | 7/2 |

| | | | | | |
|---|---|---|---|---|---|
| **10461** | **SW_CAM_PLUS_LEAD_TIME** | | | | N3 |
| s | Lead or delay time at plus cams 1-16 | | | | POWER ON |
| N09 | | | | - | DOUBLE |
| - | 32 | 0.0,0.0,0.0,0.0,0.0,0.0,<br>0.0,0.0,0.0... | - | - | 7/2 |

| | | | | | |
|---|---|---|---|---|---|
| **10470** | **SW_CAM_ASSIGN_FASTOUT_1** | | | | N3 |
| - | Hardware assignment for output of cams 1-8 to NCK I/Os | | | | POWER ON |
| N09 | | | | - | DWORD |
| - | - | 0 | - | - | 7/2 |

| | | | | | |
|---|---|---|---|---|---|
| **10471** | **SW_CAM_ASSIGN_FASTOUT_2** | | | | N3 |
| - | Hardware assignment for the output of cams 9-16 to NCK I/Os | | | | POWER ON |
| N09 | | | | - | DWORD |
| - | - | 0 | - | - | 7/2 |

| | | | | | |
|---|---|---|---|---|---|
| **10472** | **SW_CAM_ASSIGN_FASTOUT_3** | | | | N3 |
| - | Configuration cams 17 - 24 to I/Os | | | | POWER ON |
| N09 | | | | - | DWORD |
| - | - | 0 | - | - | 7/2 |

© Siemens AG 2004 All Rights Reserved

| | | | | | |
|---|---|---|---|---|---|
| **10473** | **SW_CAM_ASSIGN_FASTOUT_4** | | | | N3 |
| - | Configuration cams 25 - 32 to I/Os | | | | POWER ON |
| N09 | | | | - | DWORD |
| - | - | 0 | - | - | 7/2 |

| | | | | | |
|---|---|---|---|---|---|
| **10480** | **SW_CAM_TIMER_FASTOUT_MASK** | | | | N3 |
| - | Screenform for output of cam signals via timer interr. to NCU | | | | POWER ON |
| N09 | | | | - | DWORD |
| - | - | 0 | - | - | 7/2 |

| | | | | | |
|---|---|---|---|---|---|
| **10485** | **SW_CAM_MODE** | | | | N3 |
| - | Behavior of SW cams | | | | POWER ON |
| N09 | | | | - | DWORD |
| - | - | 0 | - | - | 7/2 |

| | | | | | |
|---|---|---|---|---|---|
| **10530** | **COMPAR_ASSIGN_ANA_INPUT_1** | | | | A4 |
| - | Hardware assignment of analog inputs for comparator byte 1 | | | | POWER ON |
| N10 | | | | - | BYTE |
| - | 8 | 0,0,0,0,0,0,0,0 | - | - | 7/2 |

| | | | | | |
|---|---|---|---|---|---|
| **10531** | **COMPAR_ASSIGN_ANA_INPUT_2** | | | | A4 |
| - | Hardware assignment of analog inputs for comparator byte 2 | | | | POWER ON |
| N10 | | | | - | BYTE |
| - | 8 | 0,0,0,0,0,0,0,0 | - | - | 7/2 |

| | | | | | |
|---|---|---|---|---|---|
| **10540** | **COMPAR_TYPE_1** | | | | A4 |
| - | Parameterization for comparator byte 1 | | | | POWER ON |
| N10 | | | | - | DWORD |
| - | - | 0 | - | - | 7/2 |

| | | | | | |
|---|---|---|---|---|---|
| **10541** | **COMPAR_TYPE_2** | | | | A4 |
| - | Parameterization of comparator byte 2 | | | | POWER ON |
| N10 | | | | - | DWORD |
| - | - | 0 | - | - | 7/2 |

| | | | | | |
|---|---|---|---|---|---|
| **10600** | **FRAME_ANGLE_INPUT_MODE** | | | | K2 |
| - | Input type for rotation with FRAME | | | | POWER ON |
| EXP, N01, N09 | | | | - | BYTE |
| - | - | 1 | 1 | 2 | 7/2 |

© Siemens AG 2004 All Rights Reserved

| 10602 | FRAME_GEOAX_CHANGE_MODE | | | | K2 |
|---|---|---|---|---|---|
| - | Frames when changing geometry axes | | | | POWER ON |
| EXP, N01, N09 | | | | - | BYTE |
| - | - | 0 | 0 | 5 | 7/2 |

| 10604 | WALIM_GEOAX_CHANGE_MODE | | | | A3 |
|---|---|---|---|---|---|
| - | Working area limit. by changing GEO axes | | | | POWER ON |
| EXP, N01, N09 | | | | - | BYTE |
| - | - | 0 | 0 | 1 | 7/2 |

| 10610 | MIRROR_REF_AX | | | | K2 |
|---|---|---|---|---|---|
| - | Reference axis for FRAME elements | | | | POWER ON |
| EXP, N01, N09 | | | | - | BYTE |
| - | - | 0 | 0 | 3 | 7/2 |

| 10612 | MIRROR_TOGGLE | | | | K2 |
|---|---|---|---|---|---|
| - | Mirror toggle | | | | POWER ON |
| EXP, N01, N09 | | | | - | BYTE |
| - | - | 1 | 0 | 1 | 7/2 |

| 10613 | NCBFRAME_RESET_MASK | | | | K2 |
|---|---|---|---|---|---|
| - | Active NCU global base frames after reset | | | | RESET |
| EXP | | | | - | DWORD |
| - | - | 0xFFFF | 0 | 0xFFFF | 7/2 |

| 10615 | NCBFRAME_POWERON_MASK | | | | K2 |
|---|---|---|---|---|---|
| - | Reset global base frames after power on | | | | POWER ON |
| EXP, N12 | | | | - | DWORD |
| - | - | 0 | 0 | 0xFFFF | 7/2 |

| 10617 | FRAME_SAVE_MASK | | | | K1,PGA |
|---|---|---|---|---|---|
| - | Behaviour of frames in SAVE subroutine | | | | POWER ON |
| EXP | | | | - | DWORD |
| - | - | 0 | 0 | 0x3 | 7/2 |

| 10618 | PROTAREA_GEOAX_CHANGE_MODE | | | | A3 |
|---|---|---|---|---|---|
| - | Protection ranges on change of GEO axes | | | | POWER ON |
| EXP, N01, N09 | | | | - | BYTE |
| - | - | 0 | 0 | 3 | 7/2 |

© Siemens AG 2004 All Rights Reserved

| | | | | | |
|---|---|---|---|---|---|
| **10620** | **EULER_ANGLE_NAME_TAB** | | | | F2 |
| - | Name of Euler angle | | | | POWER ON |
| N01, N09 | | | | - | STRING |
| - | 3 | "A2","B2","C2" | - | - | 7/2 |

| | | | | | |
|---|---|---|---|---|---|
| **10630** | **NORMAL_VECTOR_NAME_TAB** | | | | F2 |
| - | Name of normal vectors | | | | POWER ON |
| N01, N09 | | | | - | STRING |
| - | 6 | "A4","B4","C4","A5","B5","C5" | - | - | 7/2 |

| | | | | | |
|---|---|---|---|---|---|
| **10640** | **DIR_VECTOR_NAME_TAB** | | | | F2 |
| - | Name of direction vectors | | | | POWER ON |
| N01, N09 | | | | - | STRING |
| - | 6 | "A3","B3","C3","AN3","BN3","CN3" | - | - | 7/2 |

| | | | | | |
|---|---|---|---|---|---|
| **10642** | **ROT_VECTOR_NAME_TAB** | | | | F2 |
| - | Name of rotation vectors | | | | POWER ON |
| N01, N09 | | | | - | STRING |
| - | 3 | "A6","B6","C6" | - | - | 7/2 |

| | | | | | |
|---|---|---|---|---|---|
| **10644** | **INTER_VECTOR_NAME_TAB** | | | | F2 |
| - | Name of intermediate vector components | | | | POWER ON |
| N01, N09 | | | | - | STRING |
| - | 3 | "A7","B7","C7" | - | - | 7/2 |

| | | | | | |
|---|---|---|---|---|---|
| **10646** | **ORIENTATION_NAME_TAB** | | | | F2 |
| - | IDs for programming a 2nd ori.path | | | | POWER ON |
| N01, N09 | | | | - | STRING |
| - | 3 | "XH","YH","ZH" | - | - | 7/2 |

| | | | | | |
|---|---|---|---|---|---|
| **10648** | **NUTATION_ANGLE_NAME** | | | | F2 |
| - | Name of aperture angle | | | | POWER ON |
| N01, N09 | | | | - | STRING |
| - | -1 | "NUT" | - | - | 7/2 |

| | | | | | |
|---|---|---|---|---|---|
| **10650** | **IPO_PARAM_NAME_TAB** | | | | K2 |
| - | Name of interpolation parameters | | | | POWER ON |
| EXP, N01 | | | | - | STRING |
| - | 3 | "I","J","K" | - | - | 7/2 |

© Siemens AG 2004 All Rights Reserved

| 10652 | CONTOUR_DEF_ANGLE_NAME | | | | FBFA |
|---|---|---|---|---|---|
| - | Name of angle for contour definitions | | | | POWER ON |
| EXP, N01, N12 | | | | - | STRING |
| - | -1 | "ANG" | - | - | 0/0 |

| 10654 | RADIUS_NAME | | | | FBFA |
|---|---|---|---|---|---|
| - | Name of radius for contour definitions | | | | POWER ON |
| EXP, N01, N12 | | | | - | STRING |
| - | -1 | "RND" | - | - | 0/0 |

| 10656 | CHAMFER_NAME | | | | FBFA |
|---|---|---|---|---|---|
| - | Name of chamfer for contour definitions | | | | POWER ON |
| EXP, N01, N12 | | | | - | STRING |
| - | -1 | "CHR" | - | - | 0/0 |

| 10660 | INTERMEDIATE_POINT_NAME_TAB | | | | K2 |
|---|---|---|---|---|---|
| - | Name of intermediate point coordinates for G2/G3 | | | | POWER ON |
| EXP, N01 | | | | - | STRING |
| - | 3 | "I1","J1","K1" | - | - | 7/2 |

| 10670 | STAT_NAME | | | | F2 |
|---|---|---|---|---|---|
| - | Name of state information | | | | POWER ON |
| N01, N09 | | | | - | STRING |
| - | -1 | "STAT" | - | - | 7/2 |

| 10672 | TU_NAME | | | | F2 |
|---|---|---|---|---|---|
| - | Name of state information of axes | | | | POWER ON |
| N01, N09 | | | | - | STRING |
| - | -1 | "TU" | - | - | 7/2 |

| 10674 | PO_WITHOUT_POLY | | | | F2 |
|---|---|---|---|---|---|
| - | Polynomial programming programmable without G function POLY | | | | POWER ON |
| N01 | | | | - | BOOLEAN |
| - | - | FALSE | - | - | 7/2 |

| 10700 | PREPROCESSING_LEVEL | | | | V2 |
|---|---|---|---|---|---|
| - | Program preprocessing level | | | | POWER ON |
| N01, N02 | | | | - | BYTE |
| - | - | 1 | - | - | 2/2 |

© Siemens AG 2004 All Rights Reserved

| | | | | | |
|---|---|---|---|---|---|
| **10702** | **IGNORE_SINGLEBLOCK_MASK** | | | | K1 |
| - | Prevents stopping at specific blocks in single block mode | | | | POWER ON |
| N01 | | | | - | DWORD |
| - | - | 0 | 0 | 0xFFFF | 7/2 |

| | | | | | |
|---|---|---|---|---|---|
| **10704** | **DRYRUN_MASK** | | | | V1 |
| - | Dry run feedrate activation | | | | POWER ON |
| N01 | | | | - | BYTE |
| - | - | 0 | 0 | 2 | 7/2 |

| | | | | | |
|---|---|---|---|---|---|
| **10706** | **SLASH_MASK** | | | | PG,A2 |
| - | Activation of block skip | | | | POWER ON |
| N01 | | | | - | BYTE |
| - | - | 0 | 0 | 2 | 7/2 |

| | | | | | |
|---|---|---|---|---|---|
| **10707** | **PROG_TEST_MASK** | | | | K1 |
| - | Program test mode | | | | POWER ON |
| N01 | | | | - | DWORD |
| - | - | 1 | 0 | 1 | 7/2 |

| | | | | | |
|---|---|---|---|---|---|
| **10708** | **SERUPRO_MASK** | | | | K1 |
| - | Seach run modes | | | | POWER ON |
| N01 | | | | - | DWORD |
| - | - | 0 | 0 | 15 | 7/2 |

| | | | | | |
|---|---|---|---|---|---|
| **10710** | **PROG_SD_RESET_SAVE_TAB** | | | | K1 |
| - | Setting data to be updated | | | | POWER ON |
| EXP, N01 | | | | - | DWORD |
| - | 30 | 0,0,0,0,0,0,0,0,0,0,0,0, 0,0,0,0,0,0,0,0,0,0,0,0, 0,0... | - | - | 7/2 |

| | | | | | |
|---|---|---|---|---|---|
| **10711** | **NC_LANGUAGE_CONFIGURATION** | | | | - |
| - | NC language commands of inactive functions | | | | POWER ON |
| EXP, N01 | | | | - | DWORD |
| - | - | 0 | 0 | 4 | 0/0 |

| | | | | | |
|---|---|---|---|---|---|
| **10712** | **NC_USER_CODE_CONF_NAME_TAB** | | | | PA |
| - | List of reconfigured NC codes | | | | POWER ON |
| EXP, N01, N12 | | | | - | STRING |
| - | 200 | ... | - | - | 2/2 |

© Siemens AG 2004 All Rights Reserved

| 10713 | M_NO_FCT_STOPRE | | | | H2 |
|---|---|---|---|---|---|
| - | M function with preprocessing stop | | | | POWER ON |
| EXP, N12, N07 | | | | - | DWORD |
| - | 15 | -1,-1,-1,-1,-1,-1,-1,-1,-1,-1,-1,-1,-1,-1,-1... | - | - | 7/2 |

| 10714 | M_NO_FCT_EOP | | | | S1 |
|---|---|---|---|---|---|
| - | M funct. f. spindle active after reset | | | | POWER ON |
| EXP, N07 | | | | - | DWORD |
| - | - | -1 | - | - | 7/2 |

| 10715 | M_NO_FCT_CYCLE | | | | FBFA,K1 |
|---|---|---|---|---|---|
| - | M number for tool change cycle call | | | | POWER ON |
| EXP, N12, N07 | | | | - | DWORD |
| - | 10 | -1,-1,-1,-1,-1,-1,-1,-1,-1,-1,-1 | - | - | 7/2 |

| 10716 | M_NO_FCT_CYCLE_NAME | | | | FBFA,K1 |
|---|---|---|---|---|---|
| - | Name of tool changing cycle for M function | | | | POWER ON |
| EXP, N12, N07 | | | | - | STRING |
| - | 10 | | - | - | 7/2 |

| 10717 | T_NO_FCT_CYCLE_NAME | | | | FBFA,K1 |
|---|---|---|---|---|---|
| - | Name of tool changing cycle for T function | | | | POWER ON |
| EXP, N12, N07 | | | | - | STRING |
| - | -1 | | - | - | 7/2 |

| 10718 | M_NO_FCT_CYCLE_PAR | | | | - |
|---|---|---|---|---|---|
| - | M function replacement with parameters | | | | POWER ON |
| EXP, N12, N07 | | | | - | DWORD |
| - | - | -1 | - | - | 7/2 |

| 10719 | T_NO_FCT_CYCLE_MODE | | | | K1 |
|---|---|---|---|---|---|
| - | Setting of T function substitution | | | | POWER ON |
| EXP, N12, N07 | | | | - | DWORD |
| - | - | 0 | 0 | 1 | 7/2 |

| 10720 | OPERATING_MODE_DEFAULT | | | | H2 |
|---|---|---|---|---|---|
| - | Initial setting of mode after Power On | | | | POWER ON |
| N01 | | | | - | BYTE |
| - | 10 | 7,7,7,7,7,7,7,7,7,7 | 0 | 12 | 7/2 |

© Siemens AG 2004 All Rights Reserved

| | | | | | |
|---|---|---|---|---|---|
| **10722** | **AXCHANGE_MASK** | | | | K5 |
| - | Parametrization of axis exchange | | | | POWER ON |
| EXP, N01 | | | | - | DWORD |
| - | - | 0 | 0 | 0xFFFF | 7/2 |

| | | | | | |
|---|---|---|---|---|---|
| **10731** | **JOG_MODE_KEYS_EDGETRIGGRD** | | | | IAF |
| - | Functioning of the JOG keys | | | | POWER ON |
| EXP, N01 | | | | - | BOOLEAN |
| - | - | TRUE | - | - | 0/0 |

| | | | | | |
|---|---|---|---|---|---|
| **10735** | **JOG_MODE_MASK** | | | | - |
| - | enable jog in auto | | | | POWER ON |
| EXP, N01 | | | | - | DWORD |
| - | - | 0 | 0 | 0x1 | 7/2 |

| | | | | | |
|---|---|---|---|---|---|
| **10760** | **G53_TOOLCORR** | | | | FBFA |
| - | Method of operation of G53, G153 and SUPA | | | | POWER ON |
| N12 | | | | - | BOOLEAN |
| - | - | FALSE | - | - | 7/2 |

| | | | | | |
|---|---|---|---|---|---|
| **10780** | **UNLOCK_EDIT_MODESWITCH** | | | | - |
| - | Cancel start disable when editing a part program | | | | POWER ON |
| EXP, N01 | | | | - | BOOLEAN |
| - | - | FALSE | - | - | 0/0 |

| | | | | | |
|---|---|---|---|---|---|
| **10800** | **EXTERN_CHAN_SYNC_M_NO_MIN** | | | | FBFA |
| - | 1st M function for channel synchronization | | | | POWER ON |
| EXP, N12 | | | | - | DWORD |
| - | - | -1 | - | - | 7/2 |

| | | | | | |
|---|---|---|---|---|---|
| **10802** | **EXTERN_CHAN_SYNC_M_NO_MAX** | | | | FBFA |
| - | Last M function for channel synchr. | | | | POWER ON |
| EXP, N12 | | | | - | DWORD |
| - | - | -1 | - | - | 7/2 |

| | | | | | |
|---|---|---|---|---|---|
| **10804** | **EXTERN_M_NO_SET_INT** | | | | FBFA |
| - | M function to activate ASUB | | | | POWER ON |
| EXP, N12 | | | | - | DWORD |
| - | - | 96 | - | - | 7/2 |

© Siemens AG 2004 All Rights Reserved

| 10806 | EXTERN_M_NO_DISABLE_INT | | | | FBFA |
|---|---|---|---|---|---|
| - | M function to deactivate ASUB | | | | POWER ON |
| EXP, N12 | | | | - | DWORD |
| - | - | 97 | - | - | 7/2 |

| 10808 | EXTERN_INTERRUPT_BITS_M96 | | | | FBFA |
|---|---|---|---|---|---|
| - | Activate interrupt program (ASUB) | | | | POWER ON |
| EXP, N12 | | | | - | DWORD |
| - | - | 0 | - | - | 7/2 |

| 10810 | EXTERN_MEAS_G31_P_SIGNAL | | | | FBFA |
|---|---|---|---|---|---|
| - | Config. of measuring inputs for G31 P.. | | | | POWER ON |
| EXP, N12 | | | | - | BYTE |
| - | 4 | 1,1,1,1 | 0 | 3 | 7/2 |

| 10812 | EXTERN_DOUBLE_TURRET_ON | | | | FBFA |
|---|---|---|---|---|---|
| - | Double turret with G68 | | | | POWER ON |
| EXP, N12 | | | | - | BOOLEAN |
| - | - | FALSE | - | - | 7/2 |

| 10814 | EXTERN_M_NO_MAC_CYCLE | | | | FBFA |
|---|---|---|---|---|---|
| - | Macro call via M function | | | | POWER ON |
| EXP, N12 | | | | - | DWORD |
| - | 10 | -1,-1,-1,-1,-1,-1,-1,-1,-1,-1 | - | - | 7/2 |

| 10815 | EXTERN_M_NO_MAC_CYCLE_NAME | | | | FBFA |
|---|---|---|---|---|---|
| - | Name of subroutine for M function macro call | | | | POWER ON |
| EXP, N12 | | | | - | STRING |
| - | 10 | | - | - | 7/2 |

| 10816 | EXTERN_G_NO_MAC_CYCLE | | | | FBFA |
|---|---|---|---|---|---|
| - | G function for macro call | | | | POWER ON |
| EXP, N12 | | | | - | DOUBLE |
| - | 50 | -1.,-1.,-1.,-1.,-1.,-1.,-1.,-1.,-1.,-1.... | - | - | 7/2 |

| 10817 | EXTERN_G_NO_MAC_CYCLE_NAME | | | | FBFA |
|---|---|---|---|---|---|
| - | Name of subroutine for G function macro call | | | | POWER ON |
| EXP, N12 | | | | - | STRING |
| - | 50 | | - | - | 7/2 |

© Siemens AG 2004 All Rights Reserved

| 10818 | EXTERN_INTERRUPT_NUM_ASUP | | | | FBFA |
|---|---|---|---|---|---|
| - | Interrupt number for ASUP start (M96) | | | | POWER ON |
| EXP, N12 | | | | - | BYTE |
| - | - | 1 | 1 | 8 | 7/2 |

| 10820 | EXTERN_INTERRUPT_NUM_RETRAC | | | | FBFA |
|---|---|---|---|---|---|
| - | Interrupt number for rapid retraction (G10.6) | | | | POWER ON |
| EXP, N12 | | | | - | BYTE |
| - | - | 2 | 1 | 8 | 7/2 |

| 10850 | MM_EXTERN_MAXNUM_OEM_GCODES | | | | - |
|---|---|---|---|---|---|
| - | Maximum number of OEM G codes | | | | POWER ON |
| EXP, N01, N12 | | | | - | DWORD |
| - | - | 0 | 0 | 1000 | 1/1 |

| 10880 | MM_EXTERN_CNC_SYSTEM | | | | FBFA |
|---|---|---|---|---|---|
| - | Definition of the control system to be adapted | | | | POWER ON |
| N01, N12 | | | | - | DWORD |
| - | - | 1 | 1 | 3 | 7/2 |

| 10881 | MM_EXTERN_GCODE_SYSTEM | | | | FBFA |
|---|---|---|---|---|---|
| - | ISO_3 Mode: GCodeSystem | | | | POWER ON |
| N01, N12 | | | | - | DWORD |
| - | - | 0 | 0 | 2 | 7/2 |

| 10882 | NC_USER_EXTERN_GCODES_TAB | | | | FBFA |
|---|---|---|---|---|---|
| - | List of user-specific G commands of an external NC language | | | | POWER ON |
| N12 | | | | - | STRING |
| - | 60 | | - | - | 2/2 |

| 10884 | EXTERN_FLOATINGPOINT_PROG | | | | FBFA |
|---|---|---|---|---|---|
| - | Evaluation of programmed values without decimal point | | | | POWER ON |
| N12 | | | | - | BOOLEAN |
| - | - | TRUE | - | - | 7/2 |

| 10886 | EXTERN_INCREMENT_SYSTEM | | | | FBFA |
|---|---|---|---|---|---|
| - | Incremental system in external language mode | | | | POWER ON |
| N12 | | | | - | BOOLEAN |
| - | - | FALSE | - | - | 7/2 |

© Siemens AG 2004 All Rights Reserved

| | | | | | |
|---|---|---|---|---|---|
| **10888** | **EXTERN_DIGITS_TOOL_NO** | | | | FBFA |
| - | Number of positions for T number in external language mode | | | | POWER ON |
| N12 | | | | - | BYTE |
| - | - | 2 | 0 | 8 | 7/2 |

| | | | | | |
|---|---|---|---|---|---|
| **10890** | **EXTERN_TOOLPROG_MODE** | | | | FBFA |
| - | Tool change programming for external language | | | | POWER ON |
| N12 | | | | - | DWORD |
| - | - | 0 | - | - | 7/2 |

| | | | | | |
|---|---|---|---|---|---|
| **10900** | **INDEX_AX_LENGTH_POS_TAB_1** | | | | T1 |
| - | Number of positions for indexing axis table 1 | | | | RESET |
| N09 | | | | - | DWORD |
| - | - | 0 | 0 | 60 | 7/2 |

| | | | | | |
|---|---|---|---|---|---|
| **10910** | **INDEX_AX_POS_TAB_1** | | | | T1 |
| mm/inch, degrees | Indexing position table 1 | | | | RESET |
| N09 | | | | - | DOUBLE |
| - | 60 | 0.,0.,0.,0.,0.,0.,0.,0.,0.,0.,0.,0.... | - | - | 7/2 |

| | | | | | |
|---|---|---|---|---|---|
| **10920** | **INDEX_AX_LENGTH_POS_TAB_2** | | | | T1 |
| - | Number of positions for indexing axis table 2 | | | | RESET |
| N09 | | | | - | DWORD |
| - | - | 0 | 0 | 60 | 7/2 |

| | | | | | |
|---|---|---|---|---|---|
| **10930** | **INDEX_AX_POS_TAB_2** | | | | T1 |
| mm/inch, degrees | Indexing position table 2 | | | | RESET |
| N09 | | | | - | DOUBLE |
| - | 60 | 0.,0.,0.,0.,0.,0.,0.,0.,0.,0.,0.,0.... | - | - | 7/2 |

| | | | | | |
|---|---|---|---|---|---|
| **10940** | **INDEX_AX_MODE** | | | | DA |
| - | settings of division position | | | | POWER ON |
| EXP | | | | - | DWORD |
| - | - | 0 | 0 | 1 | 7/2 |

| | | | | | |
|---|---|---|---|---|---|
| **11100** | **AUXFU_MAXNUM_GROUP_ASSIGN** | | | | H2 |
| - | Number of auxiliary functions distr. amongst aux. fct. groups | | | | POWER ON |
| N01, N07, N02 | | | | - | DWORD |
| - | - | 1 | 1 | 255 | 7/2 |

© Siemens AG 2004 All Rights Reserved

| | | | | | |
|---|---|---|---|---|---|
| **11110** | **AUXFU_GROUP_SPEC** | | | | H2 |
| - | Auxiliary function group specification | | | | POWER ON |
| N07 | | | | - | DWORD |
| - | 64 | 0x81,0x21,0x41,0x41,0x41,0x41,0x41,0x41... | - | - | 7/2 |

| | | | | | |
|---|---|---|---|---|---|
| **11120** | **LUD_EXTENDED_SCOPE** | | | | PG |
| - | Activate function 'program global user data (PUD)' | | | | POWER ON |
| N01 | | | | - | BOOLEAN |
| - | - | FALSE | - | - | 7/2 |

| | | | | | |
|---|---|---|---|---|---|
| **11140** | **GUD_AREA_SAVE_TAB** | | | | - |
| - | Add. saving for GUD modules | | | | IMMEDIATELY |
| N01 | | | | - | DWORD |
| - | 9 | 0,0,0,0,0,0,0,0,0 | - | - | 7/2 |

| | | | | | |
|---|---|---|---|---|---|
| **11160** | **ACCESS_EXEC_CST** | | | | - |
| - | Execution right for /_N_CST_DIR | | | | POWER ON |
| N01 | | | | - | BYTE |
| - | - | 7 | - | - | 7/2 |

| | | | | | |
|---|---|---|---|---|---|
| **11161** | **ACCESS_EXEC_CMA** | | | | - |
| - | Execution right for /_N_CMA_DIR | | | | POWER ON |
| N01 | | | | - | BYTE |
| - | - | 7 | - | - | 7/2 |

| | | | | | |
|---|---|---|---|---|---|
| **11162** | **ACCESS_EXEC_CUS** | | | | - |
| - | Execution right for /_N_CUS_DIR | | | | POWER ON |
| N01 | | | | - | BYTE |
| - | - | 7 | - | - | 7/3 |

| | | | | | |
|---|---|---|---|---|---|
| **11165** | **ACCESS_WRITE_CST** | | | | - |
| - | Write protection for directory /_N_CST_DIR | | | | POWER ON |
| N01 | | | | - | DWORD |
| - | - | -1 | - | - | 7/2 |

| | | | | | |
|---|---|---|---|---|---|
| **11166** | **ACCESS_WRITE_CMA** | | | | - |
| - | Write protection for directory /_N_CMA_DIR | | | | POWER ON |
| N01 | | | | - | DWORD |
| - | - | -1 | - | - | 7/2 |

© Siemens AG 2004 All Rights Reserved

| | | | | | |
|---|---|---|---|---|---|
| **11167** | **ACCESS_WRITE_CUS** | | | | - |
| - | Write protection for directory /_N_CUS_DIR | | | | POWER ON |
| N01 | | | | - | DWORD |
| - | - | -1 | - | - | 7/3 |

| | | | | | |
|---|---|---|---|---|---|
| **11170** | **ACCESS_WRITE_SACCESS** | | | | - |
| - | Write protection for _N_SACCESS_DEF | | | | POWER ON |
| N01 | | | | - | BYTE |
| - | - | 7 | - | - | 7/2 |

| | | | | | |
|---|---|---|---|---|---|
| **11171** | **ACCESS_WRITE_MACCESS** | | | | - |
| - | Write protection for _N_MACCESS_DEF | | | | POWER ON |
| N01 | | | | - | BYTE |
| - | - | 7 | - | - | 7/2 |

| | | | | | |
|---|---|---|---|---|---|
| **11172** | **ACCESS_WRITE_UACCESS** | | | | - |
| - | Write protection for _N_UACCESS_DEF | | | | POWER ON |
| N01 | | | | - | BYTE |
| - | - | 7 | - | - | 7/3 |

| | | | | | |
|---|---|---|---|---|---|
| **11200** | **INIT_MD** | | | | IAF,IAD,IA |
| - | Standard machine data loaded at next Power On | | | | POWER ON |
| EXP, N01 | | | | - | BYTE |
| - | - | 0 | - | - | 7/2 |

| | | | | | |
|---|---|---|---|---|---|
| **11210** | **UPLOAD_MD_CHANGES_ONLY** | | | | IAD |
| - | MD backup of changed MD only | | | | IMMEDIATELY |
| N01, N05 | | | | - | BYTE |
| - | - | 0xFF | - | - | 7/3 |

| | | | | | |
|---|---|---|---|---|---|
| **11220** | **INI_FILE_MODE** | | | | IAD |
| - | Error response to INI file errors | | | | RESET |
| N01, N05 | | | | - | BYTE |
| - | - | 1 | 0 | 2 | 7/2 |

| | | | | | |
|---|---|---|---|---|---|
| **11230** | **MD_FILE_STYLE** | | | | IAD |
| - | Structure of MD files on 'upload' | | | | IMMEDIATELY |
| N01, N05 | | | | - | BYTE |
| - | - | 3 | - | - | 7/3 |

© Siemens AG 2004 All Rights Reserved

| 11240 | PROFIBUS_SDB_NUMBER | | | | K4,FBU |
|---|---|---|---|---|---|
| - | SDB1000 number | | | | POWER ON |
| N01, N05 | | | | - | DWORD |
| - | 4 | -1,-1,-1,-1 | -1 | 7 | 2/2 |
| 810d | - | - | - | - | -1/- |

| 11250 | PROFIBUS_SHUTDOWN_TYPE | | | | G3,FBU |
|---|---|---|---|---|---|
| - | Profibus shutdown handling | | | | POWER ON |
| EXP, N01 | | | | - | BYTE |
| - | - | 0 | 0 | 2 | 7/2 |

| 11270 | DEFAULT_VALUES_MEM_MASK | | | | PGA |
|---|---|---|---|---|---|
| - | Activation of default values for NC language elem. | | | | POWER ON |
| N01 | | | | - | DWORD |
| - | - | 0 | - | - | 7/2 |

| 11280 | WPD_INI_MODE | | | | IAD |
|---|---|---|---|---|---|
| - | Handling of INI files in workpiece directory | | | | POWER ON |
| N01 | | | | - | BYTE |
| - | - | 0 | 0 | 1 | 7/2 |

| 11290 | DRAM_FILESYSTEM_MASK | | | | IAD |
|---|---|---|---|---|---|
| - | Select directories in DRAM | | | | POWER ON |
| N01 | | | | - | DWORD |
| - | - | 0 | - | - | 2/2 |

| 11291 | DRAM_FILESYST_SAVE_MASK | | | | IAD |
|---|---|---|---|---|---|
| - | Selection of directories in DRAM | | | | POWER ON |
| N01 | | | | - | DWORD |
| - | - | 0x07 | - | - | 2/2 |

| 11292 | DRAM_FILESYST_CONFIG | | | | - |
|---|---|---|---|---|---|
| - | Configuration of the DRAM file system | | | | POWER ON |
| EXP | | | | - | BYTE |
| - | - | 0x01 | - | - | 0/0 |

| 11295 | PROTOC_FILE_MEM | | | | - |
|---|---|---|---|---|---|
| - | Memory type for log files | | | | POWER ON |
| N01 | | | | - | BYTE |
| - | 10 | 0,1,1,1,1,0,0,1,1,1 | 0 | 1 | 1/1 |

© Siemens AG 2004 All Rights Reserved

| 11297 | PROTOC_IPOCYCLE_CONTROL | | | | - |
|---|---|---|---|---|---|
| - | to be defined | | | | POWER ON |
| N01 | | | | - | BYTE |
| - | 10 | 1,1,1,1,1,1,1,1,1,1 | 0 | 1 | 1/1 |

| 11300 | JOG_INC_MODE_LEVELTRIGGRD | | | | H1 |
|---|---|---|---|---|---|
| - | INC and REF in jog mode | | | | POWER ON |
| N01 | | | | - | BOOLEAN |
| - | - | TRUE | - | - | 7/2 |

| 11310 | HANDWH_REVERSE | | | | H1 |
|---|---|---|---|---|---|
| - | Threshold for direction change handwheel | | | | POWER ON |
| N09 | | | | - | BYTE |
| - | - | 2 | - | - | 7/2 |

| 11320 | HANDWH_IMP_PER_LATCH | | | | H1 |
|---|---|---|---|---|---|
| - | Handwheel pulses per detent position | | | | POWER ON |
| N09 | | | | - | DOUBLE |
| - | 6 | 1.,1.,1.,1.,1.,1. | - | - | 7/2 |

| 11322 | CONTOURHANDWH_IMP_PER_LATCH | | | | H1 |
|---|---|---|---|---|---|
| - | Contour handwheel pulses per detent position | | | | POWER ON |
| N09 | | | | - | DOUBLE |
| - | 6 | 1.,1.,1.,1.,1.,1. | - | - | 7/2 |

| 11324 | HANDWH_VDI_REPRESENTATION | | | | OEM |
|---|---|---|---|---|---|
| - | Display of handwheel number in VDI Interface | | | | POWER ON |
| N01 | | | | - | DWORD |
| - | - | 0 | 0 | 1 | 7/2 |

| 11330 | JOG_INCR_SIZE_TAB | | | | H1 |
|---|---|---|---|---|---|
| - | Increment size for INC/handwheel | | | | POWER ON |
| EXP, N09 | | | | - | DOUBLE |
| - | 5 | 1.,10.,100.,1000.,10000. | - | - | 7/2 |

| 11340 | ENC_HANDWHEEL_SEGMENT_NR | | | | FBMA |
|---|---|---|---|---|---|
| - | 3rd handwheel: type of drive | | | | POWER ON |
| EXP, N01 | | | | - | BYTE |
| - | - | 1 | 1 | 1 | 0/0 |

© Siemens AG 2004 All Rights Reserved

| 11342 | ENC_HANDWHEEL_MODULE_NR | | | | FBMA |
|---|---|---|---|---|---|
| - | 3rd handwheel: drive no./meas. circuit no. | | | | POWER ON |
| N01 | | | | - | BYTE |
| - | - | 0 | 0 | 31 | 7/2 |

| 11344 | ENC_HANDWHEEL_INPUT_NR | | | | FBMA |
|---|---|---|---|---|---|
| - | 3rd handwheel: Input to module/meas. circ. Board | | | | POWER ON |
| N01 | | | | - | BYTE |
| - | - | 1 | 1 | 2 | 7/2 |

| 11346 | HANDWH_TRUE_DISTANCE | | | | FBMA |
|---|---|---|---|---|---|
| - | Handwheel default path or velocity | | | | POWER ON |
| N01 | | | | - | BYTE |
| - | - | 1 | 0 | 3 | 7/2 |

| 11350 | HANDWHEEL_SEGMENT | | | | - |
|---|---|---|---|---|---|
| - | handwheel segment | | | | POWER ON |
| N09 | | | | - | BYTE |
| - | 6 | 0,0,0,0,0,0 | - | - | 7/2 |
| 810d | - | 1,1,1,0,0,0 | - | - | -/- |
| 840d-2a2c | - | 1,1,1,0,0,0 | - | - | -/- |
| 840d-4a1cg | - | 1,1,1,0,0,0 | - | - | -/- |
| 840d-6a2c | - | 1,1,1,0,0,0 | - | - | -/- |
| 840d-12a2c | - | 1,1,1,0,0,0 | - | - | -/- |
| 840d-31a10c | - | 1,1,1,0,0,0 | - | - | -/- |
| 840di-basic | - | 1,1,0,0,0,0 | - | - | -/- |
| 840di-universal | - | 1,1,0,0,0,0 | - | - | -/- |
| 840di-plus | - | 1,1,0,0,0,0 | - | - | -/- |

© Siemens AG 2004 All Rights Reserved

| | | | | | |
|---|---|---|---|---|---|
| **11351** | **HANDWHEEL_MODULE** | | | | - |
| - | handwheel modul | | | | POWER ON |
| N09 | | | | - | BYTE |
| - | 6 | 0,0,0,0,0,0 | 0 | 6 | 7/2 |
| 810d | - | 1,1,1,0,0,0 | - | - | -/- |
| 840d-2a2c | - | 1,1,1,0,0,0 | - | - | -/- |
| 840d-4a1cg | - | 1,1,1,0,0,0 | - | - | -/- |
| 840d-6a2c | - | 1,1,1,0,0,0 | - | - | -/- |
| 840d-12a2c | - | 1,1,1,0,0,0 | - | - | -/- |
| 840d-31a10c | - | 1,1,1,0,0,0 | - | - | -/- |
| 840di-basic | - | 1,1,0,0,0,0 | - | - | -/- |
| 840di-universal | - | 1,1,0,0,0,0 | - | - | -/- |
| 840di-plus | - | 1,1,0,0,0,0 | - | - | -/- |

| | | | | | |
|---|---|---|---|---|---|
| **11352** | **HANDWHEEL_INPUT** | | | | - |
| - | handwheel input | | | | POWER ON |
| N09 | | | | - | BYTE |
| - | 6 | 0,0,0,0,0,0 | 0 | 6 | 7/2 |
| 810d | - | 1,2,3,0,0,0 | - | - | -/- |
| 840d-2a2c | - | 1,2,3,0,0,0 | - | - | -/- |
| 840d-4a1cg | - | 1,2,3,0,0,0 | - | - | -/- |
| 840d-6a2c | - | 1,2,3,0,0,0 | - | - | -/- |
| 840d-12a2c | - | 1,2,3,0,0,0 | - | - | -/- |
| 840d-31a10c | - | 1,2,3,0,0,0 | - | - | -/- |
| 840di-basic | - | 1,2,0,0,0,0 | - | - | -/- |
| 840di-universal | - | 1,2,0,0,0,0 | - | - | -/- |
| 840di-plus | - | 1,2,0,0,0,0 | - | - | -/- |

| | | | | | |
|---|---|---|---|---|---|
| **11353** | **HANDWHEEL_LOGIC_ADDRESS** | | | | - |
| - | logical handwheel Address | | | | POWER ON |
| N04, N10 | | | | - | DWORD |
| - | 6 | 0,0,0,0,0,0 | 0 | 8191 | 7/2 |

| | | | | | |
|---|---|---|---|---|---|
| **11380** | **MONITOR_ADDRESS** | | | | STZ |
| - | Test MD for setting NCK code or data for Safety Integrated | | | | IMMEDIATELY |
| EXP, N06 | | | | NBUP, NDLD | DWORD |
| - | - | 0 | - | - | 0/0 |

© Siemens AG 2004 All Rights Reserved

| 11382 | MONITOR_DISPLAY_INT | | | | STZ |
|---|---|---|---|---|---|
| - | INTEGER display of the addressed location | | | | IMMEDIATELY |
| EXP, N06 | | | | NBUP, NDLD | DWORD |
| - | - | 0 | - | - | 0/0 |

| 11384 | MONITOR_DISPLAY_REAL | | | | STZ |
|---|---|---|---|---|---|
| - | REAL display of the addressed location | | | | IMMEDIATELY |
| EXP, N06 | | | | NBUP, NDLD | DOUBLE |
| - | - | 0.0 | - | - | 0/0 |

| 11386 | MONITOR_INPUT_INT | | | | STZ |
|---|---|---|---|---|---|
| - | INTEGER input for the addressed location | | | | IMMEDIATELY |
| EXP, N06 | | | | NBUP, NDLD | DWORD |
| - | - | 0 | - | - | 0/0 |

| 11388 | MONITOR_INPUT_REAL | | | | STZ |
|---|---|---|---|---|---|
| - | REAL input for addressed location | | | | IMMEDIATELY |
| EXP, N06 | | | | NBUP, NDLD | DOUBLE |
| - | - | 0.0 | - | - | 0/0 |

| 11390 | MONITOR_INPUT_STROBE | | | | STZ |
|---|---|---|---|---|---|
| - | Overwrite the addressed location with MONITOR_INT/REAL | | | | IMMEDIATELY |
| EXP, N06 | | | | NBUP, NDLD | BYTE |
| - | - | 0 | 0 | 2 | 0/0 |

| 11398 | AXIS_VAR_SERVER_SENSITIVE | | | | B3 |
|---|---|---|---|---|---|
| - | Axis-Var-Server behavior | | | | POWER ON |
| EXP | | | | - | BYTE |
| - | - | 0 | - | - | 7/2 |

| 11400 | TRACE_SELECT | | | | - |
|---|---|---|---|---|---|
| - | Activation of internal trace functions | | | | POWER ON |
| EXP | | | | - | DWORD |
| - | - | 0 | - | - | 0/0 |

| 11410 | SUPPRESS_ALARM_MASK | | | | D1 |
|---|---|---|---|---|---|
| - | Screenform for supporting special alarm outputs | | | | POWER ON |
| EXP, N06 | | | | - | DWORD |
| - | - | 0x108000 | - | - | 7/2 |

© Siemens AG 2004 All Rights Reserved

| 11411 | ENABLE_ALARM_MASK | | | | D1 |
|---|---|---|---|---|---|
| - | Activation of warnings | | | | RESET |
| EXP | | | | - | DWORD |
| - | - | 0 | - | - | 7/2 |

| 11412 | ALARM_REACTION_CHAN_NOREADY | | | | D1 |
|---|---|---|---|---|---|
| - | Alarm response CHAN_NOREADY permitted | | | | POWER ON |
| EXP, N01 | | | | - | BOOLEAN |
| - | - | FALSE | - | - | 7/2 |

| 11413 | ALARM_PAR_DISPLAY_TEXT | | | | D1 |
|---|---|---|---|---|---|
| - | Alarm parameter as text output | | | | POWER ON |
| EXP, N01 | | | | - | BOOLEAN |
| - | - | FALSE | - | - | 0/0 |

| 11420 | LEN_PROTOCOL_FILE | | | | PGA |
|---|---|---|---|---|---|
| - | Size of protocol files (kB) | | | | POWER ON |
| N01 | | | | - | DWORD |
| - | - | 1 | 1 | 1000000 | 7/2 |

| 11450 | SEARCH_RUN_MODE | | | | K1 |
|---|---|---|---|---|---|
| - | Parameterization for search run | | | | POWER ON |
| EXP, N01 | | | | - | DWORD |
| - | - | 0 | 0 | 0x1F | 7/2 |

| 11460 | OSCILL_MODE_MASK | | | | P5 |
|---|---|---|---|---|---|
| - | Mode screenform for asynchronous oscillation | | | | POWER ON |
| N09 | | | | - | DWORD |
| - | - | 0x0 | 0 | 0xFFFF | 7/2 |

| 11470 | REPOS_MODE_MASK | | | | K1 |
|---|---|---|---|---|---|
| - | Repositioning properties | | | | POWER ON |
| EXP, N01 | | | | - | DWORD |
| - | - | 0x8 | 0 | 0xFFFF | 7/2 |

| 11480 | PLC_OB1_TRACE_DEPTH | | | | - |
|---|---|---|---|---|---|
| - | Buffer depth of PLC trace data at OB1 | | | | POWER ON |
| EXP, N03, N09 | | | | - | DWORD |
| - | - | 2 | 2 | 8 | 2/2 |

© Siemens AG 2004 All Rights Reserved

| | | | | | |
|---|---|---|---|---|---|
| **11481** | **PLC_OB35_TRACE_DEPTH** | | | | - |
| - | Buffer depth of PLC trace data at OB35 | | | | POWER ON |
| EXP, N03, N09 | | | | - | DWORD |
| - | - | 2 | 2 | 8 | 2/2 |

| | | | | | |
|---|---|---|---|---|---|
| **11482** | **PLC_OB40_TRACE_DEPTH** | | | | - |
| - | Buffer depth of PLC trace data at OB40 | | | | POWER ON |
| EXP, N03, N09 | | | | - | DWORD |
| - | - | 2 | 2 | 8 | 2/2 |

| | | | | | |
|---|---|---|---|---|---|
| **11500** | **PREVENT_SYNACT_LOCK** | | | | S5,FBSY |
| - | Protected synchronized actions | | | | POWER ON |
| N01, N09 | | | | - | DWORD |
| - | 2 | 0,0 | 0 | 255 | 7/2 |

| | | | | | |
|---|---|---|---|---|---|
| **11510** | **IPO_MAX_LOAD** | | | | FBSY |
| % | Max. permitted IPO load | | | | POWER ON |
| N01, N05 | | | | - | DOUBLE |
| - | - | 0.00 | 0.0 | 100.0 | 7/2 |

| | | | | | |
|---|---|---|---|---|---|
| **11550** | **STOP_MODE_MASK** | | | | V1 |
| - | Defines the stop behavior. | | | | POWER ON |
| N01 | | | | - | DWORD |
| - | - | 0 | 0 | 0x1 | 7/2 |

| | | | | | |
|---|---|---|---|---|---|
| **11600** | **BAG_MASK** | | | | K1 |
| - | Defines mode group response | | | | POWER ON |
| N01 | | | | - | DWORD |
| - | - | 0 | 0 | 0x3 | 7/2 |

| | | | | | |
|---|---|---|---|---|---|
| **11602** | **ASUP_START_MASK** | | | | K1 |
| - | Ignore stop conditions for ASUP | | | | POWER ON |
| N01 | | | | - | DWORD |
| - | - | 0 | 0 | 0x7 | 7/2 |

| | | | | | |
|---|---|---|---|---|---|
| **11604** | **ASUP_START_PRIO_LEVEL** | | | | K1 |
| - | Priorities for 'ASUP_START_MASK effective' | | | | POWER ON |
| N01 | | | | - | DWORD |
| - | - | 0 | 0 | 128 | 7/2 |

© Siemens AG 2004 All Rights Reserved

| | | | | | |
|---|---|---|---|---|---|
| **11610** | **ASUP_EDITABLE** | | | | K1 |
| - | Activation of a user-specific ASUP program | | | | POWER ON |
| N01 | | | | - | DWORD |
| - | - | 0 | 0 | 3 | 7/2 |

| | | | | | |
|---|---|---|---|---|---|
| **11612** | **ASUP_EDIT_PROTECTION_LEVEL** | | | | K1 |
| - | Protection level of the user-specific ASUP program | | | | POWER ON |
| N01 | | | | - | DWORD |
| - | - | 2 | 0 | 7 | 7/2 |

| | | | | | |
|---|---|---|---|---|---|
| **11620** | **PROG_EVENT_NAME** | | | | K1 |
| - | Program name for PROG_EVENT | | | | POWER ON |
| EXP, N12 | | | | - | STRING |
| - | -1 | | - | - | 7/2 |

| | | | | | |
|---|---|---|---|---|---|
| **11640** | **ENABLE_CHAN_AX_GAP** | | | | K2 |
| - | Allow channel axis gaps in AXCONF_MACHAX_USED | | | | POWER ON |
| N01, N11 | | | | - | DWORD |
| - | - | 0x0 | 0 | 0x1 | 2/2 |

| | | | | | |
|---|---|---|---|---|---|
| **11660** | **NUM_EG** | | | | M3 |
| - | No. of possible 'Electronic gear boxes' | | | | POWER ON |
| N09 | | | | - | BYTE |
| - | - | 0 | - | - | 1/1 |

| | | | | | |
|---|---|---|---|---|---|
| **11700** | **PERMISSIVE_FLASH_TAB** | | | | IAD |
| - | Codes for NC card | | | | POWER ON |
| EXP, N01 | | | | - | DWORD |
| - | 6 | 0,0,0,0,0,0,0,0 | - | - | 1/1 |

| | | | | | |
|---|---|---|---|---|---|
| **11750** | **NCK_LEAD_FUNCTION_MASK** | | | | - |
| - | Functions for master value coupling | | | | NEW CONF |
| N09 | | | | - | DWORD |
| - | - | 0x00 | 0 | 0x10 | 1/1 |

| | | | | | |
|---|---|---|---|---|---|
| **11752** | **NCK_TRAIL_FUNCTION_MASK** | | | | - |
| - | Functions for coupled motion | | | | NEW CONF |
| N09 | | | | - | DWORD |
| - | - | 0x200 | 0 | 0x210 | 1/1 |

© Siemens AG 2004 All Rights Reserved

## 2.5.2 System settings

| | | | | | |
|---|---|---|---|---|---|
| **12000** | **OVR_AX_IS_GRAY_CODE** | | | | V1 |
| - | Axis feedrate override switch Gray-coded | | | | POWER ON |
| EXP, N10 | | | | - | BOOLEAN |
| - | - | TRUE | - | - | 7/2 |

| | | | | | |
|---|---|---|---|---|---|
| **12010** | **OVR_FACTOR_AX_SPEED** | | | | V1 |
| - | Evaluation of axis feedrate override switch | | | | POWER ON |
| EXP, N10 | | | | - | DOUBLE |
| - | 31 | 0.00,0.01,0.02,0.04,0.06,0.08,0.10... | 0.00 | 2.00 | 7/2 |

| | | | | | |
|---|---|---|---|---|---|
| **12020** | **OVR_FEED_IS_GRAY_CODE** | | | | V1 |
| - | Path feedrate override switch Gray-coded | | | | POWER ON |
| EXP, N10 | | | | - | BOOLEAN |
| - | - | TRUE | - | - | 7/2 |

| | | | | | |
|---|---|---|---|---|---|
| **12030** | **OVR_FACTOR_FEEDRATE** | | | | V1 |
| - | Evaluation of path feedrate override switch | | | | POWER ON |
| EXP, N10 | | | | - | DOUBLE |
| - | 31 | 0.00,0.01,0.02,0.04,0.06,0.08,0.10... | 0.00 | 2.00 | 7/2 |

| | | | | | |
|---|---|---|---|---|---|
| **12040** | **OVR_RAPID_IS_GRAY_CODE** | | | | V1 |
| - | Rapid traverse override switch Gray-coded | | | | POWER ON |
| EXP, N10 | | | | - | BOOLEAN |
| - | - | TRUE | - | - | 7/2 |

| | | | | | |
|---|---|---|---|---|---|
| **12050** | **OVR_FACTOR_RAPID_TRA** | | | | V1 |
| - | Evaluation of rapid traverse override switch | | | | POWER ON |
| EXP, N10 | | | | - | DOUBLE |
| - | 31 | 0.00,0.01,0.02,0.04,0.06,0.08,0.10... | 0.00 | 1.00 | 7/2 |

| | | | | | |
|---|---|---|---|---|---|
| **12060** | **OVR_SPIND_IS_GRAY_CODE** | | | | V1 |
| - | Spindle override switch Gray-coded | | | | POWER ON |
| EXP, N10 | | | | - | BOOLEAN |
| - | - | TRUE | - | - | 7/2 |

© Siemens AG 2004 All Rights Reserved

| 12070 | OVR_FACTOR_SPIND_SPEED | | | | V1 |
|---|---|---|---|---|---|
| - | Evaluation of spindle override switch | | | | POWER ON |
| EXP, N10 | | | | - | DOUBLE |
| - | 31 | 0.5,0.55,0.60,0.65,0.70 ,0.75,0.80... | 0.00 | 2.00 | 7/2 |

| 12080 | OVR_REFERENCE_IS_PROG_FEED | | | | V1 |
|---|---|---|---|---|---|
| - | Override reference speed | | | | POWER ON |
| N10, N09 | | | | - | BOOLEAN |
| - | - | TRUE | - | - | 7/2 |

| 12082 | OVR_REFERENCE_IS_MIN_FEED | | | | V1 |
|---|---|---|---|---|---|
| - | Specification of the reference of the path override | | | | POWER ON |
| N10, N09 | | | | - | BOOLEAN |
| - | - | FALSE | - | - | 7/2 |

| 12090 | OVR_FUNCTION_MASK | | | | - |
|---|---|---|---|---|---|
| - | Selection of override specifications | | | | RESET |
| N01, N10, N09 | | | | - | DWORD |
| - | - | 0 | 0 | 0x01 | 7/2 |

| 12100 | OVR_FACTOR_LIMIT_BIN | | | | V1 |
|---|---|---|---|---|---|
| - | Limitation for binary-coded override switch | | | | POWER ON |
| EXP, N10 | | | | - | DOUBLE |
| - | - | 1.2 | 0.0 | 2.0 | 7/2 |

| 12200 | RUN_OVERRIDE_0 | | | | FBMA,V1 |
|---|---|---|---|---|---|
| - | Traversing response with override 0 | | | | POWER ON |
| N01, N09 | | | | - | BOOLEAN |
| - | - | FALSE | - | - | 7/2 |

| 12202 | PERMANENT_FEED | | | | FBMA,V1 |
|---|---|---|---|---|---|
| mm/min | Fixed feedrates for linear axes | | | | RESET |
| N01, N09 | | | | - | DOUBLE |
| - | 4 | 0.,0.,0.,0. | - | - | 7/2 |

| 12204 | PERMANENT_ROT_AX_FEED | | | | FBMA |
|---|---|---|---|---|---|
| rev/min | Fixed feedrates for rotary axes | | | | RESET |
| N01, N09 | | | | - | DOUBLE |
| - | 4 | 0.,0.,0.,0. | - | - | 7/2 |

© Siemens AG 2004 All Rights Reserved

| 12205 | PERMANENT_SPINDLE_FEED | | | | FBMA |
|---|---|---|---|---|---|
| rev/min | Fixed feedrates for spindles | | | | RESET |
| N01, N09 | | | | - | DOUBLE |
| - | 4 | 0.,0.,0.,0. | - | - | 7/2 |

| 12300 | CENTRAL_LUBRICATION | | | | - |
|---|---|---|---|---|---|
| - | Central lubrication active | | | | POWER ON |
| N01, N09 | | | | - | BOOLEAN |
| - | - | FALSE | - | - | 7/2 |

| 12510 | NCU_LINKNO | | | | B3 |
|---|---|---|---|---|---|
| - | NCU number in an NCU cluster | | | | POWER ON |
| N01 | | | | - | DWORD |
| - | - | 1 | 1 | 16 | 7/2 |

| 12520 | LINK_TERMINATION | | | | B3 |
|---|---|---|---|---|---|
| - | NCU numbers for which bus termination resistances are activated | | | | POWER ON |
| N01 | | | | LINK | BYTE |
| - | 2 | 0,1 | 0 | 15 | 3/2 |

| 12540 | LINK_BAUDRATE_SWITCH | | | | B3 |
|---|---|---|---|---|---|
| - | Link bus baud rate | | | | POWER ON |
| N01 | | | | LINK | DWORD |
| - | - | 9 | 0 | 9 | 3/2 |

| 12550 | LINK_RETRY_CTR | | | | B3 |
|---|---|---|---|---|---|
| - | Max. no. message frame transmission retries | | | | POWER ON |
| N01 | | | | LINK | DWORD |
| - | - | 4 | 1 | 15 | 3/2 |

| 12701 | AXCT_AXCONF_ASSIGN_TAB1 | | | | B3 |
|---|---|---|---|---|---|
| - | Internal interpolation axis name | | | | POWER ON |
| N01 | | | | CTDE | STRING |
| - | 32 | | - | - | 3/2 |

| 12702 | AXCT_AXCONF_ASSIGN_TAB2 | | | | B3 |
|---|---|---|---|---|---|
| - | Internal interpolation axis name | | | | POWER ON |
| N01 | | | | CTDE | STRING |
| - | 32 | | - | - | 3/2 |

© Siemens AG 2004 All Rights Reserved

| 12703 | AXCT_AXCONF_ASSIGN_TAB3 | | | | B3 |
|---|---|---|---|---|---|
| - | Internal interpolation axis name | | | | POWER ON |
| N01 | | | | CTDE | STRING |
| - | 32 | | - | - | 3/2 |

| 12704 | AXCT_AXCONF_ASSIGN_TAB4 | | | | B3 |
|---|---|---|---|---|---|
| - | Internal interpolation axis name | | | | POWER ON |
| N01 | | | | CTDE | STRING |
| - | 32 | | - | - | 3/2 |

| 12705 | AXCT_AXCONF_ASSIGN_TAB5 | | | | B3 |
|---|---|---|---|---|---|
| - | Internal interpolation axis name | | | | POWER ON |
| N01 | | | | CTDE | STRING |
| - | 32 | | - | - | 3/2 |

| 12706 | AXCT_AXCONF_ASSIGN_TAB6 | | | | B3 |
|---|---|---|---|---|---|
| - | Internal interpolation axis name | | | | POWER ON |
| N01 | | | | CTDE | STRING |
| - | 32 | | - | - | 3/2 |

| 12707 | AXCT_AXCONF_ASSIGN_TAB7 | | | | B3 |
|---|---|---|---|---|---|
| - | Internal interpolation axis name | | | | POWER ON |
| N01 | | | | CTDE | STRING |
| - | 32 | | - | - | 3/2 |

| 12708 | AXCT_AXCONF_ASSIGN_TAB8 | | | | B3 |
|---|---|---|---|---|---|
| - | Internal interpolation axis name | | | | POWER ON |
| N01 | | | | CTDE | STRING |
| - | 32 | | - | - | 3/2 |

| 12709 | AXCT_AXCONF_ASSIGN_TAB9 | | | | B3 |
|---|---|---|---|---|---|
| - | Internal interpolation axis name | | | | POWER ON |
| N01 | | | | CTDE | STRING |
| - | 32 | | - | - | 3/2 |

| 12710 | AXCT_AXCONF_ASSIGN_TAB10 | | | | B3 |
|---|---|---|---|---|---|
| - | Internal interpolation axis name | | | | POWER ON |
| N01 | | | | CTDE | STRING |
| - | 32 | | - | - | 3/2 |

© Siemens AG 2004 All Rights Reserved

| 12711 | AXCT_AXCONF_ASSIGN_TAB11 | | | | B3 |
|---|---|---|---|---|---|
| - | Internal interpolation axis name | | | | POWER ON |
| N01 | | | | CTDE | STRING |
| - | 32 | | - | - | 3/2 |

| 12712 | AXCT_AXCONF_ASSIGN_TAB12 | | | | B3 |
|---|---|---|---|---|---|
| - | Internal interpolation axis name | | | | POWER ON |
| N01 | | | | CTDE | STRING |
| - | 32 | | - | - | 3/2 |

| 12713 | AXCT_AXCONF_ASSIGN_TAB13 | | | | B3 |
|---|---|---|---|---|---|
| - | Internal interpolation axis name | | | | POWER ON |
| N01 | | | | CTDE | STRING |
| - | 32 | | - | - | 3/2 |

| 12714 | AXCT_AXCONF_ASSIGN_TAB14 | | | | B3 |
|---|---|---|---|---|---|
| - | Internal interpolation axis name | | | | POWER ON |
| N01 | | | | CTDE | STRING |
| - | 32 | | - | - | 3/2 |

| 12715 | AXCT_AXCONF_ASSIGN_TAB15 | | | | B3 |
|---|---|---|---|---|---|
| - | Internal interpolation axis name | | | | POWER ON |
| N01 | | | | CTDE | STRING |
| - | 32 | | - | - | 3/2 |

| 12716 | AXCT_AXCONF_ASSIGN_TAB16 | | | | B3 |
|---|---|---|---|---|---|
| - | Internal interpolation axis name | | | | POWER ON |
| N01 | | | | CTDE | STRING |
| - | 32 | | - | - | 3/2 |

| 12750 | AXCT_NAME_TAB | | | | B3 |
|---|---|---|---|---|---|
| - | Identifier of an axis container | | | | POWER ON |
| N01 | | | | CTDE | STRING |
| - | 16 | "CT1","CT2","CT3","CT4","CT5","CT6"... | - | - | 1/1 |

| 12970 | PLC_DIG_IN_LOGIC_ADDRESS | | | | - |
|---|---|---|---|---|---|
| - | Logical start address of digital PLC input addresses | | | | POWER ON |
| N10 | | | | - | DWORD |
| - | - | 0 | 0 | 1023 | 0/0 |

© Siemens AG 2004 All Rights Reserved

| 12971 | PLC_DIG_IN_NUM | | | | - |
|---|---|---|---|---|---|
| - | Number of digital input addresses | | | | POWER ON |
| N10 | | | | - | DWORD |
| - | - | 64 | 1 | 1023 | 0/0 |

| 12974 | PLC_DIG_OUT_LOGIC_ADDRESS | | | | - |
|---|---|---|---|---|---|
| - | Logical start address of PLC digital output addresses | | | | POWER ON |
| N10 | | | | - | DWORD |
| - | - | 0 | 0 | 1023 | 0/0 |

| 12975 | PLC_DIG_OUT_NUM | | | | - |
|---|---|---|---|---|---|
| - | Number of digital output addresses | | | | POWER ON |
| N10 | | | | - | DWORD |
| - | - | 48 | 1 | 1023 | 0/0 |

| 12978 | PLC_ANA_IN_LOGIC_ADDRESS | | | | - |
|---|---|---|---|---|---|
| - | Logical start address of PLC analog input addresses | | | | POWER ON |
| N10 | | | | - | DWORD |
| - | - | 0 | 0 | 1023 | 0/0 |

| 12979 | PLC_ANA_IN_NUM | | | | - |
|---|---|---|---|---|---|
| - | Number of analog input addresses | | | | POWER ON |
| N10 | | | | - | DWORD |
| - | - | 0 | 0 | 1023 | 0/0 |

| 12982 | PLC_ANA_OUT_LOGIC_ADDRESS | | | | - |
|---|---|---|---|---|---|
| - | Logical start address of PLC analog output addresses | | | | POWER ON |
| N10 | | | | - | DWORD |
| - | - | 0 | 0 | 1023 | 0/0 |

| 12983 | PLC_ANA_OUT_NUM | | | | - |
|---|---|---|---|---|---|
| - | Number of analog output addresses | | | | POWER ON |
| N10 | | | | - | DWORD |
| - | - | 0 | 0 | 1023 | 0/0 |

© Siemens AG 2004 All Rights Reserved

## 2.5.3 Central drive data

| | | | | | |
|---|---|---|---|---|---|
| **13000** | **DRIVE_IS_ACTIVE** | | | | G2 |
| - | Drive activation (611D) | | | | POWER ON |
| EXP | | | | - | BOOLEAN |
| - | 31 | FALSE,FALSE,FALSE,FALSE,FALSE,FALSE... | - | - | 7/2 |

| | | | | | |
|---|---|---|---|---|---|
| **13010** | **DRIVE_LOGIC_NR** | | | | G2 |
| - | Logical drive number | | | | POWER ON |
| EXP | | | | - | BYTE |
| - | 31 | 0,0,0,0,0,0,0,0,0,0,0,0,0,0,0,0,0,0,0,0,0,0,0,0,0,0,0,0,0,0,0,0... | 0 | 31 | 7/2 |
| 810d | - | 1,2,3,4,5,6 | - | - | -/- |

| | | | | | |
|---|---|---|---|---|---|
| **13020** | **DRIVE_INVERTER_CODE** | | | | G2 |
| - | Power section code of drive module | | | | POWER ON |
| EXP | | | | - | DWORD |
| - | 31 | 0,0,0,0,0,0,0,0,0,0,0,0,0,0,0,0,0,0,0,0,0,0,0,0,0,0,0,0,0,0,0,0... | - | - | 7/2 |
| 810d | - | 0xE,0x13,0x13 | - | - | -/- |

| | | | | | |
|---|---|---|---|---|---|
| **13030** | **DRIVE_MODULE_TYPE** | | | | G2 |
| - | Module ID | | | | POWER ON |
| EXP | | | | - | BYTE |
| - | 31 | 1,1,1,1,1,1,1,1,1,1,1,1,1,1,1,1,1,1,1,1,1,1,1,1,1,1,1,1,1,1,1,1... | 0 | 9 | 7/2 |
| 810d | - | 6,6,6,6,6,6 | - | - | -/- |

| | | | | | |
|---|---|---|---|---|---|
| **13040** | **DRIVE_TYPE** | | | | G2,FBHY |
| - | ID for drive type (1: FDD, 2: MSD, 3: LIN) | | | | POWER ON |
| EXP | | | | - | BYTE |
| - | 31 | 1,1,1,1,1,1,1,1,1,1,1,1,1,1,1,1,1,1,1,1,1,1,1,1,1,1,1,1,1,1,1,1... | 0 | 5 | 7/2 |
| 810d | - | 2 | - | - | -/- |

© Siemens AG 2004 All Rights Reserved

| | | | | | |
|---|---|---|---|---|---|
| **13050** | **DRIVE_LOGIC_ADDRESS** | | | | G2 |
| - | Logical drive addresses | | | | POWER ON |
| N04, N10 | | | | - | DWORD |
| - | 31 | 272,292,312,332,352,372,392,412,432... | 258 | 8191 | 7/2 |

| | | | | | |
|---|---|---|---|---|---|
| **13060** | **DRIVE_TELEGRAM_TYPE** | | | | G2 |
| - | Standard message frame type for Profibus DP | | | | POWER ON |
| N04, N10 | | | | - | DWORD |
| - | 31 | 102,102,102,102,102,102,102,102,102... | - | - | 7/2 |

| | | | | | |
|---|---|---|---|---|---|
| **13070** | **DRIVE_FUNCTION_MASK** | | | | G2 |
| - | DP functions used | | | | POWER ON |
| N04, N10 | | | | - | DWORD |
| - | 31 | 0,0,0,0,0,0,0,0,0,0,0,0,0,0,0,0,0,0,0,0,0,0,0,0,0,0,0,0,0,0,0,0... | - | - | 7/2 |

| | | | | | |
|---|---|---|---|---|---|
| **13080** | **DRIVE_TYPE_DP** | | | | G2 |
| - | Drive type Profibus | | | | POWER ON |
| EXP | | | | - | BYTE |
| - | 31 | 0,0,0,0,0,0,0,0,0,0,0,0,0,0,0,0,0,0,0,0,0,0,0,0,0,0,0,0,0,0,0,0... | 0 | 4 | 7/2 |

| | | | | | |
|---|---|---|---|---|---|
| **13100** | **DRIVE_DIAGNOSIS** | | | | IAD,Kap.3 |
| - | Diagnosis drive link | | | | POWER ON |
| EXP, N05 | | | | - | DWORD |
| - | 9 | 0,0,0,0,0,0,1,0,0 | - | - | 7/2 |

| | | | | | |
|---|---|---|---|---|---|
| **13200** | **MEAS_PROBE_LOW_ACTIVE** | | | | M5 |
| - | Polarity reversal of sensor | | | | POWER ON |
| N10, N09 | | | | - | BOOLEAN |
| - | 2 | FALSE,FALSE | - | - | 7/2 |

© Siemens AG 2004 All Rights Reserved

| | | | | | |
|---|---|---|---|---|---|
| **13210** | **MEAS_TYPE** | | | | M5 |
| - | Meas. type with decentralized drives | | | | POWER ON |
| N10, N09 | | | | - | BYTE |
| - | - | 1 | 0 | 1 | 7/2 |
| 810d | - | - | - | - | 0/0 |
| 840d-2a2c | - | 0 | - | - | -/- |
| 840d-4a1cg | - | 0 | - | - | -/- |
| 840d-6a2c | - | 0 | - | - | -/- |
| 840d-12a2c | - | 0 | - | - | -/- |
| 840d-31a10c | - | 0 | - | - | -/- |
| 840di-basic | - | 0 | - | - | -/- |
| 840di-universal | - | 0 | - | - | -/- |
| 840di-plus | - | 0 | - | - | -/- |

| | | | | | |
|---|---|---|---|---|---|
| **13220** | **MEAS_PROBE_DELAY_TIME** | | | | FBA/IAD |
| s | Probe delay time until recognition | | | | POWER ON |
| N10, N09 | | | | - | DOUBLE |
| - | 2 | 0.0,0.0 | 0 | 0.1 | 7/2 |

| | | | | | |
|---|---|---|---|---|---|
| **13300** | **PROFISAFE_IN_FILTER** | | | | - |
| - | Useful F data filter IN | | | | POWER ON |
| N01, N06 | | | | - | DWORD |
| - | 16 | 0xFFFFFFFF,0xFFFFFFFF,0xFFFFFFFF... | - | - | 7/2 |
| 840di-basic | - | - | - | - | -1/- |
| 840di-universal | - | - | - | - | -1/- |
| 840di-plus | - | - | - | - | -1/- |

| | | | | | |
|---|---|---|---|---|---|
| **13301** | **PROFISAFE_OUT_FILTER** | | | | - |
| - | Useful F data filter OUT | | | | POWER ON |
| N01, N06 | | | | - | DWORD |
| - | 16 | 0xFFFFFFFF,0xFFFFFFFF,0xFFFFFFFF... | - | - | 7/2 |
| 840di-basic | - | - | - | - | -1/- |
| 840di-universal | - | - | - | - | -1/- |
| 840di-plus | - | - | - | - | -1/- |

© Siemens AG 2004 All Rights Reserved

| | | | | | |
|---|---|---|---|---|---|
| **14504** | **MAXNUM_USER_DATA_INT** | | | | P3 |
| - | Number of user data (INT) | | | | POWER ON |
| N03 | | | | - | DWORD |
| - | - | 0 | 0 | 256 | 7/2 |

| | | | | | |
|---|---|---|---|---|---|
| **14506** | **MAXNUM_USER_DATA_HEX** | | | | A2,P3 |
| - | Number of user data (HEX) | | | | POWER ON |
| N03 | | | | - | DWORD |
| - | - | 0 | 0 | 256 | 7/2 |

| | | | | | |
|---|---|---|---|---|---|
| **14508** | **MAXNUM_USER_DATA_FLOAT** | | | | A2,P3 |
| - | Number of user data (FLOAT) | | | | POWER ON |
| N03 | | | | - | DWORD |
| - | - | 0 | 0 | 32 | 7/2 |

| | | | | | |
|---|---|---|---|---|---|
| **14510** | **USER_DATA_INT** | | | | A2,P3 |
| - | User data (INT) | | | | POWER ON |
| N03 | | | | - | DWORD |
| - | 256 | 0,0,0,0,0,0,0,0,0,0,0,0,<br>0,0,0,0,0,0,0,0,0,0,0,0,<br>0,0... | -32768 | 32767 | 7/2 |

| | | | | | |
|---|---|---|---|---|---|
| **14512** | **USER_DATA_HEX** | | | | A2,P3 |
| - | User data (HEX) | | | | POWER ON |
| N03 | | | | - | DWORD |
| - | 256 | 0,0,0,0,0,0,0,0,0,0,0,0,<br>0,0,0,0,0,0,0,0,0,0,0,0,<br>0,0... | 0 | 0x0FF | 7/2 |

| | | | | | |
|---|---|---|---|---|---|
| **14514** | **USER_DATA_FLOAT** | | | | A2,P3 |
| - | User data (FLOAT) | | | | POWER ON |
| N03 | | | | - | DOUBLE |
| - | 32 | 0.0,0.0,0.0,0.0,0.0,0.0,<br>0.0,0.0,0.0... | -3.40e38 | 3.40e38 | 7/2 |

| | | | | | |
|---|---|---|---|---|---|
| **14516** | **USER_DATA_PLC_ALARM** | | | | A2,P3 |
| - | User data (HEX) | | | | POWER ON |
| N03 | | | | - | BYTE |
| - | 64 | 0,0,0,0,0,0,0,0,0,0,0,0,<br>0,0,0,0,0,0,0,0,0,0,0,0,<br>0,0... | - | - | 0/0 |

© Siemens AG 2004 All Rights Reserved

| 15700 | LANG_SUB_NAME | | | | - |
|---|---|---|---|---|---|
| - | Name of subroutine for substitution | | | | POWER ON |
| N01 | | | | - | STRING |
| - | -1 | | - | - | 7/2 |

| 15702 | LANG_SUB_PATH | | | | - |
|---|---|---|---|---|---|
| - | path of subroutine for substitution | | | | POWER ON |
| N01 | | | | - | BYTE |
| - | - | 0 | 0 | 2 | 7/2 |

| 17200 | GMMC_INFO_NO_UNIT | | | | K1 |
|---|---|---|---|---|---|
| - | Global MMC information (without phys. unit) | | | | POWER ON |
| EXP | | | | - | DOUBLE |
| - | 16 | 3.,4.,3.,1.,0.,0.,0.,0.,0.,0.,0.,0.,0.,0.,0.... | - | - | 0/7 |

| 17201 | GMMC_INFO_NO_UNIT_STATUS | | | | K1 |
|---|---|---|---|---|---|
| - | Global MMC status info (without phys. unit) | | | | POWER ON |
| EXP | | | | - | BYTE |
| - | 16 | 1,1,1,1,0,0,0,0,0,0,0,0,0,0,0,0 | - | - | 0/7 |

| 17500 | MAXNUM_REPLACEMENT_TOOLS | | | | FBW |
|---|---|---|---|---|---|
| - | Maximal number of replacement tools. | | | | POWER ON |
| N09 | | | | - | DWORD |
| - | - | 0 | 0 | 32 | 7/2 |

| 17510 | TOOL_UNLOAD_MASK | | | | FBW |
|---|---|---|---|---|---|
| - | Behavior of tool data when unloading | | | | POWER ON |
| N09 | | | | - | DWORD |
| - | - | 0 | 0 | 0xF | 7/2 |

| 17520 | TOOL_DEFAULT_DATA_MASK | | | | FBW |
|---|---|---|---|---|---|
| - | Create new tool: default settings | | | | POWER ON |
| N09 | | | | - | DWORD |
| - | - | 0 | 0 | 0x1F | 7/2 |

| 17530 | TOOL_DATA_CHANGE_COUNTER | | | | FBW |
|---|---|---|---|---|---|
| - | Mark tool data change for HMI | | | | POWER ON |
| EXP, N01 | | | | - | DWORD |
| - | - | 0 | 0 | 0xF | 7/2 |

© Siemens AG 2004 All Rights Reserved

| | | | | | |
|---|---|---|---|---|---|
| **17540** | **TOOLTYPES_ALLOWED** | | | | - |
| - | allowed tool types | | | | POWER ON |
| N09 | | | | - | DWORD |
| - | - | 0x3FF | 0 | 0x3FF | 7/2 |
| 840d-4a1cg | - | 0x10 | - | - | -1/0 |

| | | | | | |
|---|---|---|---|---|---|
| **17600** | **DEPTH_OF_LOGFILE_OPT** | | | | - |
| - | Depth of log memory optimization in REORG | | | | RESET |
| EXP, N01 | | | | - | DWORD |
| - | - | 5 | 0 | 300 | 3/3 |

| | | | | | |
|---|---|---|---|---|---|
| **17900** | **VDI_FUNCTION_MASK** | | | | - |
| - | to be defined | | | | POWER ON |
| EXP, N09 | | | | - | DWORD |
| - | - | 0x0 | 0 | 0x1 | 7/2 |

## 2.5.4 Central drive data

| | | | | | |
|---|---|---|---|---|---|
| **18000** | **VDI_UPDATE_IN_ONE_IPO_CYCLE** | | | | P3 |
| - | PLC interface update | | | | POWER ON |
| EXP, N01 | | | | - | BOOLEAN |
| - | - | FALSE | - | - | 0/0 |

| | | | | | |
|---|---|---|---|---|---|
| **18040** | **VERSION_INFO** | | | | IAD |
| - | Version and possibly data of the PCMCIA card, not FM-NC | | | | POWER ON |
| N05 | | | | READ | STRING |

| | | | | | |
|---|---|---|---|---|---|
| **18050** | **INFO_FREE_MEM_DYNAMIC** | | | | S7 |
| - | Display data of free dynamic memory | | | | POWER ON |
| N01, N02, N05 | | | | READ | DWORD |
| - | - | 430080 | - | - | 7/2 |
| 810d | - | 1048576 | - | - | -/- |
| 840di-basic | - | 1048576 | - | - | -/- |
| 840di-universal | - | 1048576 | - | - | -/- |
| 840di-plus | - | 1048576 | - | - | -/- |

© Siemens AG 2004 All Rights Reserved

| 18060 | INFO_FREE_MEM_STATIC | | | | S7 |
|---|---|---|---|---|---|
| - | Display data of free static memory | | | | POWER ON |
| N01, N02, N05 | | | | READ | DWORD |
| - | - | 262144 | - | - | 7/2 |
| 810d | - | 524288 | - | - | -/- |
| 840d-2a2c | - | 2621440 | - | - | -/- |
| 840d-4a1cg | - | 2621440 | - | - | -/- |
| 840d-6a2c | - | 2621440 | - | - | -/- |
| 840d-12a2c | - | 2621440 | - | - | -/- |
| 840d-31a10c | - | 2621440 | - | - | -/- |
| 840di-basic | - | 524288 | - | - | -/- |
| 840di-universal | - | 524288 | - | - | -/- |
| 840di-plus | - | 524288 | - | - | -/- |

| 18070 | INFO_FREE_MEM_DPR | | | | S7 |
|---|---|---|---|---|---|
| - | Display data of free memory in DUAL PORT RAM | | | | POWER ON |
| EXP, N01, N02, N05 | | | | READ | DWORD |
| - | - | 0 | - | - | 7/2 |

| 18072 | INFO_FREE_MEM_CC_MD | | | | - |
|---|---|---|---|---|---|
| - | Display of free memory in CC-MD memory | | | | POWER ON |
| EXP, N01, N05 | | | | READ | DWORD |
| - | - | 0 | - | - | 0/0 |

| 18080 | MM_TOOL_MANAGEMENT_MASK | | | | FBW |
|---|---|---|---|---|---|
| - | Step-by-step memory reservation for tool management (SRAM) | | | | POWER ON |
| N02, N09 | | | | - | DWORD |
| - | - | 0x0 | 0 | 0xFFFF | 7/1 |

| 18082 | MM_NUM_TOOL | | | | FBW,S7 |
|---|---|---|---|---|---|
| - | Number of tools the NCK can manage (SRAM) | | | | POWER ON |
| N02, N09 | | | | - | DWORD |
| - | - | 30 | 0 | 600 | 7/2 |

| 18084 | MM_NUM_MAGAZINE | | | | FBW |
|---|---|---|---|---|---|
| - | Number of magazines the NCK can manage (SRAM) | | | | POWER ON |
| N02, N09 | | | | - | DWORD |
| - | - | 3 | 0 | 32 | 7/2 |

© Siemens AG 2004 All Rights Reserved

| 18086 | MM_NUM_MAGAZINE_LOCATION | | | | FBW |
|---|---|---|---|---|---|
| - | Number of magazine locations the NCK can manage (SRAM) | | | | POWER ON |
| N02, N09 | | | | - | DWORD |
| - | - | 30 | 0 | 600 | 7/2 |

| 18088 | MM_NUM_TOOL_CARRIER | | | | W1 |
|---|---|---|---|---|---|
| - | Maximum number of definable toolholders | | | | POWER ON |
| N02, N09 | | | | - | DWORD |
| - | - | 0 | 0 | 99999999 | 7/2 |

| 18090 | MM_NUM_CC_MAGAZINE_PARAM | | | | FBW |
|---|---|---|---|---|---|
| - | Number of magazine data generated and evaluated by the CC (SRAM) | | | | POWER ON |
| N02, N09 | | | | - | DWORD |
| - | - | 0 | 0 | 10 | 2/2 |

| 18091 | MM_TYPE_CC_MAGAZINE_PARAM | | | | FBW |
|---|---|---|---|---|---|
| - | Type of OEM magazine data (SRAM) | | | | POWER ON |
| N02, N09 | | | | - | DWORD |
| - | 10 | 3,3,3,3,3,3,3,3,3,3 | 1 | 6 | 2/2 |

| 18092 | MM_NUM_CC_MAGLOC_PARAM | | | | FBW |
|---|---|---|---|---|---|
| - | Number of magazine location data generated and eval. by the CC | | | | POWER ON |
| N02, N09 | | | | - | DWORD |
| - | - | 0 | 0 | 10 | 2/2 |

| 18093 | MM_TYPE_CC_MAGLOC_PARAM | | | | FBW |
|---|---|---|---|---|---|
| - | Type of OEM magazine location data (SRAM) | | | | POWER ON |
| N02, N09 | | | | - | DWORD |
| - | 10 | 3,3,3,3,3,3,3,3,3,3 | 1 | 6 | 2/2 |

| 18094 | MM_NUM_CC_TDA_PARAM | | | | FBW |
|---|---|---|---|---|---|
| - | Number of OEM tool data (SRAM) | | | | POWER ON |
| N02, N09 | | | | - | DWORD |
| - | - | 0 | 0 | 10 | 2/2 |

| 18095 | MM_TYPE_CC_TDA_PARAM | | | | FBW |
|---|---|---|---|---|---|
| - | Type of OEM tool data (SRAM) | | | | POWER ON |
| N02, N09 | | | | - | DWORD |
| - | 10 | 4,4,4,4,4,4,4,4,4,4 | 1 | 6 | 2/2 |

© Siemens AG 2004 All Rights Reserved

| 18096 | MM_NUM_CC_TOA_PARAM | | | | FBW |
|---|---|---|---|---|---|
| - | Number of data per tool edge for OEM and compile cycle (SRAM) | | | | POWER ON |
| N02, N09 | | | | - | DWORD |
| - | - | 0 | 0 | 10 | 2/2 |

| 18097 | MM_TYPE_CC_TOA_PARAM | | | | - |
|---|---|---|---|---|---|
| - | Type of OEM data per cutting edge (SRAM) | | | | POWER ON |
| N02, N09 | | | | - | DWORD |
| - | 10 | 4,4,4,4,4,4,4,4,4,4 | 1 | 6 | 2/2 |

| 18098 | MM_NUM_CC_MON_PARAM | | | | FBW |
|---|---|---|---|---|---|
| - | Number of monitoring data per tool edge for OEM and comp. cycle | | | | POWER ON |
| N02, N09 | | | | - | DWORD |
| - | - | 0 | 0 | 10 | 2/2 |

| 18099 | MM_TYPE_CC_MON_PARAM | | | | FBW |
|---|---|---|---|---|---|
| - | Type of OEM monitor data (SRAM) | | | | POWER ON |
| N02, N09 | | | | - | DWORD |
| - | 10 | 3,3,3,3,3,3,3,3,3,3 | 1 | 6 | 2/2 |

| 18100 | MM_NUM_CUTTING_EDGES_IN_TOA | | | | S7 |
|---|---|---|---|---|---|
| - | Tool offsets in TO-area (SRAM) | | | | POWER ON |
| N02, N09 | | | | - | DWORD |
| - | - | 30 | 0 | 1500 | 7/2 |

| 18102 | MM_TYPE_OF_CUTTING_EDGE | | | | W1 |
|---|---|---|---|---|---|
| - | Type of D No. programming (SRAM) | | | | POWER ON |
| N02, N09 | | | | - | DWORD |
| - | - | 0 | 0 | 1 | 7/2 |

| 18104 | MM_NUM_TOOL_ADAPTER | | | | FBW |
|---|---|---|---|---|---|
| - | Tool adapters in TO area (SRAM) | | | | POWER ON |
| N02, N09 | | | | - | DWORD |
| - | - | -1 | -1 | 600 | 7/2 |

| 18105 | MM_MAX_CUTTING_EDGE_NO | | | | W1 |
|---|---|---|---|---|---|
| - | Max. value of D No. (DRAM) | | | | POWER ON |
| N02, N09 | | | | - | DWORD |
| - | - | 9 | 1 | 32000 | 7/2 |

© Siemens AG 2004 All Rights Reserved

| 18106 | MM_MAX_CUTTING_EDGE_PERTOOL | | | | W1 |
|---|---|---|---|---|---|
| - | Max. number of D Nos. per tool | | | | POWER ON |
| N02, N09 | | | | - | DWORD |
| - | - | 9 | 1 | 12 | 7/2 |

| 18108 | MM_NUM_SUMCORR | | | | W1 |
|---|---|---|---|---|---|
| - | Resulting offsets in TO area (SRAM) | | | | POWER ON |
| N02, N09 | | | | - | DWORD |
| - | - | -1 | -1 | 9000 | 7/2 |

| 18110 | MM_MAX_SUMCORR_PER_CUTTEDGE | | | | S7 |
|---|---|---|---|---|---|
| - | Number of TOA blocks (SRAM) | | | | POWER ON |
| N02, N09 | | | | - | DWORD |
| - | - | 1 | 1 | 6 | 7/2 |

| 18112 | MM_KIND_OF_SUMCORR | | | | W1 |
|---|---|---|---|---|---|
| - | Properties of resulting offsets in TO area (SRAM) | | | | POWER ON |
| N02, N09 | | | | - | DWORD |
| - | - | 0 | 0 | 0x1F | 7/2 |

| 18114 | MM_ENABLE_TOOL_ORIENT | | | | W1 |
|---|---|---|---|---|---|
| - | Assign tool cutting edge orientation | | | | POWER ON |
| N02, N09 | | | | - | DWORD |
| - | - | 0 | 0 | 3 | 7/2 |

| 18116 | MM_NUM_TOOL_ENV | | | | S7 |
|---|---|---|---|---|---|
| - | number of tool environments in TO-area (SRAM) | | | | POWER ON |
| N02, N09 | | | | - | DWORD |
| - | - | 0 | - | - | 7/2 |

| 18118 | MM_NUM_GUD_MODULES | | | | S7 |
|---|---|---|---|---|---|
| - | Number of GUD files in active file system (SRAM) | | | | POWER ON |
| N02 | | | | - | DWORD |
| - | - | 7 | 1 | 9 | 7/2 |

© Siemens AG 2004 All Rights Reserved

| | | | | | |
|---|---|---|---|---|---|
| **18120** | **MM_NUM_GUD_NAMES_NCK** | | | | S7 |
| - | Number of global user variables (SRAM) | | | | POWER ON |
| N02 | | | | - | DWORD |
| - | - | 50 | - | - | 7/2 |
| 810d | - | 10 | - | - | -/- |
| 840d-2a2c | - | 10 | - | - | -/- |
| 840d-4a1cg | - | 10 | - | - | -/- |
| 840d-6a2c | - | 10 | - | - | -/- |
| 840d-12a2c | - | 10 | - | - | -/- |
| 840d-31a10c | - | 10 | - | - | -/- |

| | | | | | |
|---|---|---|---|---|---|
| **18130** | **MM_NUM_GUD_NAMES_CHAN** | | | | S7 |
| - | Number of channel-specific user variables (SRAM) | | | | POWER ON |
| N02 | | | | - | DWORD |
| - | - | 100 | - | - | 7/2 |
| 810d | - | 40 | - | - | -/- |
| 840d-2a2c | - | 40 | - | - | -/- |
| 840d-4a1cg | - | 40 | - | - | -/- |
| 840d-6a2c | - | 40 | - | - | -/- |
| 840d-12a2c | - | 40 | - | - | -/- |
| 840d-31a10c | - | 40 | - | - | -/- |

| | | | | | |
|---|---|---|---|---|---|
| **18150** | **MM_GUD_VALUES_MEM** | | | | S7 |
| - | Memory location for user variables (SRAM) | | | | POWER ON |
| N02 | | | | - | DWORD |
| - | - | 32 | - | - | 7/2 |
| 810d | - | 16 | - | - | -/- |
| 840d-2a2c | - | 16 | - | - | -/- |
| 840d-4a1cg | - | 16 | - | - | -/- |
| 840d-6a2c | - | 16 | - | - | -/- |
| 840d-12a2c | - | 16 | - | - | -/- |
| 840d-31a10c | - | 16 | - | - | -/- |

© Siemens AG 2004 All Rights Reserved

| 18160 | MM_NUM_USER_MACROS | | | | S7 |
|---|---|---|---|---|---|
| - | Number of macros (SRAM) | | | | POWER ON |
| N02 | | | | - | DWORD |
| - | - | 50 | - | - | 7/2 |
| 810d | - | 10 | - | - | -/- |
| 840d-2a2c | - | 10 | - | - | -/- |
| 840d-4a1cg | - | 10 | - | - | -/- |
| 840d-6a2c | - | 10 | - | - | -/- |
| 840d-12a2c | - | 10 | - | - | -/- |
| 840d-31a10c | - | 10 | - | - | -/- |

| 18170 | MM_NUM_MAX_FUNC_NAMES | | | | S7 |
|---|---|---|---|---|---|
| - | Number of miscellaneous functions (cycles, DRAM) | | | | POWER ON |
| N02 | | | | - | DWORD |
| - | - | 100 | - | - | 7/2 |
| 810d | - | 40 | - | - | -/- |
| 840d-2a2c | - | 40 | - | - | -/- |
| 840d-4a1cg | - | 40 | - | - | -/- |
| 840d-6a2c | - | 40 | - | - | -/- |
| 840d-12a2c | - | 40 | - | - | -/- |
| 840d-31a10c | - | 40 | - | - | -/- |

| 18180 | MM_NUM_MAX_FUNC_PARAM | | | | S7 |
|---|---|---|---|---|---|
| - | Number of additional parameters for cycles acc. to MD 18170 | | | | POWER ON |
| N02 | | | | - | DWORD |
| - | - | 600 | - | - | 7/2 |
| 810d | - | 300 | - | - | -/- |
| 840d-2a2c | - | 300 | - | - | -/- |
| 840d-4a1cg | - | 300 | - | - | -/- |
| 840d-6a2c | - | 300 | - | - | -/- |
| 840d-12a2c | - | 300 | - | - | -/- |
| 840d-31a10c | - | 300 | - | - | -/- |

© Siemens AG 2004 All Rights Reserved

| 18190 | MM_NUM_PROTECT_AREA_NCK | | | | S7 |
|---|---|---|---|---|---|
| - | Number of files for machine-related protection zones (SRAM) | | | | POWER ON |
| N12, N02, N06, N09 | | | | - | DWORD |
| - | - | 0 | 0 | 10 | 7/2 |

| 18200 | MM_NUM_CCS_MAGAZINE_PARAM | | | | FBW |
|---|---|---|---|---|---|
| - | Number of Siemens OEM magazine data (SRAM) | | | | POWER ON |
| N02, N09 | | | | - | DWORD |
| - | - | 0 | 0 | 10 | 2/2 |

| 18201 | MM_TYPE_CCS_MAGAZINE_PARAM | | | | FBW |
|---|---|---|---|---|---|
| - | Type of Siemens OEM magazine data (SRAM) | | | | POWER ON |
| N02, N09 | | | | - | DWORD |
| - | 10 | 3,3,3,3,3,3,3,3,3,3 | 1 | 6 | 2/2 |

| 18202 | MM_NUM_CCS_MAGLOC_PARAM | | | | FBW |
|---|---|---|---|---|---|
| - | No. of Siemens OEM magazine location data (SRAM) | | | | POWER ON |
| N02, N09 | | | | - | DWORD |
| - | - | 0 | 0 | 10 | 2/2 |

| 18203 | MM_TYPE_CCS_MAGLOC_PARAM | | | | FBW |
|---|---|---|---|---|---|
| - | Type of Siemens OEM magazine location data (SRAM) | | | | POWER ON |
| N02, N09 | | | | - | DWORD |
| - | 10 | 3,3,3,3,3,3,3,3,3,3 | 1 | 6 | 2/2 |

| 18204 | MM_NUM_CCS_TDA_PARAM | | | | FBW |
|---|---|---|---|---|---|
| - | Number of Siemens OEM tool data (SRAM) | | | | POWER ON |
| N02, N09 | | | | - | DWORD |
| - | - | 0 | 0 | 10 | 2/2 |

| 18205 | MM_TYPE_CCS_TDA_PARAM | | | | FBW |
|---|---|---|---|---|---|
| - | Type of Siemens OEM tool data (SRAM) | | | | POWER ON |
| N02, N09 | | | | - | DWORD |
| - | 10 | 4,4,4,4,4,4,4,4,4,4 | 1 | 6 | 2/2 |

| 18206 | MM_NUM_CCS_TOA_PARAM | | | | FBW |
|---|---|---|---|---|---|
| - | No. of Siemens OEM data per cutting edge (SRAM) | | | | POWER ON |
| N02, N09 | | | | - | DWORD |
| - | - | 0 | 0 | 10 | 2/2 |

© Siemens AG 2004 All Rights Reserved

| 18207 | MM_TYPE_CCS_TOA_PARAM | | | | FBW |
|---|---|---|---|---|---|
| - | Type of Siemens OEM data per cutting edge (SRAM) | | | | POWER ON |
| N02, N09 | | | | - | DWORD |
| - | 10 | 4,4,4,4,4,4,4,4,4,4 | 1 | 6 | 2/2 |

| 18208 | MM_NUM_CCS_MON_PARAM | | | | FBW |
|---|---|---|---|---|---|
| - | No. of Siemens OEM monitor data (SRAM) | | | | POWER ON |
| N02, N09 | | | | - | DWORD |
| - | - | 0 | 0 | 10 | 2/2 |

| 18209 | MM_TYPE_CCS_MON_PARAM | | | | FBW |
|---|---|---|---|---|---|
| - | Type of Siemens OEM monitor data (SRAM) | | | | POWER ON |
| N02, N09 | | | | - | DWORD |
| - | 10 | 3,3,3,3,3,3,3,3,3,3 | 1 | 6 | 2/2 |

| 18210 | MM_USER_MEM_DYNAMIC | | | | S7 |
|---|---|---|---|---|---|
| - | Dynamic user memory in the DRAM | | | | POWER ON |
| EXP, N02 | | | | - | DWORD |
| - | - | 3000 | - | - | 7/2 |

| 18220 | MM_USER_MEM_DPR | | | | S7 |
|---|---|---|---|---|---|
| - | User memory in DUAL PORT RAM (DPR) | | | | POWER ON |
| EXP, N02 | | | | - | DWORD |
| - | - | 0 | - | - | 0/0 |

| 18230 | MM_USER_MEM_BUFFERED | | | | S7 |
|---|---|---|---|---|---|
| - | User memory in SRAM | | | | POWER ON |
| N02 | | | | - | DWORD |
| - | - | 280 | - | - | 7/1 |

| 18238 | MM_CC_MD_MEM_SIZE | | | | - |
|---|---|---|---|---|---|
| - | CC-MD in SRAM [kB] | | | | POWER ON |
| N02 | | | | - | DWORD |
| - | - | 1 | 1 | - | 7/1 |

© Siemens AG 2004 All Rights Reserved

| 18240 | MM_LUD_HASH_TABLE_SIZE | | | | S7 |
|---|---|---|---|---|---|
| - | Hash table size for user variables (DRAM) | | | | POWER ON |
| EXP, N02 | | | | - | DWORD |
| - | - | 37 | 11 | 107 | 0/0 |
| 810d | - | 11 | - | - | -/- |
| 840d-2a2c | - | 11 | - | - | -/- |
| 840d-4a1cg | - | 11 | - | - | -/- |
| 840d-6a2c | - | 11 | - | - | -/- |
| 840d-12a2c | - | 11 | - | - | -/- |
| 840d-31a10c | - | 11 | - | - | -/- |

| 18242 | MM_MAX_SIZE_OF_LUD_VALUE | | | | S7 |
|---|---|---|---|---|---|
| - | memory page size for LUD/GUD values | | | | POWER ON |
| N02 | | | | - | DWORD |
| - | - | 920 | 920 | SLMAXVARBYTES | 0/0 |

| 18250 | MM_CHAN_HASH_TABLE_SIZE | | | | S7 |
|---|---|---|---|---|---|
| - | Hash table size for channel-specific data (DRAM) | | | | POWER ON |
| EXP, N02 | | | | - | DWORD |
| - | - | 23 | 3 | 193 | 0/0 |

| 18260 | MM_NCK_HASH_TABLE_SIZE | | | | S7 |
|---|---|---|---|---|---|
| - | Hash table size for global data (DRAM) | | | | POWER ON |
| EXP, N02 | | | | - | DWORD |
| - | - | 4001 | 537 | 4327 | 0/0 |

| 18270 | MM_NUM_SUBDIR_PER_DIR | | | | S7 |
|---|---|---|---|---|---|
| - | Number of subdirectories (SRAM) | | | | POWER ON |
| N02 | | | | - | DWORD |
| - | - | 30 | 24 | 250 | 7/1 |

| 18280 | MM_NUM_FILES_PER_DIR | | | | S7 |
|---|---|---|---|---|---|
| - | Number of files per directory (SRAM) | | | | POWER ON |
| N02 | | | | - | DWORD |
| - | - | 100 | 64 | 512 | 7/1 |

© Siemens AG 2004 All Rights Reserved

| 18290 | MM_FILE_HASH_TABLE_SIZE | | | | S7 |
|---|---|---|---|---|---|
| - | Hash table size for files of a directory (SRAM) | | | | POWER ON |
| EXP, N02 | | | | - | DWORD |
| - | - | 47 | 3 | 299 | 0/0 |
| 810d | - | 19 | - | - | -/- |
| 840d-2a2c | - | 19 | - | - | -/- |
| 840d-4a1cg | - | 19 | - | - | -/- |
| 840d-6a2c | - | 19 | - | - | -/- |
| 840d-12a2c | - | 19 | - | - | -/- |
| 840d-31a10c | - | 19 | - | - | -/- |

| 18300 | MM_DIR_HASH_TABLE_SIZE | | | | S7 |
|---|---|---|---|---|---|
| - | Hash table size for subdirectories (SRAM) | | | | POWER ON |
| EXP, N02 | | | | - | DWORD |
| - | - | 11 | 3 | 349 | 0/0 |

| 18310 | MM_NUM_DIR_IN_FILESYSTEM | | | | S7 |
|---|---|---|---|---|---|
| - | Number of directories in passive file system (SRAM) | | | | POWER ON |
| N02 | | | | - | DWORD |
| - | - | 30 | 30 | 256 | 7/2 |

| 18320 | MM_NUM_FILES_IN_FILESYSTEM | | | | S7 |
|---|---|---|---|---|---|
| - | Number of files in passive file system (SRAM) | | | | POWER ON |
| N02 | | | | - | DWORD |
| - | - | 150 | 64 | 512 | 7/2 |

| 18331 | MM_FLASHFILESYS_MEM | | | | - |
|---|---|---|---|---|---|
| - | Reserved for FFS | | | | POWER ON |
| N01, N02 | | | | - | BYTE |
| - | 8 | 0,0,0,0,0,0,0,0 | - | - | 0/0 |

| 18332 | MM_FLASH_FILE_SYSTEM_SIZE | | | | IAD |
|---|---|---|---|---|---|
| - | Size of FFS | | | | POWER ON |
| N01, N02 | | | | - | DWORD |
| - | - | 0 | 0 | 4096 | 7/1 |

© Siemens AG 2004 All Rights Reserved

| | | | | | |
|---|---|---|---|---|---|
| **18342** | **MM_CEC_MAX_POINTS** | | | | K3 |
| - | Maximum number of interpolation points for sag comp. (SRAM) | | | | POWER ON |
| N01, N02 | | | | - | DWORD |
| - | 62 | 0,0,0,0,0,0,0,0,0,0,0,0, 0,0,0,0,0,0,0,0,0,0,0,0, 0,0... | 0 | 2000 | 7/2 |

| | | | | | |
|---|---|---|---|---|---|
| **18350** | **MM_USER_FILE_MEM_MINIMUM** | | | | S7 |
| - | Minimum part program memory (SRAM) | | | | POWER ON |
| EXP, N02 | | | | - | DWORD |
| - | - | 20 | 20 | 100 | 0/0 |

| | | | | | |
|---|---|---|---|---|---|
| **18351** | **MM_DRAM_FILE_MEM_SIZE** | | | | IAD |
| - | Size of part program memory (DRAM) | | | | POWER ON |
| EXP, N02 | | | | - | DWORD |
| - | - | 0 | 0 | 32768 | 7/1 |

| | | | | | |
|---|---|---|---|---|---|
| **18360** | **MM_EXT_PROG_BUFFER_SIZE** | | | | A2 |
| - | FIFO buffer size for processing from external source | | | | POWER ON |
| N01 | | | | - | DWORD |
| - | - | 50 | 30 | 1000000 | 7/2 |
| 810d | - | 30 | - | - | -/- |
| 840d-2a2c | - | 30 | - | - | -/- |
| 840d-4a1cg | - | 30 | - | - | -/- |
| 840d-6a2c | - | 30 | - | - | -/- |
| 840d-12a2c | - | 30 | - | - | -/- |
| 840d-31a10c | - | 30 | - | - | -/- |

| | | | | | |
|---|---|---|---|---|---|
| **18362** | **MM_EXT_PROG_NUM** | | | | A2 |
| - | Number of program levels which can be simultaneously processed | | | | POWER ON |
| N01 | | | | - | BYTE |
| - | - | 1 | 0 | 13 | 7/2 |

| | | | | | |
|---|---|---|---|---|---|
| **18370** | **MM_PROTOC_NUM_FILES** | | | | D1,OEM |
| - | Max.no. of log files in passive file system | | | | POWER ON |
| N02 | | | | - | DWORD |
| - | 10 | 2,0,0,0,0,2,2,0,0,0 | 0 | 10 | 1/1 |

© Siemens AG 2004 All Rights Reserved

| 18371 | MM_PROTOC_NUM_ETPD_STD_LIST | | | | D1,OEM |
|---|---|---|---|---|---|
| - | Number of standard data lists ETPD. | | | | POWER ON |
| N02 | | | | - | DWORD |
| - | 10 | 25,0,0,0,0,25,25,0,0,0 | 0 | 25 | 1/1 |

| 18372 | MM_PROTOC_NUM_ETPD_OEM_LIST | | | | D1,OEM |
|---|---|---|---|---|---|
| - | Number of OEM data lists ETPD. | | | | POWER ON |
| N02 | | | | - | DWORD |
| - | 10 | 0,0,0,0,0,0,0,0,0,0 | 0 | 20 | 1/1 |

| 18373 | MM_PROTOC_NUM_SERVO_DATA | | | | D1 |
|---|---|---|---|---|---|
| - | Number of servo data f. recording | | | | POWER ON |
| N02 | | | | - | DWORD |
| - | 10 | 0,0,0,0,0,10,10,0,0,0 | 0 | 10 | 1/1 |

| 18374 | MM_PROTOC_FILE_BUFFER_SIZE | | | | - |
|---|---|---|---|---|---|
| - | Size of log file buffer | | | | POWER ON |
| N02 | | | | - | DWORD |
| - | 10 | 8000,8000,8000,8000, 8000,8000,8000... | 5000 | 100000 | 1/1 |

| 18375 | MM_PROTOC_SESS_ENAB_USER | | | | - |
|---|---|---|---|---|---|
| - | Users enabled for sessions | | | | POWER ON |
| N02 | | | | - | BYTE |
| - | 10 | 0,0,0,0,0,1,1,0,0,0 | 0 | 1 | 1/1 |

| 18390 | MM_COM_COMPRESS_METHOD | | | | - |
|---|---|---|---|---|---|
| - | Supported compression methods. | | | | POWER ON |
| EXP, N01, N02 | | | | - | DWORD |
| - | - | 0x01 | - | - | 2/2 |

| 18400 | MM_NUM_CURVE_TABS | | | | M3 |
|---|---|---|---|---|---|
| - | No. of curve tables (SRAM) | | | | POWER ON |
| N02, N09 | | | | - | DWORD |
| - | - | 0 | - | - | 1/1 |

| 18402 | MM_NUM_CURVE_SEGMENTS | | | | M3 |
|---|---|---|---|---|---|
| - | No. of curve segments (SRAM) | | | | POWER ON |
| N02, N09 | | | | - | DWORD |
| - | - | 0 | - | - | 1/1 |

© Siemens AG 2004 All Rights Reserved

| 18404 | MM_NUM_CURVE_POLYNOMS | | | | M3 |
|---|---|---|---|---|---|
| - | No. of curve table polynomials (SRAM) | | | | POWER ON |
| N02, N09 | | | | - | DWORD |
| - | - | 0 | - | - | 1/1 |

| 18406 | MM_NUM_CURVE_TABS_DRAM | | | | M3 |
|---|---|---|---|---|---|
| - | No. of curve tables (DRAM) | | | | POWER ON |
| N02, N09 | | | | - | DWORD |
| - | - | 0 | - | - | 1/1 |

| 18408 | MM_NUM_CURVE_SEGMENTS_DRAM | | | | M3 |
|---|---|---|---|---|---|
| - | No. of curve segments (DRAM) | | | | POWER ON |
| N02, N09 | | | | - | DWORD |
| - | - | 0 | - | - | 1/1 |

| 18410 | MM_NUM_CURVE_POLYNOMS_DRAM | | | | M3 |
|---|---|---|---|---|---|
| - | No. of curve table polynomials (DRAM) | | | | POWER ON |
| N02, N09 | | | | - | DWORD |
| - | - | 0 | - | - | 1/1 |

| 18500 | MM_EXTCOM_TASK_STACK_SIZE | | | | S7 |
|---|---|---|---|---|---|
| - | Stack size for external communications task (DRAM) | | | | POWER ON |
| EXP, N02 | | | | - | DWORD |
| - | - | 19 | 10 | 60 | 0/0 |

| 18502 | MM_COM_TASK_STACK_SIZE | | | | - |
|---|---|---|---|---|---|
| - | Stack size in kb for communication (DRAM) | | | | POWER ON |
| EXP, N02 | | | | - | DWORD |
| - | - | 12 | 4 | 20 | 0/0 |

| 18510 | MM_SERVO_TASK_STACK_SIZE | | | | S7 |
|---|---|---|---|---|---|
| - | Stack size of servo task (DRAM) | | | | POWER ON |
| EXP, N02 | | | | - | DWORD |
| - | - | 8 | 4 | 20 | 0/0 |

| 18512 | MM_IPO_TASK_STACK_SIZE | | | | - |
|---|---|---|---|---|---|
| - | Stack size of Ipo task (DRAM) | | | | POWER ON |
| EXP, C02 | | | | - | DWORD |
| - | - | 12 | 12 | 40 | 0/0 |

© Siemens AG 2004 All Rights Reserved

| 18520 | MM_DRIVE_TASK_STACK_SIZE | | | | S7,ECO |
|---|---|---|---|---|---|
| - | Stack size of drive task (DRAM) | | | | POWER ON |
| EXP, N02 | | | | - | DWORD |
| - | - | 10 | 6 | 20 | 0/0 |

| 18540 | MM_PLC_TASK_STACK_SIZE | | | | - |
|---|---|---|---|---|---|
| - | Stack size of the PLC task (DRAM) | | | | POWER ON |
| EXP, N02 | | | | - | DWORD |
| - | - | 30 | 20 | 40 | 0/0 |

| 18600 | MM_FRAME_FINE_TRANS | | | | K2 |
|---|---|---|---|---|---|
| - | Fine offset with FRAME (SRAM) | | | | POWER ON |
| N02 | | | | - | DWORD |
| - | - | 1 | 0 | 1 | 7/2 |

| 18601 | MM_NUM_GLOBAL_USER_FRAMES | | | | K2 |
|---|---|---|---|---|---|
| - | Number of global predefined user frames (SRAM) | | | | POWER ON |
| N02 | | | | - | DWORD |
| - | - | 0 | 0 | 100 | 7/2 |

| 18602 | MM_NUM_GLOBAL_BASE_FRAMES | | | | K2 |
|---|---|---|---|---|---|
| - | Number of global base frames (SRAM) | | | | POWER ON |
| N02 | | | | - | DWORD |
| - | - | 0 | 0 | 16 | 7/2 |

| 18660 | MM_NUM_SYNACT_GUD_REAL | | | | - |
|---|---|---|---|---|---|
| - | to be defined | | | | POWER ON |
| N02 | | | | - | DWORD |
| - | 9 | 0,0,0,0,0,0,0,0,0 | - | - | 7/2 |

| 18661 | MM_NUM_SYNACT_GUD_INT | | | | - |
|---|---|---|---|---|---|
| - | to be defined | | | | POWER ON |
| N02 | | | | - | DWORD |
| - | 9 | 0,0,0,0,0,0,0,0,0 | - | - | 7/2 |

| 18662 | MM_NUM_SYNACT_GUD_BOOL | | | | - |
|---|---|---|---|---|---|
| - | to be defined | | | | POWER ON |
| N02 | | | | - | DWORD |
| - | 9 | 0,0,0,0,0,0,0,0,0 | - | - | 7/2 |

© Siemens AG 2004 All Rights Reserved

| 18700 | MM_SIZEOF_LINKVAR_DATA | | | | B3 |
|---|---|---|---|---|---|
| - | Size of NCU-link variable memory | | | | POWER ON |
| N02 | | | | LINK | DWORD |
| - | - | 0 | - | - | 7/2 |

| 18710 | MM_NUM_AN_TIMER | | | | - |
|---|---|---|---|---|---|
| - | Number of glob. time var. f. synchronized actions | | | | POWER ON |
| N02 | | | | - | DWORD |
| - | - | 0 | 0 | 10000 | 7/2 |

| 18720 | MM_SERVO_FIFO_SIZE | | | | B3 |
|---|---|---|---|---|---|
| - | Size of buffered command pos. (IPO-pos ctrl) | | | | POWER ON |
| EXP, N01 | | | | - | DWORD |
| - | - | 2 | 2 | 35 | 3/2 |

| 18780 | MM_NCU_LINK_MASK | | | | B3 |
|---|---|---|---|---|---|
| - | Activation of NCU-link communication | | | | POWER ON |
| N01 | | | | - | DWORD |
| - | - | 0 | 0 | 3 | 3/2 |

| 18781 | NCU_LINK_CONNECTIONS | | | | B3 |
|---|---|---|---|---|---|
| - | Number of internal link connections | | | | POWER ON |
| N01 | | | | LINK | DWORD |
| - | - | 0 | 0 | 32 | 3/1 |

| 18782 | MM_LINK_NUM_OF_MODULES | | | | B3 |
|---|---|---|---|---|---|
| - | Number of NCU-link modules | | | | POWER ON |
| N01, N02 | | | | - | DWORD |
| - | - | 2 | 2 | 16 | 3/2 |

| 18790 | MM_MAX_TRACE_LINK_POINTS | | | | B3 |
|---|---|---|---|---|---|
| - | Size of the trace data buffer for NCU-link | | | | POWER ON |
| EXP, N02, N06 | | | | NBUP | DWORD |
| - | - | 8 | 0 | 2000 | 2/2 |

| 18792 | MM_TRACE_LINK_DATA_FUNCTION | | | | B3 |
|---|---|---|---|---|---|
| - | Specifies the contents of the NCU-link files | | | | POWER ON |
| EXP, N02, N06 | | | | NBUP | DWORD |
| - | - | 0 | 0 | 0x7FFFFFFF | 2/2 |

© Siemens AG 2004 All Rights Reserved

| 18794 | MM_TRACE_VDI_SIGNAL | | | | - |
|---|---|---|---|---|---|
| - | Trace spec. of VDI signals | | | | POWER ON |
| EXP, N02, N06 | | | | NBUP | DWORD |
| - | - | 0 | 0 | 0x7FFFFFFF | 2/2 |

| 18800 | MM_EXTERN_LANGUAGE | | | | FBFA |
|---|---|---|---|---|---|
| - | Activation of external NC languages: | | | | POWER ON |
| N01, N12 | | | | - | DWORD |
| - | - | 0x0000 | 0x0000 | 0x0001 | 7/2 |

| 18860 | MM_MAINTENANCE_MON | | | | Inst. ePS |
|---|---|---|---|---|---|
| - | Activ. maintenance data recording | | | | POWER ON |
| EXP, N01 | | | | - | BOOLEAN |
| - | - | FALSE | - | - | 7/2 |

| 18880 | MM_MAXNUM_KIN_CHAIN_ELEM | | | | - |
|---|---|---|---|---|---|
| - | max. number of elements in kin. chains | | | | POWER ON |
| EXP, N01 | | | | - | DWORD |
| - | - | 0 | - | - | 7/2 |

| 18890 | MM_MAXNUM_PROT_AREA_ELEM | | | | - |
|---|---|---|---|---|---|
| - | max. number of elements in prot. areas | | | | POWER ON |
| EXP, N01 | | | | - | DWORD |
| - | - | 0 | - | - | 7/2 |

| 18900 | FPU_ERROR_MODE | | | | - |
|---|---|---|---|---|---|
| - | System reaction to FPU calculation error | | | | POWER ON |
| EXP | | | | NBUP, NDLD | DWORD |
| - | - | 0x1 | - | - | 0/0 |

| 18910 | FPU_CTRLWORD_INIT | | | | - |
|---|---|---|---|---|---|
| - | Basic initialization of FPU control word | | | | POWER ON |
| EXP | | | | NBUP, NDLD | DWORD |
| - | - | 0x37F | - | - | 0/0 |

| 18920 | FPU_EXEPTION_MASK | | | | - |
|---|---|---|---|---|---|
| - | Exception screen form for FPU calculation errors | | | | POWER ON |
| EXP | | | | NBUP, NDLD | DWORD |
| - | - | 0xD | - | - | 0/0 |

© Siemens AG 2004 All Rights Reserved

## 2.6 Channel-specific machine data

The display of the machine data has been extended in SW Version 4 and higher. The options Display filters and Attributes have been newly introduced.

**Display filters**

The quantity of machine data displayed on the operator panel can be limited to the machine data of interest by means of the display filters. Machine data are displayed on the operator panel if at least one of the filters indicated in the respective machine data has been activated by the user or if the mode “All machine data“ has been set. The short descriptions of the filters indicated are used again in the operator interface for filter activation. They have the following meaning:

- C01 Configuration
- C02 Memory configuration
- C03 Basic settings
- C04 Auxiliary functions
- C05 Velocities
- C06 Monitoring / limitations
- C07 Transformations
- C08 Overrides / compensations
- C09 Technological functions
- C10 Standard machine
- C11 NC-Language ISO-Dialect
- EXP Expert mode

**Attributes**

In some machine data, you will find short identifiers with the following meaning under attributes:

- NBUP No back-up: the data is not entered in data back-up
- ODLD Only download: the data can only be loaded from the file
- READ Read only: the data can only be read
- NDLD No download: the data cannot be loaded from the file
- SFCO Configuration safety integrated
- SCAL Scaling Alarm
- LINK Link description

© Siemens AG 2004 All Rights Reserved

- CTEQ Must be equal for all containers
- CTDE Container description

The fields of the machine data table elements are completed as follows:

**System** You will find the identifiers such as:
iajc with the meaning i axes and j channels for example

6a2c 6 axes, 2 channels.

**Note**

Machine data values which may differ according to the system used are listed in additional lines below the table header. In these cases, the fourth line is the standard assignment, the fifth line and any further lines contain differing values for the systems stated. The minus sign in a field means: The standard values stated in line 4 applies. The entry "-1" stated under protection means that there is no machine data for the system stated.

| **Number** | **MD identifier** | | | | Cross reference |
|---|---|---|---|---|---|
| Unit | Name | | | | Active |
| Display filters | | | | Attributes | D type |
| System | Dimension | Standard value | Minimum value | Maximum value | Protect. Level |

## 2.6.1 Basic channel machine data

| **20000** | **CHAN_NAME** | | | | K1 |
|---|---|---|---|---|---|
| - | Channel name | | | | POWER ON |
| C01, C10 | | | | - | STRING |
| - | -1 | "CHAN1","CHAN2","CHAN3","CHAN4"... | - | - | 7/2 |

| **20050** | **AXCONF_GEOAX_ASSIGN_TAB** | | | | K2 |
|---|---|---|---|---|---|
| - | Assignment of geometry axis to channel axis | | | | POWER ON |
| C01, C10 | | | | - | BYTE |
| - | 3 | 1, 2, 3,0, 0, 0,0, 0, 0,0, 0, 0... | 0 | 20 | 7/2 |
| 840d-2a2c | - | 0, 0, 0 | - | - | -/- |

| **20060** | **AXCONF_GEOAX_NAME_TAB** | | | | K2 |
|---|---|---|---|---|---|
| - | Geometry axis name in channel | | | | POWER ON |
| C01, C11, C10 | | | | - | STRING |
| - | 3 | "X", "Y", "Z","X", "Y", "Z"... | - | - | 7/2 |

© Siemens AG 2004 All Rights Reserved

| 20070 | AXCONF_MACHAX_USED | | | | K2 |
|---|---|---|---|---|---|
| - | Machine axis number valid in channel | | | | POWER ON |
| C01, C10 | | | | - | BYTE |
| - | 20 | 1, 2, 3, 4, 0, 0, 0, 0, 0, 0, 0, 0, 0, 0, 0, 0, 0, 0, 0, 0, 0, 0... | 0 | 31 | 7/2 |
| 840d-2a2c | 2 | 1, 0, 0, 0, 0, 0, 0, 0, 0, 0, 0, 0, 0, 0, 0... | - | - | -/- |
| 840d-4a1cg | 4 | - | - | - | -/- |
| 840di-basic | 6 | - | - | - | -/- |
| 840di-universal | 10 | - | - | - | -/- |
| 840di-plus | 18 | - | - | - | -/- |

| 20080 | AXCONF_CHANAX_NAME_TAB | | | | K2 |
|---|---|---|---|---|---|
| - | Channel axis name in channel | | | | POWER ON |
| C01, C11, C10 | | | | - | STRING |
| - | 20 | "X", "Y", "Z", "A", "B", "C", "U", "V", "X11", "Y11"... | - | - | 7/2 |
| 840d-2a2c | 2 | - | - | - | -/- |
| 840d-4a1cg | 4 | - | - | - | -/- |
| 840di-basic | 6 | - | - | - | -/- |
| 840di-universal | 10 | - | - | - | -/- |
| 840di-plus | 18 | - | - | - | -/- |

| 20090 | SPIND_DEF_MASTER_SPIND | | | | S1 |
|---|---|---|---|---|---|
| - | Initial setting of master spindle in channel | | | | POWER ON |
| C01, C03 | | | | - | BYTE |
| - | - | 1,1,1,1,1,1,1,1,1,1,1,1,1,1,1,1 | 1 | 20 | 7/2 |

| 20092 | SPIND_ASSIGN_TAB_ENABLE | | | | S1 |
|---|---|---|---|---|---|
| - | Enable/disable the spindle converter. | | | | RESET |
| C01, C03, C10 | | | | - | BYTE |
| - | - | 0,0,0,0,0,0,0,0,0,0,0,0,0,0,0,0 | 0 | 1 | 7/7 |

| 20094 | SPIND_RIGID_TAPPING_M_NR | | | | FBFA |
|---|---|---|---|---|---|
| - | M function for switching into controlled axis mode | | | | POWER ON |
| C01, C03, C10 | | | | - | DWORD |
| - | - | 70,70,70,70,70,70,70,70,70,70,70,70,70,70,70... | - | - | 7/2 |

© Siemens AG 2004 All Rights Reserved

| | | | | | |
|---|---|---|---|---|---|
| **20095** | **EXTERN_RIGID_TAPPING_M_NR** | | | | FBFA |
| - | M function for switching to controlled axis mode (external mode) | | | | POWER ON |
| C01, C11, C03, C10 | | | | - | DWORD |
| - | - | 29,29,29,29,29,29,29,29,29,29,29,29,29... | - | - | 7/2 |

| | | | | | |
|---|---|---|---|---|---|
| **20096** | **T_M_ADDRESS_EXT_IS_SPINO** | | | | W1,FBW |
| - | Meaning of address extension of T, M 'tool change code' | | | | POWER ON |
| C01, C04, C09 | | | | - | BOOLEAN |
| - | - | FALSE,FALSE,FALSE,FALSE,FALSE,FALSE... | - | - | 7/2 |

| | | | | | |
|---|---|---|---|---|---|
| **20098** | **DISPLAY_AXIS** | | | | IAD |
| - | Display axis on MMC | | | | IMMEDIATELY |
| EXP, C01 | | | | - | DWORD |
| - | 20 | 0xFFFFFFFF, 0xFFFFFFFF, 0xFFFFFFFF, 0xFFFFFFFF, 0xFFFFFFFF... | - | - | 7/2 |
| 840d-2a2c | 2 | - | - | - | -/- |
| 840d-4a1cg | 4 | - | - | - | -/- |
| 840di-basic | 6 | - | - | - | -/- |
| 840di-universal | 10 | - | - | - | -/- |
| 840di-plus | 18 | - | - | - | -/- |

| | | | | | |
|---|---|---|---|---|---|
| **20100** | **DIAMETER_AX_DEF** | | | | P1 |
| - | Geometry axis with transverse axis function | | | | POWER ON |
| C01, C10 | | | | - | STRING |
| - | -1 | | - | - | 7/2 |

| | | | | | |
|---|---|---|---|---|---|
| **20106** | **PROG_EVENT_IGN_SINGLEBLOCK** | | | | K1 |
| - | Prog-Events ignore single block | | | | POWER ON |
| N01 | | | | - | DWORD |
| - | - | 0x0,0x0,0x0,0x0,0x0,0x0,0x0,0x0,0x0,0x0,0x0... | 0 | 0x1F | 7/2 |

| | | | | | |
|---|---|---|---|---|---|
| **20107** | **PROG_EVENT_IGN_INHIBIT** | | | | K1 |
| - | Prog-Events ignore read-in disable | | | | POWER ON |
| N01 | | | | - | DWORD |
| - | - | 0x0,0x0,0x0,0x0,0x0,0x0,0x0,0x0,0x0,0x0,0x0... | 0 | 0x1F | 7/2 |

© Siemens AG 2004 All Rights Reserved

| | | | | | |
|---|---|---|---|---|---|
| **20108** | **PROG_EVENT_MASK** | | | | K1 |
| - | Setting of event-driven programm calls | | | | POWER ON |
| N01 | | | | - | DWORD |
| - | - | 0x0,0x0,0x0,0x0,0x0,0x0,0x0,0x0,0x0,0x0... | 0 | 0xF | 7/2 |

| | | | | | |
|---|---|---|---|---|---|
| **20109** | **PROG_EVENT_MASK_PROPERTIES** | | | | K1 |
| - | Properties of Prog-Events | | | | POWER ON |
| N01 | | | | - | DWORD |
| - | - | 0x0,0x0,0x0,0x0,0x0,0x0,0x0,0x0,0x0,0x0... | 0 | 0x1 | 7/2 |

| | | | | | |
|---|---|---|---|---|---|
| **20110** | **RESET_MODE_MASK** | | | | K1 |
| - | Definition of basic control settings after runup and reset | | | | RESET |
| C11, C03 | | | | - | DWORD |
| - | - | 0x0,0x0,0x0,0x0,0x0,0x0,0x0,0x0,0x0,0x0... | 0 | 0x3FFFF | 7/2 |
| 840di-basic | - | 0x1,0x1,0x1,0x1,0x1,0x1,0x1,0x1,0x1,0x1... | - | - | -/- |
| 840di-universal | - | 0x1,0x1,0x1,0x1,0x1,0x1,0x1,0x1,0x1,0x1... | - | - | -/- |
| 840di-plus | - | 0x1,0x1,0x1,0x1,0x1,0x1,0x1,0x1,0x1,0x1... | - | - | -/- |

| | | | | | |
|---|---|---|---|---|---|
| **20112** | **START_MODE_MASK** | | | | K1 |
| - | Definition of basic control settings after part program start | | | | RESET |
| C03 | | | | - | DWORD |
| - | - | 0x400,0x400,0x400,0x400,0x400,0x400,0x400... | 0 | 0x3FFFF | 7/2 |

| | | | | | |
|---|---|---|---|---|---|
| **20114** | **MODESWITCH_MASK** | | | | K1 |
| - | Interruption MDA by mode change | | | | RESET |
| C03 | | | | - | DWORD |
| - | - | 0x0,0x0,0x0,0x0,0x0,0x0,0x0,0x0,0x0,0x0... | 0 | 0xFFFF | 7/2 |

| | | | | | |
|---|---|---|---|---|---|
| **20116** | **IGNORE_INHIBIT_ASUP** | | | | K1 |
| - | An interrupt program can be executed despite a read in disable | | | | NEW CONF |
| C01 | | | | - | DWORD |
| - | - | 0,0,0,0,0,0,0,0,0,0,0,0,0,0,0,0 | - | - | 7/2 |

© Siemens AG 2004 All Rights Reserved

| 20117 | IGNORE_SINGLEBLOCK_ASUP | | | | K1 |
|---|---|---|---|---|---|
| - | An interrupt program is completely executed despite single block | | | | NEW CONF |
| C01 | | | | - | DWORD |
| - | - | 0,0,0,0,0,0,0,0,0,0,0,0,0,0,0,0 | - | - | 7/2 |

| 20118 | GEOAX_CHANGE_RESET | | | | K1 |
|---|---|---|---|---|---|
| - | Enable automatic geometry axis change | | | | RESET |
| C03 | | | | - | BOOLEAN |
| - | - | FALSE,FALSE,FALSE,FALSE,FALSE,FALSE... | - | - | 7/2 |

| 20120 | TOOL_RESET_VALUE | | | | K1 |
|---|---|---|---|---|---|
| - | Tool with length compens. during runup (reset/end of pp). | | | | RESET |
| C03 | | | | - | DWORD |
| - | - | 0,0,0,0,0,0,0,0,0,0,0,0,0,0,0,0 | 0 | 32000 | 7/2 |

| 20121 | TOOL_PRESEL_RESET_VALUE | | | | FBW,K1 |
|---|---|---|---|---|---|
| - | Preselected tool on RESET | | | | RESET |
| C03 | | | | - | DWORD |
| - | - | 0,0,0,0,0,0,0,0,0,0,0,0,0,0,0,0 | 0 | 32000 | 7/2 |

| 20122 | TOOL_RESET_NAME | | | | FBW |
|---|---|---|---|---|---|
| - | Tool with length compensation on runup/reset/end of pp. | | | | RESET |
| C03 | | | | - | STRING |
| - | -1 | | - | - | 7/2 |

| 20123 | USEKT_RESET_VALUE | | | | FBW |
|---|---|---|---|---|---|
| - | Preselected value of $P_USEKT on RESET | | | | RESET |
| C03 | | | | - | DWORD |
| - | - | 0,0,0,0,0,0,0,0,0,0,0,0,0,0,0,0 | 0 | 0xF | 7/2 |

| 20124 | TOOL_MANAGEMENT_TOOLHOLDER | | | | FBW |
|---|---|---|---|---|---|
| - | Toolholder number | | | | POWER ON |
| C03 | | | | - | DWORD |
| - | - | 0,0,0,0,0,0,0,0,0,0,0,0,0,0,0,0 | 0 | 20 | 7/2 |

© Siemens AG 2004 All Rights Reserved

| | | | | | |
|---|---|---|---|---|---|
| **20126** | **TOOL_CARRIER_RESET_VALUE** | | | | W1 |
| - | Active tool holder on RESET | | | | RESET |
| C03 | | | | - | DWORD |
| - | - | 0,0,0,0,0,0,0,0,0,0,0,0,0,0,0,0 | - | - | 7/2 |

| | | | | | |
|---|---|---|---|---|---|
| **20128** | **COLLECT_TOOL_CHANGE** | | | | FBW,K1 |
| - | Tool change picked up in search run | | | | POWER ON |
| C04 | | | | - | DWORD |
| - | - | 1,1,1,1,1,1,1,1,1,1,1,1,1,1,1,1 | - | - | 1/1 |

| | | | | | |
|---|---|---|---|---|---|
| **20130** | **CUTTING_EDGE_RESET_VALUE** | | | | K1 |
| - | Tool edge whose length compens. during runup (reset/end of pp). | | | | RESET |
| C03 | | | | - | DWORD |
| - | - | 0,0,0,0,0,0,0,0,0,0,0,0,0,0,0,0 | 0 | 32000 | 7/2 |

| | | | | | |
|---|---|---|---|---|---|
| **20132** | **SUMCORR_RESET_VALUE** | | | | W1 |
| - | Effective resulting offset on RESET | | | | RESET |
| C03 | | | | - | DWORD |
| - | - | 0,0,0,0,0,0,0,0,0,0,0,0,0,0,0,0 | 0 | 6 | 7/2 |

| | | | | | |
|---|---|---|---|---|---|
| **20140** | **TRAFO_RESET_VALUE** | | | | K1 |
| - | Transformation data block selected during runup (reset/pp end) | | | | RESET |
| C03 | | | | - | BYTE |
| - | - | 0,0,0,0,0,0,0,0,0,0,0,0,0,0,0,0 | 0 | 8 | 7/2 |

| | | | | | |
|---|---|---|---|---|---|
| **20144** | **TRAFO_MODE_MASK** | | | | M1 |
| - | Function selection of kin. transformation | | | | RESET |
| C07 | | | | - | BYTE |
| - | - | 0x0,0x0,0x0,0x0,0x0,0x0,0x0,0x0,0x0,0x0,0x0,0x0... | 0 | 0x01 | 7/2 |

| | | | | | |
|---|---|---|---|---|---|
| **20150** | **GCODE_RESET_VALUES** | | | | K1,G2 |
| - | Initial setting of G groups | | | | RESET |
| C11, C03 | | | | - | BYTE |
| - | 60 | 2, 0, 0, 1, 0, 1, 1, 1, 0, 1, 0, 1, 2, 1, 2, 1, 1, 1, 1, 1, 1... | - | - | 7/2 |

© Siemens AG 2004 All Rights Reserved

| | | | | | |
|---|---|---|---|---|---|
| **20152** | **GCODE_RESET_MODE** | | | | K1 |
| - | Reset mode of G groups | | | | RESET |
| C03 | | | | - | BYTE |
| - | 60 | 0, 0, 0, 0, 0, 0, 0, 0, 0, 0, 0, 0, 0, 0, 0, 0, 0, 0, 0, 0, 0, 0, 0... | 0 | 1 | 7/2 |

| | | | | | |
|---|---|---|---|---|---|
| **20154** | **EXTERN_GCODE_RESET_VALUES** | | | | FBFA |
| - | Initial setting of G groups | | | | RESET |
| C11, C03 | | | | - | BYTE |
| - | 31 | 1, 1, 1, 2, 1, 1, 1, 3, 4, 1, 1, 2, 2, 1, 3, 2, 1, 0, 1, 1, 1... | - | - | 2/2 |

| | | | | | |
|---|---|---|---|---|---|
| **20156** | **EXTERN_GCODE_RESET_MODE** | | | | K1 |
| - | Reset behavior of external G groups | | | | RESET |
| C03 | | | | - | BYTE |
| - | 31 | 0, 0, 0, 0, 0, 0, 0, 0, 0, 0, 0, 0, 0, 0, 0, 0, 0, 0, 0, 0, 0, 0, 0... | 0 | 1 | 7/2 |

| | | | | | |
|---|---|---|---|---|---|
| **20160** | **CUBIC_SPLINE_BLOCKS** | | | | K1 |
| - | Number of blocks for C spline | | | | POWER ON |
| EXP, C09 | | | | - | BYTE |
| - | - | 8,8,8,8,8,8,8,8,8,8,8,8,8,8,8,8,8,8,8,8 | 4 | 9 | 7/2 |

| | | | | | |
|---|---|---|---|---|---|
| **20170** | **COMPRESS_BLOCK_PATH_LIMIT** | | | | K1,PGA |
| mm | Maximum traversing distance of an NC block with compression | | | | NEW CONF |
| C09 | | | | - | DOUBLE |
| - | - | 1.0,1.0,1.0,1.0,1.0,1.0,1.0,1.0,1.0,1.0,1.0... | - | - | 7/2 |

| | | | | | |
|---|---|---|---|---|---|
| **20172** | **COMPRESS_VELO_TOL** | | | | V1,PGA |
| mm/min | Max. permissible deviation of path feedrate during compression | | | | POWER ON |
| C09 | | | | - | DOUBLE |
| - | - | 60000.0,60000.0,60000.0,60000.0... | - | - | 7/2 |

| | | | | | |
|---|---|---|---|---|---|
| **20180** | **TOCARR_ROT_ANGLE_INCR** | | | | W1 |
| - | Rotary axis increment of orientable toolholder | | | | NEW CONF |
| C08 | | | | - | DOUBLE |
| - | 2 | 0.0, 0.0,0.0, 0.0,0.0, 0.0,0.0, 0.0,0.0... | - | - | 7/3 |

© Siemens AG 2004 All Rights Reserved

| 20182 | TOCARR_ROT_ANGLE_OFFSET | | | | W1 |
|---|---|---|---|---|---|
| - | Rotary axis offset of orientable toolholder | | | | NEW CONF |
| C08 | | | | - | DOUBLE |
| - | 2 | 0.0, 0.0,0.0, 0.0,0.0, 0.0,0.0, 0.0... | - | - | 7/3 |

| 20184 | TOCARR_BASE_FRAME_NUMBER | | | | W1 |
|---|---|---|---|---|---|
| - | Base frame number for holding machine table offset | | | | NEW CONF |
| C08 | | | | - | DWORD |
| - | - | -1,-1,-1,-1,-1,-1,-1,-1,-1,-1,-1,-1,-1,-1... | -1 | 15 | 7/3 |

| 20188 | TOCARR_FINE_LIM_LIN | | | | W1 |
|---|---|---|---|---|---|
| mm | Limit of linear fine offset TCARR | | | | IMMEDIATELY |
| C07 | | | | - | DOUBLE |
| - | - | 1.0,1.0,1.0,1.0,1.0,1.0, 1.0,1.0,1.0... | - | - | 7/3 |

| 20190 | TOCARR_FINE_LIM_ROT | | | | W1 |
|---|---|---|---|---|---|
| degrees | Limit of rot. fine offset TCARR | | | | IMMEDIATELY |
| C07 | | | | - | DOUBLE |
| - | - | 1.0,1.0,1.0,1.0,1.0,1.0, 1.0,1.0,1.0... | - | - | 7/3 |

| 20200 | CHFRND_MAXNUM_DUMMY_BLOCKS | | | | K1 |
|---|---|---|---|---|---|
| - | Empty blocks with chamfer/radii | | | | POWER ON |
| EXP, C02, C06, C09 | | | | - | BYTE |
| - | - | 3,3,3,3,3,3,3,3,3,3,3,3, 3,3,3,3 | 0 | 15 | 7/2 |

| 20201 | CHFRND_MODE_MASK | | | | V1 |
|---|---|---|---|---|---|
| - | Chamfer/rounding behavior | | | | RESET |
| C09 | | | | - | DWORD |
| - | - | 0x0,0x0,0x0,0x0,0x0,0x0,0x 0,0x0,0x0,0x0... | 0 | 0xFFFF | 7/2 |

| 20202 | WAB_MAXNUM_DUMMY_BLOCKS | | | | W1 |
|---|---|---|---|---|---|
| - | Max. no. of blocks w/o traversing movement with SAR | | | | RESET |
| C02, C06 | | | | - | BYTE |
| - | - | 5,5,5,5,5,5,5,5,5,5,5,5, 5,5,5,5 | 0 | 10 | 7/2 |

© Siemens AG 2004 All Rights Reserved

| 20204 | WAB_CLEARANCE_TOLERANCE | | | | W1 |
|---|---|---|---|---|---|
| mm | Change of direction with SAR | | | | POWER ON |
| C06 | | | | - | DOUBLE |
| - | - | 0.01,0.01,0.01,0.01,0.01,0.01,0.01... | - | - | 7/2 |

| 20210 | CUTCOM_CORNER_LIMIT | | | | W1 |
|---|---|---|---|---|---|
| degrees | Maximum angle for compensation blocks with TRC | | | | RESET |
| C08, C06 | | | | - | DOUBLE |
| - | - | 100.,100.,100.,100.,100.,100.,100.... | 0.0 | 150. | 7/2 |

| 20220 | CUTCOM_MAX_DISC | | | | W1 |
|---|---|---|---|---|---|
| - | Maximum value for DISC | | | | RESET |
| C08, C06 | | | | - | DOUBLE |
| - | - | 50.0,50.0,50.0,50.0,50.0,50.0,50.0... | 0.0 | 75.0 | 7/2 |

| 20230 | CUTCOM_CURVE_INSERT_LIMIT | | | | W1 |
|---|---|---|---|---|---|
| - | Maximum angle for calculation of intersection with TRC | | | | RESET |
| C08, C06 | | | | - | DOUBLE |
| - | - | 10.,10.,10.,10.,10.,10.,10.,10.,10.... | 0.0 | 150. | 7/2 |

| 20240 | CUTCOM_MAXNUM_CHECK_BLOCKS | | | | W1 |
|---|---|---|---|---|---|
| - | Blocks for look-ahead contour calculation with TRC | | | | POWER ON |
| C08, C02 | | | | - | DWORD |
| - | - | 4,4,4,4,4,4,4,4,4,4,4,4,4,4,4,4 | 2 | - | 7/2 |

| 20250 | CUTCOM_MAXNUM_DUMMY_BLOCKS | | | | W1 |
|---|---|---|---|---|---|
| - | Number of blocks without traversing motion with TRC | | | | POWER ON |
| C08, C02 | | | | - | DWORD |
| - | - | 3,3,3,3,3,3,3,3,3,3,3,3,3,3,3,3 | - | - | 7/2 |

| 20252 | CUTCOM_MAXNUM_SUPPR_BLOCKS | | | | W1 |
|---|---|---|---|---|---|
| - | Max block count with compensation suppression | | | | POWER ON |
| EXP, C01, C08, C02 | | | | - | DWORD |
| - | - | 5,5,5,5,5,5,5,5,5,5,5,5,5,5,5,5 | - | - | 7/2 |

© Siemens AG 2004 All Rights Reserved

| | | | | | |
|---|---|---|---|---|---|
| **20254** | **ONLINE_CUTCOM_ENABLE** | | | | W4 |
| - | Real time tool radius compensation enabled | | | | POWER ON |
| EXP, C01, C08 | | | | - | BOOLEAN |
| - | - | FALSE,FALSE,FALSE,FALSE,FALSE,FALSE... | - | - | 7/2 |

| | | | | | |
|---|---|---|---|---|---|
| **20256** | **CUTCOM_INTERS_POLY_ENABLE** | | | | W1 |
| - | Intersection procedure for polynomials is possible | | | | POWER ON |
| C09 | | | | - | BOOLEAN |
| - | - | TRUE,TRUE,TRUE,TRUE,TRUE,TRUE... | - | - | 7/2 |

| | | | | | |
|---|---|---|---|---|---|
| **20260** | **PATH_IPO_IS_ON_TCP** | | | | - |
| - | Velocity control with spline | | | | POWER ON |
| EXP, C09, C05 | | | | - | BOOLEAN |
| - | - | FALSE,FALSE,FALSE,FALSE,FALSE,FALSE... | - | - | 0/0 |

| | | | | | |
|---|---|---|---|---|---|
| **20262** | **SPLINE_FEED_PRECISION** | | | | - |
| - | Permissible rel. error of path velocity for spline | | | | POWER ON |
| EXP, C09, C05 | | | | - | DOUBLE |
| - | - | 0.001,0.001,0.001,0.001,0.001,0.001... | 0.000001 | 1.0 | 0/0 |

| | | | | | |
|---|---|---|---|---|---|
| **20270** | **CUTTING_EDGE_DEFAULT** | | | | W1 |
| - | Initial position of tool cutting edge without programming | | | | POWER ON |
| C11, C03 | | | | - | DWORD |
| - | - | 1,1,1,1,1,1,1,1,1,1,1,1,1,1,1,1 | -2 | 32000 | 7/2 |

| | | | | | |
|---|---|---|---|---|---|
| **20272** | **SUMCORR_DEFAULT** | | | | W1 |
| - | Initial position resulting offset without program | | | | POWER ON |
| C03 | | | | - | DWORD |
| - | - | 0,0,0,0,0,0,0,0,0,0,0,0,0,0,0,0 | -1 | 6 | 7/2 |

© Siemens AG 2004 All Rights Reserved

| 20310 | TOOL_MANAGEMENT_MASK | | | | FBW |
|---|---|---|---|---|---|
| - | Activation of different types of tool management | | | | POWER ON |
| C09 | | | | - | DWORD |
| - | - | 0x0,0x0,0x0,0x0,0x0,0x0,0x0,0x0,0x0,0x0... | 0 | 0xFFFFFFF | 7/2 |

| 20320 | TOOL_TIME_MONITOR_MASK | | | | FBW |
|---|---|---|---|---|---|
| - | Activation of tool time monitoring for tool in spindle 1...x | | | | POWER ON |
| C06, C09 | | | | - | DWORD |
| - | - | 0x0,0x0,0x0,0x0,0x0,0x0,0x0,0x0,0x0,0x0... | - | - | 7/2 |

| 20350 | TOOL_GRIND_AUTO_TMON | | | | W4 |
|---|---|---|---|---|---|
| - | Activation of tool monitoring 0/1: Monitoring off/on | | | | POWER ON |
| C06, C09 | | | | - | BYTE |
| - | - | 0,0,0,0,0,0,0,0,0,0,0,0,0,0,0,0 | 0 | 1 | 7/2 |

| 20360 | TOOL_PARAMETER_DEF_MASK | | | | W1 |
|---|---|---|---|---|---|
| - | Definition of tool parameters | | | | POWER ON |
| C09 | | | | - | DWORD |
| - | - | 0x0,0x0,0x0,0x0,0x0,0x0,0x0,0x0,0x0,0x0... | 0 | 0xFFFF | 7/2 |

| 20370 | SHAPED_TOOL_TYPE_NO | | | | - |
|---|---|---|---|---|---|
| - | Tool type number for contour tools | | | | IMMEDIATELY |
| C01, C08 | | | | - | DWORD |
| - | 4 | 0, 0, 0, 0,0, 0, 0, 0,0, 0, 0, 0... | - | - | 7/2 |

| 20372 | SHAPED_TOOL_CHECKSUM | | | | - |
|---|---|---|---|---|---|
| - | Checksum test for contour tools | | | | IMMEDIATELY |
| C01, C08 | | | | - | BOOLEAN |
| - | - | FALSE,FALSE,FALSE,FALSE,FALSE,FALSE... | - | - | 7/5 |

| 20380 | TOOL_CORR_MODE_G43G44 | | | | FBFA |
|---|---|---|---|---|---|
| - | Treatment of tool length compensation with G43 / G44 | | | | RESET |
| C01, C08, C11 | | | | - | BYTE |
| - | - | 0,0,0,0,0,0,0,0,0,0,0,0,0,0,0,0 | 0 | 2 | 7/2 |

© Siemens AG 2004 All Rights Reserved

| | | | | | |
|---|---|---|---|---|---|
| **20382** | **TOOL_CORR_MOVE_MODE** | | | | FBFA |
| - | Traverse of tool length compensation | | | | RESET |
| C01, C08 | | | | - | BOOLEAN |
| - | - | FALSE,FALSE,FALSE, FALSE,FALSE,FALSE. .. | - | - | 7/2 |

| | | | | | |
|---|---|---|---|---|---|
| **20384** | **TOOL_CORR_MULTIPLE_AXES** | | | | FBFA |
| - | Tool length compensation simultaneously in more than one axis | | | | RESET |
| C01, C08, C11 | | | | - | BOOLEAN |
| - | - | TRUE,TRUE,TRUE,TR UE,TRUE,TRUE,TRUE ... | - | - | 7/2 |

| | | | | | |
|---|---|---|---|---|---|
| **20390** | **TOOL_TEMP_COMP_ON** | | | | W1 |
| - | Activation of tool length temperat. compens. | | | | RESET |
| C01, C08 | | | | - | BOOLEAN |
| - | - | FALSE,FALSE,FALSE, FALSE,FALSE,FALSE. .. | - | - | 7/2 |

| | | | | | |
|---|---|---|---|---|---|
| **20392** | **TOOL_TEMP_COMP_LIMIT** | | | | W1,BAS,PG |
| mm | Max. value of tool length temperat. comp. | | | | RESET |
| C01, C08 | | | | - | DOUBLE |
| - | 3 | 1.0, 1.0 , 1.0,1.0, 1.0 , 1.0... | - | - | 7/7 |

| | | | | | |
|---|---|---|---|---|---|
| **20396** | **TOOL_OFFSET_DRF_ON** | | | | W1 |
| - | DRF offset in tool direction | | | | RESET |
| C01, C08 | | | | - | BOOLEAN |
| - | - | FALSE,FALSE,FALSE, FALSE,FALSE,FALSE. .. | - | - | 7/2 |

| | | | | | |
|---|---|---|---|---|---|
| **20400** | **LOOKAH_USE_VELO_NEXT_BLOCK** | | | | B1 |
| - | Look Ahead to programmed following block velocity | | | | POWER ON |
| EXP, C05 | | | | - | BOOLEAN |
| - | - | TRUE,TRUE,TRUE,TR UE,TRUE,TRUE,TRUE ... | - | - | 7/2 |

© Siemens AG 2004 All Rights Reserved

| 20430 | LOOKAH_NUM_OVR_POINTS | | | | B1 |
|---|---|---|---|---|---|
| - | Number of override velocity characteristics with Look Ahead | | | | POWER ON |
| EXP, C02, C05 | | | | - | DWORD |
| - | - | 1,1,1,1,1,1,1,1,1,1,1,1,1,1,1,1 | 0 | 2 | 7/2 |

| 20440 | LOOKAH_OVR_POINTS | | | | B1 |
|---|---|---|---|---|---|
| - | Prepared override velocity characteristics with Look Ahead | | | | POWER ON |
| EXP, C05 | | | | - | DOUBLE |
| - | 2 | 1.0, 0.2,1.0, 0.2,1.0, 0.2,1.0, 0.2... | 0.2 | 2.0 | 7/2 |

| 20450 | LOOKAH_RELIEVE_BLOCK_CYCLE | | | | B1 |
|---|---|---|---|---|---|
| - | Relief factor for block cycle time | | | | POWER ON |
| EXP, C05 | | | | - | DOUBLE |
| - | - | 0.0,0.0,0.0,0.0,0.0,0.0,0.0,0.0,0.0,0.0... | - | - | 7/2 |

| 20455 | LOOKAH_FUNCTION_MASK | | | | FBSI |
|---|---|---|---|---|---|
| - | Look Ahead special functions | | | | NEW CONF |
| EXP, C05 | | | | - | BYTE |
| - | - | 1,1,1,1,1,1,1,1,1,1,1,1,1,1,1,1 | 0 | 1 | 7/2 |

| 20460 | LOOKAH_SMOOTH_FACTOR | | | | B1 |
|---|---|---|---|---|---|
| % | Smoothing factor for Look Ahead | | | | NEW CONF |
| EXP, C05 | | | | - | DOUBLE |
| - | - | 0.0,0.0,0.0,0.0,0.0,0.0,0.0,0.0,0.0,0.0... | 0. | 500.0 | 7/2 |

| 20462 | LOOKAH_SMOOTH_WITH_FEED | | | | B1 |
|---|---|---|---|---|---|
| - | Path velocity smoothing with programmed feed | | | | NEW CONF |
| EXP, C05 | | | | - | BOOLEAN |
| - | - | TRUE,TRUE,TRUE,TRUE,TRUE,TRUE,TRUE,TRUE... | - | - | 7/2 |

| 20465 | ADAPT_PATH_DYNAMIC | | | | B1 |
|---|---|---|---|---|---|
| - | Adaptation of path dynamic response | | | | NEW CONF |
| EXP, C05 | | | | - | DOUBLE |
| - | 2 | 1.0, 1.0,1.0, 1.0,1.0, 1.0,1.0, 1.0... | 1.0 | 100.0 | 7/2 |

© Siemens AG 2004 All Rights Reserved

| | | | | | |
|---|---|---|---|---|---|
| **20470** | **CPREC_WITH_FFW** | | | | K6,B1 |
| - | Progr. contour accuracy | | | | POWER ON |
| EXP, C06, C05 | | | | - | BOOLEAN |
| - | - | FALSE,FALSE,FALSE, FALSE,FALSE,FALSE. .. | - | - | 7/2 |

| | | | | | |
|---|---|---|---|---|---|
| **20480** | **SMOOTHING_MODE** | | | | B1 |
| - | Behavior of smoothing with G642 and G64 | | | | NEW CONF |
| EXP | | | | - | DWORD |
| - | - | 0,0,0,0,0,0,0,0,0,0,0,0, 0,0,0,0 | 0 | 15344 | 7/7 |

| | | | | | |
|---|---|---|---|---|---|
| **20482** | **COMPRESSOR_MODE** | | | | F2,PGA |
| - | Mode of compressor | | | | NEW CONF |
| EXP | | | | - | BYTE |
| - | - | 0,0,0,0,0,0,0,0,0,0,0,0, 0,0,0,0 | 0 | 33 | 7/7 |

| | | | | | |
|---|---|---|---|---|---|
| **20484** | **COMPRESSOR_PERFORMANCE** | | | | PGA |
| - | Compressor power | | | | RESET |
| EXP | | | | - | BYTE |
| - | - | 9,9,9,9,9,9,9,9,9,9,9,9, 9,9,9,9 | 0 | 9 | 0/0 |
| 810d | - | 0,0,0,0,0,0,0,0,0,0 | - | - | -/- |

| | | | | | |
|---|---|---|---|---|---|
| **20490** | **IGNORE_OVL_FACTOR_FOR_ADIS** | | | | - |
| - | G641/G642 independent of overload factor | | | | NEW CONF |
| EXP | | | | - | BOOLEAN |
| - | - | FALSE,FALSE,FALSE, FALSE,FALSE,FALSE. .. | - | - | 7/2 |

| | | | | | |
|---|---|---|---|---|---|
| **20500** | **CONST_VELO_MIN_TIME** | | | | B2 |
| s | Minimum time with constant velocity | | | | POWER ON |
| EXP, C05 | | | | - | DOUBLE |
| - | - | 0.0,0.0,0.0,0.0,0.0,0.0, 0.0,0.0,0.0,0.0... | 0.0 | 0.1 | 7/2 |

© Siemens AG 2004 All Rights Reserved

| | | | | | |
|---|---|---|---|---|---|
| **20550** | **EXACT_POS_MODE** | | | | B1 |
| - | Exact stop conditions on G00/G01. | | | | NEW CONF |
| EXP | | | | - | BYTE |
| - | - | 0,0,0,0,0,0,0,0,0,0,0,0,0,0,0,0 | 0 | 33 | 7/2 |

| | | | | | |
|---|---|---|---|---|---|
| **20552** | **EXACT_POS_MODE_G0_TO_G1** | | | | PG |
| - | Exact stop condition at G00-G01 transition | | | | NEW CONF |
| EXP | | | | - | BYTE |
| - | - | 0,0,0,0,0,0,0,0,0,0,0,0,0,0,0,0 | 0 | 5 | 7/2 |

| | | | | | |
|---|---|---|---|---|---|
| **20600** | **MAX_PATH_JERK** | | | | B2 |
| m/s³ | Path-related maximum jerk | | | | NEW CONF |
| C05 | | | | - | DOUBLE |
| - | 5 | 100., 100., 100., 100., 100.... | 1.e-9 | - | 7/2 |

| | | | | | |
|---|---|---|---|---|---|
| **20602** | **CURV_EFFECT_ON_PATH_ACCEL** | | | | B1 |
| - | Effect of path curvature on path dynamic | | | | NEW CONF |
| EXP, C05 | | | | - | DOUBLE |
| - | 5 | 0., 0., 0., 0., 0.,0., 0., 0., 0., 0.... | 0. | 0.95 | 7/2 |

| | | | | | |
|---|---|---|---|---|---|
| **20603** | **CURV_EFFECT_ON_PATH_JERK** | | | | B1 |
| - | Effect of path curvature on path jerk | | | | NEW CONF |
| EXP, C05 | | | | - | DOUBLE |
| - | 5 | 0., 0., 0., 0., 0.,0., 0., 0., 0., 0.... | 0. | 1000. | 7/2 |

| | | | | | |
|---|---|---|---|---|---|
| **20610** | **ADD_MOVE_ACCEL_RESERVE** | | | | K1,B1,B2 |
| - | Acceleration margin for overlaid movements | | | | POWER ON |
| C05 | | | | - | DOUBLE |
| - | - | .2,.2,.2,.2,.2,.2,.2,.2,.2,.2,.2,.2,.2... | 0. | 0.9 | 7/2 |

| | | | | | |
|---|---|---|---|---|---|
| **20620** | **HANDWH_GEOAX_MAX_INCR_SIZE** | | | | H1 |
| mm | Limitation handwheel increment for geo axes | | | | POWER ON |
| C08, C06 | | | | - | DOUBLE |
| - | - | 0.0,0.0,0.0,0.0,0.0,0.0, 0.0,0.0,0.0,0.0... | - | - | 7/2 |

© Siemens AG 2004 All Rights Reserved

| | | | | | |
|---|---|---|---|---|---|
| **20621** | **HANDWH_ORIAX_MAX_INCR_SIZE** | | | | F2 |
| degrees | Limiting of handwheel increment for orientation axes | | | | POWER ON |
| C08, C06 | | | | - | DOUBLE |
| - | - | 0.0,0.0,0.0,0.0,0.0,0.0, 0.0,0.0,0.0... | - | - | 7/2 |

| | | | | | |
|---|---|---|---|---|---|
| **20622** | **HANDWH_GEOAX_MAX_INCR_VSIZE** | | | | H1 |
| mm/min | Path velocity override | | | | POWER ON |
| C08, C06, C05 | | | | - | DOUBLE |
| - | - | 500.,500.,500.,500.,50 0.,500.,500.... | - | - | 7/2 |

| | | | | | |
|---|---|---|---|---|---|
| **20623** | **HANDWH_ORIAX_MAX_INCR_VSIZE** | | | | F2 |
| rev/min | Orientation velocity overlay | | | | POWER ON |
| C08, C06, C05 | | | | - | DOUBLE |
| - | - | 0.1,0.1,0.1,0.1,0.1,0.1, 0.1,0.1,0.1... | - | - | 7/2 |

| | | | | | |
|---|---|---|---|---|---|
| **20624** | **HANDWH_CHAN_STOP_COND** | | | | H1 |
| - | Def. of response of handwheel travel to channel-specific VDI ISs | | | | POWER ON |
| EXP, C09 | | | | - | DWORD |
| - | - | 0x13FF,0x13FF,0x13F F,0x13FF,0x13FF... | 0 | 0xFFFF | 7/2 |

| | | | | | |
|---|---|---|---|---|---|
| **20700** | **REFP_NC_START_LOCK** | | | | R1 |
| - | NC start disable without reference point | | | | RESET |
| C01, C03 | | | | - | BOOLEAN |
| - | - | TRUE,TRUE,TRUE,TR UE,TRUE,TRUE,TRUE ... | - | - | 7/2 |

| | | | | | |
|---|---|---|---|---|---|
| **20730** | **G0_LINEAR_MODE** | | | | P2 |
| - | G0 interpolation mode | | | | POWER ON |
| C09 | | | | - | BOOLEAN |
| - | - | TRUE,TRUE,TRUE,TR UE,TRUE,TRUE,TRUE ... | - | - | 7/2 |

| | | | | | |
|---|---|---|---|---|---|
| **20732** | **EXTERN_G0_LINEAR_MODE** | | | | P2 |
| - | G00 interpolation mode | | | | POWER ON |
| N12 | | | | - | BOOLEAN |
| - | - | TRUE,TRUE,TRUE,TR UE,TRUE,TRUE,TRUE ... | - | - | 7/2 |

© Siemens AG 2004 All Rights Reserved

| | | | | | |
|---|---|---|---|---|---|
| **20734** | **EXTERN_FUNCTION_MASK** | | | | FBFA |
| - | Function screenform for external language | | | | RESET |
| N12 | | | | - | DWORD |
| - | - | 0,0,0,0,0,0,0,0,0,0,0,0,0,0,0,0 | 0 | 0xFFFF | 7/2 |

| | | | | | |
|---|---|---|---|---|---|
| **20750** | **ALLOW_G0_IN_G96** | | | | V1 |
| - | G0 logic with G96 | | | | POWER ON |
| C09, C05 | | | | - | BOOLEAN |
| - | - | TRUE,TRUE,TRUE,TRUE,TRUE,TRUE,TRUE ... | - | - | 7/2 |

| | | | | | |
|---|---|---|---|---|---|
| **20800** | **SPF_END_TO_VDI** | | | | H2 |
| - | End of subroutine to PLC | | | | POWER ON |
| C04, C03 | | | | - | BYTE |
| - | - | 1,1,1,1,1,1,1,1,1,1,1,1,1,1,1,1 | - | - | 7/2 |

| | | | | | |
|---|---|---|---|---|---|
| **20850** | **SPOS_TO_VDI** | | | | S1 |
| - | Output of M19 to PLC on SPOS/SPOSA | | | | POWER ON |
| C04, C03 | | | | - | BYTE |
| - | - | 0,0,0,0,0,0,0,0,0,0,0,0,0,0,0,0 | - | - | 7/2 |

| | | | | | |
|---|---|---|---|---|---|
| **20900** | **CTAB_ENABLE_NO_LEADMOTION** | | | | M3 |
| - | Curve tables with jump of slave axis | | | | RESET |
| EXP | | | | - | BYTE |
| - | - | 0,0,0,0,0,0,0,0,0,0,0,0,0,0,0,0 | 0 | 2 | 7/2 |

| | | | | | |
|---|---|---|---|---|---|
| **20905** | **CTAB_DEFAULT_MEMORY_TYPE** | | | | M3 |
| - | Default memory type for curve tables | | | | RESET |
| EXP | | | | - | BYTE |
| - | - | 0,0,0,0,0,0,0,0,0,0,0,0,0,0,0,0 | 0 | 1 | 7/2 |

| | | | | | |
|---|---|---|---|---|---|
| **21000** | **CIRCLE_ERROR_CONST** | | | | K1 |
| mm | Circle end point monitoring constant | | | | POWER ON |
| C06 | | | | - | DOUBLE |
| - | - | 0.01,0.01,0.01,0.01,0.01,0.01,0.01,0.01... | - | - | 7/2 |

© Siemens AG 2004 All Rights Reserved

| | | | | | |
|---|---|---|---|---|---|
| **21010** | **CIRCLE_ERROR_FACTOR** | | | | K1 |
| - | Circle end point monitoring factor | | | | POWER ON |
| C06 | | | | - | DOUBLE |
| - | - | 0.001,0.001,0.001,0.001,0.001,0.001... | - | - | 7/2 |

| | | | | | |
|---|---|---|---|---|---|
| **21015** | **INVOLUTE_RADIUS_DELTA** | | | | PG |
| mm | Involute end point monitoring | | | | POWER ON |
| C06 | | | | - | DOUBLE |
| - | - | 0.01,0.01,0.01,0.01,0.01,0.01,0.01... | - | - | 7/2 |

| | | | | | |
|---|---|---|---|---|---|
| **21016** | **INVOLUTE_AUTO_ANGLE_LIMIT** | | | | PG |
| - | Auto angle limit. at involute ipo | | | | POWER ON |
| C06 | | | | - | BOOLEAN |
| - | - | FALSE,FALSE,FALSE,FALSE,FALSE,FALSE... | - | - | 7/2 |

| | | | | | |
|---|---|---|---|---|---|
| **21020** | **WORKAREA_WITH_TOOL_RADIUS** | | | | A3 |
| - | Consideration of tool radius for working area limitation | | | | RESET |
| C03, C06 | | | | - | BOOLEAN |
| - | - | FALSE,FALSE,FALSE,FALSE,FALSE,FALSE... | - | - | 7/2 |

| | | | | | |
|---|---|---|---|---|---|
| **21050** | **CONTOUR_TUNNEL_TOL** | | | | F2 |
| mm | Response threshold for contour tunnel monitoring | | | | NEW CONF |
| C06 | | | | - | DOUBLE |
| - | - | 0.0,0.0,0.0,0.0,0.0,0.0,0.0,0.0,0.0,0.0... | - | - | 7/2 |

| | | | | | |
|---|---|---|---|---|---|
| **21060** | **CONTOUR_TUNNEL_REACTION** | | | | F2 |
| - | Reaction when contour tunnel monitoring responds | | | | POWER ON |
| C06 | | | | - | BYTE |
| - | - | 1,1,1,1,1,1,1,1,1,1,1,1,1,1,1,1 | 0 | 2 | 7/2 |

| | | | | | |
|---|---|---|---|---|---|
| **21070** | **CONTOUR_ASSIGN_FASTOUT** | | | | F2 |
| - | Assignment of an analog output for the output of contour error | | | | POWER ON |
| C01, C06 | | | | - | BYTE |
| - | - | 0,0,0,0,0,0,0,0,0,0,0,0,0,0,0,0 | 0 | 8 | 7/2 |

© Siemens AG 2004 All Rights Reserved

| 21080 | CUTCOM_PARALLEL_ORI_LIMIT | | | | W5 |
|---|---|---|---|---|---|
| degrees | Limit angle (path tangent/tool orient.) 3D tool radius compens. | | | | RESET |
| C08, C06 | | | | - | DOUBLE |
| - | - | 3.,3.,3.,3.,3.,3.,3.,3.,3.,3.,3.,3.,3.... | 0.1 | 89. | 7/2 |

| 21082 | CUTCOM_PLANE_ORI_LIMIT | | | | W5 |
|---|---|---|---|---|---|
| degrees | Minimum angle between surface normal and tool orientation | | | | RESET |
| C08, C06 | | | | - | DOUBLE |
| - | - | 3.,3.,3.,3.,3.,3.,3.,3.,3.,3.,3.,3.,3.... | 1.0 | 89. | 7/2 |

| 21084 | CUTCOM_PLANE_PATH_LIMIT | | | | W5 |
|---|---|---|---|---|---|
| degrees | Min. angle between surface normal vector and path tangent vector | | | | RESET |
| C08, C06 | | | | - | DOUBLE |
| - | - | 3.,3.,3.,3.,3.,3.,3.,3.,3.,3.,3.,3.,3.... | 1.0 | 89. | 7/2 |

| 21090 | MAX_LEAD_ANGLE | | | | M1 |
|---|---|---|---|---|---|
| degrees | Maximum value of permitted lead angle for orientation progr. | | | | NEW CONF |
| C08, C09 | | | | - | DOUBLE |
| - | - | 80.,80.,80.,80.,80.,80.,80.,80.,80.,80.... | 0. | 80. | 7/7 |

| 21092 | MAX_TILT_ANGLE | | | | M1 |
|---|---|---|---|---|---|
| degrees | Maximum value of permitted side angle for orientation progr. | | | | NEW CONF |
| C08, C09 | | | | - | DOUBLE |
| - | - | 180.,180.,180.,180.,180.,180.,180.,180.,180.,180.... | -180. | 180. | 7/7 |

| 21094 | ORIPATH_MODE | | | | - |
|---|---|---|---|---|---|
| - | Configuration for ORIPATH | | | | NEW CONF |
| C02 | | | | - | BYTE |
| - | - | 0,0,0,0,0,0,0,0,0,0,0,0,0,0,0,0,0,0,0,0,0,0,0,0,0,0,0,0,0,0,0,0 | 0 | 1 | 3/3 |

| 21100 | ORIENTATION_IS_EULER | | | | F2 |
|---|---|---|---|---|---|
| - | Angle definition for orientation programming | | | | NEW CONF |
| C01, C09 | | | | - | BOOLEAN |
| - | - | TRUE,TRUE,TRUE,TRUE,TRUE,TRUE,TRUE,TRUE,TRUE,TRUE... | - | - | 7/7 |

© Siemens AG 2004 All Rights Reserved

| | | | | | |
|---|---|---|---|---|---|
| **21102** | **ORI_DEF_WITH_G_CODE** | | | | F2 |
| - | Def. of ORI axes with G code | | | | RESET |
| C01, C07 | | | | - | BOOLEAN |
| - | - | FALSE,FALSE,FALSE, FALSE,FALSE,FALSE... | - | - | 7/2 |

| | | | | | |
|---|---|---|---|---|---|
| **21104** | **ORI_IPO_WITH_G_CODE** | | | | F2 |
| - | G code for interpolation of orientation | | | | RESET |
| C01, C07 | | | | - | BOOLEAN |
| - | - | FALSE,FALSE,FALSE, FALSE,FALSE,FALSE... | - | - | 7/2 |

| | | | | | |
|---|---|---|---|---|---|
| **21106** | **CART_JOG_SYSTEM** | | | | H1 |
| - | Coordinate systems for Cartesian jog | | | | POWER ON |
| C01, C07 | | | | - | DWORD |
| - | - | 0,0,0,0,0,0,0,0,0,0,0,0, 0,0,0,0 | 0 | 7 | 7/2 |

| | | | | | |
|---|---|---|---|---|---|
| **21108** | **POLE_ORI_MODE** | | | | F2 |
| - | Great circle interpolation mode in pole position | | | | NEW CONF |
| C07 | | | | - | DWORD |
| - | - | 0,0,0,0,0,0,0,0,0,0,0,0, 0,0,0,0 | 0 | 22 | 7/7 |

| | | | | | |
|---|---|---|---|---|---|
| **21110** | **X_AXIS_IN_OLD_X_Z_PLANE** | | | | M1 |
| - | Coordinate system for automatic frame definition | | | | POWER ON |
| EXP, C01, C09 | | | | - | BOOLEAN |
| - | - | TRUE,TRUE,TRUE,TRUE,TRUE,TRUE,TRUE... | - | - | 7/7 |

| | | | | | |
|---|---|---|---|---|---|
| **21120** | **ORIAX_TURN_TAB_1** | | | | F2 |
| - | Definition of reference axes for ORI axes | | | | RESET |
| C07 | | | | - | BYTE |
| - | 3 | 1, 2, 3,1, 2, 3,1, 2, 3,1, 2, 3... | 0 | 3 | 7/2 |

| | | | | | |
|---|---|---|---|---|---|
| **21130** | **ORIAX_TURN_TAB_2** | | | | F2 |
| - | Definition of reference axes for ORI axes | | | | RESET |
| C07 | | | | - | BYTE |
| - | 3 | 1, 2, 3,1, 2, 3,1, 2, 3,1, 2, 3... | 0 | 3 | 7/2 |

© Siemens AG 2004 All Rights Reserved

| | | | | | |
|---|---|---|---|---|---|
| **21150** | **JOG_VELO_RAPID_ORI** | | | | F2 |
| rev/min | JOG rapid traverse for ORI axes | | | | RESET |
| C07 | | | | - | DOUBLE |
| - | 3 | 10.0, 10.0, 10.0,10.0, 10.0, 10.0... | - | - | 7/2 |

| | | | | | |
|---|---|---|---|---|---|
| **21155** | **JOG_VELO_ORI** | | | | F2 |
| rev/min | JOG ORI axis velocity | | | | RESET |
| C07 | | | | - | DOUBLE |
| - | 3 | 2.0, 2.0, 2.0,2.0, 2.0, 2.0... | - | - | 7/2 |

| | | | | | |
|---|---|---|---|---|---|
| **21160** | **JOG_VELO_RAPID_GEO** | | | | F2 |
| mm/min | JOG rapid traverse for GEO axes | | | | RESET |
| C07 | | | | - | DOUBLE |
| - | 3 | 10000., 10000.0, 10000.,10000., 10000.0, 10000.... | - | - | 7/2 |

| | | | | | |
|---|---|---|---|---|---|
| **21165** | **JOG_VELO_GEO** | | | | F2 |
| mm/min | JOG GEO axis velocity | | | | RESET |
| C07 | | | | - | DOUBLE |
| - | 3 | 1000., 1000., 1000.,1000., 1000., 1000.... | - | - | 7/2 |

| | | | | | |
|---|---|---|---|---|---|
| **21170** | **ACCEL_ORI** | | | | F2 |
| rev/s² | Acceleration for ORI axes | | | | NEW CONF |
| C07 | | | | - | DOUBLE |
| - | 3 | .05, .05, .05,.05, .05, .05... | - | - | 7/2 |

| | | | | | |
|---|---|---|---|---|---|
| **21180** | **ROT_AX_SWL_CHECK_MODE** | | | | F2 |
| - | Check of software limits for ori. axes | | | | IMMEDIATELY |
| C07 | | | | - | DWORD |
| - | - | 0,0,0,0,0,0,0,0,0,0,0,0, 0,0,0,0 | 0 | 2 | 7/2 |

© Siemens AG 2004 All Rights Reserved

| | | | | | |
|---|---|---|---|---|---|
| **21186** | **TOCARR_ROT_OFFSET_FROM_FR** | | | | - |
| - | Offset of TOCARR rotary axes from WO | | | | IMMEDIATELY |
| C01, C07 | | | | - | BOOLEAN |
| - | - | FALSE,FALSE,FALSE, FALSE,FALSE,FALSE... | - | - | 7/2 |

| | | | | | |
|---|---|---|---|---|---|
| **21190** | **TOFF_MODE** | | | | F2 |
| - | Mode of correction in tool direction | | | | RESET |
| C08 | | | | - | BYTE |
| - | - | 0,0,0,0,0,0,0,0,0,0,0,0,0,0,0,0 | - | - | 7/2 |

| | | | | | |
|---|---|---|---|---|---|
| **21194** | **TOFF_VELO** | | | | F2 |
| mm/min | Feedrate for online correction in tool dir. | | | | NEW CONF |
| C08 | | | | - | DOUBLE |
| - | 3 | 0., 0., 0.,0., 0., 0.,0., 0., 0.... | - | - | 7/2 |

| | | | | | |
|---|---|---|---|---|---|
| **21196** | **TOFF_ACCEL** | | | | F2 |
| m/s² | Acceleration for online correction in tool dir. | | | | NEW CONF |
| C08 | | | | - | DOUBLE |
| - | 3 | 100., 100., 100.,100., 100., 100.... | 1.0e-3 | - | 7/2 |

| | | | | | |
|---|---|---|---|---|---|
| **21200** | **LIFTFAST_DIST** | | | | K1 |
| mm | Traversing distance on rapid lift from contour | | | | POWER ON |
| C09 | | | | - | DOUBLE |
| - | - | 0.1,0.1,0.1,0.1,0.1,0.1,0.1, 0.1,0.1,0.1... | - | - | 7/2 |

| | | | | | |
|---|---|---|---|---|---|
| **21202** | **LIFTFAST_WITH_MIRROR** | | | | K1 |
| - | Rapid retract with mirrorring | | | | POWER ON |
| C09 | | | | - | BOOLEAN |
| - | - | FALSE,FALSE,FALSE, FALSE,FALSE,FALSE... | - | - | 7/2 |

| | | | | | |
|---|---|---|---|---|---|
| **21204** | **LIFTFAST_STOP_COND** | | | | PGA |
| - | Stop behavior with fast retraction | | | | NEW CONF |
| C09 | | | | - | DWORD |
| - | - | 0,0,0,0,0,0,0,0,0,0,0,0,0,0,0,0 | - | - | 7/2 |

© Siemens AG 2004 All Rights Reserved

| | | | | | |
|---|---|---|---|---|---|
| **21210** | **SETINT_ASSIGN_FASTIN** | | | | K1 |
| - | HW assignment of ext. NCK input byte for NC progr. interrupts | | | | POWER ON |
| C01, C09 | | | | - | DWORD |
| - | - | 1,1,1,1,1,1,1,1,1,1,1,1,1,1,1,1 | - | - | 7/2 |

| | | | | | |
|---|---|---|---|---|---|
| **21220** | **MULTFEED_ASSIGN_FASTIN** | | | | V1 |
| - | NCK I/Os for 'multiple feedrates in one block' | | | | POWER ON |
| C01, C09 | | | | - | DWORD |
| - | - | 0,0,0,0,0,0,0,0,0,0,0,0,0,0,0,0 | - | - | 7/2 |

| | | | | | |
|---|---|---|---|---|---|
| **21230** | **MULTFEED_STORE_MASK** | | | | V1 |
| - | Store input signal of function 'Multiple feedrates in one block' | | | | POWER ON |
| C01, C09 | | | | - | BYTE |
| - | - | 0,0,0,0,0,0,0,0,0,0,0,0,0,0,0,0 | - | - | 7/2 |

| | | | | | |
|---|---|---|---|---|---|
| **21240** | **PREVENT_SYNACT_LOCK_CHAN** | | | | FBSY |
| - | Protected synchronized actions | | | | POWER ON |
| C01, C09 | | | | - | DWORD |
| - | 2 | -1, -1,-1, -1,-1, -1,-1, -1,-1, -1... | -1 | 255 | 7/2 |

| | | | | | |
|---|---|---|---|---|---|
| **21300** | **COUPLE_AXIS_1** | | | | S3 |
| - | Synchr.spindle pair def, mach.axis no: follow.sp[0], lead.sp[1] | | | | POWER ON |
| C09 | | | | - | BYTE |
| - | 2 | 0, 0,0, 0,0, 0,0, 0,0, 0,0, 0,0, 0... | 0 | 31 | 7/2 |

| | | | | | |
|---|---|---|---|---|---|
| **21310** | **COUPLING_MODE_1** | | | | S3 |
| - | Type of coupling in synchronous spindle operation | | | | POWER ON |
| C03, C09 | | | | - | BYTE |
| - | - | 1,1,1,1,1,1,1,1,1,1,1,1,1,1,1,1 | 0 | 2 | 7/2 |

| | | | | | |
|---|---|---|---|---|---|
| **21320** | **COUPLE_BLOCK_CHANGE_CTRL_1** | | | | S3 |
| - | Block change behavior in synchronous spindle operation | | | | POWER ON |
| C09 | | | | - | BYTE |
| - | - | 3,3,3,3,3,3,3,3,3,3,3,3,3,3,3,3 | 0 | 3 | 7/2 |

© Siemens AG 2004 All Rights Reserved

| | | | | | |
|---|---|---|---|---|---|
| **21330** | **COUPLE_RESET_MODE_1** | | | | S3 |
| - | Coupling abort behavior | | | | POWER ON |
| C03, C09 | | | | - | DWORD |
| - | - | 1,1,1,1,1,1,1,1,1,1,1,1,1,1,1,1 | 0 | 0x3FF | 7/2 |

| | | | | | |
|---|---|---|---|---|---|
| **21340** | **COUPLE_IS_WRITE_PROT_1** | | | | S3 |
| - | Coupling parameters cannot be altered | | | | POWER ON |
| C09 | | | | - | BOOLEAN |
| - | - | FALSE,FALSE,FALSE,FALSE,FALSE,FALSE... | - | - | 7/2 |

| | | | | | |
|---|---|---|---|---|---|
| **21380** | **ESR_DELAY_TIME1** | | | | M3 |
| s | Delay time ESR axes | | | | NEW CONF |
| EXP, N09 | | | | - | DOUBLE |
| - | - | 0.0,0.0,0.0,0.0,0.0,0.0,0.0,0.0,0.0,0.0... | - | - | 7/2 |

| | | | | | |
|---|---|---|---|---|---|
| **21381** | **ESR_DELAY_TIME2** | | | | M3 |
| s | ESR time for IPO controlled braking | | | | NEW CONF |
| EXP, N09 | | | | - | DOUBLE |
| - | - | 0.0,0.0,0.0,0.0,0.0,0.0,0.0,0.0,0.0,0.0... | - | - | 7/2 |

## 2.6.2 Machine data for grinding function

| | | | | | |
|---|---|---|---|---|---|
| **21500** | **TRACLG_GRINDSPI_VERT_OFFSET** | | | | S8 |
| mm | Vertical position offset of grinding axis in centerless grinding | | | | POWER ON |
| C07 | | | | - | DOUBLE |
| - | - | 0.,0.,0.,0.,0.,0.,0.,0.,0.,0.,0.,0.,0.,0.,0.,0.... | - | - | 7/2 |

| | | | | | |
|---|---|---|---|---|---|
| **21501** | **TRACLG_GRINDSPI_HOR_OFFSET** | | | | S8 |
| mm | Horiz. position offset of grinding axis in centerless grinding | | | | POWER ON |
| C07 | | | | - | DOUBLE |
| - | - | 0.,0.,0.,0.,0.,0.,0.,0.,0.,0.,0.,0.,0.,0.,0.,0.... | - | - | 7/2 |

© Siemens AG 2004 All Rights Reserved

| | | | | | |
|---|---|---|---|---|---|
| **21502** | **TRACLG_CTRLSPI_VERT_OFFSET** | | | | S8 |
| mm | Vert. position offset of regulating axis in centerless grinding | | | | POWER ON |
| C07 | | | | - | DOUBLE |
| - | - | 0.,0.,0.,0.,0.,0.,0.,0.,0.,0.,0.,0.,0.... | - | - | 7/2 |

| | | | | | |
|---|---|---|---|---|---|
| **21504** | **TRACLG_SUPPORT_VERT_OFFSET** | | | | S8 |
| mm | Vertical offset of work blade in centerless grinding | | | | POWER ON |
| C07 | | | | - | DOUBLE |
| - | - | 0.,0.,0.,0.,0.,0.,0.,0.,0.,0.,0.,0.,0.... | - | - | 7/2 |

| | | | | | |
|---|---|---|---|---|---|
| **21506** | **TRACLG_SUPPORT_HOR_OFFSET** | | | | S8 |
| mm | Horizontal offset of work blade in centerless grinding | | | | POWER ON |
| C07 | | | | - | DOUBLE |
| - | - | 0.,0.,0.,0.,0.,0.,0.,0.,0.,0.,0.,0.,0.... | - | - | 7/2 |

| | | | | | |
|---|---|---|---|---|---|
| **21508** | **TRACLG_VERT_DIR_SUPPORTAX_1** | | | | S8 |
| - | Vertical component of work blade direction vector for Q1 | | | | POWER ON |
| C07 | | | | - | DOUBLE |
| - | - | 1.,1.,1.,1.,1.,1.,1.,1.,1.,1.,1.,1.,1.... | - | - | 7/2 |

| | | | | | |
|---|---|---|---|---|---|
| **21510** | **TRACLG_HOR_DIR_SUPPORTAX_1** | | | | S8 |
| - | Horizontal component of work blade direction vector for Q1 | | | | POWER ON |
| C07 | | | | - | DOUBLE |
| - | - | 0.,0.,0.,0.,0.,0.,0.,0.,0.,0.,0.,0.,0.... | - | - | 7/2 |

| | | | | | |
|---|---|---|---|---|---|
| **21512** | **TRACLG_VERT_DIR_SUPPORTAX_2** | | | | S8 |
| - | Vertical component of work blade direction vector for Q2 | | | | POWER ON |
| C07 | | | | - | DOUBLE |
| - | - | 0.,0.,0.,0.,0.,0.,0.,0.,0.,0.,0.,0.,0.... | - | - | 7/2 |

| | | | | | |
|---|---|---|---|---|---|
| **21514** | **TRACLG_HOR_DIR_SUPPORTAX_2** | | | | S8 |
| - | Horizontal component of work blade direction vector for Q2 | | | | POWER ON |
| C07 | | | | - | DOUBLE |
| - | - | 1.,1.,1.,1.,1.,1.,1.,1.,1.,1.,1.,1.,1.... | - | - | 7/2 |

© Siemens AG 2004 All Rights Reserved

| 21516 | TRACLG_SUPPORT_LEAD_ANGLE | | | | S8 |
|---|---|---|---|---|---|
| degrees | Lead angle of work blade in centerless grinding | | | | POWER ON |
| C07 | | | | - | DOUBLE |
| - | - | 0.,0.,0.,0.,0.,0.,0.,0.,0.,0.,0.,0.,0.... | -90. | 90. | 7/2 |

| 21518 | TRACLG_CONTACT_UPPER_LIMIT | | | | S8 |
|---|---|---|---|---|---|
| mm | Upper contact limit of work blade with work in centerl. grinding | | | | POWER ON |
| C07 | | | | - | DOUBLE |
| - | - | 0.,0.,0.,0.,0.,0.,0.,0.,0.,0.,0.,0.,0.... | - | - | 7/2 |

| 21520 | TRACLG_CONTACT_LOWER_LIMIT | | | | S8 |
|---|---|---|---|---|---|
| mm | Lower contact limit of work blade with work in centerl. grinding | | | | POWER ON |
| C07 | | | | - | DOUBLE |
| - | - | 0.,0.,0.,0.,0.,0.,0.,0.,0.,0.,0.,0.,0.... | - | - | 7/2 |

| 21522 | TRACLG_GRINDSPI_NR | | | | S8 |
|---|---|---|---|---|---|
| - | Definition of grinding spindle for centerless grinding | | | | POWER ON |
| C07 | | | | - | BYTE |
| - | - | 2,2,2,2,2,2,2,2,2,2,2,2,2,2,2,2 | 1 | 20 | 7/2 |

| 21524 | TRACLG_CTRLSPI_NR | | | | S8 |
|---|---|---|---|---|---|
| - | Definition of regulating spindle for centerless grinding | | | | POWER ON |
| C07 | | | | - | BYTE |
| - | - | 1,1,1,1,1,1,1,1,1,1,1,1,1,1,1,1 | 1 | 20 | 7/2 |

| 21526 | TRACLG_G0_IS_SPECIAL | | | | S8 |
|---|---|---|---|---|---|
| - | Special logic for G0 in centerless grinding | | | | POWER ON |
| C07 | | | | - | BOOLEAN |
| - | - | TRUE,TRUE,TRUE,TRUE,TRUE,TRUE,TRUE... | - | - | 7/2 |

© Siemens AG 2004 All Rights Reserved

## 2.6.2 Channel auxiliary function settings

| | | | | | |
|---|---|---|---|---|---|
| **22000** | **AUXFU_ASSIGN_GROUP** | | | | H2 |
| - | Auxiliary function group | | | | POWER ON |
| C04 | | | | - | BYTE |
| - | 255 | 1, 1, 1, 1, 1, 1, 1, 1, 1, 1, 1, 1, 1, 1, 1, 1, 1, 1, 1, 1,1, 1... | 1 | 64 | 7/2 |

| | | | | | |
|---|---|---|---|---|---|
| **22010** | **AUXFU_ASSIGN_TYPE** | | | | H2 |
| - | Auxiliary function type | | | | POWER ON |
| C04 | | | | - | STRING |
| - | 255 | "", "", "", "", "", "", "", "", "", "", "", "", "", "", "", ""... | - | - | 7/2 |

| | | | | | |
|---|---|---|---|---|---|
| **22020** | **AUXFU_ASSIGN_EXTENSION** | | | | H2 |
| - | Auxiliary function extension | | | | POWER ON |
| C04 | | | | - | BYTE |
| - | 255 | 0, 0, 0, 0, 0, 0, 0, 0, 0, 0, 0, 0, 0, 0, 0, 0, 0, 0, 0, 0, 0... | 0 | 99 | 7/2 |

| | | | | | |
|---|---|---|---|---|---|
| **22030** | **AUXFU_ASSIGN_VALUE** | | | | H2 |
| - | Auxiliary function value | | | | POWER ON |
| C04 | | | | - | DWORD |
| - | 255 | 0, 0, 0, 0, 0, 0, 0, 0, 0, 0, 0, 0, 0, 0, 0, 0, 0, 0, 0, 0, 0... | - | - | 7/2 |

| | | | | | |
|---|---|---|---|---|---|
| **22035** | **AUXFU_ASSIGN_SPEC** | | | | H2 |
| - | Output specification | | | | POWER ON |
| C04 | | | | - | DWORD |
| - | 255 | 0, 0, 0, 0, 0, 0, 0, 0, 0, 0, 0, 0, 0, 0, 0, 0, 0, 0, 0, 0, 0... | - | - | 7/2 |

| | | | | | |
|---|---|---|---|---|---|
| **22040** | **AUXFU_PREDEF_GROUP** | | | | H2 |
| - | Predefined auxiliary function groups | | | | POWER ON |
| C04 | | | | - | BYTE |
| - | 33 | 1, 1, 1, 1, 1, 1, 2, 2, 2, 2, 2, 4, 4, 4, 4, 4, 3, 1, 1, 1... | 0 | 64 | 7/2 |

© Siemens AG 2004 All Rights Reserved

| | | | | | |
|---|---|---|---|---|---|
| **22050** | **AUXFU_PREDEF_TYPE** | | | | H2 |
| - | Predefined auxiliary function type | | | | POWER ON |
| C04 | | | | - | STRING |
| - | 33 | "M", "M", "M", "M", "M", "M", "M", "M", "M", "M","M", "M", "M"... | - | - | 7/2 |

| | | | | | |
|---|---|---|---|---|---|
| **22060** | **AUXFU_PREDEF_EXTENSION** | | | | H2 |
| - | Predefined auxiliary function extension | | | | POWER ON |
| C04 | | | | - | BYTE |
| - | 33 | 0, 0, 0, 0, 0, 1, 1, 1, 1, 1, 1, 1, 1, 1, 1, 1, 1, 1, 1, 0, 0, 0... | 0 | 99 | 7/2 |

| | | | | | |
|---|---|---|---|---|---|
| **22070** | **AUXFU_PREDEF_VALUE** | | | | H2 |
| - | Predefined auxiliary function value | | | | POWER ON |
| C04 | | | | - | DWORD |
| - | 33 | 0, 1, 2, 17, 30, 6, 3, 4, 5, 19, 70, 40, 41, 42, 43, 44, 45, -1... | - | - | 7/2 |

| | | | | | |
|---|---|---|---|---|---|
| **22080** | **AUXFU_PREDEF_SPEC** | | | | H2 |
| - | Output specification | | | | POWER ON |
| C04 | | | | - | DWORD |
| - | 33 | 0x81, 0x81, 0x81, 0x81, 0x81, 0x21, 0x21, 0x21, 0x21, 0x21, 0x21, 0x21,0x21... | - | - | 7/2 |

| | | | | | |
|---|---|---|---|---|---|
| **22100** | **AUXFU_QUICK_BLOCKCHANGE** | | | | H2 |
| - | Block change delay with quick auxiliary functions. | | | | POWER ON |
| C04 | | | | - | DWORD |
| - | - | 0,0,0,0,0,0,0,0,0,0,0,0,0,0,0,0 | 0 | 1 | 7/2 |

| | | | | | |
|---|---|---|---|---|---|
| **22110** | **AUXFU_H_TYPE_INT** | | | | H2 |
| - | Type of H auxiliary functions is integer. | | | | POWER ON |
| C11, C04 | | | | - | DWORD |
| - | - | 0,0,0,0,0,0,0,0,0,0,0,0,0,0,0,0 | 0 | 1 | 7/2 |

© Siemens AG 2004 All Rights Reserved

| 22200 | AUXFU_M_SYNC_TYPE | | | | H2 |
|---|---|---|---|---|---|
| - | Output time of M functions | | | | POWER ON |
| C04 | | | | - | BYTE |
| - | - | 0,0,0,0,0,0,0,0,0,0,0,0,0,0,0,0 | 0 | 3 | 7/2 |

| 22210 | AUXFU_S_SYNC_TYPE | | | | H2 |
|---|---|---|---|---|---|
| - | Output time of S functions (see MD22200 for values) | | | | POWER ON |
| C04 | | | | - | BYTE |
| - | - | 0,0,0,0,0,0,0,0,0,0,0,0,0,0,0,0 | 0 | 4 | 7/2 |

| 22220 | AUXFU_T_SYNC_TYPE | | | | H2 |
|---|---|---|---|---|---|
| - | Output time for T functions (see MD22200 for values) | | | | POWER ON |
| C11, C04 | | | | - | BYTE |
| - | - | 0,0,0,0,0,0,0,0,0,0,0,0,0,0,0,0 | 0 | 4 | 7/2 |

| 22230 | AUXFU_H_SYNC_TYPE | | | | H2 |
|---|---|---|---|---|---|
| - | Output time for H functions (see MD22200 for values) | | | | POWER ON |
| C04 | | | | - | BYTE |
| - | - | 0,0,0,0,0,0,0,0,0,0,0,0,0,0,0,0 | 0 | 3 | 7/2 |

| 22240 | AUXFU_F_SYNC_TYPE | | | | H2 |
|---|---|---|---|---|---|
| - | Output time for F functions (see MD22200 for values) | | | | POWER ON |
| C04 | | | | - | BYTE |
| - | - | 3,3,3,3,3,3,3,3,3,3,3,3,3,3,3,3 | 0 | 4 | 7/2 |

| 22250 | AUXFU_D_SYNC_TYPE | | | | H2 |
|---|---|---|---|---|---|
| - | Output time for D functions (see MD22200 for values) | | | | POWER ON |
| C04 | | | | - | BYTE |
| - | - | 0,0,0,0,0,0,0,0,0,0,0,0,0,0,0,0 | 0 | 4 | 7/2 |

| 22252 | AUXFU_DL_SYNC_TYPE | | | | H2 |
|---|---|---|---|---|---|
| - | Output time of DL functions | | | | POWER ON |
| C04 | | | | - | BYTE |
| - | - | 0,0,0,0,0,0,0,0,0,0,0,0,0,0,0,0 | 0 | 4 | 7/2 |

© Siemens AG 2004 All Rights Reserved

| | | | | | |
|---|---|---|---|---|---|
| **22254** | **AUXFU_ASSOC_M0_VALUE** | | | | H2 |
| - | Additional M function to stop a program | | | | POWER ON |
| C01, C03, C10 | | | | - | DWORD |
| - | - | -1,-1,-1,-1,-1,-1,-1,-1,-1,-1,-1,-1,-1,-1,-1... | - | - | 7/2 |

| | | | | | |
|---|---|---|---|---|---|
| **22256** | **AUXFU_ASSOC_M1_VALUE** | | | | H2 |
| - | Additional M function for conditional stop | | | | POWER ON |
| C01, C03, C10 | | | | - | DWORD |
| - | - | -1,-1,-1,-1,-1,-1,-1,-1,-1,-1,-1,-1,-1,-1,-1... | - | - | 7/2 |

| | | | | | |
|---|---|---|---|---|---|
| **22400** | **S_VALUES_ACTIVE_AFTER_RESET** | | | | S1 |
| - | S function effective after RESET | | | | POWER ON |
| C04, C03, C05 | | | | - | BOOLEAN |
| - | - | FALSE,FALSE,FALSE,FALSE,FALSE,FALSE... | - | - | 7/2 |

| | | | | | |
|---|---|---|---|---|---|
| **22410** | **F_VALUES_ACTIVE_AFTER_RESET** | | | | V1 |
| - | F function effective after RESET | | | | POWER ON |
| C04, C03, C05 | | | | - | BOOLEAN |
| - | - | FALSE,FALSE,FALSE,FALSE,FALSE,FALSE... | - | - | 7/2 |

| | | | | | |
|---|---|---|---|---|---|
| **22420** | **FGROUP_DEFAULT_AXES** | | | | FBFA |
| - | Default setting for FGROUP command | | | | POWER ON |
| C11 | | | | - | BYTE |
| - | 8 | 0, 0, 0, 0, 0, 0, 0, 0,0, 0, 0, 0, 0, 0, 0, 0, 0... | - | - | 7/7 |

| | | | | | |
|---|---|---|---|---|---|
| **22510** | **GCODE_GROUPS_TO_PLC** | | | | K1 |
| - | G codes output at NCK-PLC interface on block change/RESET | | | | POWER ON |
| C04 | | | | - | BYTE |
| - | 8 | 0, 0, 0, 0, 0, 0, 0, 0,0, 0, 0, 0, 0, 0, 0, 0, 0... | - | - | 7/2 |

| | | | | | |
|---|---|---|---|---|---|
| **22512** | **EXTERN_GCODE_GROUPS_TO_PLC** | | | | FBFA |
| - | Send G commands of an external NC language to PLC | | | | POWER ON |
| C11, C04 | | | | - | BYTE |
| - | 8 | 0, 0, 0, 0, 0, 0, 0, 0,0, 0, 0, 0, 0, 0, 0, 0, 0... | - | - | 7/2 |

© Siemens AG 2004 All Rights Reserved

| | | | | | |
|---|---|---|---|---|---|
| **22515** | **GCODE_GROUPS_TO_PLC_MODE** | | | | FBFA |
| - | Behavior of G group transfer to PLC | | | | POWER ON |
| C04 | | | | - | DWORD |
| - | - | 0,0,0,0,0,0,0,0,0,0,0,0,0,0,0,0 | 0 | 1 | 7/2 |

| | | | | | |
|---|---|---|---|---|---|
| **22530** | **TOCARR_CHANGE_M_CODE** | | | | W1 |
| - | M code at change of toolholder | | | | POWER ON |
| C04 | | | | - | DWORD |
| - | - | 0,0,0,0,0,0,0,0,0,0,0,0,0,0,0,0 | -99999999 | 99999999 | 7/2 |

| | | | | | |
|---|---|---|---|---|---|
| **22532** | **GEOAX_CHANGE_M_CODE** | | | | K2 |
| - | M code at change of geo axes | | | | POWER ON |
| C04 | | | | - | DWORD |
| - | - | 0,0,0,0,0,0,0,0,0,0,0,0,0,0,0,0 | 0 | 99999999 | 7/2 |

| | | | | | |
|---|---|---|---|---|---|
| **22534** | **TRAFO_CHANGE_M_CODE** | | | | M1 |
| - | M code at change of transformation | | | | POWER ON |
| C04 | | | | - | DWORD |
| - | - | 0,0,0,0,0,0,0,0,0,0,0,0,0,0,0,0 | 0 | 99999999 | 7/2 |

| | | | | | |
|---|---|---|---|---|---|
| **22550** | **TOOL_CHANGE_MODE** | | | | W1 |
| - | New tool compensation for M function | | | | POWER ON |
| C01, C11, C04, C09 | | | | - | BYTE |
| - | - | 0,0,0,0,0,0,0,0,0,0,0,0,0,0,0,0 | 0 | 1 | 7/2 |

| | | | | | |
|---|---|---|---|---|---|
| **22560** | **TOOL_CHANGE_M_CODE** | | | | W1 |
| - | M function for tool change | | | | POWER ON |
| C01, C04, C09 | | | | - | DWORD |
| - | - | 6,6,6,6,6,6,6,6,6,6,6,6,6,6,6,6 | 0 | 99999999 | 7/2 |

| | | | | | |
|---|---|---|---|---|---|
| **22562** | **TOOL_CHANGE_ERROR_MODE** | | | | W1 |
| - | Response to tool change errors | | | | POWER ON |
| C09 | | | | - | DWORD |
| - | - | 0x0,0x0,0x0,0x0,0x0,0x0,0x0,0x0,0x0,0x0,0x0... | 0 | 0x7F | 7/2 |

© Siemens AG 2004 All Rights Reserved

| | | | | | |
|---|---|---|---|---|---|
| **22600** | **SERUPRO_SPEED_MODE** | | | | K1 |
| - | Speed for block search run type 5 | | | | IMMEDIATELY |
| EXP | | | | - | DWORD |
| - | - | 1,1,1,1,1,1,1,1,1,1,1,1,1,1,1,1,1 | - | - | 2/2 |

| | | | | | |
|---|---|---|---|---|---|
| **22601** | **SERUPRO_SPEED_FACTOR** | | | | K1 |
| - | Speed factor for search run type 5 | | | | IMMEDIATELY |
| EXP | | | | - | DOUBLE |
| - | - | 10.0,10.0,10.0,10.0,10.0,10.0,10.0... | 1.0 | - | 2/2 |

| | | | | | |
|---|---|---|---|---|---|
| **22620** | **START_MODE_MASK_PRT** | | | | K1 |
| - | Initial setting on special starts | | | | RESET |
| EXP, C03 | | | | - | DWORD |
| - | - | 0x400,0x400,0x400,0x400,0x400,0x400... | 0 | 0xFFFF | 7/2 |

| | | | | | |
|---|---|---|---|---|---|
| **22621** | **ENABLE_START_MODE_MASK_PRT** | | | | K1 |
| - | Enables $MC_START_MODE_MASK_PRT | | | | RESET |
| EXP, C03 | | | | - | DWORD |
| - | - | 0x0,0x0,0x0,0x0,0x0,0x0,0x0,0x0,0x0,0x0,0x0... | 0 | 0x1 | 7/2 |

| | | | | | |
|---|---|---|---|---|---|
| **22622** | **DISABLE_PLC_START** | | | | K1 |
| - | Enable part program start via PLC | | | | POWER ON |
| EXP | | | | - | DWORD |
| - | - | 0x0,0x0,0x0,0x0,0x0,0x0,0x0,0x0,0x0,0x0,0x0... | - | - | 2/2 |

| | | | | | |
|---|---|---|---|---|---|
| **22680** | **AUTO_IPTR_LOCK** | | | | K1 |
| - | Disable interrupt pointer | | | | RESET |
| EXP, C03 | | | | - | DWORD |
| - | - | 0x0,0x0,0x0,0x0,0x0,0x0,0x0,0x0,0x0,0x0,0x0... | 0 | 0x3 | 7/2 |

| | | | | | |
|---|---|---|---|---|---|
| **22700** | **TRACE_STARTTRACE_EVENT** | | | | BA,S5,FBSY |
| - | Diagnostic data rec. starts with event TRACE_STARTTRACE_EVENT. | | | | POWER ON |
| EXP, C06 | | | | NBUP | STRING |
| - | -1 | | - | - | 2/2 |

© Siemens AG 2004 All Rights Reserved

| | | | | | |
|---|---|---|---|---|---|
| **22702** | **TRACE_STARTTRACE_STEP** | | | | BA,S5,FBSY |
| - | Further condition for starting trace rec. (e.g. block number) | | | | POWER ON |
| EXP, C06 | | | | NBUP | STRING |
| - | 2 | "","","","","","","","","","","","... | - | - | 2/2 |

| | | | | | |
|---|---|---|---|---|---|
| **22704** | **TRACE_STOPTRACE_EVENT** | | | | BA,S5,FBSY |
| - | Cond. f. stop/tracefile record | | | | POWER ON |
| EXP, C06 | | | | NBUP | STRING |
| - | -1 | "CLEARCANCELALARM_M","CLEARCANCELALARM_M"... | - | - | 2/2 |

| | | | | | |
|---|---|---|---|---|---|
| **22706** | **TRACE_STOPTRACE_STEP** | | | | BA,S5,FBSY |
| - | CommandSequenzStep with which the recording ends | | | | POWER ON |
| EXP, C06 | | | | NBUP | STRING |
| - | 2 | "","","","","","","","","","","","... | - | - | 2/2 |

| | | | | | |
|---|---|---|---|---|---|
| **22708** | **TRACE_SCOPE_MASK** | | | | BA,S5,FBSY |
| - | Selects the contents of the trace file | | | | POWER ON |
| EXP, C06 | | | | NBUP | STRING |
| - | -1 | | - | - | 2/2 |

| | | | | | |
|---|---|---|---|---|---|
| **22710** | **TRACE_VARIABLE_NAME** | | | | BA,S5,FBSY |
| - | Trace extent of the diagnosis | | | | POWER ON |
| - | | | | NBUP | STRING |
| - | 10 | "BL_NR", "TR_POINT", "EV_TYPE", "EV_SRC", "CS_ASTEP"... | - | - | 2/2 |

| | | | | | |
|---|---|---|---|---|---|
| **22712** | **TRACE_VARIABLE_INDEX** | | | | BA,S5,FBSY |
| - | Index for trace recording | | | | POWER ON |
| EXP, C06 | | | | NBUP | DWORD |
| - | 10 | 0x0, 0x0, 0x0, 0x0, 0x0, 0x0, 0x0, 0x0, 0x0, 0x0... | 0 | 0xFFFF | 2/2 |

© Siemens AG 2004 All Rights Reserved

| | | | | | |
|---|---|---|---|---|---|
| **22714** | **MM_TRACE_DATA_FUNCTION** | | | | BA,S5,FBSY |
| - | Activating diagnostics | | | | POWER ON |
| EXP, C02, C06 | | | | NBUP | DWORD |
| - | - | 0x0,0x0,0x0,0x0,0x0,0x0,0x0,0x0,0x0,0x0... | 0 | 0xFFFF | 2/2 |

| | | | | | |
|---|---|---|---|---|---|
| **22800** | **TRACE_COMPRESSOR_OUTPUT** | | | | D1 |
| - | Activation of trace output for compressor | | | | POWER ON |
| EXP, C01 | | | | NBUP | BYTE |
| - | - | 0,0,0,0,0,0,0,0,0,0,0,0,0,0,0,0 | - | - | 0/0 |

| | | | | | |
|---|---|---|---|---|---|
| **22900** | **STROKE_CHECK_INSIDE** | | | | FBFA |
| - | Direction (inside/outside) in which protection zone is effective | | | | POWER ON |
| EXP, C01, C11 | | | | - | BOOLEAN |
| - | - | FALSE,FALSE,FALSE,FALSE,FALSE,FALSE,FALSE,.. | - | - | 7/2 |

| | | | | | |
|---|---|---|---|---|---|
| **22910** | **WEIGHTING_FACTOR_FOR_SCALE** | | | | FBFA |
| - | Input resolution for scaling factor | | | | POWER ON |
| EXP, C01, C11 | | | | - | BOOLEAN |
| - | - | FALSE,FALSE,FALSE,FALSE,FALSE,FALSE,FALSE,.. | - | - | 7/2 |

| | | | | | |
|---|---|---|---|---|---|
| **22914** | **AXES_SCALE_ENABLE** | | | | FBFA |
| - | Activation for axial scaling factor ( G51 ) | | | | POWER ON |
| EXP, C01, C11 | | | | - | BOOLEAN |
| - | - | FALSE,FALSE,FALSE,FALSE,FALSE,FALSE,FALSE,.. | - | - | 7/2 |

| | | | | | |
|---|---|---|---|---|---|
| **22920** | **EXTERN_FIXED_FEEDRATE_F1_ON** | | | | FBFA |
| - | Activate fixed feedrate F1 - F9 | | | | POWER ON |
| EXP, C01, C11 | | | | - | BOOLEAN |
| - | - | FALSE,FALSE,FALSE,FALSE,FALSE,FALSE,FALSE,.. | - | - | 7/2 |

© Siemens AG 2004 All Rights Reserved

| | | | | | |
|---|---|---|---|---|---|
| **22930** | **EXTERN_PARALLEL_GEOAX** | | | | FBFA |
| - | Assignment parallel channel - GEO axis | | | | POWER ON |
| EXP, C01, C11 | | | | - | BYTE |
| - | 3 | 0, 0, 0,0, 0, 0,0, 0, 0,0, 0, 0... | 0 | 20 | 7/2 |

| | | | | | |
|---|---|---|---|---|---|
| **24000** | **FRAME_ADD_COMPONENTS** | | | | K2 |
| - | Frame components for G58 and G59 | | | | POWER ON |
| C03 | | | | - | BOOLEAN |
| - | - | FALSE,FALSE,FALSE, FALSE,FALSE,FALSE. .. | - | - | 7/7 |

| | | | | | |
|---|---|---|---|---|---|
| **24002** | **CHBFRAME_RESET_MASK** | | | | K2 |
| - | Active channel-specific base frames after reset | | | | RESET |
| C03 | | | | - | DWORD |
| - | - | 0xFFFF,0xFFFF,0xFFFF,0xFFFF,0xFFFF... | 0 | 0xFFFF | 7/2 |

| | | | | | |
|---|---|---|---|---|---|
| **24004** | **CHBFRAME_POWERON_MASK** | | | | FBFA |
| - | Reset channel-specific base frames after power on | | | | POWER ON |
| C03 | | | | - | DWORD |
| - | - | 0x0,0x0,0x0,0x0,0x0,0x0,0x0,0x0,0x0,0x0... | 0 | 0xFFFF | 7/2 |

| | | | | | |
|---|---|---|---|---|---|
| **24006** | **CHSFRAME_RESET_MASK** | | | | K2 |
| - | Active system frames after reset | | | | RESET |
| C03 | | | | - | DWORD |
| - | - | 0x1,0x1,0x1,0x1,0x1,0x1,0x1,0x1,0x1,0x1... | 0 | 0x0000007F | 7/2 |

| | | | | | |
|---|---|---|---|---|---|
| **24007** | **CHSFRAME_RESET_CLEAR_MASK** | | | | K2 |
| - | Deletion of system frames after reset | | | | RESET |
| C03 | | | | - | DWORD |
| - | - | 0x0,0x0,0x0,0x0,0x0,0x0,0x0,0x0,0x0,0x0... | 0 | 0x0000007F | 7/2 |

| | | | | | |
|---|---|---|---|---|---|
| **24008** | **CHSFRAME_POWERON_MASK** | | | | K2 |
| - | Reset channel system frames after power on | | | | POWER ON |
| C03 | | | | - | DWORD |
| - | - | 0x0,0x0,0x0,0x0,0x0,0x0,0x0,0x0,0x0,0x0... | 0 | 0x0000007F | 7/2 |

© Siemens AG 2004 All Rights Reserved

| | | | | | |
|---|---|---|---|---|---|
| **24010** | **PFRAME_RESET_MODE** | | | | K2 |
| - | Reset mode for programmable frame | | | | POWER ON |
| C03 | | | | - | DWORD |
| - | - | 0,0,0,0,0,0,0,0,0,0,0,0,0,0,0,0 | 0 | 1 | 7/2 |

| | | | | | |
|---|---|---|---|---|---|
| **24020** | **FRAME_SUPPRESS_MODE** | | | | K2 |
| - | Positions for frame suppression | | | | POWER ON |
| C03 | | | | - | DWORD |
| - | - | 0x0,0x0,0x0,0x0,0x0,0x0,0x0,0x0,0x0,0x0... | 0 | 0x0000003 | 7/2 |

| | | | | | |
|---|---|---|---|---|---|
| **24030** | **FRAME_ACS_SET** | | | | K2 |
| - | Adjustment of SZS coordinate system | | | | POWER ON |
| C03 | | | | - | DWORD |
| - | - | 0,0,0,0,0,0,0,0,0,0,0,0,0,0,0,0 | 0 | 1 | 7/2 |

| | | | | | |
|---|---|---|---|---|---|
| **24040** | **FRAME_ADAPT_MODE** | | | | K2 |
| - | Adaptation of active frames | | | | POWER ON |
| C03 | | | | - | DWORD |
| - | - | 0x0,0x0,0x0,0x0,0x0,0x0,0x0,0x0,0x0,0x0... | 0 | 0x0000007 | 7/2 |

| | | | | | |
|---|---|---|---|---|---|
| **24050** | **FRAME_SAA_MODE** | | | | K2 |
| - | Save and activate data management frames | | | | POWER ON |
| C03 | | | | - | DWORD |
| - | - | 0x0,0x0,0x0,0x0,0x0,0x0,0x0,0x0,0x0,0x0... | 0 | 0x0000003 | 7/2 |

## 2.6.3 Transformation definitions in channel

| | | | | | |
|---|---|---|---|---|---|
| **24100** | **TRAFO_TYPE_1** | | | | F2 |
| - | Definition of transformation 1 in channel | | | | NEW CONF |
| C07 | | | | - | DWORD |
| - | - | 0,0,0,0,0,0,0,0,0,0,0,0,0,0,0,0 | - | - | 7/7 |

© Siemens AG 2004 All Rights Reserved

| | | | | | |
|---|---|---|---|---|---|
| **24110** | **TRAFO_AXES_IN_1** | | | | F2 |
| - | Axis assignment for transformation | | | | NEW CONF |
| C07 | | | | - | BYTE |
| - | 20 | 1, 2, 3, 4, 5, 0, 0, 0, 0, 0, 0, 0, 0, 0, 0, 0, 0, 0, 0, 0, 0, 0, 0... | 0 | 20 | 7/7 |

| | | | | | |
|---|---|---|---|---|---|
| **24120** | **TRAFO_GEOAX_ASSIGN_TAB_1** | | | | F2 |
| - | Assignment GEO axis to channel axis for transformation 1 | | | | NEW CONF |
| C07 | | | | - | BYTE |
| - | 3 | 0, 0, 0,0, 0, 0,0, 0, 0,0, 0, 0... | 0 | 20 | 7/7 |

| | | | | | |
|---|---|---|---|---|---|
| **24130** | **TRAFO_INCLUDES_TOOL_1** | | | | M1,F2 |
| - | Tool handling with 1st active transformation | | | | NEW CONF |
| C07 | | | | - | BOOLEAN |
| - | - | TRUE,TRUE,TRUE,TRUE,TRUE,TRUE,TRUE,TRUE... | - | - | 7/7 |

| | | | | | |
|---|---|---|---|---|---|
| **24200** | **TRAFO_TYPE_2** | | | | F2 |
| - | Definition of transformation 2 in channel | | | | NEW CONF |
| C07 | | | | - | DWORD |
| - | - | 0,0,0,0,0,0,0,0,0,0,0,0,0,0,0,0 | - | - | 7/7 |

| | | | | | |
|---|---|---|---|---|---|
| **24210** | **TRAFO_AXES_IN_2** | | | | F2 |
| - | Axis assignment for transformation 2 | | | | NEW CONF |
| C07 | | | | - | BYTE |
| - | 20 | 1, 2, 3, 4, 5, 0, 0, 0, 0, 0, 0, 0, 0, 0, 0, 0, 0, 0, 0, 0, 0, 0, 0... | 0 | 20 | 7/7 |

| | | | | | |
|---|---|---|---|---|---|
| **24220** | **TRAFO_GEOAX_ASSIGN_TAB_2** | | | | F2 |
| - | Assignment GEO axis to channel axis for transformation 2 | | | | NEW CONF |
| C07 | | | | - | BYTE |
| - | 3 | 0, 0, 0,0, 0, 0,0, 0, 0,0, 0, 0... | 0 | 20 | 7/7 |

© Siemens AG 2004 All Rights Reserved

| | | | | | |
|---|---|---|---|---|---|
| **24230** | **TRAFO_INCLUDES_TOOL_2** | | | | M1,F2 |
| - | Tool handling with active 2nd transformation | | | | NEW CONF |
| C07 | | | | - | BOOLEAN |
| - | - | TRUE,TRUE,TRUE,TRUE,TRUE,TRUE,TRUE... | - | - | 7/7 |

| | | | | | |
|---|---|---|---|---|---|
| **24300** | **TRAFO_TYPE_3** | | | | F2 |
| - | Definition of transformation 3 in channel | | | | NEW CONF |
| C07 | | | | - | DWORD |
| - | - | 0,0,0,0,0,0,0,0,0,0,0,0,0,0,0,0 | - | - | 7/7 |

| | | | | | |
|---|---|---|---|---|---|
| **24310** | **TRAFO_AXES_IN_3** | | | | F2 |
| - | Axis assignment for transformation 3 | | | | NEW CONF |
| C07 | | | | - | BYTE |
| - | 20 | 1, 2, 3, 4, 5, 0, 0, 0, 0, 0, 0, 0, 0, 0, 0, 0, 0, 0, 0, 0, 0, 0, 0... | 0 | 20 | 7/7 |

| | | | | | |
|---|---|---|---|---|---|
| **24320** | **TRAFO_GEOAX_ASSIGN_TAB_3** | | | | F2 |
| - | Assignment GEO axis to channel axis for transformation 3 | | | | NEW CONF |
| C07 | | | | - | BYTE |
| - | 3 | 0, 0, 0,0, 0, 0,0, 0, 0,0, 0, 0,0, 0... | 0 | 20 | 7/7 |

| | | | | | |
|---|---|---|---|---|---|
| **24330** | **TRAFO_INCLUDES_TOOL_3** | | | | M1,F2 |
| - | Tool handling with active 3rd transformation | | | | NEW CONF |
| C07 | | | | - | BOOLEAN |
| - | - | TRUE,TRUE,TRUE,TRUE,TRUE,TRUE,TRUE... | - | - | 7/7 |

| | | | | | |
|---|---|---|---|---|---|
| **24400** | **TRAFO_TYPE_4** | | | | F2 |
| - | Definition of transformation 4 in channel | | | | NEW CONF |
| C07 | | | | - | DWORD |
| - | - | 0,0,0,0,0,0,0,0,0,0,0,0,0,0,0,0 | - | - | 7/7 |

© Siemens AG 2004 All Rights Reserved

| 24410 | TRAFO_AXES_IN_4 | | | | F2 |
|---|---|---|---|---|---|
| - | Axis assignment for transformation 4 | | | | NEW CONF |
| C07 | | | | - | BYTE |
| - | 20 | 1, 2, 3, 4, 5, 0, 0, 0, 0, 0, 0, 0, 0, 0, 0, 0, 0, 0, 0, 0, 0, 0, 0... | 0 | 20 | 7/7 |

| 24420 | TRAFO_GEOAX_ASSIGN_TAB_4 | | | | F2 |
|---|---|---|---|---|---|
| - | Assignment GEO axis to channel axis for transformation 4 | | | | NEW CONF |
| C07 | | | | - | BYTE |
| - | 3 | 0, 0, 0,0, 0, 0,0, 0, 0,0, 0, 0... | 0 | 20 | 7/7 |

| 24426 | TRAFO_INCLUDES_TOOL_4 | | | | M1,F2 |
|---|---|---|---|---|---|
| - | Tool handling with active 4th transformation | | | | NEW CONF |
| C07 | | | | - | BOOLEAN |
| - | - | TRUE,TRUE,TRUE,TRUE,TRUE,TRUE,TRUE... | - | - | 7/7 |

| 24430 | TRAFO_TYPE_5 | | | | F2,M1 |
|---|---|---|---|---|---|
| - | Transformation 5 in the channel | | | | NEW CONF |
| C07 | | | | - | DWORD |
| - | - | 0,0,0,0,0,0,0,0,0,0,0,0,0,0,0,0 | - | - | 7/7 |

| 24432 | TRAFO_AXES_IN_5 | | | | F2,M1 |
|---|---|---|---|---|---|
| - | Axis assignment for transformation 5 | | | | NEW CONF |
| C07 | | | | - | BYTE |
| - | 20 | 1, 2, 3, 4, 5, 0, 0, 0, 0, 0, 0, 0, 0, 0, 0, 0, 0, 0, 0, 0, 0, 0, 0... | 0 | 20 | 7/7 |

| 24434 | TRAFO_GEOAX_ASSIGN_TAB_5 | | | | F2,M1 |
|---|---|---|---|---|---|
| - | GEO/chann. axis assignment transform. 5 | | | | NEW CONF |
| C07 | | | | - | BYTE |
| - | 3 | 0, 0, 0,0, 0, 0,0, 0, 0,0, 0, 0... | 0 | 20 | 7/7 |

© Siemens AG 2004 All Rights Reserved

| | | | | | |
|---|---|---|---|---|---|
| **24436** | **TRAFO_INCLUDES_TOOL_5** | | | | M1,F2 |
| - | Tool handling with active 5th transformation | | | | NEW CONF |
| C07 | | | | - | BOOLEAN |
| - | - | TRUE,TRUE,TRUE,TRUE,TRUE,TRUE,TRUE... | - | - | 7/7 |

| | | | | | |
|---|---|---|---|---|---|
| **24440** | **TRAFO_TYPE_6** | | | | F2,M1 |
| - | Transformation 6 in the channel | | | | NEW CONF |
| C07 | | | | - | DWORD |
| - | - | 0,0,0,0,0,0,0,0,0,0,0,0,0,0,0,0 | - | - | 7/7 |

| | | | | | |
|---|---|---|---|---|---|
| **24442** | **TRAFO_AXES_IN_6** | | | | F2,M1 |
| - | Axis assignment for transformation 6 | | | | NEW CONF |
| C07 | | | | - | BYTE |
| - | 20 | 1, 2, 3, 4, 5, 0, 0, 0, 0, 0, 0, 0, 0, 0, 0, 0, 0, 0, 0, 0, 0... | 0 | 20 | 7/7 |

| | | | | | |
|---|---|---|---|---|---|
| **24444** | **TRAFO_GEOAX_ASSIGN_TAB_6** | | | | F2,M1 |
| - | GEO/chann. axis assignment transform. 6 | | | | NEW CONF |
| C07 | | | | - | BYTE |
| - | 3 | 0, 0, 0,0, 0, 0,0, 0, 0,0, 0, 0... | 0 | 20 | 7/7 |

| | | | | | |
|---|---|---|---|---|---|
| **24446** | **TRAFO_INCLUDES_TOOL_6** | | | | M1,F2 |
| - | Tool handling with active 6th transformation | | | | NEW CONF |
| C07 | | | | - | BOOLEAN |
| - | - | TRUE,TRUE,TRUE,TRUE,TRUE,TRUE,TRUE... | - | - | 7/7 |

| | | | | | |
|---|---|---|---|---|---|
| **24450** | **TRAFO_TYPE_7** | | | | F2,M1 |
| - | Transformation 7 in the channel | | | | NEW CONF |
| C07 | | | | - | DWORD |
| - | - | 0,0,0,0,0,0,0,0,0,0,0,0,0,0,0,0 | - | - | 7/7 |

© Siemens AG 2004 All Rights Reserved

| 24452 | TRAFO_AXES_IN_7 | | | | F2,M1 |
|---|---|---|---|---|---|
| - | Axis assignment for transformation 7 | | | | NEW CONF |
| C07 | | | | - | BYTE |
| - | 20 | 1, 2, 3, 4, 5, 0, 0, 0, 0, 0, 0, 0, 0, 0, 0, 0, 0, 0, 0, 0, 0, 0, 0... | 0 | 20 | 7/7 |

| 24454 | TRAFO_GEOAX_ASSIGN_TAB_7 | | | | F2,M1 |
|---|---|---|---|---|---|
| - | GEO/channel axis assignment transformation 7 | | | | NEW CONF |
| C07 | | | | - | BYTE |
| - | 3 | 0, 0, 0,0, 0, 0,0, 0, 0,0, 0, 0... | 0 | 20 | 7/7 |

| 24456 | TRAFO_INCLUDES_TOOL_7 | | | | M1,F2 |
|---|---|---|---|---|---|
| - | Tool handling with active 7th transformation | | | | NEW CONF |
| C07 | | | | - | BOOLEAN |
| - | - | TRUE,TRUE,TRUE,TRUE,TRUE,TRUE,TRUE,TRUE... | - | - | 7/7 |

| 24460 | TRAFO_TYPE_8 | | | | F2,M1 |
|---|---|---|---|---|---|
| - | Transformation 8 in the channel | | | | NEW CONF |
| C07 | | | | - | DWORD |
| - | - | 0,0,0,0,0,0,0,0,0,0,0,0,0,0,0,0 | - | - | 7/7 |

| 24462 | TRAFO_AXES_IN_8 | | | | F2,M1 |
|---|---|---|---|---|---|
| - | Axis assignment for transformation 8 | | | | NEW CONF |
| C07 | | | | - | BYTE |
| - | 20 | 1, 2, 3, 4, 5, 0, 0, 0, 0, 0, 0, 0, 0, 0, 0, 0, 0, 0, 0, 0, 0, 0, 0... | 0 | 20 | 7/7 |

| 24464 | TRAFO_GEOAX_ASSIGN_TAB_8 | | | | F2,M1 |
|---|---|---|---|---|---|
| - | GEO/chann. axis assignment transform. 8 | | | | NEW CONF |
| C07 | | | | - | BYTE |
| - | 3 | 0, 0, 0,0, 0, 0,0, 0, 0,0, 0, 0... | 0 | 20 | 7/7 |

© Siemens AG 2004 All Rights Reserved

| | | | | | |
|---|---|---|---|---|---|
| **24466** | **TRAFO_INCLUDES_TOOL_8** | | | | M1,F2 |
| - | Tool handling with 8th active transformation | | | | NEW CONF |
| C07 | | | | - | BOOLEAN |
| - | - | TRUE,TRUE,TRUE,TRUE,TRUE,TRUE,TRUE... | - | - | 7/7 |

| | | | | | |
|---|---|---|---|---|---|
| **24470** | **TRAFO_TYPE_9** | | | | - |
| - | Transformation 9 in channel | | | | NEW CONF |
| C07 | | | | - | DWORD |
| - | - | 0,0,0,0,0,0,0,0,0,0,0,0,0,0,0,0 | - | - | 7/7 |

| | | | | | |
|---|---|---|---|---|---|
| **24472** | **TRAFO_AXES_IN_9** | | | | M1 |
| - | Axis assignment for transformation 9 | | | | NEW CONF |
| C07 | | | | - | BYTE |
| - | 20 | 1, 2, 3, 4, 5, 0, 0, 0, 0, 0, 0, 0, 0, 0, 0, 0, 0, 0, 0, 0, 0... | 0 | 20 | 7/7 |

| | | | | | |
|---|---|---|---|---|---|
| **24474** | **TRAFO_GEOAX_ASSIGN_TAB_9** | | | | M1 |
| - | GEO/channel axis assignment transformation 9 | | | | NEW CONF |
| C07 | | | | - | BYTE |
| - | 3 | 0, 0, 0,0, 0, 0,0, 0, 0,0, 0, 0... | 0 | 20 | 7/7 |

| | | | | | |
|---|---|---|---|---|---|
| **24476** | **TRAFO_INCLUDES_TOOL_9** | | | | M1 |
| - | Treatment of tool with active 9th transformation | | | | NEW CONF |
| C07 | | | | - | BOOLEAN |
| - | - | TRUE,TRUE,TRUE,TRUE,TRUE,TRUE,TRUE... | - | - | 7/7 |

| | | | | | |
|---|---|---|---|---|---|
| **24480** | **TRAFO_TYPE_10** | | | | M1 |
| - | Transformation 10 in channel | | | | NEW CONF |
| C07 | | | | - | DWORD |
| - | - | 0,0,0,0,0,0,0,0,0,0,0,0,0,0,0,0 | - | - | 7/7 |

© Siemens AG 2004 All Rights Reserved

| | | | | | |
|---|---|---|---|---|---|
| **24482** | **TRAFO_AXES_IN_10** | | | | M1 |
| - | Axis assignment for transformation 10 | | | | NEW CONF |
| C07 | | | | - | BYTE |
| - | 20 | 1, 2, 3, 4, 5, 0, 0, 0, 0, 0, 0, 0, 0, 0, 0, 0, 0, 0, 0, 0, 0... | 0 | 20 | 7/7 |

| | | | | | |
|---|---|---|---|---|---|
| **24484** | **TRAFO_GEOAX_ASSIGN_TAB_10** | | | | M1 |
| - | GEO/channel axis assignment transformation 10 | | | | NEW CONF |
| C07 | | | | - | BYTE |
| - | 3 | 0, 0, 0,0, 0, 0,0, 0, 0,0, 0, 0... | 0 | 20 | 7/7 |

| | | | | | |
|---|---|---|---|---|---|
| **24486** | **TRAFO_INCLUDES_TOOL_10** | | | | M1 |
| - | Treatment of tool with active 10th transformation | | | | NEW CONF |
| C07 | | | | - | BOOLEAN |
| - | - | TRUE,TRUE,TRUE,TRUE,TRUE,TRUE,TRUE... | - | - | 7/7 |

| | | | | | |
|---|---|---|---|---|---|
| **24500** | **TRAFO5_PART_OFFSET_1** | | | | F2 |
| mm | Offset vector of 5-axis transformation 1 | | | | NEW CONF |
| C07 | | | | - | DOUBLE |
| - | 3 | 0.0, 0.0 , 0.0,0.0, 0.0 , 0.0... | - | - | 7/7 |

| | | | | | |
|---|---|---|---|---|---|
| **24510** | **TRAFO5_ROT_AX_OFFSET_1** | | | | F2 |
| degrees | Position offset of rotary axes 1/2/ for 5-axis transformation 1 | | | | NEW CONF |
| C07 | | | | - | DOUBLE |
| - | 3 | 0.0, 0.0, 0.0,0.0, 0.0, 0.0... | - | - | 7/7 |

| | | | | | |
|---|---|---|---|---|---|
| **24520** | **TRAFO5_ROT_SIGN_IS_PLUS_1** | | | | F2 |
| - | Sign of rotary axis 1/2/3 for 5-axis transformation 1 | | | | NEW CONF |
| C07 | | | | - | BOOLEAN |
| - | 3 | TRUE, TRUE, TRUE,TRUE, TRUE, TRUE... | - | - | 7/7 |

| | | | | | |
|---|---|---|---|---|---|
| **24530** | **TRAFO5_NON_POLE_LIMIT_1** | | | | F2 |
| degrees | Definition of pole range for 5-axis transformation 1 | | | | NEW CONF |
| C07 | | | | - | DOUBLE |
| - | - | 2.0,2.0,2.0,2.0,2.0,2.0, 2.0,2.0,2.0... | - | - | 7/7 |

© Siemens AG 2004 All Rights Reserved

| | | | | | |
|---|---|---|---|---|---|
| **24540** | **TRAFO5_POLE_LIMIT_1** | | | | F2 |
| degrees | End angle toler. with interpol. through pole for 5-axis transf. | | | | NEW CONF |
| C07 | | | | - | DOUBLE |
| - | - | 2.0,2.0,2.0,2.0,2.0,2.0, 2.0,2.0,2.0... | - | - | 7/7 |

| | | | | | |
|---|---|---|---|---|---|
| **24550** | **TRAFO5_BASE_TOOL_1** | | | | F2 |
| mm | Vector of base tool on activation of 5-axis transformation 1 | | | | NEW CONF |
| C07 | | | | - | DOUBLE |
| - | 3 | 0.0, 0.0 , 0.0,0.0, 0.0 , 0.0... | - | - | 7/7 |

| | | | | | |
|---|---|---|---|---|---|
| **24558** | **TRAFO5_JOINT_OFFSET_PART_1** | | | | F2 |
| mm | Vector of kinematic table offset | | | | NEW CONF |
| C07 | | | | - | DOUBLE |
| - | 3 | 0.0, 0.0 , 0.0,0.0, 0.0 , 0.0... | - | - | 7/7 |

| | | | | | |
|---|---|---|---|---|---|
| **24560** | **TRAFO5_JOINT_OFFSET_1** | | | | F2 |
| mm | Vector of kinematic offset of 5-axis transformation 1 | | | | NEW CONF |
| C07 | | | | - | DOUBLE |
| - | 3 | 0.0, 0.0 , 0.0,0.0, 0.0 , 0.0... | - | - | 7/7 |

| | | | | | |
|---|---|---|---|---|---|
| **24561** | **TRAFO6_JOINT_OFFSET_2_3_1** | | | | - |
| mm | Vector of kinematic offset | | | | NEW CONF |
| C07 | | | | - | DOUBLE |
| - | 3 | 0.0, 0.0 , 0.0,0.0, 0.0 , 0.0... | - | - | 7/7 |

| | | | | | |
|---|---|---|---|---|---|
| **24562** | **TRAFO5_TOOL_ROT_AX_OFFSET_1** | | | | F2 |
| mm | Offset of swivel point of 1st rotary axis on 5-axis transform. | | | | NEW CONF |
| C07 | | | | - | DOUBLE |
| - | 3 | 0.0, 0.0 , 0.0,0.0, 0.0 , 0.0... | - | - | 7/7 |

| | | | | | |
|---|---|---|---|---|---|
| **24564** | **TRAFO5_NUTATOR_AX_ANGLE_1** | | | | F2 |
| degrees | Angle of inclin. of 2nd rot. axis of 1st nutating head transf. | | | | NEW CONF |
| C07 | | | | - | DOUBLE |
| - | - | 45.0,45.0,45.0,45.0,45. 0,45.0,45.0... | -89. | 89. | 7/7 |

© Siemens AG 2004 All Rights Reserved

| | | | | | |
|---|---|---|---|---|---|
| **24566** | **TRAFO5_NUTATOR_VIRT_ORIAX_1** | | | | F2 |
| - | Virtual orientation axes | | | | NEW CONF |
| C07 | | | | - | BOOLEAN |
| - | - | FALSE,FALSE,FALSE, FALSE,FALSE,FALSE. .. | - | - | 7/7 |

| | | | | | |
|---|---|---|---|---|---|
| **24570** | **TRAFO5_AXIS1_1** | | | | F2 |
| - | Direction of 1st rotary axis | | | | NEW CONF |
| C07 | | | | - | DOUBLE |
| - | 3 | 0.0, 0.0 , 0.0,0.0, 0.0 , 0.0... | - | - | 7/7 |

| | | | | | |
|---|---|---|---|---|---|
| **24572** | **TRAFO5_AXIS2_1** | | | | F2 |
| - | Direction of 2nd rotary axis | | | | NEW CONF |
| C07 | | | | - | DOUBLE |
| - | 3 | 0.0, 0.0 , 0.0,0.0, 0.0 , 0.0... | - | - | 7/7 |

| | | | | | |
|---|---|---|---|---|---|
| **24573** | **TRAFO5_AXIS3_1** | | | | - |
| - | Direction of 3rd rotary axis | | | | NEW CONF |
| C07 | | | | - | DOUBLE |
| - | 3 | 0.0, 0.0 , 0.0,0.0, 0.0 , 0.0... | - | - | 7/7 |

| | | | | | |
|---|---|---|---|---|---|
| **24574** | **TRAFO5_BASE_ORIENT_1** | | | | F2 |
| - | Tool base orientation | | | | NEW CONF |
| C07 | | | | - | DOUBLE |
| - | 3 | 0.0, 0.0 , 1.0,0.0, 0.0 , 1.0... | - | - | 7/7 |

| | | | | | |
|---|---|---|---|---|---|
| **24576** | **TRAFO6_BASE_ORIENT_NORMAL_1** | | | | - |
| - | Tool orientation normal | | | | NEW CONF |
| C07 | | | | - | DOUBLE |
| - | 3 | 0.0, 1.0 , 0.0,0.0, 1.0 , 0.0... | - | - | 7/7 |

| | | | | | |
|---|---|---|---|---|---|
| **24580** | **TRAFO5_TOOL_VECTOR_1** | | | | F2 |
| - | Direction of orientation vector | | | | POWER ON |
| C07 | | | | - | BYTE |
| - | - | 2,2,2,2,2,2,2,2,2,2,2,2,2,2,2,2 | 0 | 2 | 7/2 |

© Siemens AG 2004 All Rights Reserved

| | | | | | |
|---|---|---|---|---|---|
| **24582** | **TRAFO5_TCARR_NO_1** | | | | F2 |
| - | TCARR number for the first 5-axis transformation | | | | NEW CONF |
| C07 | | | | - | DWORD |
| - | - | 0,0,0,0,0,0,0,0,0,0,0,0, 0,0,0,0 | - | - | 7/7 |

| | | | | | |
|---|---|---|---|---|---|
| **24585** | **TRAFO5_ORIAX_ASSIGN_TAB_1** | | | | F2 |
| - | ORI/channel axis assignment transformation 1 | | | | POWER ON |
| C07 | | | | - | BYTE |
| - | 3 | 0, 0, 0,0, 0, 0,0, 0, 0,0, 0, 0... | 0 | 20 | 7/2 |

| | | | | | |
|---|---|---|---|---|---|
| **24590** | **TRAFO5_ROT_OFFSET_FROM_FR_1** | | | | F2 |
| - | Offset of transformation rotary axes from WO. | | | | IMMEDIATELY |
| C01, C07 | | | | - | BOOLEAN |
| - | - | FALSE,FALSE,FALSE, FALSE,FALSE,FALSE. .. | - | - | 7/2 |

| | | | | | |
|---|---|---|---|---|---|
| **24600** | **TRAFO5_PART_OFFSET_2** | | | | F2 |
| mm | Offset vector of 5-axis transformation 2 | | | | NEW CONF |
| C07 | | | | - | DOUBLE |
| - | 3 | 0.0, 0.0 , 0.0,0.0, 0.0 , 0.0... | - | - | 7/7 |

| | | | | | |
|---|---|---|---|---|---|
| **24610** | **TRAFO5_ROT_AX_OFFSET_2** | | | | F2 |
| degrees | Position offset of rotary axes 1/2/3 | | | | NEW CONF |
| C07 | | | | - | DOUBLE |
| - | 3 | 0.0, 0.0, 0.0,0.0, 0.0, 0.0... | - | - | 7/7 |

| | | | | | |
|---|---|---|---|---|---|
| **24620** | **TRAFO5_ROT_SIGN_IS_PLUS_2** | | | | F2 |
| - | Sign of rotary axis 1/2/3 for 5-axis transformation 2 | | | | NEW CONF |
| C07 | | | | - | BOOLEAN |
| - | 3 | TRUE, TRUE, TRUE,TRUE, TRUE, TRUE... | - | - | 7/7 |

| | | | | | |
|---|---|---|---|---|---|
| **24630** | **TRAFO5_NON_POLE_LIMIT_2** | | | | F2 |
| degrees | Definition of pole range for 5-axis transformation 2 | | | | NEW CONF |
| C07 | | | | - | DOUBLE |
| - | - | 2.0,2.0,2.0,2.0,2.0,2.0, 2.0,2.0,2.0... | - | - | 7/7 |

© Siemens AG 2004 All Rights Reserved

| 24640 | TRAFO5_POLE_LIMIT_2 | | | | F2 |
|---|---|---|---|---|---|
| degrees | End angle tol. with interpol. through pole for 5-axis transf. | | | | NEW CONF |
| C07 | | | | - | DOUBLE |
| - | - | 2.0,2.0,2.0,2.0,2.0,2.0, 2.0,2.0,2.0... | - | - | 7/7 |

| 24650 | TRAFO5_BASE_TOOL_2 | | | | F2 |
|---|---|---|---|---|---|
| mm | Vector of base tool on activation of 5-axis transformation 2 | | | | NEW CONF |
| C07 | | | | - | DOUBLE |
| - | 3 | 0.0, 0.0 , 0.0,0.0, 0.0 , 0.0... | - | - | 7/7 |

| 24658 | TRAFO5_JOINT_OFFSET_PART_2 | | | | F2 |
|---|---|---|---|---|---|
| mm | Vector of kinematic table offset | | | | NEW CONF |
| C07 | | | | - | DOUBLE |
| - | 3 | 0.0, 0.0 , 0.0,0.0, 0.0 , 0.0... | - | - | 7/7 |

| 24660 | TRAFO5_JOINT_OFFSET_2 | | | | F2 |
|---|---|---|---|---|---|
| mm | Vector of kinematic offset of 5-axis transformation 2 | | | | NEW CONF |
| C07 | | | | - | DOUBLE |
| - | 3 | 0.0, 0.0 , 0.0,0.0, 0.0 , 0.0... | - | - | 7/7 |

| 24661 | TRAFO6_JOINT_OFFSET_2_3_2 | | | | - |
|---|---|---|---|---|---|
| mm | Vector of kinematic offset | | | | NEW CONF |
| C07 | | | | - | DOUBLE |
| - | 3 | 0.0, 0.0 , 0.0,0.0, 0.0 , 0.0... | - | - | 7/7 |

| 24662 | TRAFO5_TOOL_ROT_AX_OFFSET_2 | | | | F2 |
|---|---|---|---|---|---|
| mm | Offset swivel point of 2nd 5-axis transf. (swivelled lin.axis) | | | | NEW CONF |
| C07 | | | | - | DOUBLE |
| - | 3 | 0.0, 0.0 , 0.0,0.0, 0.0 , 0.0... | - | - | 7/7 |

| 24664 | TRAFO5_NUTATOR_AX_ANGLE_2 | | | | F2 |
|---|---|---|---|---|---|
| degrees | Angle of inclin. of 2nd rot.axis of 2nd nutating head transf. | | | | NEW CONF |
| C07 | | | | - | DOUBLE |
| - | - | 45.0,45.0,45.0,45.0,45. 0,45.0,45.0... | -89. | 89. | 7/7 |

© Siemens AG 2004 All Rights Reserved

| | | | | | |
|---|---|---|---|---|---|
| **24666** | **TRAFO5_NUTATOR_VIRT_ORIAX_2** | | | | - |
| - | Virtual orientation axes | | | | NEW CONF |
| C07 | | | | - | BOOLEAN |
| - | - | FALSE,FALSE,FALSE, FALSE,FALSE,FALSE. .. | - | - | 7/7 |

| | | | | | |
|---|---|---|---|---|---|
| **24670** | **TRAFO5_AXIS1_2** | | | | F2 |
| - | Direction of 1st rotary axis | | | | NEW CONF |
| C07 | | | | - | DOUBLE |
| - | 3 | 0.0, 0.0 , 0.0,0.0, 0.0 , 0.0... | - | - | 7/7 |

| | | | | | |
|---|---|---|---|---|---|
| **24672** | **TRAFO5_AXIS2_2** | | | | F2 |
| - | Direction of 2nd rotary axis | | | | NEW CONF |
| C07 | | | | - | DOUBLE |
| - | 3 | 0.0, 0.0 , 0.0,0.0, 0.0 , 0.0... | - | - | 7/7 |

| | | | | | |
|---|---|---|---|---|---|
| **24673** | **TRAFO5_AXIS3_2** | | | | - |
| - | Direction of 3rd rotary axis | | | | NEW CONF |
| C07 | | | | - | DOUBLE |
| - | 3 | 0.0, 0.0 , 0.0,0.0, 0.0 , 0.0... | - | - | 7/7 |

| | | | | | |
|---|---|---|---|---|---|
| **24674** | **TRAFO5_BASE_ORIENT_2** | | | | F2 |
| - | Basic tool orientation | | | | NEW CONF |
| C07 | | | | - | DOUBLE |
| - | 3 | 0.0, 0.0 , 0.0,0.0, 0.0 , 0.0... | - | - | 7/7 |

| | | | | | |
|---|---|---|---|---|---|
| **24676** | **TRAFO6_BASE_ORIENT_NORMAL_2** | | | | - |
| - | Tool orientation normal | | | | NEW CONF |
| C07 | | | | - | DOUBLE |
| - | 3 | 0.0, 1.0 , 0.0,0.0, 1.0 , 0.0... | - | - | 7/7 |

| | | | | | |
|---|---|---|---|---|---|
| **24680** | **TRAFO5_TOOL_VECTOR_2** | | | | F2 |
| - | Direction of orientation vector | | | | POWER ON |
| C07 | | | | - | BYTE |
| - | - | 2,2,2,2,2,2,2,2,2,2,2,2, 2,2,2,2 | 0 | 2 | 7/2 |

© Siemens AG 2004 All Rights Reserved

| | | | | | |
|---|---|---|---|---|---|
| **24682** | **TRAFO5_TCARR_NO_2** | | | | F2 |
| - | TCARR number for the second 5-axis transformation | | | | NEW CONF |
| C07 | | | | - | DWORD |
| - | - | 0,0,0,0,0,0,0,0,0,0,0,0, 0,0,0,0 | - | - | 7/7 |

| | | | | | |
|---|---|---|---|---|---|
| **24685** | **TRAFO5_ORIAX_ASSIGN_TAB_2** | | | | F2 |
| - | ORI/channel axis assignment transformation 1 | | | | POWER ON |
| C07 | | | | - | BYTE |
| - | 3 | 0, 0, 0,0, 0, 0,0, 0, 0,0, 0, 0... | 0 | 20 | 7/2 |

| | | | | | |
|---|---|---|---|---|---|
| **24690** | **TRAFO5_ROT_OFFSET_FROM_FR_2** | | | | F2 |
| - | Offset of transformation rotary axes from WO. | | | | IMMEDIATELY |
| C01, C07 | | | | - | BOOLEAN |
| - | - | FALSE,FALSE,FALSE, FALSE,FALSE,FALSE. .. | - | - | 7/2 |

| | | | | | |
|---|---|---|---|---|---|
| **24700** | **TRAANG_ANGLE_1** | | | | M1 |
| degrees | Angle between Cartesian axis and real (inclined) axis | | | | NEW CONF |
| C07 | | | | - | DOUBLE |
| - | - | 0.0,0.0,0.0,0.0,0.0,0.0, 0.0,0.0,0.0... | - | - | 7/7 |

| | | | | | |
|---|---|---|---|---|---|
| **24710** | **TRAANG_BASE_TOOL_1** | | | | M1 |
| mm | Vector of base tool for 1st TRAANG transformation | | | | NEW CONF |
| C07 | | | | - | DOUBLE |
| - | 3 | 0.0, 0.0 , 0.0,0.0, 0.0 , 0.0... | - | - | 7/7 |

| | | | | | |
|---|---|---|---|---|---|
| **24720** | **TRAANG_PARALLEL_VELO_RES_1** | | | | M1 |
| - | Velocity margin of parallel axis for the 1st TRAANG transf. | | | | NEW CONF |
| C07 | | | | - | DOUBLE |
| - | - | 0.0,0.0,0.0,0.0,0.0,0.0, 0.0,0.0,0.0... | 0.0 | 1.0 | 7/7 |

| | | | | | |
|---|---|---|---|---|---|
| **24721** | **TRAANG_PARALLEL_ACCEL_RES_1** | | | | M1 |
| - | Acceleration margin of parallel axis for the 1st TRAANG transf. | | | | NEW CONF |
| C07 | | | | - | DOUBLE |
| - | - | 0.0,0.0,0.0,0.0,0.0,0.0, 0.0,0.0,0.0... | 0.0 | 1.0 | 7/7 |

© Siemens AG 2004 All Rights Reserved

| | | | | | |
|---|---|---|---|---|---|
| **24750** | **TRAANG_ANGLE_2** | | | | M1 |
| degrees | Angle between Cartesian axis and real (inclined) axis | | | | NEW CONF |
| C07 | | | | - | DOUBLE |
| - | - | 0.0,0.0,0.0,0.0,0.0,0.0, 0.0,0.0,0.0... | - | - | 7/7 |

| | | | | | |
|---|---|---|---|---|---|
| **24760** | **TRAANG_BASE_TOOL_2** | | | | M1 |
| mm | Vector of base tool for 2nd TRAANG transformation | | | | NEW CONF |
| C07 | | | | - | DOUBLE |
| - | 3 | 0.0, 0.0 , 0.0,0.0, 0.0 , 0.0... | - | - | 7/7 |

| | | | | | |
|---|---|---|---|---|---|
| **24770** | **TRAANG_PARALLEL_VELO_RES_2** | | | | M1 |
| - | Velocity margin of parallel axis for the 2nd TRAANG transform. | | | | NEW CONF |
| C07 | | | | - | DOUBLE |
| - | - | 0.0,0.0,0.0,0.0,0.0,0.0, 0.0,0.0,0.0... | 0.0 | 1.0 | 7/7 |

| | | | | | |
|---|---|---|---|---|---|
| **24771** | **TRAANG_PARALLEL_ACCEL_RES_2** | | | | M1 |
| - | Acceler. margin of parallel axis for the 2nd TRAANG transform. | | | | NEW CONF |
| C07 | | | | - | DOUBLE |
| - | - | 0.0,0.0,0.0,0.0,0.0,0.0, 0.0,0.0,0.0... | 0.0 | 1.0 | 7/7 |

| | | | | | |
|---|---|---|---|---|---|
| **24800** | **TRACYL_ROT_AX_OFFSET_1** | | | | M1 |
| degrees | Offset of rotary axis for the 1st TRACYL transformation | | | | NEW CONF |
| C07 | | | | - | DOUBLE |
| - | - | 0.0,0.0,0.0,0.0,0.0,0.0, 0.0,0.0,0.0... | - | - | 7/7 |

| | | | | | |
|---|---|---|---|---|---|
| **24805** | **TRACYL_ROT_AX_FRAME_1** | | | | K2 |
| - | Rotary axis offset TRACYL 1 | | | | NEW CONF |
| C07 | | | | - | BYTE |
| - | - | 0,0,0,0,0,0,0,0,0,0,0, 0,0,0,0 | 0 | 2 | 7/7 |

| | | | | | |
|---|---|---|---|---|---|
| **24808** | **TRACYL_DEFAULT_MODE_1** | | | | M1 |
| - | TRACYL mode selection | | | | NEW CONF |
| C07 | | | | - | BYTE |
| - | - | 0,0,0,0,0,0,0,0,0,0,0, 0,0,0,0 | 0 | 1 | 7/7 |

© Siemens AG 2004 All Rights Reserved

| | | | | | |
|---|---|---|---|---|---|
| **24810** | **TRACYL_ROT_SIGN_IS_PLUS_1** | | | | M1 |
| - | Sign of rotary axis for 1st TRACYL transformation | | | | NEW CONF |
| C07 | | | | - | BOOLEAN |
| - | - | TRUE,TRUE,TRUE,TRUE,TRUE,TRUE,TRUE,TRUE... | - | - | 7/7 |

| | | | | | |
|---|---|---|---|---|---|
| **24820** | **TRACYL_BASE_TOOL_1** | | | | M1 |
| mm | Vector of base tool for 1st TRACYL transformation | | | | NEW CONF |
| C07 | | | | - | DOUBLE |
| - | 3 | 0.0, 0.0 , 0.0,0.0, 0.0 , 0.0... | - | - | 7/7 |

| | | | | | |
|---|---|---|---|---|---|
| **24850** | **TRACYL_ROT_AX_OFFSET_2** | | | | M1 |
| degrees | Offset of rotary axis for the 2nd TRACYL transformation | | | | NEW CONF |
| C07 | | | | - | DOUBLE |
| - | - | 0.0,0.0,0.0,0.0,0.0,0.0,0.0, 0.0,0.0,0.0,0.0... | - | - | 7/7 |

| | | | | | |
|---|---|---|---|---|---|
| **24855** | **TRACYL_ROT_AX_FRAME_2** | | | | K2 |
| - | Rotary axis offset TRACYL 2 | | | | NEW CONF |
| C07 | | | | - | BYTE |
| - | - | 0,0,0,0,0,0,0,0,0,0,0,0, 0,0,0,0 | 0 | 2 | 7/7 |

| | | | | | |
|---|---|---|---|---|---|
| **24858** | **TRACYL_DEFAULT_MODE_2** | | | | M1 |
| - | TRACYL mode selection | | | | NEW CONF |
| C07 | | | | - | BYTE |
| - | - | 0,0,0,0,0,0,0,0,0,0,0,0, 0,0,0,0 | 0 | 1 | 7/7 |

| | | | | | |
|---|---|---|---|---|---|
| **24860** | **TRACYL_ROT_SIGN_IS_PLUS_2** | | | | M1 |
| - | Sign of rotary axis for 2nd TRACYL transformation | | | | NEW CONF |
| C07 | | | | - | BOOLEAN |
| - | - | TRUE,TRUE,TRUE,TRUE,TRUE,TRUE,TRUE,TRUE... | - | - | 7/7 |

| | | | | | |
|---|---|---|---|---|---|
| **24870** | **TRACYL_BASE_TOOL_2** | | | | M1 |
| mm | Vector of base tool for 2nd TRACYL transformation | | | | NEW CONF |
| C07 | | | | - | DOUBLE |
| - | 3 | 0.0, 0.0 , 0.0,0.0, 0.0 , 0.0... | - | - | 7/7 |

© Siemens AG 2004 All Rights Reserved

| | | | | | |
|---|---|---|---|---|---|
| **24900** | **TRANSMIT_ROT_AX_OFFSET_1** | | | | M1 |
| degrees | Offset of rotary axis for the 1st TRANSMIT transformation | | | | NEW CONF |
| C07 | | | | - | DOUBLE |
| - | - | 0.0,0.0,0.0,0.0,0.0,0.0, 0.0,0.0,0.0... | - | - | 7/7 |

| | | | | | |
|---|---|---|---|---|---|
| **24905** | **TRANSMIT_ROT_AX_FRAME_1** | | | | - |
| - | Rotary axis offset TRANSMIT 1 | | | | NEW CONF |
| C07 | | | | - | BYTE |
| - | - | 0,0,0,0,0,0,0,0,0,0,0,0, 0,0,0,0 | 0 | 2 | 7/7 |

| | | | | | |
|---|---|---|---|---|---|
| **24910** | **TRANSMIT_ROT_SIGN_IS_PLUS_1** | | | | M1 |
| - | Sign of rotary axis for 1st TRANSMIT transformation | | | | NEW CONF |
| C07 | | | | - | BOOLEAN |
| - | - | TRUE,TRUE,TRUE,TRUE,TRUE,TRUE,TRUE,TRUE... | - | - | 7/7 |

| | | | | | |
|---|---|---|---|---|---|
| **24911** | **TRANSMIT_POLE_SIDE_FIX_1** | | | | M1 |
| - | Restr. working range before/behind the pole, 1. TRANSMIT | | | | NEW CONF |
| C07 | | | | - | BYTE |
| - | - | 0,0,0,0,0,0,0,0,0,0,0,0, 0,0,0,0 | 0 | 2 | 7/7 |

| | | | | | |
|---|---|---|---|---|---|
| **24920** | **TRANSMIT_BASE_TOOL_1** | | | | M1 |
| mm | Vector of base tool for 1st TRANSMIT transformation | | | | NEW CONF |
| C07 | | | | - | DOUBLE |
| - | 3 | 0.0, 0.0 , 0.0,0.0, 0.0 , 0.0... | - | - | 7/7 |

| | | | | | |
|---|---|---|---|---|---|
| **24950** | **TRANSMIT_ROT_AX_OFFSET_2** | | | | M1 |
| degrees | Offset of rotary axis for the 2nd TRANSMIT transformation | | | | NEW CONF |
| C07 | | | | - | DOUBLE |
| - | - | 0.0,0.0,0.0,0.0,0.0,0.0, 0.0,0.0,0.0... | - | - | 7/7 |

| | | | | | |
|---|---|---|---|---|---|
| **24955** | **TRANSMIT_ROT_AX_FRAME_2** | | | | - |
| - | Rotary axis offset TRANSMIT 2 | | | | NEW CONF |
| C07 | | | | - | BYTE |
| - | - | 0,0,0,0,0,0,0,0,0,0,0,0, 0,0,0,0 | 0 | 2 | 7/7 |

© Siemens AG 2004 All Rights Reserved

| | | | | | |
|---|---|---|---|---|---|
| **24960** | **TRANSMIT_ROT_SIGN_IS_PLUS_2** | | | | M1 |
| - | Sign of rotary axis for 2nd TRANSMIT transformation | | | | NEW CONF |
| C07 | | | | - | BOOLEAN |
| - | - | TRUE,TRUE,TRUE,TRUE,TRUE,TRUE,TRUE ... | - | - | 7/7 |

| | | | | | |
|---|---|---|---|---|---|
| **24961** | **TRANSMIT_POLE_SIDE_FIX_2** | | | | M1 |
| - | Restr. of working range before/behind the pole, 2. TRANSMIT | | | | NEW CONF |
| C07 | | | | - | BYTE |
| - | - | 0,0,0,0,0,0,0,0,0,0,0,0,0,0,0,0 | 0 | 2 | 7/7 |

| | | | | | |
|---|---|---|---|---|---|
| **24970** | **TRANSMIT_BASE_TOOL_2** | | | | M1 |
| mm | Vector of base tool for 2nd TRANSMIT transformation | | | | NEW CONF |
| C07 | | | | - | DOUBLE |
| - | 3 | 0.0, 0.0 , 0.0,0.0, 0.0 , 0.0... | - | - | 7/7 |

| | | | | | |
|---|---|---|---|---|---|
| **24995** | **TRACON_CHAIN_1** | | | | M1 |
| - | Linking transformations | | | | NEW CONF |
| C07 | | | | - | DWORD |
| - | 4 | 0, 0, 0, 0,0, 0, 0, 0,0, 0, 0, 0, 0... | 0 | 8 | 7/7 |

| | | | | | |
|---|---|---|---|---|---|
| **24996** | **TRACON_CHAIN_2** | | | | M1 |
| - | Linking transformations | | | | NEW CONF |
| C07 | | | | - | DWORD |
| - | 4 | 0, 0, 0 ,0,0, 0, 0, 0,0, 0, 0, 0, 0... | 0 | 8 | 7/7 |

| | | | | | |
|---|---|---|---|---|---|
| **24997** | **TRACON_CHAIN_3** | | | | M1 |
| - | Transformation grouping | | | | NEW CONF |
| C07 | | | | - | DWORD |
| - | 4 | 0, 0, 0 ,0,0, 0, 0, 0,0, 0, 0, 0, 0... | 0 | 8 | 7/7 |

| | | | | | |
|---|---|---|---|---|---|
| **24998** | **TRACON_CHAIN_4** | | | | M1 |
| - | Transformation grouping | | | | NEW CONF |
| C07 | | | | - | DWORD |
| - | 4 | 0, 0, 0 ,0,0, 0, 0, 0,0, 0, 0, 0, 0... | 0 | 8 | 7/7 |

© Siemens AG 2004 All Rights Reserved

## 2.6.4 Punching and nibbling

| | | | | | |
|---|---|---|---|---|---|
| **26000** | **PUNCHNIB_ASSIGN_FASTIN** | | | | N4 |
| - | Hardware assignment for input byte for stroke control | | | | POWER ON |
| C01, C09 | | | | - | DWORD |
| - | - | 0,0,0,0,0,0,0,0,0,0,0,0, 0,0,0,0 | - | - | 7/2 |

| | | | | | |
|---|---|---|---|---|---|
| **26002** | **PUNCHNIB_ASSIGN_FASTOUT** | | | | N4 |
| - | Hardware assignment for output byte for stroke control | | | | POWER ON |
| C01, C09 | | | | - | DWORD |
| - | - | 0,0,0,0,0,0,0,0,0,0,0,0, 0,0,0,0 | - | - | 7/2 |

| | | | | | |
|---|---|---|---|---|---|
| **26004** | **NIBBLE_PUNCH_OUTMASK** | | | | N4 |
| - | Screenform for fast output bits | | | | POWER ON |
| C01, C09 | | | | - | BYTE |
| - | 8 | 1, 0, 0, 0, 0, 0, 0, 0,0, 0, 0, 0, 0, 0, 0, 0... | - | - | 7/2 |

| | | | | | |
|---|---|---|---|---|---|
| **26006** | **NIBBLE_PUNCH_INMASK** | | | | N4 |
| - | Screenform for fast input bits | | | | POWER ON |
| C01, C09 | | | | - | BYTE |
| - | 8 | 1, 0, 0, 0, 0, 0, 0, 0,0, 0, 0, 0, 0, 0, 0, 0... | - | - | 7/2 |

| | | | | | |
|---|---|---|---|---|---|
| **26008** | **NIBBLE_PUNCH_CODE** | | | | N4 |
| - | Definition of M functions | | | | POWER ON |
| C09 | | | | - | DWORD |
| - | 8 | 0,23,22, 25, 26, 0, 0, 0,0, 0, 0, 0, 0, 0, 0, 0... | - | - | 7/2 |

| | | | | | |
|---|---|---|---|---|---|
| **26010** | **PUNCHNIB_AXIS_MASK** | | | | N4 |
| - | Definition of punching and nibbling axes | | | | POWER ON |
| C09 | | | | - | DWORD |
| - | - | 7,0,0,0,0,0,0,0,0,0,0,0, 0,0,0,0 | - | - | 7/2 |

© Siemens AG 2004 All Rights Reserved

| | | | | | |
|---|---|---|---|---|---|
| **26012** | **PUNCHNIB_ACTIVATION** | | | | N4 |
| - | Activation of punching and nibbling functions | | | | POWER ON |
| C09 | | | | - | DWORD |
| - | - | 0,0,0,0,0,0,0,0,0,0,0,0,0,0,0,0 | - | - | 7/2 |

| | | | | | |
|---|---|---|---|---|---|
| **26014** | **PUNCH_PATH_SPLITTING** | | | | N4 |
| - | Activation of automatic path segmentation | | | | POWER ON |
| C09 | | | | - | DWORD |
| - | - | 2,2,2,2,2,2,2,2,2,2,2,2,2,2,2,2 | - | - | 7/2 |

| | | | | | |
|---|---|---|---|---|---|
| **26016** | **PUNCH_PARTITION_TYPE** | | | | N4 |
| - | Behavior of individual axes with automatic path segmentation | | | | POWER ON |
| C09 | | | | - | DWORD |
| - | - | 1,0,0,0,0,0,0,0,0,0,0,0,0,0,0,0 | - | - | 7/2 |

| | | | | | |
|---|---|---|---|---|---|
| **26018** | **NIBBLE_PRE_START_TIME** | | | | N4 |
| s | Delay time for nibbling/punching with G603 | | | | POWER ON |
| C09 | | | | - | DOUBLE |
| - | - | 0.,0.,0.,0.,0.,0.,0.,0.,0.,0.,0.,0.,0.,0.,0.,0.... | - | - | 7/2 |

| | | | | | |
|---|---|---|---|---|---|
| **26020** | **NIBBLE_SIGNAL_CHECK** | | | | N4 |
| - | Alarm on chattering punching signal | | | | POWER ON |
| C09 | | | | - | DWORD |
| - | - | 0,0,0,0,0,0,0,0,0,0,0,0,0,0,0,0 | - | - | 7/2 |

| | | | | | |
|---|---|---|---|---|---|
| **27100** | **ABSBLOCK_FUNCTION_MASK** | | | | - |
| - | Setting of block display with absolute values | | | | POWER ON |
| N01 | | | | - | DWORD |
| - | - | 0x0,0x0,0x0,0x0,0x0,0x0,0x0,0x0,0x0,0x0,0x0... | 0 | 0x1 | 7/2 |

| | | | | | |
|---|---|---|---|---|---|
| **27200** | **MMC_INFO_NO_UNIT** | | | | - |
| - | MMC info (without phys. unit) | | | | POWER ON |
| EXP, - | | | | - | DOUBLE |
| - | 80 | 45., 2., 0., 1., 0., -1., 0., 1., 100., 1., 1., 0., 0., 0., 0.... | - | - | 0/2 |

© Siemens AG 2004 All Rights Reserved

| | | | | | |
|---|---|---|---|---|---|
| **27201** | **MMC_INFO_NO_UNIT_STATUS** | | | | - |
| - | MMC status info (without phys. unit) | | | | POWER ON |
| EXP, - | | | | - | BYTE |
| - | 80 | 1, 1, 1, 1, 1, 1, 1, 1, 1, 1, 1, 1, 1, 1, 1, 1, 1, 1, 1, 1, 1, 1, 1, 1, 1... | - | - | 0/2 |

| | | | | | |
|---|---|---|---|---|---|
| **27202** | **MMC_INFO_POSN_LIN** | | | | - |
| mm | MMC info (lin. positions) | | | | POWER ON |
| EXP, - | | | | - | DOUBLE |
| - | 50 | 0., 0., 1., 1., 0., 0., 100., 0., 0., 1000., 1., 1.... | - | - | 0/2 |

| | | | | | |
|---|---|---|---|---|---|
| **27203** | **MMC_INFO_POSN_LIN_STATUS** | | | | - |
| - | MMC status info (lin. positions) | | | | POWER ON |
| EXP, - | | | | - | BYTE |
| - | 50 | 1, 1, 1, 1, 1, 1, 1, 1, 1, 1, 1, 1, 1, 1, 1, 1, 1, 1, 1, 1, 1, 1, 1, 1, 1... | - | - | 0/2 |

| | | | | | |
|---|---|---|---|---|---|
| **27204** | **MMC_INFO_VELO_LIN** | | | | - |
| mm/min | MMC info (lin. velocity) | | | | POWER ON |
| EXP, - | | | | - | DOUBLE |
| - | 16 | 10., 10., 2000., 10000., 300., 1000., 1000., 10., 0.,0.,0.,0.... | - | - | 0/2 |

| | | | | | |
|---|---|---|---|---|---|
| **27205** | **MMC_INFO_VELO_LIN_STATUS** | | | | - |
| - | MMC status info (lin. velocity) | | | | POWER ON |
| EXP, - | | | | - | BYTE |
| - | 16 | 1,1,1,1,1,1,1,1,1,0,0,0,0, 0,0,0,0,0... | - | - | 0/2 |

| | | | | | |
|---|---|---|---|---|---|
| **27206** | **MMC_INFO_CUT_SPEED** | | | | - |
| m/min | MMC info (cutting speed) | | | | POWER ON |
| EXP, - | | | | - | DOUBLE |
| - | 5 | 100.,0.,0.,0.,0.,100.,0., 0.,0.,0.,0.... | - | - | 0/2 |

| | | | | | |
|---|---|---|---|---|---|
| **27207** | **MMC_INFO_CUT_SPEED_STATUS** | | | | - |
| - | MMC status info (cutting speed) | | | | POWER ON |
| EXP, - | | | | - | BYTE |
| - | 5 | 1,0,0,0,0,1,0,0,0,0,1,0, 0,0,0... | - | - | 0/2 |

© Siemens AG 2004 All Rights Reserved

| | | | | | |
|---|---|---|---|---|---|
| **27208** | **MMC_INFO_REV_FEED** | | | | - |
| mm/rev | MMC info (feed) | | | | POWER ON |
| EXP, - | | | | - | DOUBLE |
| - | 10 | 1.,0.100,1.,1.,0.,0.,0.,0.,0.,0.... | - | - | 0/2 |

| | | | | | |
|---|---|---|---|---|---|
| **27209** | **MMC_INFO_REV_FEED_STATUS** | | | | - |
| - | MMC status info (feed) | | | | POWER ON |
| EXP, - | | | | - | BYTE |
| - | 10 | 1,1,1,1,0,0,0,0,0,0,1,1,1,1,0,0,0,0,0,0... | - | - | 0/2 |

| | | | | | |
|---|---|---|---|---|---|
| **27800** | **TECHNOLOGY_MODE** | | | | A2 |
| - | Mode of technology in channel | | | | NEW CONF |
| C09 | | | | - | BYTE |
| - | - | 0,0,0,0,0,0,0,0,0,0,0,0,0,0,0,0 | - | - | 7/2 |

| | | | | | |
|---|---|---|---|---|---|
| **27860** | **PROCESSTIMER_MODE** | | | | K1 |
| - | Activation of program runtime measurement | | | | RESET |
| C09 | | | | - | DWORD |
| - | - | 0x00,0x00,0x00,0x00,0x00,0x00,0x00,0x00... | 0 | 0x0FF | 7/2 |

| | | | | | |
|---|---|---|---|---|---|
| **27880** | **PART_COUNTER** | | | | K1 |
| - | Activation of workpiece counter | | | | RESET |
| C09 | | | | - | DWORD |
| - | - | 0x0,0x0,0x0,0x0,0x0,0x0,0x0,0x0,0x0,0x0... | 0 | 0x0FFFF | 7/2 |

| | | | | | |
|---|---|---|---|---|---|
| **27882** | **PART_COUNTER_MCODE** | | | | K1 |
| - | Workpiece counting with user-defined M command | | | | POWER ON |
| C09 | | | | - | BYTE |
| - | 3 | 2, 2, 2,2, 2, 2,2, 2, 2,2, 2, 2... | 0 | 99 | 7/2 |

| | | | | | |
|---|---|---|---|---|---|
| **27900** | **REORG_LOG_LIMIT** | | | | S7 |
| - | Percentage of IPO buffer for enabling log file | | | | POWER ON |
| EXP, C02 | | | | - | BYTE |
| - | - | 1,1,1,1,1,1,1,1,1,1,1,1,1,1,1,1 | - | - | 0/0 |

© Siemens AG 2004 All Rights Reserved

## 2.6.5 Channel-specific memory settings

| | | | | | |
|---|---|---|---|---|---|
| **28000** | **MM_REORG_LOG_FILE_MEM** | | | | S7 |
| - | Memory space for REORG (DRAM) | | | | POWER ON |
| EXP, C02 | | | | - | DWORD |
| - | - | 50,50,50,50,50,50,50,50,50,50,50,50... | 1 | 500 | 7/2 |
| 810d | - | 10,10,10,10,10,10,10,10,10,10 | - | - | -/- |
| 840d-2a2c | - | 10,10,10,10,10,10,10,10,10,10 | - | - | -/- |
| 840d-4a1cg | - | 10,10,10,10,10,10,10,10,10,10 | - | - | -/- |
| 840d-6a2c | - | 10,10,10,10,10,10,10,10,10,10 | - | - | -/- |
| 840d-12a2c | - | 10,10,10,10,10,10,10,10,10,10 | - | - | -/- |
| 840d-31a10c | - | 10,10,10,10,10,10,10,10,10,10 | - | - | -/- |

| | | | | | |
|---|---|---|---|---|---|
| **28010** | **MM_NUM_REORG_LUD_MODULES** | | | | S7 |
| - | Number of blocks for local user variables in REORG (DRAM) | | | | POWER ON |
| EXP, C02 | | | | - | DWORD |
| - | - | 8,8,8,8,8,8,8,8,8,8,8,8,8,8,8,8 | 0 | SLMAXNUMBEROF_USERMODULES | 7/2 |

| | | | | | |
|---|---|---|---|---|---|
| **28020** | **MM_NUM_LUD_NAMES_TOTAL** | | | | S7 |
| - | Number of local user variables (DRAM) | | | | POWER ON |
| C02 | | | | - | DWORD |
| - | - | 400,400,400,400,400,400,400,400,400,400... | - | - | 7/2 |
| 810d | - | 200,200,200,200,200,200,200,200,200,200... | - | - | -/- |
| 840d-2a2c | - | 200,200,200,200,200,200,200,200,200,200... | - | - | -/- |
| 840d-4a1cg | - | 200,200,200,200,200,200,200,200,200,200... | - | - | -/- |
| 840d-6a2c | - | 200,200,200,200,200,200,200,200,200,200... | - | - | -/- |
| 840d-12a2c | - | 200,200,200,200,200,200,200,200,200,200... | - | - | -/- |
| 840d-31a10c | - | 200,200,200,200,200,200,200,200,200,200... | - | - | -/- |

© Siemens AG 2004 All Rights Reserved

| | | | | | |
|---|---|---|---|---|---|
| **28040** | **MM_LUD_VALUES_MEM** | | | | S7 |
| - | Memory space for local user variables (DRAM) | | | | POWER ON |
| C02 | | | | - | DWORD |
| - | - | 50,50,50,50,50,50,50,50,50,50,50,50... | - | - | 7/2 |
| 810d | - | 25,25,25,25,25,25,25,25,25,25 | - | - | -/- |
| 840d-2a2c | - | 25,25,25,25,25,25,25,25,25,25 | - | - | -/- |
| 840d-4a1cg | - | 25,25,25,25,25,25,25,25,25,25 | - | - | -/- |
| 840d-6a2c | - | 25,25,25,25,25,25,25,25,25,25 | - | - | -/- |
| 840d-12a2c | - | 25,25,25,25,25,25,25,25,25,25 | - | - | -/- |
| 840d-31a10c | - | 25,25,25,25,25,25,25,25,25,25 | - | - | -/- |

| | | | | | |
|---|---|---|---|---|---|
| **28050** | **MM_NUM_R_PARAM** | | | | S7 |
| - | Number of channel-specific R parameters (SRAM) | | | | POWER ON |
| C02 | | | | - | DWORD |
| - | - | 100,100,100,100,100,100,100,100,100,100... | 0 | 32535 | 7/2 |

| | | | | | |
|---|---|---|---|---|---|
| **28060** | **MM_IPO_BUFFER_SIZE** | | | | S7 |
| - | Number of NC blocks in IPO buffer (DRAM) | | | | POWER ON |
| C02 | | | | - | DWORD |
| - | - | 10,10,10,10,10,10,10,10,10,10,10,10... | 2 | 300 | 7/2 |

© Siemens AG 2004 All Rights Reserved

| | | | | | |
|---|---|---|---|---|---|
| **28070** | **MM_NUM_BLOCKS_IN_PREP** | | | | S7 |
| - | Number of blocks for block preparation (DRAM) | | | | POWER ON |
| EXP, C02 | | | | - | DWORD |
| - | - | 50,50,50,50,50,50,50,50,50,50,50,50,50... | 20 | - | 7/2 |
| 810d | - | 38,38,38,38,38,38,38,38,38,38 | - | - | -/- |
| 840d-2a2c | - | 38,38,38,38,38,38,38,38,38,38 | - | - | -/- |
| 840d-4a1cg | - | 38,38,38,38,38,38,38,38,38,38 | - | - | -/- |
| 840d-6a2c | - | 38,38,38,38,38,38,38,38,38,38 | - | - | -/- |
| 840d-12a2c | - | 38,38,38,38,38,38,38,38,38,38 | - | - | -/- |
| 840d-31a10c | - | 38,38,38,38,38,38,38,38,38,38 | - | - | -/- |

| | | | | | |
|---|---|---|---|---|---|
| **28080** | **MM_NUM_USER_FRAMES** | | | | S7 |
| - | Number of settable frames (SRAM) | | | | POWER ON |
| C11, C02 | | | | - | DWORD |
| - | - | 5,5,5,5,5,5,5,5,5,5,5,5,5,5,5,5 | 5 | 100 | 7/2 |

| | | | | | |
|---|---|---|---|---|---|
| **28081** | **MM_NUM_BASE_FRAMES** | | | | K2 |
| - | Number of base frames (SRAM) | | | | POWER ON |
| C02 | | | | - | DWORD |
| - | - | 1,1,1,1,1,1,1,1,1,1,1,1,1,1,1,1 | 0 | 16 | 7/2 |

| | | | | | |
|---|---|---|---|---|---|
| **28082** | **MM_SYSTEM_FRAME_MASK** | | | | K2 |
| - | System frames (SRAM) | | | | POWER ON |
| C02 | | | | - | DWORD |
| - | - | 0x21,0x21,0x21,0x21,0x21,0x21,0x21,0x21,0x21... | 0 | 0x0000007F | 7/2 |

| | | | | | |
|---|---|---|---|---|---|
| **28083** | **MM_SYSTEM_DATAFRAME_MASK** | | | | - |
| - | System frames (SRAM) | | | | POWER ON |
| C02 | | | | - | DWORD |
| - | - | 0x1F,0x1F,0x1F,0x1F,0x1F,0x1F,0x1F,0x1F,0x1F... | 0 | 0x0000007F | 7/2 |

© Siemens AG 2004 All Rights Reserved

| | | | | | |
|---|---|---|---|---|---|
| **28085** | **MM_LINK_TOA_UNIT** | | | | FBW,S7 |
| - | Assignment of a TO unit to a channel (SRAM) | | | | POWER ON |
| C02, C09 | | | | - | DWORD |
| - | - | 1,2,3,4,5,6,7,8,9,10,11, 12,13,14,15,16 | 1 | 10 | 7/2 |

| | | | | | |
|---|---|---|---|---|---|
| **28090** | **MM_NUM_CC_BLOCK_ELEMENTS** | | | | S7 |
| - | Number of block elements for compile cycles (DRAM) | | | | POWER ON |
| EXP, C02 | | | | - | DWORD |
| - | - | 0,0,0,0,0,0,0,0,0,0,0, 0,0,0,0 | 0 | 130 | 7/1 |

| | | | | | |
|---|---|---|---|---|---|
| **28100** | **MM_NUM_CC_BLOCK_USER_MEM** | | | | S7 |
| - | Size of block memory for compile cycles (DRAM), in KB | | | | POWER ON |
| EXP, C02 | | | | - | DWORD |
| - | - | 0,0,0,0,0,0,0,0,0,0,0, 0,0,0,0 | 0 | - | 7/1 |

| | | | | | |
|---|---|---|---|---|---|
| **28105** | **MM_NUM_CC_HEAP_MEM** | | | | S7 |
| - | Heap memory in kbytes for compile-cycle applications (DRAM) | | | | POWER ON |
| EXP, C02 | | | | - | DWORD |
| - | - | 0,0,0,0,0,0,0,0,0,0,0, 0,0,0,0 | - | - | 7/2 |

| | | | | | |
|---|---|---|---|---|---|
| **28150** | **MM_NUM_VDIVAR_ELEMENTS** | | | | P3 |
| - | Number of elements for writing PLC variables | | | | POWER ON |
| C02 | | | | - | DWORD |
| - | - | 0,0,0,0,0,0,0,0,0,0,0, 0,0,0,0 | - | - | 7/2 |

| | | | | | |
|---|---|---|---|---|---|
| **28160** | **MM_NUM_LINKVAR_ELEMENTS** | | | | B3 |
| - | Number of elements for writing NCU-link variables | | | | POWER ON |
| C02 | | | | - | DWORD |
| - | - | 0,0,0,0,0,0,0,0,0,0,0, 0,0,0,0 | - | - | 7/2 |

| | | | | | |
|---|---|---|---|---|---|
| **28180** | **MM_MAX_TRACE_DATAPOINTS** | | | | BA,S5,FBSY |
| - | Length of the trace data buffer | | | | POWER ON |
| EXP, C02, C06 | | | | NBUP | DWORD |
| - | - | 100,100,100,100,100,1 00,100,100,100... | 0 | 2000 | 2/2 |

© Siemens AG 2004 All Rights Reserved

| | | | | | |
|---|---|---|---|---|---|
| **28200** | **MM_NUM_PROTECT_AREA_CHAN** | | | | S7 |
| - | Number of files for channel-specific protection zones (SRAM) | | | | POWER ON |
| C02, C06, C09 | | | | - | DWORD |
| - | - | 0,0,0,0,0,0,0,0,0,0,0,0,0,0,0,0 | 0 | 10 | 7/2 |

| | | | | | |
|---|---|---|---|---|---|
| **28210** | **MM_NUM_PROTECT_AREA_ACTIVE** | | | | S7 |
| - | Number of simultaneously active protection zones in one channel | | | | POWER ON |
| C11, C02, C06, C09 | | | | - | DWORD |
| - | - | 0,0,0,0,0,0,0,0,0,0,0,0,0,0,0,0 | 0 | 10 | 7/2 |

| | | | | | |
|---|---|---|---|---|---|
| **28212** | **MM_NUM_PROTECT_AREA_CONTOUR** | | | | S7 |
| - | Elements for active protection zones (DRAM) | | | | POWER ON |
| C11, C02, C06, C09 | | | | - | DWORD |
| - | - | 30,30,30,30,30,30,30,30,30,30,30,30,30,30,30,30... | 0 | 50 | 7/2 |

| | | | | | |
|---|---|---|---|---|---|
| **28250** | **MM_NUM_SYNC_ELEMENTS** | | | | S5,FBSY |
| - | Number of elements for expressing the synchronized actions | | | | POWER ON |
| C02 | | | | - | DWORD |
| - | - | 159,159,159,159,159,159,159,159,159,159,159,159,159,159,159,159... | - | - | 7/2 |

| | | | | | |
|---|---|---|---|---|---|
| **28252** | **MM_NUM_FCTDEF_ELEMENTS** | | | | S5,FBSY |
| - | Number of FCTDEF elements | | | | POWER ON |
| C02 | | | | - | DWORD |
| - | - | 3,3,3,3,3,3,3,3,3,3,3,3,3,3,3,3 | 0 | 100 | 7/2 |

| | | | | | |
|---|---|---|---|---|---|
| **28254** | **MM_NUM_AC_PARAM** | | | | FBSY |
| - | Number of parameters $AC_PARAM | | | | POWER ON |
| C02 | | | | - | DWORD |
| - | - | 50,50,50,50,50,50,50,50,50,50,50,50,50,50,50,50... | 0 | 20000 | 7/2 |

| | | | | | |
|---|---|---|---|---|---|
| **28255** | **MM_BUFFERED_AC_PARAM** | | | | FBSY |
| - | $AC_PARAM[] is stored in SRAM. | | | | POWER ON |
| C02 | | | | - | DWORD |
| - | - | 0,0,0,0,0,0,0,0,0,0,0,0,0,0,0,0 | 0 | 1 | 7/2 |

© Siemens AG 2004 All Rights Reserved

| | | | | | |
|---|---|---|---|---|---|
| **28256** | **MM_NUM_AC_MARKER** | | | | FBSY |
| - | Number of flags $AC_MARKER | | | | POWER ON |
| C02 | | | | - | DWORD |
| - | - | 8,8,8,8,8,8,8,8,8,8,8,8,8,8,8,8 | 0 | 20000 | 7/2 |

| | | | | | |
|---|---|---|---|---|---|
| **28257** | **MM_BUFFERED_AC_MARKER** | | | | FBSY |
| - | $AC_MARKER[] is stored in SRAM. | | | | POWER ON |
| C02 | | | | - | DWORD |
| - | - | 0,0,0,0,0,0,0,0,0,0,0,0,0,0,0,0 | 0 | 1 | 7/2 |

| | | | | | |
|---|---|---|---|---|---|
| **28258** | **MM_NUM_AC_TIMER** | | | | S5,FBSY |
| - | Number of time variables $AC_TIMER | | | | POWER ON |
| C02 | | | | - | DWORD |
| - | - | 0,0,0,0,0,0,0,0,0,0,0,0,0,0,0,0 | 0 | 10000 | 7/2 |

| | | | | | |
|---|---|---|---|---|---|
| **28260** | **NUM_AC_FIFO** | | | | S5,FBSY |
| - | Number of variables $AC_FIFO1 ... | | | | POWER ON |
| C01 | | | | - | DWORD |
| - | - | 0,0,0,0,0,0,0,0,0,0,0,0,0,0,0,0 | 0 | 10 | 7/2 |

| | | | | | |
|---|---|---|---|---|---|
| **28262** | **START_AC_FIFO** | | | | S5,FBSY |
| - | FIFO variables store from R parameter | | | | POWER ON |
| C01 | | | | - | DWORD |
| - | - | 0,0,0,0,0,0,0,0,0,0,0,0,0,0,0,0 | 0 | 32535 | 7/2 |

| | | | | | |
|---|---|---|---|---|---|
| **28264** | **LEN_AC_FIFO** | | | | S5,M5,FBSY |
| - | Length of the FIFO variables $AC_FIFO ... | | | | POWER ON |
| C01 | | | | - | DWORD |
| - | - | 0,0,0,0,0,0,0,0,0,0,0,0,0,0,0,0 | 0 | 32535 | 7/2 |

| | | | | | |
|---|---|---|---|---|---|
| **28266** | **MODE_AC_FIFO** | | | | S5,FBSY |
| - | Mode of FIFO processing | | | | POWER ON |
| C01 | | | | - | BYTE |
| - | - | 0,0,0,0,0,0,0,0,0,0,0,0,0,0,0,0 | 0 | - | 7/2 |

© Siemens AG 2004 All Rights Reserved

| | | | | | |
|---|---|---|---|---|---|
| **28274** | **MM_NUM_AC_SYSTEM_PARAM** | | | | FBSY |
| - | Reserved (S/DRAM) | | | | POWER ON |
| EXP, C02 | | | | - | DWORD |
| - | - | 0,0,0,0,0,0,0,0,0,0,0,0,0,0,0,0 | 0 | 20000 | 7/2 |

| | | | | | |
|---|---|---|---|---|---|
| **28276** | **MM_NUM_AC_SYSTEM_MARKER** | | | | FBSY |
| - | Reserved (S/DRAM) | | | | POWER ON |
| EXP, C02 | | | | - | DWORD |
| - | - | 0,0,0,0,0,0,0,0,0,0,0,0,0,0,0,0 | 0 | 20000 | 7/2 |

| | | | | | |
|---|---|---|---|---|---|
| **28290** | **MM_SHAPED_TOOLS_ENABLE** | | | | - |
| - | Enable TRC for contour tools | | | | POWER ON |
| C01, C08, C02 | | | | - | BOOLEAN |
| - | - | FALSE,FALSE,FALSE,FALSE,FALSE,FALSE... | - | - | 7/0 |

| | | | | | |
|---|---|---|---|---|---|
| **28300** | **MM_PROTOC_USER_ACTIVE** | | | | D1,OEM |
| - | Activ. of recording for a user. | | | | POWER ON |
| C02 | | | | - | BOOLEAN |
| - | 10 | TRUE, FALSE, FALSE, FALSE, FALSE, TRUE, TRUE, FALSE, FALSE... | - | - | 1/1 |

| | | | | | |
|---|---|---|---|---|---|
| **28301** | **MM_PROTOC_NUM_ETP_OEM_TYP** | | | | D1,OEM |
| - | Number of OEM event types ETP. | | | | POWER ON |
| C02 | | | | - | DWORD |
| - | 10 | 0, 0, 0, 0, 0, 0, 0, 0, 0, 0... | 0 | 20 | 1/1 |

| | | | | | |
|---|---|---|---|---|---|
| **28302** | **MM_PROTOC_NUM_ETP_STD_TYP** | | | | - |
| - | Number of standard event types ETP | | | | POWER ON |
| C02 | | | | - | DWORD |
| - | 10 | 28, 0, 0, 0, 0, 20, 20, 0, 0, 0... | 0 | 48 | 1/1 |

© Siemens AG 2004 All Rights Reserved

| | | | | | |
|---|---|---|---|---|---|
| **28400** | **MM_ABSBLOCK** | | | | S7 |
| - | activate block display w. absolute values | | | | POWER ON |
| EXP, C02 | | | | - | DWORD |
| - | - | 0,0,0,0,0,0,0,0,0,0,0,0,0,0,0,0 | - | - | 7/2 |

| | | | | | |
|---|---|---|---|---|---|
| **28402** | **MM_ABSBLOCK_BUFFER_CONF** | | | | S7 |
| - | Setting of upload buffer size | | | | POWER ON |
| EXP, C02 | | | | - | DWORD |
| - | 2 | 0, 0,0, 0,0, 0,0, 0,0, 0,0, 0,0, 0... | - | - | 7/2 |

| | | | | | |
|---|---|---|---|---|---|
| **28450** | **MM_TOOL_DATA_CHG_BUFF_SIZE** | | | | - |
| - | Buffer size of tool data change (DRAM) | | | | POWER ON |
| -, C02, C06 | | | | - | DWORD |
| - | - | 60,60,60,60,60,60,60,60,60,60,60,60,60,60,60,60... | 0 | 2500 | 7/2 |

| | | | | | |
|---|---|---|---|---|---|
| **28500** | **MM_PREP_TASK_STACK_SIZE** | | | | S7 |
| - | Stack size of preparation task (DRAM) | | | | POWER ON |
| EXP, C02 | | | | - | DWORD |
| - | - | 45,45,45,45,45,45,45,45,45,45,45,45,45,45,45,45... | 45 | 70 | 0/0 |

| | | | | | |
|---|---|---|---|---|---|
| **28520** | **MM_MAX_AXISPOLY_PER_BLOCK** | | | | S7 |
| - | Maximal number of axial polynomials per block | | | | POWER ON |
| C02 | | | | - | DWORD |
| - | - | 3,3,3,3,3,3,3,3,3,3,3,3,3,3,3,3 | 1 | 5 | 0/0 |

| | | | | | |
|---|---|---|---|---|---|
| **28530** | **MM_PATH_VELO_SEGMENTS** | | | | K1 |
| - | Number of memory units for limiting path veloc. in the block. | | | | POWER ON |
| C02 | | | | - | DWORD |
| - | - | 0,0,0,0,0,0,0,0,0,0,0,0,0,0,0,0 | 0 | 100 | 7/2 |

| | | | | | |
|---|---|---|---|---|---|
| **28535** | **MM_FEED_PROFILE_SEGMENTS** | | | | - |
| - | Displ. memory element for feed profiles | | | | POWER ON |
| C02 | | | | - | DWORD |
| - | - | 1,1,1,1,1,1,1,1,1,1,1,1,1,1,1,1 | 1 | 10 | 7/2 |

© Siemens AG 2004 All Rights Reserved

| | | | | | |
|---|---|---|---|---|---|
| **28540** | **MM_ARCLENGTH_SEGMENTS** | | | | K1 |
| - | Number of memory units for repres. arc length function per block | | | | POWER ON |
| C02 | | | | - | DWORD |
| - | - | 0,0,0,0,0,0,0,0,0,0,0,0,0,0,0,0 | 0 | 100 | 7/2 |

| | | | | | |
|---|---|---|---|---|---|
| **28560** | **MM_SEARCH_RUN_RESTORE_MODE** | | | | K1, K2 |
| - | Data restore after simulation | | | | POWER ON |
| C02 | | | | - | DWORD |
| - | - | 0x0,0x0,0x0,0x0,0x0,0x0,0x0,0x0,0x0,0x0... | 0 | 0x00000001 | 7/2 |

| | | | | | |
|---|---|---|---|---|---|
| **28580** | **MM_ORIPATH_CONFIG** | | | | - |
| - | Configuration for ORIPATH | | | | POWER ON |
| C02 | | | | - | BYTE |
| - | - | 0,0,0,0,0,0,0,0,0,0,0,0,0,0,0,0 | 0 | 1 | 1/1 |

© Siemens AG 2004 All Rights Reserved

# 2.7 Axis-specific machine data

The display of the machine data has been extended in SW Version 4 and higher. The options Display filters and Attributes have been newly introduced.

**Display filters**

The quantity of machine data displayed on the operator panel can be limited to the machine data of interest by means of the display filters. Machine data are displayed on the operator panel if at least one of the filters indicated in the respective machine data has been activated by the user or if the mode “All machine data“ has been set. The short descriptions of the filters indicated are used again in the operator interface for filter activation. They have the following meaning:

- A01 Configuration (including memory)
- A02 Measuring system
- A03 Machine geometry
- A04 Velocities / accelerations
- A05 Monitoring / limitations
- A06 Spindle
- A07 Controller data
- A08 Status data
- A09 Overrides / compensations
- A10 Technological functions
- A11 Standard machine
- A12 NC-Language ISO-Dialect
- EXP Expert mode

**Attributes**

In some machine data, you will find short identifiers with the following meaning under attributes:

- NBUP No back-up: the data is not entered in data back-up
- ODLD Only download: the data can only be loaded from the file
- READ Read only: the data can only be read
- NDLD No download: the data cannot be loaded from the file
- SFCO Configuration safety integrated
- SCAL Scaling Alarm

© Siemens AG 2004 All Rights Reserved

- LINK Link description
- CTEQ Must be equal for all containers
- CTDE Container description

The fields of the machine data table elements are completed as follows:

**System** You will find the identifiers such as:
iajc with the meaning i axes and j channels for example

6a2c 6 axes, 2 channels.

**Note**

Machine data values which may differ according to the system used are listed in additional lines below the table header. In these cases, the fourth line is the standard assignment, the fifth line and any further lines contain differing values for the systems stated. The minus sign in a field means: The standard values stated in line 4 applies. The entry "-1" stated under protection means that there is no machine data for the system stated.

| | | | | | |
|---|---|---|---|---|---|
| **Number** | **MD identifier** | | | | Cross reference |
| Unit | Name | | | | Active |
| Display filters | | | | Attributes | D type |
| System | Dimension | Standard value | Minimum value | Maximum value | Protect. Level |
| System | Dimension | Standard value | Minimum value | Maximum value | Protect. Level |

## 2.7.1 Configuration

Configuration

| | | | | | |
|---|---|---|---|---|---|
| **30000** | **IS_POS_AX** | | | | - |
| - | to be defined | | | | POWER ON |
| EXP, A01 | | | | - | BOOLEAN |
| - | - | FALSE | - | - | 7/2 |
| 810d | - | - | - | - | -1/- |
| 840d-2a2c | - | - | - | - | -1/- |
| 840d-6a2c | - | - | - | - | -1/- |
| 840d-12a2c | - | - | - | - | -1/- |
| 840d-31a10c | - | - | - | - | -1/- |

© Siemens AG 2004 All Rights Reserved

| 30100 | CTRLOUT_SEGMENT_NR | | | | G2 |
|---|---|---|---|---|---|
| - | Setpoint assignment: Drive type | | | | POWER ON |
| EXP, A01 | | | | - | BYTE |
| - | 1 | 1 | 1 | 5 | 7/2 |
| 810d | - | 1 | 1 | 1 | -1/- |
| 840di-basic | - | 5 | 5 | 5 | -1/- |
| 840di-universal | - | 5 | 5 | 5 | -1/- |
| 840di-plus | - | 5 | 5 | 5 | -1/- |

| 30110 | CTRLOUT_MODULE_NR | | | | G2 |
|---|---|---|---|---|---|
| - | Setpoint assignment: Drive number/module no. | | | | POWER ON |
| A01, A11 | | | | - | BYTE |
| - | 1 | 1,2,3,4,5,6,7,8,9,10,11, 12,13,14,15,16,17,18... | 1 | 31 | 7/2 |

| 30120 | CTRLOUT_NR | | | | G2 |
|---|---|---|---|---|---|
| - | Setpoint assignment: Setpoint output on drive submodule/module | | | | POWER ON |
| EXP, A01 | | | | - | BYTE |
| - | 1 | 1 | 1 | 3 | 2/2 |

| 30130 | CTRLOUT_TYPE | | | | G2,S6 |
|---|---|---|---|---|---|
| - | Output type of setpoint | | | | POWER ON |
| A01, A11 | | | | - | BYTE |
| - | 1 | 0 | 0 | 3 | 7/2 |

| 30132 | IS_VIRTUAL_AX | | | | M3 |
|---|---|---|---|---|---|
| - | Axis is a virtual axis | | | | POWER ON |
| A01 | | | | CTEQ | BOOLEAN |
| - | 1 | FALSE | - | - | 7/2 |

| 30134 | IS_UNIPOLAR_OUTPUT | | | | G2 |
|---|---|---|---|---|---|
| - | Setpoint output is unipolar | | | | POWER ON |
| A01 | | | | - | BYTE |
| - | 1 | 0 | 0 | 2 | 7/2 |

| 30200 | NUM_ENCS | | | | G2 |
|---|---|---|---|---|---|
| - | Number of encoders | | | | POWER ON |
| A01, A02 | | | | - | BYTE |
| - | - | 1 | 0 | 2 | 7/2 |

© Siemens AG 2004 All Rights Reserved

| **30210** | **ENC_SEGMENT_NR** | | | | G2 |
|---|---|---|---|---|---|
| - | Actual-value assignment: drive type | | | | POWER ON |
| EXP, A01, A02 | | | | - | BYTE |
| - | 2 | 1, 1 | 1 | 5 | 7/2 |
| 810d | - | 1, 1 | 1 | 1 | -1/- |
| 840di-basic | - | 5, 5 | 5 | 5 | -1/- |
| 840di-universal | - | 5, 5 | 5 | 5 | -1/- |
| 840di-plus | - | 5, 5 | 5 | 5 | -1/- |

| **30220** | **ENC_MODULE_NR** | | | | G2 |
|---|---|---|---|---|---|
| - | Actual value assignment: Drive number/measuring circuit number | | | | POWER ON |
| A01, A02, A11 | | | | - | BYTE |
| - | 2 | 1, 1,2, 2,3, 3,4, 4,5, 5,6, 6,7, 7... | 1 | 31 | 7/2 |

| **30230** | **ENC_INPUT_NR** | | | | G2 |
|---|---|---|---|---|---|
| - | Actual value assignm.: Input on drive module/meas. circuit board | | | | POWER ON |
| A01, A02, A11 | | | | - | BYTE |
| - | 2 | 1, 2 | 1 | 3 | 7/2 |
| 810d | - | 1, 1 | - | 2 | -/- |

| **30240** | **ENC_TYPE** | | | | G2,R1 |
|---|---|---|---|---|---|
| - | Type of actual value sensing (actual position value) | | | | POWER ON |
| A01, A02, A11 | | | | - | BYTE |
| - | 2 | 0, 0 | 0 | 5 | 7/2 |

| **30242** | **ENC_IS_INDEPENDENT** | | | | G2 |
|---|---|---|---|---|---|
| - | Encoder is independent | | | | NEW CONF |
| A02, A11 | | | | - | BYTE |
| - | 2 | 0, 0 | 0 | 3 | 7/2 |

| **30244** | **ENC_MEAS_TYPE** | | | | - |
|---|---|---|---|---|---|
| - | Encoder meas. type | | | | POWER ON |
| A01, A02, A11 | | | | - | BYTE |
| - | 2 | 1, 1 | 0 | 1 | 7/2 |
| 810d | - | - | - | - | 0/0 |
| 840d-2a2c | - | - | - | - | 0/0 |
| 840d-6a2c | - | - | - | - | 0/0 |
| 840d-12a2c | - | - | - | - | 0/0 |
| 840d-31a10c | - | - | - | - | 0/0 |

© Siemens AG 2004 All Rights Reserved

| | | | | | |
|---|---|---|---|---|---|
| **30250** | **ACT_POS_ABS** | | | | R1 |
| - | Internal encoder position | | | | POWER ON |
| EXP, A02, A08 | | | | ODLD, -, - | DOUBLE |
| - | 2 | 0.0, 0.0 | - | - | 7/2 |

| | | | | | |
|---|---|---|---|---|---|
| **30260** | **ABS_INC_RATIO** | | | | R1 |
| - | Absolute encoder: ratio of absolute to incremental resolution | | | | POWER ON |
| EXP, A01, A02 | | | | - | DWORD |
| - | 2 | 4, 4 | - | - | 7/2 |

| | | | | | |
|---|---|---|---|---|---|
| **30270** | **ENC_ABS_BUFFERING** | | | | FBA,R1 |
| - | Absolute encoder: position buffering mode | | | | POWER ON |
| EXP, A01, A02 | | | | - | BYTE |
| - | 2 | 0, 0 | 0 | 1 | 7/2 |

| | | | | | |
|---|---|---|---|---|---|
| **30300** | **IS_ROT_AX** | | | | R2 |
| - | Rotary axis / spindle | | | | POWER ON |
| A01, A06, A11 | | | | SCAL, CTEQ | BOOLEAN |
| - | - | FALSE | - | - | 7/2 |

| | | | | | |
|---|---|---|---|---|---|
| **30310** | **ROT_IS_MODULO** | | | | R2 |
| - | Modulo conversion for rotary axis / spindle | | | | POWER ON |
| A01, A06, A11 | | | | CTEQ | BOOLEAN |
| - | - | FALSE | - | - | 7/2 |

| | | | | | |
|---|---|---|---|---|---|
| **30320** | **DISPLAY_IS_MODULO** | | | | R2 |
| - | Modulo 360 degrees display for rotary axes and spindle | | | | POWER ON |
| A01, A06, A11 | | | | CTEQ | BOOLEAN |
| - | - | FALSE | - | - | 7/2 |

| | | | | | |
|---|---|---|---|---|---|
| **30330** | **MODULO_RANGE** | | | | R2 |
| degrees | Size of modulo range. | | | | RESET |
| EXP, A01 | | | | CTEQ | DOUBLE |
| - | - | 360.0 | 1.0 | 360000000.0 | 7/2 |

| | | | | | |
|---|---|---|---|---|---|
| **30340** | **MODULO_RANGE_START** | | | | R2 |
| degrees | Modulo range start position | | | | RESET |
| EXP, A01 | | | | CTEQ | DOUBLE |
| - | - | 0.0 | - | - | 7/2 |

© Siemens AG 2004 All Rights Reserved

| 30350 | SIMU_AX_VDI_OUTPUT | | | | G2 |
|---|---|---|---|---|---|
| - | Output of axis signals with simulation axes | | | | POWER ON |
| A01, A06 | | | | CTEQ | BOOLEAN |
| - | - | FALSE | - | - | 7/2 |

| 30450 | IS_CONCURRENT_POS_AX | | | | P2 |
|---|---|---|---|---|---|
| - | Competing positioning axis | | | | RESET |
| EXP, A01 | | | | CTEQ | BOOLEAN |
| - | - | FALSE | - | - | 7/2 |

| 30455 | MISC_FUNCTION_MASK | | | | R2 |
|---|---|---|---|---|---|
| - | Axis functions | | | | RESET |
| A06, A10 | | | | CTEQ | DWORD |
| - | - | 0x00 | 0 | 0x40 | 7/2 |

| 30460 | BASE_FUNCTION_MASK | | | | - |
|---|---|---|---|---|---|
| - | Axis functions | | | | POWER ON |
| A01 | | | | CTEQ | DWORD |
| - | - | 0x00 | 0 | 0xFF | 7/2 |

| 30465 | AXIS_LANG_SUB_MASK | | | | - |
|---|---|---|---|---|---|
| - | substitution of NC-instructions | | | | POWER ON |
| N01 | | | | - | DWORD |
| - | - | 0 | 0 | 3 | 7/2 |

| 30500 | INDEX_AX_ASSIGN_POS_TAB | | | | T1 |
|---|---|---|---|---|---|
| - | Axis is indexing axis | | | | RESET |
| A01, A10 | | | | - | BYTE |
| - | - | 0 | 0 | 3 | 7/2 |

| 30501 | INDEX_AX_NUMERATOR | | | | T1 |
|---|---|---|---|---|---|
| mm, degrees | Indexing axis equidistant positions numerator | | | | RESET |
| A01, A10 | | | | - | DOUBLE |
| - | - | 0.0 | - | - | 7/2 |

| 30502 | INDEX_AX_DENOMINATOR | | | | T1 |
|---|---|---|---|---|---|
| - | Indexing axis equidistant positions denominator | | | | RESET |
| A01, A10 | | | | - | DWORD |
| - | - | 1 | 1 | - | 7/2 |

© Siemens AG 2004 All Rights Reserved

| | | | | | |
|---|---|---|---|---|---|
| **30503** | **INDEX_AX_OFFSET** | | | | T1 |
| mm, degrees | Indexing axis with equidistant positions first index position | | | | RESET |
| A01, A10 | | | | - | DOUBLE |
| - | - | 0.0 | - | - | 7/2 |

| | | | | | |
|---|---|---|---|---|---|
| **30505** | **HIRTH_IS_ACTIVE** | | | | T1 |
| - | Axis is indexing axis with Hirth tooth system | | | | RESET |
| A01, A10 | | | | CTEQ | BOOLEAN |
| - | - | FALSE | - | - | 7/2 |

| | | | | | |
|---|---|---|---|---|---|
| **30550** | **AXCONF_ASSIGN_MASTER_CHAN** | | | | K5 |
| - | Initial setting of channel for change of axis | | | | POWER ON |
| A01, A06, A10 | | | | - | BYTE |
| - | - | 0 | 0 | 10 | 7/2 |

| | | | | | |
|---|---|---|---|---|---|
| **30552** | **AUTO_GET_TYPE** | | | | S1,K5 |
| - | Automatic GET for get axis | | | | POWER ON |
| EXP, A06, A10 | | | | - | BYTE |
| - | - | 1 | 0 | 2 | 7/2 |

| | | | | | |
|---|---|---|---|---|---|
| **30554** | **AXCONF_ASSIGN_MASTER_NCU** | | | | B3 |
| - | Initial setting which NCU creates for the axis setpoints | | | | POWER ON |
| A01, A06, A10 | | | | - | BYTE |
| - | - | 0 | 0 | 16 | 7/2 |

| | | | | | |
|---|---|---|---|---|---|
| **30560** | **IS_LOCAL_LINK_AXIS** | | | | B3 |
| - | Axis is a local link axis | | | | POWER ON |
| EXP, A01 | | | | - | BOOLEAN |
| - | - | FALSE | - | - | 7/2 |

| | | | | | |
|---|---|---|---|---|---|
| **30600** | **FIX_POINT_POS** | | | | K1 |
| mm, degrees | Fixed-value positions of axis with G75 | | | | POWER ON |
| A03, A10 | | | | - | DOUBLE |
| - | 2 | 0.0, 0.0 | - | - | 7/2 |

| | | | | | |
|---|---|---|---|---|---|
| **30800** | **WORKAREA_CHECK_TYPE** | | | | A2 |
| - | Type of check of working area limitations | | | | NEW CONF |
| - | | | | CTEQ | BOOLEAN |
| - | - | FALSE | - | - | 7/2 |

© Siemens AG 2004 All Rights Reserved

## 2.7.2 Encoder matching

| | | | | | |
|---|---|---|---|---|---|
| **31000** | **ENC_IS_LINEAR** | | | | G2 |
| - | Direct measuring system (linear scale) | | | | POWER ON |
| A02, A11 | | | | - | BOOLEAN |
| - | 2 | FALSE, FALSE | - | - | 7/2 |

| | | | | | |
|---|---|---|---|---|---|
| **31010** | **ENC_GRID_POINT_DIST** | | | | G2 |
| mm | Division period for linear scales | | | | POWER ON |
| A02, A11 | | | | - | DOUBLE |
| - | 2 | 0.01, 0.01 | - | - | 7/2 |

| | | | | | |
|---|---|---|---|---|---|
| **31020** | **ENC_RESOL** | | | | G2 |
| - | Encoder lines per revolution | | | | POWER ON |
| A02, A11 | | | | - | DWORD |
| - | 2 | 2048, 2048 | - | - | 7/2 |

| | | | | | |
|---|---|---|---|---|---|
| **31025** | **ENC_PULSE_MULT** | | | | K4 |
| - | Encoder multiplication (high-resolution) | | | | POWER ON |
| EXP, A01, A02 | | | | - | DWORD |
| - | 2 | 2048, 2048 | - | - | 7/2 |

| | | | | | |
|---|---|---|---|---|---|
| **31030** | **LEADSCREW_PITCH** | | | | G2 |
| mm | Pitch of leadscrew | | | | POWER ON |
| A02, A11 | | | | - | DOUBLE |
| - | - | 10.0 | - | - | 7/2 |

| | | | | | |
|---|---|---|---|---|---|
| **31040** | **ENC_IS_DIRECT** | | | | G2 |
| - | Encoder mounted directly on the machine | | | | POWER ON |
| A02, A11 | | | | - | BOOLEAN |
| - | 2 | FALSE, FALSE | - | - | 7/2 |

| | | | | | |
|---|---|---|---|---|---|
| **31044** | **ENC_IS_DIRECT2** | | | | S1 |
| - | Encoder mounted on the additional gearbox | | | | NEW CONF |
| A02 | | | | - | BOOLEAN |
| - | 2 | FALSE, FALSE | - | - | 7/2 |

© Siemens AG 2004 All Rights Reserved

| 31050 | DRIVE_AX_RATIO_DENOM | | | | G2 |
|---|---|---|---|---|---|
| - | Denominator load gearbox | | | | POWER ON |
| A02, A11 | | | | - | DWORD |
| - | 6 | 1, 1, 1, 1, 1, 1 | 1 | 2147000000 | 7/2 |

| 31060 | DRIVE_AX_RATIO_NUMERA | | | | G2 |
|---|---|---|---|---|---|
| - | Numerator load gearbox | | | | POWER ON |
| A02, A11 | | | | - | DWORD |
| - | 6 | 1, 1, 1, 1, 1, 1 | -2147000000 | 2147000000 | 7/2 |

| 31064 | DRIVE_AX_RATIO2_DENOM | | | | S1 |
|---|---|---|---|---|---|
| - | Add. gearbox denominator | | | | NEW CONF |
| A02 | | | | - | DWORD |
| - | - | 1 | 1 | 2147000000 | 7/2 |

| 31066 | DRIVE_AX_RATIO2_NUMERA | | | | S1 |
|---|---|---|---|---|---|
| - | Counter of additional gearbox | | | | NEW CONF |
| A02 | | | | - | DWORD |
| - | - | 1 | -2147000000 | 2147000000 | 7/2 |

| 31070 | DRIVE_ENC_RATIO_DENOM | | | | G2 |
|---|---|---|---|---|---|
| - | Denominator measuring gearbox | | | | POWER ON |
| A02, A11 | | | | - | DWORD |
| - | 2 | 1, 1 | 1 | 2147000000 | 7/2 |

| 31080 | DRIVE_ENC_RATIO_NUMERA | | | | G2 |
|---|---|---|---|---|---|
| - | Numerator measuring gearbox | | | | POWER ON |
| A02, A11 | | | | - | DWORD |
| - | 2 | 1, 1 | 1 | 2147000000 | 7/2 |

| 31090 | JOG_INCR_WEIGHT | | | | H1,G2 |
|---|---|---|---|---|---|
| mm, degrees | Evaluation of an increment with INC/handwheel | | | | RESET |
| A01, A12 | | | | CTEQ | DOUBLE |
| - | 2 | 0.001, 0.00254 | - | - | 7/2 |

| 31122 | BERO_DELAY_TIME_PLUS | | | | S1 |
|---|---|---|---|---|---|
| s | BERO delay time plus | | | | NEW CONF |
| A02, A06 | | | | - | DOUBLE |
| - | 2 | 0.000110, 0.000110 | - | - | 7/2 |

© Siemens AG 2004 All Rights Reserved

| 31123 | BERO_DELAY_TIME_MINUS | | | | S1 |
|---|---|---|---|---|---|
| s | BERO delay time minus | | | | NEW CONF |
| A02, A06 | | | | - | DOUBLE |
| - | 2 | 0.000078, 0.000078 | - | - | 7/2 |

| 31200 | SCALING_FACTOR_G70_G71 | | | | G2 |
|---|---|---|---|---|---|
| - | Factor for converting values while G70/G71 is active | | | | POWER ON |
| EXP, A01 | | | | CTEQ | DOUBLE |
| - | - | 25.4 | 1.e-9 | - | 7/2 |

| 31500 | AXIS_NUMBER_FOR_MONITORING | | | | S6 |
|---|---|---|---|---|---|
| - | Setpoint of this axis output for service purposes | | | | POWER ON |
| A01 | | | | - | DWORD |
| - | 1 | 0 | 0 | 31 | 7/2 |

| 31510 | OFFSETVALUE_FOR_MONITORING | | | | S6 |
|---|---|---|---|---|---|
| V | Offset voltage for service setpoint | | | | NEW CONF |
| A01 | | | | - | DOUBLE |
| - | 1 | 0.0 | -10.0 | 10.0 | 7/2 |

| 31520 | GAIN_FOR_MONITORING | | | | S6 |
|---|---|---|---|---|---|
| - | Gain for service setpoint | | | | NEW CONF |
| A01 | | | | - | DOUBLE |
| - | 1 | 1.0 | -100.0 | 100.0 | 7/2 |

| 31600 | TRACE_VDI_AX | | | | - |
|---|---|---|---|---|---|
| - | Trace-spec. f. axial VDI signals | | | | POWER ON |
| EXP, N06 | | | | NBUP | BOOLEAN |
| - | - | FALSE | - | - | 2/2 |

## 2.7.3 Closed-loop control

| 32000 | MAX_AX_VELO | | | | G2 |
|---|---|---|---|---|---|
| mm/min, rev/min | Maximum axis velocity | | | | NEW CONF |
| A11, A04 | | | | CTEQ | DOUBLE |
| - | - | 10000. | - | - | 7/2 |

© Siemens AG 2004 All Rights Reserved

| 32010 | JOG_VELO_RAPID | | | | H1 |
|---|---|---|---|---|---|
| mm/min, rev/min | Rapid traverse in jog mode | | | | RESET |
| A11, A04 | | | | CTEQ | DOUBLE |
| - | - | 10000. | - | - | 7/2 |

| 32020 | JOG_VELO | | | | H1 |
|---|---|---|---|---|---|
| mm/min, rev/min | Jog axis velocity | | | | RESET |
| A11, A04 | | | | CTEQ | DOUBLE |
| - | - | 2000. | - | - | 7/2 |

| 32040 | JOG_REV_VELO_RAPID | | | | H1 |
|---|---|---|---|---|---|
| mm/rev | Revolutional feedrate in JOG with rapid traverse override | | | | RESET |
| A11, A04 | | | | CTEQ | DOUBLE |
| - | - | 2.5 | - | - | 7/2 |

| 32050 | JOG_REV_VELO | | | | H1 |
|---|---|---|---|---|---|
| mm/rev | Revolutional feedrate in JOG | | | | RESET |
| A11, A04 | | | | CTEQ | DOUBLE |
| - | - | 0.5 | - | - | 7/2 |

| 32060 | POS_AX_VELO | | | | P2 |
|---|---|---|---|---|---|
| mm/min, rev/min | Initial setting for positioning axis velocity | | | | RESET |
| A12, A04 | | | | CTEQ | DOUBLE |
| - | - | 10000. | - | - | 7/2 |

| 32070 | CORR_VELO | | | | H1,K2,W4 |
|---|---|---|---|---|---|
| % | Axis velocity for handwheel override | | | | RESET |
| A04 | | | | CTEQ | DOUBLE |
| - | - | 50.0 | - | - | 7/2 |

| 32074 | FRAME_OR_CORRPOS_NOTALLOWED | | | | H1,K2,W4 |
|---|---|---|---|---|---|
| - | Fixed feedrates for rotary axes | | | | POWER ON |
| A01 | | | | CTEQ | DWORD |
| - | - | 0 | 0 | 0xFFF | 7/2 |

| 32080 | HANDWH_MAX_INCR_SIZE | | | | H1 |
|---|---|---|---|---|---|
| mm, degrees | Limitation of selected increment | | | | RESET |
| A05, A10 | | | | CTEQ | DOUBLE |
| - | - | 0.0 | - | - | 7/2 |

© Siemens AG 2004 All Rights Reserved

| 32082 | HANDWH_MAX_INCR_VELO_SIZE | | | | H1 |
|---|---|---|---|---|---|
| mm/min, rev/min | Limitation of selected increment for velocity overlay | | | | RESET |
| A05, A10, A04 | | | | CTEQ | DOUBLE |
| - | - | 500.0 | - | - | 7/2 |

| 32084 | HANDWH_STOP_COND | | | | H1 |
|---|---|---|---|---|---|
| - | Control of VDI signals with respect to handwheel | | | | RESET |
| EXP, A10 | | | | CTEQ | DWORD |
| - | - | 0xFF | 0 | 0x7FF | 7/2 |

| 32090 | HANDWH_VELO_OVERLAY_FACTOR | | | | H1 |
|---|---|---|---|---|---|
| - | Ratio of JOG velocity to handwheel velocity (DRF) | | | | RESET |
| A10, A04 | | | | CTEQ | DOUBLE |
| - | - | 0.5 | - | - | 7/2 |

| 32100 | AX_MOTION_DIR | | | | G2 |
|---|---|---|---|---|---|
| - | Traversing direction (not control direction) | | | | POWER ON |
| A07, A03, A11 | | | | - | DWORD |
| - | - | 1 | -1 | 1 | 7/2 |

| 32110 | ENC_FEEDBACK_POL | | | | G2 |
|---|---|---|---|---|---|
| - | Sign actual value (control direction) | | | | POWER ON |
| A07, A02, A11 | | | | - | DWORD |
| - | 2 | 1, 1 | -1 | 1 | 7/2 |

| 32200 | POSCTRL_GAIN | | | | G2 |
|---|---|---|---|---|---|
| 1000/min | Servo gain factor | | | | NEW CONF |
| A07, A11 | | | | CTEQ | DOUBLE |
| - | 6 | 16.66666667,<br>16.66666667,<br>16.66666667,<br>16.66666667,<br>16.66666667... | 0 | 2000. | 7/2 |

| 32210 | POSCTRL_INTEGR_TIME | | | | G2 |
|---|---|---|---|---|---|
| s | Position contr. integral action time | | | | NEW CONF |
| A07 | | | | - | DOUBLE |
| - | - | 1.0 | 0 | 10000.0 | 7/2 |

© Siemens AG 2004 All Rights Reserved

| 32220 | POSCTRL_INTEGR_ENABLE | | | | G2 |
|---|---|---|---|---|---|
| - | Enable integral comp. position controller | | | | POWER ON |
| A07 | | | | - | BOOLEAN |
| - | - | FALSE | - | - | 7/2 |

| 32230 | POSCTRL_CONFIG | | | | - |
|---|---|---|---|---|---|
| - | Configuration of the position controller structure | | | | POWER ON |
| A07 | | | | - | BYTE |
| - | - | 0 | 0 | 17 | 7/2 |

| 32250 | RATED_OUTVAL | | | | G2 |
|---|---|---|---|---|---|
| % | Rated output voltage | | | | NEW CONF |
| A01, A11 | | | | CTEQ | DOUBLE |
| - | 1 | 80.0 | - | - | 7/2 |
| 840di-basic | - | 0.0 | - | - | -/- |
| 840di-universal | - | 0.0 | - | - | -/- |
| 840di-plus | - | 0.0 | - | - | -/- |

| 32260 | RATED_VELO | | | | G2 |
|---|---|---|---|---|---|
| rev/min | Rated motor speed | | | | NEW CONF |
| A01, A11 | | | | CTEQ | DOUBLE |
| - | 1 | 3000.0 | - | - | 7/2 |

| 32300 | MAX_AX_ACCEL | | | | B2 |
|---|---|---|---|---|---|
| m/s², rev/s² | Axis acceleration | | | | NEW CONF |
| A11, A04 | | | | CTEQ | DOUBLE |
| - | 5 | 1.0, 1.0, 1.0, 1.0, 1.0 | 1.0e-3 | - | 7/2 |

| 32310 | MAX_ACCEL_OVL_FACTOR | | | | B1 |
|---|---|---|---|---|---|
| - | Overload factor for axial velocity steps | | | | NEW CONF |
| A04 | | | | CTEQ | DOUBLE |
| - | 5 | 1.2, 1.2, 1.2, 1.2, 1.2 | - | - | 3/3 |

| 32400 | AX_JERK_ENABLE | | | | B2 |
|---|---|---|---|---|---|
| - | Axial jerk limitation | | | | NEW CONF |
| A07, A04 | | | | CTEQ | BOOLEAN |
| - | - | FALSE | - | - | 7/2 |

© Siemens AG 2004 All Rights Reserved

| 32402 | AX_JERK_MODE | | | | B2 |
|---|---|---|---|---|---|
| - | Axial jerk limitation filter type | | | | POWER ON |
| A07, A04 | | | | CTEQ | BYTE |
| - | - | 1 | 1 | 3 | 7/2 |

| 32410 | AX_JERK_TIME | | | | B2 |
|---|---|---|---|---|---|
| s | Time constant for axial jerk filter | | | | NEW CONF |
| A07, A04 | | | | - | DOUBLE |
| - | - | 0.001 | - | - | 7/2 |

| 32412 | AX_JERK_FREQ | | | | P6 |
|---|---|---|---|---|---|
| - | Blocking frequency of axial jerk filter | | | | NEW CONF |
| A07, A04 | | | | - | DOUBLE |
| - | - | 10.0 | - | - | 7/2 |

| 32414 | AX_JERK_DAMP | | | | P6 |
|---|---|---|---|---|---|
| - | Damping of axial jerk filter | | | | NEW CONF |
| A07, A04 | | | | - | DOUBLE |
| - | - | 0.0 | - | - | 7/2 |

| 32420 | JOG_AND_POS_JERK_ENABLE | | | | B2 |
|---|---|---|---|---|---|
| - | Default setting of axis jerk limitation | | | | RESET |
| A04 | | | | CTEQ | BOOLEAN |
| - | - | FALSE | - | - | 7/2 |

| 32430 | JOG_AND_POS_MAX_JERK | | | | B2 |
|---|---|---|---|---|---|
| m/s³, degrees/s³ | Axial jerk | | | | RESET |
| A04 | | | | CTEQ | DOUBLE |
| - | - | 1000.0 | 1.e-9 | - | 7/2 |

| 32431 | MAX_AX_JERK | | | | B1 |
|---|---|---|---|---|---|
| m/s³, degrees/s³ | Maximum axial jerk for path movement | | | | NEW CONF |
| A04 | | | | - | DOUBLE |
| - | 5 | 1.e6, 1.e6, 1.e6, 1.e6, 1.e6 | 1.e-9 | - | 3/3 |

| 32432 | PATH_TRANS_JERK_LIM | | | | B1 |
|---|---|---|---|---|---|
| m/s³, degrees/s³ | Max. axial jerk of a geo axis at block limit | | | | NEW CONF |
| A04 | | | | CTEQ | DOUBLE |
| - | 5 | 1.e6, 1.e6, 1.e6, 1.e6, 1.e6 | - | - | 3/3 |

© Siemens AG 2004 All Rights Reserved

| 32433 | SOFT_ACCEL_FACTOR | | | | B1 |
|---|---|---|---|---|---|
| - | Scaling of acceleration limitation with SOFT | | | | NEW CONF |
| A04 | | | | - | DOUBLE |
| - | 5 | 1., 1., 1., 1., 1. | 1e-9 | - | 3/3 |

| 32434 | G00_ACCEL_FACTOR | | | | B1 |
|---|---|---|---|---|---|
| - | Scaling of acceleration limitation with G00. | | | | NEW CONF |
| A04 | | | | - | DOUBLE |
| - | - | 1. | 1e-9 | - | 3/3 |

| 32435 | G00_JERK_FACTOR | | | | B1 |
|---|---|---|---|---|---|
| - | Scaling of jerk limitation with G00. | | | | NEW CONF |
| A04 | | | | - | DOUBLE |
| - | - | 1. | 1e-9 | - | 3/3 |

| 32440 | LOOKAH_FREQUENCY | | | | B1 |
|---|---|---|---|---|---|
| - | Smoothing frequency for Look Ahead | | | | NEW CONF |
| EXP, A04 | | | | - | DOUBLE |
| - | - | 10. | - | - | 7/2 |

| 32450 | BACKLASH | | | | K3 |
|---|---|---|---|---|---|
| mm, degrees | Backlash | | | | NEW CONF |
| A09 | | | | - | DOUBLE |
| - | 2 | 0.0, 0.0 | - | - | 7/2 |

| 32452 | BACKLASH_FACTOR | | | | K3 |
|---|---|---|---|---|---|
| - | Backlash evaluation factor | | | | NEW CONF |
| A09 | | | | - | DOUBLE |
| - | 6 | 1.0, 1.0, 1.0, 1.0, 1.0, 1.0 | 0.01 | 100.0 | 7/2 |

| 32460 | TORQUE_OFFSET | | | | K3 |
|---|---|---|---|---|---|
| % | Additional torque for electronic weight compensation | | | | NEW CONF |
| A09 | | | | - | DOUBLE |
| - | 1 | 0.0 | -100.0 | 100.0 | 7/2 |

| 32490 | FRICT_COMP_MODE | | | | K3 |
|---|---|---|---|---|---|
| - | Type of friction compensation | | | | POWER ON |
| A09 | | | | - | BYTE |
| - | 1 | 1 | 0 | 2 | 7/2 |

© Siemens AG 2004 All Rights Reserved

| | | | | | |
|---|---|---|---|---|---|
| **32500** | **FRICT_COMP_ENABLE** | | | | K3 |
| - | Friction compensation active | | | | NEW CONF |
| A09 | | | | - | BOOLEAN |
| - | - | FALSE | - | - | 7/2 |

| | | | | | |
|---|---|---|---|---|---|
| **32510** | **FRICT_COMP_ADAPT_ENABLE** | | | | K3 |
| - | Adaptation friction compensation active | | | | NEW CONF |
| EXP, A09 | | | | - | BOOLEAN |
| - | 1 | FALSE | - | - | 7/2 |

| | | | | | |
|---|---|---|---|---|---|
| **32520** | **FRICT_COMP_CONST_MAX** | | | | K3 |
| mm/min, rev/min | Maximum friction compensation value | | | | NEW CONF |
| EXP, A09 | | | | - | DOUBLE |
| - | 1 | 0.0 | - | - | 7/2 |

| | | | | | |
|---|---|---|---|---|---|
| **32530** | **FRICT_COMP_CONST_MIN** | | | | K3 |
| mm/min, rev/min | Minimum friction compensation value | | | | NEW CONF |
| EXP, A09 | | | | - | DOUBLE |
| - | 1 | 0.0 | - | - | 7/2 |

| | | | | | |
|---|---|---|---|---|---|
| **32540** | **FRICT_COMP_TIME** | | | | K3 |
| s | Friction compensation time constant | | | | NEW CONF |
| EXP, A09 | | | | - | DOUBLE |
| - | 1 | 0.015 | - | - | 7/2 |

| | | | | | |
|---|---|---|---|---|---|
| **32550** | **FRICT_COMP_ACCEL1** | | | | K3 |
| m/s², rev/s² | Adaptation acceleration value 1 | | | | NEW CONF |
| EXP, A09 | | | | - | DOUBLE |
| - | 1 | 0.0 | - | - | 7/2 |

| | | | | | |
|---|---|---|---|---|---|
| **32560** | **FRICT_COMP_ACCEL2** | | | | K3 |
| m/s², rev/s² | Adaptation acceleration value 2 | | | | NEW CONF |
| EXP, A09 | | | | - | DOUBLE |
| - | 1 | 0.0 | - | - | 7/2 |

| | | | | | |
|---|---|---|---|---|---|
| **32570** | **FRICT_COMP_ACCEL3** | | | | K3 |
| m/s², rev/s² | Adaptation acceleration value 3 | | | | NEW CONF |
| EXP, A09 | | | | - | DOUBLE |
| - | 1 | 0.0 | - | - | 7/2 |

© Siemens AG 2004 All Rights Reserved

| 32580 | FRICT_COMP_INC_FACTOR | | | | K3 |
|---|---|---|---|---|---|
| % | Weighting factor friction comp. value w/ short trav. movem. | | | | NEW CONF |
| A09 | | | | - | DOUBLE |
| - | 1 | 0.0 | 0 | 100.0 | 7/2 |

| 32610 | VELO_FFW_WEIGHT | | | | K3 |
|---|---|---|---|---|---|
| - | Feedforward factor for speed feedforward control | | | | NEW CONF |
| A07, A09 | | | | - | DOUBLE |
| - | 6 | 1.0, 1.0, 1.0, 1.0, 1.0, 1.0 | - | - | 7/2 |

| 32620 | FFW_MODE | | | | K3 |
|---|---|---|---|---|---|
| - | Feedforward control type | | | | RESET |
| A07, A09 | | | | - | BYTE |
| - | - | 1 | 0 | 4 | 7/2 |

| 32630 | FFW_ACTIVATION_MODE | | | | K3 |
|---|---|---|---|---|---|
| - | Activate feedforward control from program | | | | RESET |
| A07, A09 | | | | CTEQ | BYTE |
| - | - | 1 | - | - | 7/2 |

| 32640 | STIFFNESS_CONTROL_ENABLE | | | | K3,FBA |
|---|---|---|---|---|---|
| - | Dynamic stiffness control | | | | NEW CONF |
| A01, A07 | | | | CTEQ | BOOLEAN |
| - | 1 | FALSE | - | - | 7/2 |

| 32642 | STIFFNESS_CONTROL_CONFIG | | | | K3,FBA |
|---|---|---|---|---|---|
| - | Dynamic stiffness control configuration | | | | POWER ON |
| A01, A07 | | | | CTEQ | BYTE |
| - | 1 | 0 | 0 | 1 | 7/2 |

| 32644 | STIFFNESS_DELAY_TIME | | | | K3,FBA |
|---|---|---|---|---|---|
| s | Dynamic Stiffness Control: Delay | | | | POWER ON |
| A01, A07 | | | | CTEQ | DOUBLE |
| - | 1 | 0.0 | -0.02 | 0.02 | 7/2 |

| 32650 | AX_INERTIA | | | | K3 |
|---|---|---|---|---|---|
| kgm² | Moment of inertia for torque feedforward control | | | | NEW CONF |
| EXP, A07, A09 | | | | - | DOUBLE |
| - | - | 0.0 | - | - | 7/2 |

© Siemens AG 2004 All Rights Reserved

| 32652 | AX_MASS | | | | K3 |
|---|---|---|---|---|---|
| kg | Axis mass for torque feedforward control | | | | NEW CONF |
| EXP, A07, A09 | | | | - | DOUBLE |
| - | - | 0.0 | - | - | 7/2 |

| 32700 | ENC_COMP_ENABLE | | | | K3 |
|---|---|---|---|---|---|
| - | Interpolatory compensation | | | | NEW CONF |
| A09 | | | | - | BOOLEAN |
| - | 2 | FALSE, FALSE | - | - | 7/2 |

| 32710 | CEC_ENABLE | | | | K3 |
|---|---|---|---|---|---|
| - | Enable of sag compensation | | | | NEW CONF |
| A09 | | | | - | BOOLEAN |
| - | - | FALSE | - | - | 7/2 |

| 32711 | CEC_SCALING_SYSTEM_METRIC | | | | K3 |
|---|---|---|---|---|---|
| - | Measuring system of sag compensation | | | | NEW CONF |
| A09 | | | | - | BOOLEAN |
| - | - | TRUE | - | - | 7/2 |

| 32720 | CEC_MAX_SUM | | | | K3 |
|---|---|---|---|---|---|
| mm, degrees | Maximum compensation value for sag compensation | | | | NEW CONF |
| A09 | | | | - | DOUBLE |
| - | - | 1.0 | 0 | 10.0 | 7/2 |

| 32730 | CEC_MAX_VELO | | | | K3 |
|---|---|---|---|---|---|
| % | Maximum change value with sag compensation with ref. to MD32000 | | | | NEW CONF |
| EXP, A09, A04 | | | | - | DOUBLE |
| - | - | 10.0 | 0 | 100.0 | 7/2 |

| 32750 | TEMP_COMP_TYPE | | | | K3,W1 |
|---|---|---|---|---|---|
| - | Temperature compensation type | | | | POWER ON |
| A09 | | | | CTEQ | BYTE |
| - | - | 0 | 0 | 7 | 7/2 |

| 32760 | COMP_ADD_VELO_FACTOR | | | | K3 |
|---|---|---|---|---|---|
| - | Excessive velocity due to compensation | | | | POWER ON |
| EXP, A09, A04 | | | | CTEQ | DOUBLE |
| - | - | 0.01 | 0. | 0.10 | 7/2 |

© Siemens AG 2004 All Rights Reserved

| 32800 | EQUIV_CURRCTRL_TIME | | | | K3 |
|---|---|---|---|---|---|
| s | Equiv. time const. current control loop for feedforward control | | | | NEW CONF |
| EXP, A07, A09 | | | | - | DOUBLE |
| - | 6 | 0.0005, 0.0005, 0.0005, 0.0005, 0.0005, 0.0005 | - | - | 7/2 |

| 32810 | EQUIV_SPEEDCTRL_TIME | | | | K3 |
|---|---|---|---|---|---|
| s | Equiv. time constant speed control loop for feedforward control | | | | NEW CONF |
| A07, A09 | | | | - | DOUBLE |
| - | 6 | 0.008, 0.008, 0.008, 0.008, 0.008, 0.008 | - | - | 7/2 |
| 810d | - | 0.0025, 0.0025, 0.0025, 0.0025... | - | - | -/- |
| 840di-basic | - | 0.004, 0.004, 0.004, 0.004, 0.004, 0.004... | - | - | -/- |
| 840di-universal | - | 0.004, 0.004, 0.004, 0.004, 0.004, 0.004... | - | - | -/- |
| 840di-plus | - | 0.004, 0.004, 0.004, 0.004, 0.004, 0.004... | - | - | -/- |

| 32900 | DYN_MATCH_ENABLE | | | | G2 |
|---|---|---|---|---|---|
| - | Dynamic response adaptation | | | | NEW CONF |
| A07 | | | | CTEQ | BOOLEAN |
| - | - | FALSE | - | - | 7/2 |

| 32910 | DYN_MATCH_TIME | | | | G2 |
|---|---|---|---|---|---|
| s | Time constant of dynamic response adaptation | | | | NEW CONF |
| A07 | | | | - | DOUBLE |
| - | 6 | 0.0, 0.0, 0.0, 0.0, 0.0, 0.0 | - | - | 7/2 |

| 32920 | AC_FILTER_TIME | | | | S5,FBSY |
|---|---|---|---|---|---|
| s | Smoothing filter time constant for adaptive control | | | | POWER ON |
| A10 | | | | - | DOUBLE |
| - | - | 0.0 | - | - | 7/2 |

| 32930 | POSCTRL_OUT_FILTER_ENABLE | | | | G2 |
|---|---|---|---|---|---|
| - | Activation of low-pass filter at position controller output | | | | NEW CONF |
| A07 | | | | CTEQ | BOOLEAN |
| - | - | FALSE | - | - | 7/2 |

© Siemens AG 2004 All Rights Reserved

| 32940 | POSCTRL_OUT_FILTER_TIME | | | | G2 |
|---|---|---|---|---|---|
| s | Time constant of low-pass filter at position controller output | | | | NEW CONF |
| A07 | | | | - | DOUBLE |
| - | - | 0.0 | - | - | 7/2 |

| 32950 | POSCTRL_DAMPING | | | | G2 |
|---|---|---|---|---|---|
| % | Damping of servo loop | | | | NEW CONF |
| EXP, A07 | | | | - | DOUBLE |
| - | - | 0.0 | - | - | 7/2 |

| 32990 | POSCTRL_DESVAL_DELAY_INFO | | | | B3 |
|---|---|---|---|---|---|
| s | Actual setpoint position delay | | | | NEW CONF |
| EXP, A01, A07 | | | | READ | DOUBLE |
| - | 3 | 0.0, 0.0, 0.0 | - | - | 7/0 |

| 33000 | FIPO_TYPE | | | | G2 |
|---|---|---|---|---|---|
| - | Fine interpolator type (1: differential FIPO, 2: cubic FIPO) | | | | POWER ON |
| EXP, A07 | | | | CTEQ | BYTE |
| - | - | 2 | 1 | 3 | 7/2 |

| 33050 | LUBRICATION_DIST | | | | A2 |
|---|---|---|---|---|---|
| mm, degrees | Traversing path for lubrication from PLC | | | | NEW CONF |
| A03, A10 | | | | - | DOUBLE |
| - | - | 1.0e8 | - | - | 7/2 |

| 33060 | MAINTENANCE_DATA | | | | ePS |
|---|---|---|---|---|---|
| - | Configuration of maintenance data recording | | | | RESET |
| A10 | | | | - | DWORD |
| - | - | 1 | - | - | 7/2 |

| 33100 | COMPRESS_POS_TOL | | | | K1,PGA |
|---|---|---|---|---|---|
| mm, degrees | Maximum deviation during compression | | | | NEW CONF |
| A10 | | | | CTEQ | DOUBLE |
| - | - | 0.1 | 1.e-9 | - | 7/7 |

© Siemens AG 2004 All Rights Reserved

## 2.7.4 Reference point approach

| | | | | | |
|---|---|---|---|---|---|
| **34000** | **REFP_CAM_IS_ACTIVE** | | | | R1 |
| - | Axis with reference point cam | | | | RESET |
| A03, A11 | | | | - | BOOLEAN |
| - | - | TRUE | - | - | 7/2 |

| | | | | | |
|---|---|---|---|---|---|
| **34010** | **REFP_CAM_DIR_IS_MINUS** | | | | R1 |
| - | Approach reference point in minus direction | | | | RESET |
| A03, A11 | | | | - | BOOLEAN |
| - | - | FALSE | - | - | 7/2 |

| | | | | | |
|---|---|---|---|---|---|
| **34020** | **REFP_VELO_SEARCH_CAM** | | | | R1 |
| mm/min, rev/min | Reference point approach velocity | | | | RESET |
| A03, A11, A04 | | | | - | DOUBLE |
| - | - | 5000.00 | - | - | 7/2 |

| | | | | | |
|---|---|---|---|---|---|
| **34030** | **REFP_MAX_CAM_DIST** | | | | R1 |
| mm, degrees | Maximum distance to reference cam | | | | RESET |
| A03, A11 | | | | - | DOUBLE |
| - | - | 10000.0 | - | - | 7/2 |

| | | | | | |
|---|---|---|---|---|---|
| **34040** | **REFP_VELO_SEARCH_MARKER** | | | | R1 |
| mm/min, rev/min | Creep velocity | | | | RESET |
| A03, A11, A04 | | | | - | DOUBLE |
| - | 2 | 300.00, 300.00 | - | - | 7/2 |

| | | | | | |
|---|---|---|---|---|---|
| **34050** | **REFP_SEARCH_MARKER_REVERSE** | | | | R1 |
| - | Direction reversal to reference cams | | | | RESET |
| A03, A11 | | | | - | BOOLEAN |
| - | 2 | FALSE, FALSE | - | - | 7/2 |

| | | | | | |
|---|---|---|---|---|---|
| **34060** | **REFP_MAX_MARKER_DIST** | | | | R1 |
| mm, degrees | Maximum distance to reference mark. | | | | RESET |
| A03, A11 | | | | - | DOUBLE |
| - | 2 | 20.0, 20.0 | - | - | 7/2 |

© Siemens AG 2004 All Rights Reserved

| 34070 | REFP_VELO_POS | | | | R1 |
|---|---|---|---|---|---|
| mm/min, rev/min | Reference point positioning velocity | | | | RESET |
| A03, A11, A04 | | | | - | DOUBLE |
| - | - | 10000.00 | - | - | 7/2 |

| 34080 | REFP_MOVE_DIST | | | | R1 |
|---|---|---|---|---|---|
| mm, degrees | Reference point distance | | | | NEW CONF |
| A03, A11 | | | | - | DOUBLE |
| - | 2 | -2.0, -2.0 | - | - | 7/2 |

| 34090 | REFP_MOVE_DIST_CORR | | | | R1 |
|---|---|---|---|---|---|
| mm, degrees | Reference point offset/absolute distance-coded offset | | | | NEW CONF |
| A03, A02, A08, A11 | | | | - | DOUBLE |
| - | 2 | 0.0, 0.0 | - | - | 7/2 |

| 34092 | REFP_CAM_SHIFT | | | | R1 |
|---|---|---|---|---|---|
| mm, degrees | Electr. cam offset of incremental measuring systems | | | | RESET |
| A03, A11 | | | | - | DOUBLE |
| - | 2 | 0.0, 0.0 | - | - | 7/2 |

| 34093 | REFP_CAM_MARKER_DIST | | | | R1 |
|---|---|---|---|---|---|
| mm, degrees | Reference cam/marker distance | | | | POWER ON |
| A03, A11 | | | | READ | DOUBLE |
| - | 2 | 0.0, 0.0 | - | - | 7/2 |

| 34100 | REFP_SET_POS | | | | R1 |
|---|---|---|---|---|---|
| mm, degrees | Reference point value/target point for distance-coded system | | | | RESET |
| A03, A11 | | | | - | DOUBLE |
| - | 4 | 0., 0., 0., 0. | -45000000 | 45000000 | 7/2 |

| 34102 | REFP_SYNC_ENCS | | | | R1 |
|---|---|---|---|---|---|
| - | Calibration of measuring systems | | | | RESET |
| A03, A02 | | | | - | BYTE |
| - | - | 0 | 0 | 1 | 7/2 |

| 34104 | REFP_PERMITTED_IN_FOLLOWUP | | | | R1 |
|---|---|---|---|---|---|
| - | Enable referencing in follow-up mode | | | | RESET |
| A03, A02 | | | | - | BOOLEAN |
| - | - | FALSE | - | - | 7/2 |

© Siemens AG 2004 All Rights Reserved

| 34110 | REFP_CYCLE_NR | | | | R1 |
|---|---|---|---|---|---|
| - | Sequence of axes in channel-specific referencing | | | | POWER ON |
| A03 | | | | - | DWORD |
| - | - | 1,2,3,4,5,6,7,8,9,10,11, 12,13,14,15,16,17,18... | -1 | 31 | 7/2 |

| 34120 | REFP_BERO_LOW_ACTIVE | | | | M5 |
|---|---|---|---|---|---|
| - | BERO polarity change | | | | POWER ON |
| A02 | | | | - | BOOLEAN |
| - | - | FALSE | - | - | 7/2 |

| 34200 | ENC_REFP_MODE | | | | R1 |
|---|---|---|---|---|---|
| - | Referencing mode | | | | POWER ON |
| A03, A02 | | | | - | BYTE |
| - | 2 | 1, 1 | 0 | 8 | 7/2 |

| 34210 | ENC_REFP_STATE | | | | R1 |
|---|---|---|---|---|---|
| - | Status absolute encoder | | | | IMMEDIATELY |
| A07, A03, A02 | | | | - | BYTE |
| - | 2 | 0, 0 | 0 | 2 | 7/4 |

| 34220 | ENC_ABS_TURNS_MODULO | | | | R2 |
|---|---|---|---|---|---|
| - | Absolute value encoder range for rotary encoders | | | | POWER ON |
| A03, A02 | | | | - | DWORD |
| - | 2 | 4096, 4096 | 1 | 100000 | 7/2 |

| 34230 | ENC_SERIAL_NUMBER | | | | R1 |
|---|---|---|---|---|---|
| - | Encoder serial number | | | | POWER ON |
| A02 | | | | - | DWORD |
| - | 2 | 0, 0 | - | - | 7/2 |

| 34232 | EVERY_ENC_SERIAL_NUMBER | | | | R1 |
|---|---|---|---|---|---|
| - | Range of encoder serial number | | | | POWER ON |
| A02 | | | | - | BOOLEAN |
| - | 2 | TRUE, TRUE | - | - | 7/2 |

| 34300 | ENC_REFP_MARKER_DIST | | | | R1 |
|---|---|---|---|---|---|
| mm, degrees | Reference mark distance for distance-coded scales | | | | POWER ON |
| A03, A02 | | | | - | DOUBLE |
| - | 2 | 10.0, 10.0 | - | - | 7/2 |

© Siemens AG 2004 All Rights Reserved

| | | | | | |
|---|---|---|---|---|---|
| **34310** | **ENC_MARKER_INC** | | | | R1 |
| mm, degrees | Interval between reference marks for distance-coded scales | | | | RESET |
| A03, A02 | | | | - | DOUBLE |
| - | 2 | 0.02, 0.02 | - | - | 7/2 |

| | | | | | |
|---|---|---|---|---|---|
| **34320** | **ENC_INVERS** | | | | G2,R1 |
| - | Linear measurement system in an opposite direction | | | | RESET |
| A03, A02 | | | | - | BOOLEAN |
| - | 2 | FALSE, FALSE | - | - | 7/2 |

| | | | | | |
|---|---|---|---|---|---|
| **34330** | **REFP_STOP_AT_ABS_MARKER** | | | | R1 |
| - | Distance-coded linear measurement system without target point | | | | RESET |
| A03 | | | | - | BOOLEAN |
| - | 2 | TRUE, TRUE | - | - | 7/2 |

| | | | | | |
|---|---|---|---|---|---|
| **34990** | **ENC_ACTVAL_SMOOTH_TIME** | | | | V1 |
| s | Smoothing time constant for actual values. | | | | RESET |
| A02 | | | | - | DOUBLE |
| - | 2 | 0.0, 0.0 | 0.0 | 0.5 | 7/2 |

## 2.7.5 Spindles

| | | | | | |
|---|---|---|---|---|---|
| **35000** | **SPIND_ASSIGN_TO_MACHAX** | | | | S1 |
| - | Assignment of spindle to machine axis | | | | POWER ON |
| A01, A06, A11 | | | | - | BYTE |
| - | - | 0 | 0 | 20 | 7/2 |

| | | | | | |
|---|---|---|---|---|---|
| **35010** | **GEAR_STEP_CHANGE_ENABLE** | | | | S1 |
| - | Gear change possible. Spindle has several gear stages | | | | RESET |
| A06, A11 | | | | CTEQ | DWORD |
| - | - | 0 | 0 | 12 | 7/2 |

| | | | | | |
|---|---|---|---|---|---|
| **35012** | **GEAR_STEP_CHANGE_POSITION** | | | | S1 |
| mm, degrees | Gear step change position | | | | NEW CONF |
| A06, A11 | | | | CTEQ | DOUBLE |
| - | 6 | 0.0, 0.0, 0.0, 0.0, 0.0, 0.0 | - | - | 7/2 |

© Siemens AG 2004 All Rights Reserved

| | | | | | |
|---|---|---|---|---|---|
| **35014** | **GEAR_STEP_USED_IN_AXISMODE** | | | | - |
| - | Gear step used in axismode by M70 | | | | NEW CONF |
| A01, A06, A11 | | | | CTEQ | DWORD |
| - | - | 0 | 0 | 5 | 7/2 |

| | | | | | |
|---|---|---|---|---|---|
| **35020** | **SPIND_DEFAULT_MODE** | | | | S1 |
| - | Initial spindle setting | | | | RESET |
| A06, A10 | | | | CTEQ | BYTE |
| - | - | 0 | 0 | 3 | 7/2 |

| | | | | | |
|---|---|---|---|---|---|
| **35030** | **SPIND_DEFAULT_ACT_MASK** | | | | S1 |
| - | Time at which initial spindle setting is effective | | | | RESET |
| A06, A10 | | | | CTEQ | BYTE |
| - | - | 0x00 | 0 | 0x03 | 7/2 |

| | | | | | |
|---|---|---|---|---|---|
| **35032** | **SPIND_FUNC_RESET_MODE** | | | | W4 |
| - | Reset response of single spindle functions | | | | POWER ON |
| A06, A10 | | | | CTEQ | DWORD |
| - | - | 0x00 | 0 | 0x01 | 7/2 |

| | | | | | |
|---|---|---|---|---|---|
| **35035** | **SPIND_FUNCTION_MASK** | | | | S1 |
| - | Spindle functions | | | | RESET |
| A06, A10 | | | | CTEQ | DWORD |
| - | - | 0x110 | 0 | 0x1137 | 7/2 |

| | | | | | |
|---|---|---|---|---|---|
| **35040** | **SPIND_ACTIVE_AFTER_RESET** | | | | S1 |
| - | Own spindle RESET | | | | POWER ON |
| A06, A10 | | | | CTEQ | BYTE |
| - | - | 0 | 0 | 2 | 7/2 |

| | | | | | |
|---|---|---|---|---|---|
| **35100** | **SPIND_VELO_LIMIT** | | | | S1 |
| rev/min | Maximum spindle speed | | | | POWER ON |
| A06, A11, A04 | | | | CTEQ | DOUBLE |
| - | - | 10000.0 | 1.0e-3 | - | 7/2 |

| | | | | | |
|---|---|---|---|---|---|
| **35110** | **GEAR_STEP_MAX_VELO** | | | | S1 |
| rev/min | Maximum speed for gear change | | | | NEW CONF |
| A06, A11, A04 | | | | CTEQ | DOUBLE |
| - | 6 | 500., 500., 1000., 2000., 4000., 8000. | - | - | 7/2 |

© Siemens AG 2004 All Rights Reserved

| 35120 | GEAR_STEP_MIN_VELO | | | | S1 |
|---|---|---|---|---|---|
| rev/min | Minimum speed for gear change | | | | NEW CONF |
| A06, A11, A04 | | | | CTEQ | DOUBLE |
| - | 6 | 50., 50., 400., 800., 1500., 3000. | - | - | 7/2 |

| 35130 | GEAR_STEP_MAX_VELO_LIMIT | | | | S1 |
|---|---|---|---|---|---|
| rev/min | Maximum speed of gear stage | | | | NEW CONF |
| A06, A11, A04 | | | | CTEQ | DOUBLE |
| - | 6 | 500., 500., 1000., 2000., 4000., 8000. | 1.0e-3 | - | 7/2 |

| 35140 | GEAR_STEP_MIN_VELO_LIMIT | | | | S1 |
|---|---|---|---|---|---|
| rev/min | Minimum speed of gear stage | | | | NEW CONF |
| A06, A11, A04 | | | | CTEQ | DOUBLE |
| - | 6 | 5., 5., 10., 20., 40., 80. | - | - | 7/2 |

| 35150 | SPIND_DES_VELO_TOL | | | | S1 |
|---|---|---|---|---|---|
| - | Spindle speed tolerance | | | | RESET |
| A03, A05, A06, A10, A04 | | | | - | DOUBLE |
| - | - | 0.1 | 0.0 | 1.0 | 7/2 |

| 35160 | SPIND_EXTERN_VELO_LIMIT | | | | S1 |
|---|---|---|---|---|---|
| rev/min | Spindle speed limitation from PLC | | | | NEW CONF |
| A06, A04 | | | | CTEQ | DOUBLE |
| - | - | 1000.0 | 1.0e-3 | - | 7/2 |

| 35200 | GEAR_STEP_SPEEDCTRL_ACCEL | | | | S1 |
|---|---|---|---|---|---|
| rev/s² | Acceleration in speed control mode | | | | NEW CONF |
| A06, A11, A04 | | | | CTEQ | DOUBLE |
| - | 6 | 30.0, 30.0, 25.0, 20.0, 15.0, 10.0 | 1.0e-3 | - | 7/2 |

| 35210 | GEAR_STEP_POSCTRL_ACCEL | | | | S1 |
|---|---|---|---|---|---|
| rev/s² | Acceleration in position control mode | | | | NEW CONF |
| A06, A11, A04 | | | | CTEQ | DOUBLE |
| - | 6 | 30.0, 30.0, 25.0, 20.0, 15.0, 10.0 | 1.0e-3 | - | 7/2 |

© Siemens AG 2004 All Rights Reserved

| 35220 | ACCEL_REDUCTION_SPEED_POINT | | | | S1,S6,B2 |
|---|---|---|---|---|---|
| - | Speed for reduced acceleration | | | | RESET |
| A06, A04 | | | | - | DOUBLE |
| - | - | 1.0 | 0.0 | 1.0 | 7/2 |

| 35230 | ACCEL_REDUCTION_FACTOR | | | | S1,S6,B2 |
|---|---|---|---|---|---|
| - | Reduced acceleration | | | | RESET |
| A06, A04 | | | | CTEQ | DOUBLE |
| - | - | 0.0 | 0.0 | 0.95 | 7/2 |

| 35240 | ACCEL_TYPE_DRIVE | | | | S6 |
|---|---|---|---|---|---|
| - | Acceleration charakteristic DRIVE of axis ON/OFF | | | | RESET |
| A04 | | | | CTEQ | BOOLEAN |
| - | - | FALSE | - | - | 7/2 |

| 35242 | ACCEL_REDUCTION_TYPE | | | | S6 |
|---|---|---|---|---|---|
| - | Type of acceleration reduction | | | | RESET |
| A04 | | | | CTEQ | BYTE |
| - | - | 1 | 0 | 2 | 7/2 |

| 35300 | SPIND_POSCTRL_VELO | | | | S1 |
|---|---|---|---|---|---|
| rev/min | Position control switch-on speed | | | | NEW CONF |
| A06, A04 | | | | CTEQ | DOUBLE |
| - | - | 500.0 | - | - | 7/2 |

| 35310 | SPIND_POSIT_DELAY_TIME | | | | S1 |
|---|---|---|---|---|---|
| s | Positioning delay time | | | | NEW CONF |
| A06, A04 | | | | CTEQ | DOUBLE |
| - | 6 | 0.0, 0.05, 0.1, 0.2, 0.4, 0.8 | - | - | 7/2 |

| 35350 | SPIND_POSITIONING_DIR | | | | S1 |
|---|---|---|---|---|---|
| - | Direction of rotation when positioning | | | | RESET |
| A06 | | | | CTEQ | BYTE |
| - | - | 3 | 3 | 4 | 7/2 |

| 35400 | SPIND_OSCILL_DES_VELO | | | | S1 |
|---|---|---|---|---|---|
| rev/min | Oscillation speed | | | | NEW CONF |
| A06, A04 | | | | CTEQ | DOUBLE |
| - | - | 500.0 | - | - | 7/2 |

© Siemens AG 2004 All Rights Reserved

| 35410 | SPIND_OSCILL_ACCEL | | | | S1 |
|---|---|---|---|---|---|
| rev/s² | Acceleration during oscillation | | | | NEW CONF |
| A06, A04 | | | | CTEQ | DOUBLE |
| - | - | 16.0 | 1.0e-3 | - | 7/2 |

| 35430 | SPIND_OSCILL_START_DIR | | | | S1 |
|---|---|---|---|---|---|
| - | Starting direction during oscillation | | | | RESET |
| A06 | | | | CTEQ | BYTE |
| - | - | 0 | 0 | 4 | 7/2 |

| 35440 | SPIND_OSCILL_TIME_CW | | | | S1 |
|---|---|---|---|---|---|
| s | Oscillation time for M3 direction | | | | NEW CONF |
| A06 | | | | CTEQ | DOUBLE |
| - | - | 1.0 | - | - | 7/2 |

| 35450 | SPIND_OSCILL_TIME_CCW | | | | S1 |
|---|---|---|---|---|---|
| s | Oscillation time for M4 direction | | | | NEW CONF |
| A06 | | | | CTEQ | DOUBLE |
| - | - | 0.5 | - | - | 7/2 |

| 35500 | SPIND_ON_SPEED_AT_IPO_START | | | | S1 |
|---|---|---|---|---|---|
| - | Feedrate enable for spindle in the set range | | | | RESET |
| A03, A06, A10 | | | | CTEQ | BYTE |
| - | - | 1 | 0 | 2 | 7/2 |

| 35510 | SPIND_STOPPED_AT_IPO_START | | | | S1 |
|---|---|---|---|---|---|
| - | Feedrate enable for spindle stopped | | | | RESET |
| A03, A06, A10 | | | | CTEQ | BOOLEAN |
| - | - | FALSE | - | - | 7/2 |

| 35550 | DRILL_VELO_LIMIT | | | | - |
|---|---|---|---|---|---|
| rev/min | Max. speed of drill function | | | | NEW CONF |
| A06, A11, A04 | | | | CTEQ | DOUBLE |
| - | 6 | 10000., 10000., 10000., 10000., 10000., 10000. | 1 | - | 7/2 |

| 35590 | PARAMSET_CHANGE_ENABLE | | | | A2 |
|---|---|---|---|---|---|
| - | Parameter set can be changed | | | | POWER ON |
| EXP, A05 | | | | CTEQ | BYTE |
| - | - | 0 | 0 | 2 | 7/2 |

© Siemens AG 2004 All Rights Reserved

## 2.7.6 Monitoring functions

| | | | | | |
|---|---|---|---|---|---|
| **36000** | **STOP_LIMIT_COARSE** | | | | B1 |
| mm, degrees | Exact stop coarse | | | | NEW CONF |
| A05 | | | | - | DOUBLE |
| - | - | 0.04 | - | - | 7/2 |

| | | | | | |
|---|---|---|---|---|---|
| **36010** | **STOP_LIMIT_FINE** | | | | B1 |
| mm, degrees | Exact stop fine | | | | NEW CONF |
| A05 | | | | - | DOUBLE |
| - | - | 0.01 | - | - | 7/2 |

| | | | | | |
|---|---|---|---|---|---|
| **36012** | **STOP_LIMIT_FACTOR** | | | | B1 |
| - | Factor for exact stop coarse/fine and standstill | | | | NEW CONF |
| A05 | | | | - | DOUBLE |
| - | 6 | 1.0, 1.0, 1.0, 1.0, 1.0, 1.0 | 0.001 | 1000.0 | 7/2 |

| | | | | | |
|---|---|---|---|---|---|
| **36020** | **POSITIONING_TIME** | | | | B1,A3 |
| s | Delay time exact stop fine | | | | NEW CONF |
| A05 | | | | - | DOUBLE |
| - | - | 1.0 | - | - | 7/2 |

| | | | | | |
|---|---|---|---|---|---|
| **36030** | **STANDSTILL_POS_TOL** | | | | A3 |
| mm, degrees | Standstill tolerance | | | | NEW CONF |
| A05 | | | | - | DOUBLE |
| - | - | 0.2 | - | - | 7/2 |

| | | | | | |
|---|---|---|---|---|---|
| **36040** | **STANDSTILL_DELAY_TIME** | | | | A3 |
| s | Delay zero-speed control | | | | NEW CONF |
| A05 | | | | - | DOUBLE |
| - | - | 0.4 | - | - | 7/2 |

| | | | | | |
|---|---|---|---|---|---|
| **36042** | **FOC_STANDSTILL_DELAY_TIME** | | | | F1 |
| s | Delay time for standstill monit. w/ active torque or force lim. | | | | NEW CONF |
| A05 | | | | - | DOUBLE |
| - | - | 0.4 | - | - | 7/2 |

© Siemens AG 2004 All Rights Reserved

| 36050 | CLAMP_POS_TOL | | | | A3 |
|---|---|---|---|---|---|
| mm, degrees | Clamping tolerance | | | | NEW CONF |
| A05 | | | | - | DOUBLE |
| - | - | 0.5 | - | - | 7/2 |

| 36052 | STOP_ON_CLAMPING | | | | - |
|---|---|---|---|---|---|
| - | Special functions with clamping axis | | | | NEW CONF |
| A10 | | | | CTEQ | BYTE |
| - | - | 0 | 0 | 0x07 | 2/1 |

| 36060 | STANDSTILL_VELO_TOL | | | | A2 |
|---|---|---|---|---|---|
| mm/min, rev/min | Maximum velocity/speed 'axis/spindle stopped' | | | | NEW CONF |
| A05, A04 | | | | - | DOUBLE |
| - | - | 5.00 | - | - | 7/2 |

| 36100 | POS_LIMIT_MINUS | | | | A3 |
|---|---|---|---|---|---|
| mm, degrees | 1st software limit switch minus | | | | NEW CONF |
| A03, A05, A11 | | | | CTEQ | DOUBLE |
| - | - | -1.0e8 | - | - | 7/2 |

| 36110 | POS_LIMIT_PLUS | | | | A3 |
|---|---|---|---|---|---|
| mm, degrees | 1st software limit switch plus | | | | NEW CONF |
| A03, A05, A11 | | | | CTEQ | DOUBLE |
| - | - | 1.0e8 | - | - | 7/2 |

| 36120 | POS_LIMIT_MINUS2 | | | | A3 |
|---|---|---|---|---|---|
| mm, degrees | 2nd software limit switch minus | | | | NEW CONF |
| A03, A05 | | | | CTEQ | DOUBLE |
| - | - | -1.0e8 | - | - | 7/2 |

| 36130 | POS_LIMIT_PLUS2 | | | | A3 |
|---|---|---|---|---|---|
| mm, degrees | 2nd software limit switch plus | | | | NEW CONF |
| A03, A05 | | | | CTEQ | DOUBLE |
| - | - | 1.0e8 | - | - | 7/2 |

| 36200 | AX_VELO_LIMIT | | | | A3 |
|---|---|---|---|---|---|
| mm/min, rev/min | Threshold value for velocity monitoring | | | | NEW CONF |
| A05, A11, A04 | | | | CTEQ | DOUBLE |
| - | 6 | 11500., 11500., 11500., 11500., 11500., 11500. | - | - | 7/2 |

© Siemens AG 2004 All Rights Reserved

| 36210 | CTRLOUT_LIMIT | | | | G2 |
|---|---|---|---|---|---|
| % | Maximum speed setpoint | | | | NEW CONF |
| EXP, A05 | | | | CTEQ | DOUBLE |
| - | 1 | 110.0 | 0 | 200 | 7/2 |

| 36220 | CTRLOUT_LIMIT_TIME | | | | A3 |
|---|---|---|---|---|---|
| s | Delay time for speed setpoint monitoring | | | | NEW CONF |
| EXP, A05 | | | | - | DOUBLE |
| - | 1 | 0.0 | - | - | 7/2 |

| 36300 | ENC_FREQ_LIMIT | | | | A3 |
|---|---|---|---|---|---|
| - | Encoder limit frequency | | | | POWER ON |
| EXP, A02, A05, A06 | | | | - | DOUBLE |
| - | 2 | 3.0e5, 3.0e5 | - | - | 7/2 |

| 36302 | ENC_FREQ_LIMIT_LOW | | | | A3 |
|---|---|---|---|---|---|
| % | Encoder limit frequency at which encoder is switched on again. | | | | NEW CONF |
| EXP, A02, A05, A06 | | | | - | DOUBLE |
| - | 2 | 99.9, 99.9 | 0 | 100 | 7/2 |

| 36310 | ENC_ZERO_MONITORING | | | | A3 |
|---|---|---|---|---|---|
| - | Zero mark monitoring | | | | NEW CONF |
| EXP, A02, A05 | | | | - | DWORD |
| - | 2 | 0, 0 | - | - | 7/2 |

| 36400 | CONTOUR_TOL | | | | A3 |
|---|---|---|---|---|---|
| mm, degrees | Tolerance band for contour monitoring | | | | NEW CONF |
| A05, A11 | | | | - | DOUBLE |
| - | - | 1.0 | - | - | 7/2 |

| 36500 | ENC_CHANGE_TOL | | | | G2 |
|---|---|---|---|---|---|
| mm, degrees | Maximum tolerance for position actual value switchover | | | | NEW CONF |
| A02, A05 | | | | - | DOUBLE |
| - | - | 0.1 | - | - | 7/2 |

| 36510 | ENC_DIFF_TOL | | | | G2 |
|---|---|---|---|---|---|
| mm, degrees | Tolerance of measuring system synchronization | | | | NEW CONF |
| A02, A05 | | | | - | DOUBLE |
| - | - | 0.0 | - | - | 7/2 |

© Siemens AG 2004 All Rights Reserved

| 36520 | DES_VELO_LIMIT | | | | DA |
|---|---|---|---|---|---|
| % | Threshold for setpoint velocity monitoring | | | | NEW CONF |
| A02, A05 | | | | - | DOUBLE |
| - | - | 125.0 | - | - | 7/2 |

| 36600 | BRAKE_MODE_CHOICE | | | | A3 |
|---|---|---|---|---|---|
| - | Deceleration response on hardware limit switch | | | | POWER ON |
| EXP, A05 | | | | CTEQ | BYTE |
| - | - | 1 | 0 | 1 | 7/2 |

| 36610 | AX_EMERGENCY_STOP_TIME | | | | A3 |
|---|---|---|---|---|---|
| s | Duration of the deceleration ramp for error states | | | | NEW CONF |
| A05 | | | | - | DOUBLE |
| - | - | 0.05 | - | - | 7/2 |

| 36620 | SERVO_DISABLE_DELAY_TIME | | | | A2 |
|---|---|---|---|---|---|
| s | Cutout delay servo enable | | | | NEW CONF |
| A05 | | | | - | DOUBLE |
| - | - | 0.1 | - | - | 7/2 |

| 36690 | AXIS_DIAGNOSIS | | | | - |
|---|---|---|---|---|---|
| - | Internal data for test purposes | | | | POWER ON |
| EXP, A08 | | | | NBUP | DWORD |
| - | - | 0 | - | - | 0/0 |

| 36700 | DRIFT_ENABLE | | | | K3 |
|---|---|---|---|---|---|
| - | Automatic drift compensation | | | | NEW CONF |
| EXP, A07, A09 | | | | - | BOOLEAN |
| - | - | FALSE | - | - | 1/1 |

| 36710 | DRIFT_LIMIT | | | | K3 |
|---|---|---|---|---|---|
| % | Drift limit value for automatic drift compensation | | | | NEW CONF |
| EXP, A07, A09 | | | | - | DOUBLE |
| - | 1 | 0.0 | 0 | 1.e9 | 1/1 |

| 36720 | DRIFT_VALUE | | | | K3 |
|---|---|---|---|---|---|
| % | Basic drift value | | | | NEW CONF |
| EXP, A07, A09 | | | | - | DOUBLE |
| - | 1 | 0.0 | - | - | 1/1 |

© Siemens AG 2004 All Rights Reserved

| 36730 | DRIVE_SIGNAL_TRACKING | | | | S5 |
|---|---|---|---|---|---|
| - | Acquisition of additional drive actual values | | | | POWER ON |
| A10 | | | | - | BYTE |
| - | - | 0 | 0 | 4 | 7/2 |

| 36750 | AA_OFF_MODE | | | | FBSY |
|---|---|---|---|---|---|
| - | Effect of value assignm. for axial overlay in synchr. actions | | | | POWER ON |
| A10 | | | | CTEQ | BYTE |
| - | - | 0 | 0 | 7 | 7/2 |

## 2.7.7 Safety Integrated

| 36901 | SAFE_FUNCTION_ENABLE | | | | FBSI |
|---|---|---|---|---|---|
| - | Enable safety functions | | | | POWER ON |
| A05 | | | | - | DWORD |
| - | - | 0 | 0 | 0xFFFB | 7/2 |
| 840di-basic | - | - | - | - | -1/- |
| 840di-universal | - | - | - | - | -1/- |
| 840di-plus | - | - | - | - | -1/- |

| 36902 | SAFE_IS_ROT_AX | | | | FBSI |
|---|---|---|---|---|---|
| - | Rotary axis | | | | POWER ON |
| A01, A05, A06 | | | | - | BOOLEAN |
| - | - | FALSE | - | - | 7/2 |
| 840di-basic | - | - | - | - | -1/- |
| 840di-universal | - | - | - | - | -1/- |
| 840di-plus | - | - | - | - | -1/- |

| 36905 | SAFE_MODULO_RANGE | | | | FBSI |
|---|---|---|---|---|---|
| degrees | Range of SI actual value (rev.) | | | | POWER ON |
| A02 | | | | - | DOUBLE |
| - | - | 0.0 | 0.0 | 737280.0 | 7/2 |
| 840di-basic | - | - | - | - | -1/- |
| 840di-universal | - | - | - | - | -1/- |
| 840di-plus | - | - | - | - | -1/- |

© Siemens AG 2004 All Rights Reserved

| **36910** | **SAFE_ENC_SEGMENT_NR** | | | | FBSI |
|---|---|---|---|---|---|
| - | Actual value assignment: type of drive | | | | POWER ON |
| EXP, A01, A02, A05 | | | | - | BYTE |
| - | - | 5 | 5 | 5 | 0/0 |
| 810d | - | - | - | - | -1/- |
| 840d-2a2c | - | 1 | 1 | 1 | -1/- |
| 840d-6a2c | - | - | - | - | -1/- |
| 840d-12a2c | - | 1 | 1 | 1 | -1/- |
| 840d-31a10c | - | 1 | 1 | 1 | -1/- |
| 840di-basic | - | - | - | - | -1/- |
| 840di-universal | - | - | - | - | -1/- |
| 840di-plus | - | - | - | - | -1/- |

| **36911** | **SAFE_ENC_MODULE_NR** | | | | FBSI |
|---|---|---|---|---|---|
| - | Actual value assignment: drive number/measurement circuit number | | | | POWER ON |
| A01, A02, A05 | | | | - | BYTE |
| - | - | 1,2,3,4,5,6,7,8,9,10,11, 12,13,14,15,16,17,18... | 1 | 31 | 7/2 |
| 840di-basic | - | - | - | - | -1/- |
| 840di-universal | - | - | - | - | -1/- |
| 840di-plus | - | - | - | - | -1/- |

| **36912** | **SAFE_ENC_INPUT_NR** | | | | FBSI |
|---|---|---|---|---|---|
| - | Actual value assignm.: Input on drive module/meas. circuit board | | | | POWER ON |
| A01, A02, A05 | | | | - | BYTE |
| - | - | 1 | 1 | 2 | 7/2 |
| 840di-basic | - | - | - | - | -1/- |
| 840di-universal | - | - | - | - | -1/- |
| 840di-plus | - | - | - | - | -1/- |

| **36915** | **SAFE_ENC_TYPE** | | | | FBSI |
|---|---|---|---|---|---|
| - | Encoder type | | | | POWER ON |
| A01, A02, A05 | | | | - | BYTE |
| - | - | 0 | 0 | 4 | 7/2 |
| 840di-basic | - | - | - | - | -1/- |
| 840di-universal | - | - | - | - | -1/- |
| 840di-plus | - | - | - | - | -1/- |

© Siemens AG 2004 All Rights Reserved

| 36916 | SAFE_ENC_IS_LINEAR | | | | FBSI |
|---|---|---|---|---|---|
| - | Linear scale | | | | POWER ON |
| A02, A05 | | | | - | BOOLEAN |
| - | - | FALSE | - | - | 7/2 |
| 840di-basic | - | - | - | - | -1/- |
| 840di-universal | - | - | - | - | -1/- |
| 840di-plus | - | - | - | - | -1/- |

| 36917 | SAFE_ENC_GRID_POINT_DIST | | | | FBSI |
|---|---|---|---|---|---|
| mm | Scale division for linear scale | | | | POWER ON |
| A02, A05 | | | | - | DOUBLE |
| - | - | 0.01 | 0.00001 | 8 | 7/2 |
| 840di-basic | - | - | - | - | -1/- |
| 840di-universal | - | - | - | - | -1/- |
| 840di-plus | - | - | - | - | -1/- |

| 36918 | SAFE_ENC_RESOL | | | | FBSI |
|---|---|---|---|---|---|
| - | Encoder markings per revolution | | | | POWER ON |
| A02, A05 | | | | - | DWORD |
| - | - | 2048 | 1 | 100000 | 7/2 |
| 840di-basic | - | - | - | - | -1/- |
| 840di-universal | - | - | - | - | -1/- |
| 840di-plus | - | - | - | - | -1/- |

| 36920 | SAFE_ENC_GEAR_PITCH | | | | FBSI |
|---|---|---|---|---|---|
| mm | Lead screw pitch | | | | POWER ON |
| A02, A05 | | | | - | DOUBLE |
| - | - | 10.0 | 0.1 | 10000. | 7/2 |
| 840di-basic | - | - | - | - | -1/- |
| 840di-universal | - | - | - | - | -1/- |
| 840di-plus | - | - | - | - | -1/- |

| 36921 | SAFE_ENC_GEAR_DENOM | | | | FBSI |
|---|---|---|---|---|---|
| - | Denominator of gearbox encoder/load | | | | POWER ON |
| A02, A05 | | | | - | DWORD |
| - | 8 | 1, 1, 1, 1, 1, 1, 1, 1 | 1 | 2147000000 | 7/2 |
| 840di-basic | - | - | - | - | -1/- |
| 840di-universal | - | - | - | - | -1/- |
| 840di-plus | - | - | - | - | -1/- |

© Siemens AG 2004 All Rights Reserved

| 36922 | SAFE_ENC_GEAR_NUMERA | | | | FBSI |
|---|---|---|---|---|---|
| - | Numerator of gearbox encoder/load | | | | POWER ON |
| A02, A05 | | | | - | DWORD |
| - | 8 | 1, 1, 1, 1, 1, 1, 1, 1 | 1 | 2147000000 | 7/2 |
| 840di-basic | - | - | - | - | -1/- |
| 840di-universal | - | - | - | - | -1/- |
| 840di-plus | - | - | - | - | -1/- |

| 36925 | SAFE_ENC_POLARITY | | | | FBSI |
|---|---|---|---|---|---|
| - | Direction reversal of actual value | | | | POWER ON |
| A02, A05 | | | | - | DWORD |
| - | - | 1 | -1 | 1 | 7/2 |
| 840di-basic | - | - | - | - | -1/- |
| 840di-universal | - | - | - | - | -1/- |
| 840di-plus | - | - | - | - | -1/- |

| 36926 | SAFE_ENC_FREQ_LIMIT | | | | FBSI |
|---|---|---|---|---|---|
| - | Encoder frequency limit for safe operation | | | | POWER ON |
| A02, A05 | | | | - | DWORD |
| - | - | 300000 | 300000 | 420000 | 7/2 |
| 840di-basic | - | - | - | - | -1/- |
| 840di-universal | - | - | - | - | -1/- |
| 840di-plus | - | - | - | - | -1/- |

| 36930 | SAFE_STANDSTILL_TOL | | | | FBSI |
|---|---|---|---|---|---|
| mm, degrees | Standstill tolerance | | | | POWER ON |
| A05 | | | | - | DOUBLE |
| - | - | 1. | 0. | 100. | 7/2 |
| 840di-basic | - | - | - | - | -1/- |
| 840di-universal | - | - | - | - | -1/- |
| 840di-plus | - | - | - | - | -1/- |

© Siemens AG 2004 All Rights Reserved

| 36931 | SAFE_VELO_LIMIT | | | | FBSI |
|---|---|---|---|---|---|
| mm/min, rev/min | Limit value for safe velocity | | | | POWER ON |
| A05, A04 | | | | - | DOUBLE |
| - | 4 | 2000., 2000., 2000., 2000. | - | - | 7/2 |
| 840di-basic | - | - | - | - | -1/- |
| 840di-universal | - | - | - | - | -1/- |
| 840di-plus | - | - | - | - | -1/- |

| 36932 | SAFE_VELO_OVR_FACTOR | | | | FBSI |
|---|---|---|---|---|---|
| % | Safe velocity override value | | | | POWER ON |
| A05 | | | | - | DWORD |
| - | 16 | 100, 100, 100, 100, 100, 100, 100, 100, 100, 100, 100, 100, 100... | 1 | 100 | 7/2 |
| 840di-basic | - | - | - | - | -1/- |
| 840di-universal | - | - | - | - | -1/- |
| 840di-plus | - | - | - | - | -1/- |

| 36933 | SAFE_DES_VELO_LIMIT | | | | FBSI |
|---|---|---|---|---|---|
| % | SG setpoint speed limit | | | | RESET |
| A05, A04 | | | | - | DWORD |
| - | - | 0 | 0 | 100 | 7/2 |
| 840di-basic | - | - | - | - | -1/- |
| 840di-universal | - | - | - | - | -1/- |
| 840di-plus | - | - | - | - | -1/- |

| 36934 | SAFE_POS_LIMIT_PLUS | | | | FBSI |
|---|---|---|---|---|---|
| mm, degrees | Upper limit of safe end position | | | | POWER ON |
| A03, A05 | | | | - | DOUBLE |
| - | 2 | 100000., 100000. | -2147000 | 2147000 | 7/2 |
| 840di-basic | - | - | - | - | -1/- |
| 840di-universal | - | - | - | - | -1/- |
| 840di-plus | - | - | - | - | -1/- |

© Siemens AG 2004 All Rights Reserved

| 36935 | SAFE_POS_LIMIT_MINUS | | | | FBSI |
|---|---|---|---|---|---|
| mm, degrees | Lower limit of safe end position | | | | POWER ON |
| A03, A05 | | | | - | DOUBLE |
| - | 2 | -100000., -100000. | -2147000 | 2147000 | 7/2 |
| 840di-basic | - | - | - | - | -1/- |
| 840di-universal | - | - | - | - | -1/- |
| 840di-plus | - | - | - | - | -1/- |

| 36936 | SAFE_CAM_POS_PLUS | | | | FBSI |
|---|---|---|---|---|---|
| mm, degrees | Plus cam position for safe cams | | | | POWER ON |
| A03, A05 | | | | - | DOUBLE |
| - | 4 | 10., 10., 10., 10. | -2147000 | 2147000 | 7/2 |
| 840di-basic | - | - | - | - | -1/- |
| 840di-universal | - | - | - | - | -1/- |
| 840di-plus | - | - | - | - | -1/- |

| 36937 | SAFE_CAM_POS_MINUS | | | | FBSI |
|---|---|---|---|---|---|
| mm, degrees | Minus cam position for safe cams | | | | POWER ON |
| A03, A05 | | | | - | DOUBLE |
| - | 4 | -10., -10., -10., -10. | -2147000 | 2147000 | 7/2 |
| 840di-basic | - | - | - | - | -1/- |
| 840di-universal | - | - | - | - | -1/- |
| 840di-plus | - | - | - | - | -1/- |

| 36940 | SAFE_CAM_TOL | | | | FBSI |
|---|---|---|---|---|---|
| mm, degrees | Tolerance for safe cams | | | | POWER ON |
| A05 | | | | - | DOUBLE |
| - | - | 0.1 | 0.001 | 10 | 7/2 |
| 840di-basic | - | - | - | - | -1/- |
| 840di-universal | - | - | - | - | -1/- |
| 840di-plus | - | - | - | - | -1/- |

| 36942 | SAFE_POS_TOL | | | | FBSI |
|---|---|---|---|---|---|
| mm, degrees | Tolerance actual value cross-check | | | | POWER ON |
| A05 | | | | - | DOUBLE |
| - | - | 0.1 | 0.001 | 360 | 7/2 |
| 840di-basic | - | - | - | - | -1/- |
| 840di-universal | - | - | - | - | -1/- |
| 840di-plus | - | - | - | - | -1/- |

© Siemens AG 2004 All Rights Reserved

| **36944** | **SAFE_REFP_POS_TOL** | | | | FBSI |
|---|---|---|---|---|---|
| mm, degrees | Tolerance actual value check (referencing) | | | | POWER ON |
| A05 | | | | - | DOUBLE |
| - | - | 0.01 | 0 | 36 | 7/2 |
| 840di-basic | - | - | - | - | -1/- |
| 840di-universal | - | - | - | - | -1/- |
| 840di-plus | - | - | - | - | -1/- |

| **36946** | **SAFE_VELO_X** | | | | FBSI |
|---|---|---|---|---|---|
| mm/min, rev/min | Speed limit n_x | | | | POWER ON |
| A05 | | | | - | DOUBLE |
| - | - | 20. | 0. | 6000. | 7/2 |
| 840di-basic | - | - | - | - | -1/- |
| 840di-universal | - | - | - | - | -1/- |
| 840di-plus | - | - | - | - | -1/- |

| **36948** | **SAFE_STOP_VELO_TOL** | | | | FBSI |
|---|---|---|---|---|---|
| mm/min, rev/min | Velocity tolerance for safe braking ramp | | | | POWER ON |
| A05 | | | | - | DOUBLE |
| - | - | 300. | 0. | 120000. | 7/2 |
| 840di-basic | - | - | - | - | -1/- |
| 840di-universal | - | - | - | - | -1/- |
| 840di-plus | - | - | - | - | -1/- |

| **36949** | **SAFE_SLIP_VELO_TOL** | | | | FBSI |
|---|---|---|---|---|---|
| mm/min, rev/min | Slip velocity tolerance | | | | POWER ON |
| A05 | | | | - | DOUBLE |
| - | - | 6. | 0. | 6000. | 7/2 |
| 840di-basic | - | - | - | - | -1/- |
| 840di-universal | - | - | - | - | -1/- |
| 840di-plus | - | - | - | - | -1/- |

© Siemens AG 2004 All Rights Reserved

| **36950** | **SAFE_MODE_SWITCH_TIME** | | | | FBSI |
|---|---|---|---|---|---|
| s | Tolerance time for SGE switchover | | | | POWER ON |
| A05 | | | | - | DOUBLE |
| - | - | 0.5 | 0 | 10. | 7/2 |
| 840di-basic | - | - | - | - | -1/- |
| 840di-universal | - | - | - | - | -1/- |
| 840di-plus | - | - | - | - | -1/- |

| **36951** | **SAFE_VELO_SWITCH_DELAY** | | | | FBSI |
|---|---|---|---|---|---|
| s | Delay time for velocity changeover | | | | POWER ON |
| A05 | | | | - | DOUBLE |
| - | - | 0.1 | 0 | 60 | 7/2 |
| 840di-basic | - | - | - | - | -1/- |
| 840di-universal | - | - | - | - | -1/- |
| 840di-plus | - | - | - | - | -1/- |

| **36952** | **SAFE_STOP_SWITCH_TIME_C** | | | | FBSI |
|---|---|---|---|---|---|
| s | Transition time STOP C to safe standstill | | | | POWER ON |
| A05 | | | | - | DOUBLE |
| - | - | 0.1 | 0 | 10 | 7/2 |
| 840di-basic | - | - | - | - | -1/- |
| 840di-universal | - | - | - | - | -1/- |
| 840di-plus | - | - | - | - | -1/- |

| **36953** | **SAFE_STOP_SWITCH_TIME_D** | | | | FBSI |
|---|---|---|---|---|---|
| s | Transition time STOP D to safe standstill | | | | POWER ON |
| A05 | | | | - | DOUBLE |
| - | - | 0.1 | 0 | 60 | 7/2 |
| 840di-basic | - | - | - | - | -1/- |
| 840di-universal | - | - | - | - | -1/- |
| 840di-plus | - | - | - | - | -1/- |

| **36954** | **SAFE_STOP_SWITCH_TIME_E** | | | | FBSI |
|---|---|---|---|---|---|
| s | Transition time STOP E to safe standstill (in preparation) | | | | POWER ON |
| A05 | | | | - | DOUBLE |
| - | - | 0.1 | 0 | 60 | 7/2 |
| 840di-basic | - | - | - | - | -1/- |
| 840di-universal | - | - | - | - | -1/- |
| 840di-plus | - | - | - | - | -1/- |

© Siemens AG 2004 All Rights Reserved

| 36955 | SAFE_STOP_SWITCH_TIME_F | | | | FBSI |
|---|---|---|---|---|---|
| s | Transition time STOP F to STOP B | | | | POWER ON |
| A05 | | | | - | DOUBLE |
| - | - | 0.0 | 0 | 60 | 7/2 |
| 840di-basic | - | - | - | - | -1/- |
| 840di-universal | - | - | - | - | -1/- |
| 840di-plus | - | - | - | - | -1/- |

| 36956 | SAFE_PULSE_DISABLE_DELAY | | | | FBSI |
|---|---|---|---|---|---|
| s | Delay time for pulse suppression | | | | POWER ON |
| A05 | | | | - | DOUBLE |
| - | - | 0.1 | 0 | 10 | 7/2 |
| 840di-basic | - | - | - | - | -1/- |
| 840di-universal | - | - | - | - | -1/- |
| 840di-plus | - | - | - | - | -1/- |

| 36957 | SAFE_PULSE_DIS_CHECK_TIME | | | | FBSI |
|---|---|---|---|---|---|
| s | Time for checking pulse suppression | | | | POWER ON |
| A05 | | | | - | DOUBLE |
| - | - | 0.1 | 0 | 10 | 7/2 |
| 840di-basic | - | - | - | - | -1/- |
| 840di-universal | - | - | - | - | -1/- |
| 840di-plus | - | - | - | - | -1/- |

| 36958 | SAFE_ACCEPTANCE_TST_TIMEOUT | | | | FBSI |
|---|---|---|---|---|---|
| s | Time limit for acceptance test duration | | | | POWER ON |
| A05 | | | | - | DOUBLE |
| - | - | 40.0 | 5 | 100 | 7/2 |
| 840di-basic | - | - | - | - | -1/- |
| 840di-universal | - | - | - | - | -1/- |
| 840di-plus | - | - | - | - | -1/- |

| 36960 | SAFE_STANDSTILL_VELO_TOL | | | | FBSI |
|---|---|---|---|---|---|
| mm/min, rev/min | Creep speed for pulse suppression | | | | POWER ON |
| A05, A04 | | | | - | DOUBLE |
| - | - | 0.0 | 0.0 | 6000. | 7/2 |
| 840di-basic | - | - | - | - | -1/- |
| 840di-universal | - | - | - | - | -1/- |
| 840di-plus | - | - | - | - | -1/- |

© Siemens AG 2004 All Rights Reserved

| 36961 | SAFE_VELO_STOP_MODE | | | | FBSI |
|---|---|---|---|---|---|
| - | Stop reaction for safe velocity | | | | POWER ON |
| A05 | | | | - | BYTE |
| - | - | 5 | 0 | 14 | 7/2 |
| 840di-basic | - | - | - | - | -1/- |
| 840di-universal | - | - | - | - | -1/- |
| 840di-plus | - | - | - | - | -1/- |

| 36962 | SAFE_POS_STOP_MODE | | | | FBSI |
|---|---|---|---|---|---|
| - | Stop reaction for safe end position | | | | POWER ON |
| A05 | | | | - | BYTE |
| - | - | 2 | 2 | 4 | 7/2 |
| 840di-basic | - | - | - | - | -1/- |
| 840di-universal | - | - | - | - | -1/- |
| 840di-plus | - | - | - | - | -1/- |

| 36963 | SAFE_VELO_STOP_REACTION | | | | FBSI |
|---|---|---|---|---|---|
| - | Stop reaction for safe velocity | | | | POWER ON |
| A05 | | | | - | BYTE |
| - | 4 | 2, 2, 2, 2 | 0 | 14 | 7/2 |
| 840di-basic | - | - | - | - | -1/- |
| 840di-universal | - | - | - | - | -1/- |
| 840di-plus | - | - | - | - | -1/- |

| 36964 | SAFE_IPO_STOP_GROUP | | | | FBSI |
|---|---|---|---|---|---|
| - | Safety-integrated IPO-response grouping | | | | RESET |
| A01, A05 | | | | - | BYTE |
| - | - | 0 | 0 | 1 | 7/2 |
| 840di-basic | - | - | - | - | -1/- |
| 840di-universal | - | - | - | - | -1/- |
| 840di-plus | - | - | - | - | -1/- |

| 36965 | SAFE_PARK_ALARM_SUPPRESS | | | | FBSI |
|---|---|---|---|---|---|
| - | Alarm suppression on parking axis | | | | POWER ON |
| A01 | | | | - | BOOLEAN |
| - | - | FALSE | - | - | 7/2 |
| 840di-basic | - | - | - | - | -1/- |
| 840di-universal | - | - | - | - | -1/- |
| 840di-plus | - | - | - | - | -1/- |

© Siemens AG 2004 All Rights Reserved

| 36966 | SAFE_BRAKETEST_TORQUE | | | | FBSI |
|---|---|---|---|---|---|
| % | Holding torque for brake test | | | | POWER ON |
| A05, A10 | | | | CTEQ | DOUBLE |
| - | - | 5.0 | 0.0 | 800.0 | 7/2 |
| 840di-basic | - | - | - | - | -1/- |
| 840di-universal | - | - | - | - | -1/- |
| 840di-plus | - | - | - | - | -1/- |

| 36967 | SAFE_BRAKETEST_POS_TOL | | | | FBSI |
|---|---|---|---|---|---|
| mm, degrees | Position tolerance for brake test | | | | POWER ON |
| A05, A10 | | | | CTEQ | DOUBLE |
| - | - | 1.0 | - | - | 7/2 |
| 840di-basic | - | - | - | - | -1/- |
| 840di-universal | - | - | - | - | -1/- |
| 840di-plus | - | - | - | - | -1/- |

| 36968 | SAFE_BRAKETEST_CONTROL | | | | - |
|---|---|---|---|---|---|
| - | Enhanced function control for brake test | | | | POWER ON |
| A05, A10 | | | | CTEQ | DWORD |
| - | - | 0 | 0 | 1 | 7/2 |
| 840di-basic | - | - | - | - | -1/- |
| 840di-universal | - | - | - | - | -1/- |
| 840di-plus | - | - | - | - | -1/- |

| 36970 | SAFE_SVSS_DISABLE_INPUT | | | | FBSI |
|---|---|---|---|---|---|
| - | Input assignment SBH/SG deselection | | | | POWER ON |
| A01, A05 | | | | - | DWORD |
| - | - | 0 | - | - | 7/2 |
| 840di-basic | - | - | - | - | -1/- |
| 840di-universal | - | - | - | - | -1/- |
| 840di-plus | - | - | - | - | -1/- |

| 36971 | SAFE_SS_DISABLE_INPUT | | | | FBSI |
|---|---|---|---|---|---|
| - | Input assignment SBH deselection | | | | POWER ON |
| A01, A05 | | | | - | DWORD |
| - | - | 0 | - | - | 7/2 |
| 840di-basic | - | - | - | - | -1/- |
| 840di-universal | - | - | - | - | -1/- |
| 840di-plus | - | - | - | - | -1/- |

© Siemens AG 2004 All Rights Reserved

| 36972 | SAFE_VELO_SELECT_INPUT | | | | FBSI |
|---|---|---|---|---|---|
| - | Input assignment SG selection | | | | POWER ON |
| A01, A05 | | | | - | DWORD |
| - | 2 | 0, 0 | - | - | 7/2 |
| 840di-basic | - | - | - | - | -1/- |
| 840di-universal | - | - | - | - | -1/- |
| 840di-plus | - | - | - | - | -1/- |

| 36973 | SAFE_POS_SELECT_INPUT | | | | FBSI |
|---|---|---|---|---|---|
| - | Input assignment SE selection | | | | POWER ON |
| A01, A05 | | | | - | DWORD |
| - | - | 0 | - | - | 7/2 |
| 840di-basic | - | - | - | - | -1/- |
| 840di-universal | - | - | - | - | -1/- |
| 840di-plus | - | - | - | - | -1/- |

| 36974 | SAFE_GEAR_SELECT_INPUT | | | | FBSI |
|---|---|---|---|---|---|
| - | Input assignment speed ratio selection | | | | POWER ON |
| A01, A05 | | | | - | DWORD |
| - | 3 | 0, 0, 0 | - | - | 7/2 |
| 840di-basic | - | - | - | - | -1/- |
| 840di-universal | - | - | - | - | -1/- |
| 840di-plus | - | - | - | - | -1/- |

| 36975 | SAFE_STOP_REQUEST_INPUT | | | | FBSI |
|---|---|---|---|---|---|
| - | Input assignment test stop selection | | | | POWER ON |
| A01, A05 | | | | - | DWORD |
| - | - | 0 | - | - | 7/2 |
| 840di-basic | - | - | - | - | -1/- |
| 840di-universal | - | - | - | - | -1/- |
| 840di-plus | - | - | - | - | -1/- |

| 36976 | SAFE_PULSE_STATUS_INPUT | | | | FBSI |
|---|---|---|---|---|---|
| - | Input assignment status pulses suppressed | | | | POWER ON |
| A01, A05 | | | | - | DWORD |
| - | - | 0 | - | - | 7/2 |
| 840di-basic | - | - | - | - | -1/- |
| 840di-universal | - | - | - | - | -1/- |
| 840di-plus | - | - | - | - | -1/- |

© Siemens AG 2004 All Rights Reserved

| 36977 | SAFE_EXT_STOP_INPUT | | | | FBSI |
|---|---|---|---|---|---|
| - | Input assignment for external stop request | | | | POWER ON |
| A01, A05 | | | | - | DWORD |
| - | 4 | 0, 0, 0, 0 | - | - | 7/2 |
| 840di-basic | - | - | - | - | -1/- |
| 840di-universal | - | - | - | - | -1/- |
| 840di-plus | - | - | - | - | -1/- |

| 36978 | SAFE_OVR_INPUT | | | | FBSI |
|---|---|---|---|---|---|
| - | Input assignment for SG override | | | | POWER ON |
| A01, A05 | | | | - | DWORD |
| - | 4 | 0, 0, 0, 0 | - | - | 7/2 |
| 840di-basic | - | - | - | - | -1/- |
| 840di-universal | - | - | - | - | -1/- |
| 840di-plus | - | - | - | - | -1/- |

| 36979 | SAFE_STOP_REQUEST_EXT_INPUT | | | | FBSI |
|---|---|---|---|---|---|
| - | Input assignment test ext. shutdown | | | | POWER ON |
| A01, A05 | | | | - | DWORD |
| - | - | 0 | - | - | 7/2 |
| 840di-basic | - | - | - | - | -1/- |
| 840di-universal | - | - | - | - | -1/- |
| 840di-plus | - | - | - | - | -1/- |

| 36980 | SAFE_SVSS_STATUS_OUTPUT | | | | FBSI |
|---|---|---|---|---|---|
| - | Output assignment SBH/SG active | | | | POWER ON |
| A01, A05 | | | | - | DWORD |
| - | - | 0 | - | - | 7/2 |
| 840di-basic | - | - | - | - | -1/- |
| 840di-universal | - | - | - | - | -1/- |
| 840di-plus | - | - | - | - | -1/- |

© Siemens AG 2004 All Rights Reserved

| 36981 | SAFE_SS_STATUS_OUTPUT | | | | FBSI |
|---|---|---|---|---|---|
| - | Output assignment SBH active | | | | POWER ON |
| A01, A05 | | | | - | DWORD |
| - | - | 0 | - | - | 7/2 |
| 840di-basic | - | - | - | - | -1/- |
| 840di-universal | - | - | - | - | -1/- |
| 840di-plus | - | - | - | - | -1/- |

| 36982 | SAFE_VELO_STATUS_OUTPUT | | | | FBSI |
|---|---|---|---|---|---|
| - | Output assignment for active SG selection | | | | POWER ON |
| A01, A05 | | | | - | DWORD |
| - | 2 | 0, 0 | - | - | 7/2 |
| 840di-basic | - | - | - | - | -1/- |
| 840di-universal | - | - | - | - | -1/- |
| 840di-plus | - | - | - | - | -1/- |

| 36984 | SAFE_EXT_PULSE_ENAB_OUTPUT | | | | FBSI |
|---|---|---|---|---|---|
| - | Output assignment enable pulses external | | | | POWER ON |
| A01, A05 | | | | - | DWORD |
| - | - | 0 | - | - | 7/2 |
| 840di-basic | - | - | - | - | -1/- |
| 840di-universal | - | - | - | - | -1/- |
| 840di-plus | - | - | - | - | -1/- |

| 36985 | SAFE_VELO_X_STATUS_OUTPUT | | | | FBSI |
|---|---|---|---|---|---|
| - | Output assignment n<n_x | | | | POWER ON |
| A01, A05 | | | | - | DWORD |
| - | - | 0 | - | - | 7/2 |
| 840di-basic | - | - | - | - | -1/- |
| 840di-universal | - | - | - | - | -1/- |
| 840di-plus | - | - | - | - | -1/- |

| 36986 | SAFE_PULSE_ENABLE_OUTPUT | | | | FBSI |
|---|---|---|---|---|---|
| - | Output assignment pulse suppression | | | | POWER ON |
| A01, A05 | | | | - | DWORD |
| - | - | 0 | - | - | 7/2 |
| 840di-basic | - | - | - | - | -1/- |
| 840di-universal | - | - | - | - | -1/- |
| 840di-plus | - | - | - | - | -1/- |

© Siemens AG 2004 All Rights Reserved

| 36987 | SAFE_REFP_STATUS_OUTPUT | | | | FBSI |
|---|---|---|---|---|---|
| - | Output assignment axis safely referenced | | | | POWER ON |
| A01, A05 | | | | - | DWORD |
| - | - | 0 | - | - | 7/2 |
| 840di-basic | - | - | - | - | -1/- |
| 840di-universal | - | - | - | - | -1/- |
| 840di-plus | - | - | - | - | -1/- |

| 36988 | SAFE_CAM_PLUS_OUTPUT | | | | FBSI |
|---|---|---|---|---|---|
| - | Output assignment SN1 + to SN4 + | | | | POWER ON |
| A01, A05 | | | | - | DWORD |
| - | 4 | 0, 0, 0, 0 | - | - | 7/2 |
| 840di-basic | - | - | - | - | -1/- |
| 840di-universal | - | - | - | - | -1/- |
| 840di-plus | - | - | - | - | -1/- |

| 36989 | SAFE_CAM_MINUS_OUTPUT | | | | FBSI |
|---|---|---|---|---|---|
| - | Output assignment SN1 - to SN4 - | | | | POWER ON |
| A01, A05 | | | | - | DWORD |
| - | 4 | 0, 0, 0, 0 | - | - | 7/2 |
| 840di-basic | - | - | - | - | -1/- |
| 840di-universal | - | - | - | - | -1/- |
| 840di-plus | - | - | - | - | -1/- |

| 36990 | SAFE_ACT_STOP_OUTPUT | | | | FBSI |
|---|---|---|---|---|---|
| - | Output assignment current stop | | | | POWER ON |
| A01, A05 | | | | - | DWORD |
| - | 4 | 0, 0, 0, 0 | - | - | 7/2 |
| 840di-basic | - | - | - | - | -1/- |
| 840di-universal | - | - | - | - | -1/- |
| 840di-plus | - | - | - | - | -1/- |

| 36992 | SAFE_CROSSCHECK_CYCLE | | | | FBSI |
|---|---|---|---|---|---|
| s | Display axial cross-check cycle | | | | POWER ON |
| N01, N06, N05 | | | | READ | DOUBLE |
| - | - | 0.0 | - | - | 7/0 |
| 840di-basic | - | - | - | - | -1/- |
| 840di-universal | - | - | - | - | -1/- |
| 840di-plus | - | - | - | - | -1/- |

© Siemens AG 2004 All Rights Reserved

| 36993 | SAFE_CONFIG_CHANGE_DATE | | | | FBSI |
|---|---|---|---|---|---|
| - | Date/time last change of SI-NCK MD | | | | POWER ON |
| EXP, A07, A05 | | | | READ | STRING |
| - | 5 | "", "", "", "", "" | - | - | 7/0 |
| 840di-basic | - | - | - | - | -1/- |
| 840di-universal | - | - | - | - | -1/- |
| 840di-plus | - | - | - | - | -1/- |

| 36994 | SAFE_PREV_CONFIG | | | | FBSI |
|---|---|---|---|---|---|
| - | Data of previous safety configuration | | | | POWER ON |
| EXP, A07, A05 | | | | READ | DWORD |
| - | 5 | 0, 0, 0, 0, 0 | - | - | 0/0 |
| 840di-basic | - | - | - | - | -1/- |
| 840di-universal | - | - | - | - | -1/- |
| 840di-plus | - | - | - | - | -1/- |

| 36995 | SAFE_STANDSTILL_POS | | | | FBSI |
|---|---|---|---|---|---|
| - | Standstill position | | | | POWER ON |
| A07, A05 | | | | - | DWORD |
| - | - | 0 | - | - | 0/0 |
| 840di-basic | - | - | - | - | -1/- |
| 840di-universal | - | - | - | - | -1/- |
| 840di-plus | - | - | - | - | -1/- |

| 36997 | SAFE_ACKN | | | | FBSI |
|---|---|---|---|---|---|
| - | User acknowledge | | | | POWER ON |
| A07, A05 | | | | - | DWORD |
| - | - | 0 | - | - | 7/2 |
| 840di-basic | - | - | - | - | -1/- |
| 840di-universal | - | - | - | - | -1/- |
| 840di-plus | - | - | - | - | -1/- |

| 36998 | SAFE_ACT_CHECKSUM | | | | FBSI |
|---|---|---|---|---|---|
| - | Actual checksum | | | | POWER ON |
| EXP, A07, A05 | | | | READ | DWORD |
| - | - | 0 | - | - | 7/0 |
| 840di-basic | - | - | - | - | -1/- |
| 840di-universal | - | - | - | - | -1/- |
| 840di-plus | - | - | - | - | -1/- |

© Siemens AG 2004 All Rights Reserved

| | | | | | |
|---|---|---|---|---|---|
| **36999** | **SAFE_DES_CHECKSUM** | | | | FBSI |
| - | Desired (expected) checksum | | | | POWER ON |
| EXP, A07, A05 | | | | - | DWORD |
| - | - | 0 | - | - | 7/1 |
| 840di-basic | - | - | - | - | -1/- |
| 840di-universal | - | - | - | - | -1/- |
| 840di-plus | - | - | - | - | -1/- |

## 2.7.8 Travel to fixed stop

| | | | | | |
|---|---|---|---|---|---|
| **37000** | **FIXED_STOP_MODE** | | | | F1 |
| - | Mode travel to fixed stop | | | | POWER ON |
| A10 | | | | CTEQ | BYTE |
| - | - | 0 | 0 | 3 | 7/2 |

| | | | | | |
|---|---|---|---|---|---|
| **37002** | **FIXED_STOP_CONTROL** | | | | F1 |
| - | Sequence control for travel to fixed stop | | | | POWER ON |
| A10 | | | | - | BYTE |
| - | - | 0 | 0 | 3 | 7/2 |

| | | | | | |
|---|---|---|---|---|---|
| **37010** | **FIXED_STOP_TORQUE_DEF** | | | | F1 |
| % | Default fixed stop clamping torque | | | | POWER ON |
| A10 | | | | CTEQ | DOUBLE |
| - | - | 5.0 | 0.0 | 100.0 | 7/2 |

| | | | | | |
|---|---|---|---|---|---|
| **37012** | **FIXED_STOP_TORQUE_RAMP_TIME** | | | | F1 |
| s | Time period until reaching the changed torque limit | | | | NEW CONF |
| A10 | | | | - | DOUBLE |
| - | - | 0.0 | - | - | 7/2 |

| | | | | | |
|---|---|---|---|---|---|
| **37014** | **FIXED_STOP_TORQUE_FACTOR** | | | | F1 |
| - | Adaption factor torque limit | | | | NEW CONF |
| A10 | | | | - | DOUBLE |
| - | - | 1.0 | - | - | 7/2 |

© Siemens AG 2004 All Rights Reserved

| | | | | | |
|---|---|---|---|---|---|
| **37020** | **FIXED_STOP_WINDOW_DEF** | | | | F1 |
| mm, degrees | Default fixed-stop monitoring window | | | | POWER ON |
| A05, A10 | | | | CTEQ | DOUBLE |
| - | - | 1.0 | - | - | 7/2 |

| | | | | | |
|---|---|---|---|---|---|
| **37030** | **FIXED_STOP_THRESHOLD** | | | | F1 |
| mm, degrees | Threshold for fixed stop detection | | | | NEW CONF |
| A10 | | | | - | DOUBLE |
| - | - | 2.0 | - | - | 7/2 |

| | | | | | |
|---|---|---|---|---|---|
| **37040** | **FIXED_STOP_BY_SENSOR** | | | | F1 |
| - | Fixed stop detection by sensor | | | | IMMEDIATELY |
| A10 | | | | CTEQ | BYTE |
| - | - | 0 | 0 | 3 | 7/2 |

| | | | | | |
|---|---|---|---|---|---|
| **37050** | **FIXED_STOP_ALARM_MASK** | | | | F1 |
| - | Enable of the fixed stop alarms | | | | NEW CONF |
| A05, A10 | | | | - | BYTE |
| - | - | 1 | 0 | 15 | 7/2 |

| | | | | | |
|---|---|---|---|---|---|
| **37052** | **FIXED_STOP_ALARM_REACTION** | | | | F1 |
| - | Reaction with fixed stop alarms | | | | POWER ON |
| A05, A10 | | | | - | BYTE |
| - | - | 0 | - | - | 7/1 |

| | | | | | |
|---|---|---|---|---|---|
| **37060** | **FIXED_STOP_ACKN_MASK** | | | | F1 |
| - | PLC acknowledgements observed for travel to fixed stop | | | | POWER ON |
| A10 | | | | CTEQ | BYTE |
| - | - | 0 | 0 | 3 | 7/2 |

| | | | | | |
|---|---|---|---|---|---|
| **37070** | **FIXED_STOP_ANA_TORQUE** | | | | F1 |
| % | Torque limit when approaching the fixed stop for analog drives | | | | POWER ON |
| A10 | | | | CTEQ | DOUBLE |
| - | - | 5.0 | 0.0 | 100.0 | 7/2 |

| | | | | | |
|---|---|---|---|---|---|
| **37080** | **FOC_ACTIVATION_MODE** | | | | F1 |
| - | Initial setting of modal torque or force limitation | | | | POWER ON |
| A10 | | | | - | BYTE |
| - | - | 0 | 0 | 3 | 7/2 |

© Siemens AG 2004 All Rights Reserved

| 37100 | GANTRY_AXIS_TYPE | | | | G1 |
|---|---|---|---|---|---|
| - | Gantry axis definition | | | | POWER ON |
| A01, A10 | | | | CTEQ | BYTE |
| - | - | 0 | 0 | 33 | 7/2 |

| 37110 | GANTRY_POS_TOL_WARNING | | | | G1 |
|---|---|---|---|---|---|
| mm, degrees | Gantry warning limit | | | | RESET |
| A05, A10 | | | | - | DOUBLE |
| - | - | 0.0 | - | - | 7/2 |

| 37120 | GANTRY_POS_TOL_ERROR | | | | G1 |
|---|---|---|---|---|---|
| mm, degrees | Gantry trip limit | | | | POWER ON |
| A05, A10 | | | | - | DOUBLE |
| - | - | 0.0 | - | - | 7/2 |

| 37130 | GANTRY_POS_TOL_REF | | | | G1 |
|---|---|---|---|---|---|
| mm, degrees | Gantry trip limit during referencing | | | | POWER ON |
| A05, A10 | | | | - | DOUBLE |
| - | - | 0.0 | - | - | 7/2 |

| 37135 | GANTRY_ACT_POS_TOL_ERROR | | | | - |
|---|---|---|---|---|---|
| mm, degrees | Actual Gantry trip limit | | | | RESET |
| A05, A10 | | | | - | DOUBLE |
| - | - | 0.0 | - | - | 7/2 |

| 37140 | GANTRY_BREAK_UP | | | | G1 |
|---|---|---|---|---|---|
| - | Invalidate gantry axis grouping | | | | RESET |
| EXP, A01, A10 | | | | CTEQ | BOOLEAN |
| - | - | FALSE | - | - | 7/2 |

| 37150 | GANTRY_FUNCTION_MASK | | | | - |
|---|---|---|---|---|---|
| - | Gantry functions | | | | RESET |
| A10 | | | | - | DWORD |
| - | - | 0x00 | 0 | 0x3 | 7/2 |

| 37160 | LEAD_FUNCTION_MASK | | | | M3 |
|---|---|---|---|---|---|
| - | Functions for master value coupling | | | | NEW CONF |
| A10 | | | | CTEQ | DWORD |
| - | - | 0x01 | 0 | 0x1 | 1/1 |

© Siemens AG 2004 All Rights Reserved

| 37200 | COUPLE_POS_TOL_COARSE | | | | S3 |
|---|---|---|---|---|---|
| mm, degrees | Threshold value for 'synchronization coarse' | | | | NEW CONF |
| A05, A10 | | | | - | DOUBLE |
| - | - | 1.0 | - | - | 7/2 |

| 37210 | COUPLE_POS_TOL_FINE | | | | S3 |
|---|---|---|---|---|---|
| mm, degrees | Threshold value for 'synchronization fine' | | | | NEW CONF |
| A05, A10 | | | | - | DOUBLE |
| - | - | 0.5 | - | - | 7/2 |

| 37220 | COUPLE_VELO_TOL_COARSE | | | | S3 |
|---|---|---|---|---|---|
| mm/min, rev/min | Velocity tolerance 'coarse' | | | | NEW CONF |
| A05, A10 | | | | - | DOUBLE |
| - | - | 60.0 | - | - | 7/2 |

| 37230 | COUPLE_VELO_TOL_FINE | | | | S3 |
|---|---|---|---|---|---|
| mm/min, rev/min | Velocity tolerance 'coarse' | | | | NEW CONF |
| A05, A10 | | | | - | DOUBLE |
| - | - | 30.0 | - | - | 7/2 |

| 37250 | MS_ASSIGN_MASTER_SPEED_CMD | | | | TE3 |
|---|---|---|---|---|---|
| - | Master axis number for speed setpoint coupling | | | | POWER ON |
| A10 | | | | - | DWORD |
| - | - | 0 | 0 | 31 | 7/2 |
| 840d-2a2c | - | - | - | 2 | -/- |
| 840d-6a2c | - | - | - | 6 | -/- |
| 840d-12a2c | - | - | - | 12 | -/- |

| 37252 | MS_ASSIGN_MASTER_TORQUE_CTR | | | | TE3 |
|---|---|---|---|---|---|
| - | Master axis number for torque control | | | | POWER ON |
| A10 | | | | - | DWORD |
| - | - | 0 | 0 | 31 | 7/2 |

| 37253 | MS_FUNCTION_MASK | | | | - |
|---|---|---|---|---|---|
| - | Master-Slave settings | | | | NEW CONF |
| A10 | | | | - | DWORD |
| - | - | 0x0 | - | - | 7/2 |

© Siemens AG 2004 All Rights Reserved

| 37254 | MS_TORQUE_CTRL_MODE | | | | TE3 |
|---|---|---|---|---|---|
| - | Torque balance control configuration | | | | IMMEDIATELY |
| A10 | | | | - | DWORD |
| - | - | 0 | 0 | 3 | 7/2 |

| 37255 | MS_TORQUE_CTRL_ACTIVATION | | | | TE3 |
|---|---|---|---|---|---|
| - | Torque compensatory controller activation | | | | NEW CONF |
| A10 | | | | - | BYTE |
| - | - | 0 | 0 | 1 | 7/2 |

| 37256 | MS_TORQUE_CTRL_P_GAIN | | | | TE3 |
|---|---|---|---|---|---|
| % | Torque balance control gain factor | | | | NEW CONF |
| A10 | | | | - | DOUBLE |
| - | - | 0.0 | 0.0 | 100.0 | 7/2 |

| 37258 | MS_TORQUE_CTRL_I_TIME | | | | TE3 |
|---|---|---|---|---|---|
| s | Torque balance control integral action time | | | | NEW CONF |
| A10 | | | | - | DOUBLE |
| - | - | 0.0 | 0.0 | 100.0 | 7/2 |

| 37260 | MS_MAX_CTRL_VELO | | | | TE3 |
|---|---|---|---|---|---|
| % | Torque balance control limit | | | | NEW CONF |
| A10 | | | | - | DOUBLE |
| - | - | 100.0 | 0.0 | 100.0 | 7/2 |

| 37262 | MS_COUPLING_ALWAYS_ACTIVE | | | | TE3 |
|---|---|---|---|---|---|
| - | Permanent activation master coupling | | | | NEW CONF |
| A10 | | | | - | BYTE |
| - | - | 0 | 0 | 1 | 7/2 |

| 37263 | MS_SPIND_COUPLING_MODE | | | | TE3 |
|---|---|---|---|---|---|
| - | Coupling behavior of a spindle | | | | NEW CONF |
| A10 | | | | - | BYTE |
| - | - | 0 | 0 | 1 | 7/2 |

| 37264 | MS_TENSION_TORQUE | | | | TE3 |
|---|---|---|---|---|---|
| % | Master-slave tension torque | | | | IMMEDIATELY |
| A10 | | | | - | DOUBLE |
| - | - | 0.0 | -100.0 | 100.0 | 7/2 |

© Siemens AG 2004 All Rights Reserved

| | | | | | |
|---|---|---|---|---|---|
| **37266** | **MS_TENSION_TORQ_FILTER_TIME** | | | | TE3 |
| s | Time constant tension torque | | | | NEW CONF |
| A10 | | | | - | DOUBLE |
| - | - | 0.0 | 0.0 | 100.0 | 7/2 |

| | | | | | |
|---|---|---|---|---|---|
| **37268** | **MS_TORQUE_WEIGHT_SLAVE** | | | | TE3 |
| % | Torque weight slave axis | | | | NEW CONF |
| A10 | | | | - | DOUBLE |
| - | - | 50.0 | 1.0 | 100.0 | 7/2 |

| | | | | | |
|---|---|---|---|---|---|
| **37270** | **MS_VELO_TOL_COARSE** | | | | TE3 |
| % | Master-slave speed tolerance, coarse | | | | NEW CONF |
| A10 | | | | - | DOUBLE |
| - | - | 5.0 | - | - | 7/2 |

| | | | | | |
|---|---|---|---|---|---|
| **37272** | **MS_VELO_TOL_FINE** | | | | TE3 |
| % | Master-slave speed tolerance, fine | | | | NEW CONF |
| A10 | | | | - | DOUBLE |
| - | - | 1.0 | - | - | 7/2 |

| | | | | | |
|---|---|---|---|---|---|
| **37274** | **MS_MOTION_DIR_REVERSE** | | | | TE3 |
| - | Invert travel direction slave axis | | | | NEW CONF |
| A10 | | | | - | BYTE |
| - | - | 0 | 0 | 1 | 7/2 |

| | | | | | |
|---|---|---|---|---|---|
| **37400** | **EPS_TLIFT_TANG_STEP** | | | | T3 |
| mm, degrees | Angle of tangent for corner recognition | | | | RESET |
| A10 | | | | CTEQ | DOUBLE |
| - | - | 5.0 | - | - | 7/2 |

| | | | | | |
|---|---|---|---|---|---|
| **37402** | **TANG_OFFSET** | | | | T3 |
| mm, degrees | Default angle for tangential correction | | | | RESET |
| A10 | | | | CTEQ | DOUBLE |
| - | - | 0.0 | - | - | 7/2 |

| | | | | | |
|---|---|---|---|---|---|
| **37500** | **ESR_REACTION** | | | | M3 |
| - | Axial mode of 'Extended Stop and Retract' | | | | NEW CONF |
| EXP, A01, A10 | | | | CTEQ | BYTE |
| - | - | 0 | 0 | 22 | 7/2 |

© Siemens AG 2004 All Rights Reserved

| 37510 | AX_ESR_DELAY_TIME1 | | | | P2 |
|---|---|---|---|---|---|
| s | Delay time ESR axis (PLC control axis) | | | | NEW CONF |
| EXP, A01, A10 | | | | CTEQ | DOUBLE |
| - | - | 0.0 | - | - | 7/2 |

| 37511 | AX_ESR_DELAY_TIME2 | | | | P2 |
|---|---|---|---|---|---|
| s | ESR time f. interpol. deceleration single axis | | | | NEW CONF |
| EXP, A01, A10 | | | | CTEQ | DOUBLE |
| - | - | 0.0 | - | - | 7/2 |

| 37550 | EG_VEL_WARNING | | | | M3 |
|---|---|---|---|---|---|
| % | Threshold for 'Velocity/Acceleration warning threshold' | | | | NEW CONF |
| A05, A10 | | | | - | DOUBLE |
| - | - | 90.0 | 0 | 100 | 7/2 |

| 37560 | EG_ACC_TOL | | | | M3 |
|---|---|---|---|---|---|
| % | Threshold value for 'Axis accelerating' | | | | NEW CONF |
| A05, A10 | | | | - | DOUBLE |
| - | - | 25.0 | - | - | 7/2 |

| 37600 | PROFIBUS_ACTVAL_LEAD_TIME | | | | G3 |
|---|---|---|---|---|---|
| s | Input Time (Profibus Ti) | | | | POWER ON |
| EXP, A01, A02 | | | | - | DOUBLE |
| - | - | 0.000125 | 0.0 | 0.032 | 0/0 |

| 37602 | PROFIBUS_OUTVAL_DELAY_TIME | | | | G3 |
|---|---|---|---|---|---|
| s | Setpoint delay time (Profibus To) | | | | POWER ON |
| EXP, A01, A02 | | | | - | DOUBLE |
| - | - | 0.003 | 0.0 | 0.032 | 0/0 |

| 37610 | PROFIBUS_CTRL_CONFIG | | | | K4 |
|---|---|---|---|---|---|
| - | Profibus control bit configuration | | | | POWER ON |
| EXP, A01 | | | | - | BYTE |
| - | - | 0 | 0 | 2 | 7/2 |

| 37620 | PROFIBUS_TORQUE_RED_RESOL | | | | - |
|---|---|---|---|---|---|
| % | Profibus resolution of torque reduction | | | | NEW CONF |
| EXP, A01 | | | | - | DOUBLE |
| - | - | 1.0 | 0.01 | 10.0 | 7/2 |

© Siemens AG 2004 All Rights Reserved

## 2.7.9 Axis-specific memory settings

| 38000 | MM_ENC_COMP_MAX_POINTS | | | | K3 |
|---|---|---|---|---|---|
| - | Number of intermediate points for interpol. compensation (SRAM) | | | | POWER ON |
| A01, A09, A02 | | | | - | DWORD |
| - | 2 | 0, 0 | 0 | 5000 | 7/2 |

| 38010 | MM_QEC_MAX_POINTS | | | | K3 |
|---|---|---|---|---|---|
| - | Number of values for quadrant error compens. with neural network | | | | POWER ON |
| A01, A09 | | | | - | DWORD |
| - | 1 | 0 | 0 | 1040 | 7/2 |

© Siemens AG 2004 All Rights Reserved

# 2.8 Setting data

**Note**

Machine data values which may differ according to the system used are listed in additional lines below the table header. In these cases, the fourth line is the standard assignment, the fifth line and any further lines contain differing values for the systems stated. The minus sign in a field means: The standard values stated in line 4 applies. The entry "-1" stated under protection means that there is no machine data for the system stated.

| **Number** | **MD identifier** | | | | Cross reference |
|---|---|---|---|---|---|
| Unit | Name | | | | Active |
| Display filters | | | | Attributes | D type |
| System | Dimension | Standard value | Minimum value | Maximum value | Protect. Level |

## 2.8.1 General setting data

| **41010** | **JOG_VAR_INCR_SIZE** | | | | H1 |
|---|---|---|---|---|---|
| - | Size of the variable increment for JOG | | | | IMMEDIATELY |
| - | | | | - | DOUBLE |
| - | - | 0. | - | - | 7/7 |

| **41050** | **JOG_CONT_MODE_LEVELTRIGGRD** | | | | H1 |
|---|---|---|---|---|---|
| - | JOG continuous: (1) jog mode/ (0) continuous operation | | | | IMMEDIATELY |
| - | | | | - | BOOLEAN |
| - | - | TRUE | - | - | 7/7 |

| **41100** | **JOG_REV_IS_ACTIVE** | | | | H1 |
|---|---|---|---|---|---|
| - | JOG mode: (1) revolutional feedrate / (0) feedrate | | | | IMMEDIATELY |
| - | | | | - | BOOLEAN |
| - | - | FALSE | - | - | 7/7 |

| **41110** | **JOG_SET_VELO** | | | | H1 |
|---|---|---|---|---|---|
| mm/min | Axis velocity in JOG | | | | IMMEDIATELY |
| - | | | | - | DOUBLE |
| - | - | 0.0 | - | - | 7/7 |

© Siemens AG 2004 All Rights Reserved

| | | | | | |
|---|---|---|---|---|---|
| **41120** | **JOG_REV_SET_VELO** | | | | H1 |
| mm/rev | Revolutional feedrate of axes in JOG mode | | | | IMMEDIATELY |
| - | | | | - | DOUBLE |
| - | - | 0.0 | - | - | 7/7 |

| | | | | | |
|---|---|---|---|---|---|
| **41130** | **JOG_ROT_AX_SET_VELO** | | | | H1 |
| rev/min | Axis velocity for rotary axes in JOG mode | | | | IMMEDIATELY |
| - | | | | - | DOUBLE |
| - | - | 0.0 | - | - | 7/7 |

| | | | | | |
|---|---|---|---|---|---|
| **41200** | **JOG_SPIND_SET_VELO** | | | | H1 |
| rev/min | Speed for spindle JOG mode | | | | IMMEDIATELY |
| - | | | | - | DOUBLE |
| - | - | 0.0 | - | - | 7/7 |

| | | | | | |
|---|---|---|---|---|---|
| **41300** | **CEC_TABLE_ENABLE** | | | | K3 |
| - | Default selection for compensation table | | | | IMMEDIATELY |
| - | | | | - | BOOLEAN |
| - | 62 | FALSE,FALSE,FALSE, FALSE,FALSE,FALSE. .. | - | - | 7/7 |

| | | | | | |
|---|---|---|---|---|---|
| **41310** | **CEC_TABLE_WEIGHT** | | | | K3 |
| - | Default factor selection for compensation tables | | | | IMMEDIATELY |
| - | | | | - | DOUBLE |
| - | 62 | 1.0,1.0,1.0,1.0,1.0,1.0, 1.0,1.0,1.0... | - | - | 7/7 |

| | | | | | |
|---|---|---|---|---|---|
| **41500** | **SW_CAM_MINUS_POS_TAB_1** | | | | N3 |
| mm/inch, degrees | Switching points with falling edge of cams 1-8 | | | | NEW CONF |
| - | | | | - | DOUBLE |
| - | 8 | 0.0,0.0,0.0,0.0,0.0,0.0, 0.0,0.0 | - | - | 7/7 |

| | | | | | |
|---|---|---|---|---|---|
| **41501** | **SW_CAM_PLUS_POS_TAB_1** | | | | N3 |
| mm/inch, degrees | Switching points with rising edge of cams 1-8 | | | | NEW CONF |
| - | | | | - | DOUBLE |
| - | 8 | 0.0,0.0,0.0,0.0,0.0,0.0, 0.0,0.0 | - | - | 7/7 |

© Siemens AG 2004 All Rights Reserved

| | | | | | |
|---|---|---|---|---|---|
| **41502** | **SW_CAM_MINUS_POS_TAB_2** | | | | N3 |
| mm/inch, degrees | Switching points with falling edge of cams 9-16 | | | | NEW CONF |
| - | | | | - | DOUBLE |
| - | 8 | 0.0,0.0,0.0,0.0,0.0,0.0, 0.0,0.0 | - | - | 7/7 |

| | | | | | |
|---|---|---|---|---|---|
| **41503** | **SW_CAM_PLUS_POS_TAB_2** | | | | N3 |
| mm/inch, degrees | Switching points with rising edge of cams 9-16 | | | | NEW CONF |
| - | | | | - | DOUBLE |
| - | 8 | 0.0,0.0,0.0,0.0,0.0,0.0, 0.0,0.0 | - | - | 7/7 |

| | | | | | |
|---|---|---|---|---|---|
| **41504** | **SW_CAM_MINUS_POS_TAB_3** | | | | N3 |
| mm/inch, degrees | Switching points of falling cams 17-24 | | | | NEW CONF |
| - | | | | - | DOUBLE |
| - | 8 | 0.0,0.0,0.0,0.0,0.0,0.0, 0.0,0.0 | - | - | 7/7 |

| | | | | | |
|---|---|---|---|---|---|
| **41505** | **SW_CAM_PLUS_POS_TAB_3** | | | | N3 |
| mm/inch, degrees | Switching points of rising cams 17-24 | | | | NEW CONF |
| - | | | | - | DOUBLE |
| - | 8 | 0.0,0.0,0.0,0.0,0.0,0.0, 0.0,0.0 | - | - | 7/7 |

| | | | | | |
|---|---|---|---|---|---|
| **41506** | **SW_CAM_MINUS_POS_TAB_4** | | | | N3 |
| mm/inch, degrees | Switching points of falling cams 25-32 | | | | NEW CONF |
| - | | | | - | DOUBLE |
| - | 8 | 0.0,0.0,0.0,0.0,0.0,0.0, 0.0,0.0 | - | - | 7/7 |

| | | | | | |
|---|---|---|---|---|---|
| **41507** | **SW_CAM_PLUS_POS_TAB_4** | | | | N3 |
| mm/inch, degrees | Switching points of rising cams 25-32 | | | | NEW CONF |
| - | | | | - | DOUBLE |
| - | 8 | 0.0,0.0,0.0,0.0,0.0,0.0, 0.0,0.0 | - | - | 7/7 |

| | | | | | |
|---|---|---|---|---|---|
| **41520** | **SW_CAM_MINUS_TIME_TAB_1** | | | | N3 |
| s | Lead times for the "-" switching points of cams 1-8 | | | | NEW CONF |
| - | | | | - | DOUBLE |
| - | 8 | 0.0,0.0,0.0,0.0,0.0,0.0, 0.0,0.0 | - | - | 7/7 |

© Siemens AG 2004 All Rights Reserved

| | | | | | |
|---|---|---|---|---|---|
| **41521** | **SW_CAM_PLUS_TIME_TAB_1** | | | | N3 |
| s | Lead times for the "+" switching points of cams 1-8 | | | | NEW CONF |
| - | | | | - | DOUBLE |
| - | 8 | 0.0,0.0,0.0,0.0,0.0,0.0,0.0,0.0,0.0 | - | - | 7/7 |

| | | | | | |
|---|---|---|---|---|---|
| **41522** | **SW_CAM_MINUS_TIME_TAB_2** | | | | N3 |
| s | Lead times for the "-" switching points of cams 9-16 | | | | NEW CONF |
| - | | | | - | DOUBLE |
| - | 8 | 0.0,0.0,0.0,0.0,0.0,0.0,0.0,0.0,0.0 | - | - | 7/7 |

| | | | | | |
|---|---|---|---|---|---|
| **41523** | **SW_CAM_PLUS_TIME_TAB_2** | | | | N3 |
| s | Lead times for the "+" switching points of cams 9-16 | | | | NEW CONF |
| - | | | | - | DOUBLE |
| - | 8 | 0.0,0.0,0.0,0.0,0.0,0.0,0.0,0.0,0.0 | - | - | 7/7 |

| | | | | | |
|---|---|---|---|---|---|
| **41524** | **SW_CAM_MINUS_TIME_TAB_3** | | | | N3 |
| s | SD lead times for the "minus" switching points of cams 17 - 24. | | | | NEW CONF |
| - | | | | - | DOUBLE |
| - | 8 | 0.0,0.0,0.0,0.0,0.0,0.0,0.0,0.0,0.0 | - | - | 7/7 |

| | | | | | |
|---|---|---|---|---|---|
| **41525** | **SW_CAM_PLUS_TIME_TAB_3** | | | | N3 |
| s | SD lead times for the "plus" switching points of cams 17 - 24 | | | | NEW CONF |
| - | | | | - | DOUBLE |
| - | 8 | 0.0,0.0,0.0,0.0,0.0,0.0,0.0,0.0,0.0 | - | - | 7/7 |

| | | | | | |
|---|---|---|---|---|---|
| **41526** | **SW_CAM_MINUS_TIME_TAB_4** | | | | N3 |
| s | SD lead times for the "minus" switching points of cams 25 - 32 | | | | NEW CONF |
| - | | | | - | DOUBLE |
| - | 8 | 0.0,0.0,0.0,0.0,0.0,0.0,0.0,0.0,0.0 | - | - | 7/7 |

| | | | | | |
|---|---|---|---|---|---|
| **41527** | **SW_CAM_PLUS_TIME_TAB_4** | | | | N3 |
| s | SD lead times for the "plus" switching points of cams 25 - 32 | | | | NEW CONF |
| - | | | | - | DOUBLE |
| - | 8 | 0.0,0.0,0.0,0.0,0.0,0.0,0.0,0.0,0.0 | - | - | 7/7 |

© Siemens AG 2004 All Rights Reserved

| | | | | | |
|---|---|---|---|---|---|
| **41600** | **COMPAR_THRESHOLD_1** | | | | A4 |
| - | Threshold value of the 1st comparator | | | | IMMEDIATELY |
| - | | | | - | DOUBLE |
| - | 8 | 0.0,0.0,0.0,0.0,0.0,0.0, 0.0,0.0 | - | - | 7/7 |

| | | | | | |
|---|---|---|---|---|---|
| **41601** | **COMPAR_THRESHOLD_2** | | | | A4 |
| - | Threshold value of the 2nd comparator | | | | IMMEDIATELY |
| - | | | | - | DOUBLE |
| - | 8 | 0.0,0.0,0.0,0.0,0.0,0.0, 0.0,0.0 | - | - | 7/7 |

| | | | | | |
|---|---|---|---|---|---|
| **41700** | **AXCT_SWWIDTH** | | | | B3 |
| - | Default rotation of axis container | | | | NEW CONF |
| - | | | | CTDE | DWORD |
| - | 16 | 0,0,0,0,0,0,0,0,0,0,0,0, 0,0,0,0 | -32 | 32 | 7/7 |

## 2.8.2 Channel-specific setting data

| | | | | | |
|---|---|---|---|---|---|
| **42000** | **THREAD_START_ANGLE** | | | | K1 |
| degrees | Starting angle for thread | | | | IMMEDIATELY |
| - | | | | - | DOUBLE |
| - | - | 0.,0.,0.,0.,0.,0.,0.,0.,0.,0 .,0.,0.,0.... | - | - | 7/7 |

| | | | | | |
|---|---|---|---|---|---|
| **42010** | **THREAD_RAMP_DISP** | | | | V1 |
| mm | Acceleration behavior of axis when thread cutting | | | | IMMEDIATELY |
| - | | | | - | DOUBLE |
| - | 2 | -1., -1.,-1., -1.,-1., -1.,-1., -1.... | -1. | 999999. | 7/7 |

| | | | | | |
|---|---|---|---|---|---|
| **42100** | **DRY_RUN_FEED** | | | | V1 |
| mm/min | Dry run feedrate | | | | IMMEDIATELY |
| - | | | | - | DOUBLE |
| - | - | 5000.,5000.,5000.,500 0.,5000.,5000.... | - | - | 7/7 |

© Siemens AG 2004 All Rights Reserved

| 42101 | DRY_RUN_FEED_MODE | | | | V1 |
|---|---|---|---|---|---|
| - | Mode for dry run velocity | | | | IMMEDIATELY |
| - | | | | - | BYTE |
| - | - | 0,0,0,0,0,0,0,0,0,0,0,0,0,0,0,0 | 0 | 12 | 7/7 |

| 42110 | DEFAULT_FEED | | | | V1,FBFA |
|---|---|---|---|---|---|
| mm/min | Path feed default value | | | | IMMEDIATELY |
| - | | | | - | DOUBLE |
| - | - | 0.,0.,0.,0.,0.,0.,0.,0.,0.,0.,0.,0.,0.,0.,0.,0.... | - | - | 7/7 |

| 42120 | APPROACH_FEED | | | | - |
|---|---|---|---|---|---|
| mm/min | Path feedrate in approach blocks | | | | IMMEDIATELY |
| - | | | | - | DOUBLE |
| - | - | 0.,0.,0.,0.,0.,0.,0.,0.,0.,0.,0.,0.,0.,0.,0.,0.... | - | - | 7/7 |

| 42125 | SERUPRO_SYNC_MASK | | | | - |
|---|---|---|---|---|---|
| - | synchronization in approach blocks | | | | IMMEDIATELY |
| - | | | | - | DWORD |
| - | - | 0,0,0,0,0,0,0,0,0,0,0,0,0,0,0,0 | - | - | 7/7 |

| 42140 | DEFAULT_SCALE_FACTOR_P | | | | FBFA |
|---|---|---|---|---|---|
| - | Default scaling factor for address P | | | | IMMEDIATELY |
| - | | | | - | DWORD |
| - | - | 1,1,1,1,1,1,1,1,1,1,1,1,1,1,1,1 | - | - | 7/7 |

| 42150 | DEFAULT_ROT_FACTOR_R | | | | FBFA |
|---|---|---|---|---|---|
| - | Default rotation factor for address R | | | | IMMEDIATELY |
| - | | | | - | DOUBLE |
| - | - | 0.,0.,0.,0.,0.,0.,0.,0.,0.,0.,0.,0.,0.,0.,0.,0.... | - | - | 7/7 |

| 42160 | EXTERN_FIXED_FEEDRATE_F1_F9 | | | | FBFA |
|---|---|---|---|---|---|
| - | Fixed feedrates F1 - F9 | | | | IMMEDIATELY |
| - | | | | - | DOUBLE |
| - | 10 | 0., 0., 0., 0., 0., 0., 0., 0., 0., 0.... | - | - | 7/7 |

© Siemens AG 2004 All Rights Reserved

| 42162 | EXTERN_DOUBLE_TURRET_DIST | | | | FBFA |
|---|---|---|---|---|---|
| - | Double turret head tool distance | | | | IMMEDIATELY |
| - | | | | - | DOUBLE |
| - | - | 0.,0.,0.,0.,0.,0.,0.,0.,0.,0.,0.,0.,0.... | - | - | 7/7 |

| 42200 | SINGLEBLOCK2_STOPRE | | | | BA |
|---|---|---|---|---|---|
| - | Activate SBL2 debug mode | | | | IMMEDIATELY |
| - | | | | - | BOOLEAN |
| - | - | FALSE,FALSE,FALSE,FALSE,FALSE,FALSE... | - | - | 7/7 |

| 42300 | COUPLE_RATIO_1 | | | | S3 |
|---|---|---|---|---|---|
| - | Speed ratio synchr. spindle mode, numerator(0), denominator(1) | | | | IMMEDIATELY |
| - | | | | - | DOUBLE |
| - | 2 | 1.0, 1.0,1.0, 1.0,1.0, 1.0,1.0, 1.0... | -1.0e8 | 1.0e8 | 7/7 |

| 42400 | PUNCH_DWELLTIME | | | | N4 |
|---|---|---|---|---|---|
| s | Dwell time for punching and nibbling | | | | IMMEDIATELY |
| - | | | | - | DOUBLE |
| - | - | 1.0,0.0,0.0,0.0,0.0,0.0,0.0,0.0,0.0,0.0... | - | - | 7/7 |

| 42402 | NIBPUNCH_PRE_START_TIME | | | | N4 |
|---|---|---|---|---|---|
| s | Delay time (punch/nibble) with G603 | | | | IMMEDIATELY |
| - | | | | - | DOUBLE |
| - | - | .02,0.0,0.0,0.0,0.0,0.0,0.0,0.0,0.0,0.0... | - | - | 7/7 |

| 42404 | MINTIME_BETWEEN_STROKES | | | | N4 |
|---|---|---|---|---|---|
| s | Minimum time between 2 strokes in seconds | | | | POWER ON |
| - | | | | - | DOUBLE |
| - | - | 0.0,0.0,0.0,0.0,0.0,0.0,0.0,0.0,0.0,0.0... | - | - | 7/7 |

| 42440 | FRAME_OFFSET_INCR_PROG | | | | K2 |
|---|---|---|---|---|---|
| - | Traversing from zero offset with incr. programming | | | | IMMEDIATELY |
| - | | | | - | BOOLEAN |
| - | - | TRUE,TRUE,TRUE,TRUE,TRUE,TRUE,TRUE... | - | - | 7/7 |

© Siemens AG 2004 All Rights Reserved

| 42442 | TOOL_OFFSET_INCR_PROG | | | | W1 |
|---|---|---|---|---|---|
| - | Traversing from zero offset with incr. programming | | | | IMMEDIATELY |
| - | | | | - | BOOLEAN |
| - | - | TRUE,TRUE,TRUE,TRUE,TRUE,TRUE,TRUE... | - | - | 7/7 |

| 42444 | TARGET_BLOCK_INCR_PROG | | | | BA |
|---|---|---|---|---|---|
| - | Set down mode after search run with calculation | | | | IMMEDIATELY |
| - | | | | - | BOOLEAN |
| - | - | TRUE,TRUE,TRUE,TRUE,TRUE,TRUE,TRUE... | - | - | 7/7 |

| 42450 | CONTPREC | | | | B1,K6 |
|---|---|---|---|---|---|
| mm | Contour accuracy | | | | IMMEDIATELY |
| - | | | | - | DOUBLE |
| - | - | 0.1,0.1,0.1,0.1,0.1,0.1,0.1,0.1,0.1,0.1... | 0.000001 | 999999. | 7/7 |

| 42460 | MINFEED | | | | B1,K6 |
|---|---|---|---|---|---|
| mm/min | Minimum path feedrate for CPRECON | | | | IMMEDIATELY |
| - | | | | - | DOUBLE |
| - | - | 1.,1.,1.,1.,1.,1.,1.,1.,1.,1.,1.,1.,1.,1.... | 0.000001 | 999999. | 7/7 |

| 42465 | SMOOTH_CONTUR_TOL | | | | B1 |
|---|---|---|---|---|---|
| mm | Maximal contour tolerance on smoothing | | | | IMMEDIATELY |
| - | | | | - | DOUBLE |
| - | - | 0.05,0.05,0.05,0.05,0.05,0.05,0.05,0.05... | 0.000001 | 999999. | 7/7 |

| 42466 | SMOOTH_ORI_TOL | | | | B1 |
|---|---|---|---|---|---|
| degrees | Max.angle tolerance tool orient.on smooth. | | | | IMMEDIATELY |
| - | | | | - | DOUBLE |
| - | - | 0.05,0.05,0.05,0.05,0.05,0.05,0.05,0.05... | 0.000001 | 90. | 7/7 |

| 42470 | CRIT_SPLINE_ANGLE | | | | W1,PGA |
|---|---|---|---|---|---|
| degrees | Critical angle of spline and polynomial interpol. and compressor | | | | IMMEDIATELY |
| - | | | | - | DOUBLE |
| - | - | 36.0,36.0,36.0,36.0,36.0,36.0,36.0,36.0... | 0.0 | 89.0 | 7/7 |

© Siemens AG 2004 All Rights Reserved

| 42471 | MIN_CURV_RADIUS | | | | - |
|---|---|---|---|---|---|
| mm | Minimum radius of curvature | | | | IMMEDIATELY |
| EXP, C09 | | | | - | DOUBLE |
| - | - | 3.0,3.0,3.0,3.0,3.0,3.0, 3.0,3.0,3.0... | - | - | 7/7 |

| 42475 | COMPRESS_CONTUR_TOL | | | | F2,PGA |
|---|---|---|---|---|---|
| mm | Maximal contour deviation with compressor | | | | IMMEDIATELY |
| - | | | | - | DOUBLE |
| - | - | 0.05,0.05,0.05,0.05,0.0 5,0.05,0.05... | 0.000001 | 999999. | 7/7 |

| 42476 | COMPRESS_ORI_TOL | | | | F2,PGA |
|---|---|---|---|---|---|
| degrees | Max. deviation of tool orientation compressor | | | | IMMEDIATELY |
| - | | | | - | DOUBLE |
| - | - | 0.05,0.05,0.05,0.05,0.0 5,0.05,0.05... | 0.000001 | 90. | 7/7 |

| 42477 | COMPRESS_ORI_ROT_TOL | | | | F2,PGA |
|---|---|---|---|---|---|
| degrees | Max. deviation of tool rotation compressor | | | | IMMEDIATELY |
| - | | | | - | DOUBLE |
| - | - | 0.05,0.05,0.05,0.05,0.0 5,0.05,0.05... | 0.000001 | 90. | 7/7 |

| 42480 | STOP_CUTCOM_STOPRE | | | | W1 |
|---|---|---|---|---|---|
| - | Alarm response with tool radius compensation and preproc. stop | | | | IMMEDIATELY |
| - | | | | - | BOOLEAN |
| - | - | TRUE,TRUE,TRUE,TR UE,TRUE,TRUE,TRUE ... | - | - | 7/7 |

| 42490 | CUTCOM_G40_STOPRE | | | | W1 |
|---|---|---|---|---|---|
| - | Retraction behavior of TRC with prep. stop | | | | IMMEDIATELY |
| - | | | | - | BOOLEAN |
| - | - | FALSE,FALSE,FALSE, FALSE,FALSE,FALSE. .. | - | - | 7/7 |

| 42494 | CUTCOM_ACT_DEACT_CTRL | | | | W1 |
|---|---|---|---|---|---|
| - | Approach and retraction behavior for the tool radius compens. | | | | IMMEDIATELY |
| - | | | | - | DWORD |
| - | - | 2222,2222,2222,2222, 2222,2222,2222... | - | - | 7/7 |

© Siemens AG 2004 All Rights Reserved

| 42496 | CUTCOM_CLSD_CONT | | | | W1 |
|---|---|---|---|---|---|
| - | TRC behavior with closed contour | | | | IMMEDIATELY |
| - | | | | - | BOOLEAN |
| - | - | FALSE,FALSE,FALSE, FALSE,FALSE,FALSE. .. | - | - | 7/7 |

| 42500 | SD_MAX_PATH_ACCEL | | | | B2 |
|---|---|---|---|---|---|
| m/s² | Max. path acceleration | | | | IMMEDIATELY |
| - | | | | - | DOUBLE |
| - | - | 10000.,10000.,10000., 10000.,10000.... | 1.0e-3 | - | 7/7 |

| 42502 | IS_SD_MAX_PATH_ACCEL | | | | B2 |
|---|---|---|---|---|---|
| - | Evaluate SD SC_SD_MAX_PATH_ACCEL | | | | IMMEDIATELY |
| - | | | | - | BOOLEAN |
| - | - | FALSE,FALSE,FALSE, FALSE,FALSE,FALSE. .. | - | - | 7/7 |

| 42510 | SD_MAX_PATH_JERK | | | | B2 |
|---|---|---|---|---|---|
| m/s³ | Max. path-related jerk as SD | | | | IMMEDIATELY |
| - | | | | - | DOUBLE |
| - | - | 100000.,100000.,1000 00.,100000.... | 1.e-9 | - | 7/7 |

| 42512 | IS_SD_MAX_PATH_JERK | | | | B2 |
|---|---|---|---|---|---|
| - | Evaluate SD SD_MAX_PATH_JERK | | | | IMMEDIATELY |
| - | | | | - | BOOLEAN |
| - | - | FALSE,FALSE,FALSE, FALSE,FALSE,FALSE. .. | - | - | 7/7 |

| 42520 | CORNER_SLOWDOWN_START | | | | FBFA |
|---|---|---|---|---|---|
| mm | Start of feed reduction at G62. | | | | IMMEDIATELY |
| - | | | | - | DOUBLE |
| - | - | 0.,0.,0.,0.,0.,0.,0.,0.,0.,0 .,0.,0.,0.... | - | - | 7/7 |

| 42522 | CORNER_SLOWDOWN_END | | | | FBFA |
|---|---|---|---|---|---|
| mm | End of feed reduction at G62. | | | | IMMEDIATELY |
| - | | | | - | DOUBLE |
| - | - | 0.,0.,0.,0.,0.,0.,0.,0.,0.,0 .,0.,0.,0.... | - | - | 7/7 |

© Siemens AG 2004 All Rights Reserved

| 42524 | CORNER_SLOWDOWN_OVR | | | | FBFA |
|---|---|---|---|---|---|
| % | Feed override reduction at G62 | | | | IMMEDIATELY |
| - | | | | - | DOUBLE |
| - | - | 0.,0.,0.,0.,0.,0.,0.,0.,0.,0.,0.,0.,0.,0.,0.,0.... | - | - | 7/7 |

| 42526 | CORNER_SLOWDOWN_CRIT | | | | FBFA |
|---|---|---|---|---|---|
| degrees | Corner detection at G62 | | | | IMMEDIATELY |
| - | | | | - | DOUBLE |
| - | - | 0.,0.,0.,0.,0.,0.,0.,0.,0.,0.,0.,0.,0.,0.,0.,0.... | - | - | 7/7 |

| 42528 | CUTCOM_DECEL_LIMIT | | | | - |
|---|---|---|---|---|---|
| - | Feed lowering on circles of TRC | | | | IMMEDIATELY |
| - | | | | - | DOUBLE |
| - | - | 0.,0.,0.,0.,0.,0.,0.,0.,0.,0.,0.,0.,0.,0.,0.,0.... | 0. | 1. | 7/7 |

| 42600 | JOG_FEED_PER_REV_SOURCE | | | | V1 |
|---|---|---|---|---|---|
| - | Control revolutional feedrate in JOG | | | | IMMEDIATELY |
| - | | | | - | DWORD |
| - | - | 0,0,0,0,0,0,0,0,0,0,0,0,0,0,0,0,0,0,0,0 | -3 | 31 | 7/7 |

| 42650 | CART_JOG_MODE | | | | H1 |
|---|---|---|---|---|---|
| - | Coordinate system for Cartesian jog traverse | | | | IMMEDIATELY |
| - | | | | - | DWORD |
| - | - | 0x0,0x0,0x0,0x0,0x0,0x0,0x0,0x0,0x0,0x0,0x0,0x0... | 0 | 0x0404 | 7/7 |

| 42660 | ORI_JOG_MODE | | | | - |
|---|---|---|---|---|---|
| - | Definition of virtual kinemat. f. jog move | | | | IMMEDIATELY |
| - | | | | - | DWORD |
| - | - | 0,0,0,0,0,0,0,0,0,0,0,0,0,0,0,0,0,0,0,0 | 0 | 5 | 7/7 |

| 42670 | ORIPATH_SMOOTH_DIST | | | | - |
|---|---|---|---|---|---|
| mm, degrees | Path for smoothing of orientation | | | | IMMEDIATELY |
| - | | | | - | DOUBLE |
| - | - | 0.05,0.05,0.05,0.05,0.05,0.05,0.05,0.05... | 0.000001 | - | 7/7 |

© Siemens AG 2004 All Rights Reserved

| | | | | | |
|---|---|---|---|---|---|
| **42672** | **ORIPATH_SMOOTH_TOL** | | | | - |
| degrees | Tolerance for smoothing of orientation | | | | IMMEDIATELY |
| - | | | | - | DOUBLE |
| - | - | 0.05,0.05,0.05,0.05,0.05,0.05,0.05... | 0.000001 | - | 7/7 |

| | | | | | |
|---|---|---|---|---|---|
| **42700** | **EXT_PROG_PATH** | | | | K1 |
| - | Program path for external subroutine call EXTCALL | | | | IMMEDIATELY |
| - | | | | - | STRING |
| - | -1 | | - | - | 7/7 |

| | | | | | |
|---|---|---|---|---|---|
| **42750** | **ABSBLOCK_ENABLE** | | | | K1 |
| - | Enable base block display | | | | IMMEDIATELY |
| - | | | | - | BOOLEAN |
| - | - | TRUE,TRUE,TRUE,TRUE,TRUE,TRUE,TRUE... | - | - | 7/7 |

| | | | | | |
|---|---|---|---|---|---|
| **42800** | **SPIND_ASSIGN_TAB** | | | | S1 |
| - | Spindle number converter. | | | | IMMEDIATELY |
| - | | | | - | BYTE |
| - | 21 | 0, 1, 2, 3, 4, 5, 6, 7, 8, 9, 10, 11, 12, 13, 14, 15, 16, 17... | 0 | 21 | 7/7 |

| | | | | | |
|---|---|---|---|---|---|
| **42900** | **MIRROR_TOOL_LENGTH** | | | | W1 |
| - | Sign change of tool length with mirror image machining | | | | IMMEDIATELY |
| - | | | | - | BOOLEAN |
| - | - | FALSE,FALSE,FALSE,FALSE,FALSE,FALSE... | - | - | 7/7 |

| | | | | | |
|---|---|---|---|---|---|
| **42910** | **MIRROR_TOOL_WEAR** | | | | W1 |
| - | Sign change of tool wear with mirror image machining | | | | IMMEDIATELY |
| - | | | | - | BOOLEAN |
| - | - | FALSE,FALSE,FALSE,FALSE,FALSE,FALSE... | - | - | 7/7 |

© Siemens AG 2004 All Rights Reserved

| 42920 | WEAR_SIGN_CUTPOS | | | | W1 |
|---|---|---|---|---|---|
| - | Sign of tool wear depending on tool point direction | | | | IMMEDIATELY |
| - | | | | - | BOOLEAN |
| - | - | FALSE,FALSE,FALSE, FALSE,FALSE,FALSE... | - | - | 7/7 |

| 42930 | WEAR_SIGN | | | | W1 |
|---|---|---|---|---|---|
| - | Sign of wear | | | | IMMEDIATELY |
| - | | | | - | BOOLEAN |
| - | - | FALSE,FALSE,FALSE, FALSE,FALSE,FALSE... | - | - | 7/7 |

| 42935 | WEAR_TRANSFORM | | | | W1,W4 |
|---|---|---|---|---|---|
| - | Transformations for tool components | | | | IMMEDIATELY |
| - | | | | - | DWORD |
| - | - | 0,0,0,0,0,0,0,0,0,0,0,0, 0,0,0,0 | - | - | 7/7 |

| 42940 | TOOL_LENGTH_CONST | | | | W1 |
|---|---|---|---|---|---|
| - | Change of tool length components with change of active plane | | | | IMMEDIATELY |
| - | | | | - | DWORD |
| - | - | 0,0,0,0,0,0,0,0,0,0,0,0, 0,0,0,0 | - | - | 7/7 |

| 42950 | TOOL_LENGTH_TYPE | | | | W1 |
|---|---|---|---|---|---|
| - | Assignment of tool length components independent of tool type | | | | IMMEDIATELY |
| - | | | | - | DWORD |
| - | - | 0,0,0,0,0,0,0,0,0,0,0,0, 0,0,0,0 | - | - | 7/7 |

| 42960 | TOOL_TEMP_COMP | | | | W1 |
|---|---|---|---|---|---|
| - | Temperature compensation for tool | | | | IMMEDIATELY |
| - | | | | - | DOUBLE |
| - | 3 | 0.0, 0.0, 0.0,0.0, 0.0, 0.0... | - | - | 7/7 |

© Siemens AG 2004 All Rights Reserved

| 42970 | TOFF_LIMIT | | | | F2 |
|---|---|---|---|---|---|
| mm | Upper limit of corr. value via $AA_TOFF | | | | IMMEDIATELY |
| - | | | | - | DOUBLE |
| - | 3 | 100000000.0, 100000000.0, 100000000.0... | - | - | 7/7 |

| 42974 | TOCARR_FINE_CORRECTION | | | | W1 |
|---|---|---|---|---|---|
| - | Fine offset TCARR ON / OFF | | | | IMMEDIATELY |
| C08 | | | | - | BOOLEAN |
| - | - | FALSE,FALSE,FALSE, FALSE,FALSE,FALSE... | - | - | 7/7 |

| 42980 | TOFRAME_MODE | | | | K2 |
|---|---|---|---|---|---|
| - | Frame definition with TOFRAME, TOROT and PAROT | | | | IMMEDIATELY |
| - | | | | - | DWORD |
| - | - | 1000,1000,1000,1000, 1000,1000,1000... | - | - | 7/7 |

| 42984 | CUTDIRMOD | | | | - |
|---|---|---|---|---|---|
| - | Modification of $P_AD[2] or $P_AD[11] | | | | IMMEDIATELY |
| C08 | | | | - | STRING |
| - | -1 | | - | - | 7/7 |

| 42990 | MAX_BLOCKS_IN_IPOBUFFER | | | | K1 |
|---|---|---|---|---|---|
| - | Maximum no. of blocks in IPO buffer | | | | IMMEDIATELY |
| - | | | | - | DWORD |
| - | - | -1,-1,-1,-1,-1,-1,-1,-1,-1,-1,-1,-1,-1... | - | - | 7/7 |

© Siemens AG 2004 All Rights Reserved

## 2.8.3 Axis-specific setting data

| | | | | | |
|---|---|---|---|---|---|
| **43100** | **LEAD_TYPE** | | | | M3 |
| - | Defines what is used as master value | | | | RESET |
| - | | | | CTEQ | DWORD |
| - | - | 1 | 0 | 2 | 7/7 |

| | | | | | |
|---|---|---|---|---|---|
| **43102** | **LEAD_OFFSET_IN_POS** | | | | M3 |
| - | Offset of master value if coupled to this axis | | | | RESET |
| - | | | | - | DOUBLE |
| - | - | 0.0 | - | - | 7/7 |

| | | | | | |
|---|---|---|---|---|---|
| **43104** | **LEAD_SCALE_IN_POS** | | | | M3 |
| - | Scaling of master value if coupled to this axis | | | | RESET |
| - | | | | - | DOUBLE |
| - | - | 1.0 | - | - | 7/7 |

| | | | | | |
|---|---|---|---|---|---|
| **43106** | **LEAD_OFFSET_OUT_POS** | | | | M3 |
| mm, degrees | Offset of the functional value of the curve table | | | | RESET |
| - | | | | - | DOUBLE |
| - | - | 0.0 | - | - | 7/7 |

| | | | | | |
|---|---|---|---|---|---|
| **43108** | **LEAD_SCALE_OUT_POS** | | | | M3 |
| - | Scaling of functional value of the curve table | | | | RESET |
| - | | | | - | DOUBLE |
| - | - | 1.0 | - | - | 7/7 |

| | | | | | |
|---|---|---|---|---|---|
| **43120** | **DEFAULT_SCALE_FACTOR_AXIS** | | | | FBFA |
| - | Axial default scaling factor with G51 active | | | | IMMEDIATELY |
| - | | | | - | DWORD |
| - | - | 1 | - | - | 7/7 |

| | | | | | |
|---|---|---|---|---|---|
| **43200** | **SPIND_S** | | | | S1 |
| rev/min | Speed for spindle start by VDI | | | | IMMEDIATELY |
| - | | | | - | DOUBLE |
| - | - | 0.0 | - | - | 7/7 |

© Siemens AG 2004 All Rights Reserved

| 43202 | SPIND_CONSTCUT_S | | | | S1 |
|---|---|---|---|---|---|
| m/min | Const cut speed for spindle start by VDI | | | | IMMEDIATELY |
| - | | | | - | DOUBLE |
| - | - | 0.0 | - | - | 7/7 |

| 43210 | SPIND_MIN_VELO_G25 | | | | S1 |
|---|---|---|---|---|---|
| rev/min | Progr. spindle speed limitation G25 | | | | IMMEDIATELY |
| - | | | | - | DOUBLE |
| - | - | 0.0 | - | - | 7/7 |

| 43220 | SPIND_MAX_VELO_G26 | | | | S1 |
|---|---|---|---|---|---|
| rev/min | Progr. spindle speed limitation G26 | | | | IMMEDIATELY |
| - | | | | - | DOUBLE |
| - | - | 1000.0 | - | - | 7/7 |

| 43230 | SPIND_MAX_VELO_LIMS | | | | S1 |
|---|---|---|---|---|---|
| rev/min | Spindle speed limitation with G96 | | | | IMMEDIATELY |
| - | | | | - | DOUBLE |
| - | - | 100.0 | - | - | 7/7 |

| 43240 | M19_SPOS | | | | S1 |
|---|---|---|---|---|---|
| degrees | Spindle position for spindle positioning with M19. | | | | IMMEDIATELY |
| -, A12 | | | | - | DOUBLE |
| - | - | 0.0 | -10000000.0 | 10000000.0 | 7/7 |

| 43250 | M19_SPOSMODE | | | | S1 |
|---|---|---|---|---|---|
| - | Spindle position approach mode for spindle positioning with M19. | | | | IMMEDIATELY |
| -, A12 | | | | - | DWORD |
| - | - | 0 | 0 | 5 | 7/7 |

| 43300 | ASSIGN_FEED_PER_REV_SOURCE | | | | V1,P2,S1 |
|---|---|---|---|---|---|
| - | Revolutional feedrate for positioning axes/spindles | | | | IMMEDIATELY |
| - | | | | CTEQ | DWORD |
| - | - | 0 | -3 | 31 | 7/7 |

| 43340 | EXTERN_REF_POSITION_G30_1 | | | | FBFA |
|---|---|---|---|---|---|
| - | Reference point position for G30.1 | | | | IMMEDIATELY |
| -, A12 | | | | - | DOUBLE |
| - | - | 0.0 | - | - | 7/7 |

© Siemens AG 2004 All Rights Reserved

| 43350 | AA_OFF_LIMIT | | | | S5,FBSY |
|---|---|---|---|---|---|
| mm, degrees | Upper limit of offset value $AA_OFF with clearance control | | | | POWER ON |
| - | | | | CTEQ | DOUBLE |
| - | - | 100000000.0 | - | - | 7/7 |

| 43400 | WORKAREA_PLUS_ENABLE | | | | A3 |
|---|---|---|---|---|---|
| - | Working area limitation active in positive direction | | | | IMMEDIATELY |
| - | | | | CTEQ | BOOLEAN |
| - | - | FALSE | - | - | 7/7 |

| 43410 | WORKAREA_MINUS_ENABLE | | | | A3 |
|---|---|---|---|---|---|
| - | Working area limitation active in the negative direction | | | | IMMEDIATELY |
| - | | | | CTEQ | BOOLEAN |
| - | - | FALSE | - | - | 7/7 |

| 43420 | WORKAREA_LIMIT_PLUS | | | | A3 |
|---|---|---|---|---|---|
| mm, degrees | Working area limitation plus | | | | IMMEDIATELY |
| - | | | | - | DOUBLE |
| - | - | 1.0e+8 | - | - | 7/7 |

| 43430 | WORKAREA_LIMIT_MINUS | | | | A3 |
|---|---|---|---|---|---|
| mm, degrees | Working area limitation minus | | | | IMMEDIATELY |
| - | | | | - | DOUBLE |
| - | - | -1.0e+8 | - | - | 7/7 |

| 43500 | FIXED_STOP_SWITCH | | | | F1 |
|---|---|---|---|---|---|
| - | Selection of travel to fixed stop | | | | IMMEDIATELY |
| - | | | | - | BYTE |
| - | - | 0 | 0 | 1 | 7/7 |

| 43510 | FIXED_STOP_TORQUE | | | | F1 |
|---|---|---|---|---|---|
| % | Fixed stop clamping torque | | | | IMMEDIATELY |
| - | | | | - | DOUBLE |
| - | - | 5.0 | 0.0 | 800.0 | 7/7 |

| 43520 | FIXED_STOP_WINDOW | | | | F1 |
|---|---|---|---|---|---|
| mm, degrees | Fixed stop monitoring window | | | | IMMEDIATELY |
| - | | | | - | DOUBLE |
| - | - | 1.0 | - | - | 7/7 |

© Siemens AG 2004 All Rights Reserved

| 43600 | IPOBRAKE_BLOCK_EXCHANGE | | | | K1 |
|---|---|---|---|---|---|
| % | Block change criterion 'braking ramp' | | | | IMMEDIATELY |
| A06, A10 | | | | - | DOUBLE |
| - | - | 0.0 | 0 | 100.0 | 7/7 |

| 43610 | ADISPOSA_VALUE | | | | P2 |
|---|---|---|---|---|---|
| mm, degrees | Tolerance window 'braking ramp' | | | | IMMEDIATELY |
| A06, A10 | | | | - | DOUBLE |
| - | - | 0.0 | - | - | 7/7 |

| 43700 | OSCILL_REVERSE_POS1 | | | | P5 |
|---|---|---|---|---|---|
| mm, degrees | Oscillation reversal point 1 | | | | IMMEDIATELY |
| - | | | | - | DOUBLE |
| - | - | 0.0 | - | - | 7/7 |

| 43710 | OSCILL_REVERSE_POS2 | | | | P5 |
|---|---|---|---|---|---|
| mm, degrees | Oscillation reversal point 2 | | | | IMMEDIATELY |
| - | | | | - | DOUBLE |
| - | - | 0.0 | - | - | 7/7 |

| 43720 | OSCILL_DWELL_TIME1 | | | | P5 |
|---|---|---|---|---|---|
| s | Hold time at oscillation reversal point 1 | | | | IMMEDIATELY |
| - | | | | - | DOUBLE |
| - | - | 0.0 | - | - | 7/7 |

| 43730 | OSCILL_DWELL_TIME2 | | | | P5 |
|---|---|---|---|---|---|
| s | Hold time at oscillation reversal point 2 | | | | IMMEDIATELY |
| - | | | | - | DOUBLE |
| - | - | 0.0 | - | - | 7/7 |

| 43740 | OSCILL_VELO | | | | P5 |
|---|---|---|---|---|---|
| mm/min, rev/min | Feedrate of reciprocating axis | | | | IMMEDIATELY |
| - | | | | - | DOUBLE |
| - | - | 0.0 | - | - | 7/7 |

| 43750 | OSCILL_NUM_SPARK_CYCLES | | | | P5 |
|---|---|---|---|---|---|
| - | Number of spark-out strokes | | | | IMMEDIATELY |
| - | | | | - | DWORD |
| - | - | 0 | - | - | 7/7 |

© Siemens AG 2004 All Rights Reserved

| 43760 | OSCILL_END_POS | | | | P5 |
|---|---|---|---|---|---|
| mm, degrees | End position of the reciprocating axis | | | | IMMEDIATELY |
| - | | | | - | DOUBLE |
| - | - | 0.0 | - | - | 7/7 |

| 43770 | OSCILL_CTRL_MASK | | | | P5 |
|---|---|---|---|---|---|
| - | Oscillation sequence control screenform | | | | IMMEDIATELY |
| - | | | | - | DWORD |
| - | - | 0 | - | - | 7/7 |

| 43780 | OSCILL_IS_ACTIVE | | | | P5 |
|---|---|---|---|---|---|
| - | Activate oscillation movement | | | | IMMEDIATELY |
| - | | | | - | BOOLEAN |
| - | - | FALSE | - | - | 7/7 |

| 43790 | OSCILL_START_POS | | | | - |
|---|---|---|---|---|---|
| mm, degrees | to be defined | | | | IMMEDIATELY |
| - | | | | - | DOUBLE |
| - | - | 0.0 | - | - | 7/7 |

| 43900 | TEMP_COMP_ABS_VALUE | | | | K3 |
|---|---|---|---|---|---|
| - | Position-independent temperature compensation value | | | | IMMEDIATELY |
| - | | | | - | DOUBLE |
| - | - | 0.0 | - | - | 7/7 |

| 43910 | TEMP_COMP_SLOPE | | | | K3 |
|---|---|---|---|---|---|
| - | Lead angle for position-dependent temperature compensation | | | | IMMEDIATELY |
| - | | | | - | DOUBLE |
| - | - | 0.0 | - | - | 7/7 |

| 43920 | TEMP_COMP_REF_POSITION | | | | K3 |
|---|---|---|---|---|---|
| - | Reference position for position-dependent temper. compensation | | | | IMMEDIATELY |
| - | | | | - | DOUBLE |
| - | - | 0.0 | - | - | 7/7 |

■

© Siemens AG 2004 All Rights Reserved

# 2.9 Machine data for ManualTurn, ShopMill, ShopTurn

A list of the NC machine data is included in the software CD.

| | |
|---|---|
| ManualTurn: | tools\md\ctm.8x0 |
| ShopMill: | tools\md\cmm.8x0 |
| ShopTurn: | tools\md\st.8x0 |

Standard value, minimal value and maximal value are available also in chapter 2.4 .

■

© Siemens AG 2004 All Rights Reserved

## Für Notizen

© Siemens AG 2004 All Rights Reserved

# 3

# 3 Variables

3.1 Introduction ..... 3-418
3.1.1 General information ..... 3-419
3.1.2 Module types ..... 3-420
3.1.3 Variable types ..... 3-422
3.1.4 Data types ..... 3-424

3.2 System data ..... 3-426
3.2.1 Area N, Mod. Y: Global system data ..... 3-426
3.2.2 Area C, Mod. Y: Channel-specific system data ..... 3-435
3.2.3 Area N, Mod. PA: Global protection zones ..... 3-440
3.2.4 Area C, Mod. PA: Channel-specific protection zones ..... 3-447
3.2.5 Area N, Mod. YNCFL: NCK instruction groups ..... 3-454

3.3 State data of system ..... 3-455
3.3.1 Area N, Mod. S: Global state data ..... 3-455
3.3.2 Area N, Mod. SALA: Alarms: List organized according to time, oldest alarm appears first ..... 3-475
3.3.3 Area N, Mod. SALAP: Alarms: List organized according to priority ..... 3-477
3.3.4 Area N, Mod. SALAL: Alarms: Liste organized according to time, most recent alarm appears first ..... 3-479
3.3.5 Area N, Mod. SMA: State data: Machine axes ..... 3-481
3.3.6 Area N, Mod. SEMA: State data: Machine axes (extension of SMA) ..... 3-483
3.3.7 Area N, Mod. SSP: State data: Spindle ..... 3-505
3.3.8 Area N, Mod. SSP2: State data: Spindle ..... 3-508
3.3.9 Area N, Mod. FA: Active NCU global frames ..... 3-511
3.3.10 Area N, Mod. FB: NCU global base frames ..... 3-512
3.3.11 Area N, Mod. FU: NCU global settable frames ..... 3-513
3.3.12 Area N, Mod. YFAFL: NCK instruction groups (Fanuc) ..... 3-514
3.3.13 Area B, Mod. S: Mode-group-specific state data ..... 3-515

3.4 State data of channel ..... 3-516
3.4.1 Area C, Mod. M: Channel-specific machine data ..... 3-516
3.4.2 Area C, Mod. S: Channel-specific status data ..... 3-517
3.4.3 Area C, Mod. SINF: Part-program-specific status data ..... 3-548
3.4.4 Area C, Mod. SPARP: Part program information ..... 3-551
3.4.5 Area C, Mod. SPARPP: Program pointer in automatic operation ..... 3-556
3.4.6 Area C, Mod. SPARPI: Program pointer on interruption ..... 3-559
3.4.7 Area C, Mod. SPARPF: Program pointers for block search and stop run ..... 3-561
3.4.8 Area C, Mod. SSYNAC: Synchronous actions ..... 3-564
3.4.9 Area C, Mod. SYNACT: Channel-specific synchronous actions ..... 3-567
3.4.10 Area C, Mod. SNCF: Active G functions ..... 3-568

© Siemens AG 2004 All Rights Reserved

3.4.11 Area C, Mod. NIB: State data: Nibbling ... 3-570
3.4.12 Area C, Mod. FB: Channel-specific base frames ... 3-572
3.4.13 Area C, Mod. FS: Channel-specific system frames ... 3-573
3.4.14 Area C, Mod. AUXFU: Auxiliary functions ... 3-574

3.5 State data of axes ... 3-575
3.5.1 Area C, Mod. SMA: State data: Machine axes ... 3-575
3.5.2 Area C, Mod. SEMA: State data: Machine axes (extension of SMA) ... 3-577
3.5.3 Area C, Mod. SGA: State data: Geometry axes in tool offset memory ... 3-598
3.5.4 Area C, Mod. SEGA: State data: Geometry axes in tool offset memory (extension of SGA) ... 3-601
3.5.5 Area C, Mod. SSP: State data: Spindle ... 3-607
3.5.6 Area C, Mod. FU: Channel-specific settable frames ... 3-611
3.5.7 Area C, Mod. SSP2: State data: Spindle ... 3-613
3.5.8 Area C, Mod. FA: Active channel-specific frames ... 3-617
3.5.9 Area C, Mod. FE: Channel-specific external frame ... 3-618

3.6 State data of drives ... 3-619
3.6.1 Area H, Mod. S: Drive-specific state data (MSD) ... 3-619
3.6.2 Area V, Mod. S: Drive-specific status data (FDD) ... 3-622

3.7 Tool and magazine data ... 3-624
3.7.1 Area T, Mod. TO: Tool edge data: Offset data ... 3-624
3.7.2 Area T, Mod. TD: Tool data: General data ... 3-627
3.7.3 Area T, Mod. TS: Tool edge data: Monitoring data ... 3-630
3.7.4 Area T, Mod. TU: Tool data: User-defined data ... 3-632
3.7.5 Area T, Mod. TUE: Tool edge data: User-defined data ... 3-633
3.7.6 Area T, Mod. TG: Tool data: Grinding-specific data ... 3-634
3.7.7 Area T, Mod. TMC: Magazine data: Configuration data ... 3-636
3.7.8 Area T, Mod. TMV: Magazine data: Directory ... 3-638
3.7.9 Area T, Mod. TM: Magazine data: General data ... 3-639
3.7.10 Area T, Mod. TP: Magazine data: Location data ... 3-642
3.7.11 Area T, Mod. TPM: Magazine data: Multiple assignment of location data ... 3-644
3.7.12 Area T, Mod. TT: Magazine data: Location types ... 3-645
3.7.13 Area T, Mod. TV: Tool data: Directory ... 3-646
3.7.14 Area T, Mod. TF: Parametrizing, return parameters of _N_TMGETT, _N_TSEARC ... 3-648
3.7.15 Area T, Mod. TUM: Tool data: user magazine data ... 3-656
3.7.16 Area T, Mod. TUP: Tool data: user magatine place data ... 3-657
3.7.17 Area T, Mod. TUS: Tool data: user monitoring data ... 3-658
3.7.18 Area T, Mod. AD: Adapter data ... 3-659
3.7.19 Area T, Mod. AEV: Working offsets: Directory ... 3-660
3.7.20 Area T, Mod. TC: Toolholder parameters ... 3-663
3.7.21 Area T, Mod. TOE: Edge-related coarse total offsets, setup offsets ... 3-670
3.7.22 Area T, Mod. TOET: Edge-related coarse total offsets, transformed setup offsets ... 3-671
3.7.23 Area T, Mod. TOS: Edge-related location-dependent fine total offsets ... 3-672
3.7.24 Area T, Mod. TOST: Edge-related location-dependent fine total offsets, transformed ... 3-675
3.7.25 Area T, Mod. TOT: Edge data: Transformed offset data ... 3-676
3.7.26 Area T, Mod. TAD: Application-specific data ... 3-678
3.7.27 Area T, Mod. TAM: Application-specific magazine data ... 3-679
3.7.28 Area T, Mod. TAO: Application-specific cutting edge data ... 3-680
3.7.29 Area T, Mod. TAP: Application-specific magazine location data ... 3-681

© Siemens AG 2004 All Rights Reserved

3.7.30 Area T, Mod. TAS: Application-specific monitoring data ..... 3-682

3.8 Machine and setting data ..... 3-683
3.8.1 Area N, Mod. M: Global machine data ..... 3-683
3.8.2 Area A, Mod. M: Axis-specific machine data ..... 3-685
3.8.3 Area N, Mod. SE: Global setting data ..... 3-686
3.8.4 Area C, Mod. SE: Channel-specific setting data ..... 3-687
3.8.5 Area A, Mod. SE: Axis-specific setting data ..... 3-688

3.9 Parameters ..... 3-690
3.9.1 Area C, Mod. RP: Arithmetic parameters ..... 3-690
3.9.2 Area C, Mod. VSYN: Channel-specific user variables for synchronous actions ..... 3-691

3.10 Servo ..... 3-692
3.10.1 Area N, Mod. SD: Servo data ..... 3-692

3.11 Diagnosis data ..... 3-694
3.11.1 Area N, Mod. DIAGN: Global diagnostic data ..... 3-694
3.11.2 Area C, Mod. DIAGN: Channel-specific diagnosis data ..... 3-707
3.11.3 Area N, Mod. ETPD: Data lists for protocolling ..... 3-710
3.11.4 Area C, Mod. ETP: Types of events ..... 3-711

3.12 MMC/HMI State data ..... 3-716
3.12.1 Area M, Mod. S: Internal status data MMC ..... 3-716

© Siemens AG 2004 All Rights Reserved

# 3.1 Introduction

This section describes the NCK variables that an MMC or the PLC can access via the operator panel interface. (Access is read and for some variables write also). The access methods of the various components are described in the following user documentation:

**References:** /FBO/, Configuring the OP030 Operator Interface

/PK/, Configuring kit MMC 100/Unit Operator Panel

Description of PLC access method in:

**References:** /FB/, P3, "Basic PLC Program"

Description of the OEM-MMC access method in "OEM-MMC Description of Functions".

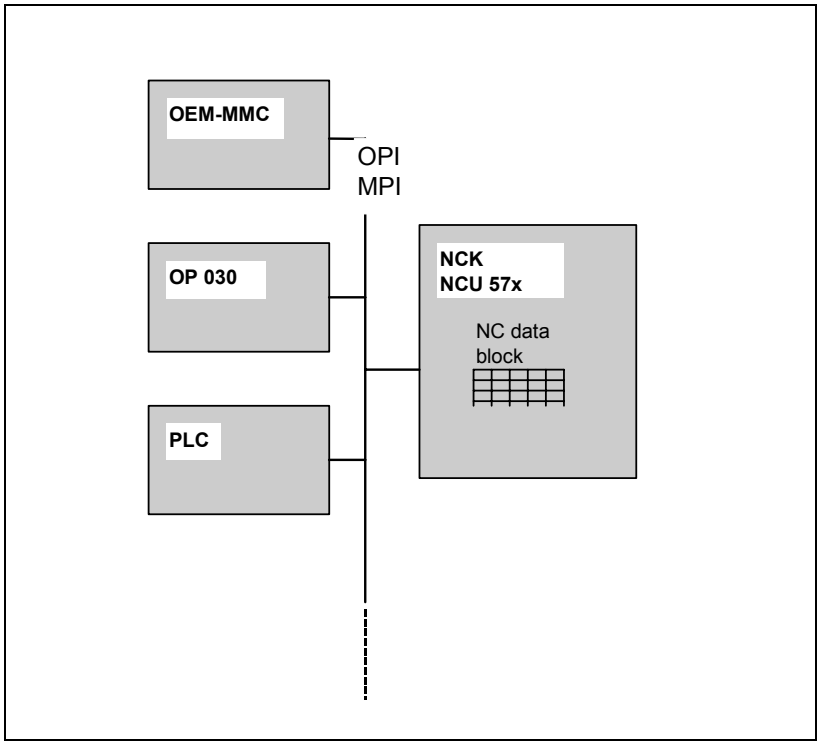


The components shown on the left-hand side of the diagram each have their own development environment which defines the syntax to be used. A variable is always addressed according to a defined pattern. All the information required for addressing the variables irrespective of the programming language chosen is summed up in the following lists.

© Siemens AG 2004 All Rights Reserved

## 3.1.1 General information

The NCK variables are stored in data modules that are assigned to the individual areas of the NCK as the figure below shows:

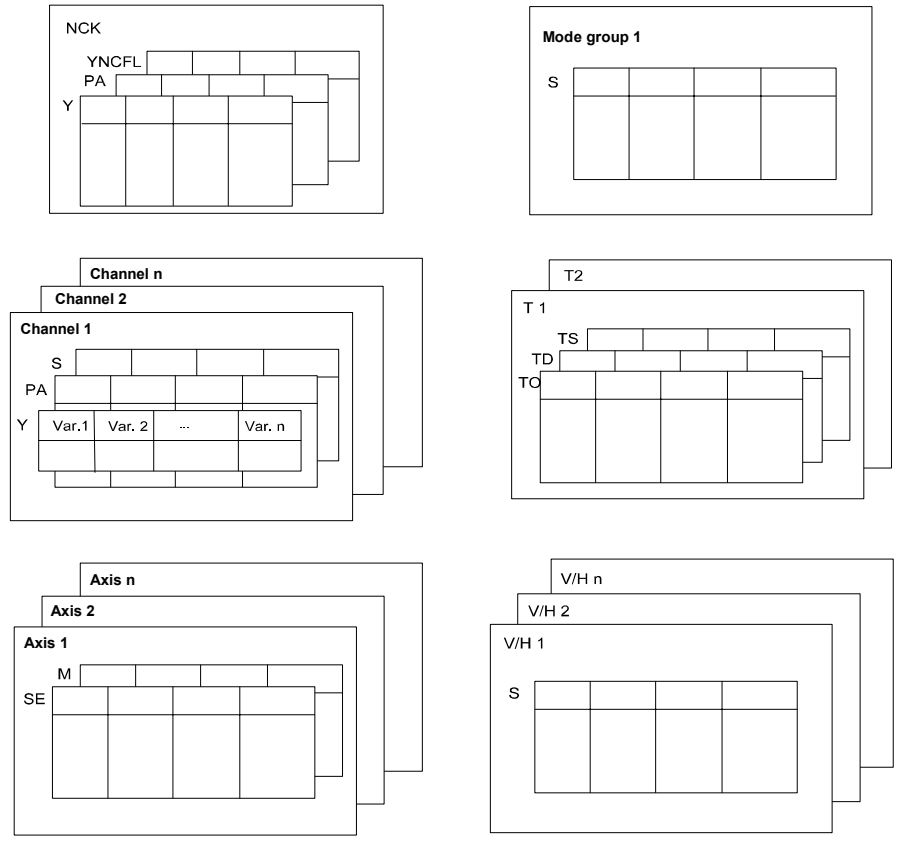


**Variable areas of SINUMERIK 840D/810D/FM-NC**

A distinction is made between the following areas:

- NCK (N)
- Mode group (B)
- Channel (C)
- Tool (T)
- Axis (A)
- Feed/main drive (V/H)

© Siemens AG 2004 All Rights Reserved

**NCK** Contains all the variables such as system data (Y), protection zones (PA), G groups (YNCFL) etc. that apply to the entire NCK.

**Mode group** Contains variables such as the status data (S) that apply to the mode group.

**Channel** Contains variables such as the system data (Y), protection zones (PA), global status data (S) etc. that apply to each channel.

**Tool** Contains variables such as the tool offset data (TO), general tool data (TD), tool monitoring data (TS) etc. that apply to the tools on the machine. Each tool area T is assigned to a channel.

**Axis** Contains the setting data and machine data that apply to each axis or spindle. For a description see Section "Axis-specific machine data".

**Feed / main drive** Contains machine data and machine data as the service values that apply to each drive. For a description see Section "Drive machine data".

## 3.1.2 Module types

The following table provides an overview of the modules for the variables of the NCK and how they are assigned to the individual areas.

Only the data modules whose variables can be read or written with direct access are contained in the list. Data modules whose variables can be defined by the programmer (e.g. global user data) are read by the MMC or PLC using other mechanisms. The documentation listed below describes the modules to which these mechanisms are applied:

**References:** /FBO/, Configuring the OP030 Operator Interface,
/FB/, P3, "Basic PLC Program" and
"OEM-MMC Description of Functions"

| Module | Area | | | | | | |
|---|---|---|---|---|---|---|---|
| | A | B | C | H | N | T | V |
| ETP | | | 1 | | | | |
| ETPD | | | | | 1 | | |
| DIAGN | | | 1 | | | | |
| FA | | | 1 | | 1 | | |
| FB | | | 1 | | 1 | | |
| FE | | | 1 | | | | |
| FU | | | 1 | | 1 | | |
| M | 1 | | | | 1 | | |
| NIB | | | 1 | | | | |
| PA | | | 1 | | 1 | | |
| RP | | | 1 | | | | |

© Siemens AG 2004 All Rights Reserved

| Module | Area | | | | | | |
|---|---|---|---|---|---|---|---|
| continued | A | B | C | H | N | T | V |
| S | | 1 | 1 | 1 | 1 | | 1 |
| SALA | | | | | 1 | | |
| SALAL | | | | | 1 | | |
| SALAP | | | | | 1 | | |
| SE | 1 | | 1 | | 1 | | |
| SEGA | | | 1 | | | | |
| SEMA | | | 1 | | 1 | | |
| SGA | | | 1 | | | | |
| SINF | | | 1 | | | | |
| SMA | | | 1 | | 1 | | |
| SNCF | | | 1 | | | | |
| SPARP | | | 1 | | | | |
| SPARPF | | | 1 | | | | |
| SPARPI | | | 1 | | | | |
| SPARPP | | | 1 | | | | |
| SSP | | | 1 | | 1 | | |
| SSP2 | | | 1 | | 1 | | |
| SSYNAC | | | 1 | | | | |
| SYNACT | | | 1 | | | | |
| TD | | | | | | 1 | |
| TF | | | | | | 1 | |
| TG | | | | | | 1 | |
| TM | | | | | | 1 | |
| TMC | | | | | | 1 | |
| TMV | | | | | | 1 | |
| TO | | | | | | 1 | |
| TP | | | | | | 1 | |
| TPM | | | | | | 1 | |
| TS | | | | | | 1 | |
| TT | | | | | | 1 | |
| TU | | | | | | 1 | |
| TUE | | | | | | 1 | |
| TUM | | | | | | 1 | |
| TUP | | | | | | 1 | |
| TUS | | | | | | 1 | |
| TV | | | | | | 1 | |
| AD | | | | | | 1 | |
| AEV | | | | | | 1 | |
| TC | | | | | | 1 | |
| TOE | | | | | | 1 | |
| TOET | | | | | | 1 | |
| TOS | | | | | | 1 | |
| TOST | | | | | | 1 | |
| TOT | | | | | | 1 | |
| VSYN | | | 1 | | | | |
| Y | | | 1 | | 1 | | |
| YNCFL | | | | | 1 | | |

© Siemens AG 2004 All Rights Reserved

### 3.1.3 Variable types

Within each area the variables are generally stored in the form of structures or in arrays of structures (tables). The following information must therefore be contained in an address when accessing a variable:

- Area + area number
- Module
- Variable name (or column number)
- Line number

It is generally possible to distinguish between three different variable types:

1. Variables that consist of 1 line
2. Variables that consist of several lines
3. Variables that consist of several columns and lines

**Single-line variables**

Each of these variables consists of a single value. The following information is required when accessing a variable of this type:

1. Area (and possibly area number)
2. Module
3. Variable name

| **numMachAxes** | | | | | |
|---|---|---|---|---|---|
| Number of existing machine axes | | | | | |
| - | | | | Word | r |
| Multi-line: no | | | | | |

Example for reading the number of machine axes in channel 1:

**MMC102:**

/Channel/Configuration/numMachAxes[u1]

**MMC100/OP030:**

P_C_Y_numMachAxes

**PLC with NC-Var-Selector:**

Area: C[.]

Module: Y

Variable: numMachAxes

Area No. = 1

© Siemens AG 2004 All Rights Reserved

**Multi-line variables**

These variables are defined as a one-dimensional field. When accessing a variable of this type the following information must be specified:

1. Area (and possibly area number)
2. Module
3. Variable name
4. Line number

| **actFeedRate** | $AA_VACTB[x] | | | | S5 |
|---|---|---|---|---|---|
| Axial feedrate actual value (only if axis is a positioning axis "spec" = 1) | | | | | |
| % | | | | Double | r |
| Multi-line:yes | Axis index | | numMachAxes | | |

Example for reading the current velocity of axis 3 in channel 1:

**MMC102:**

/Channel/MachineAxis/actFeedRate[u1, 3]

**MMC100/OP030:**

P_C_SEMA_actFeedRate

**PLC with NC-Var-Selector:**

Area: C[.]

Module: SEMA

Variable: actFeedRate[.]

Area No. = 1

Line = 3

**Multi-line and multi-column variables**

These variables are defined as a two-dimensional field. In order to access a variable of this type, the following information must be specified:

1. Area (and possibly area number)
2. Module
3. Variable name
4. Column number
5. Line number

In this case the entire data module only consists of this two-dimensional variable.

| **cuttEdgeParam** | $TC_DPx[y,z] | | | | |
|---|---|---|---|---|---|
| Offset value parameters for a cutting edge | | | | | |
| mm, inch or userdef | 0 | | | Double | wr |
| Multi-line:yes | (CuttEdgeNo 1) * numCuttEdgeParams + ParameterNo | | numCuttEdgeParams * numCuttEdges | | |

© Siemens AG 2004 All Rights Reserved

Example for reading the current cutting edge data of cutting edge 3/parameter 1 of tool 3 in T area 1: (in this example it is assumed that each tool cutting edge has been defined with (numCuttEdgeParams =) 25 parameters).

**MMC102:**

/Tool/Compensation/cuttEdgeParam[u1,c3, 51]

**MMC100/OP030:**

P_T_TO_cuttEdgeParam

**PLC with NC-Var-Selector:**

Area: T[.]

Module: TO

Variable: cuttEdgeParam[.]

Area No. = 1

Column = 3

Line = 51

## 3.1.4 Data types

The following data types are used in this description:

| Data type | Description |
|---|---|
| Bool | 1 bit |
| Character | 8 bits without sign |
| Byte | 8 bits with sign |
| Word | 16 bits without sign |
| Short Integer | 16 bits with sign |
| Doubleword | 32 bits without sign |
| Long Integer | 32 bits with sign |
| Float | 32 bits floating point |
| Double | 64 bits floating point |
| String | String ending in zero |

In the tables below the individual fields have the following meaning:

© Siemens AG 2004 All Rights Reserved

| **Variable name** | Reference to assigned MD | | | | Ref. |
|---|---|---|---|---|---|
| Variable brief description/<br>variable description<br>« Description of value range » | | | | | |
| Physical unit | Default value | Lower limit | Upper limit | Format /<br>field length | w / r |
| Multi-line:yes / no | Description of line index | | Maximum line index | | |

Ref. Cross-reference to references

w / r w Variable can be overwritten

r Variable can be read

© Siemens AG 2004 All Rights Reserved

# 3.2 System data

## 3.2.1 Area N, Mod. Y: Global system data

**OEM-MMC: Linkitem** /Nck/Configuration/...

The machine tool builder or user configures the control with the help of the machine data. Configuration can only be performed with certain access rights. The configuration of the NC can be read in the system data regardless of current access rights.

| **accessLevel** | | | | | |
|---|---|---|---|---|---|
| Level of the access rights currently set. Can be changed by entering the password or turning the keyswitch.<br>0 = access level SIEMENS<br>1 = access level machine tool builder<br>2 = access level system start-up engineer (machine tool builder)<br>3 = access level end user with password<br>4 = access level key switch 3<br>5 = access level key switch 2<br>6 = access level key switch 1<br>7 = access level key switch 0 | | | | | |
| - | | | | UWord | r |
| Multi-line: no | | | | | |

| **axisType** | | | | | |
|---|---|---|---|---|---|
| Axis types for all machine axes (necessary for start-up): If a machine axis is addressed via the M module, the units and values are returned with reference to the axis type accessible via this variable. (The absolute machine axis index 1-N_Y_maxnumGlobMachAxes is specified via the line index)<br>0 = Linear axis<br>1 = Rotary axis | | | | | |
| - | | | | UWord | r |
| Multi-line: yes | Absolute machine axis number | | maxnumGlobMachAxes | | |

| **basicLengthUnit** | | | | | |
|---|---|---|---|---|---|
| Global basic unit<br>0 = mm<br>1 = inch<br>4 = userdef | | | | | |
| - | | | | UWord | r |
| Multi-line: no | | | | | |

| **chanAssignment** | MD 10010: ASSIGN_CHAN_TO_MODE_GROUP[x] x=ChannelNo | | | | K1 |
|---|---|---|---|---|---|
| Assignment of each channel to mode group<br>0 = channel does not exist<br>n = channel assigned to mode group n (n is maximum numBAGs (BAG = mode group)) | | | | | |
| - | | | | UWord | r |
| Multi-line: yes | Channel number | | maxnumChannels | | |

© Siemens AG 2004 All Rights Reserved

| **externCncSystem** | $MN_EXTERN_LANGUAGE und $MN_EXTERN_CNC_SYSTEM | | | | |
|---|---|---|---|---|---|
| CNC system whose part programs must be processed on the SINUMERIK control.<br>0: No external language defined<br>1: System ISO Dialect0 Milling<br>2: System ISO Dialect0 Turning<br>etc. | | | | | |
| - | | | | UWord | r |
| Multi-line: yes | 1 | | 1 | | |

| **extraCuttEdgeParams** | | | | | |
|---|---|---|---|---|---|
| Bit string that specifies which TO edge parameters are available in addition to the 25 standard parameters.<br>Bit 0: Edge parameter no. 26 valid (ISO Dialect Milling H No.)<br>Bit 1: Edge parameter no. 27 valid<br>Bit 2: Edge parameter no. 28 valid<br>Bit 3: Edge parameter no. 29 valid<br>Bit 4: Edge parameter no. 30 valid<br>etc. | | | | | |
| - | | | | UWord | r |
| Multi-line: yes | 1 | | 1 | | |

| **kindOfSumcorr** | $MN_MM_KIND_OF_SUMCORR | | | | |
|---|---|---|---|---|---|
| Characteristics of total offsets in NCK:<br>Bit No. Value Meaning<br>0 0 Total offsets are saved at the same time as the tool data.<br>1 Total offsets are not saved at the same time as the tool data.<br>1 0 Setup offsets are saved at the same time as the tool data.<br>1 Setup offsets are not saved at the same time as the tool data.<br>2 0 If the "Tool management" function is in use: The existing total/setup offsets are not affected when tool status "active" is set.<br>1 When tool status "active" is set, the existing total offsets are set to zero. The setup offsets are not affected.<br>3 0 If the "Tool management" function plus "Adapter" is in use: Transformation of total offsets<br>1 No transformation of total offsets<br>4 0 No setup offset data sets<br>1 Setup offset data sets are created additionally, in which case the total offset equals the product of total offset + "fine total offset". | | | | | |
| - | | | | UWord | r |
| Multi-line: yes | 1 | | | | |

© Siemens AG 2004 All Rights Reserved

| **maskToolManagement** | $MN_MM_TOOL_MANAGEMENT_MASK | | | | |
|---|---|---|---|---|---|
| Settings for NCK tool management function<br>Activation of tool management memory with "0" means: The set tool management data do not occupy any memory space.<br>Bit 0=1: Memory for TM-specific data is made available<br>Bit 1=1: Memory for monitoring data is made available<br>Bit 2=1: Memory for user data (CC data) is made available<br>Bit 3=1: Memory for "Consider adjacent location" is made available<br>SW 5.1 and later:<br>Bit 5=0: Parameters and function for tool wear monitoring are not available.<br>Bit 5=1: Parameters and function for tool wear monitoring are available and, if bit 1 = 1, the wear monitoring function is also available.<br>Bit 6=0: The wear group function is not available; i.e. parameters $TC_MAMP3, $TC_MAP9 cannot be programmed, $TC_MPP5 is not defined for magazine locations of type 1.<br>Bit 6=1: The wear group function is available; i.e. parameters $TC_MAMP3, $TC_MAP9 can be programmed and wear groups defined. $TC_MPP5 contains the wear group number for location type 1.<br>Bit 7=1: Tool adapter data sets are available.<br>Bit 8=1: Total offsets are available.<br>Bit 9=1: Tools in a turret are handled in OPI variable modules such that they are not "displayed" in tool half-locations, but always displayed in a turret location. Please note, therefore, that tools in a turret remain (in display terms) in their turret location in the event of a tool change.<br>Bit 9=0: Default response; Tools in a turret are "displayed" in the OPI in their actual (according to data) location. | | | | | |
| - | 0 | | | Long Integer | r |
| Multi-line: yes | 1 | | | | |

| **maxCuttingEdgeNo** | $MN_MAX_CUTTING_EDGE_NO | | | | |
|---|---|---|---|---|---|
| Maximum value of D number<br>1 to 32000 | | | | | |
| - | 9 | 1 | 32000 | UWord | r |
| Multi-line: yes | 1 | | | | |

| **maxNumAdapter** | $MN_MM_NUM_TOOL_ADAPTER | | | | |
|---|---|---|---|---|---|
| Maximum number of tool adapter data sets available in NCK<br>>0: Maximum number of adapter data sets.<br>0: Adapter data cannot be defined. Edge-specific parameters $TC_DP21, $TC_DP22, $TC_DP23 are available, i.e. active tool management function with adapters is not in use.<br>-1: An adapter is automatically assigned to each magazine location, i.e. the number of adapters provided internally corresponds to the number of magazine locations set in machine data $MN_MM_NUM_MAGAZINE_LOCATION. | | | | | |
| - | 0 | -1 | 600 | Long Integer | r |
| Multi-line: yes | 1 | | | | |

| **maxnumAlarms** | | | | | |
|---|---|---|---|---|---|
| Size of NCK alarm buffer (maximum number of pending alarms) | | | | | |
| - | | | | UWord | r |
| Multi-line: no | | | | | |

| **maxnumChannels** | | | | | |
|---|---|---|---|---|---|
| Maximum number of available channels | | | | | |
| - | | | | UWord | r |
| Multi-line: no | | | | | |

| **maxnumContainer** | | | | | |
|---|---|---|---|---|---|
| Maximum number of available axis containers | | | | | |
| - | | 0 | | UWord | r |
| Multi-line: yes | 1 | | 1 | | |

| **maxnumContainerSlots** | | | | | |
|---|---|---|---|---|---|
| Maximum number of available slots per axis container | | | | | |
| - | | | | UWord | r |
| Multi-line: yes | 1 | | 1 | | |

© Siemens AG 2004 All Rights Reserved

| **maxnumCuttEdges_Tool** | $MN_MAX_CUTTING_EDGE_PER_TOOL | | | | |
|---|---|---|---|---|---|
| Max. number of edges per tool<br>1 to 12 | | | | | |
| - | 9 | | | UWord | r |
| Multi-line: yes | 1 | | | | |

| **maxnumDrives** | | | | | |
|---|---|---|---|---|---|
| Maximum number of available drives | | | | | |
| - | | | | UWord | r |
| Multi-line: no | | | | | |

| **maxnumEdgeSC** | $MN_MAX_SUMCORR_PERCUTTING_EDGE | | | | |
|---|---|---|---|---|---|
| Max. number of total offsets per edge<br>0 to 6 | | | | | |
| - | 0 ??? NCK | | | UWord | r |
| Multi-line: yes | 1 | | | | |

| **maxnumEventTypes** | | | | | |
|---|---|---|---|---|---|
| Maximum number of event types for the trace protocolling | | | | | |
| - | | | | UWord | r |
| Multi-line: no | | | | | |

| **maxnumGlobMachAxes** | | | | | |
|---|---|---|---|---|---|
| Maximum number of available machine axes | | | | | |
| - | | | | UWord | r |
| Multi-line: no | | | | | |

| **maxNumSumcorr** | $MN_MM_NUM_SUMCORR | | | | |
|---|---|---|---|---|---|
| Total number of total offsets in NCK<br>A setting of -1 means that the number of total offsets equals the number of edges * number of total offsets per edge.<br>A setting of > 0 and < number of edges * number of total offsets per edge means that a maximum number of total offsets equalling "number of total offsets per edge" can be defined per edge, but need not be, i.e. it is thus possible to use the buffer memory more economically.<br>In other words, only the edges have a total offset data set for which data can be defined explicitly. | | | | | |
| - | | | | Long Integer | r |
| Multi-line: yes | 1 | | | | |

| **maxnumTraceProtData** | | | | | |
|---|---|---|---|---|---|
| Maximum number of data per data list for trace protocolling | | | | | |
| - | | | | UWord | r |
| Multi-line: no | | | | | |

| **maxnumTraceProtDataList** | | | | | |
|---|---|---|---|---|---|
| Maximum number of data per data list for trace protocolling | | | | | |
| - | | | | UWord | r |
| Multi-line: no | | | | | |

© Siemens AG 2004 All Rights Reserved

| **modeSpindleToolRevolver** | MD $MN_MM_TOOL_MANAGEMENT_MASK Bit 9 | | | | |
|---|---|---|---|---|---|
| Representation of tool currently in use in modules<br>magazine location data (T / TP, magazine data, location data) and<br>tool data (T / TD, tool data, general data and T / TV, tool data, directory)<br>0: Previous method: During operation, the tool is removed (in data terms) from its circular magazine location and loaded to the spindle location in the buffer magazine.<br>1: During operation, the tool remains in its circular magazine locations in the OPI modules. This applies to OPI modules magazine location data (T / TP, magazine data and location data) and tool data (T / TD, tool data, general data and T / TV, tool data, directory and T / AEV, working offsets, directory). | | | | | |
| - | | | | UWord | r |
| Multi-line: yes | 1 | | | | |

| **nckLogbookSeekPos** | | | | | |
|---|---|---|---|---|---|
| NCK logbook | | | | | |
| - | | | | Long Integer | wr |
| Multi-line: no | | | 1 | | |

| **nckType** | | | | | |
|---|---|---|---|---|---|
| NCK type<br>0: 840D<br>1000: FM-NC<br>2000: 810D<br>3000: 802S (from SW 4.1)<br>4000: 802D | | | | | |
| - | | | | UWord | r |
| Multi-line: no | | | | | |

| **nckVersion** | | | | | |
|---|---|---|---|---|---|
| NCK version<br>Only the digits before the comma of the floating point number are evaluated, the digits after the comma may contain identifiers for development-internal intermediate releases.<br>The digits before the comma includes the official NCK identifier for the software release: For software release 3.4 the value of the variable is 34,.... | | | | | |
| - | | | | Double | r |
| Multi-line: no | | | | | |

| **ncuPerformanceClass** | | | | | |
|---|---|---|---|---|---|
| NCU power class<br>Not defined in SW 6.2.<br>0: No special power class<br>1: Powerline<br>2-n: Reserved | | | | | |
| - | 0 | 0 | | UWord | r |
| Multi-line: yes | 1 | | 1 | | |

| **numAnalogInp** | MD 10300: FASTIO_ANA_NUM_INPUTS | | | | A2 |
|---|---|---|---|---|---|
| Number of HW analog inputs | | | | | |
| - | | | | UWord | r |
| Multi-line: no | | | | | |

| **numAnalogOutp** | MD 10310: FASTIO_ANA_NUM_OUTPUTS | | | | A2 |
|---|---|---|---|---|---|
| Number of HW analog outputs | | | | | |
| - | | | | UWord | r |
| Multi-line: no | | | | | |

| **numBAGs** | | | | | |
|---|---|---|---|---|---|
| Number of available mode groups | | | | | |
| - | | | | UWord | r |
| Multi-line: no | | | | | |

© Siemens AG 2004 All Rights Reserved

| **numBasisFrames** | $MN_MM_NUM_GLOBAL_BASE_FRAMES | | | | |
|---|---|---|---|---|---|
| Number of channel-independent basic frames | | | | | |
| - | 0 | | | UWord | r |
| Multi-line: yes | 1 | | 1 | | |

| **numChannels** | | | | | |
|---|---|---|---|---|---|
| Number of active channels | | | | | |
| - | | | | UWord | r |
| Multi-line: no | | | | | |

| **numContainer** | | | | | |
|---|---|---|---|---|---|
| Number of currently available axis containers | | | | | |
| - | | 0 | maxnumContainer | UWord | r |
| Multi-line: yes | 1 | | 1 | | |

| **numContainerSlots** | | | | | |
|---|---|---|---|---|---|
| Number of currently available slots per axis container | | | | | |
| - | | | maxnumContainerSlots | UWord | r |
| Multi-line: yes | Index of axis container | | numContainer | | |

| **numCuttEdgeParams** | | | | | |
|---|---|---|---|---|---|
| Number of P elements of a cutting edge | | | | | |
| - | | | | UWord | r |
| Multi-line: no | | | | | |

| **numCuttEdgeParams_tao** | $MN_MM_NUM_CCS_TOA_PARAM | | | | |
|---|---|---|---|---|---|
| Number of Siemens application cutting edge data in module TAO<br>!! Reserved for SIEMENS applications !! | | | | | |
| - | 0 | 0 | 10 | UWord | r |
| Multi-line: yes | 1 | | 1 | | |

| **numCuttEdgeParams_tas** | $MN_MM_NUM_CCS_MON_PARAM | | | | |
|---|---|---|---|---|---|
| Number of Siemens application monitoring data in module TAS<br>!! Reserved for SIEMENS applications !! | | | | | |
| - | 0 | 0 | 10 | UDoubleword | r |
| Multi-line: yes | 1 | | 1 | | |

| **numCuttEdgeParams_ts** | | | | | |
|---|---|---|---|---|---|
| Number of P elements of a cutting edge in module TS (tool monitoring data) | | | | | |
| - | | | | UWord | r |
| Multi-line: no | | | | | |

| **numCuttEdgeParams_tu** | MD 18096: MM_CC_TOA_PARAM | | | | |
|---|---|---|---|---|---|
| Number of P elements of a cutting edge in module TUE (cutting edge data for OEM) | | | | | |
| - | | | | UWord | r |
| Multi-line: no | | | | | |

| **numCuttEdgeParams_tus** | $MN_MM_NUM_CC_MON_PARAM | | | | |
|---|---|---|---|---|---|
| Number of parameters in the user monitoring data of a cutting edge in the module TUS | | | | | |
| - | 0 | 0 | 10 | UWord | r |
| Multi-line: yes | 1 | | 1 | | |

© Siemens AG 2004 All Rights Reserved

| **numDigitInp** | MD 10350: FASTIO_DIG_NUM_INPUTS | | | | A2 |
|---|---|---|---|---|---|
| Number of HW digital inputs | | | | | |
| - | | | | UWord | r |
| Multi-line: no | | | | | |

| **numDigitOutp** | MD 10360: FASTIO_DIG_NUM_OUTPUTS | | | | A2 |
|---|---|---|---|---|---|
| Number of HW digital outputs | | | | | |
| - | | | | UWord | r |
| Multi-line: no | | | | | |

| **numDrives** | | | | | |
|---|---|---|---|---|---|
| Number of active drives | | | | | |
| - | | | | UWord | r |
| Multi-line: no | | | | | |

| **numGCodeGroups** | | | | | |
|---|---|---|---|---|---|
| Number of NC instruction groups | | | | | |
| - | | | | UWord | r |
| Multi-line: no | | | | | |

| **numGCodeGroupsFanuc** | | | | | |
|---|---|---|---|---|---|
| Number of NC instruction groups in ISO Dialect mode<br>(the number for the turning and milling versions is not the same) | | | | | |
| - | | | | UWord | r |
| Multi-line: yes | 1 | | 1 | | |

| **numGlobMachAxes** | | | | | |
|---|---|---|---|---|---|
| Number of active machine axes | | | | | |
| - | | | | UWord | r |
| Multi-line: no | | | | | |

| **numHandWheels** | | | | | |
|---|---|---|---|---|---|
| Maximum number of handwheels | | | | | |
| - | | | | UWord | r |
| Multi-line: no | | | | | |

| **numMagLocParams_tap** | $MN_MM_NUM_CCS_MAGLOC_PARAM | | | | |
|---|---|---|---|---|---|
| Number of Siemens application magazine location data in module TAP<br>!! Reserved for SIEMENS applications !! | | | | | |
| - | 0 | 0 | 10 | UDoubleword | r |
| Multi-line: yes | 1 | | 1 | | |

| **numMagLocParams_u** | $MN_MM_NUM_CC_MAGLOC_PARAM | | | | |
|---|---|---|---|---|---|
| Number of parameters of the magazine user data for a tool magazine place in the module TUP | | | | | |
| - | 0 | 0 | 10 | UWord | r |
| Multi-line: yes | 1 | | 1 | | |

| **numMagParams_tam** | $MN_MM_NUM_CCS_MAGAZINE_PARAM | | | | |
|---|---|---|---|---|---|
| Number of Siemens application magazine data in module TAM<br>!! Reserved for SIEMENS applications !! | | | | | |
| - | 0 | 0 | 10 | UDoubleword | r |
| Multi-line: yes | 1 | | 1 | | |

© Siemens AG 2004 All Rights Reserved

| **numMagParams_u** | $MN_MM_NUM_CC_MAGAZINE_PARAM | | | | |
|---|---|---|---|---|---|
| Number of parameters of the magazine user data for a tool magazine in the module TUM | | | | | |
| - | 0 | 0 | 10 | UWord | r |
| Multi-line: yes | 1 | | 1 | | |

| **numMagPlaceParams** | $TC_MPP1 | | | | |
|---|---|---|---|---|---|
| Number of parameters of a magazine location<br>8 in SW 5.1 and later | | | | | |
| - | | | | UWord | r |
| Multi-line: yes | 1 | | | | |

| **numMagPlacesMax** | MD 18086: MM_NUM_MAGAZINE_LOCATION | | | | FBW |
|---|---|---|---|---|---|
| Maximum number of magazine locations | | | | | |
| - | | | | UWord | r |
| Multi-line: no | | | | | |

| **numMagsMax** | MD 18084: MM_NUM_MAGAZINE | | | | FBW |
|---|---|---|---|---|---|
| Maximum number of magazines | | | | | |
| - | | | | UWord | r |
| Multi-line: no | | | | | |

| **numParams_Adapt** | | | | | |
|---|---|---|---|---|---|
| Number of parameters per adapter | | | | | |
| - | 4 | | | UWord | r |
| Multi-line: yes | 1 | | | | |

| **numParams_SC** | $TC_SCPx; x=13,...21,....71 | | | | |
|---|---|---|---|---|---|
| Number of total offset parameters per total offset set | | | | | |
| - | 9 | | | UWord | r |
| Multi-line: yes | 1 | | | | |

| **numPlaceMulti** | | | | | FBW |
|---|---|---|---|---|---|
| Number of possible multiple assignments of a location to magazines | | | | | |
| - | | | | UWord | r |
| Multi-line: no | | | | | |

| **numPlaceMultiParams** | | | | | FBW |
|---|---|---|---|---|---|
| Number of parameters of a multiple assignment | | | | | |
| - | | | | UWord | r |
| Multi-line: no | | | | | |

| **numToBaust** | MD 18110: MM_NUM_TOA_MODULES | | | | |
|---|---|---|---|---|---|
| Number of T areas | | | | | |
| - | | | | UWord | r |
| Multi-line: no | | | | | |

| **numToolHolderParams** | | | | | |
|---|---|---|---|---|---|
| Number of parameters in the data toolHolderData in the area C, module S<br>Number of parameters in toolHolderData.<br>If the tool magazine management is not active, the value =0 will be returned. | | | | | |
| - | 3 | 0 | | UWord | r |
| Multi-line: no | | | 1 | | |

© Siemens AG 2004 All Rights Reserved

| **numToolParams_tad** | $MN_MM_NUM_CCS_TDA_PARAM | | | | |
|---|---|---|---|---|---|
| Number of Siemens application tool data in module TAD<br>!! Reserved for SIEMENS applications !! | | | | | |
| - | 0 | 0 | 10 | UDoubleword | r |
| Multi-line: yes | 1 | | 1 | | |

| **numToolParams_tu** | MD 18094: MM_CC_TDA_PARAM | | | | |
|---|---|---|---|---|---|
| Number of P elements of a tool in module TU (tool data for OEM) | | | | | |
| - | | | | UWord | r |
| Multi-line: no | | | | | |

| **numUserFrames** | MN_MM_NUM_GLOBAL_USER_FRAMES | | | | |
|---|---|---|---|---|---|
| Number of channel-independent user frames | | | | | |
| - | 0 | | | UWord | r |
| Multi-line: yes | 1 | | 1 | | |

| **simo611dSupport** | | | | | |
|---|---|---|---|---|---|
| This data specifies the extent to which the system supports 611 drives.<br><br>Bit 0 set: NCK software supports 611D drives<br>Bit 1 set: Hardware supports 611D drives<br>(only if bit 0 is also set). | | | | | |
| - | 0 | 0 | | UWord | r |
| Multi-line: no | | | 1 | | |

| **toolChangeMfunc** | MD 22560: TOOL_CHANGE_M_CODE | | | | W1 |
|---|---|---|---|---|---|
| Number of M function for tool change<br>0 = change on T selection (standard for turning)<br>1 = change on selection M1..<br>99999 = change on selection M99999<br>(standard for milling M06) | | | | | |
| - | | | | Double | r |
| Multi-line: no | | | | | |

| **typeOfCuttingEdge** | | | | | |
|---|---|---|---|---|---|
| Type of D-number programming see MD: MM_TYPE_OF_CUTTING_EDGE<br>0 no 'flat D-number management' active<br>1 D-numbers are programmed directly and absolutely<br>2 D-numbers are programmed indirectly and relatively | | | | | |
| - | | | | UWord | r |
| Multi-line: yes | 1 | | 1 | | |

| **userScale** | | | | | |
|---|---|---|---|---|---|
| User unit table with 13 elements (see Start-up Guide 2.4 and machine data)<br>0 = table not active<br>1 = table active | | | | | |
| - | | | | UWord | r |
| Multi-line: no | | | 1 | | |

© Siemens AG 2004 All Rights Reserved

## 3.2.2 Area C, Mod. Y: Channel-specific system data

**OEM-MMC: Linkitem** /Channel/Configuration/...

The machine tool builder or user configures the control with the help of the machine data. Configuration can only be performed with certain access rights. The configuration of the NC can be read in the system data regardless of current access rights.

| **channelName** | MD 20000: CHAN_NAME | | | | K1 |
|---|---|---|---|---|---|
| Channel name | | | | | |
| - | | | | String[32] | r |
| Multi-line: no | | | | | |

© Siemens AG 2004 All Rights Reserved

| **maskToolManagement** | MC_TOOL_MANAGEMENT_MASK | | | | |
|---|---|---|---|---|---|
| Channel-specific settings for NCK tool management function<br>Activation of TM memory by "0" means: The set tool management data do not use any memory space.<br>Value=0: TM deactivated<br>Bit 0=1: TM active: The tool management functions are enabled for the current channel.<br>Bit 1=1: TM monitoring function active: Functions required to monitor tools (tool life and number of workpieces) are enabled.<br>Bit 2=1: OEM functions active: The memory for user data can be utilized.<br>Bit 3=1: Consideration of adjacent location active<br>Bits 0 to 3 must be set identically to machine data MM_TOOL_MANAGEMENT_MASK (18080).<br>Bit 4=1: The PLC has the possibility of issuing another request for tool change preparation with modified parameters.<br>----------For test purposes only :----------<br>Part program is halted in response to T selection or M06 until it has been acknowledged by the PLC program.<br>Bit 5=1: The main run/PLC synchronization in response to a tool change for the main spindle is executed simultaneously with the transport acknowledgement.<br>Bit 6=1: The main run/PLC synchronization in response to a tool change for the auxiliary spindle is executed simultaneously with the transport acknowledgement.<br>Bit 7=1: The main run/PLC synchronization in response to a tool change for the main spindle is not executed until the PLC acknowledgement confirms that the tool change is complete.<br>Bit 8=1: The main run/PLC synchronization in response to a tool change for the auxiliary spindle is not executed until the PLC acknowledgement confirms that the tool change is complete..<br>----------End For test purposes only :----------<br>Bit 9: Reserved<br>Bit 10=1: M06 is delayed until the preparation acknowledgement has been output by the PLC. The change signal (e.g. M06 ) is not output until the tool selection ( DBX [ n+0 ].2 ) has been acknowledged. The part program is halted in response to M06 until the T selection has been acknowledged.<br>Bit 11=1: The preparation command is output even if a preparation command has already been output for the same tool. This setting is useful, for example, if the chain is to be positioned when "Tx" is first called and if the second call is to initiate a check as to whether the tool is in the correct location for a tool change (e.g. in front of tool-change station).<br>Bit 12=1: The preparation command is executed even if the tool is already loaded in the spindle, i.e. the T selection signal (DB72.DBXn.2) is set even if it has already been set for the same tool. (Tx...Tx)<br>Bit 13=1: Only on systems with sufficient memory space (NCU572, NCU573): Recording of tool sequences in a diagnostics buffer. The commands are fetched from the diagnostics buffer in response to Reset and stored in a file in the passive file system, NCATR xx.MPF under part program. The trace file is useful for the Hotline in the event of errors and is not described in detail here.<br>Bit 14=1: Automatic tool change in response to Reset and Start according to machine data MD20120 TOOL_RESET_NAME MD20110 RESET_MODE_MASK MD20124 TOOL_MANAGEMENT_TOOLHOLDER. If machine data RESET_MODE_MASK is in use, then this bit must be set as well. If RESET_MODE_MASK is set such that the tool stored in TOOL_RESET_NAME must be loaded in response to RESET, then the select and change command is output to the user interface (DB 72) in response to RESET or Start. If machine data RESET_MODE_MASK is set such that the active tool must remain active after M30 or RESET and if the active tool is disabled in the spindle (by user), then a change command for a replacement tool is output to the user interface in response to RESET. If no replacement tool is available, then an error message is output.<br>Bit 15=1: No return transport of tool when several preparation commands are output. (Tx->Tx)<br>Bit 16=1: T location number is active<br>Bit 17=1: Tool life decrementation can be started/stopped via the PLC. | | | | | |
| - | 0 | | | Long Integer | r |
| Multi-line: yes | 1 | | | | |

| **mmcCmd** | | | | | |
|---|---|---|---|---|---|
| Command from NCK to MMC<br>The string is made up of the following characters:<br>1st Character acknowledgement mode:<br>"N" no acknowledgement<br>"S" synchronous acknowledgement<br>"A" asynchronous acknowledgement<br>2. - 6th character: five-digit sequence number in ASCII that is generated by the NCK<br>7. - 207th character: Command string which ends with "\0" | | | | | |
| - | | | | String[206] | r |
| Multi-line: no | | | | | |

© Siemens AG 2004 All Rights Reserved

| **mmcCmdPrep** | | | | | |
|---|---|---|---|---|---|
| Command from the NCK-preparation task to the MMC (e.g. for calling external subprograms) | | | | | |
| - | | | | String[206] | r |
| Multi-line: yes | 1 | | 1 | | |

| **mmcCmdQuit** | | | | | |
|---|---|---|---|---|---|
| Acknowledgement from MMC for command from NCK to MMC<br>The string is made up of the following characters:<br>1st Character acknowledgement code:<br>"P" programmed<br>"B" busy<br>"F" failed<br>"E" executed<br>2. - 6th character: five-digit sequence number in ASCII for acknowledgement code "B", "F" or "E", generated by NCK<br>7. - 201th character: additional communication-specific information for acknowledgement code "B", "F" or "E", ends with "\0" | | | | | |
| - | | | | String[200] | w |
| Multi-line: no | | | | | |

| **mmcCmdQuitPrep** | | | | | |
|---|---|---|---|---|---|
| Acknowledgemnt by MMC for an NCK-preparation command to the MMC (e.g. for calling external subprograms) | | | | | |
| - | | | | String[200] | wr |
| Multi-line: yes | 1 | | 1 | | |

| **numActAxes** | | | | | |
|---|---|---|---|---|---|
| Number of active tools in channel.<br>Channel axis gaps are not included in count which means that value might be lower than numMachAxes.<br>The following applies:<br>numMachAxes >= numGeoAxes + numAuxAxes<br>numActAxes = numGeoAxes + numAuxAxes | | | | | |
| - | 0 | 0 | numMachAxes | UWord | r |
| Multi-line: yes | 1 | | 1 | | |

| **numAuxAxes** | | | | | |
|---|---|---|---|---|---|
| Number of auxiliary axes | | | | | |
| - | | | | UWord | r |
| Multi-line: no | | | | | |

| **numBasisFrames** | $MC_MM_NUM_BASE_FRAMES | | | | |
|---|---|---|---|---|---|
| Number of basic frames in channel | | | | | |
| - | 0 | | | UWord | r |
| Multi-line: yes | 1 | | 1 | | |

| **numContourInProtArea** | | | | | |
|---|---|---|---|---|---|
| Maximum number of polygon elements per protection zone | | | | | |
| - | | | | UWord | r |
| Multi-line: no | | | | | |

| **numGeoAxes** | | | | | |
|---|---|---|---|---|---|
| Number of geometry axes and orientation axes | | | | | |
| - | | | | UWord | r |
| Multi-line: no | | | | | |

| **numMachAxes** | | | | | |
|---|---|---|---|---|---|
| No. of highest channel axis.<br>This also corresponds to the number of axes in the<br>channel provided there are no gaps in the axis sequence. | | | | | |
| - | 0 | 1 | | UWord | r |
| Multi-line: yes | 1 | | 1 | | |

© Siemens AG 2004 All Rights Reserved

| **numOriAxes** | | | | | |
|---|---|---|---|---|---|
| Number of orientation axes in channel | | | | | |
| - | 0 | | | UWord | r |
| Multi-line: yes | 1 | | 1 | | |

| **numProtArea** | MD 28200: MM_NUM_PROTECT_AREA_CHAN | | | | S7 |
|---|---|---|---|---|---|
| Maximum number of protection zones | | | | | |
| - | | | | UWord | r |
| Multi-line: no | | | | | |

| **numRParams** | MD 28050: MM_NUM_R_PARAM | | | | S7 |
|---|---|---|---|---|---|
| Number of channel-specific R parameters | | | | | |
| - | | | | UWord | r |
| Multi-line: no | | | | | |

| **numSpindles** | | | | | |
|---|---|---|---|---|---|
| Number of spindles | | | | | |
| - | | | | UWord | r |
| Multi-line: no | | | | | |

| **numSpindlesLog** | | | | | |
|---|---|---|---|---|---|
| Number of logical spindles.<br>Specifies the number of lines in module SSP2. | | | | | |
| - | | | | UWord | r |
| Multi-line: no | | | 1 | | |

| **numToolEdges** | MD 18100: MM_NUM_CUTTING_EDGES_IN_TOA | | | | S7 |
|---|---|---|---|---|---|
| Number of tool edges in this channel | | | | | |
| - | | | | UWord | r |
| Multi-line: no | | | | | |

| **numUserFrames** | MD 28080: MM_NUM_USER_FRAMES | | | | S7 |
|---|---|---|---|---|---|
| Number of user frames in this channel | | | | | |
| - | | | | UWord | r |
| Multi-line: no | | | | | |

| **oemProtText** | | | | | |
|---|---|---|---|---|---|
| OEM text to be entered next in the logging buffer. | | | | | |
| - | | | | String[128] | r |
| Multi-line: yes | 1 | | 1 | | |

| **progProtText** | | | | | |
|---|---|---|---|---|---|
| Programmable text to be entered next in the logging buffer | | | | | |
| - | | | | String[128] | r |
| Multi-line: yes | 1 | | 1 | | |

| **punchNibActivation** | MD 26012: PUNCHNIB_ACTIVATION | | | | N4 |
|---|---|---|---|---|---|
| Activation of punching and nibbling functions<br>0 = option not available<br>1 = option available | | | | | |
| - | | | | UWord | r |
| Multi-line: no | | | 1 | | |

© Siemens AG 2004 All Rights Reserved

| **systemFrameMask** | $MC_MM_SYSTEM_FRAME_MASK | | | | |
|---|---|---|---|---|---|
| Configuring screenform for channel-specific system frames<br>Indicates in bit-coded form which system frames are available | | | | | |
| - | 0 | 0 | | UWord | r |
| Multi-line: yes | 1 | | 1 | | |

| **toNo** | MD 28085: MM_LINK_TOA_UNIT | | | | W1 |
|---|---|---|---|---|---|
| Number of T area that is assigned to the channel | | | | | |
| - | | | | UWord | r |
| Multi-line: no | | | | | |

© Siemens AG 2004 All Rights Reserved

## 3.2.3 Area N, Mod. PA: Global protection zones

**OEM-MMC: Linkitem** /Nck/ProtectedArea/...

Up to 10 protection zones can be defined. Each protection zone is described by a polygon function consisting of up to 10 elements. The module PA contains the individual coordinates of the polygon elements. The protection zones are addressed via the variable indices. The physical unit of the parameters can be read from the variable "basicLengthUnit" in the module Y in area N.

The classification as NCK or channel-specific protection zones does not affect the protection zone monitoring function, but indicates the area in which the protection zone is registered.

| **MDD_PA_CENT_ABS_0** | $SN_PA_CENT_ABS[x,0] x = Number protection zone | | | | A3 |
|---|---|---|---|---|---|
| Absolute abscissa value of arc centre of 1st contour element | | | | | |
| mm, inch, user defined | | | | Double | r |
| Multi-line: yes | Number of protection zone | | numProtArea | | |

| **MDD_PA_CENT_ABS_1** | $SN_PA_CENT_ABS[x,1] x = Number protection zone | | | | A3 |
|---|---|---|---|---|---|
| Absolute abscissa value of arc centre of 2nd contour element | | | | | |
| mm, inch, user defined | | | | Double | r |
| Multi-line: yes | Number of protection zone | | numProtArea | | |

| **MDD_PA_CENT_ABS_2** | $SN_PA_CENT_ABS[x,2] x = Number protection zone | | | | A3 |
|---|---|---|---|---|---|
| Absolute abscissa value of arc centre of 3rd contour element | | | | | |
| mm, inch, user defined | | | | Double | r |
| Multi-line: yes | Number of protection zone | | numProtArea | | |

| **MDD_PA_CENT_ABS_3** | $SN_PA_CENT_ABS[x,3] x = Number protection zone | | | | A3 |
|---|---|---|---|---|---|
| Absolute abscissa value of arc centre of 4th contour element | | | | | |
| mm, inch, user defined | | | | Double | r |
| Multi-line: yes | Number of protection zone | | numProtArea | | |

| **MDD_PA_CENT_ABS_4** | $SN_PA_CENT_ABS[x,4] x = Number protection zone | | | | A3 |
|---|---|---|---|---|---|
| Absolute abscissa value of arc centre of 5th contour element | | | | | |
| mm, inch, user defined | | | | Double | r |
| Multi-line: yes | Number of protection zone | | numProtArea | | |

| **MDD_PA_CENT_ABS_5** | $SN_PA_CENT_ABS[x,5] x = Number protection zone | | | | A3 |
|---|---|---|---|---|---|
| Absolute abscissa value of arc centre of 6th contour element | | | | | |
| mm, inch, user defined | | | | Double | r |
| Multi-line: yes | Number of protection zone | | numProtArea | | |

| **MDD_PA_CENT_ABS_6** | $SN_PA_CENT_ABS[x,6] x = Number protection zone | | | | A3 |
|---|---|---|---|---|---|
| Absolute abscissa value of arc centre of 7th contour element | | | | | |
| mm, inch, user defined | | | | Double | r |
| Multi-line: yes | Number of protection zone | | numProtArea | | |

© Siemens AG 2004 All Rights Reserved

| **MDD_PA_CENT_ABS_7** | $SN_PA_CENT_ABS[x,7] x = Number protection zone | | | | A3 |
|---|---|---|---|---|---|
| Absolute abscissa value of arc centre of 8th contour element | | | | | |
| mm, inch, user defined | | | | Double | r |
| Multi-line: yes | Number of protection zone | | numProtArea | | |

| **MDD_PA_CENT_ABS_8** | $SN_PA_CENT_ABS[x,8] x = Number protection zone | | | | A3 |
|---|---|---|---|---|---|
| Absolute abscissa value of arc centre of 9th contour element | | | | | |
| mm, inch, user defined | | | | Double | r |
| Multi-line: yes | Number of protection zone | | numProtArea | | |

| **MDD_PA_CENT_ABS_9** | $SN_PA_CENT_ABS[x,9] x = Number protection zone | | | | A3 |
|---|---|---|---|---|---|
| Absolute abscissa value of arc centre of 10th contour element | | | | | |
| mm, inch, user defined | | | | Double | r |
| Multi-line: yes | Number of protection zone | | numProtArea | | |

| **MDD_PA_CENT_ORD_0** | $SN_PA_CENT_ORD[x,0] x = Number protection zone | | | | A3 |
|---|---|---|---|---|---|
| Absolute ordinate value of arc centre of 1st contour element | | | | | |
| mm, inch, user defined | | | | Double | r |
| Multi-line: yes | Number of protection zone | | numProtArea | | |

| **MDD_PA_CENT_ORD_1** | $SN_PA_CENT_ORD[x,1] x = Number protection zone | | | | A3 |
|---|---|---|---|---|---|
| Absolute ordinate value of arc centre of 2nd contour element | | | | | |
| mm, inch, user defined | | | | Double | r |
| Multi-line: yes | Number of protection zone | | numProtArea | | |

| **MDD_PA_CENT_ORD_2** | $SN_PA_CENT_ORD[x,2] x = Number protection zone | | | | A3 |
|---|---|---|---|---|---|
| Absolute ordinate value of arc centre of 3rd contour element | | | | | |
| mm, inch, user defined | | | | Double | r |
| Multi-line: yes | Number of protection zone | | numProtArea | | |

| **MDD_PA_CENT_ORD_3** | $SN_PA_CENT_ORD[x,3] x = Number protection zone | | | | A3 |
|---|---|---|---|---|---|
| Absolute ordinate value of arc centre of 4th contour element | | | | | |
| mm, inch, user defined | | | | Double | r |
| Multi-line: yes | Number of protection zone | | numProtArea | | |

| **MDD_PA_CENT_ORD_4** | $SN_PA_CENT_ORD[x,4] x = Number protection zone | | | | A3 |
|---|---|---|---|---|---|
| Absolute ordinate value of arc centre of 5th contour element | | | | | |
| mm, inch, user defined | | | | Double | r |
| Multi-line: yes | Number of protection zone | | numProtArea | | |

| **MDD_PA_CENT_ORD_5** | $SN_PA_CENT_ORD[x,5] x = Number protection zone | | | | A3 |
|---|---|---|---|---|---|
| Absolute ordinate value of arc centre of 6th contour element | | | | | |
| mm, inch, user defined | | | | Double | r |
| Multi-line: yes | Number of protection zone | | numProtArea | | |

| **MDD_PA_CENT_ORD_6** | $SN_PA_CENT_ORD[x,6] x = Number protection zone | | | | A3 |
|---|---|---|---|---|---|
| Absolute ordinate value of arc centre of 7th contour element | | | | | |
| mm, inch, user defined | | | | Double | r |
| Multi-line: yes | Number of protection zone | | numProtArea | | |

| **MDD_PA_CENT_ORD_7** | $SN_PA_CENT_ORD[x,7] x = Number protection zone | | | | A3 |
|---|---|---|---|---|---|
| Absolute ordinate value of arc centre of 8th contour element | | | | | |
| mm, inch, user defined | | | | Double | r |
| Multi-line: yes | Number of protection zone | | numProtArea | | |

© Siemens AG 2004 All Rights Reserved

| **MDD_PA_CENT_ORD_8** | $SN_PA_CENT_ORD[x,8] x = Number protection zone | | | | A3 |
|---|---|---|---|---|---|
| Absolute ordinate value of arc centre of 9th contour element | | | | | |
| mm, inch, user defined | | | | Double | r |
| Multi-line: yes | Number of protection zone | | numProtArea | | |

| **MDD_PA_CENT_ORD_9** | $SN_PA_CENT_ORD[x,9] x = Number protection zone | | | | A3 |
|---|---|---|---|---|---|
| Absolute ordinate value of arc centre of 10th contour element | | | | | |
| mm, inch, user defined | | | | Double | r |
| Multi-line: yes | Number of protection zone | | numProtArea | | |

| **MDD_PA_CONT_ABS_0** | $SN_PA_CONT_ABS[x,0] x = Number protection zone | | | | A3 |
|---|---|---|---|---|---|
| Absolute abscissa value of end point of 1st contour element | | | | | |
| mm, inch, user defined | | | | Double | r |
| Multi-line: yes | Number of protection zone | | numProtArea | | |

| **MDD_PA_CONT_ABS_1** | $SN_PA_CONT_ABS[x,1] x = Number protection zone | | | | A3 |
|---|---|---|---|---|---|
| Absolute abscissa value of end point of 2nd contour element | | | | | |
| mm, inch, user defined | | | | Double | r |
| Multi-line: yes | Number of protection zone | | numProtArea | | |

| **MDD_PA_CONT_ABS_2** | $SN_PA_CONT_ABS[x,2] x = Number protection zone | | | | A3 |
|---|---|---|---|---|---|
| Absolute abscissa value of end point of 3rd contour element | | | | | |
| mm, inch, user defined | | | | Double | r |
| Multi-line: yes | Number of protection zone | | numProtArea | | |

| **MDD_PA_CONT_ABS_3** | $SN_PA_CONT_ABS[x,3] x = Number protection zone | | | | A3 |
|---|---|---|---|---|---|
| Absolute abscissa value of end point of 4th contour element | | | | | |
| mm, inch, user defined | | | | Double | r |
| Multi-line: yes | Number of protection zone | | numProtArea | | |

| **MDD_PA_CONT_ABS_4** | $SN_PA_CONT_ABS[x,4] x = Number protection zone | | | | A3 |
|---|---|---|---|---|---|
| Absolute abscissa value of end point of 5th contour element | | | | | |
| mm, inch, user defined | | | | Double | r |
| Multi-line: yes | Number of protection zone | | numProtArea | | |

| **MDD_PA_CONT_ABS_5** | $SN_PA_CONT_ABS[x,5] x = Number protection zone | | | | A3 |
|---|---|---|---|---|---|
| Absolute abscissa value of end point of 6th contour element | | | | | |
| mm, inch, user defined | | | | Double | r |
| Multi-line: yes | Number of protection zone | | numProtArea | | |

| **MDD_PA_CONT_ABS_6** | $SN_PA_CONT_ABS[x,6] x = Number protection zone | | | | A3 |
|---|---|---|---|---|---|
| Absolute abscissa value of end point of 7th contour element | | | | | |
| mm, inch, user defined | | | | Double | r |
| Multi-line: yes | Number of protection zone | | numProtArea | | |

| **MDD_PA_CONT_ABS_7** | $SN_PA_CONT_ABS[x,7] x = Number protection zone | | | | A3 |
|---|---|---|---|---|---|
| Absolute abscissa value of end point of 8th contour element | | | | | |
| mm, inch, user defined | | | | Double | r |
| Multi-line: yes | Number of protection zone | | numProtArea | | |

| **MDD_PA_CONT_ABS_8** | $SN_PA_CONT_ABS[x,8] x = Number protection zone | | | | A3 |
|---|---|---|---|---|---|
| Absolute abscissa value of end point of 9th contour element | | | | | |
| mm, inch, user defined | | | | Double | r |
| Multi-line: yes | Number of protection zone | | numProtArea | | |

© Siemens AG 2004 All Rights Reserved

| **MDD_PA_CONT_ABS_9** | $SN_PA_CONT_ABS[x,9] x = Number protection zone | | | | A3 |
|---|---|---|---|---|---|
| Absolute abscissa value of end point of 10th contour element | | | | | |
| mm, inch, user defined | | | | Double | r |
| Multi-line: yes | Number of protection zone | | numProtArea | | |

| **MDD_PA_CONT_ORD_0** | $SN_PA_CONT_ORD[x,0] x = Number protection zone | | | | A3 |
|---|---|---|---|---|---|
| Absolute ordinate value of end point of 1st contour element | | | | | |
| mm, inch, user defined | | | | Double | r |
| Multi-line: yes | Number of protection zone | | numProtArea | | |

| **MDD_PA_CONT_ORD_1** | $SN_PA_CONT_ORD[x,1] x = Number protection zone | | | | A3 |
|---|---|---|---|---|---|
| Absolute ordinate value of end point of 2nd contour element | | | | | |
| mm, inch, user defined | | | | Double | r |
| Multi-line: yes | Number of protection zone | | numProtArea | | |

| **MDD_PA_CONT_ORD_2** | $SN_PA_CONT_ORD[x,2] x = Number protection zone | | | | A3 |
|---|---|---|---|---|---|
| Absolute ordinate value of end point of 3rd contour element | | | | | |
| mm, inch, user defined | | | | Double | r |
| Multi-line: yes | Number of protection zone | | numProtArea | | |

| **MDD_PA_CONT_ORD_3** | $SN_PA_CONT_ORD[x,3] x = Number protection zone | | | | A3 |
|---|---|---|---|---|---|
| Absolute ordinate value of end point of 4th contour element | | | | | |
| mm, inch, user defined | | | | Double | r |
| Multi-line: yes | Number of protection zone | | numProtArea | | |

| **MDD_PA_CONT_ORD_4** | $SN_PA_CONT_ORD[x,4] x = Number protection zone | | | | A3 |
|---|---|---|---|---|---|
| Absolute ordinate value of end point of 5th contour element | | | | | |
| mm, inch, user defined | | | | Double | r |
| Multi-line: yes | Number of protection zone | | numProtArea | | |

| **MDD_PA_CONT_ORD_5** | $SN_PA_CONT_ORD[x,5] x = Number protection zone | | | | A3 |
|---|---|---|---|---|---|
| Absolute ordinate value of end point of 6th contour element | | | | | |
| mm, inch, user defined | | | | Double | r |
| Multi-line: yes | Number of protection zone | | numProtArea | | |

| **MDD_PA_CONT_ORD_6** | $SN_PA_CONT_ORD[x,6] x = Number protection zone | | | | A3 |
|---|---|---|---|---|---|
| Absolute ordinate value of end point of 7th contour element | | | | | |
| mm, inch, user defined | | | | Double | r |
| Multi-line: yes | Number of protection zone | | numProtArea | | |

| **MDD_PA_CONT_ORD_7** | $SN_PA_CONT_ORD[x,7] x = Number protection zone | | | | A3 |
|---|---|---|---|---|---|
| Absolute ordinate value of end point of 8th contour element | | | | | |
| mm, inch, user defined | | | | Double | r |
| Multi-line: yes | Number of protection zone | | numProtArea | | |

| **MDD_PA_CONT_ORD_8** | $SN_PA_CONT_ORD[x,8] x = Number protection zone | | | | A3 |
|---|---|---|---|---|---|
| Absolute ordinate value of end point of 9th contour element | | | | | |
| mm, inch, user defined | | | | Double | r |
| Multi-line: yes | Number of protection zone | | numProtArea | | |

| **MDD_PA_CONT_ORD_9** | $SN_PA_CONT_ORD[x,9] x = Number protection zone | | | | A3 |
|---|---|---|---|---|---|
| Absolute ordinate value of end point of 10th contour element | | | | | |
| mm, inch, user defined | | | | Double | r |
| Multi-line: yes | Number of protection zone | | numProtArea | | |

© Siemens AG 2004 All Rights Reserved

| **MDD_PA_MINUS_LIM** | $SN_PA_MINUS_LIM[x] x = Number protection zone | | | | A3 |
|---|---|---|---|---|---|
| Limitation in the minus direction of the protection zone in the axis that is perpendicular to the polygon definition (applicate) | | | | | |
| mm, inch, user defined | | | | Double | r |
| Multi-line: yes | Number of protection zone | | numProtArea | | |

| **MDD_PA_PLUS_LIM** | $SN_PA_PLUS_LIM[x] x = Number protection zone | | | | A3 |
|---|---|---|---|---|---|
| Limitation in the plus direction of the protection zone in the axis that is perpendicular to the polygon definition (applicate) | | | | | |
| mm, inch, user defined | | | | Double | r |
| Multi-line: yes | Number of protection zone | | numProtArea | | |

| **MDU_PA_ACTIV_IMMED** | $SN_PA_ACTIV_IMMED[x] x = Number protection zone | | | | A3 |
|---|---|---|---|---|---|
| Code for "active immediately after referencing", i.e. the protection zone is active as soon as the control has been started up and the axes have been referenced<br>0 = protection zone is not active immediately<br>1 = protection zone is active immediately | | | | | |
| - | | | | UWord | r |
| Multi-line: yes | Number of protection zone | | numProtArea | | |

| **MDU_PA_CONT_NUM** | $SN_PA_CONT_NUM[x] x = Number protection zone | | | | A3 |
|---|---|---|---|---|---|
| Number of valid contour elements | | | | | |
| - | | 0 | numContourInProtArea | UWord | r |
| Multi-line: yes | Number of protection zone | | numProtArea | | |

| **MDU_PA_CONT_TYP_0** | $SN_PA_CONT_TYP[x,0] x = Number protection zone | | | | A3 |
|---|---|---|---|---|---|
| Contour type of 1st contour element<br>0 = G1<br>1 = G2<br>2 = G3 | | | | | |
| - | | | | UWord | r |
| Multi-line: yes | Number of protection zone | | numProtArea | | |

| **MDU_PA_CONT_TYP_1** | $SN_PA_CONT_TYP[x,1] x = Number protection zone | | | | A3 |
|---|---|---|---|---|---|
| Contour type of 2nd contour element<br>0 = G1<br>1 = G2<br>2 = G3 | | | | | |
| - | | | | UWord | r |
| Multi-line: yes | Number of protection zone | | numProtArea | | |

| **MDU_PA_CONT_TYP_2** | $SN_PA_CONT_TYP[x,2] x = Number protection zone | | | | A3 |
|---|---|---|---|---|---|
| Contour type of 3rd contour element<br>0 = G1<br>1 = G2<br>2 = G3 | | | | | |
| - | | | | UWord | r |
| Multi-line: yes | Number of protection zone | | numProtArea | | |

| **MDU_PA_CONT_TYP_3** | $SN_PA_CONT_TYP[x,3] x = Number protection zone | | | | A3 |
|---|---|---|---|---|---|
| Contour type of 4th contour element<br>0 = G1<br>1 = G2<br>2 = G3 | | | | | |
| - | | | | UWord | r |
| Multi-line: yes | Number of protection zone | | numProtArea | | |

© Siemens AG 2004 All Rights Reserved

| **MDU_PA_CONT_TYP_4** | $SN_PA_CONT_TYP[x,4] x = Number protection zone | | | | A3 |
|---|---|---|---|---|---|
| Contour type of 5th contour element<br>0 = G1<br>1 = G2<br>2 = G3 | | | | | |
| - | | | | UWord | r |
| Multi-line: yes | Number of protection zone | | numProtArea | | |

| **MDU_PA_CONT_TYP_5** | $SN_PA_CONT_TYP[x,5] x = Number protection zone | | | | A3 |
|---|---|---|---|---|---|
| Contour type of 6th contour element<br>0 = G1<br>1 = G2<br>2 = G3 | | | | | |
| - | | | | UWord | r |
| Multi-line: yes | Number of protection zone | | numProtArea | | |

| **MDU_PA_CONT_TYP_6** | $SN_PA_CONT_TYP[x,6] x = Number protection zone | | | | A3 |
|---|---|---|---|---|---|
| Contour type of 7th contour element<br>0 = G1<br>1 = G2<br>2 = G3 | | | | | |
| - | | | | UWord | r |
| Multi-line: yes | Number of protection zone | | numProtArea | | |

| **MDU_PA_CONT_TYP_7** | $SN_PA_CONT_TYP[x,7] x = Number protection zone | | | | A3 |
|---|---|---|---|---|---|
| Contour type of 8th contour element<br>0 = G1<br>1 = G2<br>2 = G3 | | | | | |
| - | | | | UWord | r |
| Multi-line: yes | Number of protection zone | | numProtArea | | |

| **MDU_PA_CONT_TYP_8** | $SN_PA_CONT_TYP[x,8] x = Number protection zone | | | | A3 |
|---|---|---|---|---|---|
| Contour type of 9th contour element<br>0 = G1<br>1 = G2<br>2 = G3 | | | | | |
| - | | | | UWord | r |
| Multi-line: yes | Number of protection zone | | numProtArea | | |

| **MDU_PA_CONT_TYP_9** | $SN_PA_CONT_TYP[x,9] x = Number protection zone | | | | A3 |
|---|---|---|---|---|---|
| Contour type of 10th contour element<br>0 = G1<br>1 = G2<br>2 = G3 | | | | | |
| - | | | | UWord | r |
| Multi-line: yes | Number of protection zone | | numProtArea | | |

| **MDU_PA_LIM_3DIM** | $SN_PA_LIM_3DIM[x] x = Number protection zone | | | | A3 |
|---|---|---|---|---|---|
| Code for limitation of protection zone in the axis that is perpendicular to polygon definition (applicate)<br>0 = no limitation<br>1 = limitation in positive direction<br>2 = limitation in negative direction<br>3 = limitation in both directions | | | | | |
| - | | | | UWord | r |
| Multi-line: yes | Number of protection zone | | numProtArea | | |

© Siemens AG 2004 All Rights Reserved

| **MDU_PA_ORI** | $SN_PA_ORI[x] x = Number protection zone | | | | A3 |
|---|---|---|---|---|---|
| Code for plane assignment of protection zone<br>0 = G17<br>1 = G18<br>2 = G19 | | | | | |
| - | | | | UWord | r |
| Multi-line: yes | Number of protection zone | | numProtArea | | |

| **MDU_PA_TW** | $SN_PA_T_W[x] x = Number protection zone | | | | A3 |
|---|---|---|---|---|---|
| Code for workpiece or tool-oriented protection zone<br>0 = workpiece-related<br>1 = reserved<br>2 = reserved<br>3 = tool-related | | | | | |
| - | | | | UWord | r |
| Multi-line: yes | Number of protection zone | | numProtArea | | |

© Siemens AG 2004 All Rights Reserved

## 3.2.4 Area C, Mod. PA: Channel-specific protection zones

**OEM-MMC: Linkitem** /Channel/ProtectedArea/...

Up to 10 protection zones can be defined. Each protection zone is described by a polygon function consisting of up to 10 elements. The maximum permissible number of protection zones is specified in "numProtArea" in the module Y in area C. The maximum permissible number of polygon definition elements is specified in "numContourInProtArea" in module Y in area C. Module PA contains the individual coordinates of the polygon elements. The protection zones are addressed via the variable indices.

The classification as NCK or channel-specific protection zone does not affect the protection zone monitoring function but simply indicates the area in which the protection zone is registered.

The physical unit actually used for length quantities is defined in "/C/SGA/extUnit" in module SGA in area C.

| **MDD_PA_CENT_ABS_0** | $SC_PA_CENT_ABS[x,0] x = Number protection zone | | | | A3 |
|---|---|---|---|---|---|
| Absolute abscissa value of arc centre of 1st contour element | | | | | |
| mm, inch, user defined | | | | Double | r |
| Multi-line: yes | Number of protection zone | | numProtArea | | |

| **MDD_PA_CENT_ABS_1** | $SC_PA_CENT_ABS[x,1] x = Number protection zone | | | | A3 |
|---|---|---|---|---|---|
| Absolute abscissa value of arc centre of 2nd contour element | | | | | |
| mm, inch, user defined | | | | Double | r |
| Multi-line: yes | Number of protection zone | | numProtArea | | |

| **MDD_PA_CENT_ABS_2** | $SC_PA_CENT_ABS[x,2] x = Number protection zone | | | | A3 |
|---|---|---|---|---|---|
| Absolute abscissa value of arc centre of 3rd contour element | | | | | |
| mm, inch, user defined | | | | Double | r |
| Multi-line: yes | Number of protection zone | | numProtArea | | |

| **MDD_PA_CENT_ABS_3** | $SC_PA_CENT_ABS[x,3] x = Number protection zone | | | | A3 |
|---|---|---|---|---|---|
| Absolute abscissa value of arc centre of 4th contour element | | | | | |
| mm, inch, user defined | | | | Double | r |
| Multi-line: yes | Number of protection zone | | numProtArea | | |

| **MDD_PA_CENT_ABS_4** | $SC_PA_CENT_ABS[x,4] x = Number protection zone | | | | A3 |
|---|---|---|---|---|---|
| Absolute abscissa value of arc centre of 5th contour element | | | | | |
| mm, inch, user defined | | | | Double | r |
| Multi-line: yes | Number of protection zone | | numProtArea | | |

| **MDD_PA_CENT_ABS_5** | $SC_PA_CENT_ABS[x,5] x = Number protection zone | | | | A3 |
|---|---|---|---|---|---|
| Absolute abscissa value of arc centre of 6th contour element | | | | | |
| mm, inch, user defined | | | | Double | r |
| Multi-line: yes | Number of protection zone | | numProtArea | | |

© Siemens AG 2004 All Rights Reserved

| **MDD_PA_CENT_ABS_6** | $SC_PA_CENT_ABS[x,6] x = Number protection zone | | | | A3 |
|---|---|---|---|---|---|
| Absolute abscissa value of arc centre of 7th contour element | | | | | |
| mm, inch, user defined | | | | Double | r |
| Multi-line: yes | Number of protection zone | | numProtArea | | |

| **MDD_PA_CENT_ABS_7** | $SC_PA_CENT_ABS[x,7] x = Number protection zone | | | | A3 |
|---|---|---|---|---|---|
| Absolute abscissa value of arc centre of 8th contour element | | | | | |
| mm, inch, user defined | | | | Double | r |
| Multi-line: yes | Number of protection zone | | numProtArea | | |

| **MDD_PA_CENT_ABS_8** | $SC_PA_CENT_ABS[x,8] x = Number protection zone | | | | A3 |
|---|---|---|---|---|---|
| Absolute abscissa value of arc centre of 9th contour element | | | | | |
| mm, inch, user defined | | | | Double | r |
| Multi-line: yes | Number of protection zone | | numProtArea | | |

| **MDD_PA_CENT_ABS_9** | $SC_PA_CENT_ABS[x,9] x = Number protection zone | | | | A3 |
|---|---|---|---|---|---|
| Absolute abscissa value of arc centre of 10th contour element | | | | | |
| mm, inch, user defined | | | | Double | r |
| Multi-line: yes | Number of protection zone | | numProtArea | | |

| **MDD_PA_CENT_ORD_0** | $SC_PA_CENT_ORD[x,0] x = Number protection zone | | | | A3 |
|---|---|---|---|---|---|
| Absolute ordinate value of arc centre of 1st contour element | | | | | |
| mm, inch, user defined | | | | Double | r |
| Multi-line: yes | Number of protection zone | | numProtArea | | |

| **MDD_PA_CENT_ORD_1** | $SC_PA_CENT_ORD[x,1] x = Number protection zone | | | | A3 |
|---|---|---|---|---|---|
| Absolute ordinate value of arc centre of 2nd contour element | | | | | |
| mm, inch, user defined | | | | Double | r |
| Multi-line: yes | Number of protection zone | | numProtArea | | |

| **MDD_PA_CENT_ORD_2** | $SC_PA_CENT_ORD[x,2] x = Number protection zone | | | | A3 |
|---|---|---|---|---|---|
| Absolute ordinate value of arc centre of 3rd contour element | | | | | |
| mm, inch, user defined | | | | Double | r |
| Multi-line: yes | Number of protection zone | | numProtArea | | |

| **MDD_PA_CENT_ORD_3** | $SC_PA_CENT_ORD[x,3] x = Number protection zone | | | | A3 |
|---|---|---|---|---|---|
| Absolute ordinate value of arc centre of 4th contour element | | | | | |
| mm, inch, user defined | | | | Double | r |
| Multi-line: yes | Number of protection zone | | numProtArea | | |

| **MDD_PA_CENT_ORD_4** | $SC_PA_CENT_ORD[x,4] x = Number protection zone | | | | A3 |
|---|---|---|---|---|---|
| Absolute ordinate value of arc centre of 5th contour element | | | | | |
| mm, inch, user defined | | | | Double | r |
| Multi-line: yes | Number of protection zone | | numProtArea | | |

| **MDD_PA_CENT_ORD_5** | $SC_PA_CENT_ORD[x,5] x = Number protection zone | | | | A3 |
|---|---|---|---|---|---|
| Absolute ordinate value of arc centre of 6th contour element | | | | | |
| mm, inch, user defined | | | | Double | r |
| Multi-line: yes | Number of protection zone | | numProtArea | | |

| **MDD_PA_CENT_ORD_6** | $SC_PA_CENT_ORD[x,6] x = Number protection zone | | | | A3 |
|---|---|---|---|---|---|
| Absolute ordinate value of arc centre of 7th contour element | | | | | |
| mm, inch, user defined | | | | Double | r |
| Multi-line: yes | Number of protection zone | | numProtArea | | |

© Siemens AG 2004 All Rights Reserved

| **MDD_PA_CENT_ORD_7** | $SC_PA_CENT_ORD[x,7] x = Number protection zone | | | | A3 |
|---|---|---|---|---|---|
| Absolute ordinate value of arc centre of 8th contour element | | | | | |
| mm, inch, user defined | | | | Double | r |
| Multi-line: yes | Number of protection zone | | numProtArea | | |

| **MDD_PA_CENT_ORD_8** | $SC_PA_CENT_ORD[x,8] x = Number protection zone | | | | A3 |
|---|---|---|---|---|---|
| Absolute ordinate value of arc centre of 9th contour element | | | | | |
| mm, inch, user defined | | | | Double | r |
| Multi-line: yes | Number of protection zone | | numProtArea | | |

| **MDD_PA_CENT_ORD_9** | $SC_PA_CENT_ORD[x,9] x = Number protection zone | | | | A3 |
|---|---|---|---|---|---|
| Absolute ordinate value of arc centre of 10th contour element | | | | | |
| mm, inch, user defined | | | | Double | r |
| Multi-line: yes | Number of protection zone | | numProtArea | | |

| **MDD_PA_CONT_ABS_0** | $SC_PA_CONT_ABS[x,0] x = Number protection zone | | | | A3 |
|---|---|---|---|---|---|
| Absolute abscissa value of end point of 1st contour element | | | | | |
| mm, inch, user defined | | | | Double | r |
| Multi-line: yes | Number of protection zone | | numProtArea | | |

| **MDD_PA_CONT_ABS_1** | $SC_PA_CONT_ABS[x,1] x = Number protection zone | | | | A3 |
|---|---|---|---|---|---|
| Absolute abscissa value of end point of 2nd contour element | | | | | |
| mm, inch, user defined | | | | Double | r |
| Multi-line: yes | Number of protection zone | | numProtArea | | |

| **MDD_PA_CONT_ABS_2** | $SC_PA_CONT_ABS[x,2] x = Number protection zone | | | | A3 |
|---|---|---|---|---|---|
| Absolute abscissa value of end point of 3rd contour element | | | | | |
| mm, inch, user defined | | | | Double | r |
| Multi-line: yes | Number of protection zone | | numProtArea | | |

| **MDD_PA_CONT_ABS_3** | $SC_PA_CONT_ABS[x,3] x = Number protection zone | | | | A3 |
|---|---|---|---|---|---|
| Absolute abscissa value of end point of 4th contour element | | | | | |
| mm, inch, user defined | | | | Double | r |
| Multi-line: yes | Number of protection zone | | numProtArea | | |

| **MDD_PA_CONT_ABS_4** | $SC_PA_CONT_ABS[x,4] x = Number protection zone | | | | A3 |
|---|---|---|---|---|---|
| Absolute abscissa value of end point of 5th contour element | | | | | |
| mm, inch, user defined | | | | Double | r |
| Multi-line: yes | Number of protection zone | | numProtArea | | |

| **MDD_PA_CONT_ABS_5** | $SC_PA_CONT_ABS[x,5] x = Number protection zone | | | | A3 |
|---|---|---|---|---|---|
| Absolute abscissa value of end point of 6th contour element | | | | | |
| mm, inch, user defined | | | | Double | r |
| Multi-line: yes | Number of protection zone | | numProtArea | | |

| **MDD_PA_CONT_ABS_6** | $SC_PA_CONT_ABS[x,6] x = Number protection zone | | | | A3 |
|---|---|---|---|---|---|
| Absolute abscissa value of end point of 7th contour element | | | | | |
| mm, inch, user defined | | | | Double | r |
| Multi-line: yes | Number of protection zone | | numProtArea | | |

| **MDD_PA_CONT_ABS_7** | $SC_PA_CONT_ABS[x,7] x = Number protection zone | | | | A3 |
|---|---|---|---|---|---|
| Absolute abscissa value of end point of 8th contour element | | | | | |
| mm, inch, user defined | | | | Double | r |
| Multi-line: yes | Number of protection zone | | numProtArea | | |

© Siemens AG 2004 All Rights Reserved

| **MDD_PA_CONT_ABS_8** | $SC_PA_CONT_ABS[x,8] x = Number protection zone | | | | A3 |
|---|---|---|---|---|---|
| Absolute abscissa value of end point of 9th contour element | | | | | |
| mm, inch, user defined | | | | Double | r |
| Multi-line: yes | Number of protection zone | | numProtArea | | |

| **MDD_PA_CONT_ABS_9** | $SC_PA_CONT_ABS[x,9] x = Number protection zone | | | | A3 |
|---|---|---|---|---|---|
| Absolute abscissa value of end point of 10th contour element | | | | | |
| mm, inch, user defined | | | | Double | r |
| Multi-line: yes | Number of protection zone | | numProtArea | | |

| **MDD_PA_CONT_ORD_0** | $SC_PA_CONT_ORD[x,0] x = Number protection zone | | | | A3 |
|---|---|---|---|---|---|
| Absolute ordinate value of end point of 1st contour element | | | | | |
| mm, inch, user defined | | | | Double | r |
| Multi-line: yes | Number of protection zone | | numProtArea | | |

| **MDD_PA_CONT_ORD_1** | $SC_PA_CONT_ORD[x,1] x = Number protection zone | | | | A3 |
|---|---|---|---|---|---|
| Absolute ordinate value of end point of 2nd contour element | | | | | |
| mm, inch, user defined | | | | Double | r |
| Multi-line: yes | Number of protection zone | | numProtArea | | |

| **MDD_PA_CONT_ORD_2** | $SC_PA_CONT_ORD[x,2] x = Number protection zone | | | | A3 |
|---|---|---|---|---|---|
| Absolute ordinate value of end point of 3rd contour element | | | | | |
| mm, inch, user defined | | | | Double | r |
| Multi-line: yes | Number of protection zone | | numProtArea | | |

| **MDD_PA_CONT_ORD_3** | $SC_PA_CONT_ORD[x,3] x = Number protection zone | | | | A3 |
|---|---|---|---|---|---|
| Absolute ordinate value of end point of 4th contour element | | | | | |
| mm, inch, user defined | | | | Double | r |
| Multi-line: yes | Number of protection zone | | numProtArea | | |

| **MDD_PA_CONT_ORD_4** | $SC_PA_CONT_ORD[x,4] x = Number protection zone | | | | A3 |
|---|---|---|---|---|---|
| Absolute ordinate value of end point of 5th contour element | | | | | |
| mm, inch, user defined | | | | Double | r |
| Multi-line: yes | Number of protection zone | | numProtArea | | |

| **MDD_PA_CONT_ORD_5** | $SC_PA_CONT_ORD[x,5] x = Number protection zone | | | | A3 |
|---|---|---|---|---|---|
| Absolute ordinate value of end point of 6th contour element | | | | | |
| mm, inch, user defined | | | | Double | r |
| Multi-line: yes | Number of protection zone | | numProtArea | | |

| **MDD_PA_CONT_ORD_6** | $SC_PA_CONT_ORD[x,6] x = Number protection zone | | | | A3 |
|---|---|---|---|---|---|
| Absolute ordinate value of end point of 7th contour element | | | | | |
| mm, inch, user defined | | | | Double | r |
| Multi-line: yes | Number of protection zone | | numProtArea | | |

| **MDD_PA_CONT_ORD_7** | $SC_PA_CONT_ORD[x,7] x = Number protection zone | | | | A3 |
|---|---|---|---|---|---|
| Absolute ordinate value of end point of 8th contour element | | | | | |
| mm, inch, user defined | | | | Double | r |
| Multi-line: yes | Number of protection zone | | numProtArea | | |

| **MDD_PA_CONT_ORD_8** | $SC_PA_CONT_ORD[x,8] x = Number protection zone | | | | A3 |
|---|---|---|---|---|---|
| Absolute ordinate value of end point of 9th contour element | | | | | |
| mm, inch, user defined | | | | Double | r |
| Multi-line: yes | Number of protection zone | | numProtArea | | |

© Siemens AG 2004 All Rights Reserved

| **MDD_PA_CONT_ORD_9** | $SC_PA_CONT_ORD[x,9] x = Number protection zone | | | | A3 |
|---|---|---|---|---|---|
| Absolute ordinate value of end point of 10th contour element | | | | | |
| mm, inch, user defined | | | | Double | r |
| Multi-line: yes | Number of protection zone | | numProtArea | | |

| **MDD_PA_MINUS_LIM** | $SC_PA_MINUS_LIM[x] x = Number protection zone | | | | A3 |
|---|---|---|---|---|---|
| Limitation in the minus direction of the protection zone in the axis that is perpendicular to the polygon definition (applicate) | | | | | |
| mm, inch, user defined | | | | Double | r |
| Multi-line: yes | Number of protection zone | | numProtArea | | |

| **MDD_PA_PLUS_LIM** | $SC_PA_PLUS_LIM[x] x = Number protection zone | | | | A3 |
|---|---|---|---|---|---|
| Limitation of the protection zone in the plus direction of the axis that is perpendicular to the polygon definition (applicate) | | | | | |
| mm, inch, user defined | | | | Double | r |
| Multi-line: yes | Number of protection zone | | numProtArea | | |

| **MDU_PA_ACTIV_IMMED** | $SC_PA_ACTIV_IMMED[x] x = Number protection zone | | | | A3 |
|---|---|---|---|---|---|
| Code for "active immediately after referencing", i.e. the protection zone is active as soon as the control has been started up and the axes have been referenced<br>0 = protection zone is not active immediately<br>1 = protection zone is active immediately | | | | | |
| - | | | | UWord | r |
| Multi-line: yes | Number of protection zone | | numProtArea | | |

| **MDU_PA_CONT_NUM** | $SC_PA_CONT_NUM[x] x = Number protection zone | | | | A3 |
|---|---|---|---|---|---|
| Number of valid contour elements | | | | | |
| - | | 0 | numContourInProtArea | UWord | r |
| Multi-line: yes | Number of protection zone | | numProtArea | | |

| **MDU_PA_CONT_TYP_0** | $SC_PA_CONT_TYP[x,0] x = Number protection zone | | | | A3 |
|---|---|---|---|---|---|
| Contour type of 1st contour element<br>0 = G1<br>1 = G2<br>2 = G3 | | | | | |
| - | | | | UWord | r |
| Multi-line: yes | Number of protection zone | | numProtArea | | |

| **MDU_PA_CONT_TYP_1** | $SC_PA_CONT_TYP[x,1] x = Number protection zone | | | | A3 |
|---|---|---|---|---|---|
| Contour type of 2nd contour element<br>0 = G1<br>1 = G2<br>2 = G3 | | | | | |
| - | | | | UWord | r |
| Multi-line: yes | Number of protection zone | | numProtArea | | |

| **MDU_PA_CONT_TYP_2** | $SC_PA_CONT_TYP[x,2] x = Number protection zone | | | | A3 |
|---|---|---|---|---|---|
| Contour type of 3rd contour element<br>0 = G1<br>1 = G2<br>2 = G3 | | | | | |
| - | | | | UWord | r |
| Multi-line: yes | Number of protection zone | | numProtArea | | |

© Siemens AG 2004 All Rights Reserved

| **MDU_PA_CONT_TYP_3** | $SC_PA_CONT_TYP[x,3] x = Number protection zone | | | | A3 |
|---|---|---|---|---|---|
| Contour type of 4th contour element<br>0 = G1<br>1 = G2<br>2 = G3 | | | | | |
| - | | | | UWord | r |
| Multi-line: yes | Number of protection zone | | numProtArea | | |

| **MDU_PA_CONT_TYP_4** | $SC_PA_CONT_TYP[x,4] x = Number protection zone | | | | A3 |
|---|---|---|---|---|---|
| Contour type of 5th contour element<br>0 = G1<br>1 = G2<br>2 = G3 | | | | | |
| - | | | | UWord | r |
| Multi-line: yes | Number of protection zone | | numProtArea | | |

| **MDU_PA_CONT_TYP_5** | $SC_PA_CONT_TYP[x,5] x = Number protection zone | | | | A3 |
|---|---|---|---|---|---|
| Contour type of 6th contour element<br>0 = G1<br>1 = G2<br>2 = G3 | | | | | |
| - | | | | UWord | r |
| Multi-line: yes | Number of protection zone | | numProtArea | | |

| **MDU_PA_CONT_TYP_6** | $SC_PA_CONT_TYP[x,6] x = Number protection zone | | | | A3 |
|---|---|---|---|---|---|
| Contour type of 7th contour element<br>0 = G1<br>1 = G2<br>2 = G3 | | | | | |
| - | | | | UWord | r |
| Multi-line: yes | Number of protection zone | | numProtArea | | |

| **MDU_PA_CONT_TYP_7** | $SC_PA_CONT_TYP[x,7] x = Number protection zone | | | | A3 |
|---|---|---|---|---|---|
| Contour type of 8th contour element<br>0 = G1<br>1 = G2<br>2 = G3 | | | | | |
| - | | | | UWord | r |
| Multi-line: yes | Number of protection zone | | numProtArea | | |

| **MDU_PA_CONT_TYP_8** | $SC_PA_CONT_TYP[x,8] x = Number protection zone | | | | A3 |
|---|---|---|---|---|---|
| Contour type of 9th contour element<br>0 = G1<br>1 = G2<br>2 = G3 | | | | | |
| - | | | | UWord | r |
| Multi-line: yes | Number of protection zone | | numProtArea | | |

| **MDU_PA_CONT_TYP_9** | $SC_PA_CONT_TYP[x,9] x = Number protection zone | | | | A3 |
|---|---|---|---|---|---|
| Contour type of 10th contour element<br>0 = G1<br>1 = G2<br>2 = G3 | | | | | |
| - | | | | UWord | r |
| Multi-line: yes | Number of protection zone | | numProtArea | | |

© Siemens AG 2004 All Rights Reserved

| **MDU_PA_LIM_3DIM** | $SC_PA_LIM_3DIM[x] x = Number protection zone | | | | A3 |
|---|---|---|---|---|---|
| Code for limitation of protection zone in the axis that is perpendicular to polygon definition (applicate)<br>0 = no limitation<br>1 = limitation in positive direction<br>2 = limitation in negative direction<br>3 = limitation in both directions | | | | | |
| - | | | | UWord | r |
| Multi-line: yes | Number of protection zone | | numProtArea | | |

| **MDU_PA_ORI** | $SC_PA_ORI[x] x = Number protection zone | | | | A3 |
|---|---|---|---|---|---|
| Code for plane assignment of protection zone<br>0 = G17<br>1 = G18<br>2 = G19 | | | | | |
| - | | | | UWord | r |
| Multi-line: yes | Number of protection zone | | numProtArea | | |

| **MDU_PA_TW** | $SC_PA_T_W[x] x = Number protection zone | | | | A3 |
|---|---|---|---|---|---|
| Code for workpiece or tool-oriented protection zone<br>0 = workpiece-related<br>1 = reserved<br>2 = reserved<br>3 = tool-related | | | | | |
| - | | | | UWord | r |
| Multi-line: yes | Number of protection zone | | numProtArea | | |

© Siemens AG 2004 All Rights Reserved

## 3.2.5 Area N, Mod. YNCFL: NCK instruction groups

**OEM-MMC: Linkitem** /Nck/FunctionGrouping/...

All G functions currently configured for the channels are made available for reading by the NCK. They are configured via machine data. Since the G functions are organized in groups, only one of which can be active at a time, this module is organized as a table.
There are two columns for each G group. The 1st column lists the number of G functions in a group (/N/YNCFL/Gruppe_NUM), this corresponds to the number of rows in each subsequent column. This second column contains all the G functions belonging to a group (/N/YNCFL/Gruppe).
As a result, the data for a certain G group are calculated via a column offset. The column offset of each variable is:
2 * (G group number - 1)

The number of G groups is given in the variable "numGCodeGroups" in area N / module Y. The resultant the maximum column offset of the variables is thus 2 * numGCodeGroups.

The G functions currently active are listed in area C / module SNCF.

| **Function** | | | | | |
|---|---|---|---|---|---|
| Instruction group<br><br>Attention: This variable is called "Gruppe" in the non-Windows MMC and the PLC ! | | | | | |
| - | | | | String[16] | r |
| Multi-line: yes | Serial number | | /N/YNCFL/GroupID | | |

| **GroupID** | | | | | |
|---|---|---|---|---|---|
| Number of G functions in each G group<br><br>Attention: This variable is called "Gruppe_NUM" in the non-Windows MMC and the PLC ! | | | | | |
| - | | | | UWord | r |
| Multi-line: yes | 1 | | 1 | | |

| **Gruppe** | | | | | |
|---|---|---|---|---|---|
| Instruction group<br>Attention: This variable is called "Function" in the MMC102 ! | | | | | |
| - | | | | String[16] | r |
| Multi-line: yes | Serial number | | /N/YNCFL/Gruppe_NUM | | |

| **Gruppe_NUM** | | | | | |
|---|---|---|---|---|---|
| Number of G functions in each G group<br>Attention: This variable is called "GroupID" in the MMC102 ! | | | | | |
| - | | | | UWord | r |
| Multi-line: yes | 1 | | 1 | | |

© Siemens AG 2004 All Rights Reserved

# 3.3 State data of system

## 3.3.1 Area N, Mod. S: Global state data

**OEM-MMC: Linkitem** /Nck/State/...

During NC operation different internal states occur and system-specific data may change during operation. To distinguish those from system variables, they are classified as state data.

A distinction is made between:
- NCK-specific state data
- Mode-group-specific state data
- Channel-specific state data
- Drive-specific state data (FDD)
- Drive-specific state data (MSD)

| **accIndex** | | | | | |
|---|---|---|---|---|---|
| Global upload starting point for ACC entries. If a value is set here, upload access to _N_xx_yyy_ACC modules starts from this entry. | | | | | |
| - | 1 | | | UWord | wr |
| Multi-line: no | | | | | |

| **aDbb** | $A_DBB[x] x = ByteNo | | | | |
|---|---|---|---|---|---|
| Data byte from/to the PLC<br>Can be written from SW 6.4. | | | | | |
| - | | | | UWord | wr |
| Multi-line: yes | Position offset within an I/O area | | | | |

| **aDbd** | $A_DBD[x] x = Offset | | | | |
|---|---|---|---|---|---|
| Data double word (32 bits) from/to the PLC<br>Can be written from SW 6.4. | | | | | |
| - | | | | Long Integer | wr |
| Multi-line: yes | Position offset within an I/O area. The offset refers to the byte, with the count beginning at 0. Permissible values for x are thus 0, 4, 8 etc. | | | | |

| **aDbr** | $A_DBR[x] x = Offset | | | | |
|---|---|---|---|---|---|
| Real data (32 bits) from/to the PLC<br>Can be written from SW 6.4. | | | | | |
| - | | | | Double | wr |
| Multi-line: yes | Position offset within an I/O area | | | | |

| **aDbw** | $A_DBW[x] x = Offset | | | | |
|---|---|---|---|---|---|
| Data word (16 bits) from/to the PLC<br>Can be written from SW 6.4. | | | | | |
| - | | | | UWord | wr |
| Multi-line: yes | Position offset within an I/O area | | | | |

© Siemens AG 2004 All Rights Reserved

| **aDlb** | $A_DLB[index] | | | | |
|---|---|---|---|---|---|
| Data byte (8 bits) in link area | | | | | |
| - | | | | UWord | wr |
| Multi-line: yes | Position offset within link data area | | | | |

| **aDld** | $A_DLD[index] | | | | |
|---|---|---|---|---|---|
| Data double word (32 bits) in link data area | | | | | |
| - | | | | UDoubleword | wr |
| Multi-line: yes | Position offset within link data area | | | | |

| **aDlr** | $A_DLR[index] | | | | |
|---|---|---|---|---|---|
| Read data (32 bits) in link data area | | | | | |
| - | | | | Double | wr |
| Multi-line: yes | Position offset within link area | | | | |

| **aDlw** | $A_DLW[index] | | | | |
|---|---|---|---|---|---|
| Data word (16 bits) in link data area | | | | | |
| - | | | | UWord | wr |
| Multi-line: yes | Position offset within link data area | | | | |

| **aInco** | $A_INCO[x] x = InputNo | | | | |
|---|---|---|---|---|---|
| Comperator input NC | | | | | |
| - | | | | UWord | r |
| Multi-line: yes | Input number | | 2 | | |

| **analogInpVal** | $A_INA[x] x = AnaloginputNo | | | | |
|---|---|---|---|---|---|
| Value of HW analog input | | | | | |
| A or V | | | | Double | r |
| Multi-line: yes | Number of analog input | | numAnalogInp | | |

| **analogOutpVal** | $A_OUTA[x] x = AnalogoutputNo | | | | |
|---|---|---|---|---|---|
| Number of HW analog output | | | | | |
| A or V | | | | Double | wr |
| Multi-line: yes | Number of analog output | | numAnalogOutp | | |

| **anAxCtAS** | $AN_AXCTAS[n] | | | | |
|---|---|---|---|---|---|
| Current container rotation, i.e. by how many slots the axis container has been currently advanced. The original container assignment is valid after Power On and outputs value 0. maxCount = max. number of occupied slots in axis container - 1 | | | | | |
| - | 0 | 0 | maxnumContainerSlots - 1 | UWord | r |
| Multi-line: yes | Container no. | | numContainer | | |

| **anAxCtSwA** | $AN_AXCTSWA[CTn] | | | | |
|---|---|---|---|---|---|
| A rotation is currently being executed on the axis container. | | | | | |
| - | 0 | 0 | 1 | UWord | r |
| Multi-line: yes | Container no. | | numContainer | | |

© Siemens AG 2004 All Rights Reserved

| **anAxEsrTrigger** | $AN_ESR_TRIGGER | | | | |
|---|---|---|---|---|---|
| (Global) control signal "Start Stop/Retract". With a signal edge change<br>from 0 to 1, the reactions parameterized beforehand in axial MD $MA_ESR_REACTION<br>and enabled via system variable $AA_ESR_ENABLE are started.<br>Independent drive reactions subsequently require a Power-Off / Power-On,<br>independent NC reactions require at least an opposite edge change in the<br>relevant system variable as well as a Reset.<br>0: FALSE<br>1: TRUE | | | | | |
| - | 0 | 0 | 1 | UWord | r |
| Multi-line: yes | 1 | | 1 | | |

| **anTimer** | $AN_TIMER[n] | | | | |
|---|---|---|---|---|---|
| Global NCK timer in seconds. | | | | | |
| s, user defined | 0 | 0 | | Double | r |
| Multi-line: yes | Index in $AN_TIMER[n] | | $MN_MM_NUM_AN_TIMER | | |

| **aPbbIn** | $A_PBB_IN[index] | | | | |
|---|---|---|---|---|---|
| Data byte (8bits) in PLC input/output area IN<br>(also available on 810D CCU2)<br>Neg. values are also permitted in spite of TYPE_UWORD | | | | | |
| - | | | | UWord | r |
| Multi-line: yes | Position offset within PLC input/output area | | | | |

| **aPbbOut** | $A_PBB_OUT[index] | | | | |
|---|---|---|---|---|---|
| Data byte (8 bits) in PLC input/output area OUT<br>(also available on 810D CCU2)<br>Can be written from SW 6.4.<br>Neg. values are also permitted in spite of TYPE_UWORD | | | | | |
| - | | | | UWord | wr |
| Multi-line: yes | Position offset within the PLC input/output area | | | | |

| **aPbdIn** | $A_PBD_IN[index] | | | | |
|---|---|---|---|---|---|
| Data double word (32bits) in PLC input/output area IN | | | | | |
| - | | | | UDoubleword | r |
| Multi-line: yes | Position offset within PLC input/output area | | | | |

| **aPbdOut** | $A_PBD_OUT[index] | | | | |
|---|---|---|---|---|---|
| Data double word (32 bits) in the PLC input/output area OUT<br>(also available on 810D CCU2)<br>Can be written from SW 6.4. | | | | | |
| - | | | | UDoubleword | wr |
| Multi-line: yes | Position offset within the PLC input/output area | | | | |

| **aPbrIn** | $A_PBR_IN[index] | | | | |
|---|---|---|---|---|---|
| Real data (32bits) in PLC input/output area IN<br>(also available on 810D CCU2) | | | | | |
| - | | | | Double | r |
| Multi-line: yes | Position offset within PLC input/output area | | | | |

© Siemens AG 2004 All Rights Reserved

| **aPbrOut** | $A_PBR_OUT[index] | | | | |
|---|---|---|---|---|---|
| Real data (32 bits) in the PLC input/output area OUT<br>(also available on 810D CCU2)<br>Can be written from SW 6.4. | | | | | |
| - | | | | Double | wr |
| Multi-line: yes | Position offset within the PLC input/output area | | | | |

| **aPbwIn** | $A_PBW_IN[index] | | | | |
|---|---|---|---|---|---|
| Data word (16bits) in PLC input/output area IN<br>(also available on 810D CCU2)<br>Neg. values are also permitted in spite of TYPE_UWORD | | | | | |
| - | | | | UWord | r |
| Multi-line: yes | Position offset within PLC input/output area | | | | |

| **aPbwOut** | $A_PBW_OUT[index] | | | | |
|---|---|---|---|---|---|
| Data word (16 bits) in the PLC input/output area OUT<br>(also available on 810D CCU2)<br>Can be written from SW 6.4.<br>Neg. values are also permitted in spite of TYPE_UWORD | | | | | |
| - | | | | UWord | wr |
| Multi-line: yes | Position offset within the PLC input/output area | | | | |

| **axisActivInNcu** | | | | | |
|---|---|---|---|---|---|
| Display indicating whether the axis is active, i.e. whether it can be traversed via a channel<br>of its own NCU or via another NCU (link axis).<br>This data can be utilized by MMCs in order to suppress the display of any non-active axes.<br><br>Bits 0-31 stand for the axes of the NCU.<br>Bit n = 1: Axis can be traversed.<br>Bit n = 0: Axis cannot be traversed. | | | | | |
| - | | | | UDoubleword | r |
| Multi-line: yes | 1 | | 1 | | |

| **badMemFfs** | | | | | |
|---|---|---|---|---|---|
| Number of bytes which are defective in the Flash File System (FFS) | | | | | |
| - | 0 | | | UDoubleword | r |
| Multi-line: yes | 1 | | 1 | | |

| **basisFrameMask** | $P_NCBFRMASK | | | | |
|---|---|---|---|---|---|
| Display indicating which channel-independent basic frames are active.<br>Each bit in the mask specifies whether the relevant basic frame<br>is active. Bit0 = 1st basic frame, Bit1 = 2nd basic frame etc. | | | | | |
| - | | | | UWord | r |
| Multi-line: yes | 1 | | 1 | | |

© Siemens AG 2004 All Rights Reserved

| **completeDocAcxChangeCnt** | | | | | |
|---|---|---|---|---|---|
| Modification counter of ACX for the configuration of<br>DO of all SINAMICS on all PROFIBUS segments (_N_COMPLETE_DOC_ACX) that is<br>incremented when the ACX is changed. If the contents of ACX<br>is or becomes invalid, the modification counter will be set to 0.<br>If the contents of ACX is valid again, the modification counter will<br>be reset to the value it had before the contents of ACX became invalid,<br>and will simultaneously be incremented (only the value), if the contents of<br>ACX has really changed.<br>== 0: Contents of _N_COMPLETE_DOC_ACX is invalid<br>!= 0: Contents of _N_COMPLETE_DOC_ACX is valid | | | | | |
| - | 0 | 0 | | UWord | r |
| Multi-line: no | | | 1 | | |

| **completeDotAcxChangeCnt** | | | | | |
|---|---|---|---|---|---|
| Modification counter of ACX that describes all<br>SINAMICS DO types known to the OPI (_N_COMPLETE_DOT_ACX) and that<br>is incremented when ACX changes. If the contents of ACX is or becomes<br>invalid, the modification counter will be set to 0.<br>If the contents of ACX is valid again, the modification counter will be<br>reset to the value it had before the contents of ACX became invalid and will<br>be incremented (only the value) simultaneously, if the contents of ACX has really changed.<br><br>== 0: Contents of _N_COMPLETE_DOT_ACX is invalid<br>!= 0: Contents of _N_COMPLETE_DOT_ACX is valid | | | | | |
| - | 0 | 0 | | UWord | r |
| Multi-line: no | | | 1 | | |

| **completeDpcAcxChangeCnt** | | | | | |
|---|---|---|---|---|---|
| Modification counter of ACX for the PROFIBUS configuration of<br>all PROFIBUS segments (_N_COMPLETE_DPC_ACX) that is<br>incremented when ACX is changed. If the contents of ACX<br>is or becomes invalid, the modification counter will be set to 0.<br>If the contents of ACX is valid again, the modification counter will<br>be reset to the value it had before the contents of ACX became invalid,<br>and will simultaneously be incremented (only the value), if the contents of<br>ACX has really changed.<br>== 0: Contents of _N_COMPLETE_DPC_ACX is invalid<br>!= 0: Contents of _N_COMPLETE_DPC_ACX is valid | | | | | |
| - | 0 | 0 | | UWord | r |
| Multi-line: no | | | 1 | | |

| **diagnoseDataFfs** | | | | | |
|---|---|---|---|---|---|
| Diagnostic data for Flash File System (FFS) | | | | | |
| - | 0 | | | Double | r |
| Multi-line: yes | 1: realspace (bytes)<br>2: formspace (bytes)<br>3: freespace (%)<br>4: delspace (%)<br>5: badspace (%)<br>6: actlowwater (%)<br>7: lowwater (%)<br>8: reorgmode (%) | | 8 | | |

| **digitInpVal** | $A_IN[x] x = DigitalinputNo | | | | |
|---|---|---|---|---|---|
| Value of HW digital input<br>0 = low<br>1 = high | | | | | |
| - | | | | UWord | r |
| Multi-line: yes | Number of digital input | | numDigitInp | | |

© Siemens AG 2004 All Rights Reserved

| **digitOutpVal** | $A_OUT[x] x = DigitaloutputNo | | | | |
|---|---|---|---|---|---|
| Value of HW digital output<br>0 = low<br>1 = high | | | | | |
| - | | | | UWord | wr |
| Multi-line: yes | Number of digital output | | numDigitOutp | | |

| **driveType** | | | | | |
|---|---|---|---|---|---|
| Digital drive type. Coded according to machine data 13040, but additional code.<br>Note:<br>As long as the OPI variable contains the identifier 0x100 "Drive type unknown" after an NCK ramp-up, the information is not yet consistent and must not be evaluated.<br>As soon as the identifier 0x100 is deleted, in NCU systems with SIMODRIVE 611D drives it can be assumed that the content can only change after renewed link to the NCK.<br>(e.g. after modification of the drive modules), i.e. it need not be cyclically checked for change.<br><br>0x100: Drive type unknown.<br>0x200: This identifier is entered in addition to the code according to the machine data 13040 if a 611D-Performance2 module is detected.<br>For other codes, see MD 13040. | | | | | |
| - | 0 | 0 | | UWord | r |
| Multi-line: no | | | maxnumDrives | | |

| **driveTypeChangeCnt** | | | | | |
|---|---|---|---|---|---|
| This counter is incremented by 1 every time driveType is modified.<br>The next value after 65535 is 0. | | | | | |
| - | 0 | 0 | | UWord | r |
| Multi-line: no | | | 1 | | |

| **freeDirectorys** | | | | | |
|---|---|---|---|---|---|
| Number of directories that can be created | | | | | |
| - | | | | UWord | r |
| Multi-line: yes | 1 | | 1 | | |

| **freeFiles** | | | | | |
|---|---|---|---|---|---|
| Number of files that can be created | | | | | |
| - | | | | UWord | r |
| Multi-line: yes | 1 | | 1 | | |

| **freeMem** | | | | | |
|---|---|---|---|---|---|
| Free SRAM in bytes | | | | | |
| - | | | | Long Integer | r |
| Multi-line: yes | 1 | | 1 | | |

| **freeMemDram** | | | | | |
|---|---|---|---|---|---|
| Free memory in bytes | | | | | |
| - | | | | Long Integer | r |
| Multi-line: yes | 1 | | 1 | | |

| **freeMemDram2PassF** | | | | | |
|---|---|---|---|---|---|
| Memory available in passive file system (DRAM no. 2) in bytes | | | | | |
| - | 0 | 0 | | UDoubleword | r |
| Multi-line: yes | 1 | | 1 | | |

© Siemens AG 2004 All Rights Reserved

| **freeMemDramPassF** | | | | | |
|---|---|---|---|---|---|
| Memory available in passive file system (DRAM no. 1) in bytes | | | | | |
| - | 0 | 0 | | UDoubleword | r |
| Multi-line: yes | 1 | | 1 | | |

| **freeMemFfs** | | | | | |
|---|---|---|---|---|---|
| Number of bytes that are still available in the Flash File System (FFS) | | | | | |
| - | 0 | | | UDoubleword | r |
| Multi-line: yes | 1 | | 1 | | |

| **freeMemSramPassF** | | | | | |
|---|---|---|---|---|---|
| Memory available in passive file system (SRAM) in bytes | | | | | |
| - | 0 | 0 | | UDoubleword | r |
| Multi-line: yes | 1 | | 1 | | |

| **freeProtokolFiles** | | | | | |
|---|---|---|---|---|---|
| Logging: Number of protocol files that can still be created | | | | | |
| - | 0 | 0 | 1 | UWord | r |
| Multi-line: yes | User no. (1-10) | | 10 | | |

| **hwMLFB** | | | | | |
|---|---|---|---|---|---|
| MLFB of the NCU module | | | | | |
| - | | | | String[24] | r |
| Multi-line: yes | 1 | | 1 | | |

| **hwProductSerialNr** | | | | | |
|---|---|---|---|---|---|
| Unique hardware number of the NCU module | | | | | |
| - | | | | String[16] | r |
| Multi-line: yes | 1 | | 1 | | |

| **hwProductSerialNrL** | | | | | |
|---|---|---|---|---|---|
| Unique hardware number of the NCU module | | | | | |
| - | | | | String[32] | r |
| Multi-line: yes | 1 | | 1 | | |

| **licenseStatus** | | | | | |
|---|---|---|---|---|---|
| Licensing status<br>0: Licensed,<br>1: Insufficiently licensed<br>2: Not licensed | | | | | |
| - | 0 | | | UWord | r |
| Multi-line: yes | 1 | | 1 | | |

| **mmcCmdPrepCounter** | | | | | |
|---|---|---|---|---|---|
| Counter that is incremented with each call of EXTCALL | | | | | |
| - | | | | UWord | r |
| Multi-line: yes | 1 | | 1 | | |

© Siemens AG 2004 All Rights Reserved

| **nckAliveAndWell** | DB10, DBX104.7 | | | | A4 |
|---|---|---|---|---|---|
| NCK sign-of-life<br>This value is incremented every time the variable is read which means that an<br>MMC can determine whether the NCK is still operating correctly by reading the variable<br>cyclically.<br>The value itself has no meaning.<br>Cyclic result acknowledgements in relation to this variable are generated even if the NCK<br>is otherwise no longer operating cyclic services owing to problems with block cycle times.<br>However, this response can be guaranteed only if the variable is not mixed with others in<br>one request, i.e. nckAliveAndWell must be the only variable linked to the cluster.<br>As long as a cyclic read service is set for this variable, one of the MMC-CPU-Ready signals<br>is set in the PLC interface.<br>Which of the signals is set is determined on the one hand by the line number and, on the other,<br>by the client's "gloports":<br>line index = 1 and gloports 0x20-0x2f --> DB10.DBX108 bit2 MMC1-CPU-Ready to MPI<br>line index = 1 and gloports 0x10-0x1f --> DB10.DBX108 bit3 MMC1-CPU-Ready to OPI<br>line index = 2 --> DB10.DBX108 bit1 MMC2-CPU-Ready<br>Note: The related NCK-CPU-Ready signal is stored in DB10,DBX104.7. | | | | | |
| - | | | | UWord | r |
| Multi-line: yes | MMC No. | | 2 (ab SW 5.2) | | |

| **ncuLinkActive** | | | | | |
|---|---|---|---|---|---|
| Display indicating whether NCU link is activated (via machine data setting)<br>Based on display, MMC decides whether link-specific calculations and<br>displays are required.<br>0: NCU link not activated<br>1: NCU link activated | | | | | |
| - | 0 | 0 | 1 | UWord | r |
| Multi-line: yes | 1 | | 1 | | |

| **nettoMemFfs** | | | | | |
|---|---|---|---|---|---|
| Net number of bytes which are available for the<br>Flash File System (FFS).<br>This memory stores the files contents and<br>management data (e.g. file names). | | | | | |
| - | 0 | | | UDoubleword | r |
| Multi-line: yes | 1 | | 1 | | |

| **numAlarms** | | | | | |
|---|---|---|---|---|---|
| Number of pending general alarms | | | | | |
| - | | | | UWord | r |
| Multi-line: no | | | | | |

| **numFilesPerDir** | | | | | |
|---|---|---|---|---|---|
| Maximum number of files per directory (see: $MN_MM_NUM_FILES_PER_DIR) | | | | | |
| - | | | | UWord | r |
| Multi-line: yes | 1 | | 1 | | |

| **numSubDirsPerDir** | | | | | |
|---|---|---|---|---|---|
| Maximum number of subdirectories per directory see: $MN_MM_NUM_SUBDIR_PER_DIR | | | | | |
| - | | | | UWord | r |
| Multi-line: yes | 1 | | 1 | | |

| **numTraceProtocDataList** | $MM_PROTOC_NUM_ETPD_STD_LIST | | | | |
|---|---|---|---|---|---|
| Logging: Number of standard data lists per user | | | | | |
| - | | 0 | | UWord | r |
| Multi-line: yes | User No. (1-10) | | 10 | | |

© Siemens AG 2004 All Rights Reserved

| **numTraceProtocOemDataList** | $MM_PROTOC_NUM_ETPD_OEM_LIST | | | | |
|---|---|---|---|---|---|
| Logging: Number of OEM data lists per user | | | | | |
| - | 0 | 0 | | UWord | r |
| Multi-line: yes | User No. (1-10) | | 10 | | |

| **protCnfgAutoLoad** | | | | | |
|---|---|---|---|---|---|
| Log: Controls automatic loading of the trace session<br>from the description file during the NCK start-up process<br>0: Automatic load is disabled<br>1: Load trace session from description file during NCK start-up<br>2: Same as (1), but cancel automatic load when stop trigger fires<br>3: Same as (1), but update the description file whenever the logging state changes | | | | | |
| - | 0 | 0 | 3 | UWord | wr |
| Multi-line: yes | User no. (1-10) | | 10 | | |

| **protCnfgAutoLoadFile** | | | | | |
|---|---|---|---|---|---|
| Log: Directory path and file name from which<br>the trace session is to be loaded during NCK start-up | | | | | |
| - | | | | String[64] | wr |
| Multi-line: yes | User no. (1-10) | | 10 | | |

| **protCnfgAutoSave** | | | | | |
|---|---|---|---|---|---|
| Log: Automatically save the trace session into a description file<br>0: Automatic save is disabled<br>1: Save the trace session to a description file whenever data logging is terminated<br>2: Save the trace session and diagnostic information to a description file whenever data logging is terminated | | | | | |
| - | 0 | 0 | 2 | UWord | wr |
| Multi-line: yes | User no. (1-10) | | 10 | | |

| **protCnfgCtl** | | | | | |
|---|---|---|---|---|---|
| Log: Control word to manipulate the trace session description file<br>0: Do nothing<br>1: Save the trace session into a description file<br>2: Save the trace session with diagnostic information into a description file<br>3: Load the trace session from a description file and reset all active triggers to the armed state<br>4: Load the trace session from a description file with the saved trigger states<br>5: Delete the trace session description file | | | | | |
| - | 0 | 0 | 5 | UWord | wr |
| Multi-line: yes | User no. (1-10) | | 10 | | |

| **protCnfgFilename** | | | | | |
|---|---|---|---|---|---|
| Log: Directory path and file name of the<br>session description file that is managed by protCnfgCtl | | | | | |
| - | | | | String[64] | wr |
| Multi-line: yes | User no. (1-10) | | 10 | | |

| **protCnfgStat** | | | | | |
|---|---|---|---|---|---|
| Log: Result from the most recent save or load of a description file<br>0: No Error | | | | | |
| - | 0 | | | UWord | wr |
| Multi-line: yes | User no. (1-10) | | 10 | | |

| **protocLastValNetIpoCycle** | | | | | |
|---|---|---|---|---|---|
| Logging: Runtime of all events of all channels of a user in the last IPO cycle | | | | | |
| - | 0 | 0 | | Double | r |
| Multi-line: yes | User no. (1-10) | | 10 | | |

© Siemens AG 2004 All Rights Reserved

| protocMaxValNetIpoCycle | | | | | |
|---|---|---|---|---|---|
| Logging: Maximum run time of all events of all channels of a user | | | | | |
| - | 0 | 0 | | Double | wr |
| Multi-line: yes | User no. (1-10) | | 10 | | |

| protocStrtMaskInt16 | | | | | |
|---|---|---|---|---|---|
| Logging: Integer 16 bit screen form with which the start trigger variable is logically AND-ed before the comparison is made with the trigger value. There is no logic operation with the value 0. | | | | | |
| - | 0 | 0 | | UWord | wr |
| Multi-line: yes | User no. (1-10) | | 10 | | |

| protocStrtMaskInt32 | | | | | |
|---|---|---|---|---|---|
| Logging: Integer 32 bit screen form with which the start trigger variable is logically AND-ed before the comparison is made with the trigger value. There is no logic operation with the value 0. | | | | | |
| - | 0 | 0 | | UDoubleword | wr |
| Multi-line: yes | User no. (1-10) | | 10 | | |

| protocStrtMatchCount | | | | | |
|---|---|---|---|---|---|
| Logging: Specifies how often the comparison must match before the start trigger fires. | | | | | |
| - | 0 | 0 | | UWord | wr |
| Multi-line: yes | User no. (1-10) | | 10 | | |

| protocStrtNumEvDelay | | | | | |
|---|---|---|---|---|---|
| Logging: Number of events which are still to be omitted after the occurrence of the trigger event before logging is started. | | | | | |
| - | 0 | 0 | | UWord | wr |
| Multi-line: yes | User no. (1-10) | | 10 | | |

| protocStrtRemMatchCount | | | | | |
|---|---|---|---|---|---|
| Logging: Specifies how often the comparison still has to match before the start trigger fires. | | | | | |
| - | 0 | 0 | | UWord | r |
| Multi-line: yes | User no. (1-10) | | 10 | | |

| protocStrtState | | | | | |
|---|---|---|---|---|---|
| Logging: Status of the start triggering<br>0: Passive (trigger inactive)<br>1: Active (trigger is active, but has not yet responded)<br>2: Delay (trigger has responded and is still waiting the delay time)<br>3: Firing (trigger has responded, but must still respond more frequently until the triggering takes place)<br>4: Done (trigger has responded and is inactive) | | | | | |
| - | 0 | 0 | | UWord | wr |
| Multi-line: yes | User no. (1-10) | | 10 | | |

| protocStrtType | | | | | |
|---|---|---|---|---|---|
| Logging: Type of start triggering<br>0: Monitoring for equality<br>1: Monitoring for more than or equal to<br>2: Monitoring for greater than<br>3: Monitoring for less than or equal to<br>4: Monitoring for less than<br>5: Monitoring for inequality<br>6: Monitoring for value change<br>7: Monitoring for increasing values<br>8: Monitoring for falling values | | | | | |
| - | 0 | 0 | | UWord | wr |
| Multi-line: yes | User no. (1-10) | | 10 | | |

© Siemens AG 2004 All Rights Reserved

| **protocStrtValueInt16** | | | | | |
|---|---|---|---|---|---|
| Logging: Integer 16 bit value with which the start trigger variable is to be compared | | | | | |
| - | 0 | 0 | | UWord | wr |
| Multi-line: yes | User no. (1-10) | | 10 | | |

| **protocStrtValueInt32** | | | | | |
|---|---|---|---|---|---|
| Logging: Integer 32 bit value with which the start trigger variable is to be compared | | | | | |
| - | 0 | 0 | | UDoubleword | wr |
| Multi-line: yes | User no. (1-10) | | 10 | | |

| **protocStrtValueReal32** | | | | | |
|---|---|---|---|---|---|
| Logging: Real 32 bit value with which the start trigger variable is to be compared | | | | | |
| - | 0 | 0 | | Float | wr |
| Multi-line: yes | User no. (1-10) | | 10 | | |

| **protocStrtValueReal64** | | | | | |
|---|---|---|---|---|---|
| Logging: Real 64 bit value with which the start trigger variable is to be compared | | | | | |
| - | 0 | 0 | | Double | wr |
| Multi-line: yes | User no. (1-10) | | 10 | | |

| **protocStrtVarCol** | | | | | |
|---|---|---|---|---|---|
| Logging: Variable which is to be monitored for the start triggering.<br>Statement of the "Col" | | | | | |
| - | 0 | 0 | | UWord | wr |
| Multi-line: yes | User no. (1-10) | | 10 | | |

| **protocStrtVarRow** | | | | | |
|---|---|---|---|---|---|
| Logging: Variable which is to be monitored for the start triggering.<br>Statement of the "Row" | | | | | |
| - | 0 | 0 | | UWord | wr |
| Multi-line: yes | User no. (1-10) | | 10 | | |

| **protocStrtVarType** | | | | | |
|---|---|---|---|---|---|
| Logging: Variable which is to be monitored for the start triggering.<br>Statement of the "Type" | | | | | |
| - | 0 | 0 | | UWord | wr |
| Multi-line: yes | User no. (1-10) | | 10 | | |

| **protocStrtVarUnit** | | | | | |
|---|---|---|---|---|---|
| Logging: Variable which is to be monitored for the start triggering.<br>Statement of the "Unit". | | | | | |
| - | 0 | 0 | | UWord | wr |
| Multi-line: yes | User no. (1-10) | | 10 | | |

| **protocTrigMaskInt16** | | | | | |
|---|---|---|---|---|---|
| Logging: Integer 16-bit mask with which the trigger variable is logically<br>ANDed before the comparison with the trigger value is made.<br>Variable is not ANDed if value is 0. | | | | | |
| - | 0 | 0 | | UWord | wr |
| Multi-line: yes | User No. (1-10) | | 10 | | |

| **protocTrigMaskInt32** | | | | | |
|---|---|---|---|---|---|
| Logging: Integer 32-bit mask with which the trigger variable is logically<br>ANDed before the comparison with the trigger value is made.<br>Variable is not ANDed if value is 0. | | | | | |
| - | 0 | 0 | | UDoubleword | wr |
| Multi-line: yes | User No. (1-10) | | 10 | | |

© Siemens AG 2004 All Rights Reserved

| **protocTrigMatchCount** | | | | | |
|---|---|---|---|---|---|
| Logging: Specifies how often the comparison must match before the trigger fires. | | | | | |
| - | 0 | 0 | | UWord | wr |
| Multi-line: yes | User no. (1-10) | | 10 | | |

| **protocTrigNumEvDelay** | | | | | |
|---|---|---|---|---|---|
| Logging: Number of events to be recorded after the trigger event has occurred before the logging operation is stopped. | | | | | |
| - | 0 | 0 | | UWord | wr |
| Multi-line: yes | User No. (1-10) | | 10 | | |

| **protocTrigRemMatchCount** | | | | | |
|---|---|---|---|---|---|
| Logging: Specifies how often the comparison still has to match before the trigger fires. | | | | | |
| - | 0 | 0 | | UWord | r |
| Multi-line: yes | User no. (1-10) | | 10 | | |

| **protocTrigState** | | | | | |
|---|---|---|---|---|---|
| Logging: Triggering status<br>0: Passive (trigger not active)<br>1: Active (trigger is active, but has not yet responded)<br>2: Delay (trigger has responded and is waiting for delay)<br>3: Firing (trigger has responded, but must still respond more frequently until the triggering takes place)<br>4: Done (trigger has responded and is inactive) | | | | | |
| - | 0 | 0 | | UWord | wr |
| Multi-line: yes | User No. (1-10) | | 10 | | |

| **protocTrigType** | | | | | |
|---|---|---|---|---|---|
| Logging: Triggering method<br>0: Monitor for equals<br>1: Monitor for greater than/equal to<br>2: Monitor for greater than<br>3: Monitor for less than/equal to<br>4: Monitor for less than<br>5: Monitoring for inequality<br>6: Monitoring for value change<br>7: Monitoring for increasing values<br>8: Monitoring for falling values | | | | | |
| - | 0 | 0 | | UWord | wr |
| Multi-line: yes | User No. (1-10) | | 10 | | |

| **protocTrigValueInt16** | | | | | |
|---|---|---|---|---|---|
| Logging: Integer 16-bit value with which trigger variable must be compared | | | | | |
| - | 0 | 0 | | UWord | wr |
| Multi-line: yes | User No. (1-10) | | 10 | | |

| **protocTrigValueInt32** | | | | | |
|---|---|---|---|---|---|
| Logging: Integer 32-bit value with which trigger variable must be compared | | | | | |
| - | 0 | 0 | | UDoubleword | wr |
| Multi-line: yes | User No. (1-10) | | 10 | | |

| **protocTrigValueReal32** | | | | | |
|---|---|---|---|---|---|
| Logging: Real 32-bit value with which trigger variable must be compared | | | | | |
| - | 0 | 0 | | Float | wr |
| Multi-line: yes | User No. (1-10) | | 10 | | |

© Siemens AG 2004 All Rights Reserved

| **protocTrigValueReal64** | | | | | |
|---|---|---|---|---|---|
| Logging: Real 64-bit value with which trigger variable must be compared | | | | | |
| - | 0 | 0 | | Double | wr |
| Multi-line: yes | User No. (1-10) | | 10 | | |

| **protocTrigVarArea** | | | | | |
|---|---|---|---|---|---|
| Logging: Variable which is to be monitored for the start triggering. Specification of "Area". | | | | | |
| - | 0 | 0 | | UWord | wr |
| Multi-line: yes | User No. (1-10) | | 10 | | |

| **protocTrigVarCol** | | | | | |
|---|---|---|---|---|---|
| Logging: Variable to be monitored for triggering. Specification of "Col". | | | | | |
| - | 0 | 0 | | UWord | wr |
| Multi-line: yes | User No. (1-10) | | 10 | | |

| **protocTrigVarRow** | | | | | |
|---|---|---|---|---|---|
| Logging: Variable to be monitored for triggering. Specification of "Row". | | | | | |
| - | 0 | 0 | | UWord | wr |
| Multi-line: yes | User No. (1-10) | | 10 | | |

| **protocTrigVarType** | | | | | |
|---|---|---|---|---|---|
| Logging: Variable to be monitored for triggering. Specification of "Type". | | | | | |
| - | 0 | 0 | | UWord | wr |
| Multi-line: yes | User No. (1-10) | | 10 | | |

| **protocTrigVarUnit** | | | | | |
|---|---|---|---|---|---|
| Logging: Variable to be monitored for triggering. Specification of "Unit". | | | | | |
| - | 0 | 0 | | UWord | wr |
| Multi-line: yes | User No. (1-10) | | 10 | | |

| **protSessAccR** | | | | | |
|---|---|---|---|---|---|
| Logging: Access rights of the session | | | | | |
| - | | | | String[32] | wr |
| Multi-line: yes | User no. (1-10) | | 10 | | |

| **protSessComm** | | | | | |
|---|---|---|---|---|---|
| Logging: Comments on session | | | | | |
| - | | | | String[128] | wr |
| Multi-line: yes | User no. (1-10) | | 10 | | |

| **protSessConn** | | | | | |
|---|---|---|---|---|---|
| Logging: Connection of the session | | | | | |
| - | | | | String[32] | wr |
| Multi-line: yes | User no. (1-10) | | 10 | | |

| **protSessName** | | | | | |
|---|---|---|---|---|---|
| Logging: Name of the session | | | | | |
| - | | | | String[32] | wr |
| Multi-line: yes | User no. (1-10) | | 10 | | |

© Siemens AG 2004 All Rights Reserved

| **protSessPrior** | | | | | |
|---|---|---|---|---|---|
| Logging: Priority of the session | | | | | |
| - | | | | String[32] | wr |
| Multi-line: yes | User no. (1-10) | | 10 | | |

| **safeExtInpValNckBit** | $A_INSE[n] | | | | |
|---|---|---|---|---|---|
| External NCK input of the SI programmable logic from the NCK periphery | | | | | |
| - | 0 | 0 | 1 | UWord | r |
| Multi-line: yes | Input number | | 64 | | |

| **safeExtInpValNckWord** | $A_INSED | | | | |
|---|---|---|---|---|---|
| Image of the external NCK inputs of the SI programmable logic | | | | | |
| - | 0 | | | Long Integer | r |
| Multi-line: yes | 1: image of the system variables $A_INSE[1]...[32]<br>2: image of the system variables $A_INSE[33]...[64] | | 2 | | |

| **safeExtInpValPlcBit** | $A_INSEP[n] | | | | |
|---|---|---|---|---|---|
| External PLC input of the SI programmable logic from the PLC periphery | | | | | |
| - | 0 | 0 | 1 | UWord | r |
| Multi-line: yes | Input number | | 64 | | |

| **safeExtInpValPlcWord** | $A_INSEPD | | | | |
|---|---|---|---|---|---|
| Image of the external PLC inputs of the SI programmable logic | | | | | |
| - | 0 | | | Long Integer | r |
| Multi-line: yes | 1: image of the system variables $A_INSEP[1]...[32]<br>2: image of the system variables $A_INSEP[33]...[64] | | 2 | | |

| **safeExtOutpValNckBit** | $A_OUTSE[n] | | | | |
|---|---|---|---|---|---|
| External NCK output of the SI programmable logic to the NCK periphery | | | | | |
| - | 0 | 0 | 1 | UWord | r |
| Multi-line: yes | Output number | | 64 | | |

| **safeExtOutpValNckWord** | $A_OUTSED | | | | |
|---|---|---|---|---|---|
| Image of the external NCK outputs of the SI programmable logic | | | | | |
| - | 0 | | | Long Integer | r |
| Multi-line: yes | 1: image of the system variables $A_OUTSE[1]...[32]<br>2: image of the system variables $A_OUTSE[33]...[64] | | 2 | | |

| **safeExtOutpValPlcBit** | $A_OUTSEP[n] | | | | |
|---|---|---|---|---|---|
| External PLC output of the SI programmable logic to the PLC periphery | | | | | |
| - | 0 | 0 | 1 | UWord | r |
| Multi-line: yes | Output number | | 64 | | |

| **safeExtOutpValPlcWord** | $A_OUTSEPD | | | | |
|---|---|---|---|---|---|
| Image of the external PLC outputs of the SI programmable logic | | | | | |
| - | 0 | | | Long Integer | r |
| Multi-line: yes | 1: image of the system variable $A_OUTSEP[1]...[32]<br>2. mage of the system variable $A_OUTSEP[33]...[64] | | 2 | | |

© Siemens AG 2004 All Rights Reserved

| **safeIntInpValNckBit** | $A_INSI[n] | | | | |
|---|---|---|---|---|---|
| Internal NCK input of the SI programmable logic from the NCK's SI monitoring channel | | | | | |
| - | 0 | 0 | 1 | UWord | r |
| Multi-line: yes | Input number | | 64 | | |

| **safeIntInpValNckWord** | $A_INSID | | | | |
|---|---|---|---|---|---|
| Image of the internal NCK inputs of the SI programmable logic from the NCK's SI monitoring channel | | | | | |
| - | 0 | | | Long Integer | r |
| Multi-line: yes | 1: image of the system variables $A_INSI[1]...[32]<br>2: image of the system variables $A_INSI[33]...[64] | | 2 | | |

| **safeIntInpValPlcBit** | $A_INSIP[n] | | | | |
|---|---|---|---|---|---|
| Internal PLC input of the SI programmable logic from the 611D's SI monitoring channel | | | | | |
| - | 0 | 0 | 1 | UWord | r |
| Multi-line: yes | Input number | | 64 | | |

| **safeIntInpValPlcWord** | $A_OUTSID | | | | |
|---|---|---|---|---|---|
| Image of the internal PLC inputs of the SI programmable logic from the 611D's SI monitoring channel | | | | | |
| - | 0 | | | Long Integer | r |
| Multi-line: yes | 1: image of the system variables $A_INSIP[1]...[32]<br>2: image of the system variables $A_INSIP[33]...[64] | | 2 | | |

| **safeIntOutpValNckBit** | $A_OUTSI[n] | | | | |
|---|---|---|---|---|---|
| Internal NCK output of the SI programmable logic to the NCK's SI monitoring channel | | | | | |
| - | 0 | 0 | 1 | UWord | r |
| Multi-line: yes | Output number | | 64 | | |

| **safeIntOutpValNckWord** | $A_OUTSID | | | | |
|---|---|---|---|---|---|
| Image of the internal NCK outputs of the SI programmable logic to the NCK's SI monitoring channel | | | | | |
| - | 0 | | | Long Integer | r |
| Multi-line: yes | 1: image of the system variable $A_OUTSI[1]...[32]<br>2: image of the system variable $A_OUTSI[33]...[64] | | 2 | | |

| **safeIntOutpValPlcBit** | $A_OUTSIP[n] | | | | |
|---|---|---|---|---|---|
| Internal PLC output of the SI programmable logic to the 611D's SI monitoring channel | | | | | |
| - | 0 | 0 | 1 | UWord | r |
| Multi-line: yes | Output number | | 64 | | |

| **safeIntOutpValPlcWord** | $A_OUTSIPD | | | | |
|---|---|---|---|---|---|
| Image of the internal PLC outputs of the SI programmable logic to the 611D's SI monitoring channel | | | | | |
| - | 0 | | | Long Integer | r |
| Multi-line: yes | 1: image of the system variable $A_OUTSIP[1]...[32]<br>2: image of the system variable $A_OUTSIP[33]...[64] | | 2 | | |

| **safeMarkerNck** | $A_MARKERSI | | | | |
|---|---|---|---|---|---|
| NCK flag for the SI programmable logic | | | | | |
| - | 0 | 0 | 1 | UWord | r |
| Multi-line: no | | | 64 | | |

© Siemens AG 2004 All Rights Reserved

| **safeMarkerPlc** | $A_MARKERSIP | | | | |
|---|---|---|---|---|---|
| Image of the PLC flag-variable for SI programmable logic | | | | | |
| - | 0 | 0 | 1 | UWord | r |
| Multi-line: no | | | 64 | | |

| **safePlcIn** | $A_PLCSIIN[index] | | | | |
|---|---|---|---|---|---|
| Bit image of the single channel safety signals from PLC to NCK | | | | | |
| - | 0 | 0 | 1 | UWord | r |
| Multi-line: yes | Index for $A_PLCSIIN[1...32] | | 32 | | |

| **safePlcOut** | $A_PLCSIOUT[index] | | | | |
|---|---|---|---|---|---|
| Bit image of the single channel safety signals from NCK to PLC | | | | | |
| - | 0 | 0 | 1 | UWord | r |
| Multi-line: yes | Index for $A_PLCSIOUT[1...32] | | 32 | | |

| **safeSplStatus** | | | | | |
|---|---|---|---|---|---|
| Status of components and parameter settings required for<br>operation of Safe Programmable Logic<br><br>Bit 0: SPL interfaces $A_INSE, $A_OUTSE, $A_INSI<br>or $A_OUTSI have been parameterized<br>Bit 1: SPL program file SAFE.SPF loaded<br>Bit 2: Drive runup status 4 reached, NCK is waiting<br>for PLC to run up<br>Bit 3: Drive runup status 4 reached, PLC has<br>reached cyclic operating status. PLC can now communicate<br>with drive.<br>Bit 4: Interrupt for ASUB start of SPL must be<br>assigned (FB4 call started)<br>Bit 5: Interrupt for ASUB start of SPL has been<br>assigned (FB4 call ended)<br>Bit 6: Interrupt processing for SPL start called<br>(FC9 call started)<br>Bit 7: Interrupt processing for SPL start ended<br>(FC9 call ended)<br>Bit 8: -<br>Bit 9: NCK cross-checking has been started<br>Bit10: PLC cross-checking has been started<br>Bit11: Cyclic SPL checksum check active<br>Bit12: All SPL protective mechanisms active | | | | | |
| - | 0 | 0 | | UWord | r |
| Multi-line: no | | | 1 | | |

| **safeTimerNck** | $A_TIMERSI | | | | |
|---|---|---|---|---|---|
| NCK timer-variable for the SI programmable logic | | | | | |
| s, user defined | 0.0 | | | Double | r |
| Multi-line: no | | | 8 | | |

| **safeXcmpCmd** | $A_CMDSI[index] | | | | |
|---|---|---|---|---|---|
| Command word for cross-checking (KDV) between NCK and PLC<br><br>0:No command<br>1:Extension of time window for different signal levels in cross-checking operation between NCK and PLC | | | | | |
| - | 0 | 0 | 1 | UWord | r |
| Multi-line: no | | | 32 | | |

© Siemens AG 2004 All Rights Reserved

| **safeXcmpLevel** | $A_LEVELSID | | | | |
|---|---|---|---|---|---|
| Fill-level display for cross-checking operation (KDV)<br>between NCK and PLC. Specifies the current number<br>of signals of different levels between the NCK and PLC) | | | | | |
| - | 0 | 0 | | Long Integer | r |
| Multi-line: no | | | 1 | | |

| **safeXcmpState** | $A_STATSID | | | | |
|---|---|---|---|---|---|
| Cross-checking (KDV) error has occurred between NCK and PLC.<br><br>0: No error has occurred | | | | | |
| - | 0 | 0 | | Long Integer | r |
| Multi-line: no | | | 1 | | |

| **scalingSystemCounter** | | | | | |
|---|---|---|---|---|---|
| Modification counter for dimension system | | | | | |
| - | | | | UWord | r |
| Multi-line: yes | 1 | | 1 | | |

| **semaDataAvailable** | | | | | |
|---|---|---|---|---|---|
| Display indicating whether complete SEMA data are available for individual axes.<br>This is the case if a channel can be assigned to the relevant NCU axis, thus allowing<br>the data in the channel context to be accessed. This does not apply to link axes as these<br>are traversed by a channel of another NCU.<br>This data can be utilized by MMCs in order to conceal specific, inaccessible data<br>in link axis data displays.<br><br>Bits 0-31 stand for the axes of the NCU.<br>Bit n = 1: Data can be accessed easily<br>Bit n = 0: Not all SEMA data are accessible | | | | | |
| - | | | | Long Integer | r |
| Multi-line: yes | 1 | | 1 | | |

| **swLicensePIN** | | | | | |
|---|---|---|---|---|---|
| PIN for licensing | | | | | |
| - | | | | String[128] | wr |
| Multi-line: yes | 1 | | 1 | | |

| **sysTimeBCD** | | | | | |
|---|---|---|---|---|---|
| Time represented in PLC format:<br><month>.<day>.<year> <hours>:<minutes>:<seconds>.<milliseconds> <weekday> <status><br><weekday> can take following values: "SUN", "MON", "TUE", "WED", "THU", "FRI", "SAT" | | | | | |
| - | | | | Date+Time | r |
| Multi-line: no | | | | | |

| **sysTimeNCSC** | | | | | |
|---|---|---|---|---|---|
| NCSC system time in microseconds | | | | | |
| - | 0 | 0 | | UDoubleword | r |
| Multi-line: yes | 1 | | 1 | | |

| **sysTimeSinceStartup** | | | | | |
|---|---|---|---|---|---|
| System run time in seconds since NCK ramp-up | | | | | |
| s, user defined | 0 | 0 | | Double | r |
| Multi-line: yes | 1 | | 1 | | |

© Siemens AG 2004 All Rights Reserved

| **totalDirectorys** | | | | | |
|---|---|---|---|---|---|
| Maximum number of directories which may be created<br>see: $MN_MM_NUM_DIR_IN_FILESYSTEM | | | | | |
| - | | | | UWord | r |
| Multi-line: yes | 1 | | 1 | | |

| **totalFiles** | | | | | |
|---|---|---|---|---|---|
| Maximum number of files which may be created (see: $MM_NUM_FILES_IN_FILESYSTEM) | | | | | |
| - | | | | UWord | r |
| Multi-line: yes | 1 | | 1 | | |

| **totalMem** | | | | | S7 |
|---|---|---|---|---|---|
| Total SRAM in bytes (user memory) | | | | | |
| - | | | | Long Integer | r |
| Multi-line: yes | 1 | | | | |

| **totalMemDram** | | | | | |
|---|---|---|---|---|---|
| total DRAM in bytes | | | | | |
| - | | | | Long Integer | r |
| Multi-line: yes | 1 | | 1 | | |

| **totalMemDram2PassF** | | | | | |
|---|---|---|---|---|---|
| Size of passive file system (DRAM No.2) in bytes | | | | | |
| - | 0 | 0 | | UDoubleword | r |
| Multi-line: yes | 1 | | 1 | | |

| **totalMemDramPassF** | | | | | |
|---|---|---|---|---|---|
| Size of passive file system (DRAM No. 1) in bytes | | | | | |
| - | 0 | 0 | | UDoubleword | r |
| Multi-line: yes | 1 | | 1 | | |

| **totalMemFfs** | | | | | |
|---|---|---|---|---|---|
| Number of bytes reserved on the PCMCIA card for the<br>Flash File System (FFS) | | | | | |
| - | 0 | | | UDoubleword | r |
| Multi-line: yes | 1 | | 1 | | |

| **totalMemSramPassF** | | | | | |
|---|---|---|---|---|---|
| Size of passive file system (SRAM) in bytes | | | | | |
| - | 0 | 0 | | UDoubleword | r |
| Multi-line: yes | 1 | | 1 | | |

| **totalProtokolFiles** | $MM_PROTOC_NUM_FILES | | | | |
|---|---|---|---|---|---|
| Logging: Maximum number of log files which may be created | | | | | |
| - | 0 | 0 | 1 | UWord | r |
| Multi-line: yes | User no. (1-10) | | 10 | | |

| **traceProtocolActive** | $A_PROTOC | | | | |
|---|---|---|---|---|---|
| Logging: User status<br>1 = Not active<br>2 = Active | | | | | |
| - | 0 | 0 | 1 | UWord | r |
| Multi-line: yes | User No. (1-10) | | 10 | | |

© Siemens AG 2004 All Rights Reserved

| **traceProtocolLock** | $A_PROT_LOCK | | | | |
|---|---|---|---|---|---|
| Logging: Recording disable of a user<br>0: No disable<br>1: Disable | | | | | |
| - | 0 | 0 | 1 | UWord | wr |
| Multi-line: yes | User no. (1-10) | | 10 | | |

| **traceStopAction** | | | | | |
|---|---|---|---|---|---|
| Logging: Actions on ending the recording<br>Bit 0: Automatic restart<br>1: Disable | | | | | |
| - | 0 | 0 | | UWord | wr |
| Multi-line: yes | User no. (1-10) | | 10 | | |

| **usedDirectorys** | | | | | |
|---|---|---|---|---|---|
| Number of directories that have already been created | | | | | |
| - | | | | UWord | r |
| Multi-line: yes | 1 | | 1 | | |

| **usedFiles** | | | | | |
|---|---|---|---|---|---|
| Number of files that have already been created | | | | | |
| - | | | | UWord | r |
| Multi-line: yes | 1 | | 1 | | |

| **usedMem** | | | | | S7 |
|---|---|---|---|---|---|
| Used memory in bytes | | | | | |
| - | | | | Long Integer | r |
| Multi-line: yes | 1 | | | | |

| **usedMemDram** | | | | | |
|---|---|---|---|---|---|
| Used DRAM in bytes | | | | | |
| - | | | | Long Integer | r |
| Multi-line: yes | 1 | | 1 | | |

| **usedMemDram2PassF** | | | | | |
|---|---|---|---|---|---|
| Memory used in passive file system (DRAM No.2) in bytes | | | | | |
| - | 0 | 0 | | UDoubleword | r |
| Multi-line: yes | 1 | | 1 | | |

| **usedMemDramPassF** | | | | | |
|---|---|---|---|---|---|
| Memory used in passive file system (DRAM No. 1) in bytes | | | | | |
| - | 0 | 0 | | UDoubleword | r |
| Multi-line: yes | 1 | | 1 | | |

| **usedMemFfs** | | | | | |
|---|---|---|---|---|---|
| Number of used bytes in the Flash File System (FFS) | | | | | |
| - | 0 | | | UDoubleword | r |
| Multi-line: yes | 1 | | 1 | | |

| **usedMemSramPassF** | | | | | |
|---|---|---|---|---|---|
| Memory used in passive file system (SRAM) in bytes | | | | | |
| - | 0 | 0 | | UDoubleword | r |
| Multi-line: yes | 1 | | 1 | | |

© Siemens AG 2004 All Rights Reserved

| **usedOptionsNotLicensed** | | | | | |
|---|---|---|---|---|---|
| List of options which are not licensed | | | | | |
| - | | | | String[200] | r |
| Multi-line: yes | 1 | | 1 | | |

| **usedProtokolFiles** | | | | | |
|---|---|---|---|---|---|
| Logging: Number of protocol files that have already been created | | | | | |
| - | 0 | 0 | 1 | UWord | r |
| Multi-line: yes | User no. (1-10) | | 10 | | |

| **vaDpActTel** | $VA_DP_ACT_TEL[n, Achse] | | | | |
|---|---|---|---|---|---|
| Word for word image of the Profibus actual value message frames from drives on the Profibus/PROFIdrive | | | | | |
| - | 0 | 0 | | UDoubleword | r |
| Multi-line: yes | 100 * axis index + word offset in the message frame | | 100 * numMachAxes + 19 | | |

© Siemens AG 2004 All Rights Reserved

## 3.3.2 Area N, Mod. SALA: Alarms: List organized according to time, oldest alarm appears first

**OEM-MMC: Linkitem** /Nck/SequencedAlarms/...

The NCK alarms are sorted in a list in the order they occurred, the oldest alarm appears at the top of the list. The alarm parameters are transferred as ASCII strings, the first character contains the type information for that parameter. The following types are used:
S: General string, e.g. part program name
A: Axis name / spindle name
K: Channel name
N: Block number
Y: System error
D: Drive number

If a parameters is not assigned, an "S" is transferred.

All variables in this module are privileged variables! This means that cyclic acknowledgements are sent for these variables even if the cyclic services are no longer serviced by the NCK because of block cycle problems.
Attention: Privileged variables lose this characteristic if they are combined with non-privileged variables in a request. -> Do not combine alarm variables with other variables in a cluster!
In addition it is presumed that the cyclic services are set "on change" for the alarm variables and are not combined with other variables (not even with privileged variables) in the same request.
The module SALA only contains the alarms that are generated in the NCK. It contains neither PLC nor MMC alarms. In order to read all alarms, the OEM-MMC user should use the alarm server functions and not read the SALA module directly.

| **alarmNo** | | | | | DA |
|---|---|---|---|---|---|
| Ordinal number of an alarm (how many alarms since control ON)<br>0 = unknown alarm | | | | | |
| - | | | | Long Integer | r |
| Multi-line: yes | Alarm list index<br>The maximum alarm list index can be read via variable numAlarms in module S. | | 16 | | |

| **clearInfo** | | | | | DA |
|---|---|---|---|---|---|
| Acknowledgement criteria for an alarm<br>1 = Power On<br>2 = Reset<br>3 = Cancel<br>4 = Alarm is cancelled by NCK-software (from SW 4.1)<br>5 = Alarm is cancelled by starting a program<br>6 = Alarm is cancelled by RESET in all channels of the bags (from SW 4.1)<br>7 = Alarm is cancelled by RESET in all channels of the NC (from SW 4.1) | | | | | |
| - | | | | Long Integer | r |
| Multi-line: no | | | 1 | | |

© Siemens AG 2004 All Rights Reserved

| **fillText1** | | | | | DA |
|---|---|---|---|---|---|
| Parameter 1 of the alarm | | | | | |
| - | | | | String[32] | r |
| Multi-line: yes | Alarm list index<br>The maximum alarm list index can be read via variable numAlarms in module S. | | 16 | | |

| **fillText2** | | | | | DA |
|---|---|---|---|---|---|
| Parameter 2 of the alarm | | | | | |
| - | | | | String[32] | r |
| Multi-line: yes | Alarm list index<br>The maximum alarm list index can be read via variable numAlarms in module S. | | 16 | | |

| **fillText3** | | | | | DA |
|---|---|---|---|---|---|
| Parameter 3 of the alarm | | | | | |
| - | | | | String[32] | r |
| Multi-line: yes | Alarm list index<br>The maximum alarm list index can be read via variable numAlarms in module S. | | 16 | | |

| **fillText4** | | | | | DA |
|---|---|---|---|---|---|
| Parameter 4 of the alarm | | | | | |
| - | | | | String[32] | r |
| Multi-line: yes | Alarm list index<br>The maximum alarm list index can be read via variable numAlarms in module S. | | 16 | | |

| **textIndex** | | | | | |
|---|---|---|---|---|---|
| Alarm number (actual alarm) | | | | | |
| - | | | | Long Integer | r |
| Multi-line: yes | Alarm list index<br>The maximum alarm list index can be read via variable numAlarms in module S. | | 16 | | |

| **timeBCD** | | | | | |
|---|---|---|---|---|---|
| Time stamp of an alarm<br>Time stamp, displayed in PLC format DATE_AND_TIME | | | | | |
| - | | | | Date+Time | r |
| Multi-line: no | | | 1 | | |

© Siemens AG 2004 All Rights Reserved

## 3.3.3 Area N, Mod. SALAP: Alarms: List organized according to priority

**OEM-MMC: Linkitem** /Nck/TopPrioAlarm/...

The alarm parameters are transferred as ASCII strings, the first character contains the type information for the parameter. The following types are used:
S: General string, e.g. part program name
A: Axis name / spindle name
K: Channel name
N: Block name
Y: System error
D: Drive number

If a parameter is not assigned, an "S" is transferred.

All variables in this module are privileged variables! This means that cyclic acknowledgements are sent for these variables even if the cyclic services are no longer serviced by the NCK because of block cycle problems.
Attention: Privileged variables lose this characteristic if they are combined with non-privileged variables in a request. -> Do not combine alarm variables with other variables in a cluster!

In addition it is presumed that the cyclic services are set "on change" for the alarm variables and are not combined with other variables (not even with privileged variables) in the same request.

The module SALAP only contains the alarms that are generated in the NCK. It contains neither PLC nor MMC alarms. In order to read all alarms, the OEM-MMC user should use the alarm server functions and not read the SALAP module directly.

| **alarmNo** | | | | | DA |
|---|---|---|---|---|---|
| Ordinal number of an alarm (how many alarms since control ON)<br>0 = unknown alarm | | | | | |
| - | | | | Long Integer | r |
| Multi-line: yes | Alarm list index<br>The maximum alarm list index can be read via variable numAlarms in module S. | | 16 | | |

© Siemens AG 2004 All Rights Reserved

| **clearInfo** | | | | | DA |
|---|---|---|---|---|---|
| Acknowledgement criteria of an alarm<br>1 = Power On<br>2 = Reset<br>3 = Cancel<br>4 = Alarm is cancelled by NCK-software (from SW 4.1)<br>5 = Alarm is cancelled by starting a program<br>6 = Alarm is cancelled by RESET in all channels of the bags (from SW 4.1)<br>7 = Alarm is cancelled by RESET in all channels of the NC (from SW 4.1) | | | | | |
| - | | | | Long Integer | r |
| Multi-line: no | | | | | |

| **fillText1** | | | | | DA |
|---|---|---|---|---|---|
| Parameter 1 of the alarm | | | | | |
| - | | | | String[32] | r |
| Multi-line: yes | Alarm list index<br>The maximum alarm list index can be read via variable numAlarms in module S. | | 16 | | |

| **fillText2** | | | | | DA |
|---|---|---|---|---|---|
| Parameter 2 of the alarm | | | | | |
| - | | | | String[32] | r |
| Multi-line: yes | Alarm list index<br>The maximum alarm list index can be read via variable numAlarms in module S. | | 16 | | |

| **fillText3** | | | | | DA |
|---|---|---|---|---|---|
| Parameter 3 of the alarm | | | | | |
| - | | | | String[32] | r |
| Multi-line: yes | Alarm list index<br>The maximum alarm list index can be read via variable numAlarms in module S. | | 16 | | |

| **fillText4** | | | | | DA |
|---|---|---|---|---|---|
| Parameter 4 of the alarm | | | | | |
| - | | | | String[32] | r |
| Multi-line: yes | Alarm list index<br>The maximum alarm list index can be read via variable numAlarms in module S. | | 16 | | |

| **textIndex** | | | | | |
|---|---|---|---|---|---|
| Alarm number (actual alarm) | | | | | |
| - | | | | Long Integer | r |
| Multi-line: yes | Alarm list index<br>The maximum alarm list index can be read via variable numAlarms in module S. | | 16 | | |

| **timeBCD** | | | | | |
|---|---|---|---|---|---|
| Time stamp of an alarm<br>Time stamp, displayed in PLC format DATE_AND_TIME | | | | | |
| - | | | | Date+Time | r |
| Multi-line: no | | | | | |

© Siemens AG 2004 All Rights Reserved

## 3.3.4 Area N, Mod. SALAL: Alarms: Liste organized according to time, most recent alarm appears first

**OEM-MMC: Linkitem** /Nck/LastAlarm/...

The NCK alarms are sorted in a list in the order they occurred, the most recent alarm appears at the bottom of the list. The alarm parameters are transferred as ASCII strings, the first character contains the type information for that parameter. The following types are used:
S: General string, e.g. part program name
A: Axis name / spindle name
K: Channel name
N: Block number
Y: System error
D: Drive number

If a parameters is not assigned, an "S" is transferred.

All variables in this module are privileged variables! This means that cyclic acknowledgements are sent for these variables even if the cyclic services are no longer serviced by the NCK because of block cycle problems.
Attention: Privileged variables lose this characteristic if they are combined with non-privileged variables in a request. -> Do not combine alarm variables with other variables in a cluster!
In addition it is presumed that the cyclic services are set "on change" for the alarm variables and are not combined with other variables (not even with privileged variables) in the same request.
The module SALA only contains the alarms that are generated in the NCK. It contains neither PLC nor MMC alarms. In order to read all alarms, the OEM-MMC user should use the alarm server functions and not read the SALA module directly.

| **alarmNo** | | | | | DA |
|---|---|---|---|---|---|
| Ordinal number of an alarm (how many alarms since control ON)<br>0 = unknown alarm | | | | | |
| - | | | | Long Integer | r |
| Multi-line: yes | Alarm list index<br>The maximum alarm list index can be read via variable numAlarms in module S. | | 16 | | |

| **clearInfo** | | | | | DA |
|---|---|---|---|---|---|
| Acknowledgement criteria for an alarm<br>1 = Power On<br>2 = Reset<br>3 = Cancel<br>4 = Alarm is cancelled by NCK-software (from SW 4.1)<br>5 = Alarm is cancelled by starting a program<br>6 = Alarm is cancelled by RESET in all channels of the bags (from SW 4.1)<br>7 = Alarm is cancelled by RESET in all channels of the NC (from SW 4.1) | | | | | |
| - | | | | Long Integer | r |
| Multi-line: no | | | | | |

© Siemens AG 2004 All Rights Reserved

| **fillText1** | | | | | DA |
|---|---|---|---|---|---|
| Parameter 1 of the alarm | | | | | |
| - | | | | String[32] | r |
| Multi-line: yes | Alarm list index<br>The maximum alarm list index can be read via variable numAlarms in module S. | | 16 | | |

| **fillText2** | | | | | DA |
|---|---|---|---|---|---|
| Parameter 2 of the alarm | | | | | |
| - | | | | String[32] | r |
| Multi-line: yes | Alarm list index<br>The maximum alarm list index can be read via variable numAlarms in module S. | | 16 | | |

| **fillText3** | | | | | DA |
|---|---|---|---|---|---|
| Parameter 3 of the alarm | | | | | |
| - | | | | String[32] | r |
| Multi-line: yes | Alarm list index<br>The maximum alarm list index can be read via variable numAlarms in module S. | | 16 | | |

| **fillText4** | | | | | DA |
|---|---|---|---|---|---|
| Parameter 4 of the alarm | | | | | |
| - | | | | String[32] | r |
| Multi-line: yes | Alarm list index<br>The maximum alarm list index can be read via variable numAlarms in module S. | | 16 | | |

| **textIndex** | | | | | |
|---|---|---|---|---|---|
| Alarm number (actual alarm) | | | | | |
| - | | | | Long Integer | r |
| Multi-line: yes | Alarm list index<br>The maximum alarm list index can be read via variable numAlarms in module S. | | 16 | | |

| **timeBCD** | | | | | |
|---|---|---|---|---|---|
| Time stamp of an alarm<br>Time stamp, displayed in PLC format DATE_AND_TIME | | | | | |
| - | | | | Date+Time | r |
| Multi-line: no | | | | | |

© Siemens AG 2004 All Rights Reserved

## 3.3.5 Area N, Mod. SMA: State data: Machine axes

**OEM-MMC: Linkitem** /Nck/MachineAxis/...

All state data that are dependent on machine movement and are defined specifically for machine axes (geometry and special axes) are combined in module SMA. Supplementary information is to be found in module SEMA. The individual variables are defined as fields where the line index is the number of the machine axis (assigned to the current channel). The variable "name" in module SMA with the line index in question identifies the axis.
The assignment of the line indices in modules SMA and SEMA is identical.

| **actIncrVal** | | | | | H1 |
|---|---|---|---|---|---|
| Active INC weighting of the axis<br>0 = INC_10000<br>1 = INC_1000<br>2 = INC_100<br>3 = INC_10<br>4 = INC_1<br>5 = INC_VAR<br>6 = INC_JOG_CONT<br>7 = no incremental mode set | | | | | |
| - | | | | UWord | r |
| Multi-line: yes | Axis index | | numMachAxes | | |

| **actToolBasePos** | | | | | |
|---|---|---|---|---|---|
| Tool base position. Physical unit is defined in the variable extUnit (in this module). | | | | | |
| mm, inch, degree, user defined | | | | Double | r |
| Multi-line: yes | Axis index | | numMachAxes | | |

| **cmdToolBasePos** | | | | | |
|---|---|---|---|---|---|
| Tool base position setpoint. Physical unit is defined in variable extUnit (in this module). | | | | | |
| mm, inch, degree, user defined | | | | Double | r |
| Multi-line: yes | Axis index | | numMachAxes | | |

| **extUnit** | | | | | |
|---|---|---|---|---|---|
| Current physical unit of the axis position<br>0 = mm<br>1 = inch<br>2 = degree<br>3 = indexing position<br>4 = userdef | | | | | |
| - | | | | UWord | r |
| Multi-line: yes | Axis index | | numMachAxes | | |

| **name** | | | | | |
|---|---|---|---|---|---|
| Axis name | | | | | |
| - | | | | String[32] | r |
| Multi-line: yes | Axis index | | numMachAxes | | |

© Siemens AG 2004 All Rights Reserved

| **status** | | | | | |
|---|---|---|---|---|---|
| Axis state<br>0 = travel command in plus direction<br>1 = travel command in minus direction<br>2 = exact position coarse reached<br>3 = exact position fine reached | | | | | |
| - | | | | UWord | r |
| Multi-line: yes | Axis index | | numMachAxes | | |

| **toolBaseDistToGo** | | | | | |
|---|---|---|---|---|---|
| Tool base distance-to-go. Physical unit is defined in the variable extUnit (in this module). | | | | | |
| mm, inch, degree, user defined | | | | Double | r |
| Multi-line: yes | Axis index | | numMachAxes | | |

| **toolBaseREPOS** | | | | | |
|---|---|---|---|---|---|
| Tool base REPOS. Physical unit is defined in the variable extUnit (in this module). | | | | | |
| mm, inch, degree, user defined | | | | Double | r |
| Multi-line: yes | Axis index | | numMachAxes | | |

| **varIncrVal** | | | | | |
|---|---|---|---|---|---|
| Settable value for INC_VAR. The physical value depends on whether the axis is linear or rotary.<br>Linear axis: unit is 1 mm<br>Rotary axis: unit is 1/1000 degrees | | | | | |
| mm, inch, degree, user defined | | | | Double | r |
| Multi-line: yes | Axis index | | numMachAxes | | |

© Siemens AG 2004 All Rights Reserved

## 3.3.6 Area N, Mod. SEMA: State data: Machine axes (extension of SMA)

**OEM-MMC: Linkitem** /Nck/MachineAxis/...

All state data that are dependent on machine movement and are defined specifically for machine axes (geometry and special axes) are combined in module SMA. Supplementary information is to be found in module SEMA. The individual variables are defined as fields where the line index is the number of the machine axis (assigned to the current channel). The variable "name" in module SMA with the line index in question identifies the axis.
The assignment of the line indices in modules SMA and SEMA is identical.

| **aaActIndexAxPosNo** | $AA_ACT_INDEX_AX_POS_NO[<Achse>] | | | | |
|---|---|---|---|---|---|
| Current indexing position; the display depends on $MN_INDEX_AX_NO_MODE and the division (via table or equidistant) | | | | | |
| - | 0 | | | UDoubleword | r |
| Multi-line: yes | Axis index | | maxnumGlobMachAxes | | |

| **aaAlarmStat** | $AA_ALARM_STAT | | | | |
|---|---|---|---|---|---|
| Display indicating whether alarms are active for a PLC-controlled axis.<br>The relevant coded alarm reactions can be used as a source for the "Extended Stop and Retract" function.<br>The data is bit-coded, allowing, where necessary, individual states to be masked or evaluated separately (bits not listed supply a value of 0)<br>Bit2 = 1: NOREADY (active rapid deceleration + cancelation of servo enable)<br>Bit6 = 1: STOPBYALARM (rampm stop in all channel axes)<br>Bit9 = 1: SETVDI (VDI interface signal "Setting alarm")<br>Bit13 = 1: FOLLOWUPBYALARM (Follow-up) | | | | | |
| - | 0 | | | UWord | r |
| Multi-line: yes | Axis index | | maxnumGlobMachAxes | | |

| **aaBcsOffset** | $AA_BCS_OFFSET[Achse] | | | | |
|---|---|---|---|---|---|
| Sum of all axial offsets of an axis, such as DRF, online tool offset, $AA_OFF and ext. WO. | | | | | |
| - | 0 | | | Double | r |
| Multi-line: yes | Axis index | | maxnumGlobMachAxes | | |

| **aaCoupAct** | | | | | |
|---|---|---|---|---|---|
| Current coupling state of the slave spindle | | | | | |
| - | | | | UWord | r |
| Multi-line: yes | Axis index | | maxnumGlobMachAxes | | |

| **aaCoupOffs** | | | | | |
|---|---|---|---|---|---|
| Position offset of the synchronous spindle desired value | | | | | |
| - | | | | Double | r |
| Multi-line: yes | Axis index | | maxnumGlobMachAxes | | |

| **aaCurr** | | | | | |
|---|---|---|---|---|---|
| Actual value of the axis/spindle current in A (611D only) | | | | | |
| A | | | | Double | r |
| Multi-line: yes | Axis index | | maxnumGlobMachAxes | | |

© Siemens AG 2004 All Rights Reserved

| **aaDtbb** | | | | | |
|---|---|---|---|---|---|
| Axis-specific distance from the beginning of the block in the BCS for positioning and synchronous axes used in synchronous actions (note: SYNACT only) | | | | | |
| - | | | | Double | r |
| Multi-line: yes | Axis index | | maxnumGlobMachAxes | | |

| **aaDteb** | | | | | |
|---|---|---|---|---|---|
| Axis-specific distance to the end of the block in the BCS for positioning and synchronous axes used in synchronous actions (note: SYNACT only) | | | | | |
| - | | | | Double | r |
| Multi-line: yes | Axis index | | maxnumGlobMachAxes | | |

| **aaDtepb** | | | | | |
|---|---|---|---|---|---|
| Axis-specific distance-to-go of infeed during oscillation in the BCS (note: SYNACT only) | | | | | |
| - | | | | Double | r |
| Multi-line: yes | Axis index | | maxnumGlobMachAxes | | |

| **aaEsrEnable** | | | | | |
|---|---|---|---|---|---|
| (Axial) enabling of reactions of "Extended Stop and Retract" function.<br>The selected axial ESR reaction must be parameterized in MD $MA_ESR_REACTION. beforehand. The corresponding Stop or Retract reactions can be activated via $AN_ESR_TRIGGER (or for individual drives in the event of communications failure/ DC-link undervoltage), generator-mode operation is automatically activated in response to undervoltage conditions.<br>0: FALSE<br>1: TRUE | | | | | |
| - | 0 | 0 | 1 | UWord | r |
| Multi-line: yes | Axis index | | maxnumGlobMachAxes | | |

| **aaEsrStat** | | | | | |
|---|---|---|---|---|---|
| (Axial) status checkback signals of "Extended Stop and Retract" function, which can be applied as input signals for the gating logic of the ESR (synchronous actions).<br><br>The data is bit-coded. Individual states can therefore be masked or evaluated separately if necessary:<br>Bit0 = 1: Generator mode is activated<br>Bit1 = 1: Retract operation is activated<br>Bit2 = 1: Stop operation is activated<br>Bit3 = 1: Risk of undervoltage (DC-link voltage monitoring, voltage has dropped below warning threshold)<br>Bit4 = 1: Speed has dropped below minimum generator mode threshold (i.e. no more regenerative rotation energy is available). | | | | | |
| - | 0 | | | UWord | r |
| Multi-line: yes | Axis index | | maxnumGlobMachAxes | | |

| **aaEsrTrigger** | $AA_ESR_TRIGGER | | | | |
|---|---|---|---|---|---|
| Activation of "NC-controlled ESR" for PLC-controlled axis | | | | | |
| - | 0 | 0 | 1 | UWord | r |
| Multi-line: yes | Axis index | | maxnumGlobMachAxes | | |

| **aaIbnCorr** | $AA_IBN_CORR[<Achse>] | | | | |
|---|---|---|---|---|---|
| Current BZS setpoint value of an axis including override components | | | | | |
| - | 0 | | | Double | r |
| Multi-line: yes | Axis index | | maxnumGlobMachAxes | | |

© Siemens AG 2004 All Rights Reserved

| **aalenCorr** | $AA_IEN_CORR[<Achse>] | | | | |
|---|---|---|---|---|---|
| Current SZS setpoint value of an axis including override components | | | | | |
| - | 0 | | | Double | r |
| Multi-line: yes | Axis index | | maxnumGlobMachAxes | | |

| **aaJerkCount** | $AA_JERK_COUNT[Achse] | | | | |
|---|---|---|---|---|---|
| Total traverse processes of an axis with jerk | | | | | |
| - | | 0 | | Double | r |
| Multi-line: yes | Axis index | | maxnumGlobMachAxes | | |

| **aaJerkTime** | $AA_JERK_TIME[Achse] | | | | |
|---|---|---|---|---|---|
| Total traverse time of an axis with jerk | | | | | |
| - | | 0 | | Double | r |
| Multi-line: yes | Axis index | | maxnumGlobMachAxes | | |

| **aaJerkTotal** | $AA_JERK_TOT[Achse] | | | | |
|---|---|---|---|---|---|
| Overall total of jerk of an axis | | | | | |
| - | | 0 | | Double | r |
| Multi-line: yes | Axis index | | maxnumGlobMachAxes | | |

| **aaLeadP** | | | | | |
|---|---|---|---|---|---|
| Actual lead value position | | | | | |
| - | | | | Double | r |
| Multi-line: yes | Axis index | | maxnumGlobMachAxes | | |

| **aaLeadPTurn** | $AA_LEAD_P_TURN | | | | |
|---|---|---|---|---|---|
| Current master value - position component lost<br>as a result of modulo reduction | | | | | |
| - | 0 | 0 | | UWord | r |
| Multi-line: yes | Axis index | | maxnumGlobMachAxes | | |

| **aaLeadSp** | | | | | |
|---|---|---|---|---|---|
| Simulated lead value - position | | | | | |
| - | | | | Double | r |
| Multi-line: yes | Axis index | | maxnumGlobMachAxes | | |

| **aaLeadSv** | | | | | |
|---|---|---|---|---|---|
| Simulated leading value velocity | | | | | |
| - | | | | Double | r |
| Multi-line: yes | Axis index | | maxnumGlobMachAxes | | |

| **aaLeadTyp** | | | | | |
|---|---|---|---|---|---|
| Source of the lead value<br><br><br><br>1: actual value<br>2: desired value<br>3: simulated value | | | | | |
| - | | | | UWord | r |
| Multi-line: yes | Axis index | | maxnumGlobMachAxes | | |

| **aaLeadV** | | | | | |
|---|---|---|---|---|---|
| Actual lead value - velocity | | | | | |
| - | | | | Double | r |
| Multi-line: yes | Axis index | | maxnumGlobMachAxes | | |

© Siemens AG 2004 All Rights Reserved

| **aaLoad** | | | | | |
|---|---|---|---|---|---|
| Drive load in % (611D only) | | | | | |
| % | | | | Double | r |
| Multi-line: yes | Axis index | | maxnumGlobMachAxes | | |

| **aaMaslState** | $AA_MASL_STAT | | | | |
|---|---|---|---|---|---|
| Each slave axis currently coupled via master-slave delivers the machine axis number of the corresponding master axis.<br>Zero is displayed as default for inactive coupling. A master axis also shows default value zero.<br>0: No coupling for this axis configured, or axis is master axis, or no coupling active<br>>0: Machine axis number of the master axis with which the slave axis is currently coupled | | | | | |
| - | 0 | 0 | numGlobMachAxes | UWord | r |
| Multi-line: yes | Axis index | | maxnumGlobMachAxes | | |

| **aaMm** | | | | | |
|---|---|---|---|---|---|
| Latched probe position in the machine coordinate system | | | | | |
| - | | | | Double | wr |
| Multi-line: yes | Axis index | | maxnumGlobMachAxes | | |

| **aaMm1** | | | | | |
|---|---|---|---|---|---|
| Access to measurement result of trigger event in the MCS | | | | | |
| - | | | | Double | wr |
| Multi-line: yes | Axis index | | maxnumGlobMachAxes | | |

| **aaMm2** | | | | | |
|---|---|---|---|---|---|
| Access to measurement result of trigger event in the MCS | | | | | |
| - | | | | Double | wr |
| Multi-line: yes | Axis index | | maxnumGlobMachAxes | | |

| **aaMm3** | | | | | |
|---|---|---|---|---|---|
| Access to measurement result of trigger event in the MCS | | | | | |
| - | | | | Double | wr |
| Multi-line: yes | Axis index | | maxnumGlobMachAxes | | |

| **aaMm4** | | | | | |
|---|---|---|---|---|---|
| Access to measurement result of trigger event in the MCS | | | | | |
| - | | | | Double | wr |
| Multi-line: yes | Axis index | | maxnumGlobMachAxes | | |

| **aaOff** | | | | | |
|---|---|---|---|---|---|
| Superimposed position offset from synchronous actions | | | | | |
| - | | | | Double | r |
| Multi-line: yes | Axis index | | maxnumGlobMachAxes | | |

| **aaOffLimit** | | | | | |
|---|---|---|---|---|---|
| Limit for axial correction $AA_OFF reached (Note: for SYNACT only)<br><br>0: limit not reached<br>1: limit in positive axial direction reached<br>11: limit in negative axial direction reached | | | | | |
| - | | | | UWord | r |
| Multi-line: yes | Axis index | | maxnumGlobMachAxes | | |

© Siemens AG 2004 All Rights Reserved

| **aaOffVal** | | | | | |
|---|---|---|---|---|---|
| Integrated value of overlaid motion for an axis.<br>The negative value of this variable can be used to cancel an overlaid motion.<br>e.g. $AA_OFF[axis] = -$AA_OFF_VAL[axis] | | | | | |
| - | 0 | | | Double | r |
| Multi-line: yes | Axis index | | maxnumGlobMachAxes | | |

| **aaOscillBreakPos1** | $AA_OSCILL_BREAK_POS1[<Achse>] | | | | |
|---|---|---|---|---|---|
| Oscillation interrupt position 1 | | | | | |
| - | | | | Double | r |
| Multi-line: yes | Axis index | | maxnumGlobMachAxes | | |

| **aaOscillBreakPos2** | $AA_OSCILL_BREAK_POS2[<Achse>] | | | | |
|---|---|---|---|---|---|
| Oscillation interrupt position 2 | | | | | |
| - | | | | Double | r |
| Multi-line: yes | Axis index | | maxnumGlobMachAxes | | |

| **aaOscillReversePos1** | | | | | |
|---|---|---|---|---|---|
| Current reverse position 1 for oscillation in the BCS. For synchronous actions the value of the setting data $SA_OSCILL_REVERSE_POS1 is evaluated online; (note: SYNACT only) | | | | | |
| - | | | | Double | r |
| Multi-line: yes | Axis index | | maxnumGlobMachAxes | | |

| **aaOscillReversePos2** | | | | | |
|---|---|---|---|---|---|
| Current reverse position 2 for oscillation in the BCS; For synchronous actions the value of the setting data $SA_OSCILL_REVERSE_POS1 is evaluated online; (note: SYNACT only) | | | | | |
| - | | | | Double | r |
| Multi-line: yes | Axis index | | maxnumGlobMachAxes | | |

| **aaOvr** | | | | | |
|---|---|---|---|---|---|
| Axial override for synchronous actions | | | | | |
| - | | | | Double | r |
| Multi-line: yes | Axis index | | maxnumGlobMachAxes | | |

| **aaPlcOvr** | $AA_PLC_OVR[Achse] | | | | |
|---|---|---|---|---|---|
| Axial override specified by PLC for motion-synchronous actions | | | | | |
| - | 100 | 0 | | Double | r |
| Multi-line: yes | Axis index | | maxnumGlobMachAxes | | |

| **aaPolfa** | $AA_POLFA | | | | |
|---|---|---|---|---|---|
| The programmed retraction position of the single axis | | | | | |
| - | | | | Double | r |
| Multi-line: yes | Axis index | | maxnumGlobMachAxes | | |

| **aaPolfaValid** | $AA_POLFA_VALID | | | | |
|---|---|---|---|---|---|
| Indicates whether the retraction of the single axis is programmed<br>0: no retraction programmed for the single axis<br>1: retraction programmed as position<br>2: retraction programmed as distance | | | | | |
| - | 0 | 0 | 2 | UWord | r |
| Multi-line: yes | Axis index | | maxnumGlobMachAxes | | |

| **aaPower** | | | | | |
|---|---|---|---|---|---|
| Drive power in W (611D only) | | | | | |
| W | | | | Double | r |
| Multi-line: yes | Axis index | | maxnumGlobMachAxes | | |

© Siemens AG 2004 All Rights Reserved

| **aaSnglAxStat** | $AA_SNGLAX_STAT | | | | |
|---|---|---|---|---|---|
| Display status of a PLC-controlled axis<br>0: Not a single axis<br>1: Reset<br>2: Ended<br>3: Interrupted<br>4: Active<br>5: Alarm | | | | | |
| - | 0 | | | UWord | r |
| Multi-line: yes | Axis index | | maxnumGlobMachAxes | | |

| **aaSoftendn** | | | | | |
|---|---|---|---|---|---|
| Software end position, negative direction | | | | | |
| - | | | | Double | r |
| Multi-line: yes | Axis index | | maxnumGlobMachAxes | | |

| **aaSoftendp** | | | | | |
|---|---|---|---|---|---|
| Software end position, positive direction | | | | | |
| - | | | | Double | r |
| Multi-line: yes | Axis index | | maxnumGlobMachAxes | | |

| **aaStat** | | | | | |
|---|---|---|---|---|---|
| Axis state<br>0: no axis state available<br>1: travel command is active<br>2: axis has reached the IPO end. only for channel axes<br>3: axis in position (exact stop coarse) for all axes<br>4: axis in position (exact stop fine) for all axes | | | | | |
| - | | | | UWord | r |
| Multi-line: yes | Axis index | | maxnumGlobMachAxes | | |

| **aaSync** | | | | | |
|---|---|---|---|---|---|
| Coupling state of the following axis with lead value coupling<br><br><br><br>0: not synchronized<br>1: synchronized coarse<br>2: synchronized fine<br>3: synchronized coarse and fine | | | | | |
| - | | | | UWord | r |
| Multi-line: yes | Axis index | | maxnumGlobMachAxes | | |

| **aaTorque** | | | | | |
|---|---|---|---|---|---|
| Desired torque value in Nm (611D only) | | | | | |
| Nm | | | | Double | r |
| Multi-line: yes | Axis index | | maxnumGlobMachAxes | | |

| **aaTotalOvr** | $AA_TOTAL_OVR[Achse] | | | | |
|---|---|---|---|---|---|
| The total axial override for motion-synchronous actions | | | | | |
| - | 100 | 0 | | Double | r |
| Multi-line: yes | Axis index | | maxnumGlobMachAxes | | |

| **aaTravelCount** | $AA_TRAVEL_COUNT[Achse] | | | | |
|---|---|---|---|---|---|
| Total traverse processes of an axis | | | | | |
| - | | 0 | | Double | r |
| Multi-line: yes | Axis index | | maxnumGlobMachAxes | | |

© Siemens AG 2004 All Rights Reserved

| **aaTravelCountHS** | $AA_TRAVEL_COUNT_HS[Achse] | | | | |
|---|---|---|---|---|---|
| Total traverse processes of an axis at high speed | | | | | |
| - | | 0 | | Double | r |
| Multi-line: yes | Axis index | | maxnumGlobMachAxes | | |

| **aaTravelDist** | $AA_TRAVEL_DIST[Achse] | | | | |
|---|---|---|---|---|---|
| Total travel path of an axis in mm or degrees | | | | | |
| - | | 0 | | Double | r |
| Multi-line: yes | Axis index | | maxnumGlobMachAxes | | |

| **aaTravelDistHS** | $AA_TRAVEL_DIST_HS[Achse] | | | | |
|---|---|---|---|---|---|
| Total travel path of an axis at high speed in mm or degrees | | | | | |
| - | | 0 | | Double | r |
| Multi-line: yes | Axis index | | maxnumGlobMachAxes | | |

| **aaTravelTime** | $AA_TRAVEL_TIME[Achse] | | | | |
|---|---|---|---|---|---|
| Total traverse time of an axis in seconds | | | | | |
| - | | 0 | | Double | r |
| Multi-line: yes | Axis index | | maxnumGlobMachAxes | | |

| **aaTravelTimeHS** | $AA_TRAVEL_TIME_HS[Achse] | | | | |
|---|---|---|---|---|---|
| Total traverse time of an axis at high speed in seconds | | | | | |
| - | | 0 | | Double | r |
| Multi-line: yes | Axis index | | maxnumGlobMachAxes | | |

| **aaTyp** | | | | | |
|---|---|---|---|---|---|
| Axis type<br>0: axis in other channel<br>1: channel axis of same channel<br>2: neutral axis<br>3: PLC axis<br>4: reciprocating axis<br>5: neutral axis, currently traversing in JOG<br>6: slave axis coupled via master value<br>7: coupled motion slave axis<br>8: command axis<br>9: compile cycle axis | | | | | |
| - | | | | UWord | r |
| Multi-line: yes | Axis index | | maxnumGlobMachAxes | | |

| **aaVactB** | | | | | |
|---|---|---|---|---|---|
| Axis velocity in basic coordinate system | | | | | |
| mm/min, inch/min, user defined | 0.0 | | | Double | r |
| Multi-line: yes | Axis index | | maxnumGlobMachAxes | | |

| **aaVactM** | | | | | |
|---|---|---|---|---|---|
| Axis velocity in machine coordinate system | | | | | |
| mm/min, inch/min, user defined | 0.0 | | | Double | r |
| Multi-line: yes | Axis index | | maxnumGlobMachAxes | | |

| **aaVc** | | | | | |
|---|---|---|---|---|---|
| Additive correction value for path feed or axial feed | | | | | |
| - | | | | Double | r |
| Multi-line: yes | Axis index | | maxnumGlobMachAxes | | |

© Siemens AG 2004 All Rights Reserved

| **ackSafeMeasPos** | | | | | |
|---|---|---|---|---|---|
| Confirmation of SI actual position<br>0 = not confirmed<br>0x00AC = confirmed | | | | | |
| - | | | | UWord | wr |
| Multi-line: yes | Axis index | | maxnumGlobMachAxes | | |

| **actCouppPosOffset** | | | | | S3 |
|---|---|---|---|---|---|
| Position offset of an axis to a leading axis / leading spindle (actual value) | | | | | |
| mm, inch, degree, user defined | | 0 | 360 | Double | r |
| Multi-line: yes | Axis index | | maxnumGlobMachAxes | | |

| **actFeedRate** | | | | | S5 |
|---|---|---|---|---|---|
| Actual value of axis-specific feedrate for positioning axes. Actual value of single axis feed for additional axes. | | | | | |
| - | | | | Double | r |
| Multi-line: yes | Axis index | | maxnumGlobMachAxes | | |

| **actIndexAxPosNo** | | | | | |
|---|---|---|---|---|---|
| Current indexing position number<br>0 = no indexing position<br>>0 = indexing position number | | | | | |
| - | | | | UWord | r |
| Multi-line: yes | Axis index | | maxnumGlobMachAxes | | |

| **actSpeedRel** | | | | | |
|---|---|---|---|---|---|
| Actual value of rotary speed (referring to the maximum speed in %; for 611D in MD1401), for linear drives actual value of the velocity. | | | | | |
| % | | | | Double | r |
| Multi-line: yes | Axis index | | maxnumGlobMachAxes | | |

| **actValResol** | | | | | |
|---|---|---|---|---|---|
| Actual value resolution. The physical unit is defined in measUnit (in this module) | | | | | |
| mm, inch, degree, user defined | | | | Double | r |
| Multi-line: yes | Axis index | | maxnumGlobMachAxes | | |

| **amSetupState** | | | | | |
|---|---|---|---|---|---|
| State variable of the PI Service Automatic set-up of an asynchronous motor<br>0 = inactive<br>1 = wait for PLC enable<br>2 = wait for key NC-start<br>3 = active<br>4 = stopped by Servo + fine code in the upper byte<br>5 = stopped by 611D + fine code in the upper byte<br>6 = stopped by NCK + fine code in the upper byte | | | | | |
| - | 0 | 0 | 0xff06 | UWord | r |
| Multi-line: yes | Axis index | | maxnumGlobMachAxes | | |

| **axComp** | | | | | |
|---|---|---|---|---|---|
| Sum of axis-specific compensation values (CEC Cross Error compensation and temperature compensation). The physical unit is defined in measUnit (in this module). | | | | | |
| mm, inch, degree, user defined | | | | Double | r |
| Multi-line: yes | Axis index | | maxnumGlobMachAxes | | |

© Siemens AG 2004 All Rights Reserved

| **axisActiveInChan** | | | | | |
|---|---|---|---|---|---|
| Flag indicating whether axis is active in this channel<br>0 = not active<br>1 = active | | | | | |
| - | | | | UWord | r |
| Multi-line: yes | Axis index | | maxnumGlobMachAxes | | |

| **axisFeedRateUnit** | | | | | |
|---|---|---|---|---|---|
| Unit of the axis-specific feedrate<br>0 = mm/min<br>1 = inch/min<br>2 = degree/min | | | | | |
| - | | | | UWord | r |
| Multi-line: yes | Axis index | | maxnumGlobMachAxes | | |

| **chanAxisNoGap** | | | | | |
|---|---|---|---|---|---|
| Display indicating whether axis exists, i.e. no axis gap in channel.<br>0: Axis does not exist<br>1: Axis does exist | | | | | |
| - | 0 | 0 | 1 | UWord | r |
| Multi-line: yes | Axis index | | maxnumGlobMachAxes | | |

| **chanNoAxisIsActive** | | | | | |
|---|---|---|---|---|---|
| Channel number in which the channel axis is currently active<br>0 = axis is not assigned to any channel<br>1 to maxnumChannels (Area.:N / Module:Y) = channel number | | | | | |
| - | | | | UWord | r |
| Multi-line: yes | Axis index | | maxnumGlobMachAxes | | |

| **cmdContrPos** | | | | | |
|---|---|---|---|---|---|
| Desired value of position after fine interpolation | | | | | |
| mm, inch, degree, user defined | | | | Double | r |
| Multi-line: yes | Axis index | | maxnumGlobMachAxes | | |

| **cmdCouppPosOffset** | | | | | S3 |
|---|---|---|---|---|---|
| Position offset of an axis referring to the leading axis / leading spindle (desired value) | | | | | |
| mm, inch, degree, user defined | | 0 | 360 | Double | r |
| Multi-line: yes | Axis index | | maxnumGlobMachAxes | | |

| **cmdFeedRate** | | | | | |
|---|---|---|---|---|---|
| Setpoint of axis-specific feedrate, if axis is a positioning axis. Single axis feedrate setpoint if the axis is an additional axis. | | | | | |
| - | | | | Double | r |
| Multi-line: yes | Axis index | | maxnumGlobMachAxes | | |

| **cmdSpeedRel** | | | | | |
|---|---|---|---|---|---|
| Desired value of rotary speed. (referring to the max. speed in %; for 611D in MD 1401). For linear motors actual value of velocity. | | | | | |
| % | | | | Double | r |
| Multi-line: yes | Axis index | | maxnumGlobMachAxes | | |

| **contrConfirmActive** | | | | | |
|---|---|---|---|---|---|
| Controller enable<br>0 = no controller enable<br>1 = controller enable | | | | | |
| - | | | | UWord | r |
| Multi-line: yes | Axis index | | maxnumGlobMachAxes | | |

© Siemens AG 2004 All Rights Reserved

| **contrMode** | | | | | |
|---|---|---|---|---|---|
| Identifier for controller mode servo<br>0 = position control<br>1 = speed control<br>2 = stop<br>3 = park<br>4 = follow-up | | | | | |
| - | | | | UWord | r |
| Multi-line: yes | Axis index | | maxnumGlobMachAxes | | |

| **displayAxis** | | | | | |
|---|---|---|---|---|---|
| Identifier indicating whether axis is displayed by MMC as a machine axis.<br>0 = Do not display at all<br>0xFFFF = Always display everything<br>bit 0 = Display in actual-value window<br>bit 1 = Display in reference point window<br>bit 2 = Display in Preset / Basic offset / Scratching<br>bit 3 = Display in handwheel selection | | | | | |
| - | 0xFFFF | 0 | 0xFFFF | UWord | r |
| Multi-line: yes | Axis index | | maxnumGlobMachAxes | | |

| **distPerDriveRevol** | | | | | |
|---|---|---|---|---|---|
| Distance per revolution. The physical unit is defined in measUnit (in this module). | | | | | |
| mm, inch, degree, user defined | | | | Double | r |
| Multi-line: yes | Axis index | | maxnumGlobMachAxes | | |

| **drive2ndTorqueLimit** | | | | | |
|---|---|---|---|---|---|
| 2nd torque limit. With linear motors: 2nd force limit<br>0 = not active<br>1 = active | | | | | |
| - | | | | UWord | r |
| Multi-line: yes | Axis index | | maxnumGlobMachAxes | | |

| **driveActMotorSwitch** | | | | | |
|---|---|---|---|---|---|
| Actual motor wiring (star/delta)<br>0 = star<br>1 = delta | | | | | |
| - | | | | UWord | r |
| Multi-line: yes | Axis index | | maxnumGlobMachAxes | | |

| **driveActParamSet** | | | | | |
|---|---|---|---|---|---|
| Number of the actual drive parameter set | | | | | |
| - | | 1 | 8 | UWord | r |
| Multi-line: yes | Axis index | | maxnumGlobMachAxes | | |

| **driveClass1Alarm** | | | | | |
|---|---|---|---|---|---|
| Message ZK1 drive alarm<br>0 = no alarm set<br>1= alarm set (fatal error occured) | | | | | |
| - | | | | UWord | r |
| Multi-line: yes | Axis index | | maxnumGlobMachAxes | | |

| **driveContrMode** | | | | | |
|---|---|---|---|---|---|
| Control mode of drive<br>0 = current control<br>1 = speed control | | | | | |
| - | | | | UWord | r |
| Multi-line: yes | Axis index | | maxnumGlobMachAxes | | |

© Siemens AG 2004 All Rights Reserved

| **driveCoolerTempWarn** | | | | | |
|---|---|---|---|---|---|
| Heatsink temperature monitoring<br>0 = temperature OK<br>1 = overtemperature | | | | | |
| - | | | | UWord | r |
| Multi-line: yes | Axis index | | maxnumGlobMachAxes | | |

| **driveDesMotorSwitch** | | | | | |
|---|---|---|---|---|---|
| Motor wiring selection (star/delta)<br>0 = star<br>1 = delta | | | | | |
| - | | | | UWord | r |
| Multi-line: yes | Axis index | | maxnumGlobMachAxes | | |

| **driveDesParamSet** | | | | | |
|---|---|---|---|---|---|
| Desired parameter set of the drive | | | | | |
| - | | 1 | 8 | UWord | r |
| Multi-line: yes | Axis index | | maxnumGlobMachAxes | | |

| **driveFastStop** | | | | | |
|---|---|---|---|---|---|
| Ramp-function generator rapid stop<br>0 = not stopped<br>1 = stopped | | | | | |
| - | | | | UWord | r |
| Multi-line: yes | Axis index | | maxnumGlobMachAxes | | |

| **driveFreqMode** | | | | | |
|---|---|---|---|---|---|
| I/F mode | | | | | |
| - | | | | UWord | r |
| Multi-line: yes | Axis index | | maxnumGlobMachAxes | | |

| **driveImpulseEnabled** | | | | | |
|---|---|---|---|---|---|
| Enable inverter impulse (checkback signal to impulseEnable)<br>0 = not enabled<br>1 = enabled | | | | | |
| - | | | | UWord | r |
| Multi-line: yes | Axis index | | maxnumGlobMachAxes | | |

| **driveIndex** | | | | | |
|---|---|---|---|---|---|
| Drive assignment (logical drive number)<br>0 = drive does not exist<br>1 to 15 = logical drive number | | | | | |
| - | | 0 | 15 | UWord | r |
| Multi-line: yes | Axis index | | maxnumGlobMachAxes | | |

| **driveIntegDisable** | | | | | |
|---|---|---|---|---|---|
| Integrator disable<br>0 = not disabled<br>1 = disabled | | | | | |
| - | | | | UWord | r |
| Multi-line: yes | Axis index | | maxnumGlobMachAxes | | |

| **driveLinkVoltageOk** | | | | | |
|---|---|---|---|---|---|
| State of the DC link voltage<br>0 = OK<br>1 = not OK | | | | | |
| - | | | | UWord | r |
| Multi-line: yes | Axis index | | maxnumGlobMachAxes | | |

© Siemens AG 2004 All Rights Reserved

| **driveMotorTempWarn** | | | | | |
|---|---|---|---|---|---|
| Motor temperature warning<br>0 = temperature OK<br>1 = overtemperature | | | | | |
| - | | | | UWord | r |
| Multi-line: yes | Axis index | | maxnumGlobMachAxes | | |

| **driveNumCrcErrors** | | | | | |
|---|---|---|---|---|---|
| CRC errors on the drive bus<br>(transmission errors when writing data to the 611D; values may range up to FFFFH)<br>0 = no error | | | | | |
| - | | | | UWord | r |
| Multi-line: yes | Axis index | | maxnumGlobMachAxes | | |

| **driveParked** | | | | | |
|---|---|---|---|---|---|
| Parking axis<br>0 = no parking axis<br>1 = parking axis | | | | | |
| - | | | | UWord | r |
| Multi-line: yes | Axis index | | maxnumGlobMachAxes | | |

| **drivePowerOn** | | | | | |
|---|---|---|---|---|---|
| Drive switched on<br>0 = drive not switched on<br>1 = drive switched on | | | | | |
| - | | | | UWord | r |
| Multi-line: yes | Axis index | | maxnumGlobMachAxes | | |

| **driveProgMessages** | | | | | |
|---|---|---|---|---|---|
| Configurable messages (via machine data) | | | | | |
| - | | | | UWord | r |
| Multi-line: yes | Axis index | | maxnumGlobMachAxes | | |

| **driveReady** | | | | | |
|---|---|---|---|---|---|
| Drive ready<br>0 = drive not ready<br>1 = drive ready | | | | | |
| - | | | | UWord | r |
| Multi-line: yes | Axis index | | maxnumGlobMachAxes | | |

| **driveRunLevel** | | | | | |
|---|---|---|---|---|---|
| Current state reached during the boot process<br>(range: coarse state (0 to 5) * 100 + fine state (up to 22)<br>Boot firmware ---> 0 XX<br>Enter configuration ---> 1XX<br>Hardware init, communication init<br>Load, convert data ---> 2XX<br>Change bus addressing ---> 3XX<br>Prepare synchronization ---> 4XX<br>Activate interrupt ---> 519<br><br>XX ==> fine state | | | | | |
| - | | | | UWord | r |
| Multi-line: yes | Axis index | | maxnumGlobMachAxes | | |

© Siemens AG 2004 All Rights Reserved

| **driveSetupMode** | | | | | |
|---|---|---|---|---|---|
| Set-up mode<br>0 = not active<br>1 = active | | | | | |
| - | | | | UWord | r |
| Multi-line: yes | Axis index | | maxnumGlobMachAxes | | |

| **driveSpeedSmoothing** | | | | | |
|---|---|---|---|---|---|
| Smoothing the desired value of the rotary speed, for linear drives: smoothing the desired value of the velocity<br>0 = no smoothing<br>1 = smoothing | | | | | |
| - | | | | UWord | r |
| Multi-line: yes | Axis index | | maxnumGlobMachAxes | | |

| **effComp1** | | | | | |
|---|---|---|---|---|---|
| Sum of the compensation values for encoder 1. The value results from: Temperature compensation, backlash compensation, quadrant error compensation, beam sag compensation, leadscrew error compensation. The physical unit is defined in measUnit (in this module). | | | | | |
| mm, inch, degree, user defined | | | | Double | r |
| Multi-line: yes | Axis index | | maxnumGlobMachAxes | | |

| **effComp2** | | | | | |
|---|---|---|---|---|---|
| Sum of the compensation values for encoder 2. The value results from: Temperature compensation, backlash compensation, quadrant error compensation, beam sag compensation, leadscrew error compensation. The physical unit is defined in measUnit (in this module). | | | | | |
| mm, inch, degree, user defined | | | | Double | r |
| Multi-line: yes | Axis index | | maxnumGlobMachAxes | | |

| **encChoice** | | | | | |
|---|---|---|---|---|---|
| Active encoder<br>0 = does not exist<br>1 = encoder 1<br>2 = encoder 2 | | | | | |
| - | | | | UWord | r |
| Multi-line: yes | Axis index | | maxnumGlobMachAxes | | |

| **fctGenState** | | | | | |
|---|---|---|---|---|---|
| State of the function generator | | | | | |
| - | | | | UWord | r |
| Multi-line: yes | Axis index | | maxnumGlobMachAxes | | |

| **feedRateOvr** | | | | | |
|---|---|---|---|---|---|
| Feedrate override (only if axis is a positioning axis) | | | | | |
| % | | | | Double | r |
| Multi-line: yes | Axis index | | maxnumGlobMachAxes | | |

| **focStat** | | | | | |
|---|---|---|---|---|---|
| Current status of "Travel with limited torque" function<br>0-2<br>0: FOC not active<br>1: FOC modal active (programming of FOCON[])<br>2: FOC non-modal active (programming of FOC[]) | | | | | |
| - | 0 | 0 | 2 | UWord | r |
| Multi-line: yes | Axis index | | maxnumGlobMachAxes | | |

© Siemens AG 2004 All Rights Reserved

| **fxsInfo** | $VA_FXS_INFO[Achse] | | | | |
|---|---|---|---|---|---|
| Additional information on travel to fixed stop if<br>$VA_FXS[]=2, or OPI variable /N/SEMA/fxsStat=2.<br>0 No additional information available<br>1 No approach motion programmed<br>2 Programmed end position reached, movement ended<br>3 Abort by NC RESET (Reset key)<br>4 Fixed stop window exited<br>5 Torque reduction was rejected by drive<br>6 PLC has canceled enable signals | | | | | |
| - | 0 | 0 | 6 | UWord | r |
| Multi-line: yes | Axis index | | maxnumGlobMachAxes | | |

| **fxsStat** | | | | | |
|---|---|---|---|---|---|
| State after travelling to fixed stop<br>0 = normal control<br>1 = fixed stop reached<br>2 = failed | | | | | |
| - | | | | UWord | r |
| Multi-line: yes | Axis index | | maxnumGlobMachAxes | | |

| **handwheelAss** | | | | | |
|---|---|---|---|---|---|
| Number of handwheel assigned to an axis<br>0 = no handwheel assigned<br>1 to 3 = handwheel number | | | | | |
| - | | 0 | 3 | UWord | r |
| Multi-line: yes | Axis index | | maxnumGlobMachAxes | | |

| **impulseEnable** | | | | | |
|---|---|---|---|---|---|
| Impulse enable for drive<br>0 = not enabled<br>1 = enabled | | | | | |
| - | | | | UWord | r |
| Multi-line: yes | Axis index | | maxnumGlobMachAxes | | |

| **index** | | | | | |
|---|---|---|---|---|---|
| Absolute axis index referred to machine data | | | | | |
| - | | | | UWord | r |
| Multi-line: yes | Axis index | | maxnumGlobMachAxes | | |

| **isDriveUsed** | | | | | |
|---|---|---|---|---|---|
| One or more machine axes are assigned to each drive.<br>The drive can only be controlled at any one time by one of these machine axes. The machine manufacturer makes the selection.<br>The status of the drive control changes dynamically. | | | | | |
| - | 0 | 0 | 1 | UWord | r |
| Multi-line: yes | Axis index | | maxnumGlobMachAxes | | |

| **kVFactor** | | | | | |
|---|---|---|---|---|---|
| position control gain factor | | | | | |
| 16.667 1/s | | | | Double | r |
| Multi-line: yes | Axis index | | maxnumGlobMachAxes | | |

| **lag** | | | | | |
|---|---|---|---|---|---|
| Following error = desired value of position after fine interpolation - actual value of position. The physical unit is defined in measUnit (in this module). | | | | | |
| mm, inch, degree, user defined | | | | Double | r |
| Multi-line: yes | Axis index | | maxnumGlobMachAxes | | |

© Siemens AG 2004 All Rights Reserved

| **logDriveNo** | | | | | |
|---|---|---|---|---|---|
| Drive assignment (logical drive number)<br>0 = not available<br>1 to 15 = drive number | | | | | |
| - | | 0 | 15 | UWord | r |
| Multi-line: yes | Axis index | | maxnumGlobMachAxes | | |

| **measFctState** | | | | | |
|---|---|---|---|---|---|
| State of the probing function | | | | | |
| - | | | | UWord | r |
| Multi-line: yes | Axis index | | maxnumGlobMachAxes | | |

| **measPos1** | | | | | |
|---|---|---|---|---|---|
| Actual value of position for encoder 1. The physical unit is defined in measUnit (in this module). | | | | | |
| mm, inch, degree, user defined | | | | Double | r |
| Multi-line: yes | Axis index | | maxnumGlobMachAxes | | |

| **measPos2** | | | | | |
|---|---|---|---|---|---|
| Actual value of position for encoder 2. The physical unit is defined in measUnit (in this module). | | | | | |
| mm, inch, degree, user defined | | | | Double | r |
| Multi-line: yes | Axis index | | maxnumGlobMachAxes | | |

| **measPosDev** | | | | | |
|---|---|---|---|---|---|
| Actual position difference between the two encoders. The physical unit is defined in measUnit (in this module). | | | | | |
| mm, inch, degree, user defined | | | | Double | r |
| Multi-line: yes | Axis index | | maxnumGlobMachAxes | | |

| **measUnit** | | | | | |
|---|---|---|---|---|---|
| Unit for service values of the drives<br>0 = mm<br>1 = inch<br>2 = grd | | | | | |
| - | | | | UWord | r |
| Multi-line: yes | Axis index | | maxnumGlobMachAxes | | |

| **paramSetNo** | | | | | |
|---|---|---|---|---|---|
| Number of parameter set | | | | | |
| - | | 1 | 8 | UWord | r |
| Multi-line: yes | Axis index | | maxnumGlobMachAxes | | |

| **preContrFactTorque** | | | | | |
|---|---|---|---|---|---|
| Feed forward control factor torque | | | | | |
| Nm | | | | Double | r |
| Multi-line: yes | Axis index | | maxnumGlobMachAxes | | |

| **preContrFactVel** | | | | | |
|---|---|---|---|---|---|
| Feed forward control factor velocity | | | | | |
| - | | | | Double | r |
| Multi-line: yes | Axis index | | maxnumGlobMachAxes | | |

© Siemens AG 2004 All Rights Reserved

| **preContrMode** | | | | | |
|---|---|---|---|---|---|
| Feed forward control mode<br>0 = inactive<br>1 = velocity feed forward<br>2 = torque feed forward | | | | | |
| - | | | | UWord | r |
| Multi-line: yes | Axis index | | maxnumGlobMachAxes | | |

| **PRESETActive** | | | | | |
|---|---|---|---|---|---|
| Preset state<br>0 = no preset active<br>1 = preset active | | | | | |
| - | | | | UWord | r |
| Multi-line: yes | Axis index | | maxnumGlobMachAxes | | |

| **PRESETVal** | | | | | |
|---|---|---|---|---|---|
| The function PRESETON (...) programs a zero offset for an axis. The value of the offset is stored in the variable 'PRESETVal'. The variable can be overwritten by the part program and by the MMC. | | | | | |
| mm, inch, user defined | | | | Double | wr |
| Multi-line: yes | Axis index | | maxnumGlobMachAxes | | |

| **progIndexAxPosNo** | | | | | |
|---|---|---|---|---|---|
| Programmed indexing position number<br>0 = no indexing position<br>>0 = indexing position number | | | | | |
| - | | | | UWord | r |
| Multi-line: yes | Axis index | | maxnumGlobMachAxes | | |

| **qecLrnIsOn** | | | | | |
|---|---|---|---|---|---|
| Quadrant error compensation learning active<br>0 = inactive<br>1 = Neuronal-QEC learning active<br>2 = Standard-QEC active<br>3 = Standard-QEC with adaptation of correction value active<br>4 = Neuronal-QEC active<br>5 = Neuronal-QEC with adaptation of measuring time active<br>6 = Neuronal-QEC with adaptation of decay time of correction value active<br>7 = Neuronal-QEC with adaptation of measuring time and decay time of correction value active | | | | | |
| - | | 0 | 7 | UWord | r |
| Multi-line: yes | Axis index | | maxnumGlobMachAxes | | |

| **refPtBusy** | | | | | |
|---|---|---|---|---|---|
| Axis is being referenced<br>0 = axis is not being referenced<br>1 = axis is being referenced | | | | | |
| - | | | | UWord | r |
| Multi-line: yes | Axis index | | maxnumGlobMachAxes | | |

| **refPtCamNo** | | | | | |
|---|---|---|---|---|---|
| Reference point cam<br>0 = no cam approached<br>1 = cam 1<br>2 = cam 2<br>3 = cam 3<br>4 = cam 4 | | | | | |
| - | | | | UWord | r |
| Multi-line: yes | Axis index | | maxnumGlobMachAxes | | |

© Siemens AG 2004 All Rights Reserved

| **refPtStatus** | | | | | |
|---|---|---|---|---|---|
| Identifier indicating whether an axis requires referencing and is referenced.<br><br>Note regarding exchange axes:<br>An exchange axis need only ever be referenced in the channel to which it is currently assigned. A referenced exchange axis is thus logged onto the channel in which it is traversing with value "3" (requires referencing and referenced) and in other channels with value "1" (does not require referencing, but referenced).<br>A set bit means:<br><br>SW release 3.1 and earlier:<br>Bit0: at least 1 measuring system has been referenced<br>Bit1: current measuring system requires referencing<br><br>SW release 3.2 and later:<br>Bit0: current measuring system has been referenced<br>Bit1: current measuring system requires referencing<br>(The busy signal effects the status) | | | | | |
| - | Achsindex | | | UWord | r |
| Multi-line: no | | | maxnumGlobMachAxes | | |

| **safeAcceptCheckPhase** | | | | | |
|---|---|---|---|---|---|
| Flag for NCK-side acceptance test phase, the human-machine interface can determine which acceptance test phase is present on the NCK.<br><br>0: NCK has acceptance test phase inactive = 0<br>0ACH: NCK has acceptance test phase active | | | | | |
| - | 0 | 0 | 0ACH | UWord | r |
| Multi-line: yes | Axis index | | maxnumGlobMachAxes | | |

| **safeAcceptTestMode** | | | | | |
|---|---|---|---|---|---|
| SI PowerOn alarms can be acknowledged by Reset in acceptance test mode<br>0: Acceptance test mode: SI PowerOn alarms cannot be acknowledged by Reset<br>0ACH: Acceptance test mode: SI PowerOn alarms can be acknowledged by Reset | | | | | |
| - | 0 | 0 | 0FFH | UWord | wr |
| Multi-line: yes | Axis index | | maxnumGlobMachAxes | | |

| **safeAcceptTestPhase** | | | | | |
|---|---|---|---|---|---|
| Flag for acceptance test phase<br>0: Acceptance test Wizard not selected, activate NCK-side alarm suppression<br>0ACH: Dialogs for acceptance test support selected, deactivate NCK-side alarm suppression | | | | | |
| - | 0 | 0 | 0FFH | UWord | wr |
| Multi-line: yes | Axis index | | maxnumGlobMachAxes | | |

| **safeAcceptTestSE** | | | | | |
|---|---|---|---|---|---|
| Flag for NCK-side SE acceptance test. The human-machine interface starts checking the safe limit positions during the acceptance test<br><br>0: NCK has SE acceptance test inactive = 0. The single channel SW limit positions are activated.<br>0ACH: NCK is to activate SE acceptance test. The single channel SW limit positions are deactivated in this way. | | | | | |
| - | 0 | 0 | 0ACH | UWord | r |
| Multi-line: yes | Axis index | | maxnumGlobMachAxes | | |

© Siemens AG 2004 All Rights Reserved

| **safeAcceptTestState** | | | | | |
|---|---|---|---|---|---|
| Flag for acceptance test status, the human-machine interface can determine which acceptance test mode is present on the NCK.<br><br>0: NCK has inactive acceptance test mode<br>0CH: Acceptance test mode not activated because SI PowerOn alarms already present.<br>The causes of the SI PowerOn alarms must be eliminated first.<br>0DH: Acceptance test mode not activated, the HMI writes invalid values in /N/SEMA/safeAcceptTestMode to the NCK.<br>0ACH: NCK has active acceptance test mode | | | | | |
| - | 0 | 0 | 0FFH | UWord | r |
| Multi-line: yes | Axis index | | maxnumGlobMachAxes | | |

| **safeActPosDiff** | | | | | |
|---|---|---|---|---|---|
| Current actual value difference betw. NCK and drive monitoring channels | | | | | |
| mm, inch, degree, user defined | 0.0 | | | Double | r |
| Multi-line: yes | Axis index | | maxnumGlobMachAxes | | |

| **safeActVeloDiff** | | | | | |
|---|---|---|---|---|---|
| Current speed difference betw. NCK and drive monitoring channels | | | | | |
| mm/min, inch/min, user defined | 0.0 | | | Double | r |
| Multi-line: yes | Axis index | | maxnumGlobMachAxes | | |

| **safeActVeloLimit** | | | | | |
|---|---|---|---|---|---|
| Safe limit of actual speed<br>-1 => no actual speed limit active<br>>= 0 => limit of actual speed is active | | | | | |
| mm, inch, degree, user defined | | -1 | | Double | r |
| Multi-line: no | | | maxnumGlobMachAxes | | |

| **safeDesVeloLimit** | | | | | |
|---|---|---|---|---|---|
| Safe limit of desired speed<br>-1 => no desired speed limit active<br>>= 0 => desired speed limit is active | | | | | |
| mm, inch, degree, user defined | | -1 | | Double | r |
| Multi-line: no | | | maxnumGlobMachAxes | | |

| **safeFctEnable** | | | | | |
|---|---|---|---|---|---|
| Safe operation active<br>0 = not activated<br>1 = activated | | | | | |
| - | | | | UWord | r |
| Multi-line: yes | Axis index | | maxnumGlobMachAxes | | |

| **safeInputSig** | | | | | |
|---|---|---|---|---|---|
| Safe input signals of the axis | | | | | |
| - | | | | UWord | r |
| Multi-line: yes | Axis index | | maxnumGlobMachAxes | | |

| **safeInputSig2** | | | | | |
|---|---|---|---|---|---|
| Safe input signals part 2 | | | | | |
| - | | 0 | 0xffff | UWord | r |
| Multi-line: no | | | maxnumGlobMachAxes | | |

© Siemens AG 2004 All Rights Reserved

| **safeInputSigDrive** | | | | | |
|---|---|---|---|---|---|
| Safe input signals of the drive | | | | | |
| - | | | | UWord | r |
| Multi-line: yes | Axis index | | maxnumGlobMachAxes | | |

| **safeInputSigDrive2** | | | | | |
|---|---|---|---|---|---|
| Safe input signals of the drive part 2 | | | | | |
| - | | 0 | 0xffff | UWord | r |
| Multi-line: no | | | maxnumGlobMachAxes | | |

| **safeMaxVeloDiff** | | | | | |
|---|---|---|---|---|---|
| Maximum speed difference between NCK and drive monitoring channels since last NCK Reset | | | | | |
| mm/min, inch/min, user defined | 0.0 | | | Double | r |
| Multi-line: yes | Axis index | | maxnumGlobMachAxes | | |

| **safeMeasPos** | | | | | |
|---|---|---|---|---|---|
| Safe actual position of the axis. The physical unit is defined in the variable measUnit (in this module). | | | | | |
| mm, inch, degree, user defined | | | | Double | r |
| Multi-line: yes | Axis index | | maxnumGlobMachAxes | | |

| **safeMeasPosDrive** | | | | | |
|---|---|---|---|---|---|
| Safe actual position of drive. The physical unit is defined in measUnit (in this module). | | | | | |
| mm, inch, degree, user defined | | | | Double | r |
| Multi-line: yes | Axis index | | maxnumGlobMachAxes | | |

| **safeOutputSig** | | | | | |
|---|---|---|---|---|---|
| Safe output signals of the axis | | | | | |
| - | | | | UWord | r |
| Multi-line: yes | Axis index | | maxnumGlobMachAxes | | |

| **safeOutputSig2** | | | | | |
|---|---|---|---|---|---|
| Safe output signals part 2 | | | | | |
| - | | 0 | 0xffff | UWord | r |
| Multi-line: no | | | maxnumGlobMachAxes | | |

| **safeOutputSigDrive** | | | | | |
|---|---|---|---|---|---|
| Safe output signals of the drive | | | | | |
| - | | | | UWord | r |
| Multi-line: yes | Axis index | | maxnumGlobMachAxes | | |

| **safeOutputSigDrive2** | | | | | |
|---|---|---|---|---|---|
| Safe output signals of the drive part 2 | | | | | |
| - | | 0 | 0xffff | UWord | r |
| Multi-line: no | | | maxnumGlobMachAxes | | |

| **safeStopOtherAxis** | | | | | |
|---|---|---|---|---|---|
| Stop on another axis<br>0: No stop on another axis<br>1: Stop on another axis | | | | | |
| - | 0 | 0 | 1 | UWord | r |
| Multi-line: yes | Axis index | | maxnumGlobMachAxes | | |

© Siemens AG 2004 All Rights Reserved

| **spec** | | | | | |
|---|---|---|---|---|---|
| Axis specification<br>0 = path axis<br>1 = positioning axis | | | | | |
| - | | | | UWord | r |
| Multi-line: yes | Axis index | | maxnumGlobMachAxes | | |

| **subSpec** | | | | | T1 |
|---|---|---|---|---|---|
| Subspecification<br>0 = normal axis<br>1 = indexing axis | | | | | |
| - | | | | UWord | r |
| Multi-line: yes | Axis index | | maxnumGlobMachAxes | | |

| **torqLimit** | | | | | |
|---|---|---|---|---|---|
| Torque limitation value (referring to the nominal value of the drive). For linear motors: force limitation value. | | | | | |
| % | | | | Double | r |
| Multi-line: yes | Axis index | | maxnumGlobMachAxes | | |

| **traceState1** | | | | | |
|---|---|---|---|---|---|
| State of trace channel 1<br>0 = idle state<br>1 = recording started<br>2 = trigger reached<br>3 = recording ended<br>4 = recording aborted | | | | | |
| - | | | | UWord | r |
| Multi-line: yes | Axis index | | maxnumGlobMachAxes | | |

| **traceState2** | | | | | |
|---|---|---|---|---|---|
| State of trace channel 2<br>0 = idle state<br>1 = recording started<br>2 = trigger reached<br>3 = recording ended<br>4 = recording aborted | | | | | |
| - | | | | UWord | r |
| Multi-line: yes | Axis index | | maxnumGlobMachAxes | | |

| **traceState3** | | | | | |
|---|---|---|---|---|---|
| State of trace channel 3<br>0 = idle state<br>1 = recording started<br>2 = trigger reached<br>3 = recording ended<br>4 = recording aborted | | | | | |
| - | | | | UWord | r |
| Multi-line: yes | Axis index | | maxnumGlobMachAxes | | |

| **traceState4** | | | | | |
|---|---|---|---|---|---|
| State of trace channel 4<br>0 = idle state<br>1 = recording started<br>2 = trigger reached<br>3 = recording ended<br>4 = recording aborted | | | | | |
| - | | | | UWord | r |
| Multi-line: yes | Axis index | | maxnumGlobMachAxes | | |

© Siemens AG 2004 All Rights Reserved

| **trackErrContr** | | | | | |
|---|---|---|---|---|---|
| Position controller difference (actual value / desired value of position) | | | | | |
| mm, inch, degree, user defined | | | | Double | r |
| Multi-line: yes | Axis index | | maxnumGlobMachAxes | | |

| **trackErrDiff** | | | | | |
|---|---|---|---|---|---|
| Contour deviation (difference actual value of position and calculated dynamical model) | | | | | |
| mm, inch, degree, user defined | | | | Double | r |
| Multi-line: yes | Axis index | | maxnumGlobMachAxes | | |

| **type** | | | | | |
|---|---|---|---|---|---|
| Axis type<br>1 = linear axis<br>2 = rotary axis<br>3 = spindle | | | | | |
| - | | | | UWord | r |
| Multi-line: yes | Axis index | | maxnumGlobMachAxes | | |

| **vaDistTorque** | $VA_DIST_TORQUE[Achse] | | | | |
|---|---|---|---|---|---|
| Disturbing torque/max. torque (motor end, York) | | | | | |
| % | 0 | -100 | 100 | Double | r |
| Multi-line: yes | Axis index | | maxnumGlobMachAxes | | |

| **vaDpe** | $VA_DPE[x1] | | | | |
|---|---|---|---|---|---|
| Status of power enable of a machine axis<br>0 - 1 | | | | | |
| - | 0 | 0 | 1 | UWord | r |
| Multi-line: yes | Axis index | | maxnumGlobMachAxes | | |

| **valm** | $VA_IM[x] | | | | |
|---|---|---|---|---|---|
| Encoder actual value in the machine coordinate system (measured active measuring system) | | | | | |
| - | 0 | 0 | | Double | r |
| Multi-line: yes | Axis index | | maxnumGlobMachAxes | | |

| **valm1** | $VA_IM1[x] | | | | |
|---|---|---|---|---|---|
| Actual value in the machine coordinate system (measured encoder 1) | | | | | |
| - | 0 | 0 | | Double | r |
| Multi-line: yes | Axis index | | maxnumGlobMachAxes | | |

| **valm2** | $VA_IM2[x] | | | | |
|---|---|---|---|---|---|
| Actual value in the machine coordinate system (measured encoder 2) | | | | | |
| - | 0 | 0 | | Double | r |
| Multi-line: yes | Axis index | | maxnumGlobMachAxes | | |

| **vaTorqueAtLimit** | $VA_TORQUE_AT_LIMIT[Achse] | | | | |
|---|---|---|---|---|---|
| Status "effective torque equals specified torque limit"<br><br>0: Effective torque lower than torque limit<br>1: Effective torque has reached torque limit | | | | | |
| - | 0 | 0 | 1 | UWord | r |
| Multi-line: yes | Axis index | | maxnumGlobMachAxes | | |

© Siemens AG 2004 All Rights Reserved

| **vaVactm** | | | | | |
|---|---|---|---|---|---|
| Axis velocity actual value on the load side in the MCS | | | | | |
| - | | | | Double | r |
| Multi-line: yes | Axis index | | maxnumGlobMachAxes | | |

© Siemens AG 2004 All Rights Reserved

## 3.3.7 Area N, Mod. SSP: State data: Spindle

**OEM-MMC: Linkitem** /Nck/Spindle/...

All status data that refer to the spindle are combined in the module SSP. The individual variables are defined as arrays where the row index is the number of the spindle (assigned to the current channel). The spindle can be identified by reading the variables "name" or "index" in the same module with the respective row index.

The number of spindles can be read from "numSpindles" in the module Y in the area C. Values of 0 or ' ' are supplied for axes which are not spindles. The value SSP:index = 0 indicates that the axis is not a spindle.

| **acConstCutS** | $AC_CONSTCUT_S[n] | | | | |
|---|---|---|---|---|---|
| Current constant cutting rate | | | | | |
| m/min, ft/min, user defined | 0 | | | Double | r |
| Multi-line: yes | Spindle index | | numSpindles | | |

| **acSMode** | $AC_SMODE[x] | | | | |
|---|---|---|---|---|---|
| Spindle mode<br>0: No spindle present in channel or spindle is active in another channel or<br>is being used by PLC (FC18) or by synchronized actions.<br>1: Open-loop speed control mode<br>2: Positioning mode<br>3: Synchronous mode<br>4: Axis mode | | | | | |
| - | 1 | 0 | 4 | UWord | r |
| Multi-line: yes | Spindle index | | numSpindles | | |

| **actGearStage** | | | | | |
|---|---|---|---|---|---|
| Actual gear stage of spindle | | | | | |
| - | | | | UWord | r |
| Multi-line: yes | Spindle index | | numSpindles | | |

| **actSpeed** | | | | | |
|---|---|---|---|---|---|
| Spindle speed actual value | | | | | |
| rev/min, user defined | | | | Double | r |
| Multi-line: yes | Spindle index | | numSpindles | | |

| **channelNo** | | | | | |
|---|---|---|---|---|---|
| Number of channel in which spindle is configured | | | | | |
| - | | | | UWord | r |
| Multi-line: yes | Spindle index | | numSpindles | | |

| **cmdAngPos** | | | | | |
|---|---|---|---|---|---|
| Spindle position (SPOS) | | | | | |
| Degree, user defined | | | | Double | r |
| Multi-line: yes | Spindle index | | numSpindles | | |

© Siemens AG 2004 All Rights Reserved

| **cmdConstCutSpeed** | | | | | |
|---|---|---|---|---|---|
| Constant cutting speed of the master spindle. The requested value for the master spindle differs from SSP:cmdSpeed only if G96 is active | | | | | |
| mm/min, inch/min, user defined | 0.0 | | | Double | r |
| Multi-line: yes | Spindle index | | numSpindles | | |

| **cmdGearStage** | | | | | |
|---|---|---|---|---|---|
| Requested gear stage | | | | | |
| - | | | | UWord | r |
| Multi-line: yes | Spindle index | | numSpindles | | |

| **cmdGwps** | | | | | |
|---|---|---|---|---|---|
| Programmed SUG desired value (SUG is the function "constant perimeter speed of grinding wheel") | | | | | |
| m/s, ft/s | | | | Double | r |
| Multi-line: yes | Spindle index | | numSpindles | | |

| **cmdSpeed** | | | | | |
|---|---|---|---|---|---|
| Spindle speed desired value | | | | | |
| rev/min , m/min | | | | Double | r |
| Multi-line: yes | Spindle index | | numSpindles | | |

| **driveLoad** | | | | | |
|---|---|---|---|---|---|
| Load | | | | | |
| % | | | | Double | r |
| Multi-line: yes | Spindle index | | numSpindles | | |

| **gwpsActive** | {$GWPS} | | | | |
|---|---|---|---|---|---|
| SUG programming active (SUG is the function "constant perimeter speed of grinding wheel)<br>0 = not active<br>1 = active | | | | | |
| - | | | | UWord | r |
| Multi-line: yes | Spindle index | | numSpindles | | |

| **index** | | | | | |
|---|---|---|---|---|---|
| Absolute axis index referred to MD | | | | | |
| - | | | | UWord | r |
| Multi-line: yes | Spindle index | | numSpindles | | |

| **name** | | | | | |
|---|---|---|---|---|---|
| Spindle name<br>Note: If several logical spindles are referred to one physical spindle with active spindle conversion and access is made via area N of module SSP2, then the name of the first suitable logical spindle is output. | | | | | |
| - | | | | String[32] | r |
| Multi-line: yes | Spindle index | | numSpindles | | |

| **namePhys** | | | | | |
|---|---|---|---|---|---|
| Name of associated physical spindle, identical to "name" variable. | | | | | |
| - | | | | String[32] | r |
| Multi-line: yes | Spindle index | | numSpindles | | |

© Siemens AG 2004 All Rights Reserved

| **opMode** | | | | | |
|---|---|---|---|---|---|
| Spindle mode<br>0 = spindle mode<br>1 = oscillation mode (gear step changeover)<br>2 = positioning mode<br>3 = synchronous mode<br>4 = axis mode | | | | | |
| - | | | | UWord | r |
| Multi-line: yes | Spindle index | | numSpindles | | |

| **speedLimit** | | | | | |
|---|---|---|---|---|---|
| Current speed limitation for spindle | | | | | |
| rev/min , m/min | | | | Double | r |
| Multi-line: yes | Spindle index | | numSpindles | | |

| **speedOvr** | | | | | |
|---|---|---|---|---|---|
| Spindle override | | | | | |
| % | | | | Double | r |
| Multi-line: yes | Spindle index | | numSpindles | | |

| **spindleType** | | | | | |
|---|---|---|---|---|---|
| Spindle type<br>0 = master spindle<br>1 = no master spindle | | | | | |
| - | | | | UWord | r |
| Multi-line: yes | Spindle index | | numSpindles | | |

| **status** | | | | | |
|---|---|---|---|---|---|
| Spindle state<br><br><br><br>Bit0 = following spindle<br>Bit1 = leading spindle | | | | | |
| - | | | | UWord | r |
| Multi-line: yes | Spindle index | | numSpindles | | |

| **turnState** | | | | | |
|---|---|---|---|---|---|
| State of spindle rotation<br>value range to be read via BTSS variable<br>0 = clockwise<br>1 = counter-clockwise<br>2 = stop<br>value range to be read via $ variable<br>3 = clockwise<br>4 = counter-clockwise<br>5 = stop | | | | | |
| - | | | | UWord | r |
| Multi-line: yes | Spindle index | | numSpindles | | |

© Siemens AG 2004 All Rights Reserved

## 3.3.8 Area N, Mod. SSP2: State data: Spindle

**OEM-MMC: Linkitem** /Nck/LogicalSpindle/...

All state data that refer to a spindle, if a spindle converter (logical spindles) is active

| **acConstCutS** | $AC_CONSTCUT_S[n] | | | | |
|---|---|---|---|---|---|
| Current constant cutting rate | | | | | |
| m/min, ft/min, user defined | 0 | | | Double | r |
| Multi-line: yes | Logical spindle index | | numSpindlesLog | | |

| **acSMode** | $AC_SMODE[x] | | | | |
|---|---|---|---|---|---|
| Spindle mode<br>0: No spindle present in channel or spindle is active in another channel or<br>is being used by PLC (FC18) or by synchronized actions.<br>1: Open-loop speed control mode<br>2: Positioning mode<br>3: Synchronous mode<br>4: Axis mode | | | | | |
| - | 1 | 0 | 4 | UWord | r |
| Multi-line: yes | Logical spindle index | | numSpindlesLog | | |

| **actGearStage** | | | | | |
|---|---|---|---|---|---|
| Actual gear stage of spindle | | | | | |
| - | | | | UWord | r |
| Multi-line: yes | logical spindle index | | numSpindlesLog | | |

| **actSpeed** | | | | | |
|---|---|---|---|---|---|
| Spindle speed actual value | | | | | |
| rev/min, user defined | | | | Double | r |
| Multi-line: yes | logical spindle index | | numSpindlesLog | | |

| **channelNo** | | | | | |
|---|---|---|---|---|---|
| Number of channel in which spindle is configured | | | | | |
| - | | | | UWord | r |
| Multi-line: yes | logical spindle index | | numSpindlesLog | | |

| **cmdAngPos** | | | | | |
|---|---|---|---|---|---|
| Spindle position (SPOS) | | | | | |
| Degree, user defined | | | | Double | r |
| Multi-line: yes | logical spindle index | | numSpindlesLog | | |

| **cmdConstCutSpeed** | | | | | |
|---|---|---|---|---|---|
| Constant cutting speed of the master spindle. The requested value for the master spindle differs from SSP:cmdSpeed only if G96 is active | | | | | |
| mm/min, inch/min, user defined | 0.0 | | | Double | r |
| Multi-line: yes | logical spindle index | | numSpindlesLog | | |

© Siemens AG 2004 All Rights Reserved

| **cmdGearStage** | | | | | |
|---|---|---|---|---|---|
| Requested gear stage | | | | | |
| - | | | | UWord | r |
| Multi-line: yes | logical spindle index | | numSpindlesLog | | |

| **cmdGwps** | | | | | |
|---|---|---|---|---|---|
| Programmed SUG desired value (SUG is the function "constant perimeter speed of grinding wheel") | | | | | |
| m/s, ft/s | | | | Double | r |
| Multi-line: yes | logical spindle index | | numSpindlesLog | | |

| **cmdSpeed** | | | | | |
|---|---|---|---|---|---|
| Spindle speed desired value | | | | | |
| rev/min , m/min | | | | Double | r |
| Multi-line: yes | logical spindle index | | numSpindlesLog | | |

| **driveLoad** | | | | | |
|---|---|---|---|---|---|
| Load | | | | | |
| % | | | | Double | r |
| Multi-line: yes | logical spindle index | | numSpindlesLog | | |

| **gwpsActive** | {$GWPS} | | | | |
|---|---|---|---|---|---|
| SUG programming active (SUG is the function "constant perimeter speed of grinding wheel)<br>0 = not active<br>1 = active | | | | | |
| - | | | | UWord | r |
| Multi-line: yes | logical spindle index | | numSpindlesLog | | |

| **index** | | | | | |
|---|---|---|---|---|---|
| Absolute axis index referred to MD | | | | | |
| - | | | | UWord | r |
| Multi-line: yes | logical spindle index | | numSpindlesLog | | |

| **name** | | | | | |
|---|---|---|---|---|---|
| Spindle name<br>Note: If several logical spindles are referred to one physical spindle with active spindle conversion and access is made via area N of module SSP2, then the name of the first suitable logical spindle is output. | | | | | |
| - | | | | String[32] | r |
| Multi-line: yes | logical spindle index | | numSpindlesLog | | |

| **namePhys** | | | | | |
|---|---|---|---|---|---|
| Name of assigned physical spindle. | | | | | |
| - | | | | String[32] | r |
| Multi-line: yes | logical spindle index | | numSpindlesLog | | |

| **opMode** | | | | | |
|---|---|---|---|---|---|
| Spindle mode<br>0 = spindle mode<br>1 = oscillation mode (gear step changeover)<br>2 = positioning mode<br>3 = synchronous mode<br>4 = axis mode | | | | | |
| - | | | | UWord | r |
| Multi-line: yes | logical spindle index | | numSpindlesLog | | |

| **speedLimit** | | | | | |
|---|---|---|---|---|---|
| Current speed limitation for spindle | | | | | |
| rev/min , m/min | | | | Double | r |
| Multi-line: yes | logical spindle index | | numSpindlesLog | | |

© Siemens AG 2004 All Rights Reserved

| **speedOvr** | | | | | |
|---|---|---|---|---|---|
| Spindle override | | | | | |
| % | | | | Double | r |
| Multi-line: yes | logical spindle index | | numSpindlesLog | | |

| **spindleType** | | | | | |
|---|---|---|---|---|---|
| Spindle type<br>0 = master spindle<br>1 = no master spindle | | | | | |
| - | | | | UWord | r |
| Multi-line: yes | logical spindle index | | numSpindlesLog | | |

| **status** | | | | | |
|---|---|---|---|---|---|
| Spindle state<br><br><br><br>Bit0 = following spindle<br>Bit1 = leading spindle | | | | | |
| - | | | | UWord | r |
| Multi-line: yes | logical spindle index | | numSpindlesLog | | |

| **turnState** | | | | | |
|---|---|---|---|---|---|
| State of spindle rotation<br>value range to be read via BTSS variable<br>0 = clockwise<br>1 = counter-clockwise<br>2 = stop<br>value range to be read via $ variable<br>3 = clockwise<br>4 = counter-clockwise<br>5 = stop | | | | | |
| - | | | | UWord | r |
| Multi-line: yes | logical spindle index | | numSpindlesLog | | |

© Siemens AG 2004 All Rights Reserved

## 3.3.9 Area N, Mod. FA: Active NCU global frames

**OEM-MMC: Linkitem** /Nck/ActualFrame/...

There are the following frame indices:
2: IFRAME current settable work offset (only if $MN_MM_NUM_GLOBAL_USER_FRAMES > 0)
6: ACTBFRAME current total of base frames (only if $MN_MM_NUM_GLOBAL_BASE_FRAMES = 0)

The maximum frame index is: 6

| **linShift** | $P_PFRAME[x,TR] / $P_ACTFRAME / $P_IFRAME | | | | PA |
|---|---|---|---|---|---|
| Translation of an active zero offset (the physical unit is defined in basicLengthUnit in module Y in area N). | | | | | |
| mm, inch, user defined | | | | Double | r |
| Multi-line: yes | (Frame index - 1 ) * maxnumGlobMachAxes + axis number | | 6 * maxnumGlobMachAxes | | |

| **mirrorImgActive** | $P_PFRAME[x,MI] / $P_ACTFRAME / $P_IFRAME | | | | PA |
|---|---|---|---|---|---|
| Mirroring enabled in an active zero offset<br>0 = mirroring not active<br>1 = mirroring active | | | | | |
| - | | | | UWord | r |
| Multi-line: yes | (Frame index - 1 ) * maxnumGlobMachAxes + axis number | | 6 * maxnumGlobMachAxes | | |

| **rotation** | $P_PFRAME[x,RT] / $P_ACTFRAME / $P_IFRAME | | | | PA |
|---|---|---|---|---|---|
| Rotation of an active zero offset | | | | | |
| Degree | | | | Double | r |
| Multi-line: yes | (Frame index - 1 ) * maxnumGlobMachAxes + axis number | | 6 * maxnumGlobMachAxes | | |

| **scaleFact** | $P_PFRAME[x,SC] / $P_ACTFRAME / $P_IFRAME | | | | PA |
|---|---|---|---|---|---|
| Scaling factor of an active zero offset | | | | | |
| - | | | | Double | r |
| Multi-line: yes | (Frame index - 1 ) * maxnumGlobMachAxes + axis number | | 6 * maxnumGlobMachAxes | | |

© Siemens AG 2004 All Rights Reserved

## 3.3.10 Area N, Mod. FB: NCU global base frames

**OEM-MMC: Linkitem** /Nck/BaseFrame/...

This only applies if $MN_MM_NUM_GLOBAL_BASE_FRAMES > 0.

The maximum frame index is: $MN_MM_NUM_GLOBAL_BASE_FRAMES - 1

| **linShift** | $P_NCBFR[x,TR] x=FrameNo, y=Axis | | | | PA |
|---|---|---|---|---|---|
| Translation of settable zero offset (the physical unit is defined in basicLengthUnit in module Y in area N). | | | | | |
| mm, inch, user defined | | | | Double | wr |
| Multi-line: yes | (Frame index - 1 ) * maxnumGlobMachAxes + axis number | | $MN_MM_NUM_GLOBAL_BASE_FRAMES * maxnumGlobMachAxes | | |

| **linShiftFine** | $P_NCBFR[x,SI] x=FrameNo, y=Axis | | | | |
|---|---|---|---|---|---|
| Fine offset with frames, expansion of basic frames and settable frames | | | | | |
| mm, inch, user defined | | | | Double | wr |
| Multi-line: yes | (Frame index - 1 ) * maxnumGlobMachAxes + axis number | | $MN_MM_NUM_GLOBAL_BASE_FRAMES * maxnumGlobMachAxes | | |

| **mirrorImgActive** | $P_NCBFR[x ,MI] x=FrameNo, y=Axis | | | | PA |
|---|---|---|---|---|---|
| Mirroring enabled in a settable zero offset<br>0: Mirroring not active<br>1: Mirroring active | | | | | |
| - | | | | UWord | wr |
| Multi-line: yes | (Frame index - 1 ) * maxnumGlobMachAxes + axis number | | $MN_MM_NUM_GLOBAL_BASE_FRAMES * maxnumGlobMachAxes | | |

| **rotation** | $P_NCBFR[x,y,RT] x=FrameNo, y=Axis | | | | PA |
|---|---|---|---|---|---|
| Rotation of a settable zero offset | | | | | |
| Degree | | | | Double | wr |
| Multi-line: yes | (Frame index - 1 ) * maxnumGlobMachAxes + axis number | | $MN_MM_NUM_GLOBAL_BASE_FRAMES * maxnumGlobMachAxes | | |

| **scaleFact** | $P_NCBFR[x,SC] x=FrameNo, y=Axis | | | | PA |
|---|---|---|---|---|---|
| Scaling factor of a settable zero offset | | | | | |
| - | | | | Double | wr |
| Multi-line: yes | (Frame index - 1 ) * maxnumGlobMachAxes + axis number | | $MN_MM_NUM_GLOBAL_BASE_FRAMES * maxnumGlobMachAxes | | |

© Siemens AG 2004 All Rights Reserved

## 3.3.11 Area N, Mod. FU: NCU global settable frames

**OEM-MMC: Linkitem** /Nck/UserFrame/...

This only applies if $MN_MM_NUM_GLOBAL_USER_FRAMES > 0.

The following frame indices are possible:
0 = G500
1 = G54
2 = G55
3 = G56
4 = G57
5 = G505
6 = G506
:
n = G5n
:
99 = G599

The maximum frame index is: $MN_MM_NUM_GLOBAL_USER_FRAMES - 1

The PI service SETUFR has to be called in order to activate the settable frames.

| **linShift** | $P_UIFR[x,y,TR] x=FrameNo,y=Axis | | | | PA |
|---|---|---|---|---|---|
| Translation of settable zero offset (the physical unit is defined in basicLengthUnit in module Y in area N). | | | | | |
| mm, inch, user defined | | | | Double | wr |
| Multi-line: yes | (Frame index - 1 ) * maxnumGlobMachAxes + axis number | | $MN_MM_NUM_GLOBAL_USER_FRAMES * maxnumGlobMachAxes | | |

| **linShiftFine** | $P_UIFR[x,y,SI] x=FrameNo,y=Axis | | | | |
|---|---|---|---|---|---|
| Fine offset with frames, expansion of basic frames and settable frames | | | | | |
| mm, inch, user defined | | | | Double | wr |
| Multi-line: yes | (Frame index - 1 ) * maxnumGlobMachAxes + axis number | | $MN_MM_NUM_GLOBAL_USER_FRAMES * maxnumGlobMachAxes | | |

| **mirrorImgActive** | $P_UIFR[x,y,MI] x = FrameNo,y=Axis | | | | PA |
|---|---|---|---|---|---|
| Mirroring enabled in settable zero offset<br>0 = mirroring not active<br>1 = mirroring active | | | | | |
| - | | | | UWord | wr |
| Multi-line: yes | (Frame index - 1 ) * maxnumGlobMachAxes + axis number | | $MN_MM_NUM_GLOBAL_USER_FRAMES * maxnumGlobMachAxes | | |

| **scaleFact** | $P_UIFR[x,y,SC] x = FrameNo,y=Axis | | | | PA |
|---|---|---|---|---|---|
| Scaling factor of settable zero offset | | | | | |
| - | | | | Double | wr |
| Multi-line: yes | (Frame index - 1 ) * maxnumGlobMachAxes + axis number | | $MN_MM_NUM_GLOBAL_USER_FRAMES * maxnumGlobMachAxes | | |

© Siemens AG 2004 All Rights Reserved

## 3.3.12 Area N, Mod. YFAFL: NCK instruction groups (Fanuc)

**OEM-MMC: Linkitem** /Nck/FunctionGroupingFanuc/...

All G functions currently configured for the channels are made available for reading by the NCK. They are configured via machine data. Since the G functions are organized in groups, only one of which can be active at a time, this module is organized as a table.
There are two columns for each G group. The 1st column lists the number of G functions in a group (/N/YFAFL/Gruppe_NUM), this corresponds to the number of rows in each subsequent column. This second column contains all the G functions belonging to a group (/N/YFAFL/Gruppe).
As a result, the data for a certain G group are calculated via a column offset. The column offset of each variable is:
2 * (G group number - 1)

The number of G groups is given in the variable "numGCodeGroupsFanuc" in area N / module Y. The resultant maximum column offset of the variables is thus 2 * numGCodeGroupsFanuc.

The G functions currently active are listed in area C / module SNCF.

| **Gruppe** | | | | | |
|---|---|---|---|---|---|
| Instruction group | | | | | |
| - | | | | String[16] | r |
| Multi-line: yes | Serial number | | /N/YFAFL/Gruppe_NUM | | |

| **Gruppe_NUM** | | | | | |
|---|---|---|---|---|---|
| Number of Fanuc-G functions in respective group | | | | | |
| - | | 0 | | UWord | r |
| Multi-line: yes | 1 | | 1 | | |

© Siemens AG 2004 All Rights Reserved

## 3.3.13 Area B, Mod. S: Mode-group-specific state data

**OEM-MMC: Linkitem** /Bag/State/...

During NC operation different internal states occur and system-specific data may change during operation. To distinguish those from system variables, they are classified as state data.

A distinction is made between:
- NCK-specific state data
- Mode-group-specific state data
- Channel-specific state data
- Drive-specific state data (FDD)
- Drive-specific state data (MSD)

| **opMode** | DB11, DBX6.0-6.2 | | | | |
|---|---|---|---|---|---|
| Active mode<br>0 = JOG<br>1 = MDA<br>2 = AUTO | | | | | |
| - | | | | UWord | r |
| Multi-line: no | | | | | |

| **readyActive** | DB11, DBX6.3 | | | | |
|---|---|---|---|---|---|
| Code whether mode group is ready<br>0 = not ready<br>1 = ready | | | | | |
| - | | | | UWord | r |
| Multi-line: no | | | | | |

| **resetActive** | DB11, DBX6.7 | | | | |
|---|---|---|---|---|---|
| Code whether all channels in mode group are in Reset<br>0 = not all channels in reset<br>1 = all channels in reset | | | | | |
| - | | | | UWord | r |
| Multi-line: no | | | | | |

© Siemens AG 2004 All Rights Reserved

# 3.4 State data of channel

## 3.4.1 Area C, Mod. M: Channel-specific machine data

**OEM-MMC: Linkitem** /Channel/Drive/...

Channel-specific machine data

| **MDS_CHAN_NAME** | MD 20000: CHAN_NAME | | | | |
|---|---|---|---|---|---|
| Channel name | | | | | |
| - | | | | String[16] | wr |
| Multi-line: no | | | 1 | | |

© Siemens AG 2004 All Rights Reserved

## 3.4.2 Area C, Mod. S: Channel-specific status data

**OEM-MMC: Linkitem** /Channel/State/...

During NC operation different internal states occur and system-specific data may change during operation. To distinguish those from system variables, they are classified as state data.

A distinction is made between:
- NCK-specific state data
- Mode-group-specific state data
- Channel-specific state data
- Drive-specific state data (FDD)
- Drive-specific state data (MSD)

| **aaAccLimA** | $AA_ACCLIMA[a] | | | | |
|---|---|---|---|---|---|
| Axial acceleration override in main run<br>1-200 | | | | | |
| - | 100 | 1 | 200 | UWord | r |
| Multi-line: yes | (Axis index ) | | numMachAxes | | |

| **aaEgActive** | $AA_EG_ACTIVE[a,b] | | | | |
|---|---|---|---|---|---|
| Electronic gear:<br>Link to the specified master axis is operative, i.e. activated.<br>0: Deactivated<br>1: Activated | | | | | |
| - | 0 | 0 | 1 | UWord | r |
| Multi-line: yes | (Axis index of the slave) * numMachAxes + (axis index of the master axis) + 1 | | numMachAxes * numMachAxes | | |

| **aaEgAx** | $AA_EG_AX[n,a] | | | | |
|---|---|---|---|---|---|
| Electronic gear:<br>Axis number of nth master axis (1-n).<br>(Axis index = axis number - 1)<br>1-numMachAxes | | | | | |
| - | 0 | 1 | numMachAxes | UWord | r |
| Multi-line: yes | (Axis index of slave axis) * 5 + (index of master axis) + 1 | | numMachAxes * 5 | | |

| **aaEgDenom** | $AA_EG_DENOM[a,b] | | | | |
|---|---|---|---|---|---|
| Electronic gear:<br>Denominator of link factor for the specified master axis.<br>The link factor of the gear is the result of $AA_EG_NUMERA[a,b]/$AA_EG_DENOM[a,b]. | | | | | |
| - | 1 | | | Double | r |
| Multi-line: yes | (Axis index of the slave axis) * numMachAxes + (axis index of the master axis) + 1 | | numMachAxes * numMachAxes | | |

© Siemens AG 2004 All Rights Reserved

| **aaEgNumera** | $AA_EG_NUMERA[a,b] | | | | |
|---|---|---|---|---|---|
| Electronic gear:<br>Numerator of link factor for the specified master axis.<br>The link factor of the gear is the result of $AA_EG_NUMERA[a,b]/$AA_EG_DENOM[a,b]. | | | | | |
| - | 0 | | | Double | r |
| Multi-line: yes | (Axis index of the slave axis) * numMachAxes + (axis index of the master axis) + 1 | | numMachAxes * numMachAxes | | |

| **aaEgNumLa** | $AA_EG_NUM_LA[a] | | | | |
|---|---|---|---|---|---|
| Electronic gear:<br>Number of master axes specified with EGDEF.<br>If the axis has not been specified with EGDEF as slave axis,<br>the value is 0.<br>0-5 | | | | | |
| - | 0 | 0 | 5 | UWord | r |
| Multi-line: yes | (Axis index of slave axis + 1) | | numMachAxes | | |

| **aaEgSyn** | $AA_EG_SYN[a,b] | | | | |
|---|---|---|---|---|---|
| Electronic gear:<br>Synchronous position for the specified master axis. | | | | | |
| mm, inch, degree, user defined | 0 | | | Double | r |
| Multi-line: yes | (Axis index of the slave axis) * numMachAxes + (axis index of the master axis) + 1 | | numMachAxes * numMachAxes | | |

| **aaEgSynFa** | $AA_EG_SYNFA[a] | | | | |
|---|---|---|---|---|---|
| Electronic gear:<br>Synchronous position for the slave axis. | | | | | |
| mm, inch, degree, user defined | 0 | | | Double | r |
| Multi-line: yes | (Axis index of slave axis + 1) | | numMachAxes | | |

| **aaEgType** | $AA_EG_TYPE[a,b] | | | | |
|---|---|---|---|---|---|
| Electronic gear:<br>Type of link for the specified master axis<br>0: Actual-value linkage<br>1: Setpoint linkage | | | | | |
| - | 0 | 0 | 1 | UWord | r |
| Multi-line: yes | (Axis index of the slave axis) * numMachAxes + (axis index of the master axis) + 1 | | numMachAxes * numMachAxes | | |

| **aaJerkLimA** | $AA_JERKLIMA[a] | | | | |
|---|---|---|---|---|---|
| Axial jerk override in run in<br>1-200 | | | | | |
| - | 100 | 1 | 200 | UWord | r |
| Multi-line: yes | (Axis index ) | | numMachAxes | | |

| **aaMeasP1Valid** | $AA_MEAS_P1_VALID | | | | |
|---|---|---|---|---|---|
| Save axial measuring point P1 for workpiece and<br>tool measurement<br>0: Clear axial measuring point<br>1: Write actual axial values to axial measuring point | | | | | |
| - | 0 | 0 | 1 | UDoubleword | wr |
| Multi-line: yes | Axis index | | numMachAxes | | |

© Siemens AG 2004 All Rights Reserved

| **aaMeasP2Valid** | $AA_MEAS_P2_VALID | | | | |
|---|---|---|---|---|---|
| Save axial measuring point P2 for workpiece and tool measurement<br>0: Clear axial measuring point<br>1: Write actual axial values to axial measuring point | | | | | |
| - | 0 | 0 | 1 | UDoubleword | wr |
| Multi-line: yes | Axis index | | numMachAxes | | |

| **aaMeasP3Valid** | $AA_MEAS_P3_VALID | | | | |
|---|---|---|---|---|---|
| Save axial measuring point P3 for workpiece and tool measurement<br>0: Clear axial measuring point<br>1: Write actual axial values to axial measuring point | | | | | |
| - | 0 | 0 | 1 | UDoubleword | wr |
| Multi-line: yes | Axis index | | numMachAxes | | |

| **aaMeasP4Valid** | $AA_MEAS_P4_VALID | | | | |
|---|---|---|---|---|---|
| Save axial measuring point P4 for workpiece and tool measurement<br>0: Clear axial measuring point<br>1: Write actual axial values to axial measuring point | | | | | |
| - | 0 | 0 | 1 | UDoubleword | wr |
| Multi-line: yes | Axis index | | numMachAxes | | |

| **aaMeasPoint1** | $AA_MEAS_POINT1 | | | | |
|---|---|---|---|---|---|
| 1st measuring point for workpiece and tool measurement | | | | | |
| mm, inch, user defined | 0 | | | Double | wr |
| Multi-line: yes | Axis index | | numMachAxes | | |

| **aaMeasPoint2** | $AA_MEAS_POINT2 | | | | |
|---|---|---|---|---|---|
| 2nd measuring point for workpiece and tool measurement | | | | | |
| mm, inch, user defined | | | | Double | wr |
| Multi-line: yes | Axis index | | numMachAxes | | |

| **aaMeasPoint3** | $AA_MEAS_POINT2 | | | | |
|---|---|---|---|---|---|
| 3rd measuring point for workpiece and tool measurement | | | | | |
| mm, inch, user defined | | | | Double | wr |
| Multi-line: yes | Axis index | | numMachAxes | | |

| **aaMeasPoint4** | $AA_MEAS_POINT4 | | | | |
|---|---|---|---|---|---|
| 4th measuring point for workpiece and tool measurement | | | | | |
| mm, inch, user defined | | | | Double | wr |
| Multi-line: yes | Axis index | | numMachAxes | | |

| **aaMeasSetangle** | $AA_MEAS_SETANGLE | | | | |
|---|---|---|---|---|---|
| Setpoint angle of an axis | | | | | |
| Degree, user defined | | | | Double | wr |
| Multi-line: yes | Axis index | | | | |

| **aaMeasSetpoint** | $AA_MEAS_SETPOINT | | | | |
|---|---|---|---|---|---|
| Setpoint position of edge, corner or hole | | | | | |
| mm, inch, user defined | | | | Double | wr |
| Multi-line: yes | Axis index | | numMachAxes | | |

© Siemens AG 2004 All Rights Reserved

| **aaMeasSpValid** | $AA_MEAS_SP_VALID | | | | |
|---|---|---|---|---|---|
| Save axial setpoint for workpiece and<br>tool measurement<br>0: Clear axial setpoint<br>1: Validate axial setpoint | | | | | |
| - | 0 | 0 | 1 | UDoubleword | wr |
| Multi-line: yes | Axis index | | numMachAxes | | |

| **aaVeloLimA** | $AA_VELOLIMA[a] | | | | |
|---|---|---|---|---|---|
| Axial velocity override in main run<br>1-200 | | | | | |
| - | 100 | 1 | 200 | UWord | r |
| Multi-line: yes | (Axis index ) | | numMachAxes | | |

| **acAlarmStat** | $AC_ALARM_STAT | | | | |
|---|---|---|---|---|---|
| !=0: Alarms are pending, the appropriate coded alarm reactions can be used as source for<br>"Extended stop and retract".<br>The data is bit-coded. Individual states can therefore be masked or<br>evaluated separately if necessary (bits excluded below produce a value of 0)<br>Bit2 = 1: NOREADY (active rapid deceleration + cancellation of servo enable)<br>Bit6 = 1: STOPBYALARM (ramp stop of all channel axes)<br>Bit9 = 1: SETVDI (VDI interface signal alarm setting)<br>Bit13 = 1: FOLLOWUPBYALARM (follow-up) | | | | | |
| - | 0 | | | UWord | r |
| Multi-line: yes | 1 | | 1 | | |

| **acAxCtSwA** | $AC_AXCTSWA[CTn] | | | | |
|---|---|---|---|---|---|
| Channel status of axis container rotation<br>TRUE: The channel has enabled rotation for the axis container<br>and rotation is still in progress.<br>FALSE: Axis container rotation is already finished | | | | | |
| - | 0 | 0 | 1 | UWord | r |
| Multi-line: yes | Container no. | | numContainer | | |

| **acDelt** | $AC_DELT | | | | |
|---|---|---|---|---|---|
| Stored distance-to-go of the path in the WCS after delete-distance-to-go of the path DELDTG for synchronous action<br>(Note: for SYNACT only) | | | | | |
| - | | | | Double | r |
| Multi-line: yes | 1 | | 1 | | |

| **acDtbb** | $AC_DTBB | | | | |
|---|---|---|---|---|---|
| Distance from the beginning of the block in the BCS (Note: SYNACT only) | | | | | |
| - | | | | Double | r |
| Multi-line: yes | 1 | | 1 | | |

| **acDtbw** | $AC_DTBW | | | | |
|---|---|---|---|---|---|
| Distance from the beginning of the block in the WCS (Note: for SYNACT only) | | | | | |
| - | | | | Double | r |
| Multi-line: yes | 1 | | 1 | | |

| **acDteb** | $AC_DTEB | | | | |
|---|---|---|---|---|---|
| Distance to the end of the block in the BCS (Note: for SYNACT only) | | | | | |
| - | | | | Double | r |
| Multi-line: yes | 1 | | 1 | | |

© Siemens AG 2004 All Rights Reserved

| **acDtepb** | $AC_DTEPB | | | | |
|---|---|---|---|---|---|
| Distance-to-go of infeed during oscillation in the BCS (Note: for SYNACT only ) | | | | | |
| - | | | | Double | r |
| Multi-line: yes | 1 | | 1 | | |

| **acDtepw** | $AC_DTEPW | | | | |
|---|---|---|---|---|---|
| Distance-to-go of infeed during oscillation in the WCS (Note: for SYNACT only) | | | | | |
| - | | | | Double | r |
| Multi-line: yes | 1 | | 1 | | |

| **acDtew** | $AC_DTEW | | | | |
|---|---|---|---|---|---|
| Distance to the end of the block in the WCS (Note: for SYNACT only) | | | | | |
| - | | | | Double | r |
| Multi-line: yes | 1 | | 1 | | |

| **acEsrTrigger** | $AC_ESR_TRIGGER | | | | |
|---|---|---|---|---|---|
| Activation of "NC-controlled ESR" | | | | | |
| - | 0 | 0 | 1 | UWord | r |
| Multi-line: yes | 1 | | 1 | | |

| **acFct0** | $AC_FCT0[x] x = PolynomNo | | | |
|---|---|---|---|---|
| a0-coefficient of the nth polynominal for the synchronous action SYNFCT / function FCTDEF n (Note: for SYNACT only) | | | | |
| - | | | Double | r |
| Multi-line: yes | Number of the polynominal | $MC_MM_NUM_FCTDEF_ELEMENTS | | |

| **acFct1** | $AC_FCT1[x] x = PolynomNo | | | |
|---|---|---|---|---|
| a1-coefficient of the nth polynominal for the synchronous action SYNFCT / function FCTDEF n (Note: for SYNACT only) | | | | |
| - | | | Double | r |
| Multi-line: yes | Number of the polynominal | $MC_MM_NUM_FCTDEF_ELEMENTS | | |

| **acFct2** | $AC_FCT2[x] x = PolynomNo | | | |
|---|---|---|---|---|
| a2-coefficient of the nth polynominal for the synchronous action SYNFCT / function FCTDEF n (Note: for SYNACT only) | | | | |
| - | | | Double | r |
| Multi-line: yes | Number of the polynominal | $MC_MM_NUM_FCTDEF_ELEMENTS | | |

| **acFct3** | $AC_FCT3[x] x = PolynomNo | | | |
|---|---|---|---|---|
| a3-coefficient of the nth polynominal for the synchronous action SYNFCT / function FCTDEF n (Note: for SYNACT only) | | | | |
| - | | | Double | r |
| Multi-line: yes | Number of the polynominal | $MC_MM_NUM_FCTDEF_ELEMENTS | | |

| **acFctll** | $AC_FCTLL[x] x = PolynomNo | | | |
|---|---|---|---|---|
| Lower limit of the nth polynominal for the synchronous action SYNFCT / function FCTDEF n (Note: for SYNACT only) | | | | |
| - | | | Double | r |
| Multi-line: yes | Number of the polynominal | $MC_MM_NUM_FCTDEF_ELEMENTS | | |

© Siemens AG 2004 All Rights Reserved

| **acFctul** | $AC_FCTUL[x] x = PolynomNo | | | | |
|---|---|---|---|---|---|
| Upper limit of the nth polynominal for the synchronous action SYNFCT / function FCTDEF n<br>(Note: for SYNACT only) | | | | | |
| - | | | | Double | r |
| Multi-line: yes | Number of the polynominal | | $MC_MM_NUM_FCTDEF_ELEMENTS | | |

| **aclwStat** | $AC_IW_STAT | | | | |
|---|---|---|---|---|---|
| Current position of machine<br>Bit-coded:<br>Bit 0: Tool inv. position<br>Bit 1: Axis 2/3 position<br>Bit 2: Axis 5 position<br>Bit 3-31: Not yet assigned | | | | | |
| - | 0 | | | UDoubleword | r |
| Multi-line: yes | 1 | | 1 | | |

| **aclwTu** | $AC_IW_TU | | | | |
|---|---|---|---|---|---|
| Current position of channel axes<br>Bit-coded:<br>Bit 0: Channel axis 1 position<br>Bit 1: Channel axis 2 position<br>Bit 2: Channel axis 3 position<br>Bit 3: Channel axis 4 position<br>... | | | | | |
| - | 0 | | | UDoubleword | r |
| Multi-line: yes | 1 | | 1 | | |

| **acJogCoord** | $AC_JOG_COORD | | | | |
|---|---|---|---|---|---|
| Setting the coordinate system for the manual travel<br>0: Work<br>1: SZS | | | | | |
| - | 0 | 0 | 1 | UDoubleword | wr |
| Multi-line: no | | | | | |

| **acMea** | $AC_MEA | | | | |
|---|---|---|---|---|---|
| Touch probe has switched<br>No. of touch probe | | | | | |
| - | 0 | 0 | 1 | UWord | r |
| Multi-line: yes | No. of touch probe | | 2 | | |

| **acMeasActPlane** | $AC_MEAS_ACT_PLANE | | | | |
|---|---|---|---|---|---|
| Plane setting for measurement calculation<br>0: G17, 1: G18, 2: G19 | | | | | |
| - | | 0 | 2 | UDoubleword | wr |
| Multi-line: yes | 1 | | 1 | | |

| **acMeasChbfr** | $AC_MEAS_CHBFR | | | | |
|---|---|---|---|---|---|
| Channel basic frame screen form for setting up the new frame | | | | | |
| - | 0 | 0 | | UDoubleword | wr |
| Multi-line: no | | | | | |

| **acMeasChsfr** | $AC_MEAS_CHSFR | | | | |
|---|---|---|---|---|---|
| System frame bit screen form for setting up the new frame | | | | | |
| - | 0 | 0 | | UDoubleword | wr |
| Multi-line: no | | | | | |

© Siemens AG 2004 All Rights Reserved

| **acMeasCornerAngle** | $AC_MEAS_CORNER_ANGLE | | | | |
|---|---|---|---|---|---|
| Calculated cutting angle of corner | | | | | |
| Degree, user defined | | | | Double | r |
| Multi-line: yes | 1 | | 1 | | |

| **acMeasCornerSetangle** | $AC_MEAS_CORNER_SETANGLE | | | | |
|---|---|---|---|---|---|
| User-selectable setpoint cutting angle of corner<br>Permissible input range between 0 and 180 degrees | | | | | |
| Degree, user defined | | 0 | 180.0 | Double | wr |
| Multi-line: yes | 1 | | 1 | | |

| **acMeasDiameter** | $AC_MEAS_DIAMETER | | | | |
|---|---|---|---|---|---|
| Calculated diameter | | | | | |
| mm, inch, user defined | | | | Double | r |
| Multi-line: yes | 1 | | 1 | | |

| **acMeasDirApproach** | $AC_MEAS_DIR_APPROACH | | | | |
|---|---|---|---|---|---|
| Approach direction towards workpiece<br>0: +x 1: -x 2: +y 3: -y 4: +z 5: -z | | | | | |
| - | | 0 | 5 | UDoubleword | wr |
| Multi-line: yes | 1 | | 1 | | |

| **acMeasDNumber** | $AC_MEAS_D_NUMBER | | | | |
|---|---|---|---|---|---|
| Selected tool edge number | | | | | |
| - | | 0 | | UDoubleword | wr |
| Multi-line: yes | 1 | | 1 | | |

| **acMeasFineTrans** | $AC_MEAS_FINE_TRANS | | | | |
|---|---|---|---|---|---|
| Correction in fine offset<br>0: Correction in coarse translation<br>1: Correction in fine translation | | | | | |
| - | | 0 | 1 | UDoubleword | wr |
| Multi-line: yes | 1 | | 1 | | |

| **acMeasFrameSelect** | $AC_MEAS_FRAME_SELECT | | | | |
|---|---|---|---|---|---|
| The frame calculated during workpiece measurement is<br>entered in the selected frame.<br>0: $P_SETFR<br>10.. 25: $P_CHBFR[0..15]<br>50.. 65: $P_NCBFR[0..15]<br>100.. 199: $P_UIFR[0..99]<br>1010..1025: $P_CHBFR[0..15]<br>1050..1065: $P_NCBFR[0..15] | | | | | |
| - | | 0 | 1065 | UDoubleword | wr |
| Multi-line: yes | 1 | | 1 | | |

| **acMeasInput** | $AC_MEAS_INPUT[n] | | | | |
|---|---|---|---|---|---|
| Data for the workpiece and tool measurement | | | | | |
| - | 0 | | | Double | wr |
| Multi-line: yes | Index | | 10 | | |

| **acMeasLatch** | $AC_MEAS_LATCH | | | | |
|---|---|---|---|---|---|
| Save measuring points for workpiece and tool measurement<br><br>0: Clear measuring point<br>1: Write current axial values to measuring point | | | | | |
| - | 0 | 0 | 1 | UDoubleword | wr |
| Multi-line: yes | Measuring point no. | | 4 | | |

© Siemens AG 2004 All Rights Reserved

| **acMeasNcbfr** | $AC_MEAS_NCBFR | | | | |
|---|---|---|---|---|---|
| Global basic frame screen form for setting up the new frame | | | | | |
| - | 0 | 0 | | UDoubleword | wr |
| Multi-line: no | | | | | |

| **acMeasP1Coord** | $AC_MEAS_P1_COORD | | | | |
|---|---|---|---|---|---|
| Coordinate system of the 1st measuring point<br>0: Work 1: BCS 2: MCS | | | | | |
| - | 0 | 0 | | UDoubleword | wr |
| Multi-line: no | | | | | |

| **acMeasP2Coord** | $AC_MEAS_P2_COORD | | | | |
|---|---|---|---|---|---|
| Coordinate system of the 2nd measuring point<br>0: Work 1: BCS 2: MCS | | | | | |
| - | 0 | 0 | | UDoubleword | wr |
| Multi-line: no | | | | | |

| **acMeasP3Coord** | $AC_MEAS_P3_COORD | | | | |
|---|---|---|---|---|---|
| Coordinate system of the 3rd measuring point<br>0: Work 1: BCS 2: MCS | | | | | |
| - | 0 | 0 | | UDoubleword | wr |
| Multi-line: no | | | | | |

| **acMeasP4Coord** | $AC_MEAS_P4_COORD | | | | |
|---|---|---|---|---|---|
| Coordinate system of the 4th measuring point<br>0: Work 1: BCS 2: MCS | | | | | |
| - | 0 | 0 | | UDoubleword | wr |
| Multi-line: no | | | | | |

| **acMeasPframe** | $AC_MEAS_PFRAME | | | | |
|---|---|---|---|---|---|
| Programmable frame is not included | | | | | |
| - | 0 | 0 | 1 | UDoubleword | wr |
| Multi-line: no | | | | | |

| **acMeasResults** | $AC_MEAS_RESULTS[n] | | | | |
|---|---|---|---|---|---|
| Measurement results | | | | | |
| - | | | | Double | r |
| Multi-line: yes | Index | | 10 | | |

| **acMeasScaleunit** | $AC_MEAS_SCALEUNIT | | | | |
|---|---|---|---|---|---|
| Unit of measurement for input and output values<br>0: Unit of measurement as configured<br>1: Unit of measurement in relation to active G code G70/G700/G71/G710 | | | | | |
| - | | 0 | | UDoubleword | wr |
| Multi-line: yes | 1 | | 1 | | |

| **acMeasSema** | $AC_MEAS_SEMA | | | | |
|---|---|---|---|---|---|
| Variable for disabling and enabling the measurement interface<br>0: Not assigned<br>1: Assigned | | | | | |
| - | 0 | 0 | 1 | UDoubleword | wr |
| Multi-line: yes | 1 | | 1 | | |

| **acMeasSetCoord** | $AC_MEAS_SET_COORD | | | | |
|---|---|---|---|---|---|
| Coordinate system of the set point<br>0: Work 1: BCS 2: MCS | | | | | |
| - | 0 | 0 | | UDoubleword | wr |
| Multi-line: no | | | | | |

© Siemens AG 2004 All Rights Reserved

| **acMeasTNumber** | $AC_MEAS_T_NUMBER | | | | |
|---|---|---|---|---|---|
| Selected tool number | | | | | |
| - | | 0 | | UDoubleword | wr |
| Multi-line: yes | 1 | | 1 | | |

| **acMeasToolLength** | $AC_MEAS_TOOL_LENGTH | | | | |
|---|---|---|---|---|---|
| Calculated tool length | | | | | |
| mm, inch, user defined | | | | Double | r |
| Multi-line: yes | 1 | | 1 | | |

| **acMeasToolMask** | $AC_MEAS_TOOL_MASK | | | | |
|---|---|---|---|---|---|
| Tool setting for the measurement calculation<br>Bit 0: Tool radius is not included in the calculation | | | | | |
| - | 0 | 0 | | UDoubleword | wr |
| Multi-line: no | | | | | |

| **acMeasType** | $AC_MEAS_TYPE | | | | |
|---|---|---|---|---|---|
| Measurement type specification<br>0: Default<br>1: x edge<br>2: y edge<br>3: z edge<br>4: Corner 1<br>5: Corner 2,<br>6: Corner 3<br>7: Corner 4<br>8: Hole<br>9: Shaft<br>10: Tool length<br>11: Tool diameter<br>12: Groove<br>13: Web<br>14: Actual value setting for geo and special axes<br>15: Actual value setting for special axes only<br>16: Edge_2P<br>17: Plane_Angles<br>18: Plane_Normal<br>19: Dimension_1<br>20: Dimension_2<br>21: Dimension_3 | | | | | |
| - | 0 | 0 | 21 | UDoubleword | wr |
| Multi-line: yes | 1 | | 1 | | |

| **acMeasUifr** | $AC_MEAS_UIFR | | | | |
|---|---|---|---|---|---|
| Settable data management frame for setting up the new frame | | | | | |
| - | 0 | 0 | 99 | UDoubleword | wr |
| Multi-line: no | | | | | |

© Siemens AG 2004 All Rights Reserved

| **acMeasValid** | $AC_MEAS_VALID | | | | |
|---|---|---|---|---|---|
| Validity bits for measurement input values<br>Bit 0: $AA_MEAS_POINT1[axis]<br>Bit 1: $AA_MEAS_POINT2[axis]<br>Bit 2: $AA_MEAS_POINT3[axis]<br>Bit 3: $AA_MEAS_POINT4[axis]<br>Bit 4: $AA_MEAS_SETPOINT[axis]<br>Bit 5: $AC_MEAS_WP_SETANGLE<br>Bit 6: $AC_MEAS_CORNER_SETANGLE<br>Bit 7: $AC_MEAS_T_NUMBER<br>Bit 8: $AC_MEAS_D_NUMBER<br>Bit 9: $AC_MEAS_DIR_APPROACH<br>Bit 10: $AC_MEAS_ACT_PLANE<br>Bit 11: $AC_MEAS_FRAME_SELECT<br>Bit 12: $AC_MEAS_TYPE<br>Bit 13: $AC_MEAS_FINE_TRANS | | | | | |
| - | | 0 | | UDoubleword | wr |
| Multi-line: yes | 1 | | 1 | | |

| **acMeasWpAngle** | $AC_MEAS_WP_ANGLE | | | | |
|---|---|---|---|---|---|
| Calculated workpiece position angle | | | | | |
| Degree, user defined | | | | Double | r |
| Multi-line: yes | 1 | | 1 | | |

| **acMeasWpSetangle** | $AC_MEAS_WP_SETANGLE | | | | |
|---|---|---|---|---|---|
| User-selectable setpoint workpiece position angle<br>Permissible input range less than +/- 90 degrees | | | | | |
| Degree, user defined | | -90.0 | 90.0 | Double | wr |
| Multi-line: yes | 1 | | 1 | | |

| **acOvr** | $AC_OVR | | | | |
|---|---|---|---|---|---|
| Path override for synchronous actions (Note: for SYNACT only) | | | | | |
| - | | | | Double | r |
| Multi-line: yes | 1 | | 1 | | |

| **acPathn** | $AC_PATHN | | | | |
|---|---|---|---|---|---|
| Normalized path parameter (Note: for SYNACT only) | | | | | |
| - | | | | Double | r |
| Multi-line: yes | 1 | | 1 | | |

| **acPlcOvr** | $AC_PLC_OVR | | | | |
|---|---|---|---|---|---|
| Path override for synchronized actions specified by the PLC | | | | | |
| - | 100 | 0 | | Double | r |
| Multi-line: yes | 1 | | 1 | | |

| **acPltbb** | $AC_PLTBB | | | | |
|---|---|---|---|---|---|
| Path length from the beginning of the block in the BCS (Note: for SYNACT only) | | | | | |
| - | | | | Double | r |
| Multi-line: yes | 1 | | 1 | | |

| **acPlteb** | $AC_PLTEB | | | | |
|---|---|---|---|---|---|
| Path length to the end of the block in the BCS (Note: for SYNACT only) | | | | | |
| - | | | | Double | r |
| Multi-line: yes | 1 | | 1 | | |

© Siemens AG 2004 All Rights Reserved

| **acProg** | $AC_PROG | | | | |
|---|---|---|---|---|---|
| Program status<br>(identical to progStatus but with coding that corresponds to $AC_PROG)<br>0: aborted (reset)<br>1: halted (stop)<br>2: running (active)<br>3: waiting<br>4: interrupted | | | | | |
| - | 0 | | | UWord | r |
| Multi-line: yes | 1 | | 1 | | |

| **acPRTimeA** | | | | | |
|---|---|---|---|---|---|
| For simulation: Estimation of program runtime in seconds - downtime | | | | | |
| s, user defined | | | | Double | wr |
| Multi-line: yes | 1 | | 1 | | |

| **acPRTimeM** | | | | | |
|---|---|---|---|---|---|
| For simulation: Estimation of program runtime in seconds - machining time | | | | | |
| s, user defined | | | | Double | wr |
| Multi-line: yes | 1 | | 1 | | |

| **acPtpSup** | | | | | |
|---|---|---|---|---|---|
| Cartesian point-to-point travel (PTP) is supported by transformation<br>0: Cart. PTP travel is not supported<br>1: Cart. PTP travel is supported | | | | | |
| - | 0 | 0 | 1 | UWord | r |
| Multi-line: yes | 1 | | 1 | | |

| **acStat** | $AC_STAT | | | | |
|---|---|---|---|---|---|
| Channel status<br>(identical to chanStatus but with coding that corresponds to $AC_STAT)<br>0: reset<br>1: interrupted<br>2: active | | | | | |
| - | 0 | | | UWord | r |
| Multi-line: yes | 1 | | 1 | | |

| **acSynaMem** | $AC_SYNA_MEM | | | | |
|---|---|---|---|---|---|
| Free memory for synchronous actions: Shows how many elements of the memory set with $MC_MM_NUM_SYNC_ELEMENTS are still free. | | | | | |
| - | | | | UWord | r |
| Multi-line: yes | 1 | | 1 | | |

| **actDLNumber** | ?? | | | | |
|---|---|---|---|---|---|
| Number of active total offset DL | | | | | |
| - | | | | UWord | r |
| Multi-line: yes | 1 | | | | |

| **actDNumber** | $P_TOOL | | | | |
|---|---|---|---|---|---|
| Number of active tool edge | | | | | |
| - | | 0 | 9 | UWord | r |
| Multi-line: no | | | | | |

| **actDNumberFanuc** | | | | | |
|---|---|---|---|---|---|
| With programming in ISO Dialect mode:<br>Offset memory number radius.<br>Assigned only in conjunction with ISO Dialect M external language. | | | | | |
| - | | | | UWord | r |
| Multi-line: yes | 1 | | 1 | | |

© Siemens AG 2004 All Rights Reserved

| **actDNumberS** | | | | | |
|---|---|---|---|---|---|
| Corresponds to actNumber for block search with calculation<br>Attention: This variable is available for protocolling block search events only, not for the Variable Service! | | | | | |
| - | | | | UWord | wr |
| Multi-line: yes | 1 | | 1 | | |

| **actDuploNumber** | | | | | |
|---|---|---|---|---|---|
| Duplo number of active tool | | | | | |
| - | 0 | | | UWord | r |
| Multi-line: no | | | 1 | | |

| **actFeedRateIpo** | | | | | |
|---|---|---|---|---|---|
| Actual value of the interpolation feedrate. The actual value is the feed actually moved with. (depends on the acceleration profiles, LookAhead, velocity limits etc. ) The variable 'feedRateIpoUnit' defines the physical unit. | | | | | |
| mm/min, inch/min, user defined | | | | Double | r |
| Multi-line: no | | | | | |

| **actFrameIndex** | $P_UIFRNUM | | | | |
|---|---|---|---|---|---|
| Index of the active set frame (index in G group 8 "Settable zero offset"). Frames 0 - 4 (corresponds to G500 ... G57) can be set in the standard version. The number of frames can be changed via machine data MM_NUM_USER_FRAMES.<br>0 = no frame selected<br>1 = G54<br>2 = G55<br>3 = G56<br>4 = G57<br>5 = G505<br>to<br>99 = G599 | | | | | |
| - | | | | UWord | r |
| Multi-line: no | | | | | |

| **actHNumberFanuc** | | | | | |
|---|---|---|---|---|---|
| With programming in ISO Dialect mode:<br>Offset memory number length.<br>Assigned only in conjunction with ISO Dialect M external language. | | | | | |
| - | | | | UWord | r |
| Multi-line: yes | 1 | | 1 | | |

| **acTime** | $AC_TIME | | | | |
|---|---|---|---|---|---|
| Time from the beginning of the block in seconds (Note: for SYNACT only) | | | | | |
| s | | | | Double | r |
| Multi-line: yes | 1 | | 1 | | |

| **acTimec** | $AC_TIMEC | | | | |
|---|---|---|---|---|---|
| Time from the beginning of the block in interpolation cycles (Note: for SYNACT only) | | | | | |
| IPO cycle | | | | Double | r |
| Multi-line: yes | 1 | | 1 | | |

| **acTimer** | $AC_TIMER[x] x = TimerNo | | | | |
|---|---|---|---|---|---|
| Time variable in seconds (Note: for SYNACT only) | | | | | |
| s | | | | Double | r |
| Multi-line: yes | Number of the time variable | | $MN_MM_NUM_AC_TIMER | | |

© Siemens AG 2004 All Rights Reserved

| **actIpoType** | | | | | |
|---|---|---|---|---|---|
| Active interpolation mode used for the path motion. This date corresponds to a large degree to the SNCF:ncFktBin for the first G-group. The value differs for automatically generated intermediate blocks only. This is e.g. the case if two lines are connected with an arc by the command RND. The value is the index of the active G-code (analog with SNCF:ncFktBin) | | | | | |
| - | | | | UWord | r |
| Multi-line: yes | 1 | | 1 | | |

| **actIpoTypeS** | | | | | |
|---|---|---|---|---|---|
| Active mode of interpolation applied during block searches.<br>This data is very similar to SNCF:ncFktBinS for the 1st G group.<br>Its value is different only in the case of automatically generated intermediate blocks,<br>such as when, for example, two straight lines are connected to an arc<br>by means of command RND.<br>The value is the index of the active G function (analogous to SNCF:ncFktBinS). | | | | | |
| - | | | | UWord | r |
| Multi-line: yes | 1 | | 1 | | |

| **actMasterToolHolderNo** | $P_MTHNUM, $AC_MTHNUM bzw. $P_MSNUM, $AC_MSNUM | | | | |
|---|---|---|---|---|---|
| Active number of the master tool holder.<br>Especially for $MC_RESET_MODE_MASK, Bit0=0, this is the value of<br>SETMS or SETMTH last programmed in the RESET status of the NCK.<br>Especially for $MC_RESET_MODE_MASK, Bit0=1, this is the value in the RESET status of the NCK for<br>$MC_SPIND_DEF_MASTER_SPIND (if $MC_TOOL_MANAGEMENT_TOOLHOLDER=0);<br>or $MC_TOOL_MANAGEMENT_TOOLHOLDER (if $MC_TOOL_MANAGEMENT_TOOLHOLDER > 0) | | | | | |
| - | | 1 | max. Anzahl der Kanalachsen | UWord | r |
| Multi-line: yes | 1 | | 1 | | |

| **actOriToolLength1** | | | | | |
|---|---|---|---|---|---|
| X component in workpiece coordinate system (WCS) of active tool length,<br>taking into account the tool orientation, incl. adapter data, mirroring and TCARR<br>(orientable toolholder). | | | | | |
| - | 0 | | | Double | r |
| Multi-line: yes | 1 | | 1 | | |

| **actOriToolLength2** | | | | | |
|---|---|---|---|---|---|
| Y component in workpiece coordinate system (WCS) of active tool length,<br>taking into account the tool orientation, incl. adapter data, mirroring and TCARR<br>(orientation-capable toolholder). | | | | | |
| - | 0 | | | Double | r |
| Multi-line: yes | 1 | | 1 | | |

| **actOriToolLength3** | | | | | |
|---|---|---|---|---|---|
| Z component in workpiece coordinate system (WCS) of active tool length,<br>taking into account the tool orientation, incl. adapter data, mirroring and TCARR<br>(orientation-capable toolholder). | | | | | |
| - | 0 | | | Double | r |
| Multi-line: yes | 1 | | 1 | | |

| **acTotalOvr** | $AC_TOTAL_OVR | | | | |
|---|---|---|---|---|---|
| Total path override for synchronized actions | | | | | |
| - | 100 | 0 | | Double | r |
| Multi-line: yes | 1 | | 1 | | |

© Siemens AG 2004 All Rights Reserved

| **actParts** | $AC_ACTUAL_PARTS | | | | |
|---|---|---|---|---|---|
| Total number of workpieces machined in current run:<br>This counter registers the number of workpieces<br>machined since it started.<br>When the required number is reached, the counter is set<br>to zero automatically. | | | | | |
| - | 0 | | | Double | wr |
| Multi-line: no | | | | | |

| **acTrafo** | $AC_TRAFO | | | | |
|---|---|---|---|---|---|
| Code number of the active transformation (encoded as for $AC_TRAFO) | | | | | |
| - | | | | UWord | r |
| Multi-line: yes | 1 | | 1 | | |

| **acTrafoParSet** | $AC_TRAFO_PARSET | | | | |
|---|---|---|---|---|---|
| Number of current transformation data record.<br>The variable is '0' if no transformation is active. | | | | | |
| - | 0 | | | UWord | r |
| Multi-line: yes | 1 | | 1 | | |

| **actTNumber** | $P_TOOLNO | | | | W1 |
|---|---|---|---|---|---|
| Number of active tool | | | | | |
| - | | 0 | 32000 | UWord | r |
| Multi-line: no | | | | | |

| **actTNumberLong** | | | | | |
|---|---|---|---|---|---|
| Number of the active tool using flat D-numbers with up to 8 digits | | | | | |
| - | | | | Long Integer | r |
| Multi-line: yes | 1 | | 1 | | |

| **actTNumberS** | | | | | |
|---|---|---|---|---|---|
| Corresponds to actTNumber for block search with calculation. Attention: This variable is available for protocolling the block search events only, not for the Variable Service! | | | | | |
| - | | | | UWord | wr |
| Multi-line: yes | 1 | | 1 | | |

| **actToolAdapterNum** | | | | | |
|---|---|---|---|---|---|
| Adapter number of current tool | | | | | |
| - | 0 | | | UWord | r |
| Multi-line: yes | 1 | | 1 | | |

| **actToolIdent** | | | | | W1 |
|---|---|---|---|---|---|
| Identifier of active tool | | | | | |
| - | "\0" | | | String[32] | r |
| Multi-line: no | | | 1 | | |

| **actToolLength1** | $P_TOOLL[1] | | | | W1 |
|---|---|---|---|---|---|
| Active tool length 1 | | | | | |
| mm, inch, user defined | | | | Double | r |
| Multi-line: no | | | | | |

| **actToolLength2** | $P_TOOLL[2] | | | | W! |
|---|---|---|---|---|---|
| Active tool length 2 | | | | | |
| mm, inch, user defined | | | | Double | r |
| Multi-line: no | | | | | |

© Siemens AG 2004 All Rights Reserved

| **actToolLength3** | $P_TOOLL[3] | | | | W1 |
|---|---|---|---|---|---|
| Active tool length 3 | | | | | |
| mm, inch, user defined | | | | Double | r |
| Multi-line: no | | | | | |

| **actToolRadius** | $P_TOOLR | | | | W1 |
|---|---|---|---|---|---|
| Active tool radius | | | | | |
| mm, inch, user defined | | | | Double | r |
| Multi-line: no | | | | | |

| **actTransform** | | | | | |
|---|---|---|---|---|---|
| Active transformation | | | | | |
| - | \0 | | | String[32] | r |
| Multi-line: yes | 1 | | 1 | | |

| **acVactB** | $AC_VACTB | | | | |
|---|---|---|---|---|---|
| Path velocity in basic coordinate system | | | | | |
| mm/min, inch/min, user defined | 0 | | | Double | r |
| Multi-line: yes | 1 | | 1 | | |

| **acVactw** | $AC_VACTW | | | | |
|---|---|---|---|---|---|
| Path velocity in the work piece coordinate system (Note: for SYNACT only) | | | | | |
| - | | | | Double | r |
| Multi-line: yes | 1 | | 1 | | |

| **acVc** | $AC_VC | | | | |
|---|---|---|---|---|---|
| Additive path feedrate correction value for synchronous actions (Note: for SYNACT only) | | | | | |
| - | | | | Double | r |
| Multi-line: yes | 1 | | 1 | | |

| **aLinkTransRate** | $A_LINK_TRANS_RATE | | | | |
|---|---|---|---|---|---|
| Link transfer rate<br>Number of bytes that can still be transferred in the current IPO cycle via the NCU link communication. | | | | | |
| - | | 0 | | UWord | r |
| Multi-line: yes | Spindle no. or toolholder no. | | max. Spindelnr oder WZ-Halter-Nr. | | |

| **allAxesRefActive** | DB21-28, DBX36.2 | | | | |
|---|---|---|---|---|---|
| Code specifying whether all axes are referenced<br>1 = all axes referenced<br>0 = at least 1 axis not referenced | | | | | |
| - | | | | UWord | r |
| Multi-line: no | | | | | |

| **allAxesStopped** | | | | | |
|---|---|---|---|---|---|
| Code specifying whether axes are in exact stop<br>0 = at least one axis is not in exact stop<br>1 = All axes in exact stop | | | | | |
| - | | | | UWord | r |
| Multi-line: no | | | | | |

| **aTcAckC** | $AC_TC_ACKC | | | | |
|---|---|---|---|---|---|
| Counter variable: aTcAckC (AcknowledgeCounter) is incremented by 1 every time the PLC acknowledges a tool management command. | | | | | |
| - | 0 | 0 | | UWord | wr |
| Multi-line: yes | 1 | | 1 | | |

© Siemens AG 2004 All Rights Reserved

| **aTcCmdC** | $AC_TC_CMDC | | | | |
|---|---|---|---|---|---|
| Counter variable: aTcCmdC (CoMmandCounter) is incremented by 1 every time the tool management outputs a command to the PLC. | | | | | |
| - | 0 | 0 | | UWord | wr |
| Multi-line: yes | 1 | | 1 | | |

| **aTcFct** | $AC_TC_FCT | | | | |
|---|---|---|---|---|---|
| Command number | | | | | |
| - | | | | UWord | r |
| Multi-line: yes | 1 | | 1 | | |

| **aTcLfn** | $AC_TC_LFN | | | | |
|---|---|---|---|---|---|
| Source location number of new tool | | | | | |
| - | | | | UWord | r |
| Multi-line: yes | 1 | | 1 | | |

| **aTcLfo** | $AC_TC_LFO | | | | |
|---|---|---|---|---|---|
| Source location number of old tool | | | | | |
| - | | | | UWord | r |
| Multi-line: yes | 1 | | 1 | | |

| **aTcLmyn** | $AC_TC_LMYN | | | | |
|---|---|---|---|---|---|
| Owner location number of the new tool | | | | | |
| - | | -1 | 32000 | UWord | r |
| Multi-line: yes | 1 | | 1 | | |

| **aTcLtn** | $AC_TC_LTN | | | | |
|---|---|---|---|---|---|
| Target location number of new tool | | | | | |
| - | | | | UWord | r |
| Multi-line: yes | 1 | | 1 | | |

| **aTcLto** | $AC_TC_LTO | | | | |
|---|---|---|---|---|---|
| Target location number of old tool | | | | | |
| - | | | | UWord | r |
| Multi-line: yes | 1 | | 1 | | |

| **aTcMfn** | $AC_TC_MFN | | | | |
|---|---|---|---|---|---|
| Source magazine of new tool | | | | | |
| - | | | | UWord | r |
| Multi-line: yes | 1 | | 1 | | |

| **aTcMfo** | $AC_TC_MFO | | | | |
|---|---|---|---|---|---|
| Source magazine number of old tool | | | | | |
| - | | | | UWord | r |
| Multi-line: yes | 1 | | 1 | | |

| **aTcMmyn** | $AC_TC_MMYN | | | | |
|---|---|---|---|---|---|
| Owner magazine number of the new tool | | | | | |
| - | | -1 | 32000 | UWord | r |
| Multi-line: yes | 1 | | 1 | | |

| **aTcMtn** | $AC_TC_MTN | | | | |
|---|---|---|---|---|---|
| Target magazine number of new tool | | | | | |
| - | | | | UWord | r |
| Multi-line: yes | 1 | | 1 | | |

© Siemens AG 2004 All Rights Reserved

| **aTcMto** | $AC_TC_MTO | | | | |
|---|---|---|---|---|---|
| Target magazine number of old tool | | | | | |
| - | | | | UWord | r |
| Multi-line: yes | 1 | | 1 | | |

| **aTcStatus** | $AC_TC_STATUS | | | | |
|---|---|---|---|---|---|
| Command status | | | | | |
| - | | | | UWord | r |
| Multi-line: yes | 1 | | 1 | | |

| **aTcThno** | $AC_TC_THNO | | | | |
|---|---|---|---|---|---|
| Number of toolholder for new tool | | | | | |
| - | | | | UWord | r |
| Multi-line: yes | 1 | | 1 | | |

| **aTcTno** | $AC_TC_TNO | | | | |
|---|---|---|---|---|---|
| T number of new tool | | | | | |
| - | | | | UWord | r |
| Multi-line: yes | 1 | | 1 | | |

| **basisFrameMask** | $P_CHBFRMASK | | | | |
|---|---|---|---|---|---|
| Display indicating which channel-specific basic frames are active<br>Every bit in the mask indicates whether the appropriate basic frame<br>is active. Bit0 = 1st basic frame, Bit1 = 2nd basic frame, etc. | | | | | |
| - | | | | UWord | r |
| Multi-line: yes | 1 | | 1 | | |

| **blockType** | $AC_BLOCKTYPE | | | | |
|---|---|---|---|---|---|
| Identifies the type of a block (programmed or generated internally)<br>0: No internally generated block<br>1: Internally generated block, but cannot be specified in detail<br>2: Block was generated on chamfering/rounding<br>3: Smooth approach and retraction (SAR)<br>4: Block was generated during tool offset<br>5: Block was generated on smoothing<br>6: Block was generated by TLIFT (tangential correction)<br>7: Block was generated during path segmentation<br>8: Block was generated by compile cycles | | | | | |
| - | 0 | 0 | 8 | UDoubleword | r |
| Multi-line: yes | 1 | | 1 | | |

© Siemens AG 2004 All Rights Reserved

| **blockTypeInfo** | $AC_BLOCKTYPEINFO | | | | |
|---|---|---|---|---|---|
| Detailed information on block type<br>The value range and the meaning of this variable depend on the current value of system variable blockType<br><br>With system variable blockTypeInfo, additional information on variable blockType can be requested.<br><br>Depending on the value of system variable blockType, different values are possible:<br><br>1. General internally generated block: blockType = 1<br>blockTypeInfo = 1000 and does not include any additional information.<br><br>2. Chamfer/round: blockType = 2<br>2001: straight<br>2002: circle<br><br>3. SAR: blockType = 3<br>3001: Approach with straight<br>3002: Approach with quadrant<br>3003: Approach with semicircle<br><br>4. Tool offset: blockType = 4<br>4001: Approach block after STOPRE<br>4002: Link sets when intersection not found<br>4003: Pointed circle on the inner corners (with TRACYL only)<br>4004: Bypass circle (or conic) on outer corners<br>4005: Approach blocks for offset suppression<br>4006: Approach blocks for reactivation of TRC<br>4007: Block separation when curvature is too high<br>4008: Compensation blocks for 3D front milling (tool vector \|\| plane vector)<br><br>5. Corner rounding: blockType = 5<br>5001: Rounding contour through G641<br>5002: Rounding contour through G642<br>5003: Rounding contour through G643<br>5004: Rounding contour through G644<br><br>6. TLIFT: blockType = 6<br>6001: TLIFT block with linear movement of the tangential axis and without retraction movement.<br>6002: TLIFT block with non-linear tangential axis (polynomial) and without retraction movement.<br>6003: TLIFT block with retraction movement; tangential axis movement and retraction movement start simultaneously.<br>6004: TLIFT block with retraction movement; tangential axis will only start, if certain retraction position has been reached.<br><br>7. Path segmentation: blockType = 7<br>7001: Programmed path segmentation without punching/nibbling to be active.<br>7002: Programmed path segmentation with active punching/nibbling.<br>7003: Automatic internally generated path segmentation.<br><br>8. Compile cycles: blockType = 8<br>In this case, system variable $AC_BLOCKTYPEINFO includes the ID of the compile cycles application that created the block. | | | | | |
| - | 0 | 0 | | UDoubleword | r |
| Multi-line: yes | 1 | | 1 | | |

| **chanAlarm** | DB21-28, DBX36.6 und DBX36.7 | | | | A2 |
|---|---|---|---|---|---|
| Code whether NCK alarm pending.<br>0 = no alarm in this channel<br>1 = alarm without stop<br>2 = alarm with stop | | | | | |
| - | | | | UWord | r |
| Multi-line: no | | | | | |

© Siemens AG 2004 All Rights Reserved

| **chanAxisNoGap** | | | | | |
|---|---|---|---|---|---|
| Display of existing axes, i.e. no axis gap in channel.<br>Bits 0-31 represent the axes of the channel.<br>Bitn = 0: Axis does not exist.<br>Bitn = 1: Axis does exist. | | | | | |
| - | | 0 | | UDoubleword | r |
| Multi-line: yes | 1 | | 1 | | |

| **changeAxConfCounter** | | | | | |
|---|---|---|---|---|---|
| A counter which is incremented if the axes configuration has changed. This is the case, if e.g. geometry axes are switched or axes have been changed between channels. The counter is set to 0 at PowerOn and it might overflow. You cannot be sure, that the axes configuration actually has changed when the counter is incremented. | | | | | |
| - | | | | UWord | r |
| Multi-line: yes | 1 | | 1 | | |

| **chanStatus** | DB21-28, DBX35.5-DBX35.7 | | | | K1 |
|---|---|---|---|---|---|
| Channel status<br>0 = RESET<br>1 = active<br>2 = interrupted | | | | | |
| - | | | | UWord | r |
| Multi-line: no | | | | | |

| **cIn** | $C_IN[n] | | | | |
|---|---|---|---|---|---|
| Signal from PLC to cycle (reserved for SIEMENS application, e.g. ShopMill/ManualTurn) | | | | | |
| - | | | | UWord | r |
| Multi-line: yes | No. of input signal | | 16 | | |

| **cmdDwellTime** | | | | | |
|---|---|---|---|---|---|
| Programmed dwell time<br>See timeOrRevolDwell | | | | | |
| - | 0 | 0 | | Double | r |
| Multi-line: yes | 1 | | 1 | | |

| **cmdFeedRateIpo** | | | | | |
|---|---|---|---|---|---|
| Desired feedrate of the interpolation feedrate. The physical unit is defined in the variable 'feedRateIpoUnit' | | | | | |
| mm/min, inch/min, user defined | | | | Double | r |
| Multi-line: no | | | | | |

| **cmdTrafoParSetS** | $P_TRAFO_PARSET | | | | |
|---|---|---|---|---|---|
| Number of programmed transformation data record for block search<br>The variable is '0' if no transformation is active. | | | | | |
| - | 0 | | | UWord | r |
| Multi-line: yes | 1 | | 1 | | |

| **cmdTrafoS** | $P_TRAFO | | | | |
|---|---|---|---|---|---|
| Code number of programmed transformation for block search<br>Coding as for variable $AC_TRAFO | | | | | |
| - | 0 | | | UWord | r |
| Multi-line: yes | 1 | | 1 | | |

| **corrBlActive** | | | | | |
|---|---|---|---|---|---|
| Incorrect block has occurred (correction block)<br>0 = no incorrect block<br>1 = incorrect block | | | | | |
| - | | | | UWord | r |
| Multi-line: no | | | | | |

© Siemens AG 2004 All Rights Reserved

| **cOut** | $C_OUT[n] | | | | |
|---|---|---|---|---|---|
| Signal from cycle to PLC (reserved for SIEMENS application, e.g. ShopMill/ManualTurn) | | | | | |
| - | | | | UWord | r |
| Multi-line: yes | No. of output signal | | 16 | | |

| **cycServRestricted** | | | | | |
|---|---|---|---|---|---|
| Code whether restricted cyclic variable service is available.<br><br>This is a privileged variable: Cyclic result acknowledgements for this variable are produced even if the cyclic services are no longer served by the NCK because of block cycle time problems. Caution: Privileged variables lose this characteristic if they are mixed with non-privileged variables in one request. -> Do not combine the variable cycServRestricted in a cluster with other variables!<br><br>0 = normal cycl. service<br>1 = no cyclic service (but acknowledgement) | | | | | |
| - | | | | UWord | r |
| Multi-line: no | | | | | |

| **delayFSt** | | | | | |
|---|---|---|---|---|---|
| Delay Feed Stop, Stop is delayed in the current program area<br>0: Stop in the current program area is effective immediately<br>1: Stop in the current program area is effective after a delay<br>2: Stop in the current program area is effective immediately (same as 0), although a stop delay area was programmed in the parts program.<br>(This means that the NCK could not switch on the stop delay area.) | | | | | |
| - | 0 | 0 | 2 | UWord | r |
| Multi-line: yes | 1 | | 1 | | |

| **direction** | | | | | |
|---|---|---|---|---|---|
| Traversing direction<br>0 = normal travel<br>1 = forward travel<br>2 = reverse travel<br>3 = reference point cycle<br>4 = stop state | | | | | |
| - | | | | UWord | r |
| Multi-line: no | | | | | |

| **extProgActive** | DB21-28, DBB32.0 | | | | |
|---|---|---|---|---|---|
| Flag indicating whether program execution from external is active.<br>0 = not active<br>1 = active | | | | | |
| - | | | | UWord | r |
| Multi-line: no | | | | | |

| **feedRateIpoOvr** | | | | | |
|---|---|---|---|---|---|
| Interpolation feedrate, override | | | | | |
| % | | | | Double | r |
| Multi-line: no | | | | | |

| **feedRateIpoUnit** | | | | | |
|---|---|---|---|---|---|
| Interpolation feedrate, units<br>0 = mm/min<br>1 = mm/rev<br>2 = inch/min<br>3 = inch/rev | | | | | |
| - | | | | UWord | r |
| Multi-line: no | | | | | |

© Siemens AG 2004 All Rights Reserved

| **findBlActive** | DB21-28, DBX33.4 | | | | K1 |
|---|---|---|---|---|---|
| Code whether block search is active.<br>0 = not active<br>1 = active | | | | | |
| - | | | | UWord | r |
| Multi-line: no | | | | | |

| **G0Mode** | $AC_G0MODE | | | | |
|---|---|---|---|---|---|
| G00 is active and $MC_G0_LINEAR_MODE is FALSE (Siemens mode) or $MC_EXTERN_G0_LINEAR_MODE is FALSE (ISO mode) and therefore non-linear interpolation is active with G0, i.e. the path axes are traversed as positioning axes.<br>0: G00 not active<br>1: G00 and linear interpolation active<br>2: G00 and non-linear interpolation active | | | | | |
| - | 0 | 0 | 2 | UWord | r |
| Multi-line: yes | 1 | | 1 | | |

| **ludAccCounter** | | | | | |
|---|---|---|---|---|---|
| Counter indicating that a new LUD ACC is available. If subprograms are called during an automatic program execution, a new set of LUDs becomes valid. In order to indicate to the MMC that it has to modify the display of the LUDs, respectively that the validity of the LUDs has changed, the variable 'ludAccCounter' is incremented. It is only necessary for the MMC to inquire a change of the variable's value, the value itself is of no importance. | | | | | |
| - | | | | UWord | r |
| Multi-line: no | | | | | |

| **machFunc** | DB11, DBX7.0-DBX7.2 | | | | |
|---|---|---|---|---|---|
| Active channel machine function<br>0 = none<br>1 = REPOS<br>2 = TEACH IN<br>3 = REF<br>4 = TEACH-REPOS<br>5 = TEACH-REF | | | | | |
| - | | | | UWord | r |
| Multi-line: no | | | | | |

| **markActiveList** | | | | | |
|---|---|---|---|---|---|
| Status array for the active marker in channel m.<br>The first element (markActiveList[1] ) of the array specifies the currently active marker number of this channel (channel m).<br>The second element ( markActiveList[2] ) specifies bit-coded whether channel m is still waiting for the mark to be reached in the other channels (channel n), in short "waiting status".<br><br>markActiveList[2] Bit-n == 1 Channel m is waiting for mark markActiveList[1] in channel n<br>markActiveList[2] Bit-n == 0 Channel n has already reached mark markActiveList[1], or channel m is not waiting for mark markActiveList[1] at all<br>markActiveList[1] == 0 Current channel m does not edit any wait marker<br>markActiveList[1] == 1..99 Current channel m is positioned on the wait marker with markActiveList[1]<br><br>markActiveList[2] Bit-n == 1 Channel m is waiting for mark markActiveList[1] in channel n<br>markActiveList[2] Bit-n == 0 Channel n has already reached mark markActiveList[1], or channel m is not waiting for mark markActiveList[1] at all | | | | | |
| - | 0 | 0 | 99 | UWord | r |
| Multi-line: yes | 1: Wait marker number<br>2: Bit-coded wait status for all channels | | 2 | | |

| **ncStartCounter** | | | | | |
|---|---|---|---|---|---|
| Counter for the NC-start key. Pressing this key increments the variable 'ncStartCounter'. The value of the variable can be ignored, the MMC must just inquire the change of the variable to see whether the start-key has been pressed. | | | | | |
| - | | | | UWord | r |
| Multi-line: no | | | | | |

© Siemens AG 2004 All Rights Reserved

| **numToolHolders** | $P_MAGNS | | | | |
|---|---|---|---|---|---|
| Number of tool holders/ spindles (buffer locations of the location type = spindle) from the magazine configuration of the TOA which are allocated to the channel. The number of tool holders / spindles is solely a function of the magazine configuration and does not change during an NC program execution.<br>Value = 0, if there is no magazine configuration or the TMMG (tool management magazines) is not present in the NC. | | | | | |
| - | 0 | 0 | numMachAxes | UWord | r |
| Multi-line: no | | | 1 | | |

| **numTraceProtocEventType** | | | | | |
|---|---|---|---|---|---|
| Logging: Number of standard event types | | | | | |
| - | | 0 | | UWord | r |
| Multi-line: yes | User No. (1-10) | | 10 | | |

| **numTraceProtocOemEvent Type** | $MM_PROTOC_NUM_ETP_OEM_TYP | | | | |
|---|---|---|---|---|---|
| Logging: Number of OEM event types | | | | | |
| - | | 0 | | UWord | r |
| Multi-line: yes | User No. (1-10) | | 10 | | |

| **paAccLimA** | $PA_ACCLIMA[a] | | | | |
|---|---|---|---|---|---|
| Axial acceleration override in run in<br>1-200 | | | | | |
| - | 100 | 1 | 200 | UWord | r |
| Multi-line: yes | (Axis index ) | | numMachAxes | | |

| **paJerkLimA** | $PA_JERKLIMA[a] | | | | |
|---|---|---|---|---|---|
| Axial jerk override in run in<br>1-200 | | | | | |
| - | 100 | 1 | 200 | UWord | r |
| Multi-line: yes | (Axis index ) | | numMachAxes | | |

| **paVeloLimA** | $PA_VELOLIMA[a] | | | | |
|---|---|---|---|---|---|
| Axial velocity override in run in<br>1-200 | | | | | |
| - | 100 | 1 | 200 | UWord | r |
| Multi-line: yes | (Axis index ) | | numMachAxes | | |

| **pEgBc** | $P_EG_BC[a] | | | | |
|---|---|---|---|---|---|
| Electronic gear:<br>Block change criterion. Important for EGON, EGONSYN<br>0: NOC Block change is performed immediately<br>1: IPOSTOP Block change is performed with setpoint synchronism<br>2: COARSE Block change is performed with "Synchronism coarse"<br>3: FINE Block change is performed with "Synchronism fine" | | | | | |
| - | 3 | 0 | 3 | UWord | r |
| Multi-line: yes | (Axis index of slave axis + 1) | | numMachAxes | | |

| **pMthSDC** | $P_MTHSDC | | | | |
|---|---|---|---|---|---|
| Master tool holder no. or master spindle no. is determined with reference to the active tool for the next D offset selection. This is important if the master spindle changes after the last tool change.<br>>0 Successful read access<br>0 No master tool holder or no master spindle available.<br>The next D offset works with TO.<br>-1 TMMG not available | | | | | |
| - | 0 | 0 | numMachAxes | UDoubleword | r |
| Multi-line: no | | | 1 | | |

© Siemens AG 2004 All Rights Reserved

| **pOffn** | $P_OFFN | | | | |
|---|---|---|---|---|---|
| Last programmed offset normal | | | | | |
| - | 0 | | | Double | r |
| Multi-line: no | | | | | |

| **progDLNumberS** | ?? | | | | |
|---|---|---|---|---|---|
| Corresponds to actDLNumber for block search with calculation<br>Caution: This variable is not available for the Variable Service,<br>but only for logging in the case of block search events!. | | | | | |
| - | | | | UWord | r |
| Multi-line: yes | 1 | | | | |

| **progDuploNumber** | | | | | |
|---|---|---|---|---|---|
| Duplo number of programmed tool (does not yet have to be active) | | | | | |
| - | 0 | | | UWord | r |
| Multi-line: no | | | 1 | | |

| **progStatus** | DB21-28, DBX35.0 - DBX35.4 | | | | K1 |
|---|---|---|---|---|---|
| Program status<br>1 = interrupted<br>2 = stopped<br>3 = in progress<br>4 = waiting<br>5 = aborted | | | | | |
| - | | | | UWord | r |
| Multi-line: no | | | | | |

| **progTNumber** | | | | | |
|---|---|---|---|---|---|
| Number of programmed tool | | | | | |
| - | | | | UWord | r |
| Multi-line: no | | | | | |

| **progTNumberLong** | | | | | |
|---|---|---|---|---|---|
| Number of the programmed tool using flat D-numbers with up to 8 digits | | | | | |
| - | 0 | | | Long Integer | r |
| Multi-line: yes | 1 | | 1 | | |

| **progToolIdent** | | | | | |
|---|---|---|---|---|---|
| Identifier of programmed tool (does not yet have to be active) | | | | | |
| - | "\0" | | | String[32] | r |
| Multi-line: no | | | 1 | | |

| **progWaitForEditUnlock** | | | | | |
|---|---|---|---|---|---|
| The interpreter is waiting until the editor has saved the specified parts<br>program and has enabled it by means of _N_F_MODE | | | | | |
| - | 0 | | | String[160] | r |
| Multi-line: yes | 1 | | 1 | | |

| **protAreaCounter** | | | | | |
|---|---|---|---|---|---|
| Counter is incremented by 1 every time a<br>protection zone (block PA) is modified | | | | | |
| - | | | | UWord | r |
| Multi-line: yes | 1 | | 1 | | |

© Siemens AG 2004 All Rights Reserved

| **protocUserActive** | $MM_PROTOC_USER_ACTIVE | | | | |
|---|---|---|---|---|---|
| Logging: Displays active users<br>0: User inactive<br>1: User active | | | | | |
| - | 0 | 0 | 1 | UWord | r |
| Multi-line: yes | User No. (1-10) | | 10 | | |

| **pTc** | $P_TC | | | | |
|---|---|---|---|---|---|
| The active orientatable toolholder | | | | | |
| - | 0 | 0 | | UWord | r |
| Multi-line: yes | 1 | | 1 | | |

| **pTcAng** | $P_TCANG[n] | | | | |
|---|---|---|---|---|---|
| The current angles of the two axes of an orientation-capable toolholder | | | | | |
| Degree | 0 | | | Double | r |
| Multi-line: yes | Axis no. of toolholder | | 2 | | |

| **pTcDiff** | $P_TCDIFF[n] | | | | |
|---|---|---|---|---|---|
| The difference between the exact and the actually used<br>angles of the two axes of<br>an orientation-capable toolholder | | | | | |
| Degree | 0 | | | Double | r |
| Multi-line: yes | Axis no. of toolholder | | 2 | | |

| **pTcNum** | $P_TCNUM | | | | |
|---|---|---|---|---|---|
| Number of available orientable tool carriers in the channel | | | | | |
| - | 0 | 0 | | UWord | r |
| Multi-line: yes | 1 | | 1 | | |

| **pTcSol** | $P_TCSOL | | | | |
|---|---|---|---|---|---|
| Number of solutions (configuration options for rotary<br>axes) on selection of an orientatable toolholder. The variable<br>value can be between 0 and 2, where 0 to 2 means either none,<br>1 solution or 2 solutions. | | | | | |
| - | 0 | 0 | | UWord | r |
| Multi-line: yes | 1 | | 1 | | |

| **pTcStat** | $P_TCSTAT | | | | |
|---|---|---|---|---|---|
| Specifies the status of an orientable tool carrier.<br>The variable is bit-coded with the following meanings:<br>0x0001 The first rotary axis is available<br>0x0002 The second rotary axis is available<br>0x0004 The angles used for the calculation come from an orientation in the frame direction<br>0x0008 The angles used for the calculation have been absolutely defined<br>0x0010 The polar axis angle is not defined in the case of orientation in the frame direction<br><br>0x1000 Only the tool can be rotated (kinematic type T)<br>0x1000 Only the workpiece can be rotated (kinematic type P)<br>0x4000 Tool and workpiece can be rotated (kinematic type M)<br><br>The bits stated here are not currently assigned. | | | | | |
| - | 0 | 0 | | UDoubleword | r |
| Multi-line: yes | 1 | | 1 | | |

| **pTCutMod** | $P_AD[2] | | | | |
|---|---|---|---|---|---|
| Angle of rotation for modification of edge position and cutting direction<br>Angle between 0 and 360 degrees | | | | | |
| Degree | 0 | 0 | 360 | Double | r |
| Multi-line: yes | 1 | | 1 | | |

© Siemens AG 2004 All Rights Reserved

| **pTCutModS** | $P_AD[2] | | | | |
|---|---|---|---|---|---|
| Angle of rotation for edge position and<br>cutting direction for block search<br>Angle between 0 and 360 degrees | | | | | |
| Degree | 0 | 0 | 360 | Double | r |
| Multi-line: yes | 1 | | 1 | | |

| **pToolO** | $P_TOOLO | | | | |
|---|---|---|---|---|---|
| Supplies the current tool orientation<br>The orientation vector is normalized, i.e. it has the value 1. | | | | | |
| - | 0 | -1 | 1 | Double | r |
| Multi-line: yes | 1: X component<br>2: Y component<br>3: Z component | | 3 | | |

| **rapFeedRateOvr** | | | | | |
|---|---|---|---|---|---|
| Rapid traverse override | | | | | |
| % | | | | Double | r |
| Multi-line: no | | | | | |

| **remainDwellTime** | | | | | |
|---|---|---|---|---|---|
| Remaining dwell time<br>See timeOrRevolDwell | | | | | |
| - | 0 | 0 | | Double | r |
| Multi-line: yes | 1 | | 1 | | |

| **reqParts** | $AC_REQUIRED_PARTS | | | | |
|---|---|---|---|---|---|
| Number of required workpieces (workpiece requirement):<br>The workpiece count at which the number of current<br>workpieces $AC_ACTUAL_PARTS is set to zero can be<br>defined in this counter. | | | | | |
| - | 0 | | | Double | wr |
| Multi-line: no | | | | | |

| **rotSys** | $AC_ROT_SYS | | | | |
|---|---|---|---|---|---|
| Reference system for orientation movements with cartesian manual traversal<br>0: Axis-specific manual traversal active<br>1: Cartesian manual traversal in basic coordinate system active<br>2: Cartesian manual traversal in workpiece coordinate system active<br>3: Cartesian manual traversal in tool coordinate system active | | | | | |
| - | 0 | 0 | 3 | UWord | r |
| Multi-line: yes | 1 | | 1 | | |

| **seruproMasterChanNo** | | | | | |
|---|---|---|---|---|---|
| The search type SERUPRO (search via program testing) may be<br>started simultaneously in several channels in order to start a channel grouping<br>correctly. A search target must be specified in one channel (master channel) in the grouping.<br>The other channels do not need a search target, they wait until they have reached a<br>stop condition and the master channel has reached the search target. These channels generally<br>stop at WAIT marks. The variable seruproMasterChanNo defines the master channel. | | | | | |
| - | 0 | 0 | numChannels | UWord | wr |
| Multi-line: yes | 1 | | 1 | | |

© Siemens AG 2004 All Rights Reserved

| **seruproMasterNcuNo** | | | | | |
|---|---|---|---|---|---|
| The search type SERUPRO (search via program testing) may be started simultaneously in several channels in order to start a channel grouping correctly. A search target must be specified in one channel (master channel) in the grouping. The other channels do not need a search target, they wait until they have reached a stop condition and the master channel has reached the search target. These channels generally stop at WAIT marks. The variable seruproMasterChanNo defines the master channel. seruproMasterNcuNo specifies the master channel in more detail if it is not on the active NCU. | | | | | |
| - | 0 | 0 | $MN_MM_LINK_NUM_OF_MODULES | UWord | wr |
| Multi-line: yes | 1 | | 1 | | |

| **specParts** | $AC_SPECIAL_PARTS | | | | |
|---|---|---|---|---|---|
| Number of current workpieces as defined by user: This counter enables the user to define his own workpiece count. The counter is reset to zero automatically only when the control system boots on defaults. | | | | | |
| - | 0 | | | Double | wr |
| Multi-line: no | | | | | |

| **splitBlock** | $AC_SPLITBLOCK | | | | |
|---|---|---|---|---|---|
| Identifier of internally splitted blocks<br>0: A BLOCK programmed unchanged<br>(a BLOCK generated by the compressor is regarded as programmed BLOCK):<br><>0: BLOCK was shortened or is an internally generated BLOCK; the following values are possible:<br>1: It is an internally generated BLOCK or a shortened original BLOCK<br>3: It is the last block in a chain of internally generated blocks or shortened original blocks. | | | | | |
| - | 0 | 0 | 2 | UDoubleword | r |
| Multi-line: yes | 1 | | 1 | | |

| **startLockState** | | | | | |
|---|---|---|---|---|---|
| Status of the global start disable.<br>Also see PI _N_STRTLK and _N_STRTUL.<br>0: No start disable<br>1: Start disable is switched on and program is not running<br>2: Start disable is switched on and program is running nevertheless<br>The NCK changes from 2->1 as soon as the program is stopped. | | | | | |
| - | 0 | 0 | 2 | UWord | r |
| Multi-line: yes | 1 | | 1 | | |

| **startRejectCounter** | | | | | |
|---|---|---|---|---|---|
| Counter that is incremented as soon as an NC start is rejected due to a global start disable (see _N_STRTLK) or a program-specific start disable (see _N_F_MODE). | | | | | |
| - | 0 | 0 | | UWord | r |
| Multi-line: yes | 1 | | 1 | | |

© Siemens AG 2004 All Rights Reserved

| stopCond | | |
|---|---|---|

NC in stop state
NC stop state

0 = No stop state
1 = NC not ready
2 = Mode group not ready
3 = EMERGENCY STOP active
4 = Alarm with stop active
5 = M0 / M1 active
6 = Block ended in single block mode
7 = NC stop active
8 = Read-in enable missing
9 = Feed enable missing
10 = Dwell time active
11 = Aux. funct. acknowledgement missing
12 = Axis enable missing
13 = Exact stop not reached
14 = Wait for positioning axis
15 = Wait for spindle
16 = Wait for another channel
17 = Wait for feed override
18 = NC block faulty or user alarm
19 = Wait for NC blocks from external source
20 = Wait for synchronized action
21 = Block search active
22 = Spindle enable missing
23 = Axis feed override 0
24 = Wait for tool change acknowledgement
25 = Gear ratio change
26 = Wait for position control
27 = Wait for thread first cut
28 = Reserved
29 = Wait for punching
30 = Wait for safe operation
31 = No channel ready; from SW 4.1
32 = Oscillation active; from SW 4.1 to SW 6.3
32 = Reserved; from SW 6.3
33 = Axis replacement active; Block change prevented because axis replacement was active from SW 4.1
34 = Axis container rotation; from SW 4.4
35 = AXCT: Slave axis active; Axis container replacement from SW 5.2
36 = AXCT: Master axis active; Axis container replacement from SW 5.2
37 = AXCT: Follow-up active; Axis container replacement from SW 5.2
38 = AXCT: Internal status change; Axis container replacement from SW 5.2
The following internal status changes may cause this waiting status:
- Switch on the position controller
  - Request the zero mark
  - Reference point approach active
- Parameter block change active
  - Measuring cycle system change active
  - In-process measurement active
  - Servo enable removed

39= AXCT: Axis/spindle disable; Axis container replacement from SW 5.2
40 = AXCT: Corr. motion active; Axis container replacement: overlaid motion from SW 5.2
41 = AXCT: Axis replacement active; Axis container replacement from SW 5.2
42 = AXCT axis interpolator active; Axis container replacement from SW 5.2
43 = Wait for compile cycle; from SW 5.2
44 = Access to system variables; from SW 5.3
45 = Search target found; block search has found search target and NCK has stopped.
46 = Rapid retraction activated; from SW 6.2.
47 = AXCT: Wait for spindle stop; axis container replacement from SW 6.2.
48 = Machine data match; New config, from SW 6.2.
49 = Axis replacement: coupled axis; from SW 6.3
50 = Axis replacement: Liftfast active; from SW 6.3
51 = Axis replacement: New config active; from SW 6.3
52 = Axis replacement: AXCTSW active; from SW 6.3
53 = Axis replacement: Waitp active; from SW 6.3
54 = Axis in another channel; axis replacement from SW 6.3

© Siemens AG 2004 All Rights Reserved

| | | | | | |
|---|---|---|---|---|---|
| 55 = Axis replacement: axis PLC axis; from SW 6.3<br>56 = Axis replacement: axis reciprocating axis; from SW 6.3<br>57 = Axis replacement: axis jog axis; from SW 6.3<br>58 = Axis replacement: command axis; from SW 6.3<br>59 = Axis replacement: axis OEM axis; from SW 6.3<br>60 = Linked slave axis; axis replacement from SW 6.3<br>61 = Coupled-motion slave axis; axis replacement from SW 6.3<br>62 = Linked slave axis; axis replacement from SW 6.3<br>63 = Stop: associated M0 active; from SW 6.3<br>64 = Stop: associated M1 active; from SW 6.3<br>65 = Axis at limit stop; from SW 6.3<br>66 = Master-slave changeover active; from SW 6.3<br>67 = Axis replacement: axis single axis; from SW 6.3<br>68 = Stop run has reached the stop block; from SW 7.1<br>69 = Synchronous run: synchronous spindle; from SW 6.4<br>70 = Deactivation position of synchronous spindle; from SW 6.4<br>71 = Wait for release of transformation axis; from SW 7.1 | | | | | |
| - | | | | UWord | r |
| Multi-line: no | | | | | |

| **stopCondPar** | | | | | |
|---|---|---|---|---|---|
| Supplementary parameters for variable stopCond.<br>stopCondPar has the default value 0. If stopCond takes one of the following values, variable stopCondPar contains supplementary information: | | | | | |
| - | | | | UWord | r |
| Multi-line: no | | | | | |

| **stopRunActive** | | | | | |
|---|---|---|---|---|---|
| Stop run active<br>0 = inactive<br>1 = active | | | | | |
| - | 0 | 0 | 1 | UWord | r |
| Multi-line: yes | 1 | | 1 | | |

| **stopRunCounter** | | | | | |
|---|---|---|---|---|---|
| Modification counter for stop run.<br>This is always incremented when the NCK has stopped at a stop block. | | | | | |
| - | 0 | 0 | | UWord | r |
| Multi-line: yes | 1 | | 1 | | |

| **suppProgFunc** | | | | | |
|---|---|---|---|---|---|
| Disabling of language commands<br>Bit0 = 0: SBLOF command is active<br>Bit0 = 1: SBLOF command is disabled | | | | | |
| - | Bit0 = 0 | | | UWord | wr |
| Multi-line: yes | 1 | | 1 | | |

| **threadPitch** | | | | | |
|---|---|---|---|---|---|
| Current lead | | | | | |
| - | 0 | 0 | | Double | r |
| Multi-line: yes | 1 | | 1 | | |

| **threadPitchS** | | | | | |
|---|---|---|---|---|---|
| Current lead during search run | | | | | |
| - | 0 | 0 | | Double | r |
| Multi-line: yes | 1 | | 1 | | |

© Siemens AG 2004 All Rights Reserved

| **timeOrRevolDwell** | | | | | |
|---|---|---|---|---|---|
| Dwell time unit in seconds or spindle revolutions<br>0: cmdDwellTime and remainDwellTime in seconds<br>1: cmdDwellTime and remainDwellTime in spindle revolutions | | | | | |
| - | 0 | 0 | 1 | UWord | r |
| Multi-line: yes | 1 | | 1 | | |

| **timeS** | $AC_TIMES | | | | |
|---|---|---|---|---|---|
| Time after a block change between programmed blocks in seconds<br>Each programmed block can be divided up into a chain of part blocks that are processed one after the other.<br>O n l y with the 1st cycle of the 1st block of the chain, timeS is set to zero and then counted up in seconds. Therefore, the variable enables time measurements throughout the entire block chain. | | | | | |
| s, user defined | 0 | 0 | | Double | r |
| Multi-line: yes | 1 | | 1 | | |

| **timeSC** | $AC_TIMESC | | | | |
|---|---|---|---|---|---|
| Time after a block change between programmed blocks in IPO cycles<br>Each programmed block can be divided up into a chain of part blocks that are processed one after the other.<br>Only (!) with the 1st cycle of the 1st block of the chain, timeSC is set to zero and then counted up in seconds. Therefore, the variable enables time measurements throughout the entire block chain. | | | | | |
| - | 0 | 0 | | Double | r |
| Multi-line: yes | 1 | | 1 | | |

| **toolCounter** | | | | | |
|---|---|---|---|---|---|
| Counter of the changes of the tool data assigned to a channel. The counter is incremented each time a tool data is changed.<br>All changes of tool data made by BTSS, part programs, INI files and by the Tool Management software are considered.<br>Tool data are tool compensations, grinding-specific tool parameters, OEM tool parameters and Tool Managment data including magazine data.<br>There is one exception: the present tool-in-use-time, since it is changed in each IPO cycle. | | | | | |
| - | | | | UWord | r |
| Multi-line: yes | 1 | | 1 | | |

| **toolCounterC** | | | | | |
|---|---|---|---|---|---|
| Counter for modifications to tool offset data assigned to the channel (analog toolCounter). | | | | | |
| - | | | | UWord | r |
| Multi-line: yes | 1 | | 1 | | |

| **toolCounterM** | | | | | |
|---|---|---|---|---|---|
| Counter for modifications to magazine data assigned to the channel (analog toolCounter). | | | | | |
| - | | | | UWord | r |
| Multi-line: yes | 1 | | 1 | | |

© Siemens AG 2004 All Rights Reserved

| **toolHolderData** | GETSELT, GETEXET | | | | |
|---|---|---|---|---|---|
| Data for each tool holder/spindle from the magazine configuration of the TOA which is assigned to the channel.<br><br>There is a set of numToolHolderParams parameters for each tool holder.<br>Currently there are the three parameters P1, P2 and P3.<br>There are numToolHolders tool holders. The number of tool holders in this list is solely a function of the magazine configuration and does not change while an NC program runs.<br>- P1: THNo ToolHolderNumber / SpindleNumber<br>(In the language commands of the NC program,<br>corresponds to the address extension<br><n> from T<n>=... or M<n>=6 with explicit notation;<br>in the magazine configuration, corresponds to the location<br>type index of the associated buffer location of the location<br>type = spindle.)<br>- P2: SelTno T number of the selected tool with<br>reference to the tool holder / spindle with the number of THNo<br>(The same TNo would also return the language command GETSELT.)<br>The value 0 indicates that no tool is selected with<br>reference to the tool holder. For further behavior see the description of GETSELT.<br>- P3: ExeTno TNumber of the tool to be loaded / loaded with<br>reference to the tool holder / the spindle with the number THNo from<br>the point of view of the NC program.<br>When working without M6, the same TNumber is in SelTno and ExeTno.<br>(The same TNumber would also return the language command GETEXET.)<br>The value 0 indicates that no tool is to be loaded / is loaded<br>with reference to the tool holder. For further behavior see the description of GETEXET.<br><br>An array access is possible to toolHolderData, with which the data of all numToolHolders tool holders can be read at one time.<br>0 will be returned for line 1 only, if tool magazine management is not active. | | | | | |
| - | 0 | 0 | | Double | r |
| Multi-line: yes | The line index addresses the parameters of the tool holder and the tool holder itself:<br>Line index = (ElementNo - 1) * numToolHolderParams + PNo<br><br>With: ElementNo 1 to numToolHolders;<br>The ElementNo is the list element no of the tool holder in this list.<br><br>PNo: Parameter number from 1 to numToolHolderParams<br>numToolHolderParams from range N, block Y, global system data | | numToolHolderParams * numToolHolders | | |

| **totalParts** | $AC_TOTAL_PARTS | | | | |
|---|---|---|---|---|---|
| Total number of all machined workpieces:<br>This counter specifies the number of workpieces machined since it was started. The counter is automatically set to zero only if the control system boots on defaults. | | | | | |
| - | 0 | | | Double | wr |
| Multi-line: no | | | | | |

| **transfActive** | DB21-28, DBX33.6 | | | | K1, M1 |
|---|---|---|---|---|---|
| Transformation active<br>0 = not active<br>1 = active | | | | | |
| - | | | | UWord | r |
| Multi-line: no | | | | | |

© Siemens AG 2004 All Rights Reserved

| **transSys** | $AC_TRANS_SYS | | | | |
|---|---|---|---|---|---|
| Reference system for translation with cartesian manual traversal<br>0: Axis-specific manual traversal active<br>1: Cartesian manual traversal in basic coordinate system active<br>2: Cartesian manual traversal in workpiece coordinate system active<br>3: Cartesian manual traversal in tool coordinate system active | | | | | |
| - | 0 | 0 | 3 | UWord | r |
| Multi-line: yes | 1 | | 1 | | |

| **vaEgSyncDiff** | $VA_EG_SYNCDIFF[a] | | | | |
|---|---|---|---|---|---|
| Electronic gear:<br>Synchronism deviation (actual values). The comparison between this value and $MA_COUPLE_POS_TOL_... determines whether the appropriate "Synchronism" VDI signal is set. | | | | | |
| mm, inch, degree, user defined | 0 | | | Double | r |
| Multi-line: yes | (Axis index of slave axis + 1) | | numMachAxes | | |

| **vaEgSyncDiffS** | $VA_EG_SYNCDIFF_S[a] | | | | |
|---|---|---|---|---|---|
| Electronic gear:<br>Synchronous run difference (actual values) with sign. Whether the corresponding VDI signal "synchronous run" is set depends upon the comparison of this value with $MA_COUPLE_POS_TOL_.... | | | | | |
| mm, inch, degree, user defined | 0 | | | Double | r |
| Multi-line: yes | (Axis index of the following axis) | | numMachAxes | | |

© Siemens AG 2004 All Rights Reserved

### 3.4.3 Area C, Mod. SINF: Part-program-specific status data

**OEM-MMC: Linkitem** /Channel/ProgramModification/...

During automatic execution of a part program different parameters can influence the type of machining. The current status data for the selected part program are combined in module SINF. The status data must only be changed via the PLC. interface.

| **DRFActive** | | | | | |
|---|---|---|---|---|---|
| DRF active<br>0 = not active<br>1 = active | | | | | |
| - | | | | UWord | r |
| Multi-line: no | | | | | |

| **feedStopActive** | | | | | |
|---|---|---|---|---|---|
| Feed disable<br>0 = not active<br>1 = active | | | | | |
| - | | | | UWord | r |
| Multi-line: no | | | | | |

| **ipoBlocksOnly** | | | | | |
|---|---|---|---|---|---|
| Display traversing blocks<br>0 = normal block transfer<br>1 = exclusively traversing blocks | | | | | |
| - | | | | UWord | r |
| Multi-line: no | | | | | |

| **optAssStopActive** | | | | | |
|---|---|---|---|---|---|
| Associated M01 selected<br>0: Not selected<br>1: Selected | | | | | |
| - | 0 | | | UWord | r |
| Multi-line: yes | 1 | | 1 | | |

| **optStopActive** | | | | | |
|---|---|---|---|---|---|
| M01 selected<br>0 = not selected<br>1 = selected | | | | | |
| - | | | | UWord | r |
| Multi-line: no | | | | | |

| **progTestActive** | DB21-28, DBX1.7 | | | | K1 |
|---|---|---|---|---|---|
| Program test<br>0 = not active<br>1 = active | | | | | |
| - | | | | UWord | r |
| Multi-line: no | | | | | |

© Siemens AG 2004 All Rights Reserved

| **rapFeedRateOvrActive** | | | | | |
|---|---|---|---|---|---|
| ROV rapid traverse override<br>0 = not active<br>1 = active | | | | | |
| - | | | | UWord | r |
| Multi-line: no | | | | | |

| **singleBlockActive** | | | | | |
|---|---|---|---|---|---|
| Single block, SBL<br>0 = no single block<br>1 = SBL 1<br>2 = SBL 2 | | | | | |
| - | | | | UWord | r |
| Multi-line: no | | | | | |

| **singleBlockType** | | | | | |
|---|---|---|---|---|---|
| Single block mode<br>1 = interpolation single block<br>2 = decoder single block | | | | | |
| - | | | | UWord | wr |
| Multi-line: no | | | | | |

| **skipLevel0Active** | | | | | |
|---|---|---|---|---|---|
| Info whether skip level /0 is activated.<br>0: Skip level /0 not active<br>1: Skip level /0 active | | | | | |
| - | 0 | 0 | 1 | UWord | r |
| Multi-line: no | | | | | |

| **skipLevel1Active** | | | | | |
|---|---|---|---|---|---|
| Info whether skip level /1 is activated<br>0: Skip level /1 not active<br>1: Skip level /1 active | | | | | |
| - | 0 | 0 | 1 | UWord | r |
| Multi-line: no | | | | | |

| **skipLevel2Active** | | | | | |
|---|---|---|---|---|---|
| Info whether skip level /2 is activated<br>0: Skip level /2 not active<br>1: Skip level /2 active | | | | | |
| - | 0 | 0 | 1 | UWord | r |
| Multi-line: no | | | | | |

| **skipLevel3Active** | | | | | |
|---|---|---|---|---|---|
| Info whether skip level /3 is activated<br>0: Skip level /3 not active<br>1: Skip level /3 active | | | | | |
| - | 0 | 0 | 1 | UWord | r |
| Multi-line: no | | | | | |

| **skipLevel4Active** | | | | | |
|---|---|---|---|---|---|
| Info whether skip level /4 is activated<br>0: Skip level /4 not active<br>1: Skip level /4 active | | | | | |
| - | 0 | 0 | 1 | UWord | r |
| Multi-line: no | | | | | |

© Siemens AG 2004 All Rights Reserved

| **skipLevel5Active** | | | | | |
|---|---|---|---|---|---|
| Info whether skip level /5 is activated<br>0: Skip level /5 not active<br>1: Skip level /5 active | | | | | |
| - | 0 | 0 | 1 | UWord | r |
| Multi-line: no | | | | | |

| **skipLevel6Active** | | | | | |
|---|---|---|---|---|---|
| Info whether skip level /6 is activated.<br>0: Skip level /6 not active<br>1: Skip level /6 active | | | | | |
| - | 0 | 0 | 1 | UWord | r |
| Multi-line: no | | | | | |

| **skipLevel7Active** | | | | | |
|---|---|---|---|---|---|
| Info whether skip level /7 is activated.<br>0: Skip level /7 not active<br>1: Skip level /7 active | | | | | |
| - | 0 | 0 | 1 | UWord | r |
| Multi-line: no | | | | | |

| **skipLevel8Active** | | | | | |
|---|---|---|---|---|---|
| Info whether skip level /8 is activated.<br>0: Skip level /8 not active<br>1: Skip level /8 active | | | | | |
| - | 0 | 0 | 1 | UWord | r |
| Multi-line: no | | | | | |

| **skipLevel9Active** | | | | | |
|---|---|---|---|---|---|
| Info whether skip level /9 is activated.<br>0: Skip level /9 not active<br>1: Skip level /9 active | | | | | |
| - | 0 | 0 | 1 | UWord | r |
| Multi-line: no | | | | | |

| **trialRunActive** | DB21-28, DBX0.6 | | | | V1 |
|---|---|---|---|---|---|
| Dry run feedrate<br>0 = not active<br>1 = active | | | | | |
| - | | | | UWord | r |
| Multi-line: no | | | | | |

© Siemens AG 2004 All Rights Reserved

## 3.4.4 Area C, Mod. SPARP: Part program information

**OEM-MMC: Linkitem** /Channel/ProgramInfo/...

This module contains information on the currently active part programm in the respective channel.

| **absoluteBlockBufferName** | | | | | |
|---|---|---|---|---|---|
| File name with path of upload buffer in which display blocks are stored<br><br>Empty string: Function is deactivated | | | | | |
| - | | | | String[128] | r |
| Multi-line: yes | 1 | | 1 | | |

| **absoluteBlockBufferPreview** | | | | | |
|---|---|---|---|---|---|
| Part of content of file absoluteBlockBufferName.<br>The desired content of the variables is set by $MC_MM_ABSBLOCK_BUFFER_CONF.<br>In principle, only complete parts program blocks are entered.<br>If the desired number of previous blocks are not present, then an empty block ("LF") is entered in that place.<br>If there is insufficient space for all parts program blocks, then the previous blocks are first replaced by empty blocks ("LF"), if this is still insufficient, the blocks at the end are also omitted. | | | | | |
| - | | | | String[198] | r |
| Multi-line: yes | 1 | | 1 | | |

| **absoluteBlockCounter** | | | | | |
|---|---|---|---|---|---|
| Modification counter for display information in the upload buffer | | | | | |
| - | 0 | 0 | | UWord | r |
| Multi-line: yes | 1 | | 1 | | |

| **actBlock** | | | | | |
|---|---|---|---|---|---|
| Current part program block.<br>If search run is active, then search run block is displayed.<br>With DISPLOF an empty string is returned; with search run the subroutine call. | | | | | |
| - | | | | String[66] | r |
| Multi-line: yes | 1 | | 1 | | |

| **actBlockA** | | | | | |
|---|---|---|---|---|---|
| Current part program block.<br>If search run is active, then search run block is displayed.<br>Display is always made irrespective of DISPLOF. | | | | | |
| - | | | | String[66] | r |
| Multi-line: yes | 1 | | 1 | | |

| **actBlockI** | | | | | |
|---|---|---|---|---|---|
| Current part program in the interpreter.<br>Display is always made irrespective of DISPLOF. | | | | | |
| - | | | | String[66] | r |
| Multi-line: yes | 1 | | 1 | | |

© Siemens AG 2004 All Rights Reserved

| **actLineNumber** | | | | | |
|---|---|---|---|---|---|
| Line number of the current NC instruction (starting at 1)<br>0: before program start<br>-1: not available due to an error<br>-2: not available because of DISPLOF | | | | | |
| - | | | | Long Integer | r |
| Multi-line: yes | 1 | | 1 | | |

| **block** | | | | | |
|---|---|---|---|---|---|
| To display the currently active part programm, NCK supplies 3 ascii-blocks of the part programm in one single variable job (last, current and next block). That means the variable 'block' consists of a maximum of 3 lines:<br>Line index 1: string of the last block<br>Line index 2: string of the current block<br>Line index 3: string of the next block<br><br>To gain consistent information, all 3 array elements must be processed in one variable request. This is why the maximum string length of each array element is limited to 66 characters. | | | | | |
| - | | | | String[66] | r |
| Multi-line: yes | Block index, 1 = last, 2 = current, 3 = next block | | 3 | | |

| **blockNoStr** | | | | | |
|---|---|---|---|---|---|
| Block number | | | | | |
| - | | | | String[12] | r |
| Multi-line: no | | | | | |

| **circleCenter** | | | | | |
|---|---|---|---|---|---|
| Center of the circle (WCS) | | | | | |
| - | | | | Double | r |
| Multi-line: yes | Line index 1 - 3 for geometry axis and only effective for G02 or G03 | | 3 | | |

| **circleCenterS** | | | | | |
|---|---|---|---|---|---|
| Corresponds to circleCenter for search with calculation<br>Attention: This variable is available for protocolling the block search events only, not for the Variable Service! | | | | | |
| - | 0 | | | Double | r |
| Multi-line: yes | No. of the geometry axis | | 3 | | |

| **circlePlane** | | | | | |
|---|---|---|---|---|---|
| The vector perpendicular to the circular plane (axial) is output<br>to enable identification of the position of a circle in space | | | | | |
| - | | | | Double | r |
| Multi-line: yes | No. of geo axis | | 3 | | |

| **circlePlaneS** | | | | | |
|---|---|---|---|---|---|
| The vector perpendicular to the circular plane (axial) is output<br>to enable identification of the position of a circle in space | | | | | |
| - | | | | Double | r |
| Multi-line: yes | No. of geo axis | | 3 | | |

| **circleRadius** | | | | | |
|---|---|---|---|---|---|
| Radius of the circle (only effective for G02/G03) | | | | | |
| - | | | | Double | r |
| Multi-line: no | | | | | |

© Siemens AG 2004 All Rights Reserved

| **circleRadiusS** | | | | | |
|---|---|---|---|---|---|
| Corresponds to circleRadius for block search with calculation.<br>Note: This variable is not available for the variable service, but only for logging in connection with block search events! | | | | | |
| - | | | | Double | r |
| Multi-line: yes | 1 | | | | |

| **circleTurn** | | | | | |
|---|---|---|---|---|---|
| Progr. number of additional circular passes with<br>helical interpolation in curr. program | | | | | |
| - | 0 | 0 | | UDoubleword | r |
| Multi-line: yes | 1 | | 1 | | |

| **circleTurnS** | | | | | |
|---|---|---|---|---|---|
| Programmed number of additional circular passes with<br>helical interpolation in the current program for search with calculation.<br>Note: This variable is not available for the Variable Service, but only for<br>logging of block search events | | | | | |
| - | 0 | 0 | | UDoubleword | r |
| Multi-line: yes | 1 | | 1 | | |

| **cmdToolEdgeCenterCircleCenterEns** | | | | | |
|---|---|---|---|---|---|
| Arc center in relation to WOS frame, i.e. with tool length but<br>without tool radius | | | | | |
| - | 0 | | | Double | r |
| Multi-line: yes | No. of geo-axis | | 3 | | |

| **cmdToolEdgeCenterCircleCenterEnsS** | | | | | |
|---|---|---|---|---|---|
| Corresponds to circleCenterWos for block search with calculation<br>in relation to the WOS frame, i.e. with tool length but without tool radius<br>Note: This variable is not available for the variable service, but only for<br>logging in connection with block search events! | | | | | |
| - | 0 | | | Double | r |
| Multi-line: yes | No. of geo-axis | | 3 | | |

| **cmdToolEdgeCenterCircleRadiusEns** | | | | | |
|---|---|---|---|---|---|
| Arc radius in relation to WOS frame as center-point path, i.e. with tool<br>length but without tool radius | | | | | |
| - | 0 | | | Double | r |
| Multi-line: yes | 1 | | 1 | | |

| **cmdToolEdgeCenterCircleRadiusEnsS** | | | | | |
|---|---|---|---|---|---|
| Corresponds to circleRadiusWos for block search with calculation<br>in relation to WOS frame as center-point path. i.e. with tool length<br>but without tool radius<br>Note: This variable is not available for the variable service, but only for<br>logging in connection with block search events! | | | | | |
| - | 0 | | | Double | r |
| Multi-line: yes | 1 | | 1 | | |

© Siemens AG 2004 All Rights Reserved

| **lastBlockNoStr** | | | | | |
|---|---|---|---|---|---|
| Indicates the last programmed block number, if $MN_DISPLAY_FUNCTION_MASK bit 0 is set. A block number is shown until either a new block number is programmed or the subroutine level which generated the block number has been left. Block numbers of masked blocks are not displayed.<br>There is also no display if DISPLOF is active. | | | | | |
| - | | | | String[12] | r |
| Multi-line: yes | 1 | | 1 | | |

| **msg** | | | | | PG |
|---|---|---|---|---|---|
| Messages from a part program can be programmed with the instruction 'MSG (...)'. The variable 'msg' contains the text of the current 'MSG(...)'-instruction until a new instrucion is processed or until the message is deleted with the instruction 'MSG ()'. | | | | | |
| - | | | | String[128] | r |
| Multi-line: no | | | 1 | | |

| **progName** | | | | | |
|---|---|---|---|---|---|
| Progam name of the currently active program (or subroutine) | | | | | |
| - | | | | String[32] | r |
| Multi-line: no | | | 1 | | |

| **seekw** | | | | | |
|---|---|---|---|---|---|
| First line enabled for modification in part program | | | | | |
| - | 0 | 0 | | UWord | r |
| Multi-line: yes | 1 | | 1 | | |

| **singleBlock** | | | | | |
|---|---|---|---|---|---|
| In most cases the variable 'block' is used to read the currently active blocks of the part program. Because this variable is limited to 66 characters per string, it might be necessary (for long blocks) to read longer strings. The variable 'singleBlock' can read complete blocks (up to strings with 198 charecters) . 3 lines can be addressed:<br><br>Line index 1: last block<br>Line index 2: current block<br>Line index 3: next block<br><br>It is not guaranteed for rapid block changes, that the information of 3 successive blocks is always consistent, because each block is read with a single variable request. This method is only safe, if the part program has stopped. | | | | | |
| - | | | | String[198] | r |
| Multi-line: yes | Block index, 1 = last, 2 = current, 3 = next block | | 3 | | |

| **stepEditorFormName** | | | | | |
|---|---|---|---|---|---|
| Current module name for step editor is stored | | | | | |
| - | | | | String[128] | r |
| Multi-line: yes | 1 | | 1 | | |

| **workPandProgName** | | | | | |
|---|---|---|---|---|---|
| Workpiece name and name of current program. | | | | | |
| - | | | | String[160] | r |
| Multi-line: yes | 1 | | 1 | | |

| **workPName** | | | | | |
|---|---|---|---|---|---|
| Name of the active workpiece | | | | | |
| - | | | | String[32] | r |
| Multi-line: no | | | 1 | | |

© Siemens AG 2004 All Rights Reserved

| **workPNameLong** | | | | | |
|---|---|---|---|---|---|
| Workpiece name of active workpiece | | | | | |
| - | | | | String[128] | r |
| Multi-line: no | | | | | |

© Siemens AG 2004 All Rights Reserved

## 3.4.5 Area C, Mod. SPARPP: Program pointer in automatic operation

**OEM-MMC: Linkitem** /Channel/ProgramPointer/...

In automatic mode it is possible to branch to several subroutine levels from the main program level. The state of the program can be determined for every program level. Each variable of the module consists of 12 rows. This makes it possible to address the main program level and 11 subroutine levels (incl. ASUP levels).

The array indices (row indices) mean:

1 = Main program
2 = 1st subroutine level
3 = 2nd subroutine level
4 = 3rd subroutine level
5 = 4th subroutine level
6 = 5th subroutine level
7 = 6th subroutine level
8 = 7th subroutine level
9 = 1st asynchronous subroutine level
10 = 2nd asynchronous subroutine level
11 = 3rd asynchronous subroutine level
12 = 4th asynchronous subroutine level

| **actInvocCount** | | | | | |
|---|---|---|---|---|---|
| Subroutine call counter, actual value. Specifies the number of subroutine passes. Is always set 1 for the main program and for asynchronous subroutines. | | | | | |
| - | | | | UWord | r |
| Multi-line: yes | Index of program level | | 12 | | |

| **blockLabel** | | | | | |
|---|---|---|---|---|---|
| Block label | | | | | |
| - | | | | String[32] | r |
| Multi-line: yes | Index of program level | | 12 | | |

| **blockNoStr** | | | | | |
|---|---|---|---|---|---|
| Block number<br>[:][N]<No> | | | | | |
| - | | | | String[12] | r |
| Multi-line: yes | Index of program level | | 12 | | |

| **cmdInvocCount** | | | | | |
|---|---|---|---|---|---|
| Subroutine call counter, desired value. Specifies the number of subroutine passes. Is always set to 1 for the main program and for asynchronous subroutines. | | | | | |
| - | | | | UWord | r |
| Multi-line: yes | Index of program level | | 12 | | |

© Siemens AG 2004 All Rights Reserved

| displayState | | | | | |
|---|---|---|---|---|---|
| Display state for block display.<br>(Blocks should not be displayed automatically for program levels for which DISPLAY OFF has been programmed in the PROC instruction. This is valid also for the subroutine levels below).<br><br>0 = DISPLAY OFF for the program level<br>1 = DISPLAY ON for the program level | | | | | |
| - | 0 | | | UWord | r |
| Multi-line: yes | Index of the program level | | 12 | | |

| extProgBufferName | | | | | |
|---|---|---|---|---|---|
| Name of FIFO buffer for execution from external source | | | | | |
| - | | | | String[160] | wr |
| Multi-line: yes | Index of program level | | 12 | | |

| extProgFlag | | | | | |
|---|---|---|---|---|---|
| Indicates whether programs are being executed externally<br>0: Program is being processed from NCK program memory<br>1: Program is being executed externally | | | | | |
| - | | | | UWord | r |
| Multi-line: yes | Index of program level | | 12 | | |

| lastBlockNoStr | | | | | |
|---|---|---|---|---|---|
| Returns the last programmed block number for each program level when $MN_DISPLAY_FUNCTION_MASK bit 0 is set. A block number is shown until either a new block number is programmed or the subroutine level which generated the block number has been left. Block numbers of masked blocks are not displayed.<br>There is also no display if DISPLOF is active. | | | | | |
| - | | | | String[12] | r |
| Multi-line: yes | Index of program level | | 12 | | |

| progName | | | | | |
|---|---|---|---|---|---|
| Program name | | | | | |
| - | | | | String[32] | r |
| Multi-line: yes | Index of program level | | 12 | | |

| seekOffset | | | | | |
|---|---|---|---|---|---|
| Search pointer (block offset, each block consists of a string that ends with a line feed) | | | | | |
| - | | | | Long Integer | r |
| Multi-line: yes | Index of program level | | 12 | | |

| seekw | | | | | |
|---|---|---|---|---|---|
| First line enabled for modification in part program | | | | | |
| - | 0 | 0 | | UWord | r |
| Multi-line: yes | Index of program level | | 12 | | |

| workPandProgName | | | | | |
|---|---|---|---|---|---|
| Workpiece name and name of current program. | | | | | |
| - | | | | String[160] | r |
| Multi-line: yes | Index of program level | | 12 | | |

© Siemens AG 2004 All Rights Reserved

| **workPName** | | | | | |
|---|---|---|---|---|---|
| Workpiece name = path name in the NCK file structure | | | | | |
| - | | | | String[32] | r |
| Multi-line: yes | Program level index | | 12 | | |

| **workPNameLong** | | | | | |
|---|---|---|---|---|---|
| Workpiece name = path name in the NCK file structure<br>Note: This variable is ignored when lines are accessed! | | | | | |
| - | | | | String[128] | r |
| Multi-line: yes | Program level index | | 12 | | |

© Siemens AG 2004 All Rights Reserved

## 3.4.6 Area C, Mod. SPARPI: Program pointer on interruption

**OEM-MMC: Linkitem** /Channel/InterruptionSearch/...

In order to be able to continue at the point of interruption in a program, the current states of the main program and any subroutines must be stored. On a program interrupt the information is immediately updated in the NCK and reamins valid even after RESET.
This makes it possible to read the states of the main program level and the 11 subroutine levels (incl. ASUP levels).
The array indices (row indices) mean:

1 = main program
2 = 1st subroutine level
3 = 2nd subroutine level
4 = 3rd subroutine level
5 = 4th subroutine level
6 = 5th subroutine level
7 = 6th subroutine level
8 = 7th subroutine level
9 = 1st asynchronous subroutine level
10 = 2nd asynchronous subroutine level
11 = 3rd asynchronous subroutine level
12 = 4th asynchronus subroutine level

| **forward** | | | | | |
|---|---|---|---|---|---|
| Search direction<br>2 = forwards | | | | | |
| - | | | | UWord | r |
| Multi-line: yes | Index of program level | | 12 | | |

| **invocCount** | | | | | |
|---|---|---|---|---|---|
| Actual value of the subroutine call counter. Is always 1 for the main program | | | | | |
| - | | | | UWord | r |
| Multi-line: yes | Index of program level | | 12 | | |

| **plcStartReason** | | | | | |
|---|---|---|---|---|---|
| Specifies for the SERUPRO function which channel has to be started by the PLC so that the current channel starts. | | | | | |
| - | 0 | 0 | | UWord | r |
| Multi-line: yes | Program level index | | 12 | | |

| **progName** | | | | | |
|---|---|---|---|---|---|
| Program name | | | | | |
| - | | | | String[32] | r |
| Multi-line: yes | Index of program level | | 12 | | |

| **searchString** | | | | | |
|---|---|---|---|---|---|
| Search string (the first 64 characters of the NC block - corresponding to the search pointer) | | | | | |
| - | | | | String[64] | r |
| Multi-line: yes | Index of program level | | 12 | | |

© Siemens AG 2004 All Rights Reserved

| **searchType** | | | | | |
|---|---|---|---|---|---|
| Search type<br>5 = search pointer block-oriented (searching for line feed characters) | | | | | |
| - | | | | UWord | r |
| Multi-line: yes | Index of program level | | 12 | | |

| **seekOffset** | | | | | |
|---|---|---|---|---|---|
| Search pointer (block-oriented, searching for linefeed characters)<br>1fffffff HEX is returned if the value is invalid. | | | | | |
| - | | | | Long Integer | r |
| Multi-line: yes | Index of program level | | 12 | | |

| **status** | | | | | |
|---|---|---|---|---|---|
| Informs about whether block SPARPI includes currently<br>valid values, and provides the reason for the last update of the<br>block, if available.<br>Note: If an interruption occurs in a program range between the command<br>IPTRLOCK and IPTRUNLOCK, the first block after IPTRLOCK will be provided<br>in the SPARPI instead of the current block.<br>The first interruption between IPTRLOCK and IPTRUNLOCK will set "status"<br>and any additional interruption prior to IPTRUNLOCK will neither change "status" nor SPARPI.<br>0: Program is running, i.e. SPARPI variables are not up-to-date<br>1: Program selection, i.e. SPARPI has been reset<br>2: Block selection through PI service _N_SEL_BL<br>3: Reset (program abort)<br>4: Stop after program instruction, e.g. M0<br>5: Stop with STOP key<br>6: Stop caused by alarm | | | | | |
| - | 1 | 0 | 6 | UWord | r |
| Multi-line: yes | 1 | | 1 | | |

| **workPName** | | | | | |
|---|---|---|---|---|---|
| Workpiece name = path name in the NC file structure | | | | | |
| - | | | | String[32] | r |
| Multi-line: yes | Index of program level | | 12 | | |

| **workPNameLong** | | | | | |
|---|---|---|---|---|---|
| Workpiece name = path name in the NCK file structure<br>Note: This variable is ignored when lines are accessed! | | | | | |
| - | | | | String[128] | r |
| Multi-line: yes | Index of program level | | 12 | | |

© Siemens AG 2004 All Rights Reserved

## 3.4.7 Area C, Mod. SPARPF: Program pointers for block search and stop run

**OEM-MMC: Linkitem** /Channel/Search/...

To look for a particular block within a parts program the user can enter search criteria and start a block search. The variables to be entered are combined in the module SPARPF and must be written by the MMC (or another component on the MPI bus).
One main program level and 11 subroutine levels can be processed. These levels are the row indices of the individual variables. The search targets (seek pointer and search string) can only be used mutually exclusively in one level. If a collision occurs, a negative acknowledgement results when the block search is started.
Depending on the search type, the search string is either a block label, block number or any string.
If no path name is specified, the default search strategy for subroutine calls is used. The main program entered in the first program level must be selected for the block search; otherwise the search request is acknowledged negatively.

The array indices (row indices) mean:

1 = main program level for search run
2 = 1st subroutine level for search run
3 = 2nd subroutine level for search run
4 = 3rd subroutine level for search run
5 = 4th subroutine level for search run
6 = 5th subroutine level for search run
7 = 6th subroutine level for search run
8 = 7th subroutine level for search run
9 = 1st asynchronous subroutine level for search run
10 = 2nd asynchronous subroutine level for search run
11 = 3rd asynchronous subroutine level for search run
12 = 4th asynchronous subroutine level for search run

101 = main program level for stop run
102 = 1st subroutine level for stop run
103 = 2nd subroutine level for stop run
104 = 3rd subroutine level for stop run
105 = 4th subroutine level for stop run
106 = 5th subroutine level for stop run
107 = 6th subroutine level for stop run
108 = 7th subroutine level for stop run
109 = 1st asynchronous subroutine level for stop run
110 = 2nd asynchronous subroutine level for stop run
111 = 3rd asynchronous subroutine level for stop run
112 = 4th asynchronous subroutine level for stop run

© Siemens AG 2004 All Rights Reserved

| **forward** | | | | | |
|---|---|---|---|---|---|
| Search direction<br>Search direction "backwards" is only possible in the mode without calculation<br>1 = backwards (without calculation)<br>2 = forwards | | | | | |
| - | | | | UWord | wr |
| Multi-line: yes | Index of program level | | 12 | | |

| **invocCount** | | | | | |
|---|---|---|---|---|---|
| Actual value of the subroutine call counter. Is always 1 for the main program. | | | | | |
| - | | | | UWord | wr |
| Multi-line: yes | Index of program level | | 12 | | |

| **plcStartReason** | | | | | |
|---|---|---|---|---|---|
| Specifies for the SERUPRO function which channel has to be started by the PLC so that the current channel starts. | | | | | |
| - | 0 | 0 | | UWord | wr |
| Multi-line: yes | Program level index | | 112 | | |

| **progName** | | | | | |
|---|---|---|---|---|---|
| Program name. The main program that is used in the first main program level must be selected for the block search, otherwise the search request will be acknowledged negatively. | | | | | |
| - | | | | String[32] | wr |
| Multi-line: yes | Index of the program level | | 12 | | |

| **searchString** | | | | | |
|---|---|---|---|---|---|
| Search string (the first 64 characters of the NC block - corresponding to search pointer). Contents of the search string depends on the search type and are either:<br>block label<br>block number<br>any string | | | | | |
| - | | | | String[64] | wr |
| Multi-line: yes | Index of program level | | 12 | | |

| **searchType** | | | | | |
|---|---|---|---|---|---|
| Search type<br>1 = block number<br>2 = label<br>3 = string<br>4 = program level<br>5 = search pointer block-oriented (searching for line feeds) | | | | | |
| - | | | | UWord | wr |
| Multi-line: yes | Index of program level | | 12 | | |

| **seekOffset** | | | | | |
|---|---|---|---|---|---|
| Search pointer (block-oriented, searching for line feeds). If the search pointer is used, a program name (progName) always must have been defined. The search pointer refers to this program. | | | | | |
| - | | | | Long Integer | wr |
| Multi-line: yes | Index of program level | | 12 | | |

| **status** | | | | | |
|---|---|---|---|---|---|
| This variable is without function in block SPARPF.<br>It has only been introduced to achieve the same structure of SPARPI and SPARPF. | | | | | |
| - | 0 | 0 | 0 | UWord | wr |
| Multi-line: yes | 1 | | 1 | | |

© Siemens AG 2004 All Rights Reserved

| **workPName** | | | | | |
|---|---|---|---|---|---|
| Workpiece name = path name in the NC file structure. If no path name is specified, the default search strategy for subroutine calls is used. | | | | | |
| - | | | | String[32] | wr |
| Multi-line: yes | Index of program level | | 12 | | |

| **workPNameLong** | | | | | |
|---|---|---|---|---|---|
| Workpiece name = path name in the NCK file structure. If no path name is specified, the default search strategy for subroutine calls is used.<br>Note: This variable is ignored when lines are accessed! | | | | | |
| - | | | | String[128] | wr |
| Multi-line: yes | Index of program level | | 12 | | |

© Siemens AG 2004 All Rights Reserved

## 3.4.8 Area C, Mod. SSYNAC: Synchronous actions

**OEM-MMC: Linkitem** /Channel/SelectedFunctions/...

Several synchronous actions (M, H, S, E, F, T, D) can be active simultaneously in one channel. The module SSYNAC contains a list of all the synchronous actions programmed in the current block. This module consists of arrays of varying length because some types of synchronous actions might be programmed several times in a block. A synchronous action that is not assigned produces a negative number for the respecitive index.
For each synchronous action there is an address variable and a variable in which the value of the address is entered.
5 M functions
3 S functions
3 H functions
1 T function
1 D function
6 F functions
1 E function
can be programmed in each part program block, but no more than 10 synchronous actions must be programmed in a single block.

| **blockNoStrAct** | | | | | |
|---|---|---|---|---|---|
| Block number of the current block if synchronous actions are active | | | | | |
| - | | | | String[12] | r |
| Multi-line: yes | No of the synchronous action | | /C/SSYNAC/numSynAct | | |

| **blockNoStrProg** | | | | | |
|---|---|---|---|---|---|
| Number of the block where the synchronous action has been programmed | | | | | |
| - | | | | String[12] | r |
| Multi-line: yes | No. of the synchronous action | | /C/SSYNAC/numSynAct | | |

| **Dadr** | | | | | |
|---|---|---|---|---|---|
| D-number. There is only one active D-number per channel. | | | | | |
| - | | | | Long Integer | r |
| Multi-line: no | | | 1 | | |

| **Dval** | | | | | |
|---|---|---|---|---|---|
| Value of the current D-number | | | | | |
| - | | | | Long Integer | r |
| Multi-line: no | | | 1 | | |

| **Eadr** | | | | | S5 |
|---|---|---|---|---|---|
| Number of active E-function | | | | | |
| - | | | | UWord | r |
| Multi-line: no | | | 1 | | |

© Siemens AG 2004 All Rights Reserved

| **Eval** | | | | | S5 |
|---|---|---|---|---|---|
| Value of the E-function | | | | | |
| mm/min, inch/min, user defined | | | | Double | r |
| Multi-line: no | | | 1 | | |

| **Hadr** | | | | | S5 |
|---|---|---|---|---|---|
| Number of active auxiliary functions (H-functions). Up to three H-functions can be active simultaneously. | | | | | |
| - | | 0 | 99 | UWord | r |
| Multi-line: yes | Serial number | | 3 | | |

| **Hval** | | | | | S5 |
|---|---|---|---|---|---|
| Value of the H-function | | | | | |
| - | | -99999,9999 | 99999,9999 | Double | r |
| Multi-line: yes | Serial number | | 3 | | |

| **id** | | | | | |
|---|---|---|---|---|---|
| ID of the synchronous action; value 0 means no ID defined | | | | | |
| - | | | | UWord | r |
| Multi-line: yes | No. of the synchronous action | | /C/SSYNAC/numSynAct | | |

| **Madr** | | | | | S5 |
|---|---|---|---|---|---|
| Number of the active M-function. Up to 5 M-functions can be active simultaneously. | | | | | |
| - | | 0 | 99 | UWord | r |
| Multi-line: yes | Serial number | | 5 | | |

| **Mval** | | | | | S5 |
|---|---|---|---|---|---|
| Value of the M-function | | | | | |
| - | | 0 | 99999999 | Long Integer | r |
| Multi-line: yes | Serial number | | 5 | | |

| **numSynAct** | | | | | |
|---|---|---|---|---|---|
| Number of synchronous actions | | | | | |
| - | | | | UWord | r |
| Multi-line: yes | 1 | | 1 | | |

| **Sadr** | | | | | S5 |
|---|---|---|---|---|---|
| Number of active S-functions. Up to three S-functions can be active simultaneously. | | | | | |
| - | | 0 | 6 | UWord | r |
| Multi-line: yes | Serial number | | 3 | | |

| **Sval** | | | | | S5 |
|---|---|---|---|---|---|
| Value of the S-function. Specifies the spindle speed. | | | | | |
| rev/min , m/min | | 0 | 999999,999 | Double | r |
| Multi-line: yes | Serial number | | 3 | | |

| **Tadr** | | | | | |
|---|---|---|---|---|---|
| Active T-number. Only one T-number can be active at any a time. | | | | | |
| - | | | | UWord | r |
| Multi-line: no | | | 1 | | |

| **TPreSelAdr** | | | | | |
|---|---|---|---|---|---|
| Number of the preselected T-function | | | | | |
| - | | | | UWord | r |
| Multi-line: no | | | 1 | | |

© Siemens AG 2004 All Rights Reserved

| **TPreSelVal** | | | | | |
|---|---|---|---|---|---|
| Value of the preselected T-function | | | | | |
| - | | | | Long Integer | r |
| Multi-line: no | | | 1 | | |

| **Tval** | | | | | |
|---|---|---|---|---|---|
| T-function value | | | | | |
| - | | | | Long Integer | r |
| Multi-line: no | | | 1 | | |

| **typStatus** | | | | | |
|---|---|---|---|---|---|
| Type and state of the synchronous action<br>Bits0-7 describe the state:<br>Bit0: active<br>Bit1: lock<br>Bits8-15 describe the type:<br>Bit8: static<br>Bit9: modal<br>Bit10: blockwise | | | | | |
| - | | | | UWord | r |
| Multi-line: yes | Number of the synchronous action | | /C/SSYNAC/numSynAct | | |

© Siemens AG 2004 All Rights Reserved

## 3.4.9 Area C, Mod. SYNACT: Channel-specific synchronous actions

**OEM-MMC: Linkitem** /Channel/SelectedFunctions/...

This module contains information on the synchronous actions. The 1000 digit of the cell contains the user protection level (0-7) needed for displaying the corresponding synchronous action.

| **blockNoStrAct** | | | | | |
|---|---|---|---|---|---|
| If a technology cycle is active: block number of the current action | | | | | |
| - | | | | String[12] | r |
| Multi-line: yes | (Protection level) * 1000 + no. of the synchronous action | | 7 * 1000 + /C/SYNACT/numSynAct | | |

| **blockNoStrProg** | | | | | |
|---|---|---|---|---|---|
| Number of the block where the synchronous action has been programmed | | | | | |
| - | | | | String[12] | r |
| Multi-line: yes | (Protection level) * 1000 + no. of the synchronous action | | 7 * 1000 + /C/SYNACT/numSynAct | | |

| **id** | | | | | |
|---|---|---|---|---|---|
| ID of the synchronous action; value 0 means that there is no ID defined (blockwise) | | | | | |
| - | | | | UWord | r |
| Multi-line: yes | (protection level) * 1000 + no. of the synchronous action | | 7 * 1000 + /C/SYNACT/numSynAct | | |

| **numSynAct** | | | | | |
|---|---|---|---|---|---|
| Number of synchronous actions | | | | | |
| - | | | | UWord | r |
| Multi-line: yes | (protection level) * 1000 + 1 | | 7 * 1000 + 1 | | |

| **typStatus** | | | | | |
|---|---|---|---|---|---|
| Type and state of the synchronous action<br>Bits0-7 describe the state:<br>Bit0: active, i.e. condition fullfilled, action is being executed<br>Bit1: lock, i.e. action is locked by PLC or Synact<br>Bits8-15 describe the type:<br>Bit8: static<br>Bit9: modal<br>Bit10: blockwise (to be recognized by id=0) | | | | | |
| - | | | | UWord | r |
| Multi-line: yes | (Protection level) * 1000 + no. of the synchronous action | | 7 * 1000 + /C/SYNACT/numSynAct | | |

© Siemens AG 2004 All Rights Reserved

## 3.4.10 Area C, Mod. SNCF: Active G functions

**OEM-MMC: Linkitem** /Channel/SelectedFunctions/...

All G functions are organized in G groups. Only one function of each G group can be active at a time. The module SNCF consists of a single variable that is organized as an array. The row index corresponds to the G group number.

| **ncFkt** | | | | | |
|---|---|---|---|---|---|
| Active G-function of relevant group G <No>.<br>If there is no function active within the corresponding G-group, the variable returns an empty string "\0". | | | | | |
| - | | | | String[16] | r |
| Multi-line: yes | G group number | | numGCodeGroups | | |

| **ncFktAct** | | | | | |
|---|---|---|---|---|---|
| Active G function of relevant current group in current language mode.<br>Depending on whether function has been programmed in Siemens or ISO Dialect mode, this is identical to ncFkt or ncFktFanuc. | | | | | |
| - | | | | String[16] | r |
| Multi-line: yes | G group number or ISO Dialect G group number | | numGCodeGroups bzw. numGCodeGroupsFanuc | | |

| **ncFktBin** | | | | | |
|---|---|---|---|---|---|
| Active G-function of the correponding group | | | | | |
| - | | | | UWord | r |
| Multi-line: yes | G group number | | numGCodeGroups | | |

| **ncFktBinAct** | | | | | |
|---|---|---|---|---|---|
| Active G function of relevant current group in current language mode.<br>Depending on whether function has been programmed in Siemens or ISO Dialect mode, this is identical to ncFktBin or ncFktBinFanuc.<br>(The value is the index of the active G function within the group) | | | | | |
| - | | | | UWord | r |
| Multi-line: yes | G group number or ISO Dialect G group number | | numGCodeGroups bzw. numGCodeGroupsFanuc | | |

| **ncFktBinFanuc** | | | | | |
|---|---|---|---|---|---|
| Active G function of relevant ISO Dialect group<br>(the value is the index of the active G function within the group) | | | | | |
| - | | | | UWord | r |
| Multi-line: yes | ISO Dialect G group number | | numGCodeGroupsFanuc | | |

| **ncFktBinS** | | | | | |
|---|---|---|---|---|---|
| Active G-function of the correponding group for block search with calculation<br>(The value is the index of the active G-function within the group)<br>Attention: This variable is available for protocolling block search events only, but not for the Variable Service. | | | | | |
| - | | | | UWord | r |
| Multi-line: yes | G group number | | numGCodeGroups | | |

© Siemens AG 2004 All Rights Reserved

| **ncFktFanuc** | | | | | |
|---|---|---|---|---|---|
| Active G function of relevant ISO Dialect group | | | | | |
| - | | | | String[16] | r |
| Multi-line: yes | ISO Dialect G group number | | numGCodeGroupsFanuc | | |

| **ncFktS** | | | | | |
|---|---|---|---|---|---|
| Active G-function of the correponding group for block search with calculation<br>Attention: This variable is available for protocolling block search events only, but not for the Variable Service. | | | | | |
| - | | | | String[16] | r |
| Multi-line: yes | G group number | | numGCodeGroups | | |

© Siemens AG 2004 All Rights Reserved

## 3.4.11 Area C, Mod. NIB: State data: Nibbling

**OEM-MMC: Linkitem** /Channel/Nibbling/...

The module NIB contains technology-specific data for nibbling.

| **actPunchRate** | | | | | N4 |
|---|---|---|---|---|---|
| Strokes per minute | | | | | |
| - | | | | UWord | r |
| Multi-line: no | | | 1 | | |

| **automCutSegment** | | | | | N4 |
|---|---|---|---|---|---|
| Identifier that indicates which type of automatic block division is active. The division is specified by the commands 'SPP' and 'SPN' in the part program.<br>0 = no block division<br>1 = number of segments per block ('SNP')<br>2 = segments of fixed length ('SPP') | | | | | |
| - | | | | UWord | r |
| Multi-line: no | | | 1 | | |

| **numStrokes** | | | | | N4 |
|---|---|---|---|---|---|
| Number of strokes when the instruction 'SPN' divides the block into segments (variable 'automCutSegment' = 1). | | | | | |
| - | | | | UWord | r |
| Multi-line: no | | | 1 | | |

| **partDistance** | | | | | N4 |
|---|---|---|---|---|---|
| If the block has been divided in segments with the instruction 'SPP' (variable 'automCutSegment' = 2) the variable specifies the length of the path between the punches. | | | | | |
| mm, inch, user defined | | | | Double | r |
| Multi-line: no | | | 1 | | |

| **punchActive** | | | | | N4 |
|---|---|---|---|---|---|
| Identification of punching or nibbling active. The part program turns off/on punching and nibbling with 'SPOF', 'SON' and 'PON'. Rapid punching and nibbling are turned on/off with 'SONS' and 'PONS'.<br>The variable 'punchActive' specified the present state.<br><br>0 = inactive<br>1 = punching active<br>2 = nibbling active<br>3 = rapid punching active (PONS from SW 4.1)<br>4 = rapid nibbling active (SONS from SW 4.1) | | | | | |
| - | | | | UWord | r |
| Multi-line: no | | | 1 | | |

| **punchDelayActive** | | | | | N4 |
|---|---|---|---|---|---|
| Identifier that indicates whether punching with delay is active. The part program can turn on/off the delay with the instructions 'PDELAYON' and 'PDELAYOF'. The variable 'PunchDelayActive' indicates the present state.<br>0 = inactive<br>1 = active | | | | | |
| - | | | | UWord | r |
| Multi-line: no | | | 1 | | |

© Siemens AG 2004 All Rights Reserved

| **punchDelayTime** | SD 42400: PUNCH_DWELL_TIME | | | | N4 |
|---|---|---|---|---|---|
| Punching delay time | | | | | |
| ms | | | | Double | r |
| Multi-line: no | | | 1 | | |

| **strokeNr** | | | | | |
|---|---|---|---|---|---|
| Current stroke number | | | | | |
| - | | | | UWord | r |
| Multi-line: no | | | 1 | | |

© Siemens AG 2004 All Rights Reserved

## 3.4.12 Area C, Mod. FB: Channel-specific base frames

**OEM-MMC: Linkitem** /Channel/BaseFrame/...

This only applies if $MC_MM_NUM_BASE_FRAMES > 0.

The maximum frame index is: $MC_MM_NUM_BASE_FRAMES - 1

| **linShift** | $P_CHBFR[x,y,TR] x=FrameNo, y=Axis | | | | PA |
|---|---|---|---|---|---|
| Translation of settable zero offset (the physical unit is defined in basicLengthUnit in module Y in area N). | | | | | |
| mm, inch, user defined | | | | Double | wr |
| Multi-line: yes | (Frame index - 1 ) * (numGeoAxes + numAuxAxes) + axis number | | $MC_MM_NUM_BASE_FRAMES * (numGeoAxes + numAuxAxes) | | |

| **linShiftFine** | $P_CHBFR[x,y,SI] x=FrameNo, y=Axis | | | | |
|---|---|---|---|---|---|
| Fine offset with frames, expansion of basic frames and settable frames | | | | | |
| mm, inch, user defined | | | | Double | wr |
| Multi-line: yes | (Frame index - 1 ) * (numGeoAxes + numAuxAxes) + axis number | | $MC_MM_NUM_BASE_FRAMES * (numGeoAxes + numAuxAxes) | | |

| **mirrorImgActive** | $P_CHBFR[x,y,MI] x=FrameNo, y=Axis | | | | PA |
|---|---|---|---|---|---|
| Mirroring enabled in a settable zero offset<br>0: Mirroring not active<br>1: Mirroring active | | | | | |
| - | | | | UWord | wr |
| Multi-line: yes | (Frame index - 1 ) * (numGeoAxes + numAuxAxes) + axis number | | $MC_MM_NUM_BASE_FRAMES * (numGeoAxes + numAuxAxes) | | |

| **rotation** | $P_CHBFR[x,y,RT] x=FrameNo, y=Axis | | | | PA |
|---|---|---|---|---|---|
| Rotation of a settable zero offset | | | | | |
| Degree | | | | Double | wr |
| Multi-line: yes | (Frame index - 1 ) * (numGeoAxes + numAuxAxes) + axis number | | $MC_MM_NUM_BASE_FRAMES * (numGeoAxes + numAuxAxes) | | |

| **scaleFact** | $P_CHBFR[x,y,SC] x=FrameNo, y=Axis | | | | PA |
|---|---|---|---|---|---|
| Scaling factor of a settable zero offset | | | | | |
| - | | | | Double | wr |
| Multi-line: yes | (Frame index - 1 ) * (numGeoAxes + numAuxAxes) + axis number | | $MC_MM_NUM_BASE_FRAMES * (numGeoAxes + numAuxAxes) | | |

© Siemens AG 2004 All Rights Reserved

## 3.4.13 Area C, Mod. FS: Channel-specific system frames

**OEM-MMC: Linkitem** /Channel/SystemFrame/...

Those that there are, are set by the bits in
$MC_MM_SYSTEM_FRAME_MASK.
Consequently, there may be gaps between the active system frames.

The maximum frame index is:
3 up to but excluding SW 6.3.
5 from and including SW 6.3.

| **linShift** | $P_SETFR[Achse, TR] | | | | |
|---|---|---|---|---|---|
| Translation | | | | | |
| mm, inch, user defined | 0 | | | Double | wr |
| Multi-line: yes | Frameindex | | 4 * (numGeoAxes+numAuxAxes) | | |

| **linShiftFine** | $P_SETFR[Achse, SI] | | | | |
|---|---|---|---|---|---|
| Fine offset | | | | | |
| mm, inch, user defined | 0 | | | Double | wr |
| Multi-line: yes | Frameindex | | 4 * (numGeoAxes+numAuxAxes) | | |

| **mirrorImgActive** | $P_SETFR[Achse, MI] | | | | |
|---|---|---|---|---|---|
| Mirroring<br>0: Mirroring inactive<br>1: Mirroring active | | | | | |
| - | 0 | 0 | 1 | UWord | wr |
| Multi-line: yes | Frameindex | | 4 * (numGeoAxes+numAuxAxes) | | |

| **rotation** | $P_SETFR[Achse, RT] | | | | |
|---|---|---|---|---|---|
| Rotation | | | | | |
| Degree | 0 | | | Double | wr |
| Multi-line: yes | Frameindex | | 4 * (numGeoAxes+numAuxAxes) | | |

| **scaleFact** | $P_SETFR[Achse, SC] | | | | |
|---|---|---|---|---|---|
| Scaling factor | | | | | |
| - | 0 | | | Double | wr |
| Multi-line: yes | Frameindex | | 4 * (numGeoAxes+numAuxAxes) | | |

© Siemens AG 2004 All Rights Reserved

## 3.4.14 Area C, Mod. AUXFU: Auxiliary functions

**OEM-MMC: Linkitem** /Channel//...

The module includes the active auxiliary functions for each group.
In the line, the auxiliary function group (64 groups) and the
desired view are addressed:
Line 1001-1064: Active auxiliary function from the point of view of the NCK
Line 2001-2064: Collected auxiliary function (after search run) from the point of view of the NCK
Line 3001-3064: Active auxiliary function from the point of view of the PLC
Line 1-64: Summary of the above views

Only the values of lines 3001-3064 can be written.
When writing individual values, it must be taken care
that the status variable is written last.
The entire data block of an auxiliary function will not be
accepted before this variable is written.

| **extension** | | | | | |
|---|---|---|---|---|---|
| Extension of the auxiliary function | | | | | |
| - | 0 | 0 | | UWord | wr |
| Multi-line: yes | Group of auxiliary functions/view | | 3064 | | |

| **status** | | | | | |
|---|---|---|---|---|---|
| Status of the auxiliary function<br>Bit0 = 1: Auxiliary function has been collected (NCK view)<br>Bit1 = 1: Auxiliary function has been output to PLC (NCK view)<br>Bit2 = 1: Auxiliary function has been acknowledged by PLC (NCK view)<br>Bit3 = 1: Auxiliary function has been acknowledged by PLC (PLC view)<br>Bit4 = 1: Auxiliary function has been functionally completed (PLC view)<br><br>Bit14 = 1: Value type is LONG<br>Bit15 = 1: Value type is DOUBLE | | | | | |
| - | 0 | 0 | | UWord | wr |
| Multi-line: yes | Group of auxiliary functions/view | | 3064 | | |

| **type** | | | | | |
|---|---|---|---|---|---|
| Type of the auxiliary function, e.g. "M", "S", "T", "D", "F", "H", "L". | | | | | |
| - | | | | String[2] | wr |
| Multi-line: yes | Group of auxiliary functions/view | | 3064 | | |

| **valueDo** | | | | | |
|---|---|---|---|---|---|
| Value of the auxiliary function.<br>This value will be supplied, if "status" Bit15 = 1 | | | | | |
| - | 0 | 0 | | Double | wr |
| Multi-line: yes | Group of auxiliary functions/view | | 3064 | | |

| **valueLo** | | | | | |
|---|---|---|---|---|---|
| Value of the auxiliary function.<br>This value will be supplied, if "status" Bit14 = 1 | | | | | |
| - | 0 | 0 | | UDoubleword | wr |
| Multi-line: yes | Group of auxiliary functions/view | | 3064 | | |

© Siemens AG 2004 All Rights Reserved

# 3.5 State data of axes

## 3.5.1 Area C, Mod. SMA: State data: Machine axes

**OEM-MMC: Linkitem** /Channel/MachineAxis/...

All state data that are dependent on machine movement and are defined specifically for machine axes (geometry and special axes) are combined in module SMA. Supplementary information is to be found in module SEMA. The individual variables are defined as fields where the line index is the number of the machine axis (assigned to the current channel). The variable "name" in module SMA with the line index in question identifies the axis.
The assignment of the line indices in modules SMA and SEMA is identical.

| **actIncrVal** | DB31-48, DBB5 | | | | H1 |
|---|---|---|---|---|---|
| Active INC weighting of the axis<br>0 = INC_10000<br>1 = INC_1000<br>2 = INC_100<br>3 = INC_10<br>4 = INC_1<br>5 = INC_VAR<br>6 = INC_JOG_CONT<br>7 = no incremental mode set | | | | | |
| - | | | | UWord | r |
| Multi-line: yes | Axis index | | numMachAxes | | |

| **actToolBasePos** | $AA_IM[x] x = Ax is | | | | |
|---|---|---|---|---|---|
| Tool base position. Physical unit is defined in the variable extUnit (in this module). | | | | | |
| mm, inch, degree, user defined | | | | Double | r |
| Multi-line: yes | Axis index | | numMachAxes | | |

| **cmdToolBasePos** | | | | | |
|---|---|---|---|---|---|
| Tool base position. Physical unit is defined in variable extUnit (in this module). | | | | | |
| mm, inch, degree, user defined | | | | Double | r |
| Multi-line: yes | Axis index | | numMachAxes | | |

| **extUnit** | | | | | |
|---|---|---|---|---|---|
| Current physical unit of the axis position<br>0 = mm<br>1 = inch<br>2 = degree<br>3 = indexing position<br>4 = userdef | | | | | |
| - | | | | UWord | r |
| Multi-line: yes | Axis index | | numMachAxes | | |

| **name** | | | | | |
|---|---|---|---|---|---|
| Axis name | | | | | |
| - | | | | String[32] | r |
| Multi-line: yes | Axis index | | numMachAxes | | |

© Siemens AG 2004 All Rights Reserved

| **status** | | | | | |
|---|---|---|---|---|---|
| Axis state<br>0 = travel command in plus direction<br>1 = travel command in minus direction<br>2 = exact position coarse reached<br>3 = exact position fine reached | | | | | |
| - | | | | UWord | r |
| Multi-line: yes | Axis index | | numMachAxes | | |

| **toolBaseDistToGo** | | | | | |
|---|---|---|---|---|---|
| Tool base distance-to-go. Physical unit is defined in the variable extUnit (in this module). | | | | | |
| mm, inch, degree, user defined | | | | Double | r |
| Multi-line: yes | Axis index | | numMachAxes | | |

| **toolBaseREPOS** | | | | | |
|---|---|---|---|---|---|
| Tool base REPOS. Physical unit is defined in the variable extUnit (in this module). | | | | | |
| mm, inch, degree, user defined | | | | Double | r |
| Multi-line: yes | Axis index | | numMachAxes | | |

| **varIncrVal** | | | | | |
|---|---|---|---|---|---|
| Settable value for INC_VAR. The physical value depends on whether the axis is linear or rotary.<br>Linear axis: unit is 1 mm<br>Rotary axis: unit is 1/1000 degrees | | | | | |
| mm, inch, degree, user defined | | | | Double | r |
| Multi-line: yes | Axis index | | numMachAxes | | |

© Siemens AG 2004 All Rights Reserved

## 3.5.2 Area C, Mod. SEMA: State data: Machine axes (extension of SMA)

**OEM-MMC: Linkitem** /Channel/MachineAxis/...

All state data that are dependent on machine movement and are defined specifically for machine axes (geometry and special axes) are combined in module SMA. Supplementary information is to be found in module SEMA. The individual variables are defined as fields where the line index is the number of the machine axis (assigned to the current channel). The variable "name" in module SMA with the line index in question identifies the axis.
The assignment of the line indices in modules SMA and SEMA is identical.

| **aaActIndexAxPosNo** | $AA_ACT_INDEX_AX_POS_NO[<Achse>] | | | | |
|---|---|---|---|---|---|
| Current indexing position; the display depends on $MN_INDEX_AX_NO_MODE and the division (via table or equidistant) | | | | | |
| - | 0 | | | UDoubleword | r |
| Multi-line: yes | Axis index | | numMachAxes | | |

| **aaAlarmStat** | $AA_ALARM_STAT | | | | |
|---|---|---|---|---|---|
| Display indicating whether alarms are active for a PLC-controlled axis.<br>The relevant coded alarm reactions can be used as a source for the "Extended Stop and Retract" function.<br>The data is bit-coded, allowing, where necessary, individual states to be masked or evaluated separately (bits not listed supply a value of 0)<br>Bit2 = 1: NOREADY (active rapid deceleration + cancelation of servo enable)<br>Bit6 = 1: STOPBYALARM (rampm stop in all channel axes)<br>Bit9 = 1: SETVDI (VDI interface signal "Setting alarm")<br>Bit13 = 1: FOLLOWUPBYALARM (Follow-up) | | | | | |
| - | 0 | | | UWord | r |
| Multi-line: yes | Axis index | | numMachAxes | | |

| **aaBcsOffset** | $AA_BCS_OFFSET[Achse] | | | | |
|---|---|---|---|---|---|
| Sum of all axial offsets of an axis, such as DRF, online tool offset, $AA_OFF and ext. WO. | | | | | |
| - | 0 | | | Double | r |
| Multi-line: yes | Axis index | | numMachAxes | | |

| **aaCoupAct** | $AA_COUP_ACT[x] x = Spindle following | | | | |
|---|---|---|---|---|---|
| Current coupling state of the slave spindle | | | | | |
| - | | | | UWord | r |
| Multi-line: yes | Axis index | | numMachAxes | | |

| **aaCoupOffs** | $AA_COUP_OFFS[x] x = Spindle | | | | |
|---|---|---|---|---|---|
| Position offset of the synchronous spindle desired value | | | | | |
| - | | | | Double | r |
| Multi-line: yes | Axis index | | numMachAxes | | |

| **aaCurr** | $AA_CURR[x] x = Axis | | | | |
|---|---|---|---|---|---|
| Actual value of the axis/spindle current in A (611D only) | | | | | |
| A | | | | Double | r |
| Multi-line: yes | Axis index | | numMachAxes | | |

© Siemens AG 2004 All Rights Reserved

| **aaDtbb** | $AA_DTBB[x] x = Axis | | | | |
|---|---|---|---|---|---|
| Axis-specific distance from the beginning of the block in the BCS for positioning and synchronous axes used in synchronous actions (note: SYNACT only) | | | | | |
| - | | | | Double | r |
| Multi-line: yes | Axis index | | numMachAxes | | |

| **aaDteb** | $AA_DTEB[x] x = Axis | | | | |
|---|---|---|---|---|---|
| Axis-specific distance to the end of the block in the BCS for positioning and synchronous axes used in synchronous actions (note: SYNACT only) | | | | | |
| - | | | | Double | r |
| Multi-line: yes | Axis index | | numMachAxes | | |

| **aaDtepb** | $AA_DTEPB[x] x = Axis | | | | |
|---|---|---|---|---|---|
| Axis-specific distance-to-go of infeed during oscillation in the BCS (note: SYNACT only) | | | | | |
| - | | | | Double | r |
| Multi-line: yes | Axis index | | numMachAxes | | |

| **aaEsrEnable** | $AA_ESR_ENABLE[Achse] | | | | |
|---|---|---|---|---|---|
| (Axial) enabling of reactions of "Extended Stop and Retract" function.<br>The selected axial ESR reaction must be parameterized in MD $MA_ESR_REACTION.<br>beforehand. The corresponding Stop or Retract reactions can be activated via<br>$AN_ESR_TRIGGER (or for individual drives in the event of communications failure/<br>DC-link undervoltage), generator-mode operation is automatically activated in response to<br>undervoltage conditions.<br>0: FALSE<br>1: TRUE | | | | | |
| - | 0 | 0 | 1 | UWord | r |
| Multi-line: yes | Axis index | | numMachAxes | | |

| **aaEsrStat** | $AA_ESR_STAT[Achse] | | | | |
|---|---|---|---|---|---|
| (Axial) status checkback signals of "Extended Stop and Retract" function,<br>which can be applied as input signals for the gating logic of the ESR (synchronous actions).<br><br>The data is bit-coded. Individual states can therefore be masked or<br>evaluated separately if necessary:<br>Bit0 = 1: Generator mode is activated<br>Bit1 = 1: Retract operation is activated<br>Bit2 = 1: Stop operation is activated<br>Bit3 = 1: Risk of undervoltage (DC-link voltage monitoring,<br>voltage has dropped below warning threshold)<br>Bit4 = 1: Speed has dropped below minimum generator mode threshold (i.e. no more<br>regenerative rotation energy is available). | | | | | |
| - | 0 | | | UWord | r |
| Multi-line: yes | Axis index | | numMachAxes | | |

| **aaEsrTrigger** | $AA_ESR_TRIGGER | | | | |
|---|---|---|---|---|---|
| Activation of "NC-controlled ESR" for PLC-controlled axis | | | | | |
| - | 0 | 0 | 1 | UWord | r |
| Multi-line: yes | Axis index | | numMachAxes | | |

| **aaIbnCorr** | $AA_IBN_CORR[<Achse>] | | | | |
|---|---|---|---|---|---|
| Current BZS setpoint value of an axis including override components | | | | | |
| - | 0 | | | Double | r |
| Multi-line: yes | Axis index | | numMachAxes | | |

© Siemens AG 2004 All Rights Reserved

| **aalenCorr** | $AA_IEN_CORR[<Achse>] | | | | |
|---|---|---|---|---|---|
| Current SZS setpoint value of an axis including override components | | | | | |
| - | 0 | | | Double | r |
| Multi-line: yes | Axis index | | numMachAxes | | |

| **aaJerkCount** | $AA_JERK_COUNT[Achse] | | | | |
|---|---|---|---|---|---|
| Total traverse processes of an axis with jerk | | | | | |
| - | | 0 | | Double | r |
| Multi-line: yes | Axis index | | numMachAxes | | |

| **aaJerkTime** | $AA_JERK_TIME[Achse] | | | | |
|---|---|---|---|---|---|
| Total traverse time of an axis with jerk | | | | | |
| - | | 0 | | Double | r |
| Multi-line: yes | Axis index | | numMachAxes | | |

| **aaJerkTotal** | $AA_JERK_TOT[Achse] | | | | |
|---|---|---|---|---|---|
| Overall total jerk of an axis | | | | | |
| - | | 0 | | Double | r |
| Multi-line: yes | Axis index | | numMachAxes | | |

| **aaLeadP** | $AA_LEAD_P[x] x = Axis | | | | |
|---|---|---|---|---|---|
| Actual lead value position | | | | | |
| - | | | | Double | r |
| Multi-line: yes | Axis index | | numMachAxes | | |

| **aaLeadPTurn** | $AA_LEAD_P_TURN | | | | |
|---|---|---|---|---|---|
| Current master value - position component lost<br>as a result of modulo reduction | | | | | |
| - | 0 | 0 | | UWord | r |
| Multi-line: yes | Axis index | | numMachAxes | | |

| **aaLeadSp** | $AA_LEAD_SP[x] x = Axis | | | | |
|---|---|---|---|---|---|
| Simulated lead value - position | | | | | |
| - | | | | Double | r |
| Multi-line: yes | Axis index | | numMachAxes | | |

| **aaLeadSv** | $AA_LEAD_SV[x] x = Axis | | | | |
|---|---|---|---|---|---|
| Simulated leading value velocity | | | | | |
| - | | | | Double | r |
| Multi-line: yes | Axis index | | numMachAxes | | |

| **aaLeadTyp** | $AA_LEAD_TYP[x] x = Axis | | | | |
|---|---|---|---|---|---|
| Source of the lead value<br><br><br><br>1: actual value<br>2: desired value<br>3: simulated value | | | | | |
| - | | | | UWord | r |
| Multi-line: yes | Axis index | | numMachAxes | | |

| **aaLeadV** | $AA_LEAD_V[x] x = Axis | | | | |
|---|---|---|---|---|---|
| Actual lead value - velocity | | | | | |
| - | | | | Double | r |
| Multi-line: yes | Axis index | | numMachAxes | | |

© Siemens AG 2004 All Rights Reserved

| **aaLoad** | $AA_LOAD[x] x = Axis | | | | |
|---|---|---|---|---|---|
| Drive load in % (611D only) | | | | | |
| % | | | | Double | r |
| Multi-line: yes | Axis index | | numMachAxes | | |

| **aaMaslState** | $AA_MASL_STAT | | | | |
|---|---|---|---|---|---|
| Each slave axis currently coupled via master-slave delivers the machine axis number of the corresponding master axis.<br>Zero is displayed as default for inactive coupling.<br>A master axis also shows default value zero.<br>0: No coupling for this axis configured, or axis is master axis, or no coupling active<br>>0: Machine axis number of the master axis with which the slave axis is currently coupled | | | | | |
| - | 0 | 0 | numMachAxes | UWord | r |
| Multi-line: yes | Axis index | | numMachAxes | | |

| **aaMm** | $AA_MM[x] x = Axis | | | | |
|---|---|---|---|---|---|
| Latched probe position in the machine coordinate system | | | | | |
| - | | | | Double | wr |
| Multi-line: yes | Axis index | | numMachAxes | | |

| **aaMm1** | $AA_MM1[x] x = Axis | | | | |
|---|---|---|---|---|---|
| Access to measurement result of trigger event 1 in the MCS | | | | | |
| - | | | | Double | wr |
| Multi-line: yes | Axis index | | numMachAxes | | |

| **aaMm2** | $AA_MM2[x] x = Axis | | | | |
|---|---|---|---|---|---|
| Access to measurement result of trigger event 2 in the MCS | | | | | |
| - | | | | Double | wr |
| Multi-line: yes | Axis index | | numMachAxes | | |

| **aaMm3** | $AA_MM3[x] x = Axis | | | | |
|---|---|---|---|---|---|
| Access to measurement result of trigger event 3 in the MCS | | | | | |
| - | | | | Double | wr |
| Multi-line: yes | Axis index | | numMachAxes | | |

| **aaMm4** | $AA_MM4[x] x = Axis | | | | |
|---|---|---|---|---|---|
| Access to measurement result of trigger event 4 in the MCS | | | | | |
| - | | | | Double | wr |
| Multi-line: yes | Axis index | | numMachAxes | | |

| **aaOff** | $AA_OFF[x] x = Axis | | | | |
|---|---|---|---|---|---|
| Superimposed position offset from synchronous actions | | | | | |
| - | | | | Double | r |
| Multi-line: yes | Axis index | | numMachAxes | | |

| **aaOffLimit** | $AA_OFF_LIMIT[x] x = Axis | | | | |
|---|---|---|---|---|---|
| Limit for axial correction $AA_OFF reached (Note: for SYNACT only)<br><br>0: limit not reached<br>1: limit in positive axial direction reached<br>11: limit in negative axial direction reached | | | | | |
| - | | | | UWord | r |
| Multi-line: yes | Axis index | | numMachAxes | | |

© Siemens AG 2004 All Rights Reserved

| **aaOffVal** | $AA_OFF_VAL[x] | | | | |
|---|---|---|---|---|---|
| Integrated value of overlaid motion for an axis.<br>The negative value of this variable can be used to cancel an overlaid motion.<br>e.g. $AA_OFF[axis] = -$AA_OFF_VAL[axis] | | | | | |
| - | 0 | | | Double | r |
| Multi-line: yes | Axis index | | numMachAxes | | |

| **aaOscillBreakPos1** | $AA_OSCILL_BREAK_POS1[<Achse>] | | | | |
|---|---|---|---|---|---|
| Oscillation interrupt position 1 | | | | | |
| - | | | | Double | r |
| Multi-line: yes | Axis index | | numMachAxes | | |

| **aaOscillBreakPos2** | $AA_OSCILL_BREAK_POS2[<Achse>] | | | | |
|---|---|---|---|---|---|
| Oscillation interrupt position 2 | | | | | |
| - | | | | Double | r |
| Multi-line: yes | Axis index | | numMachAxes | | |

| **aaOscillReversePos1** | $AA_OSCILL_REVERSE_POS1[x] x = Axis | | | | |
|---|---|---|---|---|---|
| Current reverse position 1 for oscillation in the BCS. For synchronous actions the value of the setting data $SA_OSCILL_REVERSE_POS1 is evaluated online; (note: SYNACT only) | | | | | |
| - | | | | Double | r |
| Multi-line: yes | Axis index | | numMachAxes | | |

| **aaOscillReversePos2** | $AA_OSCILL_REVERSE_POS2[x] x = Axis | | | | |
|---|---|---|---|---|---|
| Current reverse position 2 for oscillation in the BCS; For synchronous actions the value of the setting data $SA_OSCILL_REVERSE_POS1 is evaluated online; (note: SYNACT only) | | | | | |
| - | | | | Double | r |
| Multi-line: yes | Axis index | | numMachAxes | | |

| **aaOvr** | $AA_OVR[x] x = Axis | | | | |
|---|---|---|---|---|---|
| Axial override for synchronous actions | | | | | |
| - | | | | Double | r |
| Multi-line: yes | Axis index | | numMachAxes | | |

| **aaPlcOvr** | $AA_PLC_OVR[Achse] | | | | |
|---|---|---|---|---|---|
| Axial override specified by PLC for motion-synchronous actions | | | | | |
| - | 100 | 0 | | Double | r |
| Multi-line: yes | Axis index | | numMachAxes | | |

| **aaPolfa** | $AA_POLFA | | | | |
|---|---|---|---|---|---|
| The programmed retraction position of the single axis | | | | | |
| - | | | | Double | r |
| Multi-line: yes | Axis index | | numMachAxes | | |

| **aaPolfaValid** | $AA_POLFA_VALID | | | | |
|---|---|---|---|---|---|
| States whether the retraction of the single axis is programmed<br>0: No retraction programmed for the single axis<br>1: Retraction programmed as position<br>2: Retraction programmed as distance | | | | | |
| - | 0 | 0 | 2 | UWord | r |
| Multi-line: yes | Axis index | | numMachAxes | | |

| **aaPower** | $AA_POWER[x] x = Axis | | | | |
|---|---|---|---|---|---|
| Drive power in W (611D only) | | | | | |
| W | | | | Double | r |
| Multi-line: yes | Axis index | | numMachAxes | | |

© Siemens AG 2004 All Rights Reserved

| **aaSnglAxStat** | $AA_SNGLAX_STAT | | | | |
|---|---|---|---|---|---|
| Display status of a PLC-controlled axis<br>0: Not a single axis<br>1: Reset<br>2: Ended<br>3: Interrupted<br>4: Active<br>5: Alarm | | | | | |
| - | 0 | | | UWord | r |
| Multi-line: yes | Axis index | | numMachAxes | | |

| **aaSoftendn** | $AA_SOFTENDN[x] x = Axis | | | | |
|---|---|---|---|---|---|
| Software end position, negative direction | | | | | |
| - | | | | Double | r |
| Multi-line: yes | Axis index | | numMachAxes | | |

| **aaSoftendp** | $AA_SOFTENDP[x] x = Axis | | | | |
|---|---|---|---|---|---|
| Software end position, positive direction | | | | | |
| - | | | | Double | r |
| Multi-line: yes | Axis index | | numMachAxes | | |

| **aaStat** | $AA_STAT[] | | | | |
|---|---|---|---|---|---|
| Axis state<br>0: no axis state available<br>1: travel command is active<br>2: axis has reached the IPO end. only for channel axes<br>3: axis in position (exact stop coarse) for all axes<br>4: axis in position (exact stop fine) for all axes | | | | | |
| - | | | | UWord | r |
| Multi-line: yes | Axis index | | numMachAxes | | |

| **aaSync** | $AA_SYNC[x] x = Axis | | | | |
|---|---|---|---|---|---|
| Coupling state of the following axis with lead value coupling<br><br><br><br>0: not synchronized<br>1: synchronized coarse<br>2: synchronized fine<br>3: synchronized coarse and fine | | | | | |
| - | | | | UWord | r |
| Multi-line: yes | Axis index | | numMachAxes | | |

| **aaTorque** | $AA_TORQUE[x] x = Axis | | | | |
|---|---|---|---|---|---|
| Desired torque value in Nm (611D only) | | | | | |
| Nm | | | | Double | r |
| Multi-line: yes | Axis index | | numMachAxes | | |

| **aaTotalOvr** | $AA_TOTAL_OVR[Achse] | | | | |
|---|---|---|---|---|---|
| The total axial override for motion-synchronous actions | | | | | |
| - | 100 | 0 | | Double | r |
| Multi-line: yes | Axis index | | numMachAxes | | |

| **aaTravelCount** | $AA_TRAVEL_COUNT[Achse] | | | | |
|---|---|---|---|---|---|
| Total traverse processes of an axis | | | | | |
| - | | 0 | | Double | r |
| Multi-line: yes | Axis index | | numMachAxes | | |

© Siemens AG 2004 All Rights Reserved

| **aaTravelCountHS** | $AA_TRAVEL_COUNT_HS[Achse] | | | | |
|---|---|---|---|---|---|
| Total traverse processes of an axis at high speed | | | | | |
| - | | 0 | | Double | r |
| Multi-line: yes | Axis index | | numMachAxes | | |

| **aaTravelDist** | $AA_TRAVEL_DIST[Achse] | | | | |
|---|---|---|---|---|---|
| Total travel path of an axis in mm or degrees | | | | | |
| - | | 0 | | Double | r |
| Multi-line: yes | Axis index | | numMachAxes | | |

| **aaTravelDistHS** | $AA_TRAVEL_DIST_HS[Achse] | | | | |
|---|---|---|---|---|---|
| Total travel path of an axis at high speed in mm or degrees | | | | | |
| - | | 0 | | Double | r |
| Multi-line: yes | Axis index | | numMachAxes | | |

| **aaTravelTime** | $AA_TRAVEL_TIME[Achse] | | | | |
|---|---|---|---|---|---|
| Total traverse time of an axis in seconds | | | | | |
| - | | 0 | | Double | r |
| Multi-line: yes | Axis index | | numMachAxes | | |

| **aaTravelTimeHS** | $AA_TRAVEL_TIME_HS[Achse] | | | | |
|---|---|---|---|---|---|
| Total traverse time of an axis at high speed in seconds | | | | | |
| - | | 0 | | Double | r |
| Multi-line: yes | Axis index | | numMachAxes | | |

| **aaTyp** | $AA_TYP[x] x = Axis | | | | |
|---|---|---|---|---|---|
| Axis type<br>0: axis in other channel<br>1: channel axis of same channel<br>2: neutral axis<br>3: PLC axis<br>4: reciprocating axis<br>5: neutral axis, currently traversing in JOG<br>6: slave axis coupled via master value<br>7: coupled motion slave axis<br>8: command axis<br>9: compile cycle axis | | | | | |
| - | | | | UWord | r |
| Multi-line: yes | Axis index | | numMachAxes | | |

| **aaVactB** | $AA_VACTB[X] | | | | |
|---|---|---|---|---|---|
| Axis velocity in basic coordinate system | | | | | |
| mm/min, inch/min, user defined | 0.0 | | | Double | r |
| Multi-line: yes | Axis index | | numMachAxes | | |

| **aaVactM** | $AA_VACTM[X] | | | | |
|---|---|---|---|---|---|
| Axis velocity in machine coordinate system | | | | | |
| mm/min, inch/min, user defined | 0.0 | | | Double | r |
| Multi-line: yes | Axis index | | numMachAxes | | |

| **aaVc** | $AA_VC[x] x = Axis | | | | |
|---|---|---|---|---|---|
| Additive correction value for path feed or axial feed | | | | | |
| - | | | | Double | r |
| Multi-line: yes | Axis index | | numMachAxes | | |

© Siemens AG 2004 All Rights Reserved

| **ackSafeMeasPos** | | | | | |
|---|---|---|---|---|---|
| Confirmation of SI actual position<br>0 = not confirmed<br>0x00AC = confirmed | | | | | |
| - | | | | UWord | wr |
| Multi-line: yes | Axis index | | numMachAxes | | |

| **actCouppPosOffset** | $VA_COUP_OFFS[x] x = Axis | | | | S3 |
|---|---|---|---|---|---|
| Position offset of an axis to a leading axis / leading spindle (actual value) | | | | | |
| mm, inch, degree, user defined | | 0 | 360 | Double | r |
| Multi-line: yes | Axis index | | numMachAxes | | |

| **actFeedRate** | | | | | S5 |
|---|---|---|---|---|---|
| Actual value of axis-specific feedrate for positioning axes. Actual value of single axis feed for additional axes. | | | | | |
| - | | | | Double | r |
| Multi-line: yes | Axis index | | numMachAxes | | |

| **actIndexAxPosNo** | | | | | |
|---|---|---|---|---|---|
| Current indexing position number<br>0 = no indexing position<br>>0 = indexing position number | | | | | |
| - | | | | UWord | r |
| Multi-line: yes | Axis index | | numMachAxes | | |

| **actSpeedRel** | | | | | |
|---|---|---|---|---|---|
| Actual value of rotary speed (referring to the maximum speed in %; for 611D in MD1401), for linear drives actual value of the velocity. | | | | | |
| % | | | | Double | r |
| Multi-line: yes | Axis index | | numMachAxes | | |

| **actValResol** | | | | | |
|---|---|---|---|---|---|
| Actual value resolution. The physical unit is defined in measUnit (in this module) | | | | | |
| mm, inch, degree, user defined | | | | Double | r |
| Multi-line: yes | Axis index | | numMachAxes | | |

| **amSetupState** | | | | | |
|---|---|---|---|---|---|
| State variable of the PI Service Automatic set-up of an asynchronous motor<br>0 = inactive<br>1 = wait for PLC enable<br>2 = wait for key NC-start<br>3 = active<br>4 = stopped by Servo + fine code in the upper byte<br>5 = stopped by 611D + fine code in the upper byte<br>6 = stopped by NCK + fine code in the upper byte | | | | | |
| - | 0 | 0 | 0xff06 | UWord | r |
| Multi-line: yes | Axis index | | numMachAxes | | |

| **axComp** | | | | | |
|---|---|---|---|---|---|
| Sum of axis-specific compensation values (CEC Cross Error compensation and temperature compensation). The physical unit is defined in measUnit (in this module). | | | | | |
| mm, inch, degree, user defined | | | | Double | r |
| Multi-line: yes | Axis index | | numMachAxes | | |

© Siemens AG 2004 All Rights Reserved

| **axisActiveInChan** | | | | | |
|---|---|---|---|---|---|
| Flag indicating whether axis is active in this channel<br>0 = not active<br>1 = active | | | | | |
| - | | | | UWord | r |
| Multi-line: yes | Axis index | | numMachAxes | | |

| **axisFeedRateUnit** | | | | | |
|---|---|---|---|---|---|
| Unit of the axis-specific feedrate<br>0 = mm/min<br>1 = inch/min<br>2 = degree/min | | | | | |
| - | | | | UWord | r |
| Multi-line: yes | Axis index | | numMachAxes | | |

| **chanAxisNoGap** | | | | | |
|---|---|---|---|---|---|
| Display of existing axis, i.e. no axis gap in channel.<br>0: Axis does not exist<br>1: Axis does exist | | | | | |
| - | 0 | 0 | 1 | UWord | r |
| Multi-line: yes | Axis index | | numMachAxes | | |

| **chanNoAxisIsActive** | | | | | |
|---|---|---|---|---|---|
| Channel number in which the channel axis is currently active<br>0 = axis is not assigned to any channel<br>1 to maxnumChannels (Area.:N / Module:Y) = channel number | | | | | |
| - | | | | UWord | r |
| Multi-line: yes | Axis index | | numMachAxes | | |

| **cmdContrPos** | | | | | |
|---|---|---|---|---|---|
| Desired value of position after fine interpolation | | | | | |
| mm, inch, degree, user defined | | | | Double | r |
| Multi-line: yes | Axis index | | numMachAxes | | |

| **cmdCouppPosOffset** | $AA_COUP_OFFS[x] x = Axis | | | | S3 |
|---|---|---|---|---|---|
| Position offset of an axis referring to the leading axis / leading spindle (desired value) | | | | | |
| mm, inch, degree, user defined | | 0 | 360 | Double | r |
| Multi-line: yes | Axis index | | numMachAxes | | |

| **cmdFeedRate** | | | | | |
|---|---|---|---|---|---|
| Desired value of axis-specific feedrate, if axis is a positioning axis. Single axis feedrate if the axis is an additional axis. | | | | | |
| - | | | | Double | r |
| Multi-line: yes | Axis index | | numMachAxes | | |

| **cmdSpeedRel** | | | | | |
|---|---|---|---|---|---|
| Desired value of rotary speed. (referring to the max. speed in %; for 611D in MD 1401). For linear motors actual value of velocity. | | | | | |
| % | | | | Double | r |
| Multi-line: yes | Axis index | | numMachAxes | | |

| **contrConfirmActive** | | | | | |
|---|---|---|---|---|---|
| Controller enable<br>0 = no controller enable<br>1 = controller enable | | | | | |
| - | | | | UWord | r |
| Multi-line: yes | Axis index | | numMachAxes | | |

© Siemens AG 2004 All Rights Reserved

| **contrMode** | | | | | |
|---|---|---|---|---|---|
| Identifier for controller mode servo<br>0 = position control<br>1 = speed control<br>2 = stop<br>3 = park<br>4 = follow-up | | | | | |
| - | | | | UWord | r |
| Multi-line: yes | Axis index | | numMachAxes | | |

| **displayAxis** | $MC_DISPLAY_AXIS Bit16-31 | | | | |
|---|---|---|---|---|---|
| Identifier indicating whether axis is displayed by MMC as a machine axis.<br>0 = Do not display at all<br>0xFFFF = Always display everything<br>bit 0 = Display in actual-value window<br>bit 1 = Display in reference point window<br>bit 2 = Display in Preset / Basic offset / Scratching<br>bit 3 = Display in handwheel selection | | | | | |
| - | 0xFFFF | 0 | 0xFFFF | UWord | r |
| Multi-line: yes | Axis index | | numMachAxes | | |

| **distPerDriveRevol** | | | | | |
|---|---|---|---|---|---|
| Distance per revolution. The physical unit is defined in measUnit (in this module). | | | | | |
| mm, inch, degree, user defined | | | | Double | r |
| Multi-line: yes | Axis index | | numMachAxes | | |

| **drive2ndTorqueLimit** | | | | | |
|---|---|---|---|---|---|
| 2nd torque limit. With linear motors: 2nd force limit<br>0 = not active<br>1 = active | | | | | |
| - | | | | UWord | r |
| Multi-line: yes | Axis index | | numMachAxes | | |

| **driveActMotorSwitch** | | | | | |
|---|---|---|---|---|---|
| Actual motor wiring (star/delta)<br>0 = star<br>1 = delta | | | | | |
| - | | | | UWord | r |
| Multi-line: yes | Axis index | | numMachAxes | | |

| **driveActParamSet** | | | | | |
|---|---|---|---|---|---|
| Number of the actual drive parameter set | | | | | |
| - | | 1 | 8 | UWord | r |
| Multi-line: yes | Axis index | | numMachAxes | | |

| **driveClass1Alarm** | | | | | |
|---|---|---|---|---|---|
| Message ZK1 drive alarm<br>0 = no alarm set<br>1= alarm set (fatal error occured) | | | | | |
| - | | | | UWord | r |
| Multi-line: yes | Axis index | | numMachAxes | | |

| **driveContrMode** | | | | | |
|---|---|---|---|---|---|
| Control mode of drive<br>0 = current control<br>1 = speed control | | | | | |
| - | | | | UWord | r |
| Multi-line: yes | Axis index | | numMachAxes | | |

© Siemens AG 2004 All Rights Reserved

| **driveCoolerTempWarn** | | | | | |
|---|---|---|---|---|---|
| Heatsink temperature monitoring<br>0 = temperature OK<br>1 = overtemperature | | | | | |
| - | | | | UWord | r |
| Multi-line: yes | Axis index | | numMachAxes | | |

| **driveDesMotorSwitch** | | | | | |
|---|---|---|---|---|---|
| Motor wiring selection (star/delta)<br>0 = star<br>1 = delta | | | | | |
| - | | | | UWord | r |
| Multi-line: yes | Axis index | | numMachAxes | | |

| **driveDesParamSet** | | | | | |
|---|---|---|---|---|---|
| Desired parameter set of the drive | | | | | |
| - | | 1 | 8 | UWord | r |
| Multi-line: yes | Axis index | | numMachAxes | | |

| **driveFastStop** | | | | | |
|---|---|---|---|---|---|
| Ramp-function generator rapid stop<br>0 = not stopped<br>1 = stopped | | | | | |
| - | | | | UWord | r |
| Multi-line: yes | Axis index | | numMachAxes | | |

| **driveFreqMode** | | | | | |
|---|---|---|---|---|---|
| I/F mode | | | | | |
| - | | | | UWord | r |
| Multi-line: yes | Axis index | | numMachAxes | | |

| **driveImpulseEnabled** | | | | | |
|---|---|---|---|---|---|
| Enable inverter impulse (checkback signal to impulseEnable)<br>0 = not enabled<br>1 = enabled | | | | | |
| - | | | | UWord | r |
| Multi-line: yes | Axis index | | numMachAxes | | |

| **driveIndex** | | | | | |
|---|---|---|---|---|---|
| Drive assignment (logical drive number)<br>0 = drive does not exist<br>1 to 15 = logical drive number | | | | | |
| - | | 0 | 15 | UWord | r |
| Multi-line: yes | Axis index | | numMachAxes | | |

| **driveIntegDisable** | | | | | |
|---|---|---|---|---|---|
| Integrator disable<br>0 = not disabled<br>1 = disabled | | | | | |
| - | | | | UWord | r |
| Multi-line: yes | Axis index | | numMachAxes | | |

| **driveLinkVoltageOk** | | | | | |
|---|---|---|---|---|---|
| State of the DC link voltage<br>0 = OK<br>1 = not OK | | | | | |
| - | | | | UWord | r |
| Multi-line: yes | Axis index | | numMachAxes | | |

© Siemens AG 2004 All Rights Reserved

| **driveMotorTempWarn** | | | | | |
|---|---|---|---|---|---|
| Motor temperature warning<br>0 = temperature OK<br>1 = overtemperature | | | | | |
| - | | | | UWord | r |
| Multi-line: yes | Axis index | | numMachAxes | | |

| **driveNumCrcErrors** | | | | | |
|---|---|---|---|---|---|
| CRC errors on the drive bus<br>(transmission errors when writing data to the 611D; values may range up to FFFFH)<br>0 = no error | | | | | |
| - | | | | UWord | r |
| Multi-line: yes | Axis index | | numMachAxes | | |

| **driveParked** | | | | | |
|---|---|---|---|---|---|
| Parking axis<br>0 = no parking axis<br>1 = parking axis | | | | | |
| - | | | | UWord | r |
| Multi-line: yes | Axis index | | numMachAxes | | |

| **drivePowerOn** | | | | | |
|---|---|---|---|---|---|
| Drive switched on<br>0 = drive not switched on<br>1 = drive switched on | | | | | |
| - | | | | UWord | r |
| Multi-line: yes | Axis index | | numMachAxes | | |

| **driveProgMessages** | | | | | |
|---|---|---|---|---|---|
| Configurable messages (via machine data) | | | | | |
| - | | | | UWord | r |
| Multi-line: yes | Axis index | | numMachAxes | | |

| **driveReady** | | | | | |
|---|---|---|---|---|---|
| Drive ready<br>0 = drive not ready<br>1 = drive ready | | | | | |
| - | | | | UWord | r |
| Multi-line: yes | Axis index | | numMachAxes | | |

| **driveRunLevel** | | | | | |
|---|---|---|---|---|---|
| Current state reached during the boot process<br>(range: coarse state (0 to 5) * 100 + fine state (up to 22)<br>Booting the firmware ---> 0 XX<br>entering the configuration ---> 1XX<br>hardware-init, communication-init<br>loading, converting data ---> 2XX<br>changing bus addressing ---> 3XX<br>preparing synchronization ---> 4XX<br>activating interrupt ---> 519<br><br>XX ==> fine state | | | | | |
| - | | | | UWord | r |
| Multi-line: yes | Axis index | | numMachAxes | | |

© Siemens AG 2004 All Rights Reserved

| **driveSetupMode** | | | | | |
|---|---|---|---|---|---|
| Set-up mode<br>0 = not active<br>1 = active | | | | | |
| - | | | | UWord | r |
| Multi-line: yes | Axis index | | numMachAxes | | |

| **driveSpeedSmoothing** | | | | | |
|---|---|---|---|---|---|
| Smoothing the desired value of the rotary speed, for linear drives: smoothing the desired value of the velocity<br>0 = no smoothing<br>1 = smoothing | | | | | |
| - | | | | UWord | r |
| Multi-line: yes | Axis index | | numMachAxes | | |

| **effComp1** | | | | | |
|---|---|---|---|---|---|
| Sum of the compensation values for encoder 1. The value results from: temperature compensation, backlash compensation, quadrant error compensation, beam sag compensation, leadscrew error compensation. The physical unit is defined in measUnit (in this module). | | | | | |
| mm, inch, degree, user defined | | | | Double | r |
| Multi-line: yes | Axis index | | numMachAxes | | |

| **effComp2** | | | | | |
|---|---|---|---|---|---|
| Sum of the compensation values for encoder 2. The value results from: temperature compensation, backlash compensation, quadrant error compensation, beam sag compensation, leadscrew error compensation. The physical unit is defined in measUnit (in this module). | | | | | |
| mm, inch, degree, user defined | | | | Double | r |
| Multi-line: yes | Axis index | | numMachAxes | | |

| **encChoice** | | | | | |
|---|---|---|---|---|---|
| Active encoder<br>0 = does not exist<br>1 = encoder 1<br>2 = encoder 2 | | | | | |
| - | | | | UWord | r |
| Multi-line: yes | Axis index | | numMachAxes | | |

| **fctGenState** | | | | | |
|---|---|---|---|---|---|
| State of the function generator | | | | | |
| - | | | | UWord | r |
| Multi-line: yes | Axis index | | numMachAxes | | |

| **feedRateOvr** | | | | | |
|---|---|---|---|---|---|
| Feedrate override (only if axis is a positioning axis) | | | | | |
| % | | | | Double | r |
| Multi-line: yes | Axis index | | numMachAxes | | |

| **focStat** | $AA_FOC[x] | | | | |
|---|---|---|---|---|---|
| Current status of "Travel with limited torque" function<br>0-2<br>0: FOC not active<br>1: FOC modal active (programming of FOCON[])<br>2: FOC non-modal active (programming of FOC[]) | | | | | |
| - | 0 | 0 | 2 | UWord | r |
| Multi-line: yes | Axis index | | numMachAxes | | |

© Siemens AG 2004 All Rights Reserved

| **fxsInfo** | $VA_FXS_INFO[Achse] | | | | |
|---|---|---|---|---|---|
| Additional information on travel to fixed stop if<br>$VA_FXS[]=2, or OPI variable /C/SEMA/fxsStat=2.<br>0 No additional information available<br>1 No approach motion programmed<br>2 Programmed end position reached, movement ended<br>3 Abort by NC RESET (Reset key)<br>4 Fixed stop window exited<br>5 Torque reduction was rejected by drive<br>6 PLC has canceled enable signals | | | | | |
| - | 0 | 0 | 6 | UWord | r |
| Multi-line: yes | Axis index | | numMachAxes | | |

| **fxsStat** | $AA_FXS[x] x = Axis | | | | |
|---|---|---|---|---|---|
| State after travelling to fixed stop<br>0 = normal control<br>1 = fixed stop reached<br>2 = failed | | | | | |
| - | | | | UWord | r |
| Multi-line: yes | Axis index | | numMachAxes | | |

| **handwheelAss** | | | | | |
|---|---|---|---|---|---|
| Number of handwheel assigned to an axis<br>0 = no handwheel assigned<br>1 to 3 = handwheel number | | | | | |
| - | | 0 | 3 | UWord | r |
| Multi-line: yes | Axis index | | numMachAxes | | |

| **impulseEnable** | | | | | |
|---|---|---|---|---|---|
| Impulse enable for drive<br>0 = not enabled<br>1 = enabled | | | | | |
| - | | | | UWord | r |
| Multi-line: yes | Axis index | | numMachAxes | | |

| **index** | | | | | |
|---|---|---|---|---|---|
| Absolute axis index referring to machine data axis number | | | | | |
| - | | | | UWord | r |
| Multi-line: yes | Axis index | | numMachAxes | | |

| **isDriveUsed** | | | | | |
|---|---|---|---|---|---|
| One or more machine axes are assigned to each drive.<br>The drive can only be controlled at any one time by one of these machine axes. The machine manufacturer makes the selection.<br>The status of the drive control changes dynamically. | | | | | |
| - | 0 | 0 | 1 | UWord | r |
| Multi-line: yes | Axis index | | numMachAxes | | |

| **kVFactor** | | | | | |
|---|---|---|---|---|---|
| position control gain factor | | | | | |
| 16.667 1/s | | | | Double | r |
| Multi-line: yes | Axis index | | numMachAxes | | |

| **lag** | | | | | |
|---|---|---|---|---|---|
| Following error = desired value of position after fine interpolation - actual value of position. The physical unit is defined in measUnit (in this module). | | | | | |
| mm, inch, degree, user defined | | | | Double | r |
| Multi-line: yes | Axis index | | numMachAxes | | |

© Siemens AG 2004 All Rights Reserved

| **logDriveNo** | | | | | |
|---|---|---|---|---|---|
| Drive assignment (logical drive number)<br>0 = not available<br>1 to 15 = drive number | | | | | |
| - | | 0 | 15 | UWord | r |
| Multi-line: yes | Axis index | | numMachAxes | | |

| **measFctState** | | | | | |
|---|---|---|---|---|---|
| State of the probing function | | | | | |
| - | | | | UWord | r |
| Multi-line: yes | Axis index | | numMachAxes | | |

| **measPos1** | | | | | |
|---|---|---|---|---|---|
| Actual value of position for encoder 1. The physical unit is defined in measUnit (in this module). | | | | | |
| mm, inch, degree, user defined | | | | Double | r |
| Multi-line: yes | Axis index | | numMachAxes | | |

| **measPos2** | | | | | |
|---|---|---|---|---|---|
| Actual value of position for encoder 2. The physical unit is defined in measUnit (in this module). | | | | | |
| mm, inch, degree, user defined | | | | Double | r |
| Multi-line: yes | Axis index | | numMachAxes | | |

| **measPosDev** | | | | | |
|---|---|---|---|---|---|
| Actual position difference between the two encoders. The physical unit is defined in measUnit (in this module). | | | | | |
| mm, inch, degree, user defined | | | | Double | r |
| Multi-line: yes | Axis index | | numMachAxes | | |

| **measUnit** | | | | | |
|---|---|---|---|---|---|
| Unit for service values of the drives<br>0 = mm<br>1 = inch<br>2 = grd | | | | | |
| - | | | | UWord | r |
| Multi-line: yes | Axis index | | numMachAxes | | |

| **paramSetNo** | | | | | |
|---|---|---|---|---|---|
| Number of parameter set | | | | | |
| - | | 1 | 8 | UWord | r |
| Multi-line: yes | Axis index | | numMachAxes | | |

| **preContrFactTorque** | | | | | |
|---|---|---|---|---|---|
| Feed forward control factor torque | | | | | |
| Nm | | | | Double | r |
| Multi-line: yes | Axis index | | numMachAxes | | |

| **preContrFactVel** | | | | | |
|---|---|---|---|---|---|
| Feed forward control factor velocity | | | | | |
| - | | | | Double | r |
| Multi-line: yes | Axis index | | numMachAxes | | |

© Siemens AG 2004 All Rights Reserved

| **preContrMode** | | | | | |
|---|---|---|---|---|---|
| Feed forward control mode<br>0 = inactive<br>1 = velocity feed forward<br>2 = torque feed forward | | | | | |
| - | | | | UWord | r |
| Multi-line: yes | Axis index | | numMachAxes | | |

| **PRESETActive** | | | | | |
|---|---|---|---|---|---|
| Preset state<br>0 = no preset active<br>1 = preset active | | | | | |
| - | | | | UWord | r |
| Multi-line: yes | Axis index | | numMachAxes | | |

| **PRESETVal** | $AC_PRESET[x] x = Axis | | | | |
|---|---|---|---|---|---|
| The function PRESETON (...) programs a zero offset for an axis. The value of the offset is stored in the variable 'PRESETVal'. The variable can be overwritten by the part program and by the MMC. | | | | | |
| mm, inch, user defined | | | | Double | wr |
| Multi-line: yes | Axis index | | numMachAxes | | |

| **progIndexAxPosNo** | | | | | |
|---|---|---|---|---|---|
| Programmed indexing position number<br>0 = no indexing position<br>>0 = indexing position number | | | | | |
| - | | | | UWord | r |
| Multi-line: yes | Axis index | | numMachAxes | | |

| **qecLrnIsOn** | | | | | |
|---|---|---|---|---|---|
| Quadrant error compensation learning active<br>0 = inactive<br>1 = Neuronal-QEC learning active<br>2 = Standard-QEC active<br>3 = Standard-QEC with adaption of the correction value active<br>4 = Neuronal-QEC active<br>5 = Neuronal-QEC with adaption of the measuring time active<br>6 = Neuronal-QEC with adaption of the decay time of the correction value active<br>7 = Neuronal-QEC with adaption of the measuring time and the decay time of the correction value active | | | | | |
| - | | 0 | 7 | UWord | r |
| Multi-line: yes | Axis index | | numMachAxes | | |

| **refPtBusy** | | | | | |
|---|---|---|---|---|---|
| Axis is being referenced<br>0 = axis is not being referenced<br>1 = axis is being referenced | | | | | |
| - | | | | UWord | r |
| Multi-line: yes | Axis index | | numMachAxes | | |

| **refPtCamNo** | | | | | |
|---|---|---|---|---|---|
| Reference point cam<br>0 = no cam approached<br>1 = cam 1<br>2 = cam 2<br>3 = cam 3<br>4 = cam 4 | | | | | |
| - | | | | UWord | r |
| Multi-line: yes | Axis index | | numMachAxes | | |

© Siemens AG 2004 All Rights Reserved

| **refPtStatus** | | | | | |
|---|---|---|---|---|---|
| Identifier indicating whether an axis is liable for reference and actually is referenced.<br>Note for changing axes into another channel:<br>In general a changable axis is only liable for reference in the channel it is presently assigned to. Thus a referenced changable axis is announced to the channel it is presently being moved in with the value 3 (liable for reference and referenced) and to all other channels with the value 1 (not liable for reference but referenced).<br><br>A set bit means:<br><br>Until SW release 3.1:<br>bit0: at least 1 measuring system has been referenced<br>bit1: active measuring system is liable for reference<br><br>From SW release 3.2:<br>bit0: active measuring system has been referenced<br>bit1: active measuring system is liable for reference<br>(The busy signal effects the state) | | | | | |
| - | Achsindex | | | UWord | r |
| Multi-line: no | | | numMachAxes | | |

| **safeAcceptCheckPhase** | | | | | |
|---|---|---|---|---|---|
| Flag for NCK-side acceptance test phase, the human-machine interface can determine which acceptance test phase is present on the NCK.<br><br>0: NCK has acceptance test phase inactive = 0<br>0ACH: NCK has acceptance test phase active | | | | | |
| - | 0 | 0 | 0ACH | UWord | r |
| Multi-line: yes | Axis index | | numMachAxes | | |

| **safeAcceptTestMode** | | | | | |
|---|---|---|---|---|---|
| SI PowerOn alarms can be acknowledged by Reset in acceptance test mode<br>0: Acceptance test mode: SI PowerOn alarms cannot be acknowledged by Reset<br>0ACH: Acceptance test mode: SI PowerOn alarms can be acknowledged by Reset | | | | | |
| - | 0 | 0 | 0FFH | UWord | wr |
| Multi-line: yes | Axis index | | numMachAxes | | |

| **safeAcceptTestPhase** | | | | | |
|---|---|---|---|---|---|
| Flag for acceptance test phase<br>0: Acceptance test Wizard not selected, activate NCK-side alarm suppression<br>0ACH: Dialogs for acceptance test support selected, deactivate NCK-side alarm suppression | | | | | |
| - | 0 | 0 | 0FFH | UWord | wr |
| Multi-line: yes | Axis index | | numMachAxes | | |

| **safeAcceptTestSE** | | | | | |
|---|---|---|---|---|---|
| Flag for NCK-side SE acceptance test. The human-machine interface starts checking the safe limit positions during the acceptance test<br><br>0: NCK has SE acceptance test inactive = 0. The single channel SW limit positions are activated.<br>0ACH: NCK is to activate SE acceptance test. The single channel SW limit positions are deactivated in this way. | | | | | |
| - | 0 | 0 | 0ACH | UWord | r |
| Multi-line: yes | Axis index | | numMachAxes | | |

| **safeAcceptTestState** | | | | | |
|---|---|---|---|---|---|
| Flag for acceptance test status, the human-machine interface can determine which acceptance test mode is present on the NCK.<br>0: NCK has acceptance test mode inactive<br>0CH: Acceptance test mode not activated because SI PowerOn alarms already present.<br>The causes of the SI PowerOn alarms must be eliminated first.<br>0DH: Acceptance test mode not activated, the HMI writes invalid values in /C/SEMA/safeAcceptTestMode to the NCK.<br>0ACH: NCK has acceptance test mode active | | | | | |
| - | 0 | 0 | 0FFH | UWord | r |
| Multi-line: yes | Axis index | | numMachAxes | | |

© Siemens AG 2004 All Rights Reserved

| **safeActPosDiff** | | | | | |
|---|---|---|---|---|---|
| Current actual value difference betw. NCK and drive monitoring channels | | | | | |
| mm, inch, degree, user defined | 0.0 | | | Double | r |
| Multi-line: yes | Axis index | | numMachAxes | | |

| **safeActVeloDiff** | | | | | |
|---|---|---|---|---|---|
| Current speed difference between NCK and drive monitoring channels | | | | | |
| mm/min, inch/min, user defined | 0.0 | | | Double | r |
| Multi-line: yes | Axis index | | numMachAxes | | |

| **safeActVeloLimit** | | | | | |
|---|---|---|---|---|---|
| Safe limit of actual speed<br>-1 => no actual speed limit active<br>>= 0 => limit of actual speed is active | | | | | |
| mm, inch, degree, user defined | | -1 | | Double | r |
| Multi-line: no | | | numMachAxes | | |

| **safeDesVeloLimit** | | | | | |
|---|---|---|---|---|---|
| Safe limit of desired speed<br>-1 => no desired speed limit active<br>>= 0 => desired speed limit is active | | | | | |
| mm, inch, degree, user defined | | -1 | | Double | r |
| Multi-line: no | | | numMachAxes | | |

| **safeFctEnable** | | | | | |
|---|---|---|---|---|---|
| Safe operation active<br>0 = not activated<br>1 = activated | | | | | |
| - | | | | UWord | r |
| Multi-line: yes | Axis index | | numMachAxes | | |

| **safeInputSig** | | | | | |
|---|---|---|---|---|---|
| Safe input signals of the axis | | | | | |
| - | | | | UWord | r |
| Multi-line: yes | Axis index | | numMachAxes | | |

| **safeInputSig2** | | | | | |
|---|---|---|---|---|---|
| Safe input signals part 2 | | | | | |
| - | | 0 | 0xffff | UWord | r |
| Multi-line: no | | | numMachAxes | | |

| **safeInputSigDrive** | | | | | |
|---|---|---|---|---|---|
| Safe input signals of the drive | | | | | |
| - | | | | UWord | r |
| Multi-line: yes | Axis index | | numMachAxes | | |

| **safeInputSigDrive2** | | | | | |
|---|---|---|---|---|---|
| Safe input signals of the drive part 2 | | | | | |
| - | | 0 | 0xffff | UWord | r |
| Multi-line: no | | | numMachAxes | | |

© Siemens AG 2004 All Rights Reserved

| **safeMaxVeloDiff** | | | | | |
|---|---|---|---|---|---|
| Maximum speed difference between NCK and drive monitoring channels since last NCK Reset | | | | | |
| mm/min, inch/min, user defined | 0.0 | | | Double | r |
| Multi-line: yes | Axis index | | numMachAxes | | |

| **safeMeasPos** | $VA_IS[x] x = Axis | | | | |
|---|---|---|---|---|---|
| Safe actual position of the axis. The physical unit is defined in the variable measUnit (in this module). | | | | | |
| mm, inch, degree, user defined | | | | Double | r |
| Multi-line: yes | Axis index | | numMachAxes | | |

| **safeMeasPosDrive** | | | | | |
|---|---|---|---|---|---|
| Safe actual position of drive. The physical unit is defined in measUnit (in this module). | | | | | |
| mm, inch, degree, user defined | | | | Double | r |
| Multi-line: yes | Axis index | | numMachAxes | | |

| **safeOutputSig** | | | | | |
|---|---|---|---|---|---|
| Safe output signals of the axis | | | | | |
| - | | | | UWord | r |
| Multi-line: yes | Axis index | | numMachAxes | | |

| **safeOutputSig2** | | | | | |
|---|---|---|---|---|---|
| Safe output signals part 2 | | | | | |
| - | | 0 | 0xffff | UWord | r |
| Multi-line: no | | | numMachAxes | | |

| **safeOutputSigDrive** | | | | | |
|---|---|---|---|---|---|
| Safe output signals of the drive | | | | | |
| - | | | | UWord | r |
| Multi-line: yes | Axis index | | numMachAxes | | |

| **safeOutputSigDrive2** | | | | | |
|---|---|---|---|---|---|
| Safe output signals of the drive part 2 | | | | | |
| - | | 0 | 0xffff | UWord | r |
| Multi-line: no | | | numMachAxes | | |

| **safeStopOtherAxis** | | | | | |
|---|---|---|---|---|---|
| Stop on another axis<br>0: No stop on another axis<br>1: Stop on another axis | | | | | |
| - | 0 | 0 | 1 | UWord | r |
| Multi-line: yes | Axis index | | numMachAxes | | |

| **spec** | | | | | |
|---|---|---|---|---|---|
| Axis specification<br>0 = path axis<br>1 = positioning axis | | | | | |
| - | | | | UWord | r |
| Multi-line: yes | Axis index | | numMachAxes | | |

| **subSpec** | | | | | T1 |
|---|---|---|---|---|---|
| Subspecification<br>0 = normal axis<br>1 = indexing axis | | | | | |
| - | | | | UWord | r |
| Multi-line: yes | Axis index | | numMachAxes | | |

© Siemens AG 2004 All Rights Reserved

| **torqLimit** | | | | | |
|---|---|---|---|---|---|
| Torque limitation value (referring to the nominal value of the drive). For linear motors: force limitation value. | | | | | |
| % | | | | Double | r |
| Multi-line: yes | Axis index | | numMachAxes | | |

| **traceState1** | | | | | |
|---|---|---|---|---|---|
| State of trace channel 1<br>0 = idle state<br>1 = recording started<br>2 = trigger reached<br>3 = recording ended<br>4 = recording aborted | | | | | |
| - | | | | UWord | r |
| Multi-line: yes | Axis index | | numMachAxes | | |

| **traceState2** | | | | | |
|---|---|---|---|---|---|
| State of trace channel 2<br>0 = idle state<br>1 = recording started<br>2 = trigger reached<br>3 = recording ended<br>4 = recording aborted | | | | | |
| - | | | | UWord | r |
| Multi-line: yes | Axis index | | numMachAxes | | |

| **traceState3** | | | | | |
|---|---|---|---|---|---|
| State of trace channel 3<br>0 = idle state<br>1 = recording started<br>2 = trigger reached<br>3 = recording ended<br>4 = recording aborted | | | | | |
| - | | | | UWord | r |
| Multi-line: yes | Axis index | | numMachAxes | | |

| **traceState4** | | | | | |
|---|---|---|---|---|---|
| State of trace channel 4<br>0 = idle state<br>1 = recording started<br>2 = trigger reached<br>3 = recording ended<br>4 = recording aborted | | | | | |
| - | | | | UWord | r |
| Multi-line: yes | Axis index | | numMachAxes | | |

| **trackErrContr** | | | | | |
|---|---|---|---|---|---|
| Position controller difference (actual value / desired value of position) | | | | | |
| mm, inch, degree, user defined | | | | Double | r |
| Multi-line: yes | Axis index | | numMachAxes | | |

| **trackErrDiff** | | | | | |
|---|---|---|---|---|---|
| Contour deviation (difference actual value of position and calculated dynamical model) | | | | | |
| mm, inch, degree, user defined | | | | Double | r |
| Multi-line: yes | Axis index | | numMachAxes | | |

© Siemens AG 2004 All Rights Reserved

| **type** | | | | | |
|---|---|---|---|---|---|
| Axis type<br>1 = linear axis<br>2 = rotary axis<br>3 = spindle | | | | | |
| - | | | | UWord | r |
| Multi-line: yes | Axis index | | numMachAxes | | |

| **vaDistTorque** | $VA_DIST_TORQUE[Achse] | | | | |
|---|---|---|---|---|---|
| Disturbing torque/max. torque (motor end, York) | | | | | |
| % | 0 | -100 | 100 | Double | r |
| Multi-line: yes | Axis index | | numMachAxes | | |

| **vaDpe** | $VA_DPE[x1] | | | | |
|---|---|---|---|---|---|
| Status of power enable of a machine axis<br>0 - 1 | | | | | |
| - | 0 | 0 | 1 | UWord | r |
| Multi-line: yes | Axis index | | numMachAxes | | |

| **valm** | $VA_IM[x] | | | | |
|---|---|---|---|---|---|
| Encoder actual value in the machine coordinate system (measured active measuring system) | | | | | |
| - | 0 | 0 | | Double | r |
| Multi-line: yes | Axis index | | numMachAxes | | |

| **valm1** | $VA_IM1[x] | | | | |
|---|---|---|---|---|---|
| Actual value in the machine coordinate system (measured encoder 1) | | | | | |
| - | 0 | 0 | | Double | r |
| Multi-line: yes | Axis index | | numMachAxes | | |

| **valm2** | $VA_IM2[x] | | | | |
|---|---|---|---|---|---|
| Actual value in the machine coordinate system (measured encoder 2) | | | | | |
| - | 0 | 0 | | Double | r |
| Multi-line: yes | Axis index | | numMachAxes | | |

| **vaTorqueAtLimit** | $VA_TORQUE_AT_LIMIT[Achse] | | | | |
|---|---|---|---|---|---|
| Status "effective torque equals specified torque limit"<br><br>0: Effective torque lower than torque limit<br>1: Effective torque has reached torque limit | | | | | |
| - | 0 | 0 | 1 | UWord | r |
| Multi-line: yes | Axis index | | numMachAxes | | |

| **vaVactm** | $VA_VACTM[x] x = Axis | | | | |
|---|---|---|---|---|---|
| Axis velocity actual value on the load side in the MCS | | | | | |
| - | | | | Double | r |
| Multi-line: yes | Axis index | | numMachAxes | | |

© Siemens AG 2004 All Rights Reserved

## 3.5.3 Area C, Mod. SGA: State data: Geometry axes in tool offset memory

**OEM-MMC: Linkitem** /Channel/GeometricAxis/...

All status data that are dependent on machine movement and specified in the workpiece coordinate system are included in module SGA. Supplementary information can be found in module SEGA. The individual variables are defined as arrays where the line index is the number of the axis (assigned to the current channel).The variable "name" in module SGA with the line index in question identifies the axis.
The assignment of the line indices in modules SGA and SEGA is identical.

With SW 5.2 and later, OPI modules SGA and SEGA can be addressed via the geo-axis no. instead of via the channel axis no.:
Line index 1001: 1st geo-axis
Line index 1002: 2nd geo-axis
Line index 1003: 3rd geo-axis

The number of channel axes (geometry, special axes and spindles) can be found in "numMachAxes" in module Y in area C.

| **actIncrVal** | | | | | |
|---|---|---|---|---|---|
| Active INC weighting of the axis<br>0 = INC_10000<br>1 = INC_1000<br>2 = INC_100<br>3 = INC_10<br>4 = INC_1<br>5 = INC_VAR<br>6 = INC_JOG_CONT<br>7 = no increment mode has been set | | | | | |
| - | | | | UWord | r |
| Multi-line: yes | Axis index | | numMachAxes | | |

| **actProgPos** | | | | | |
|---|---|---|---|---|---|
| Programmed position, actual value. The physical unit is defined in the variable extUnit (in this module) | | | | | |
| mm, inch, degree, user defined | | | | Double | r |
| Multi-line: yes | Axis index | | numMachAxes | | |

| **actToolBasePos** | $AA_IW[x] x = Axis | | | | |
|---|---|---|---|---|---|
| Tool base position. Physical unit is defined in the variable extUnit (from this module) | | | | | |
| mm, inch, degree, user defined | | | | Double | r |
| Multi-line: yes | Axis index | | numMachAxes | | |

| **actToolEdgeCenterPos** | | | | | |
|---|---|---|---|---|---|
| Center point of a cutting edge. Physical unit is defined in the variable extUnit (from this module) | | | | | |
| mm, inch, degree, user defined | | | | Double | r |
| Multi-line: yes | Axis index | | numMachAxes | | |

© Siemens AG 2004 All Rights Reserved

| **cmdProgPos** | | | | | |
|---|---|---|---|---|---|
| Programmed position, desired value. Physical unit is defined in the variable extUnit (in this module) | | | | | |
| mm, inch, degree, user defined | | | | Double | r |
| Multi-line: yes | Axis index | | numMachAxes | | |

| **cmdToolBasePos** | | | | | |
|---|---|---|---|---|---|
| Tool base position, desired value . Physical unit is defined in variable extUnit (in this module). | | | | | |
| mm, inch, degree, user defined | | | | Double | r |
| Multi-line: yes | Axis index | | numMachAxes | | |

| **cmdToolEdgeCenterPos** | | | | | |
|---|---|---|---|---|---|
| Position of the cutting edge center point. Physical unit is defined in variable extUnit (in this module). | | | | | |
| mm, inch, degree, user defined | | | | Double | r |
| Multi-line: yes | Axis index | | numMachAxes | | |

| **extUnit** | | | | | |
|---|---|---|---|---|---|
| Current physical unit of the related geometry axis or auxiliary axis<br>0 = mm<br>1 = inch<br>2 = degree<br>3 = indexing position<br>4 = userdef | | | | | |
| - | | | | UWord | r |
| Multi-line: yes | Axis index | | numMachAxes | | |

| **name** | | | | | |
|---|---|---|---|---|---|
| Axis name | | | | | |
| - | | | | String[32] | r |
| Multi-line: yes | Axis index | | numMachAxes | | |

| **progDistToGo** | | | | | |
|---|---|---|---|---|---|
| Programmed position, distance-to-go. The physical unit is defined in the variable extUnit (in this module). | | | | | |
| mm, inch, degree, user defined | | | | Double | r |
| Multi-line: yes | Axis index | | numMachAxes | | |

| **progREPOS** | | | | | |
|---|---|---|---|---|---|
| Programmed position, REPOS. The physical unit is defined in the variable extUnit (in this module). | | | | | |
| mm, inch, degree, user defined | | | | Double | r |
| Multi-line: yes | Axis index | | numMachAxes | | |

| **status** | | | | | |
|---|---|---|---|---|---|
| Axis state<br>0 = travel command in plus direction<br>1 = travel command in minus direction<br>2 = exact stop coarse reached<br>3 = exact stop fine reached | | | | | |
| - | | | | UWord | r |
| Multi-line: yes | Axis index | | numMachAxes | | |

© Siemens AG 2004 All Rights Reserved

| **subType** | | | | | |
|---|---|---|---|---|---|
| Axis type geometry or auxiliary axis<br>0 = auxiliary axis<br>1 = geometry axis<br>2 = orientation axis | | | | | |
| - | | | | UWord | r |
| Multi-line: yes | Axis index | | numMachAxes | | |

| **toolBaseDistToGo** | | | | | |
|---|---|---|---|---|---|
| Tool base distance-to-go. Physical unit is defined in the variable extUnit (in this module) | | | | | |
| mm, inch, degree, user defined | | | | Double | r |
| Multi-line: yes | Axis index | | numMachAxes | | |

| **toolBaseREPOS** | | | | | |
|---|---|---|---|---|---|
| Tool base REPOS. Physical unit is defined in the variable extUnit (in this module). | | | | | |
| mm, inch, degree, user defined | | | | Double | r |
| Multi-line: yes | Axis index | | numMachAxes | | |

| **toolEdgeCenterDistToGo** | | | | | |
|---|---|---|---|---|---|
| Center point of cutting edge distance-to-go. Physical unit results from the variable extUnit (in this module) | | | | | |
| mm, inch, degree, user defined | | | | Double | r |
| Multi-line: yes | Axis index | | numMachAxes | | |

| **toolEdgeCenterREPOS** | | | | | |
|---|---|---|---|---|---|
| Center point of the cutting edge REPOS. Physical unit is defined in the variable extUnit (in this module). | | | | | |
| mm, inch, degree, user defined | | | | Double | r |
| Multi-line: yes | Axis index | | numMachAxes | | |

| **varIncrVal** | | | | | |
|---|---|---|---|---|---|
| Setable value for INC_VAR. The physical unit depends on whether the axis is rotary or linear. Linear axes: 1mm rotary axes: 1/1000 degrees | | | | | |
| mm, inch, degree, user defined | | | | Double | wr |
| Multi-line: yes | Axis index | | numMachAxes | | |

© Siemens AG 2004 All Rights Reserved

## 3.5.4 Area C, Mod. SEGA: State data: Geometry axes in tool offset memory (extension of SGA)

**OEM-MMC: Linkitem** /Channel/GeometricAxis/...

All status data that are dependent on machine movement and specified in the workpiece coordinate system are combined in module SGA. Supplementary information can be found in module SEGA. The individual variables are defined as arrays where the line index is the number of the axis (assigned to the current channel).The variable "name" in module SGA with the line index in question identifies the axis.
The assignment of the line indices in modules SGA and SEGA is identical.

With SW 5.2 and later, OPI modules SGA and SEGA can be addressed via the geo-axis no. instead of via the channel axis no.:
Line index 1001: 1st geo-axis
Line index 1002: 2nd geo-axis
Line index 1003: 3rd geo-axis

The number of channel axes (geometry, special axes and spindles) can be found in "numMachAxes" in module Y in area C.

| **aaDelt** | $AA_DELT[x] x = Axis | | | | |
|---|---|---|---|---|---|
| Stored axial distance-to-go in the WCS after axial delete-distance-to-go DELDTG(axis) for synchronous actions (Note: for SYNACT only) | | | | | |
| - | | | | Double | r |
| Multi-line: yes | Axis index | | numMachAxes | | |

| **aaDtbw** | $AA_DTBW[x] x = Aaxis | | | | |
|---|---|---|---|---|---|
| Axial distance from the beginning of the block in the WCS for positioning and synchronous axes for synchronous motion (Note: for SYNACT only) | | | | | |
| - | | | | Double | r |
| Multi-line: yes | Axis index | | numMachAxes | | |

| **aaDtepw** | $AA_DTEPW[x] x = Axis | | | | |
|---|---|---|---|---|---|
| Axial distance-to-go for infeed during oscillation in the WCS (Note: for SYNACT only) | | | | | |
| - | | | | Double | r |
| Multi-line: yes | Axis index | | numMachAxes | | |

| **aaDtew** | $AA_DTEW[x] x = Axis | | | | |
|---|---|---|---|---|---|
| Axial distance to the end of the block in the WCS for positioning and synchronous axes for synchronous actions (Note: for SYNACT only) | | | | | |
| - | | | | Double | r |
| Multi-line: yes | Axis index | | numMachAxes | | |

| **aaIbCorr** | $AA_IB_CORR | | | | |
|---|---|---|---|---|---|
| Current BCS setpoint value of an axis including override components | | | | | |
| - | | | | Double | r |
| Multi-line: yes | Axis index | | numMachAxes | | |

© Siemens AG 2004 All Rights Reserved

| **aaIwCorr** | $AA_IW_CORR | | | | |
|---|---|---|---|---|---|
| Current WCS setpoint value of an axis including override components | | | | | |
| - | | | | Double | r |
| Multi-line: yes | Axis index | | numMachAxes | | |

| **aaMw** | $AA_MW[x] x = Axis | | | | |
|---|---|---|---|---|---|
| Latched probe position retransformed in the WCS | | | | | |
| - | | | | Double | wr |
| Multi-line: yes | Axis index | | numMachAxes | | |

| **aaMw1** | | | | | $AA_MW1 [Achse] |
|---|---|---|---|---|---|
| Access to measurement result of trigger event 1 in the WCS | | | | | |
| - | | | | Double | wr |
| Multi-line: yes | Axis index | | numMachAxes | | |

| **aaMw2** | | | | | $AA_MW2 [Achse] |
|---|---|---|---|---|---|
| Access to measurement result of trigger event 2 in the WCS | | | | | |
| - | | | | Double | wr |
| Multi-line: yes | Axis index | | numMachAxes | | |

| **aaMw3** | | | | | $AA_MW3 [Achse] |
|---|---|---|---|---|---|
| Access to measurement result of trigger event 3 in the WCS | | | | | |
| - | | | | Double | wr |
| Multi-line: yes | Axis index | | numMachAxes | | |

| **aaMw4** | | | | | $AA_MW4 [Achse] |
|---|---|---|---|---|---|
| Access to measurement result of trigger event 4 in the WCS | | | | | |
| - | | | | Double | wr |
| Multi-line: yes | Axis index | | numMachAxes | | |

| **aaTOff** | $AA_TOFF[ ] | | | | |
|---|---|---|---|---|---|
| Value of the superimposed motions which have been retracted in the individual tool directions via $AA_TOFF[ ] | | | | | |
| mm, inch, user defined | 0 | | | Double | r |
| Multi-line: yes | 1000 + geo axis number | | 1000 + numGeoAxes | | |

| **aaTOffLimit** | $AA_TOFF_LIMIT[ ] | | | | |
|---|---|---|---|---|---|
| Limiting value of the superimposed motion has been achieved in the tool direction via $AA_TOFF[ ]<br><br>0 : Limiting value not achieved<br>1 : Limiting value achieved in positive direction<br>11 : Limiting value achieved in negative direction | | | | | |
| - | 0 | 0 | 11 | UWord | r |
| Multi-line: yes | 1000 + geo axis number | | 1000 + numGeoAxes | | |

© Siemens AG 2004 All Rights Reserved

| **aaTOffPrepDiff** | $AA_TOFF_PREP_DIFF[ ] | | | | |
|---|---|---|---|---|---|
| Difference between the current value of $AA_TOFF[] and the value as the current block was prepared. | | | | | |
| mm, inch, user defined | 0 | | | Double | r |
| Multi-line: yes | 1000 + geo axis number | | 1000 + numGeoAxes | | |

| **aaTOffVal** | $AA_TOFF_VAL[ ] | | | | |
|---|---|---|---|---|---|
| Integrated value of the superimposed motions which have been retracted in the individual tool directions via $AA_TOFF[ ] | | | | | |
| mm, inch, user defined | 0 | | | Double | r |
| Multi-line: yes | 1000 + geo axis number | | 1000 + numGeoAxes | | |

| **aaVactW** | $AA_VACTW[X] | | | | |
|---|---|---|---|---|---|
| Axis velocity in workpiece coordinate system | | | | | |
| mm/min, inch/min, user defined | 0.0 | | | Double | r |
| Multi-line: yes | Axis index | | numMachAxes | | |

| **acRetpoint** | $AC_RETPOINT[x] x = Axis | | | | |
|---|---|---|---|---|---|
| Return point on the contour for repositioning | | | | | |
| - | | | | Double | r |
| Multi-line: yes | Axis index | | numMachAxes | | |

| **actDistToGoEns** | | | | | |
|---|---|---|---|---|---|
| Distance-to-go in the SZS based on the programmed position | | | | | |
| - | | | | Double | r |
| Multi-line: yes | Axis index | | numMachAxes | | |

| **actFeedRate** | | | | | S5 |
|---|---|---|---|---|---|
| Actual value of axis-specific feedrate, if the axis is a positioning axis. | | | | | |
| mm/min, inch/min, user defined | | | | Double | r |
| Multi-line: yes | Axis index | | numMachAxes | | |

| **actProgPosBKS** | $AA_IBORI | | | | |
|---|---|---|---|---|---|
| Actual value of geometry and orientation axes in basic coordinate system | | | | | |
| mm, inch, degree, user defined | 0.0 | | | Double | r |
| Multi-line: yes | Axis index | | numMachAxes | | |

| **actToolBasePosBasic** | | | | | |
|---|---|---|---|---|---|
| Base position of the active tool in the base system (inch/metrical) | | | | | |
| mm, inch, degree, user defined | 0.0 | | | Double | r |
| Multi-line: yes | Axis index | | numMachAxes | | |

| **actToolBasePosBasicDiam** | | | | | |
|---|---|---|---|---|---|
| Corresponds to actToolBasePosBasic with diameter conversion | | | | | |
| - | | | | Double | r |
| Multi-line: yes | Axis index | | numMachAxes | | |

| **actToolBasePosDiam** | | | | | |
|---|---|---|---|---|---|
| Corresponds to /C/SGA/actToolBasePos with diameter conversion | | | | | |
| - | | | | Double | r |
| Multi-line: yes | Axis index | | numMachAxes | | |

© Siemens AG 2004 All Rights Reserved

| **actToolBasPosBN** | $AA_IBN[x] x=Axis | | | | |
|---|---|---|---|---|---|
| Actual tool base position in relation to basic zero point (SGA:/C/SGA/actToolBasePos without progr. frame and without settable frames) | | | | | |
| mm, inch, degree, user defined | | | | Double | r |
| Multi-line: yes | Axis index | | numMachAxes | | |

| **actToolBasPosBNDiam** | | | | | |
|---|---|---|---|---|---|
| Corresponds to actToolBasPosBN with diameter conversion | | | | | |
| - | | | | Double | r |
| Multi-line: yes | Axis index | | numMachAxes | | |

| **actToolBasPosEN** | $AA_IEN[x] x = Axis | | | | |
|---|---|---|---|---|---|
| Base position of the active tool relative to the workpiece zero point (SGA:/C/SGA/actToolBasePos without programmed frame) | | | | | |
| - | | | | Double | r |
| Multi-line: yes | Axis index | | numMachAxes | | |

| **actToolBasPosENitc** | | | | | |
|---|---|---|---|---|---|
| corresponds to actToolBasPosEN with $DISPLAY_MODE_POSITION=1 | | | | | |
| - | | | | Double | r |
| Multi-line: yes | Axis index | | numMachAxes | | |

| **actToolBasPosENjmp** | | | | | |
|---|---|---|---|---|---|
| corresponds to actToolBasPosEN with $DISPLAY_MODE_POSITION=0 | | | | | |
| - | | | | Double | r |
| Multi-line: yes | Axis index | | numMachAxes | | |

| **actToolEdgeCenterPosEns** | | | | | |
|---|---|---|---|---|---|
| Actual position value in relation to the WOS frame as center-point path, i.e. with tool length but without tool radius | | | | | |
| - | | | | Double | r |
| Multi-line: yes | Axis index | | numMachAxes | | |

| **axisActiveInChan** | | | | | |
|---|---|---|---|---|---|
| Flag indicating whether axis is active in this channel<br>0 = not active<br>1 = active | | | | | |
| - | | | | UWord | r |
| Multi-line: yes | Axis index | | numMachAxes | | |

| **axisFeedRateUnit** | | | | | |
|---|---|---|---|---|---|
| Unit of axial feedrate<br>0 = mm/min<br>1 = mm/rev<br>2 = inch/min | | | | | |
| - | | | | UWord | r |
| Multi-line: yes | Axis index | | numMachAxes | | |

| **cmdFeedRate** | | | | | |
|---|---|---|---|---|---|
| Desired value of axis-specific feedrate for a positioning axis. | | | | | |
| mm/min, inch/min, user defined | | | | Double | r |
| Multi-line: yes | Axis index | | numMachAxes | | |

© Siemens AG 2004 All Rights Reserved

| **cmdToolEdgeCenterPosEnsS** | | | | | |
|---|---|---|---|---|---|
| Programmed position for block search with calculation<br>in relation to the WOS frame as center-point path, i.e. with tool length<br>but without tool radius<br>Note: This variable is not available for the variable service,<br>but only for logging in connection with block search events! | | | | | |
| mm, inch, degree, user defined | | | | Double | r |
| Multi-line: yes | Axis index | | numMachAxes | | |

| **diamonInfo** | | | | | |
|---|---|---|---|---|---|
| Information whether position values are shown as diameter or radius values.<br>This information is relevant for the following variables of the blocks SGA/SEGA:<br><br>- /C/SGA/cmdToolBasePos<br>- /C/SGA/toolBaseDistToGo<br>- /C/SGA/toolBaseREPOS<br>- cmdToolEdgeCenterPos<br>- actToolEdgeCenterPos<br>- toolEdgeCenterDistToGo<br>- toolEdgeCenterREPOS<br>- cmdProgPos<br>- actProgPos<br>- progDistToGo<br>- progREPOS<br>- actToolBasPosEN<br>- cmdToolEdgeCenterPosEnsS<br>- /C/SEGA/actToolEdgeCenterPosEns<br>- actToolBasPosBN<br>- cmdToolBasPosENS<br>- actProgPosBKS<br>- actToolBasePosDiam<br>- actToolBasePosBasicDiam<br>- actToolBasPosBNDiam<br>0: Diameter programming inactive<br>1: Diameter programming active | | | | | |
| - | 0 | 0 | 1 | UWord | r |
| Multi-line: yes | Axis index | | numMachAxes | | |

| **displayAxis** | $MC_DISPLAY_AXIS Bit0-15 | | | | |
|---|---|---|---|---|---|
| Identifier indicating whether the axis is displayed by the MMC as a geometry or auxiliary axis.<br>0 = Do not display at all<br>0xFFFF = Always display everything<br>bit 0 = Display in actual-value window<br>bit 1 = Display in reference point window<br>bit 2 = Display in Preset / Basic offset / Scratching<br>bit 3 = Display in handwheel selection | | | | | |
| - | 0xFFFF | 0 | 0xFFFF | UWord | r |
| Multi-line: yes | Axis index | | numMachAxes | | |

| **drfVal** | $AC_DRF[x] x = Axis | | | | |
|---|---|---|---|---|---|
| DRF value. The physical unit is defined in /C/SGA/extUnit (in module SGA). | | | | | |
| mm, inch, degree, user defined | | | | Double | r |
| Multi-line: yes | Axis index | | numMachAxes | | |

| **dummy** | | | | | |
|---|---|---|---|---|---|
| Added for alignment only, row index may be used later | | | | | |
| - | | | | UWord | |
| Multi-line: no | | | | | |

© Siemens AG 2004 All Rights Reserved

| **feedRateOvr** | | | | | |
|---|---|---|---|---|---|
| Feedrate override if axis is a positioning axis. Multiplying override component which is active in addition to the override factors programmed, set via handwheel or via PLC. | | | | | |
| % | | | | Double | r |
| Multi-line: yes | Axis index | | numMachAxes | | |

| **geoAxisNr** | | | | | |
|---|---|---|---|---|---|
| Number of the geometry axis<br><br>1 - 3 for geometry axes<br>0 for non-geometry axes | | | | | |
| - | | | | UWord | r |
| Multi-line: yes | Axis index | | numMachAxes | | |

| **handwheelAss** | | | | | |
|---|---|---|---|---|---|
| Number of handwheel assigned to axis<br>0 = no handwheel assigned<br>1 to 3 = handwheel number | | | | | |
| - | | 0 | 3 | UWord | r |
| Multi-line: yes | Axis index | | numMachAxes | | |

| **index** | | | | | |
|---|---|---|---|---|---|
| Absolute axis index referring to machine data axis number | | | | | |
| - | | | | UWord | r |
| Multi-line: yes | Axis index | | numMachAxes | | |

| **motEnd** | $AA_MOTEND | | | | |
|---|---|---|---|---|---|
| Current motion end criterion for single-axis interpolation<br>1 = Motion end with exact stop FINE<br>2 = Motion end with exact stop COARSE<br>3 = Motion end with exact stop IPO Stop<br>4 = Block change in braking ramp of axis motion<br>5 = Block change in braking ramp of axis motion with tolerance window with reference to setpoint<br>6 = Block change in braking ramp of axis motion with tolerance window with reference to actual value | | | | | |
| - | 1 | 1 | 6 | UWord | r |
| Multi-line: yes | Axis index | | numMachAxes | | |

| **spec** | | | | | |
|---|---|---|---|---|---|
| Axis specification<br>0 = path axis<br>1 = positioning axis | | | | | |
| - | | | | UWord | r |
| Multi-line: yes | Axis index | | numMachAxes | | |

| **subSpec** | MD 30500: INDEX_AX_ASSIGN_POS_TAB | | | | T1 |
|---|---|---|---|---|---|
| Subspecification, identifies whether an axis is an indexing axis<br>0 = normal axis<br>1 = indexing axis | | | | | |
| - | | | | UWord | r |
| Multi-line: yes | Axis index | | numMachAxes | | |

| **type** | | | | | |
|---|---|---|---|---|---|
| Axis type<br>1 = linear axis<br>2 = rotary axis<br>3 = spindle | | | | | |
| - | | | | UWord | r |
| Multi-line: yes | Axis index | | numMachAxes | | |

© Siemens AG 2004 All Rights Reserved

## 3.5.5 Area C, Mod. SSP: State data: Spindle

**OEM-MMC: Linkitem** /Channel/Spindle/...

All status data that refer to the spindle are combined in the module SSP. The individual variables are defined as arrays where the row index is the number of the spindle (assigned to the current channel). The spindle can be identified by reading the variables "name" or "index" in the same module with the respective row index.
The number of spindles can be read from "numSpindles" in the module Y in the area C.

| **acConstCutS** | $AC_CONSTCUT_S[n] | | | | |
|---|---|---|---|---|---|
| Current constant cutting rate | | | | | |
| m/min, ft/min, user defined | 0 | | | Double | r |
| Multi-line: yes | Spindle index | | numSpindles | | |

| **acSMode** | $AC_SMODE[x] | | | | |
|---|---|---|---|---|---|
| Spindle mode<br>0: No spindle present in channel or spindle is active in another channel or<br>is being used by PLC (FC18) or by synchronized actions.<br>1: Open-loop speed control mode<br>2: Positioning mode<br>3: Synchronous mode<br>4: Axis mode | | | | | |
| - | 1 | 0 | 4 | UWord | r |
| Multi-line: yes | Spindle index | | numSpindles | | |

| **actGearStage** | | | | | |
|---|---|---|---|---|---|
| Actual gear stage of spindle | | | | | |
| - | | | | UWord | r |
| Multi-line: yes | Spindle index | | numSpindles | | |

| **actSpeed** | $AA_S[x] x = SpindleNo | | | | |
|---|---|---|---|---|---|
| Spindle speed actual value | | | | | |
| rev/min, user defined | | | | Double | r |
| Multi-line: yes | Spindle index | | numSpindles | | |

| **channelNo** | | | | | |
|---|---|---|---|---|---|
| Number of channel in which spindle is configured | | | | | |
| - | | | | UWord | r |
| Multi-line: yes | Spindle index | | numSpindles | | |

| **cmdAngPos** | | | | | |
|---|---|---|---|---|---|
| Spindle position (SPOS) | | | | | |
| Degree, user defined | | | | Double | r |
| Multi-line: yes | Spindle index | | numSpindles | | |

© Siemens AG 2004 All Rights Reserved

| **cmdConstCutSpeed** | | | | | |
|---|---|---|---|---|---|
| Constant cutting speed of the master spindle. The requested value for the master spindle differs from SSP:cmdSpeed only if G96 is active | | | | | |
| mm/min, inch/min, user defined | 0.0 | | | Double | r |
| Multi-line: yes | Spindle index | | numSpindles | | |

| **cmdGearStage** | | | | | |
|---|---|---|---|---|---|
| Requested gear stage | | | | | |
| - | | | | UWord | r |
| Multi-line: yes | Spindle index | | numSpindles | | |

| **cmdGwps** | | | | | |
|---|---|---|---|---|---|
| Programmed SUG desired value (SUG is the function "constant perimeter speed of grinding wheel") | | | | | |
| m/s, ft/s | | | | Double | r |
| Multi-line: yes | Spindle index | | numSpindles | | |

| **cmdSpeed** | $P_S[x] x = SpindleNo | | | | |
|---|---|---|---|---|---|
| Spindle speed desired value | | | | | |
| rev/min , m/min | | | | Double | r |
| Multi-line: yes | Spindle index | | numSpindles | | |

| **driveLoad** | | | | | |
|---|---|---|---|---|---|
| Load | | | | | |
| % | | | | Double | r |
| Multi-line: yes | Spindle index | | numSpindles | | |

| **gwpsActive** | {$GWPS} | | | | |
|---|---|---|---|---|---|
| SUG programming active (SUG is the function "constant perimeter speed of grinding wheel)<br>0 = not active<br>1 = active | | | | | |
| - | | | | UWord | r |
| Multi-line: yes | Spindle index | | numSpindles | | |

| **index** | | | | | |
|---|---|---|---|---|---|
| Absolute axis index referred to MD | | | | | |
| - | | | | UWord | r |
| Multi-line: yes | Spindle index | | numSpindles | | |

| **name** | | | | | |
|---|---|---|---|---|---|
| Spindle name<br>Note: If several logical spindles are referred to one physical spindle with active spindle conversion and access is made via area N of module SSP2, then the name of the first suitable logical spindle is output. | | | | | |
| - | | | | String[32] | r |
| Multi-line: yes | Spindle index | | numSpindles | | |

| **namePhys** | | | | | |
|---|---|---|---|---|---|
| Name of assigned physical spindle, identical to "name" variable. | | | | | |
| - | | | | String[32] | r |
| Multi-line: yes | Spindle index | | numSpindles | | |

© Siemens AG 2004 All Rights Reserved

| **opMode** | | | | | |
|---|---|---|---|---|---|
| Spindle mode<br>0 = spindle mode<br>1 = oscillation mode (gear step changeover)<br>2 = positioning mode<br>3 = synchronous mode<br>4 = axis mode | | | | | |
| - | | | | UWord | r |
| Multi-line: yes | Spindle index | | numSpindles | | |

| **pSMode** | $P_SMODE | | | | |
|---|---|---|---|---|---|
| Last programmed spindle mode<br>0: No spindle configured in channel or spindle is active in another channel<br>or in use by the PLC (FC18) or by synchronized actions.<br>1: Speed control mode<br>2: Positioning mode<br>3: Synchronous mode<br>4: Axis mode | | | | | |
| - | | 0 | 4 | UWord | r |
| Multi-line: yes | Spindle index | | numSpindles | | |

| **pSModeS** | $P_SMODE | | | | |
|---|---|---|---|---|---|
| Last programmed spindle mode with block search<br>0: No spindle configured in channel or spindle is active in another channel<br>or in use by the PLC (FC18) or by synchronized actions.<br>1: Speed control mode<br>2: Positioning mode<br>3: Synchronous mode<br>4: Axis mode | | | | | |
| - | | 0 | 4 | UWord | r |
| Multi-line: yes | Spindle index | | numSpindles | | |

| **speedLimit** | | | | | |
|---|---|---|---|---|---|
| Current speed limitation for spindle | | | | | |
| rev/min , m/min | | | | Double | r |
| Multi-line: yes | Spindle index | | numSpindles | | |

| **speedOvr** | | | | | |
|---|---|---|---|---|---|
| Spindle override | | | | | |
| % | | | | Double | r |
| Multi-line: yes | Spindle index | | numSpindles | | |

| **spindleType** | | | | | |
|---|---|---|---|---|---|
| Spindle type<br>0 = master spindle<br>1 = no master spindle | | | | | |
| - | | | | UWord | r |
| Multi-line: yes | Spindle index | | numSpindles | | |

| **status** | | | | | |
|---|---|---|---|---|---|
| Spindle state<br><br><br><br>Bit0 = following spindle<br>Bit1 = leading spindle | | | | | |
| - | | | | UWord | r |
| Multi-line: yes | Spindle index | | numSpindles | | |

© Siemens AG 2004 All Rights Reserved

| **turnState** | $AC_SDIR[x] x = SpindleNo | | | | |
|---|---|---|---|---|---|
| State of spindle rotation<br>value range to be read via BTSS variable<br>0 = clockwise<br>1 = counter-clockwise<br>2 = stop<br>value range to be read via $ variable<br>3 = clockwise<br>4 = counter-clockwise<br>5 = stop | | | | | |
| - | | | | UWord | r |
| Multi-line: yes | Spindle index | | numSpindles | | |

© Siemens AG 2004 All Rights Reserved

## 3.5.6 Area C, Mod. FU: Channel-specific settable frames

**OEM-MMC: Linkitem** /Channel/UserFrame/...

This only applies if $MC_MM_NUM_USER_FRAMES > 0 and $MN_MM_NUM_GLOBAL_USER_FRAMES = 0, otherwise all settable frames have an NCU-global configuration.

The following frame indices are possible:
0 = G500
1 = G54
2 = G55
3 = G56
4 = G57
5 = G505
6 = G506
:
n = G5n
:
99 = G599

The maximum frame index is: $MC_MM_NUM_USER_FRAMES - 1

The PI service SETUFR has to be called in order to activate the settable frames.

| **linShift** | $P_UIFR[x,y,TR] x=FrameNo,y=Axis | | | | PA |
|---|---|---|---|---|---|
| Translation of settable zero offset (the physical unit is defined in basicLengthUnit in module Y in area N). | | | | | |
| mm, inch, user defined | | | | Double | wr |
| Multi-line: yes | Frame index * numMachAxes + axis number | | $MC_MM_NUM_USER_FRAMES * (numGeoAxes + numAuxAxes) | | |

| **linShiftFine** | $P_UIFR[x,y,SI] x=FrameNo,y=Axis | | | | |
|---|---|---|---|---|---|
| Fine offset with frames, expansion of basic frames and settable frames | | | | | |
| mm, inch, user defined | | | | Double | wr |
| Multi-line: yes | Frame index * numMachAxes + axis number | | $MC_MM_NUM_USER_FRAMES * (numGeoAxes + numAuxAxes) | | |

| **mirrorImgActive** | $P_UIFR[x,y,MI] x = FrameNo,y=Axis | | | | PA |
|---|---|---|---|---|---|
| Mirroring enabled in settable zero offset<br>0 = mirroring not active<br>1 = mirroring active | | | | | |
| - | | | | UWord | wr |
| Multi-line: yes | Frame index * numMachAxes + axis number | | $MC_MM_NUM_USER_FRAMES * (numGeoAxes + numAuxAxes) | | |

| **rotation** | $P_UIFR[x,y,RT] x = FrameNo,y=Axis | | | | PA |
|---|---|---|---|---|---|
| Rotation of settable zero offset | | | | | |
| Degree | | | | Double | wr |
| Multi-line: yes | Frame index * numMachAxes + axis number | | $MC_MM_NUM_USER_FRAMES * (numGeoAxes + numAuxAxes) | | |

© Siemens AG 2004 All Rights Reserved

| **scaleFact** | $P_UIFR[x,y,SC] x = FrameNo,y=Axis | | | | PA |
|---|---|---|---|---|---|
| Scaling factor of settable zero offset | | | | | |
| - | | | | Double | wr |
| Multi-line: yes | Frame index * numMachAxes + axis number | | $MC_MM_NUM_USER_FRAMES * (numGeoAxes + numAuxAxes) | | |

© Siemens AG 2004 All Rights Reserved

## 3.5.7 Area C, Mod. SSP2: State data: Spindle

**OEM-MMC: Linkitem** /Channel/LogicalSpindle/...

All state data that refer to a spindle, if a spindle converter (logical spindles) is active

| **acConstCutS** | $AC_CONSTCUT_S[n] | | | | |
|---|---|---|---|---|---|
| Current constant cutting rate | | | | | |
| m/min, ft/min, user defined | 0 | | | Double | r |
| Multi-line: yes | Logical spindle index | | numSpindlesLog | | |

| **acSMode** | $AC_SMODE[x] | | | | |
|---|---|---|---|---|---|
| Spindle mode<br>0: No spindle present in channel or spindle is active in another channel or<br>is being used by PLC (FC18) or by synchronized actions.<br>1: Open-loop speed control mode<br>2: Positioning mode<br>3: Synchronous mode<br>4: Axis mode | | | | | |
| - | 1 | 0 | 4 | UWord | r |
| Multi-line: yes | Logical spindle index | | numSpindlesLog | | |

| **actGearStage** | | | | | |
|---|---|---|---|---|---|
| Actual gear stage of spindle | | | | | |
| - | | | | UWord | r |
| Multi-line: yes | logical spindle index | | numSpindlesLog | | |

| **actSpeed** | | | | | |
|---|---|---|---|---|---|
| Spindle speed actual value | | | | | |
| rev/min, user defined | | | | Double | r |
| Multi-line: yes | logical spindle index | | numSpindlesLog | | |

| **channelNo** | | | | | |
|---|---|---|---|---|---|
| Number of channel in which spindle is configured | | | | | |
| - | | | | UWord | r |
| Multi-line: yes | logical spindle index | | numSpindlesLog | | |

| **cmdAngPos** | | | | | |
|---|---|---|---|---|---|
| Spindle position (SPOS) | | | | | |
| Degree, user defined | | | | Double | r |
| Multi-line: yes | logical spindle index | | numSpindlesLog | | |

| **cmdConstCutSpeed** | | | | | |
|---|---|---|---|---|---|
| Constant cutting speed of the master spindle. The requested value for the master spindle differs from SSP:cmdSpeed only if G96 is active | | | | | |
| mm/min, inch/min, user defined | 0.0 | | | Double | r |
| Multi-line: yes | logical spindle index | | numSpindlesLog | | |

© Siemens AG 2004 All Rights Reserved

| **cmdGearStage** | | | | | |
|---|---|---|---|---|---|
| Requested gear stage | | | | | |
| - | | | | UWord | r |
| Multi-line: yes | logical spindle index | | numSpindlesLog | | |

| **cmdGwps** | | | | | |
|---|---|---|---|---|---|
| Programmed SUG desired value (SUG is the function "constant perimeter speed of grinding wheel") | | | | | |
| m/s, ft/s | | | | Double | r |
| Multi-line: yes | logical spindle index | | numSpindlesLog | | |

| **cmdSpeed** | | | | | |
|---|---|---|---|---|---|
| Spindle speed desired value | | | | | |
| rev/min , m/min | | | | Double | r |
| Multi-line: yes | logical spindle index | | numSpindlesLog | | |

| **driveLoad** | | | | | |
|---|---|---|---|---|---|
| Load | | | | | |
| % | | | | Double | r |
| Multi-line: yes | logical spindle index | | numSpindlesLog | | |

| **gwpsActive** | {$GWPS} | | | | |
|---|---|---|---|---|---|
| SUG programming active (SUG is the function "constant perimeter speed of grinding wheel)<br>0 = not active<br>1 = active | | | | | |
| - | | | | UWord | r |
| Multi-line: yes | logical spindle index | | numSpindlesLog | | |

| **index** | | | | | |
|---|---|---|---|---|---|
| Absolute axis index referred to MD | | | | | |
| - | | | | UWord | r |
| Multi-line: yes | logical spindle index | | numSpindlesLog | | |

| **name** | | | | | |
|---|---|---|---|---|---|
| Spindle name<br>Note: If several logical spindles are referred to one physical spindle with active spindle conversion and access is made via area N of module SSP2, then the name of the first suitable logical spindle is output. | | | | | |
| - | | | | String[32] | r |
| Multi-line: yes | logical spindle index | | numSpindlesLog | | |

| **namePhys** | | | | | |
|---|---|---|---|---|---|
| Name of assigned physical spindle, identical to "name" variable. | | | | | |
| - | | | | String[32] | r |
| Multi-line: yes | logical spindle index | | numSpindlesLog | | |

| **opMode** | | | | | |
|---|---|---|---|---|---|
| Spindle mode<br>0 = spindle mode<br>1 = oscillation mode (gear step changeover)<br>2 = positioning mode<br>3 = synchronous mode<br>4 = axis mode | | | | | |
| - | | | | UWord | r |
| Multi-line: yes | logical spindle index | | numSpindlesLog | | |

© Siemens AG 2004 All Rights Reserved

| **pSMode** | $P_SMODE | | | | |
|---|---|---|---|---|---|
| Last programmed spindle mode<br>0: No spindle configured in channel or spindle is active in another channel<br>or in use by the PLC (FC18) or by synchronized actions.<br>1: Speed control mode<br>2: Positioning mode<br>3: Synchronous mode<br>4: Axis mode | | | | | |
| - | | 0 | 4 | UWord | r |
| Multi-line: yes | Logical spindle index | | numSpindlesLog | | |

| **pSModeS** | $P_SMODE | | | | |
|---|---|---|---|---|---|
| Last programmed spindle mode with block search<br>0: No spindle configured in channel or spindle is active in another channel<br>or in use by the PLC (FC18) or by synchronized actions.<br>1: Speed control mode<br>2: Positioning mode<br>3: Synchronous mode<br>4: Axis mode | | | | | |
| - | | 0 | 4 | UWord | r |
| Multi-line: yes | Logical spindle index | | numSpindlesLog | | |

| **speedLimit** | | | | | |
|---|---|---|---|---|---|
| Current speed limitation for spindle | | | | | |
| rev/min , m/min | | | | Double | r |
| Multi-line: yes | logical spindle index | | numSpindlesLog | | |

| **speedOvr** | | | | | |
|---|---|---|---|---|---|
| Spindle override | | | | | |
| % | | | | Double | r |
| Multi-line: yes | logical spindle index | | numSpindlesLog | | |

| **spindleType** | | | | | |
|---|---|---|---|---|---|
| Spindle type<br>0 = master spindle<br>1 = no master spindle | | | | | |
| - | | | | UWord | r |
| Multi-line: yes | logical spindle index | | numSpindlesLog | | |

| **status** | | | | | |
|---|---|---|---|---|---|
| Spindle state<br><br><br><br>Bit0 = following spindle<br>Bit1 = leading spindle | | | | | |
| - | | | | UWord | r |
| Multi-line: yes | logical spindle index | | numSpindlesLog | | |

© Siemens AG 2004 All Rights Reserved

| **turnState** | | | | | |
|---|---|---|---|---|---|
| State of spindle rotation<br>value range to be read via BTSS variable<br>0 = clockwise<br>1 = counter-clockwise<br>2 = stop<br>value range to be read via $ variable<br>3 = clockwise<br>4 = counter-clockwise<br>5 = stop | | | | | |
| - | | | | UWord | r |
| Multi-line: yes | logical spindle index | | numSpindlesLog | | |

© Siemens AG 2004 All Rights Reserved

## 3.5.8 Area C, Mod. FA: Active channel-specific frames

**OEM-MMC: Linkitem** /Channel/ActualFrame/...

The following frame indices are available:

0: ACTFRAME = currently resulting work offset
1: IFRAME = current settable work offset
2: PFRAME = current programmable work offset
3: EXTFRAME = current external work offset
4: TOTFRAME = current total work offset = sum of ACTFRAME and EXTFRAME
5: ACTBFRAME = current total base frame
6: SETFRAME = current 1st system frame (set actual value, scratching)
7: EXTSFRAME = current 2nd system frame (set actual value, scratching)
8: PARTFRAME = current 3rd system frame (TCARR and PAROT with orientable toolholder)
9: TOOLFRAME = current 4th system frame (TOROT and TOFRAME)
10: MEASFRAME = result frame for workpiece and tool measurement
11: WPFRAME = current 5th system frame (workpiece reference points) as of SW 6.3
12: CYCFRAME = current 6th system frame (cycles) as of SW 6.3

The maximum frame index is 12.

| **linShift** | $P_PFRAME[x,TR] / $P_ACTFRAME / $P_IFRAME | | | | PA |
|---|---|---|---|---|---|
| Translation of an active zero offset (the physical unit is defined in basicLengthUnit in module Y in area N). | | | | | |
| mm, inch, user defined | | | | Double | r |
| Multi-line: yes | Frame index * numMachAxes + axis number | | 11 * numMachAxes | | |

| **mirrorImgActive** | $P_PFRAME[x,MI] / $P_ACTFRAME / $P_IFRAME | | | | PA |
|---|---|---|---|---|---|
| Mirroring enabled in an active zero offset<br>0 = mirroring not active<br>1 = mirroring active | | | | | |
| - | | | | UWord | r |
| Multi-line: yes | Frame index * numMachAxes + axis number | | 11 * numMachAxes | | |

| **rotation** | $P_PFRAME[x,RT] / $P_ACTFRAME / $P_IFRAME | | | | PA |
|---|---|---|---|---|---|
| Rotation of an active zero offset | | | | | |
| Degree | | | | Double | r |
| Multi-line: yes | Frame index * numMachAxes + axis number | | 11 * numMachAxes | | |

| **scaleFact** | $P_PFRAME[x,SC] / $P_ACTFRAME / $P_IFRAME | | | | PA |
|---|---|---|---|---|---|
| Scaling factor of an active zero offset | | | | | |
| - | | | | Double | r |
| Multi-line: yes | Frameindex * numMachAxes + axis number | | 11 * numMachAxes | | |

© Siemens AG 2004 All Rights Reserved

## 3.5.9 Area C, Mod. FE: Channel-specific external frame

**OEM-MMC: Linkitem** /Channel/ExternFrame/...

There is exactly one external frame defined by the PLC.

The maximum frame index is: 0

| **linShift** | $AA_ETRANS[x] x = FrameNo | | | | PA |
|---|---|---|---|---|---|
| Translation of external zero offset (the physical unit is defined in basicLengthUnit in module Y in area N). | | | | | |
| mm, inch, user defined | | | | Double | wr |
| Multi-line: yes | Geo axis number | | numGeoAxes | | |

© Siemens AG 2004 All Rights Reserved

# 3.6 State data of drives

## 3.6.1 Area H, Mod. S: Drive-specific state data (MSD)

**OEM-MMC: Linkitem** /DriveHsa/State/...

During NC operation different internal states occur and system-specific data may change during operation. To distinguish those from system variables, they are classified as state data.

A distinction is made between:
- NCK-specific state data
- Mode-group-specific state data
- Channel-specific state data
- Drive-specific state data (FDD)
- Drive-specific state data (MSD)

Attention: The HS module cannot be addressed with MMC100/EBF/OP030

| **actualCurrent** | MD 1708: ACTUAL_CURRENT | | | | IAD |
|---|---|---|---|---|---|
| Actual value of the smoothened current (referring to the maximum current of the drive)<br>CAUTION: The variable cannot be configured by MMC100. | | | | | |
| % | | -100000,0 | 10000,0 | Float | r |
| Multi-line: no | | | | | |

| **actualSpeed** | MD 1701: ACTUAL_SPEED | | | | IAD |
|---|---|---|---|---|---|
| Actual value of rotary speed (motor)<br>CAUTION: The variable cannot be configured by MMC100. | | | | | |
| rev/min , m/min | | -100000,0 | 100000,0 | Float | r |
| Multi-line: no | | | | | |

| **cl1PoImage** | MD 1731: CL1_PO_IMAGE | | | | IAD |
|---|---|---|---|---|---|
| Image of the ZK1PO register. The format is hexadecimal<br>Attention: The variable cannot be configured by the MMC 100 | | | | | |
| - | | 0x0 | 0x7FFF | UWord | r |
| Multi-line: no | | | | | |

| **cl1ResImage** | MD 1732: CL1_RES_IMAGE | | | | IAD |
|---|---|---|---|---|---|
| Image of the ZK1RES register. The format is hexadecimal<br>Attention: The variable cannot be configured by the MMC 100! | | | | | |
| - | | 0x0 | 0x7FFF | UWord | r |
| Multi-line: no | | | | | |

| **crcErrorCount** | MD 1720: CRC_DIAGNOSIS | | | | IAD |
|---|---|---|---|---|---|
| CRC-parameter for diagnosis. Number is displayed in hexadecimal format.<br>Attention: This variable cannot be configured by the MMC100! | | | | | |
| - | | 0x0 | 0x7FFF | UWord | r |
| Multi-line: no | | | | | |

© Siemens AG 2004 All Rights Reserved

| **desiredSpeed** | MD 1706: DESIRED_SPEED | | | | IAD |
|---|---|---|---|---|---|
| Desired value of rotary speed. With linear motors: desired velocity<br>Attention: The variable cannot be configured by the MMC100! | | | | | |
| rev/min , m/min | | -100000,0 | 100000,0 | Float | r |
| Multi-line: no | | | | | |

| **encTypeDirect** | MD 1791: ENC_TYPE_DIRECT | | | | IAD |
|---|---|---|---|---|---|
| Direct mounted encoder used for reading in the actual values<br>Attention: This variable cannot be configured by MMC100! | | | | | |
| - | | 0 | 32767 | UWord | r |
| Multi-line: no | | | | | |

| **encTypeMotor** | MD 1790: ENC_TYPE_MPTOR | | | | IAD |
|---|---|---|---|---|---|
| Motor mounted ( indirect ) encoder used for reading in the actual values.<br>Attention: This variable cannot be configured by MMC100! | | | | | |
| - | | 0 | 32767 | UWord | r |
| Multi-line: no | | | | | |

| **firmwareDate** | MD 1798: FIRMWARE_DATE | | | | IAD |
|---|---|---|---|---|---|
| Firmware date<br>Attention: This variable cannot be configured by the MMC100! | | | | | |
| - | | 0 | 32767 | UWord | r |
| Multi-line: no | | | | | |

| **firmwareVersion** | MD 1799: FIRMWARE_VERSION | | | | IAD |
|---|---|---|---|---|---|
| Firmware version<br>Attention: This variable cannot be configured by the MMC100! | | | | | |
| - | | 0 | 32767 | UWord | r |
| Multi-line: no | | | | | |

| **linkVoltage** | MD 1701: LINK_VOLTAGE | | | | IAD |
|---|---|---|---|---|---|
| Link voltage<br>Attention: This variable cannot be configured by the MMC100!<br>0 to 800 | | | | | |
| V | | 0 | 32767 | UWord | r |
| Multi-line: no | | | | | |

| **load** | MD 1722: LOAD | | | | IAD |
|---|---|---|---|---|---|
| Load. Display is in hexadecimal format<br>Attention: Variable cannot be configured by the MMC100! | | | | | |
| % | | -100000,0 | 100000,0 | Float | r |
| Multi-line: no | | | | | |

| **motorTemperature** | MD 1702: MOTOR_TEMPERATURE | | | | IAD |
|---|---|---|---|---|---|
| Motor temperature<br>Attention: The variable cannot be configured by the MMC100! | | | | | |
| C | | 0 | 32767 | UWord | r |
| Multi-line: no | | | | | |

© Siemens AG 2004 All Rights Reserved

| **operatingMode** | | | | | IAD |
|---|---|---|---|---|---|
| Operating mode<br>Attention: Variable cannot be configured By the MMC100!<br>Bit0 = VSA<br>Bit4 = HSA<br>Bit8 = AM control<br>Bit9 = AM closed loop control<br>Bit12 = U/f-operation mode<br>bits exclude one another (except bit 12) | | | | | |
| - | | | | UWord | r |
| Multi-line: no | | | | | |

| **pblVersion** | MD 1797: PBL_VERSION | | | | IAD |
|---|---|---|---|---|---|
| Data version<br>Attention: The variable cannot be configured by the MMC100! | | | | | |
| - | | 0 | 32767 | UWord | r |
| Multi-line: no | | | | | |

| **safeStopFDiagnosis** | MD 1395 : SAFE_STOP_F_DIAGNOSIS | | | | |
|---|---|---|---|---|---|
| Drive error code for alarm 300911 | | | | | |
| - | 0 | | | UWord | r |
| Multi-line: no | | | | | |

| **terminalState** | MD 1700: TERMINAL_STATE | | | | IAD |
|---|---|---|---|---|---|
| State of the binary inputs (displayed in hexadecimal format)<br>Attention: This variable cannot be configured by the MMC100! | | | | | |
| - | | 0x0 | 0x7FFF | UWord | r |
| Multi-line: no | | | | | |

© Siemens AG 2004 All Rights Reserved

## 3.6.2 Area V, Mod. S: Drive-specific status data (FDD)

**OEM-MMC: Linkitem** /DriveVsa/State/...

During NC operation different internal states occur and system-specific data may change during operation. To distinguish those from system variables, they are classified as state data.

A distinction is made between:
- NCK-specific state data
- Mode-group-specific state data
- Channel-specific state data
- Drive-specific state data (FDD)
- Drive-specific state data (MSD)

No cyclic service may be set up on variables in this module. Only single variable access is permitted.

| **actualCurrent** | MD 1708: ACTUAL_CURRENT | | | | IAD |
|---|---|---|---|---|---|
| Actual value of the smoothened current (referring to the maximum current of the drive) | | | | | |
| % | | -10000,0 | 10000,0 | Float | r |
| Multi-line: no | | | | | |

| **actualSpeed** | MD 1707: ACTUAL_SPEED | | | | IAD |
|---|---|---|---|---|---|
| Actual value of the rotary speed, actual velocity for linear drive (motor) | | | | | |
| rev/min , m/min | | -100000,0 | 100000,0 | Float | r |
| Multi-line: no | | | | | |

| **cl1PoImage** | MD 1731: CL1_PO_IMAGE | | | | IAD |
|---|---|---|---|---|---|
| ZK1PO register image. Hexadecimal numerical representation | | | | | |
| - | | 0x0 | 0x7FFF | UWord | r |
| Multi-line: no | | | | | |

| **cl1ResImage** | MD 1732: CL1_RES_IMAGE | | | | IAD |
|---|---|---|---|---|---|
| ZK1RES register image. Hexadecimal numerical representation | | | | | |
| - | | 0x0 | 0x7FFF | UWord | r |
| Multi-line: no | | | | | |

| **crcErrorCount** | MD 1720: CRC_DIAGNOSIS | | | | IAD |
|---|---|---|---|---|---|
| CRC diagnostic parameter. Hexadecimal numerical representation | | | | | |
| - | | 0x0 | 0x7FFF | UWord | r |
| Multi-line: no | | | | | |

| **desiredSpeed** | MD 1706: DESIRED_SPEED | | | | IAD |
|---|---|---|---|---|---|
| Speed setpoint | | | | | |
| rev/min , m/min | | -100000,0 | 100000,0 | Float | r |
| Multi-line: no | | | | | |

| **encTypeDirect** | MD 1791: ENC_TYPE_DIRECT | | | | IAD |
|---|---|---|---|---|---|
| Measuring circuit type of direct measuring system | | | | | |
| - | | 0 | 32767 | UWord | r |
| Multi-line: no | | | | | |

© Siemens AG 2004 All Rights Reserved

| **encTypeMotor** | MD 1790: ENC_TYPE_MOTOR | | | | IAD |
|---|---|---|---|---|---|
| Measuring circuit type of indirect measuring system | | | | | |
| - | | 0 | 32767 | UWord | r |
| Multi-line: no | | | | | |

| **firmwareDate** | MD 1798: FIRMWARE_DATE | | | | IAD |
|---|---|---|---|---|---|
| Firmware date | | | | | |
| - | | 0 | 32767 | UWord | r |
| Multi-line: no | | | | | |

| **firmwareVersion** | MD 1799: FIRMWARE_VERSION | | | | IAD |
|---|---|---|---|---|---|
| Firmware version | | | | | |
| - | | 0 | 32767 | UWord | r |
| Multi-line: no | | | | | |

| **linkVoltage** | MD 1701: LINK_VOLTAGE | | | | IAD |
|---|---|---|---|---|---|
| DC-link voltage | | | | | |
| V | | 0 | 32767 | UWord | r |
| Multi-line: no | | | | | |

| **load** | MD 1722: LOAD | | | | IAD |
|---|---|---|---|---|---|
| Utilization: Represented in hexadecimal format | | | | | |
| % | | -100000,0 | 100000,0 | Float | r |
| Multi-line: no | | | | | |

| **motorTemperature** | MD 1702: MOTOR_TEMPERATURE | | | | IAD |
|---|---|---|---|---|---|
| Motor temperature | | | | | |
| C | | 0 | 32767 | UWord | r |
| Multi-line: no | | | | | |

| **operatingMode** | | | | | IAD |
|---|---|---|---|---|---|
| Operating mode<br>Bit0 = FDD<br>Bit4 = MSD<br>Bit8 = Open-loop AM control<br>Bit9 = Closed-loop AM control<br>Bit12 = V/Hz mode | | | | | |
| - | | | | UWord | r |
| Multi-line: no | | | | | |

| **pblVersion** | MD 1797: PBL_VERSION | | | | IAD |
|---|---|---|---|---|---|
| Data version | | | | | |
| - | | 0 | 32767 | UWord | r |
| Multi-line: no | | | | | |

| **safeStopFDiagnosis** | MD 1395 : SAFE_STOP_F_DIAGNOSIS | | | | |
|---|---|---|---|---|---|
| Drive error code for alarm 300911 | | | | | |
| - | 0 | | | UWord | r |
| Multi-line: no | | | | | |

| **terminalState** | MD 1700: TERMINAL_STATE | | | | IAD |
|---|---|---|---|---|---|
| State of the binary inputs (in hexadecimal format) | | | | | |
| - | | 0x0 | 0x7FFF | UWord | r |
| Multi-line: yes | 1 | | | | |

© Siemens AG 2004 All Rights Reserved

# 3.7 Tool and magazine data

## 3.7.1 Area T, Mod. TO: Tool edge data: Offset data

**OEM-MMC: Linkitem** /Tool/Compensation/...

The data module TO is organized as a two-dimensional variable array.
The module contains the tool edge offset data for all tools. Each element can be addressed via a column and row index:
The column index is the tool number (T-number), i.e. the offset data for all cutting edges of a tool are located in one column. The assignment of a tool to a T-number is given in the module "Tool directory" (TV) in the related area T. If a non-existent tool number is entered for the column index the request is negatively acknowledged.
The number of rows is derived from the number of parameters per tool edge and the number of edges on a tool:

maxZeilenindex = numCuttEdgeParams * /T/TV/numCuttEdges (T-number)

The number of parameters per tool edge "numCuttEdgeParams" is given in module Y in area N. The number of cutting edges "/T/TV/numCuttEdges" is always tool-specific and is given in the module TV in associated area T.

If necessary, several rows can be addressed, so that in one request, for example, all tool edge offset data of a single tool can be read. The offset values of the tool edges are all of the same data type and have the same physical unit.

© Siemens AG 2004 All Rights Reserved

| **cuttEdgeParam** | $TC_DPCEx[y,z] x = ParamNo y = ToolNo z = EdgeNo | | | | |
|---|---|---|---|---|---|
| Offset value parameter and edge list with D numbers for a tool<br>1st section: Offset value parameter for a tool edge:<br>The meaning of each parameter depends on the tool type. At present 25 parameters are reserved for each tool edge (however only some of them are used). To be flexible for future extensions use the variable 'numCuttEdgeParams' rather than the fixed number 25 for the number of parameters.<br>A detailed description of tool parameters can be found in the documentation 'Tool Offset (W1)', Section "Tool edge".<br>The following list is a summary of the tool edge parameters:<br>Parameter 1: Geometry -- tool type ($TC_DP1)<br>Parameter 2: Geometry -- tool point direction ($TC_DP2)<br>Parameter 3: Geometry -- length 1 ($TC_DP3)<br>Parameter 4: Geometry -- length 2 ($TC_DP4)<br>Parameter 5: Geometry -- length 3 ($TC_DP5)<br>Parameter 6: Geometry -- radius ($TC_DP6)<br>Parameter 7: Geometry -- corner radius (tool type 700; slotting saw) ($TC_DP7)<br>Parameter 8: Geometry -- length 4 (tool type 700; slotting saw) ($TC_DP8)<br>Parameter 9: Geometry -- length 5 ($TC_DP9)<br>Parameter 10: Geometry -- angle 1 ($TC_DP10)<br>Parameter 11: Geometry -- angle 2 for tapered milling tools ($TC_DP11)<br>Parameter 12: Wear -- length 1 ($TC_DP12)<br>Parameter 13: Wear -- length 2 ($TC_DP13)<br>Parameter 14: Wear -- length 3 ($TC_DP14)<br>Parameter 15: Wear -- radius ($TC_DP15)<br>Parameter 16: Wear -- slot width b / rounding radius ($TC_DP16)<br>Parameter 17: Wear -- proj. length k ($TC_DP17)<br>Parameter 18: Wear -- length 5 ($TC_DP18)<br>Parameter 19: Wear -- angle 1 ($TC_DP19)<br>Parameter 20: Wear -- angle 2 for tapered milling tools ($TC_DP20)<br>Parameter 21: Adapter -- length 1 ($TC_DP21)<br>Parameter 22: Adapter -- length 2 ($TC_DP22)<br>Parameter 23: Adapter -- length 3 ($TC_DP23)<br>Parameter 24: Relief angle ($TC_DP24)<br>Parameter 25: Manual Turn: Cutting rate ($TC_DP25)<br>Shopmill: Bit-coded value for different states of tools of type 1xx and 2xx ($TC_DP25)<br>All parameters up to 25, that are not listed, are reserved.<br><br>2nd section: edgeDNo (SW 5.1 and later), associated optional D numbers of edges:<br>-1: No edge<br>1 .. maxDNo: Edge exists, associated D number, only when "any D numbers" function is activated (maxnumCuttEdges_Tool < maxCuttingEdgeNo)<br>Edge No.:1 to maxnumCuttEdges_Tool, when edge exists, but when "Assignment of any D numbers" function is not activated on the NC.<br>0: No D number assigned/assignment cancelled. (In this case, OPI deviates from NCK variable $TC_DPCE....<br>$TC_DPCE = edge number, D = offset number D.<br>If the D number of an edge (variable of module TO) has been set to invalid, the value $TC_DPCE remains unaffected.<br>The edge number specified in the description of the row index matches parameter $TC_DPCE.<br>The variable D No. defined in the module matches the second index in the offset-specific parameters of type $TC_DPx[T,D],... and others; with x=1,....25.).<br><br>Important: This variable is called "edgeData" in the MMC102.<br>The value for the tool type is stored internally as an integer. | | | | | |
| - | 0 | | | Double | wr |
| Multi-line: yes | For edge offset value parameters:<br>(edgeNo - 1) * numCuttEdgeParams + ParameterNo<br>For D numbers:<br>((numCuttEdgeParams * maxnumCuttEdges_Tool) + EdgeNo) | | (numCuttEdgeParams + 1) * maxnumCuttEdges_Tool | | |

© Siemens AG 2004 All Rights Reserved

| **edgeData** | $TC_DPx[y,z] x = ParamNo y = ToolNo z = EdgeNo | | | | |
|---|---|---|---|---|---|
| Offset value parameter and edge list with D numbers for a tool<br>1st section: Offset value parameter for a tool edge:<br>The meaning of each parameter depends on the tool type. At present 25 parameters are reserved for each tool edge (however only some of them are used). To be flexible for future extensions use the variable 'numCuttEdgeParams' rather than the fixed number 25 for the number of parameters.<br>A detailed description of tool parameters can be found in the documentation Tool Offset (W1), Section "Tool edge".<br>The following list is a summary of the tool edge parameters:<br>Parameter 1: Geometry -- tool type ($TC_DP1)<br>Parameter 2: Geometry -- tool point direction ($TC_DP2)<br>Parameter 3: Geometry -- length 1 ($TC_DP3)<br>Parameter 4: Geometry -- length 2 ($TC_DP4)<br>Parameter 5: Geometry -- length 3 ($TC_DP5)<br>Parameter 6: Geometry -- radius ($TC_DP6)<br>Parameter 7: Geometry -- corner radius (tool type 700; slotting saw) ($TC_DP7)<br>Parameter 8: Geometry -- length 4 (tool type 700; slotting saw) ($TC_DP8)<br>Parameter 9: Geometry -- length 5 ($TC_DP9)<br>Parameter 10: Geometry -- angle 1 ($TC_DP10)<br>Parameter 11: Geometry -- angle 2 for tapered milling tools ($TC_DP11)<br>Parameter 12: Wear -- length 1 ($TC_DP12)<br>Parameter 13: Wear -- length 2 ($TC_DP13)<br>Parameter 14: Wear -- length 3 ($TC_DP14)<br>Parameter 15: Wear -- radius ($TC_DP15)<br>Parameter 16: Wear -- slot width b / rounding radius ($TC_DP16)<br>Parameter 17: Wear -- proj. length k ($TC_DP17)<br>Parameter 18: Wear -- length 5 ($TC_DP18)<br>Parameter 19: Wear -- angle 1 ($TC_DP19)<br>Parameter 20: Wear -- angle 2 for tapered milling tools ($TC_DP20)<br>Parameter 21: Adapter -- length 1 ($TC_DP21)<br>Parameter 22: Adapter -- length 2 ($TC_DP22)<br>Parameter 23: Adapter -- length 3 ($TC_DP23)<br>Parameter 24: Relief angle ($TC_DP24)<br>Parameter 25: Manual Turn: Cutting rate ($TC_DP25)<br>Shopmill: Bit-coded value for different states of tools of type 1xx and 2xx ($TC_DP25)<br>All parameters up to 25, that are not listed, are reserved.<br><br>2nd section: edgeDNo (SW 5.1 and later), associated optional D numbers of edges:<br>-1: No edge<br>1 .. maxDNo: Edge exists, associated D number, only when "any D numbers" function is activated (maxnumCuttEdges_Tool < maxCuttingEdgeNo)<br>Edge No.:1 to maxnumCuttEdges_Tool, when edge exists, but when "Assignment of any D numbers" function is not activated on the NC.<br>0: No D number assigned/assignment cancelled. (In this case, OPI deviates from NCK variable $TC_DPCE.... $TC_DPCE... contains a unique number > 32000 when a D number is not assigned.)<br>If the D number of an edge (variable of module TO) has been set to invalid, the value $TC_DPCE remains unaffected.<br>The edge number specified in the description of the row index matches parameter $TC_DPCE.<br>The variable D No. defined in the module matches the second index in the offset-specific parameters of type $TC_DPx[T,D],... and others; with x=1,....25.).<br><br>Important: This variable is called "cuttEdgeParam" in the non-Windows-MMC and the PLC.<br><br>The value for the tool type is stored internally as an integer. | | | | | |
| mm, inch, user defined | 0 | | | Double | wr |
| Multi-line: yes | For edge offset value parameters:<br>(edgeNo - 1) * numCuttEdgeParams + ParameterNo<br>For D numbers:<br>((numCuttEdgeParams * maxnumCuttEdges_Tool) + EdgeNo) | | (numCuttEdgeParams + 1) * maxnumCuttEdges_Tool | | |

© Siemens AG 2004 All Rights Reserved

## 3.7.2 Area T, Mod. TD: Tool data: General data

**OEM-MMC: Linkitem** /Tool/Data/...

In addition to the tool offset data other tool characteristics are stored for managing the tools. The module TD contains the general data of the tools. The tool characteristics can be addressed via individual multiple-line variables. The variable line index corresponds to the T-number. If non-existent T-numbers are accessed, the request is acknowledged negatively. The module Tool directory (TV) in the associated T area shows which T-numbers are valid.

A new entry is provided for the tool monitoring mode:
Monitoring modes in toolMon:
0: No tool monitoring
1: Tool life monitoring
2: Workpiece number monitoring
4: Monitoring of edge wear parameters using wear limit (SW 5.1 and later)
8: Monitoring of total offset parameters (fine, $TC_SCP..., not setup offsets $TC_ECP...) using wear limit (SW 5.1 and later)

| **adaptNo** | | | | | |
|---|---|---|---|---|---|
| Number of adapter defined by system parameter $TC_ADPx which is supporting the tool<br>>0: adapter number<br>0: no adapter assigned | | | | | |
| - | 0 | 0 | numMagPlaces Max | UWord | r |
| Multi-line: yes | T number | | max. T-Nummer | | |

| **duploNo** | $TC_TP1 | | | | FBW |
|---|---|---|---|---|---|
| Duplo number (number of replacement tool)<br>In the tool management each tool is explicitly defined both by its identifier and its duplo number. This means that a T-area can only contain tool identifiers with different duplo numbers. | | | | | |
| - | T-Nummer | | | UWord | r |
| Multi-line: yes | Tool number T | | 32000 | | |

| **numCuttEdges** | $P_TOOLND[x] x = ToolNo | | | | |
|---|---|---|---|---|---|
| Number of cutting edges of a tool | | | | | |
| - | | | | UWord | r |
| Multi-line: no | | | 1 | | |

| **toolIdent** | $TC_TP2 | | | | FBW |
|---|---|---|---|---|---|
| Tool identifier | | | | | |
| - | "<T-Nummer>" | | | String[32] | r |
| Multi-line: yes | Tool number T | | 32000 | | |

| **toolInfo** | $TC_TP11 | | | | FBW |
|---|---|---|---|---|---|
| Tool information for MMC<br>Not currently assigned | | | | | |
| - | 0 | | | UWord | wr |
| Multi-line: yes | Tool number T | | 32000 | | |

© Siemens AG 2004 All Rights Reserved

| **toolInMag** | $A_TOOLMN[x] x = ToolNo T | | | | |
|---|---|---|---|---|---|
| Current magazine in which the tool is located | | | | | |
| - | | | | UWord | r |
| Multi-line: yes | Tool number T | | 32000 | | |

| **toolInPlace** | $A_TOOLMLN[x] x = ToolNo T | | | | |
|---|---|---|---|---|---|
| Current location in which the tool is located | | | | | |
| - | | | | UWord | r |
| Multi-line: yes | Tool number T | | 32000 | | |

| **toolMon** | $TC_TP9 | | | | FBW |
|---|---|---|---|---|---|
| Type of tool monitoring<br>0: no tool monitoring<br>1: tool life monitoring<br>2: no. of workpieces monitoring<br>4: monitoring of edge wear parameters using wear limit (SW 5.1 and later)<br>8: monitoring of total offset parameters using wear limit (SW 5.1 and later) | | | | | |
| - | 0 | | | UWord | wr |
| Multi-line: yes | TNo | | 32000 | | |

| **toolMyMag** | $A_MYMN | | | | |
|---|---|---|---|---|---|
| Owner magazine of the tool magazine from which the tool was loaded<br>0 = the tool is not loaded. If toolInMag is >0 at the same time,<br>the T number will specify a manual tool, or TMMG is not active. | | | | | |
| - | - | 0 | max. Nummer eines def. Magazins | UWord | r |
| Multi-line: yes | T number | | max. T-Nummer | | |

| **toolMyPlace** | $A_MYMLN | | | | |
|---|---|---|---|---|---|
| Owner magazine of the tool - Magazine location from which the tool was loaded<br>0 = the tool is not loaded. If toolInPlace is >0 at the same time,<br>the T number will specify a manual tool, a valid magazine location number or TMMG is not active. | | | | | |
| - | - | | max. Nummer def. Magazinplatz | UWord | r |
| Multi-line: yes | T number | | max. T-Nummer | | |

| **toolplace_spec** | $TC_TP7 | | | | FBW |
|---|---|---|---|---|---|
| Magazine location type of tool | | | | | |
| - | 9999 | | | UWord | wr |
| Multi-line: yes | Tool number T | | 32000 | | |

| **toolSearch** | $TC_TP10 | | | | FBW |
|---|---|---|---|---|---|
| Type of tool search for replacement tools<br>0: no strategy<br>1: next duplo no.<br>2: shortest path | | | | | |
| - | 0 | | | UWord | wr |
| Multi-line: yes | Tool number T | | 32000 | | |

| **toolsize_down** | $TC_TP6 | | | | FBW |
|---|---|---|---|---|---|
| Size downwards in half locations | | | | | |
| - | 1 | | | UWord | wr |
| Multi-line: yes | Tool number T | | 32000 | | |

© Siemens AG 2004 All Rights Reserved

| **toolsize_left** | $TC_TP3 | | | | FBW |
|---|---|---|---|---|---|
| Size to the left in half locations | | | | | |
| - | 1 | | | UWord | wr |
| Multi-line: yes | Tool number T | | 32000 | | |

| **toolsize_right** | $TC_TP4 | | | | FBW |
|---|---|---|---|---|---|
| Size to the right in half locations | | | | | |
| - | 1 | | | UWord | wr |
| Multi-line: yes | Tool number t | | 32000 | | |

| **toolsize_upper** | $TC_TP5 | | | | FBW |
|---|---|---|---|---|---|
| Size upwards in half locations | | | | | |
| - | 1 | | | UWord | wr |
| Multi-line: yes | Tool number T | | 32000 | | |

| **toolState** | $TC_TP8 | | | | FBW |
|---|---|---|---|---|---|
| Tool state<br>0: not enabled<br>1: active tool (A)<br>2: enabled (F)<br>4: disabled (G)<br>8: measured (M)<br>16: prewarning limit reached (V)<br>32: tool being changed (W)<br>64: fixed location coded (P)<br>128: tool was in use (E) | | | | | |
| - | 0 | | | UWord | wr |
| Multi-line: yes | Tool number T | | 32000 | | |

© Siemens AG 2004 All Rights Reserved

## 3.7.3 Area T, Mod. TS: Tool edge data: Monitoring data

**OEM-MMC: Linkitem** /Tool/Supervision/...

The module TS is organized as a two-dimensional variable array. The module contains the tool edge monitoring data for all tools. Each element can be addressed via a column and line index:
The column index is the tool number (T-number), i.e. one column contains the monitoring data for all tool edges of a tool. The assignment of a tool to a T-number is given in the module Tool directory (TV) in the associated area T. If a non-existent tool number is specified for the column index, the request is acknowledged negatively.
The number of lines is derived from the number of parameters per tool edge and from the number of tool edges of a tool:

maxZeilenanzahl = numCuttEdgeParams_ts * /T/TV/numCuttEdges (T-number)

The number of parameters per tool edge "numCuttEdgeParams_ts" is given in the module Y in area N. The number of tool edges "/T/TV/numCuttEdges" is always tool specific and can be found in the module TV in associated area T.

If necessary, several lines can be addressed, so that in one request, for example, all tool edge monitoring data of a single tool can be read. The monitoring data of the tool edges are all of the same data type and have the same physical unit.

New tool monitoring modes "Monitoring of wear values" and "Monitoring of total offsets":
3 new parameters are provided for these modes:
P7 = Wear prewarning limit (SW 5.1 and later) ($TC_MOP6)
P8 = Remaining wear (actual value) (SW 5.1 and later) ($TC_MOP5)
P9 = Wear setpoint (SW 5.1 and later) ($TC_MOP15)

© Siemens AG 2004 All Rights Reserved

| **data** | $TC_MOP1[x,y] ...$TC_MOP15[x,y] x=ToolNo y=EdgeNo | | | | |
|---|---|---|---|---|---|
| Monitoring data per tool edge<br>Important: This is a two-dimensional variable.<br>9 parameters are available for each tool edge.<br>The parameters have the following meaning:<br>P1 = Prewarning limit service life in minutes ($TC_MOP1)<br>P2 = Remaining service life in minutes ($TC_MOP2)<br>P3 = Prewarning limit workpiece number ($TC_MOP3)<br>P4 = Remaining workpiece number ($TC_MOP4)<br>P5 = Desired service life ($TC_MOP11)<br>P6 = Desired workpiece number ($TC_MOP13)<br>P7 = Prewarning limit wear (SW 5.1 and later) ($TC_MOP5)<br>This parameter can only be set if bit 5 of machine data $MN_MM_TOOL_MANAGEMENT_MASK has been correspondingly set.<br>P8 = Remaining wear (actual value) (SW 5.1 and later) ($TC_MOP6) cannot be written<br>P9 = Desired wear (SW 5.1 and later) ($TC_MOP15)<br>This parameter can only be set if bit 5 of machine data $MN_MM_TOOL_MANAGEMENT_MASK has been correspondingly set.<br><br>Important: This variable is called "dummy" in the non-Windows-MMC and the PLC!<br><br>The values for P3 to P9 are stored internally as integers. | | | | | |
| - | 0 | | | Double | wr |
| Multi-line: yes | (ToolEdgeNo - 1) * numCuttEdgeParams_ts + ParameterNo | | numCuttEdgeParams_ts * maxnumCuttEdges_Tool | | |

© Siemens AG 2004 All Rights Reserved

## 3.7.4 Area T, Mod. TU: Tool data: User-defined data

**OEM-MMC: Linkitem** /Tool/User/...

The data module TU is defined as a two-dimensional variable array. The module contains user-defined data for all tools. Each element can be addressed via a column and row index:
The column index is the number of the user-defined tool parameter. The number of tool parameters (columns) is to be found in the variable "numToolParams_tu" in the module Y in area N.
The row index is the tool number. If non-existent tools are accessed, the request is acknowledged negatively.
The user-defined tool data are all of the same type.

| **data** | $TC_TPCx[y] x = ParameterNo y = ToolNo | | | | FBW |
|---|---|---|---|---|---|
| User-defined tool parameters. Important: This is a two-dimensional variable. The column index is the parameter number.<br><br>Attention: This variable is called "dummy" in the non-Windows-MMC and the PLC ! | | | | | |
| - | | | | Double | wr |
| Multi-line: yes | Tool number T | | 32000 | | |

© Siemens AG 2004 All Rights Reserved

## 3.7.5 Area T, Mod. TUE: Tool edge data: User-defined data

**OEM-MMC: Linkitem** /Tool/User/...

The data module TUE is organized as a two-dimensional variable array. The module contains user-defined tool edge data for all tools. Each element can be addressed via a column and row index:
The column index is the tool number (T-number), i.e. the user-defined data for all tool edges are to be found in one column.The assignment of a tool to a T-number is to given in the module Tool directory (TV) in the associated area T. If a non-existent tool number is specified for the column index, the request is acknowledged negatively.
The number of rows is derived from the number of parameters per tool edge and the number of tool edges of a tool:

maxZeilenanzahl = numCuttEdgeParams_tu * /T/TV/numCuttEdges (T-number)

The number of parameters per tool edge "numCuttEdgeParams_tu" is given in the module Y in area N. The number of tool-specific tool edges "/T/TV/numCuttEdges" are contained in the module TV in the associated area T.
If neccessary, several lines can be addressed, so that in one request, for example, all user-defined tool edge data of a single tool can be read. The data are all of the same data type.

| **edgeData** | $TC_DPCx[y,z] x=ParamNo,y=ToolNo z=EdgeNo | | | | FBW |
|---|---|---|---|---|---|
| User-defined cutting edge parameter. Important: This is a two-dimensional variable, the column index is the T number<br><br>Caution: This variable is called "dummy" in the non-Windows-MMC and the PLC! | | | | | |
| - | | | | Double | wr |
| Multi-line: yes | (TooledgeNo - 1) * numCuttEdgeParams_tu + ParameterNo | | numCuttEdgeParams_tu * maxnumCuttEdges_Tool | | |

© Siemens AG 2004 All Rights Reserved

## 3.7.6 Area T, Mod. TG: Tool data: Grinding-specific data

**OEM-MMC: Linkitem** /Tool/GrindingData/...

Special tool data are required for grinding tools. These data are contained in the module TG. They can be addressed via several multiple-row variables. The row index corresponds to the T number. If a non-existent T-number is addressed negative acknowledgement is returned. The module tool directory (TV) in the associated area T shows which T-numbers are valid.

| **actToolWide** | $TC_TPG5 | | | | W4 |
|---|---|---|---|---|---|
| Current width of the grinding wheel | | | | | |
| mm, inch, user defined | | | | Double | wr |
| Multi-line: yes | Tool number T | | 32000 | | |

| **conntectPar** | $TC_TPG2 | | | | W4 |
|---|---|---|---|---|---|
| Chaining rule. This parameter ( which is bitwise defined ) specifies which tool parameters of cutting edge 2 and cutting edge 1 are chained. If the value of any chained parameter is altered, the value of the other chained parameter is automatically adapted.<br>If the following bits are set, the corresponding parameters of D1 and D2 are chained:<br>Bit0: tool type<br>Bit2: geometry length1<br>Bit3: geometry length2<br>Bit4: geometry length3<br>Bit11: wear length1<br>Bit12: wear length2<br>Bit13: wear length3<br>Bit20: base dimension/adapter dimension length1<br>Bit21: base dimension/adapter dimension length2<br>Bit22: base dimension/adapter dimension length3<br>The value is stored internally as an integer. | | | | | |
| - | | | | Double | wr |
| Multi-line: yes | Tool number T | | 32000 | | |

| **inclAngle** | $TC_TPG8 | | | | W4 |
|---|---|---|---|---|---|
| Angle of inclination of the inclined grinding wheel in the current plane | | | | | |
| Degree | | -90 | 90 | Double | wr |
| Multi-line: yes | Tool number T | | 32000 | | |

| **maxRotSpeed** | $TC_TPG6 | | | | W4 |
|---|---|---|---|---|---|
| Maximum rotary speed of the grinding wheel | | | | | |
| rev/min , m/min | | | | Double | wr |
| Multi-line: yes | Tool number T | | 32000 | | |

| **maxTipSpeed** | $TC_TPG7 | | | | W4 |
|---|---|---|---|---|---|
| Maximum peripheral speed of the grinding wheel | | | | | |
| mm/min, inch/min, user defined | | | | Double | wr |
| Multi-line: yes | Tool number T | | 32000 | | |

| **minToolDia** | $TC_TPG3 | | | | W4 |
|---|---|---|---|---|---|
| Minimum diameter of the grinding wheel | | | | | |
| mm, inch, user defined | | | | Double | wr |
| Multi-line: yes | Tool number T | | 32000 | | |

© Siemens AG 2004 All Rights Reserved

| **minToolWide** | $TC_TPG4 | | | | W4 |
|---|---|---|---|---|---|
| Minimum width of the grinding wheel | | | | | |
| mm, inch, user defined | | | | Double | wr |
| Multi-line: yes | Tool number T | | 32000 | | |

| **paramNrCCV** | $TC_TPG9 | | | | W4 |
|---|---|---|---|---|---|
| Compensation parameters for the function SUG ("constant perimeter speed of grinding wheel"). These parameters define which compensation value is to be used for SUG, tool monitoring and centerless grinding. The value always refers to cutting edge D1.<br>3: length 1<br>4: length 2<br>5: length 3<br>6: radius<br>The value is stored internally as an integer. | | | | | |
| - | | | | Double | wr |
| Multi-line: yes | Tool number T | | 32000 | | |

| **spinNoDress** | $TC_TPG1 | | | | W4 |
|---|---|---|---|---|---|
| Spindle number to which the monitoring data and the function SUG ("constant perimeter speed of grinding wheel") refer.<br>The value is stored internally as an integer. | | | | | |
| - | | | | Double | wr |
| Multi-line: yes | Tool-number T | | 32000 | | |

© Siemens AG 2004 All Rights Reserved

## 3.7.7 Area T, Mod. TMC: Magazine data: Configuration data

**OEM-MMC: Linkitem** /Tool/MagazineConfiguration/...

Each tool magazine is configured with several parameters during start-up. These configuration data together with the state information are combined in the module TMC.

| **magBLMag** | | | | | W4 |
|---|---|---|---|---|---|
| Number of the internal load magazine | | | | | |
| - | | | | UWord | r |
| Multi-line: no | | | | | |

| **magCBCmd** | | | | | W4 |
|---|---|---|---|---|---|
| Command for magazine execution<br>1: Find_empty location_loading<br>2: Tool_MOVE | | | | | |
| - | | | | UWord | r |
| Multi-line: no | | | | | |

| **magCBCmdState** | | | | | W4 |
|---|---|---|---|---|---|
| Command state of the magazine (for magCBCmd)<br>1: started<br>2: running<br>3: end correct<br>4: end with error | | | | | |
| - | | | | UWord | r |
| Multi-line: no | | | | | |

| **magCBIdent** | $TC_MAMP1 | | | | W4 |
|---|---|---|---|---|---|
| Identifier of the magazine | | | | | |
| - | | | | String[32] | r |
| Multi-line: no | | | | | |

| **magCMCmdPar1** | | | | | W4 |
|---|---|---|---|---|---|
| Return variable for the command MagCBCmd<br>In case of a succesfull return, the return variable is the magazine number.<br>If an error occurs, an error number is set. | | | | | |
| - | | | | UWord | r |
| Multi-line: no | | | | | |

| **magCMCmdPar2** | | | | | W4 |
|---|---|---|---|---|---|
| Return value for command MagCBCmd<br>In case of a succesfull return, the return value is the place number.<br>If an error occurs an error number is set. | | | | | |
| - | | | | UWord | r |
| Multi-line: no | | | | | |

| **magRPlaces** | | | | | W4 |
|---|---|---|---|---|---|
| Total number of real magazine locations (incl. buffer and loading locations) | | | | | |
| - | | | | UWord | r |
| Multi-line: no | | | | | |

© Siemens AG 2004 All Rights Reserved

| **magSearch** | $TC_MAMP2 | | | | W4 |
|---|---|---|---|---|---|
| Type of tool search. This variable is bitwise defined.<br>A set bit has the following meaning:<br>Bit0: search active tool<br>Bit1: search tool by shortest path<br>Bit8: begin search at first location (forwards)<br>Bit9: begin search at current location forwards<br>Bit10: begin search at last location (backwards)<br>Bit11: begin search at current location backwards<br>Bit12: begin search at current location symmetrically | | | | | |
| - | | | | UWord | r |
| Multi-line: no | | | | | |

| **magVPlaces** | | | | | W4 |
|---|---|---|---|---|---|
| Number of defined locations for the control block<br>Number of virtual locations (without buffer and loading locations) for all real magazines in this area unit | | | | | |
| - | | | | UWord | r |
| Multi-line: no | | | | | |

| **magZWMag** | | | | | W4 |
|---|---|---|---|---|---|
| Number of internal buffer magazine | | | | | |
| - | | | | UWord | r |
| Multi-line: no | | | | | |

| **modeWearGroup** | $TC_MAMP3 | | | | |
|---|---|---|---|---|---|
| Definition of strategies relating to wear group.<br>The value is bit-coded. Default setting = 0.<br>Effects on tool status<br>Bit Value Meaning<br>0 0 When a wear group is activated internally, the status of the tools it contains remains unchanged.<br>1 When a wear group is activated internally, the status of the tools it contains changes. One tool from each tool group is set to the "active" state.<br>1 0 When a wear group is disabled internally, the status of the tools it contains remains unchanged.<br>1 When a wear group is disabled internally, the status of the tools it contains changes. The "active" status is cancelled for all tools.<br>"Internally" in this instance means disabling or activation due to a tool change necessitating a change in the wear group. Activating/disabling the appropriate tools after writing system parameters or via OPI is described in Section ???.<br>2... Reserved<br>... Reserved<br>7... Reserved<br>Search strategy for next wear group:<br>Bit Value Meaning<br>8 0 Find the next possible wear group<br>1 Find the wear group with the next-higher group number which can be activated<br>9... Reserved<br>... Reserved<br>11... Reserved<br>Search strategy within the wear group for the tool to be activated<br>Bit Value Meaning<br>12 0 Lowest possible duplo number<br>1 Lowest possible magazine location number<br>13... Reserved<br>... Reserved<br>15... Reserved<br>The active wear group can be disabled completely by negating the contents of $TC_MAP9. It is also possible to disable any selected wear group by negating $TC_MPP5 for a magazine location assigned to the relevant wear group.<br>See also system parameter magWearCompoundNo / $TC_MAP9 (active wear group number) and wear group number of magazine location / $TC_MPP5. | | | | | |
| - | | | | UWord | r |
| Multi-line: yes | 1 | | | | |

© Siemens AG 2004 All Rights Reserved

## 3.7.8 Area T, Mod. TMV: Magazine data: Directory

**OEM-MMC: Linkitem** /Tool/MagazineCatalogue/...

The data module TMV can be used for the following purposes:
1. To display all magazines. The most important magazine information is combined in the module TMV. The existing magazines are sorted in ascending order according to the magazine number without gaps. This means that variables that are defined in this module as one-dimensional arrays contain all magazine information without any gaps. The row index with which a specific array can be addressed does not refer to the magazine number, it is merely a serial number. Inserting/deleting a magazine dynamically changes the contents of a row.

2. To access magazine data in the modules TM, TP and TPM. Before accessing an element in the above modules, the module TV should be consulted to determine which tools have actually been defined.

| **magVIdent** | | | | | |
|---|---|---|---|---|---|
| Identifier of the magazine | | | | | |
| - | | | | String[32] | r |
| Multi-line: yes | Magazine number | | numMagsMax | | |

| **magVNo** | | | | | |
|---|---|---|---|---|---|
| Number of the magazine | | | | | |
| - | | | | UWord | r |
| Multi-line: yes | Magazine number | | numMagsMax | | |

| **numActMags** | | | | | |
|---|---|---|---|---|---|
| Number of magazines in the modules TMV and TM | | | | | |
| - | | | numMagsMax | UWord | r |
| Multi-line: no | | | | | |

© Siemens AG 2004 All Rights Reserved

## 3.7.9 Area T, Mod. TM: Magazine data: General data

**OEM-MMC: Linkitem** /Tool/MagazineDescription/...

This module contains the information for the available tool magazines.

| **magActPlace** | $TC_MAP8 | | | | |
|---|---|---|---|---|---|
| Current magazine position<br>Location number of tool change position | | | | | |
| - | | | | UWord | wr |
| Multi-line: yes | Magazine number | | numMagsMax | | |

| **magCmd** | | | | | |
|---|---|---|---|---|---|
| Command for magazine execution<br>1: Find_empty location_loading<br>2: Tool_MOVE | | | | | |
| - | | | | UWord | r |
| Multi-line: yes | Magazine number | | numMagsMax | | |

| **magCmdPar1** | | | | | |
|---|---|---|---|---|---|
| Command parameter of the magazine<br>In case of a succesfull return, the return value is the magazine number.<br>If an error occurs, an error number is set. | | | | | |
| - | | | | UWord | r |
| Multi-line: yes | Magazine number | | numMagsMax | | |

| **magCmdPar2** | | | | | |
|---|---|---|---|---|---|
| Command parameter of the magazine<br>In case of a succesfull return, the return value is the place number.<br>If an error occurs an error number is set. | | | | | |
| - | | | | UWord | r |
| Multi-line: yes | Magazine number | | numMagsMax | | |

| **magCmdState** | | | | | |
|---|---|---|---|---|---|
| Command state of the magazine<br>1: started<br>2: running<br>3: end correct<br>4: end with error | | | | | |
| - | | | | UWord | r |
| Multi-line: yes | Magazine number | | numMagsMax | | |

| **magDim** | $TC_MAP6 | | | | FBW |
|---|---|---|---|---|---|
| Dimension of the magazine, number of magazine lines in the box magazine<br>Applies to box magazines (magKind = 5) number of lines. For all other magazine types the value is 1. | | | | | |
| - | | | | UWord | r |
| Multi-line: yes | Magazine number | | numMagsMax | | |

| **magIdent** | $TC_MAP2 | | | | FBW |
|---|---|---|---|---|---|
| Identifier of the magazine | | | | | |
| - | | | | String[32] | r |
| Multi-line: yes | Magazine number | | numMagsMax | | |

© Siemens AG 2004 All Rights Reserved

| **magKind** | $TC_MAP1 | | | | FBW |
|---|---|---|---|---|---|
| Type of the magazine<br>1 = chain<br>3 = revolver<br>5 = box magazine<br>7 = internal magazine tool buffer<br>9 = internal magazine loading stations | | | | | |
| - | 0 | | | UWord | r |
| Multi-line: yes | Magazine number | | numMagsMax | | |

| **magLink1** | $TC_MAP4 | | | | FBW |
|---|---|---|---|---|---|
| Chaining 1 of the magazine to the following magazine. Number to (next) background magazine. Can be used with chain, revolver and box magazines (magKind = 1,3 or 5) | | | | | |
| - | -1 | | | UWord | r |
| Multi-line: yes | Magazine number | | numMagsMax | | |

| **magLink2** | $TC_MAP5 | | | | FBW |
|---|---|---|---|---|---|
| Chaining 2 of the magazine to the previous magazine. Backward chaining of background magazines. Can be used for chaining to chain, revolver and box magazines (magKind = 1, 3 or 5) | | | | | |
| - | -1 | | | UWord | r |
| Multi-line: yes | Magazine number | | numMagsMax | | |

| **magLocSearchStrat** | $TC_MPAP10, Bits 8-15 | | | | |
|---|---|---|---|---|---|
| | | | | | |
| - | | | | UWord | r |
| Multi-line: yes | Magazine number | | 320000 | | |

| **magNo** | | | | | |
|---|---|---|---|---|---|
| Number of the magazine | | | | | |
| - | | 1 | numMagsMax | UWord | r |
| Multi-line: yes | Magazine number | | numMagsMax | | |

| **magNrPlaces** | $TC_MAP7 * $TC_MAP6 | | | | |
|---|---|---|---|---|---|
| Number of real locations (in chain magazine) or number of slots (in box magazine) | | | | | |
| - | | | | UWord | r |
| Multi-line: yes | Magazine number | | numMagsMax | | |

| **magState** | $TC_MAP3 | | | | FBW |
|---|---|---|---|---|---|
| State of the magazine<br>1 = current magazine<br>2 = disabled<br>4 = magazine in loading position<br>8 = motion is active<br>16 = enabled for loading | | | | | |
| - | 2 | | | UWord | wr |
| Multi-line: yes | Magazine number | | numMagsMax | | |

| **magToolSearchStrat** | $TC_MPAP10, Bits 0-7 | | | | |
|---|---|---|---|---|---|
| | | | | | |
| - | | | | UWord | r |
| Multi-line: yes | Magazine number | | 320000 | | |

© Siemens AG 2004 All Rights Reserved

| **magWearCompoundNo** | $TC_MAP9 | | | | |
|---|---|---|---|---|---|
| Each magazine has its own active wear group (wear group number).<br>The number of this group is stored in OPI variables magWearCompoundNo:<br>Meaning: Number of active wear group.<br>=0: No wear group active.<br>>0: Number of wear group in which tool search commences.<br>(this is the number of the active wear group.)<br><0: Number of wear group in which tool search commences.<br>However, this wear group is disabled which means that the next tool search is started in the next possible wear group.<br>This system parameter can thus also be used to disable a wear group. See also wear group number of magazine location / $TC_MPP7 and modeWearGroup / $TC_MAMP3.<br><br>Previous name: actWearGrInMag<br>-32000, ..., -1, 0, 1, 2, ... 32000 | | | | | |
| - | 0 | | | Long Integer | wr |
| Multi-line: yes | Magazine number | | numMagsMax | | |

© Siemens AG 2004 All Rights Reserved

## 3.7.10 Area T, Mod. TP: Magazine data: Location data

**OEM-MMC: Linkitem** /Tool/Magazine/...

The data module TP is organized as a two-dimensional variable array. The module contains the state and assignment of all magazine locations of a T area. Each element can be addressed via a column or a line index:
The column index is the magazine number, i.e. the configuration data for all locations of a magazine are contained in a column. The assignment of a magazine to a magazine number is given in the associated module Magazine directory (TMV) in the associated area T. If a non-existent magazine number is specified for the column index, the request is negatively acknowledged.
The number of lines is derived from the number of parameters per magazine location and from the number of magazine locations:

maxZeilenindex = numMagPlaceParams * magNrPlaces

The number of parameters per magazine location "numMagPlaceParams" is given in module Y in area N and is currently 7 (8 with SW 5.1 and later).
The row indices are based on the following scheme:

1: Location type ($TC_MPP1) (read only)
- 1: Magazine location
- 2: Spindle
- 3: Gripper
- 4: Loader
- 5: Transfer location
- 6: Loading station
- 7: Loading point

2: Location type ($TC_MPP2) (read only)
- >0: Location type for virtual location
- =0: "match all" (buffer location)
- 9999: Undefined (not a virtual location)

3: T number of tool in this location ($TC_MPP6)

4: Consideration of adjacent location on / off ($TC_MPP3)
- 0: off
- 1: on

5: Location status ($TC_MPP4)
- 1: Disabled
- 2: Free (<> occupied)
- 4: Reserved for tool in buffer location
- 8: Reserved for tool to be loaded
- 16: Occupied in left half-location
- 32: Occupied in right half-location
- 64: Occupied in top half-location
- 128: Occupied in bottom half-location

6: Physical magazine reference (read only)
Magazine number of magazine to which location belongs

7: Type index ($TC_MPP5) (read only) and new: Wear group number from SW 5.1
Type index/wear group number is read only in SW earlier than 5.1 and read/write from SW 5.1 if it is assigned "Wear group" meaning.
Type index: The locations of a location type in a magazine are numbered in ascending sequence, e.g. type=2, type index=5; ==> Spindle5)
(previous meaning when location type = 1 before P5: Equals location number when location type=1)
Wear group number from SW 5.1 ($TC_MPP5)

© Siemens AG 2004 All Rights Reserved

When location type = 1: Number of wear group to which this magazine location is assigned.
Value range: -32000, ..., -1, 0, 1, 2, ... 32000
=0: Not assigned to a wear group
>0: Number of assigned wear group, this wear group is enabled
<0: Number of assigned wear group, this wear group is disabled
By negating this system parameter, it is possible to disable or enable the whole assigned wear group.
See also magWearCompoundNo / $TC_MAP9 (active wear group number) and modeWearGroup / $TC_MAMP3 (general settings for wear grouping).

8: Adapter number from SW 5.1 ($TC_MPP7)
Reference to adapter data set number.

Associated system data:
The number of parameters of this module changes accordingly:
N / Y, global system data, numMagPlaceParams = 8 from SW 5.1

The number of magazine locations "magNrPlaces" is magazine specific and can be found in module TM in associated area T.

The locations of the buffer magazine and the loading magazine are numbered in ascending order independently of the location type index.

If necessary, several lines can be addressed, so that, for example, all location data of a magazine can be read in a single request. The location data are all of the same type.

| **placeData** | $TC_MPP1[n,m]...$TC_MPP7[n,m] n=MagNo m=SlotNo | | | | |
|---|---|---|---|---|---|
| P1: Location type (read access only) ($TC_MPP1)<br>P2: Location type (read access only) ($TC_MPP2)<br>P3: T number of tool in this location ($TC_MPP6)<br>P4: Consider adjacent location on/off ($TC_MPP3)<br>P5: Location status (bit arry) ($TC_MPP4)<br>P6: Reference for physical magazine (read access only)<br>P7: Location type index (location type numbering) ($TC_MPP5)<br>P8: Number of adapter in magazine location ($TC_MPP7)<br><br>Attention: This variable is called "dummy" in the non-Windows-MMC and the PLC! | | | | | |
| - | | | | UWord | wr |
| Multi-line: yes | (LocationNo - 1) * numMagPlaceParams + ParameterNo | | numMagPlaceParams * magNrPlaces | | |

© Siemens AG 2004 All Rights Reserved

## 3.7.11 Area T, Mod. TPM: Magazine data: Multiple assignment of location data

**OEM-MMC: Linkitem** /Tool/Magazine/...

The data module TPM is organized as a two-dimensional variable array.
ParameterNo = 1: Specifies the magazine number with which a relationship exists.
ParameterNo = 2: Distance (in locations) between the internal location and the magazine change position (cf. magazine number for 1st parameter) with which a relationship will be established.
It contains information about possible multiple assignments. The column index is the magazine number.

For location P with location number p in magazine MP (= column index) numPlaceMulti times the multiple assignments to other magazines which are possible are stored with the associated distances to the change positions in each of the magazines. The offset for row index zi for a location number p is calculated according to the following rule: zi = (p-1) * numPlaceMulti * numPlaceMultiParams + ParameterNo.

Determining the distance between the load position and the change position:

The value 9999 (magazine no. load position) must be specified for the variable multiPlace in the column. The LocationNo (p) for the line is the number of the load position. The line for the first assignment is calculated with ParameterNo = 1. When reading the variable, the system can thus read the magazine number linked to the intended change position. If this magazine number is correct, it is possible to read the number of locations between the load position and the change position with the variable multiPlace with the next higher line number. If the magazine number read was incorrect, the following magazine assignment must be read with the line number increased by numPlaceMulti.
This procedure has to be repeated a max. of numPlaceMultiParams times until the desired relationship has been found.

| **multiPlace** | $TC_MDP1[n,m]...$TC_MDP2[n,m] n=MagNo m=SlotNo | | | | |
|---|---|---|---|---|---|
| P1: Distance between change position of magazine n and location m of 1st internal magazine (load magazine, 9999) ($TC_MDP1)<br>P2: Distance between change position of magazine n and location m of 2nd internal magazine (buffer magazine, 9998) ($TC_MDP2)<br><br>Attention: This variable is called "dummy" in the non-Windows-MMC and PLC ! | | | | | |
| - | | | | UWord | r |
| Multi-line: yes | (LocationNo - 1) * numPlaceMulti * numPlaceMultiParams+Parameter No<br><br>In this case, numPlaceMulti and numPlaceMultiParams are other OPI variables from module Y. | | numPlaceMulti * numPlaceMultiParams * magNrPlaces | | |

© Siemens AG 2004 All Rights Reserved

## 3.7.12 Area T, Mod. TT: Magazine data: Location types

**OEM-MMC: Linkitem** /Tool/Magazine/...

The module TT is organized as a two-dimensional array where the variable with index (1/1) contains the maximum number of columns (corresponds to the location hierarchies) in this module. Each element can be addressed via a column and row index:
The column index is the number of the location hierarchy + 1. The row index is the number of the location type + 1. Row 1 contains the current T-number of rows for a specific location hierarchy as special information.
If all location types are to be read out for a location hierarchy, this must be defined in two steps:
1. The 1st line of each location hierarchy contains the number of assigned location types for this hierarchy
2. Lines 2 ... n can be read out in a single request.

| **placeType** | $TC_MPTH[n,m] n=0...7 Hierarchy m=0...7 SlotType | | | | |
|---|---|---|---|---|---|
| Magazine location hierarchy<br><br>Attention: This variable is called "dummy" in the non-Windows-MMC and the PLC! | | | | | |
| - | | | | UWord | r |
| Multi-line: yes | Number of location type + 1 | | Wert aus Zeile 1 | | |

© Siemens AG 2004 All Rights Reserved

## 3.7.13 Area T, Mod. TV: Tool data: Directory

**OEM-MMC: Linkitem** /Tool/Catalogue/...

Data module TV can be used for the following purposes:

1. For displaying all tools of a magazine. The most important tool information is contained in module TV. Available tools are sorted consecutively in ascending order of T-number. This means that variables that are defined as one-dimensional arrays in this module contain all the tool information without any gaps. The line index with which a specific array is addressed has no connection with the tool number but is only a serial number. Inserting/deleting tools changes the contents of a line dynamically.

2. Access to tool data in modules TD, TG, TO, TS, TU and TUE. Before an element in one of the above modules is accessed, module TV should be consulted to ascertain which tools are actually defined.

SW 5.1 and later: Variable modeSpindleToolRevolver (module N/Y, global system data) defines for circular magazines (T / TM, magazine data, general data, MagKind=3) whether the tool in OPI modules "T / TP, magazine data, location data", "T / TD, tool data, general data", "T/TV, tool data, directory" and "T / AEV, working offsets, directory" remains (new functionality) in its circular magazine location during operation or changes to the buffer magazine (earlier behaviour).

Associated system data:
modeSpindleToolRevolver (module N / Y, global system data) with SW 5.1 and later.

| **nrDuplo** | | | | | |
|---|---|---|---|---|---|
| Duplo number | | | | | |
| - | | | | UWord | r |
| Multi-line: yes | Serial number | | numTools | | |

| **numCuttEdges** | | | | | |
|---|---|---|---|---|---|
| Number of cutting edges of a tool | | | | | |
| - | | | 9 | UWord | r |
| Multi-line: yes | Serial number | | numTools | | |

| **numTools** | | | | | |
|---|---|---|---|---|---|
| Number of tools in the area TO | | | | | |
| - | | 0 | MD MM_NUM_TOOL | UWord | r |
| Multi-line: no | | | | | |

| **TnumWZV** | | | | | |
|---|---|---|---|---|---|
| Last assigned T-number for tool management<br>The last assigned T number is the T number of the new tool<br>last created in the NCK through an NC language command or the PI service. | | | | | |
| - | | | | UWord | r |
| Multi-line: no | | | | | |

© Siemens AG 2004 All Rights Reserved

| **toolIdent** | | | | | |
|---|---|---|---|---|---|
| Tool identifier | | | | | |
| - | | | | String[32] | r |
| Multi-line: yes | Serial number | | numTools | | |

| **toolInMag** | | | | | |
|---|---|---|---|---|---|
| Current magazine in which the tool is located<br>0 = tool not loaded | | | | | |
| - | | | | UWord | r |
| Multi-line: yes | Serial number | | numTools | | |

| **toolInPlace** | | | | | |
|---|---|---|---|---|---|
| Current location in which the tool is located<br>0 = tool not loaded | | | | | |
| - | | | | UWord | r |
| Multi-line: yes | Serial number | | numTools | | |

| **toolNo** | | | | | |
|---|---|---|---|---|---|
| T-number | | | | | |
| - | | | | UWord | r |
| Multi-line: yes | Serial number | | numTools | | |

© Siemens AG 2004 All Rights Reserved

## 3.7.14 Area T, Mod. TF: Parametrizing, return parameters of _N_TMGETT, _N_TSEARC

**OEM-MMC: Linkitem** /Tool/Find/...

This module is used for parameterizing as well as for the return parameters of PI services _N_TMGETT and _N_TSEARC. Access to this module must be T area specific and exclusive. It is up to the clients to guarantee this by using the semaphore mechanism (PI service _N_MMCSEM) with the function number for _N_TMSEARCH.
With _N_TMGETT, NO parameterizing elements (input parameters) are relevant; the only relevant one is the result parameter resultToolNr

| **parDataTAD** | | | | | |
|---|---|---|---|---|---|
| Parameterizing: For parameters with data type DOUBLE of the module TAD a value can be stored as a comparison value for a 'complex search' (_N_TSEARC). The comparison value is combined with the corresponding parameter in the module TAS according to parMasksTAD.<br>The size of the column matches the lines in module TAO.<br><br>See module TAD | | | | | |
| - | | | | Double | wr |
| Multi-line: yes | Column index in the module TAD, i.e. the number of the user-defined tool parameter.<br>The maximum line index thus equals the number of columns in the TAD module. | | numToolParams_tad | | |

| **parDataTAO** | | | | | |
|---|---|---|---|---|---|
| Parameterizing: For parameters with data type DOUBLE of the module TAO a value can be stored as a comparison value for a 'complex search' (_N_TSEARC). The comparison value is combined with the corresponding parameter in the module TAS according to parMasksTAO.<br>The size of the column matches the lines in module TAO.<br><br>See module TAO | | | | | |
| - | | | | Double | wr |
| Multi-line: yes | Column index in the module TAO, i.e. tool number.<br>The maximum line index thus equals the number of columns in the TAO module. | | numCuttEdgeParams_tao | | |

| **parDataTAS** | | | | | |
|---|---|---|---|---|---|
| Parameterizing: For parameters with data type DOUBLE of the module TAS a value can be stored as a comparison value for a 'complex search' (_N_TSEARC). The comparison value is combined with the corresponding parameter in the module TAS according to parMasksTAS.<br>The size of the column matches the lines in module TAS.<br><br>See module TAS | | | | | |
| - | | | | Double | wr |
| Multi-line: yes | Column index in the module TAS, i.e. tool number.<br>The maximum line index thus equals the number of columns in the TAS module. | | numCuttEdgeParams_tas | | |

© Siemens AG 2004 All Rights Reserved

| **parDataTD** | | | | | |
|---|---|---|---|---|---|
| Parameterizing: For parameters with data type UWORD of the module TD a value can be stored as a comparison value for a 'complex search' (_N_TSEARC). The comparison value is combined with the corresponding parameter in the module TD according to parMasksTD.<br>The size of the column matches the lines in module TD.<br><br>See module TD | | | | | |
| - | | | | UWord | wr |
| Multi-line: yes | Index of the parameter (i.e. column index) in the TD module > 1.<br>The maximum line index thus equals the number of columns in the TD module. | | 17 | | |

| **parDataTO** | | | | | |
|---|---|---|---|---|---|
| Parameterizing: For each parameter of the module TO, a value can be stored as a comparison value for the 'complex search' (_N_TSEARC). The comparison value is combined with the corresponding parameter in the module TO according to parMasksTO.<br>The size of the column matches the data set of an edge in module TO.<br><br>See module TO | | | | | |
| - | | | | Double | wr |
| Multi-line: yes | Line index in the TO module, i.e. a cutting edge offset value parameter:<br>(EdgeNo - 1) * numCuttEdgeParams + ParameterNo<br>The maximum line index is thus the maximum cutting edge offset value parameter in the module TO. | | numCuttEdgeParams * maxnumCuttEdges_Tool | | |

| **parDataToolIdentTD** | | | | | |
|---|---|---|---|---|---|
| Parameterizing: For the parameter with data type string[32] (tool identifier) of the module TD a value can be stored as a comparison value for a 'complex search' (_N_TSEARC). The comparison value is combined with the corresponding parameter in the module TD according to parMasksTD.<br><br>See module TD | | | | | |
| - | | | | String[32] | wr |
| Multi-line: no | | | | | |

| **parDataTS** | | | | | |
|---|---|---|---|---|---|
| Parameterizing: For each parameter of the module TS a value can be stored as a comparison value for a 'complex search' (_N_TSEARC). The comparison value is combined with the corresponding parameter in the module TS according to parMasksTS.<br>The size of the column matches the data set of an edge in module TS.<br><br>See module TS | | | | | |
| - | | | | Double | wr |
| Multi-line: yes | Line index in the TS module:<br>(EdgeNo - 1) * numCuttEdgeParams_ts + ParameterNo<br>The maximum line index is thus the maximum cutting edge parameter in the module TS. | | numCuttEdgeParams_ts * maxnumCuttEdges_Tool | | |

© Siemens AG 2004 All Rights Reserved

| **parDataTU** | | | | | |
|---|---|---|---|---|---|
| Parameterizing: For each parameter of the module TU a value can be stored as a comparison value for a 'complex search' (_N_TSEARC). The comparison value is combined with the corresponding parameter in the module TU according to parMasksTU.<br>The size of the column matches the lines in module TU.<br><br>See module TU | | | | | |
| - | | | | Double | wr |
| Multi-line: yes | Index of the parameter (i.e. column index) in the TU module is thus the number of the user-defined tool parameter.<br>The maximum line index thus equals the number of columns in the TU module (numToolParams_tu). | | numToolParams_tu | | |

| **parDataTUE** | | | | | |
|---|---|---|---|---|---|
| Parameterizing: For each parameter of the module TUE a value can be stored as a comparison value for a 'complex search' (_N_TSEARC). The comparison value is combined with the corresponding parameter in the module TUE according to parMasksTUE.<br>The size of the column matches the data set of an edge in module TUE.<br><br>See module TUE | | | | | |
| - | | | | Double | wr |
| Multi-line: yes | Line index in the TUE module:<br>(EdgeNo - 1) * numCuttEdgeParams_tu + ParameterNo<br>The maximum line index is thus the maximum cutting edge parameter in the module TUE. | | numCuttEdgeParams_tu * maxnumCuttEdges_Tool | | |

| **parDataTUS** | | | | | |
|---|---|---|---|---|---|
| Parameterizing: For each parameter of the module TUS a value can be stored as a comparison value for a 'complex search' (_N_TUSEARC). The comparison value is combined with the corresponding parameter in the module TUS according to parMasksTUS.<br>The size of the column matches the data set of an edge in module TUS.<br><br>See module TUS | | | | | |
| - | | | | Double | wr |
| Multi-line: yes | Line index in the TUS module:<br>Number of the user-defined parameter + (number of the tool cutting edge -1) * numCuttEdgeParams_tus.<br>The maximum line index is thus the maximum cutting edge parameter in the module TUS. | | numCuttEdgeParams_tus * maxnumCuttEdges_Tool | | |

© Siemens AG 2004 All Rights Reserved

| **parMasksTAD** | | | | | |
|---|---|---|---|---|---|
| Parameterizing: There is a mask for each parameter of the module TAD that indicates whether it is to serve as a search criterion for a 'complex search' (_N_TSEARC) and how it is to be combined. The corresponding comparison values are stored in parDataTAD. If more than one parameter ( i.e. search criteron) has been selected (#0), they are logically combined with AND.<br><br>Value 0 : Corresponding operand is not evaluated / Variable is not a criterion for comparison<br>Value 1 : == (equal)<br>Value 2 : < (less than)<br>Value 3 : > (greater than)<br>Value 4 : <= (less or equal)<br>Value 5 : >= (greater or equal)<br>Value 6 : && (bitwise AND, value only allowed for operands of the types WORD and DOUBLEWORD)<br><br>For string operands "==" is the only operator allowed | | | | | |
| - | 0 | 0 | 6 | UWord | wr |
| Multi-line: yes | Column index in the module TAD, i.e. the number of the user-defined tool parameter.<br>The maximum line index thus equals the number of columns in the TAD module. | | numToolParams_tad | | |

| **parMasksTAO** | | | | | |
|---|---|---|---|---|---|
| Parameterizing: There is a mask for each parameter of the module TAO that indicates whether it is to serve as a search criterion for a 'complex search' (_N_TSEARC) and how it is to be combined. The corresponding comparison values are stored in parDataTAO. If more than one parameter ( i.e. search criteron) has been selected (#0), they are logically combined with AND.<br><br>Value 0 : Corresponding operand is not evaluated / Variable is not a criterion for comparison<br>Value 1 : == (equal)<br>Value 2 : < (less than)<br>Value 3 : > (greater than)<br>Value 4 : <= (less or equal)<br>Value 5 : >= (greater or equal)<br>Value 6 : && (bitwise AND, value only allowed for operands of the types WORD and DOUBLEWORD)<br><br>For string operands "==" is the only operator allowed | | | | | |
| - | 0 | 0 | 6 | UWord | wr |
| Multi-line: yes | Column index in the module TAO, i.e. tool number.<br>The maximum line index thus equals the number of columns in the TAO module. | | numCuttEdgeParams_tao | | |

© Siemens AG 2004 All Rights Reserved

| **parMasksTAS** | | | | | |
|---|---|---|---|---|---|
| Parameterizing: There is a mask for each parameter of the module TAS that indicates whether it is to serve as a search criterion for a 'complex search' (_N_TSEARC) and how it is to be combined. The corresponding comparison values are stored in parDataTAS. If more than one parameter ( i.e. search criteron) has been selected (#0), they are logically combined with AND.<br><br>Value 0 : Corresponding operand is not evaluated / Variable is not a criterion for comparison<br>Value 1 : == (equal)<br>Value 2 : < (less than)<br>Value 3 : > (greater than)<br>Value 4 : <= (less or equal)<br>Value 5 : >= (greater or equal)<br>Value 6 : && (bitwise AND, value only allowed for operands of the types WORD and DOUBLEWORD)<br><br>For string operands "==" is the only operator allowed | | | | | |
| - | 0 | 0 | 6 | UWord | wr |
| Multi-line: yes | Column index in the module TAS, i.e. tool number.<br>The maximum line index thus equals the number of columns in the TAS module. | | numCuttEdgeParams_tas | | |

| **parMasksTD** | | | | | |
|---|---|---|---|---|---|
| Parameterizing: There is a mask for each parameter of the module TD that indicates whether it is to serve as a search criterion for a 'complex search' (_N_TSEARC) and how it is to be combined. The corresponding comparison values are stored in parDataTD. If more than one parameter ( i.e. search criteron) has been selected (#0), they are logically combined with AND.<br><br>Value 0 : Corresponding operand is not evaluated / Variable is not a criterion for comparison<br>Value 1 : == (equal)<br>Value 2 : < (less than)<br>Value 3 : > (greater than)<br>Value 4 : <= (less or equal)<br>Value 5 : >= (greater or equal)<br>Value 6 : && (bitwise AND, value only allowed for operands of the types WORD and DOUBLEWORD)<br><br>For string operands "==" is the only operator allowed | | | | | |
| - | 0 | 0 | 6 | UWord | wr |
| Multi-line: yes | Index of the parameter (i.e. column index) in the TD module > 1.<br>The maximum line index thus equals the number of columns in the TD module. | | 17 | | |

© Siemens AG 2004 All Rights Reserved

| **parMasksTO** | | | | | |
|---|---|---|---|---|---|
| Parameterizing: There is a mask for each parameter of the module TO that indicates whether it is to serve as a search criterion for a 'complex search' (_N_TSEARC) and how it is to be combined. The corresponding comparison values are stored in parDataTO. If more than one parameter ( i.e. search criteron) has been selected (#0), they are logically combined with AND.<br><br>Value 0 : Corresponding operand is not evaluated / Variable is not a criterion for comparison<br>Value 1 : == (equal)<br>Value 2 : < (less than)<br>Value 3 : > (greater than)<br>Value 4 : <= (less or equal)<br>Value 5 : >= (greater or equal)<br>Value 6 : && (bitwise AND, value only allowed for operands of the types WORD and DOUBLEWORD)<br><br>For string operands "==" is the only operator allowed | | | | | |
| - | 0 | 0 | 6 | UWord | wr |
| Multi-line: yes | Line index in the TO module is thus a cutting edge offset value parameter:<br>(EdgeNo - 1) * numCuttEdgeParams + ParameterNo<br>The maximum line index is thus the maximum cutting edge offset value parameter in the module TO. | | numCuttEdgeParams * maxnumCuttEdges_Tool | | |

| **parMasksTS** | | | | | |
|---|---|---|---|---|---|
| Parameterizing: There is a mask for each parameter of the module TS that indicates whether it is to serve as a search criterion for a 'complex search' (_N_TSEARC) and how it is to be combined. The corresponding comparison values are stored in parDataTS. If more than one parameter ( i.e. search criteron) has been selected (#0), they are logically combined with AND.<br><br>Value 0 : Corresponding operand is not evaluated / Variable is not a criterion for comparison<br>Value 1 : == (equal)<br>Value 2 : < (less than)<br>Value 3 : > (greater than)<br>Value 4 : <= (less or equal)<br>Value 5 : >= (greater or equal)<br>Value 6 : && (bitwise AND, value only allowed for operands of the types WORD and DOUBLEWORD)<br><br>For string operands "==" is the only operator allowed | | | | | |
| - | 0 | 0 | 6 | UWord | wr |
| Multi-line: yes | Line index in the TS module:<br>(EdgeNo - 1) * numCuttEdgeParams_ts + ParameterNo<br>The maximum line index is thus the maximum cutting edge parameter in the module TS. | | numCuttEdgeParams_ts * maxnumCuttEdges_Tool | | |

© Siemens AG 2004 All Rights Reserved

| **parMasksTU** | | | | | |
|---|---|---|---|---|---|
| Parameterizing: There is a mask for each parameter of the module TU that indicates whether it is to serve as a search criterion for a 'complex search' (_N_TSEARC) and how it is to be combined. The corresponding comparison values are stored in parDataTU. If more than one parameter ( i.e. search criteron) has been selected (#0), they are logically combined with AND.<br><br>Value 0 : Corresponding operand is not evaluated / Variable is not a criterion for comparison<br>Value 1 : == (equal)<br>Value 2 : < (less than)<br>Value 3 : > (greater than)<br>Value 4 : <= (less or equal)<br>Value 5 : >= (greater or equal)<br>Value 6 : && (bitwise AND, value only allowed for operands of the types WORD and DOUBLEWORD)<br>For string operands "==" is the only operator allowed | | | | | |
| - | 0 | 0 | 6 | UWord | wr |
| Multi-line: yes | Index of the parameter (i.e. column index) in the TU module, thus the number of the user-defined tool parameter.<br>The maximum line index thus equals the number of columns in the TU module (numToolParams_tu). | | numToolParams_tu | | |

| **parMasksTUE** | | | | | |
|---|---|---|---|---|---|
| Parameterizing: There is a mask for each parameter of the module TUE that indicates whether it is to serve as a search criterion for a 'complex search' (_N_TSEARC) and how it is to be combined. The corresponding comparison values are stored in parDataTUE. If more than one parameter ( i.e. search criteron) has been selected (#0), they are logically combined with AND.<br><br>Value 0 : Corresponding operand is not evaluated / Variable is not a criterion for comparison<br>Value 1 : == (equal)<br>Value 2 : < (less than)<br>Value 3 : > (greater than)<br>Value 4 : <= (less or equal)<br>Value 5 : >= (greater or equal)<br>Value 6 : && (bitwise AND, value only allowed for operands of the types WORD and DOUBLEWORD)<br><br>For string operands "==" is the only operator allowed | | | | | |
| - | 0 | 0 | 6 | UWord | wr |
| Multi-line: yes | Line index in the TUE module:<br>(EdgeNo - 1) * numCuttEdgeParams_tu + ParameterNo<br>The maximum line index is thus the maximum cutting edge parameter in the module TUE. | | numCuttEdgeParams_tu * maxnumCuttEdges_Tool | | |

© Siemens AG 2004 All Rights Reserved

| **parMasksTUS** | | | | | |
|---|---|---|---|---|---|
| Parameterizing: There is a mask for each parameter of the module TUS that indicates whether it is to serve as a search criterion for a 'complex search' (_N_TUSEARC) and how it is to be combined. The corresponding comparison values are stored in parDataTUS. If more than one parameter ( i.e. search criteron) has been selected (#0), they are logically combined with AND.<br><br>Value 0 : Corresponding operand is not evaluated / Variable is not a criterion for comparison<br>Value 1 : == (equal)<br>Value 2 : < (less than)<br>Value 3 : > (greater than)<br>Value 4 : <= (less or equal)<br>Value 5 : >= (greater or equal)<br>Value 6 : && (bitwise AND, value only allowed for operands of the types WORD and DOUBLEWORD)<br><br>For string operands "==" is the only operator allowed | | | | | |
| - | 0 | 0 | 6 | UWord | wr |
| Multi-line: yes | Line index in the TUS module: Number of the user-defined parameter + (number of the tool cutting edge -1) * numCuttEdgeParams_tus. The maximum line index is thus the maximum cutting edge parameter in the module TUS. | | numCuttEdgeParams_tus * maxnumCuttEdges_Tool | | |

| **resultNrOfTools** | | | | | |
|---|---|---|---|---|---|
| Result: Number of tools found<br>In the case of _N_TMGETT, it is possible to find no tools (value=0) or exactly 1 tool (value 1); in the case of _N_TSEARC, the number of found tools can be any number > 0, limited by the number of tools in the NC or no tools at all (value=0). | | | | | |
| - | 0 | 0 | numTools | UWord | r |
| Multi-line: yes | 1 | | 1 | | |

| **resultToolNr** | | | | | |
|---|---|---|---|---|---|
| Result: T-numbers of the tools found<br>The array elements contain the internal T- numbers of the tools found. The storing order is the order in which the tools have been found by the PI-Service. | | | | | |
| - | 0 | 0 | 31999 | UWord | r |
| Multi-line: no | | | tfNrOfResults | | |

© Siemens AG 2004 All Rights Reserved

## 3.7.15 Area T, Mod. TUM: Tool data: user magazine data

**OEM-MMC: Linkitem** /Tool/MagazineDescription/...

| **userData** | $TC_MAPCx[y] x = ParameterNo y = MagazineNo | | | | |
|---|---|---|---|---|---|
| Magazine user data for a tool magazine. These parameters can only be used if the machine data $MN_MM_NUM_CC_MAGAZINE_PARAM and $MN_MM_TOOL_MANAGEMENT_MASK have been set accordingly. | | | | | |
| - | 0 | | | Long Integer | wr |
| Multi-line: yes | Number of the user-defined parameter | | numMagParams_u | | |

© Siemens AG 2004 All Rights Reserved

## 3.7.16 Area T, Mod. TUP: Tool data: user magatine place data

**OEM-MMC: Linkitem** /Tool/Magazine/...

| **userPlaceData** | $TC_MPPCx[y,z] x=ParamNo y=MagazineNo z=MagPlaceNo | | | | |
|---|---|---|---|---|---|
| Magazine location user data for a tool magazine. These parameters can only be used if the machine data $MN_MM_NUM_CC_MAGLOC_PARAM and $MN_MM_TOOL_MANAGEMENT_MASK have been set accordingly. | | | | | |
| - | 0 | | | Long Integer | wr |
| Multi-line: yes | Number of the user-defined parameter + numMagLocParams_u * (number of the magazine location - 1) | | numMagLocParams_u * magNrPlaces | | |

© Siemens AG 2004 All Rights Reserved

## 3.7.17 Area T, Mod. TUS: Tool data: user monitoring data

**OEM-MMC: Linkitem** /Tool/Supervision/...

| **userData** | $TC_MOPCx[y,z] x=ParamNo,y=T-Number,z=Edge | | | | |
|---|---|---|---|---|---|
| User data for monitoring a cutting edge These parameters can only be used if the machine data $MN_MM_NUM_CC_MON_PARAM and $MN_MM_TOOL_MANAGEMENT_MASK have been set accordingly. | | | | | |
| - | 0 | | | Double | wr |
| Multi-line: yes | Number of the user-defined parameter + (number of the cutting edge -1) * numCuttEdgeParams_tus | | numCuttEdgeParams_tus * maxnumCuttEdges_Tool | | |

© Siemens AG 2004 All Rights Reserved

## 3.7.18 Area T, Mod. AD: Adapter data

**OEM-MMC: Linkitem** /Tool/Adapter/...

Adapter data are used to define the dimensions of an adapter (L1, L2, L3) per magazine location and the direction (transformation) of loaded tools. The transformation is applied when cutting edge data are processed in OPI modules TOT, TOST and TOET if the tool is loaded in a magazine location to which adapter data are assigned.
Adapter data exist independently of magazine location data. Magazine location data contain a reference (see module TP, placeData) to the adapter data.

| **adaptData** | $TC_ADPTx; x=1,...3, $TC_ADPTT | | | | |
|---|---|---|---|---|---|
| Adapter data | | | | | |
| mm, inch, user defined | 0.0 | | | Double | wr |
| Multi-line: yes | ParameterNo | | numParams_Adapt | | |

© Siemens AG 2004 All Rights Reserved

## 3.7.19 Area T, Mod. AEV: Working offsets: Directory

**OEM-MMC: Linkitem** /Tool/ActiveCatalogue/...

The active tool edges are sorted in consecutive ascending D number sequence in the AEV module. This module also contains the essential tool data for each D number entered. "Active" in this case refers to the replacement tools.
(If the "unique D numbers" option is not activated in the NC, the edges are sorted according to ascending ToolIdent and DuploNumber. The D number variable is then set to 0 on all lines in this module.)

The D number assignment is not necessarily unique for active tools. For this reason, the same D number may be entered in several lines (successively).
The line number is a serial number which is not related to the D number.
The number of active tool edges is stored in numActDEdges (module AEV), e.g. example 10,
i.e. module AEV contains entries for 10 tool edges. These are sorted in ascending D number sequence. The tool edge with the lowest D number has index (serial number) 1, the next-higher D number index 2, etc. and the edge with the highest D number index 10.

When tools are activated/deactivated and D numbers re-assigned, the entries for a D number change line dynamically.
Module T / AEV is organized as a 1-dimensional variable array and can be used for the following purposes:
- Display all tool edges, including D numbers, of active tools.
- Display associated tool data

The module contains the following information which can be addressed via a column index:
- Single column, in 1st line only. Number of D numbers (lines, tool edges) in the current list
- The other columns apply to all lines, each line contains tool edge data with the following information:
  - D number
  - Internal T number of associated tool
- Tool edge number relative to tool
  - Tool identifier
  - Duplo number
  - Magazine number and
  - Location number of tool

Individual values cannot be altered via this module.

Re-assignment of D numbers and changes in allocation to tools (deactivate, activate replacement tools) and other modifications to data cause changes to toolCounter in "C / S Channel-specific status data".

Variable modeSpindleToolRevolver (module N/Y, global system data) defines for circular magazines (T / TM, magazine data, general data, MagKind=3) whether the tool in OPI modules "T / TP, magazine data, location data", "T / TD, tool data, general data", "T/TV, tool data, directory" and "T / AEV, working offsets, directory" remains (new functionality) in its circular magazine location during operation or changes to the buffer magazine (earlier behaviour)).

© Siemens AG 2004 All Rights Reserved

| **cuttEdgeNo** | | | | | |
|---|---|---|---|---|---|
| Number of edge for this tool<br><br>Meaningful and defined only in connection with "unique D numbers" function. | | | | | |
| - | | 1 | maxnumCuttEdges_Tool | UWord | r |
| Multi-line: yes | Serial number of active edges | | numActDEdges | | |

| **DNo** | | | | | |
|---|---|---|---|---|---|
| D number<br><br>Meaningful and defined only in connection with "unique D numbers" function. | | | | | |
| - | | | | UWord | r |
| Multi-line: yes | Current number of active tool edges | | numActDEdges | | |

| **duploNo** | | | | | |
|---|---|---|---|---|---|
| Duplo number<br><br>Meaningful and defined only in connection with "unique D numbers" function. | | | | | |
| - | | | | UWord | r |
| Multi-line: yes | Serial number of active edges | | numActDEdges | | |

| **numActDEdges** | | | | | |
|---|---|---|---|---|---|
| Number of D numbers in this list<br><br>Meaningful and defined only in connection with "unique D numbers" function.<br>When tool management function is active:<br>Specifies the number of edges belonging to tools with "active"<br>status (contained in the TO unit)<br>When tool management function is not active:<br>Specifies the number of all edges contained in the TO unit. | | | | | |
| - | | | | UWord | r |
| Multi-line: yes | 1 | | 1 | | |

| **toolIdent** | | | | | |
|---|---|---|---|---|---|
| Tool identifier<br><br>Meaningful and defined only in connection with "unique D numbers" function. | | | | | |
| - | | | | String[32] | r |
| Multi-line: yes | Serial number of active edges | | numActDEdges | | |

| **toolInMag** | | | | | |
|---|---|---|---|---|---|
| Magazine in which tool is located<br><br>Meaningful and defined only in connection with "unique D numbers" function. | | | | | |
| - | | | | UWord | r |
| Multi-line: yes | Serial number of active edges | | numActDEdges | | |

| **toolInPlace** | | | | | |
|---|---|---|---|---|---|
| Magazine location of tool<br><br>Meaningful and defined only in connection with "unique D numbers" function. | | | | | |
| - | | | | UWord | r |
| Multi-line: yes | Serial number of active edges | | numActDEdges | | |

© Siemens AG 2004 All Rights Reserved

| **toolNo** | | | | | |
|---|---|---|---|---|---|
| Internal T number<br><br>Meaningful and defined only in connection with "unique D numbers" function. | | | | | |
| - | | | | UWord | r |
| Multi-line: yes | Serial number of active edges | | numActDEdges | | |

© Siemens AG 2004 All Rights Reserved

## 3.7.20 Area T, Mod. TC: Toolholder parameters

**OEM-MMC: Linkitem** /Tool/ToolCarrier/...

Module TC contains the data which define an orientatable toolholder (offset vectors, axis directions, rotation angle, type information).
It is also possible to read the current positions of the toolholder axes and the differences between the current and programmed axis values for the active toolholder.

| **tcCarr1** | $TC_CARR1 | | | | |
|---|---|---|---|---|---|
| x component of offset vector l1 | | | | | |
| - | 0 | | | Double | wr |
| Multi-line: yes | No. of toolholder | | $MN_MM_NUM_TOOL_CARRIER / numToBaust | | |

| **tcCarr10** | $TC_CARR10 | | | | |
|---|---|---|---|---|---|
| x component of rotary axis v2 | | | | | |
| - | 0 | | | Double | wr |
| Multi-line: yes | No. of toolholder | | $MN_MM_NUM_TOOL_CARRIER / numToBaust | | |

| **tcCarr11** | $TC_CARR11 | | | | |
|---|---|---|---|---|---|
| y component of rotary axis v2 | | | | | |
| - | 0 | | | Double | wr |
| Multi-line: yes | No. of toolholder | | $MN_MM_NUM_TOOL_CARRIER / numToBaust | | |

| **tcCarr12** | $TC_CARR12 | | | | |
|---|---|---|---|---|---|
| z component of rotary axis v2 | | | | | |
| - | 0 | | | Double | wr |
| Multi-line: yes | No. of toolholder | | $MN_MM_NUM_TOOL_CARRIER / numToBaust | | |

| **tcCarr13** | $TC_CARR13 | | | | |
|---|---|---|---|---|---|
| Angle of rotation alpha1 (in degrees) | | | | | |
| Degree | 0 | | | Double | wr |
| Multi-line: yes | No. of toolholder | | $MN_MM_NUM_TOOL_CARRIER / numToBaust | | |

| **tcCarr14** | $TC_CARR14 | | | | |
|---|---|---|---|---|---|
| Angle of rotation alpha2 (in degrees) | | | | | |
| Degree | 0 | | | Double | wr |
| Multi-line: yes | No. of toolholder | | $MN_MM_NUM_TOOL_CARRIER / numToBaust | | |

| **tcCarr15** | $TC_CARR15 | | | | |
|---|---|---|---|---|---|
| x component of offset vector l3 | | | | | |
| - | 0 | | | Double | wr |
| Multi-line: yes | No. of toolholder | | $MN_MM_NUM_TOOL_CARRIER / numToBaust | | |

© Siemens AG 2004 All Rights Reserved

| **tcCarr16** | $TC_CARR16 | | | | |
|---|---|---|---|---|---|
| y component of offset vector l3 | | | | | |
| - | 0 | | | Double | wr |
| Multi-line: yes | No. of toolholder | | $MN_MM_NUM_TOOL_CARRIER / numToBaust | | |

| **tcCarr17** | $TC_CARR17 | | | | |
|---|---|---|---|---|---|
| z component of offset vector l3 | | | | | |
| - | 0 | | | Double | wr |
| Multi-line: yes | No. of toolholder | | $MN_MM_NUM_TOOL_CARRIER / numToBaust | | |

| **tcCarr18** | $TC_CARR18 | | | | |
|---|---|---|---|---|---|
| x component of offset vector l4 | | | | | |
| - | 0 | | | Double | wr |
| Multi-line: yes | No. of toolholder | | $MN_MM_NUM_TOOL_CARRIER / numToBaust | | |

| **tcCarr19** | $TC_CARR19 | | | | |
|---|---|---|---|---|---|
| y component of offset vector l4 | | | | | |
| - | 0 | | | Double | wr |
| Multi-line: yes | No. of toolholder | | $MN_MM_NUM_TOOL_CARRIER / numToBaust | | |

| **tcCarr2** | $TC_CARR2 | | | | |
|---|---|---|---|---|---|
| y component of offset vector l1 | | | | | |
| - | 0 | | | Double | wr |
| Multi-line: yes | No. of toolholder | | $MN_MM_NUM_TOOL_CARRIER / numToBaust | | |

| **tcCarr20** | $TC_CARR20 | | | | |
|---|---|---|---|---|---|
| z component of offset vector l4 | | | | | |
| - | 0 | | | Double | wr |
| Multi-line: yes | No. of toolholder | | $MN_MM_NUM_TOOL_CARRIER / numToBaust | | |

| **tcCarr21** | $TC_CARR21 | | | | |
|---|---|---|---|---|---|
| Axis identifier of 1st rotary axis | | | | | |
| - | 0 | | | String[32] | wr |
| Multi-line: yes | No. of toolholder | | $MN_MM_NUM_TOOL_CARRIER / numToBaust | | |

| **tcCarr22** | $TC_CARR22 | | | | |
|---|---|---|---|---|---|
| Axis identifier of 2nd rotary axis | | | | | |
| - | 0 | | | String[32] | wr |
| Multi-line: yes | No. of toolholder | | $MN_MM_NUM_TOOL_CARRIER / numToBaust | | |

| **tcCarr23** | $TC_CARR23 | | | | |
|---|---|---|---|---|---|
| Kinematic type<br>Kinematic type: P: Rotatable workpiece (part)<br>M: Rotatable tool and rotatable workpiece (mixed)<br>T or any character except P and M: Rotatable tool | | | | | |
| - | 0 | | | String[32] | wr |
| Multi-line: yes | No. of toolholder | | $MN_MM_NUM_TOOL_CARRIER / numToBaust | | |

© Siemens AG 2004 All Rights Reserved

| **tcCarr24** | $TC_CARR24 | | | | |
|---|---|---|---|---|---|
| Offset of 1st rotary axis in degrees | | | | | |
| - | 0 | | | Double | wr |
| Multi-line: yes | No. of toolholder | | $MN_MM_NUM_TOOL_CARRIER / numToBaust | | |

| **tcCarr25** | $TC_CARR25 | | | | |
|---|---|---|---|---|---|
| Offset of 2nd rotary axis in degrees | | | | | |
| - | 0 | | | Double | wr |
| Multi-line: yes | No. of toolholder | | $MN_MM_NUM_TOOL_CARRIER / numToBaust | | |

| **tcCarr26** | $TC_CARR26 | | | | |
|---|---|---|---|---|---|
| Offset of Hirth tooth system in degrees of 1st rotary axis | | | | | |
| - | 0 | | | Double | wr |
| Multi-line: yes | No. of toolholder | | $MN_MM_NUM_TOOL_CARRIER / numToBaust | | |

| **tcCarr27** | $TC_CARR27 | | | | |
|---|---|---|---|---|---|
| Offset of Hirth tooth system in degrees of 2nd rotary axis | | | | | |
| - | 0 | | | Double | wr |
| Multi-line: yes | No. of toolholder | | $MN_MM_NUM_TOOL_CARRIER / numToBaust | | |

| **tcCarr28** | $TC_CARR28 | | | | |
|---|---|---|---|---|---|
| Increment of Hirth tooth system in degrees of 1st rotary axis | | | | | |
| - | 0 | | | Double | wr |
| Multi-line: yes | No. of toolholder | | $MN_MM_NUM_TOOL_CARRIER / numToBaust | | |

| **tcCarr29** | $TC_CARR29 | | | | |
|---|---|---|---|---|---|
| Increment of Hirth tooth system in degrees of 2nd rotary axis | | | | | |
| - | 0 | | | Double | wr |
| Multi-line: yes | No. of toolholder | | $MN_MM_NUM_TOOL_CARRIER / numToBaust | | |

| **tcCarr3** | $TC_CARR3 | | | | |
|---|---|---|---|---|---|
| z component of offset vector l1 | | | | | |
| - | 0 | | | Double | wr |
| Multi-line: yes | No. of toolholder | | $MN_MM_NUM_TOOL_CARRIER / numToBaust | | |

| **tcCarr30** | $TC_CARR30 | | | | |
|---|---|---|---|---|---|
| Minimum position of 1st rotary axis | | | | | |
| - | 0 | | | Double | wr |
| Multi-line: yes | No. of toolholder | | $MN_MM_NUM_TOOL_CARRIER / numToBaust | | |

| **tcCarr31** | $TC_CARR31 | | | | |
|---|---|---|---|---|---|
| Minimum position of 2nd rotary axis | | | | | |
| - | 0 | | | Double | wr |
| Multi-line: yes | No. of toolholder | | $MN_MM_NUM_TOOL_CARRIER / numToBaust | | |

© Siemens AG 2004 All Rights Reserved

| **tcCarr32** | $TC_CARR32 | | | | |
|---|---|---|---|---|---|
| Maximum position of 1st rotary axis | | | | | |
| - | 0 | | | Double | wr |
| Multi-line: yes | No. of toolholder | | $MN_MM_NUM_TOOL_CARRIER / numToBaust | | |

| **tcCarr33** | $TC_CARR33 | | | | |
|---|---|---|---|---|---|
| Maximum position of 2nd rotary axis | | | | | |
| - | 0 | | | Double | wr |
| Multi-line: yes | No. of toolholder | | $MN_MM_NUM_TOOL_CARRIER / numToBaust | | |

| **tcCarr34** | $TC_CARR34 | | | | |
|---|---|---|---|---|---|
| Toolholder name<br>Contains a freely definable string provided as a freely definable identifier for the orientatable toolholder.<br>It has no meaning as yet within the NCK and is not evaluated either.<br>The identifier should not be used for other purposes since a later expansion will allow an orientatable toolholder to be activated via a name as well as via numbers | | | | | |
| - | | | | String[32] | wr |
| Multi-line: yes | No. of toolholder | | $MN_MM_NUM_TOOL_CARRIER | | |

| **tcCarr35** | $TC_CARR35 | | | | |
|---|---|---|---|---|---|
| Axis name 1<br>Contains a freely definable string provided as a free identifier for the first rotary axis.<br>It has no meaning whatsoever within the NCK, neither is it evaluated.<br>It can therefore be used for any other purposes. | | | | | |
| - | 0 | | | String[32] | wr |
| Multi-line: yes | No. of toolholder | | $MN_MM_NUM_TOOL_CARRIER | | |

| **tcCarr36** | $TC_CARR36 | | | | |
|---|---|---|---|---|---|
| Axis name 2<br>Contains a freely definable string provided as a free identifier for the second rotary axis.<br>It has no meaning whatsoever within the NCK, neither is it evaluated.<br>It can therefore be used for any other purposes. | | | | | |
| - | | | | String[32] | wr |
| Multi-line: yes | No. of toolholder | | $MN_MM_NUM_TOOL_CARRIER | | |

| **tcCarr37** | $TC_CARR37 | | | | |
|---|---|---|---|---|---|
| Identifier<br>Contains an integer number for identifying the toolholder.<br>It has no meaning whatsoever within the NCK, neither is it evaluated. | | | | | |
| - | 0 | | | UDoubleword | wr |
| Multi-line: yes | No. of toolholder | | $MN_MM_NUM_TOOL_CARRIER | | |

| **tcCarr38** | $TC_CARR38 | | | | |
|---|---|---|---|---|---|
| Position component X<br>Contains a position (X component of return position).<br>It has no meaning whatsoever within the NCK, neither is it evaluated. | | | | | |
| - | 0 | | | Double | wr |
| Multi-line: yes | No. of toolholder | | $MN_MM_NUM_TOOL_CARRIER | | |

© Siemens AG 2004 All Rights Reserved

| **tcCarr39** | $TC_CARR39 | | | | |
|---|---|---|---|---|---|
| Position component Y<br>Contains a position (Y component of return position).<br>It has no meaning whatsoever within the NCK, neither is it evaluated. | | | | | |
| - | 0 | | | Double | wr |
| Multi-line: yes | No. of toolholder | | $MN_MM_NUM_TOOL_CARRIER | | |

| **tcCarr4** | $TC_CARR4 | | | | |
|---|---|---|---|---|---|
| x component of offset vector l2 | | | | | |
| - | 0 | | | Double | wr |
| Multi-line: yes | No. of toolholder | | $MN_MM_NUM_TOOL_CARRIER / numToBaust | | |

| **tcCarr40** | $TC_CARR40 | | | | |
|---|---|---|---|---|---|
| Position component Z<br>Contains a position (Z component of return position).<br>It has no meaning whatsoever within the NCK, neither is it evaluated. | | | | | |
| - | 0 | | | Double | wr |
| Multi-line: yes | No. of toolholder | | $MN_MM_NUM_TOOL_CARRIER | | |

| **tcCarr41** | $TC_CARR41 | | | | |
|---|---|---|---|---|---|
| x-component of the fine offset of the offset vector l1 | | | | | |
| mm, inch, user defined | 0 | 0 | | Double | wr |
| Multi-line: yes | Number of the tool carrier | | $MN_MM_NUM_TOOL_CARRIER | | |

| **tcCarr42** | $TC_CARR42 | | | | |
|---|---|---|---|---|---|
| y-component of the fine offset of the offset vector l1 | | | | | |
| mm, inch, user defined | 0 | 0 | | Double | wr |
| Multi-line: yes | Number of the tool carrier | | $MN_MM_NUM_TOOL_CARRIER | | |

| **tcCarr43** | $TC_CARR43 | | | | |
|---|---|---|---|---|---|
| z-component of the fine offset of the offset vector l1 | | | | | |
| mm, inch, user defined | 0 | 0 | | Double | wr |
| Multi-line: yes | Number of the tool carrier | | $MN_MM_NUM_TOOL_CARRIER | | |

| **tcCarr44** | $TC_CARR44 | | | | |
|---|---|---|---|---|---|
| x-component of the fine offset of the offset vector l2 | | | | | |
| mm, inch, user defined | 0 | 0 | | Double | wr |
| Multi-line: yes | Number of the tool carrier | | $MN_MM_NUM_TOOL_CARRIER | | |

| **tcCarr45** | $TC_CARR45 | | | | |
|---|---|---|---|---|---|
| y-component of the fine offset of the offset vector l2 | | | | | |
| mm, inch, user defined | 0 | 0 | | Double | wr |
| Multi-line: yes | Number of the tool carrier | | $MN_MM_NUM_TOOL_CARRIER | | |

| **tcCarr46** | $TC_CARR46 | | | | |
|---|---|---|---|---|---|
| z-component of the fine offset of the offset vector l2 | | | | | |
| mm, inch, user defined | 0 | 0 | | Double | wr |
| Multi-line: yes | Number of the tool carrier | | $MN_MM_NUM_TOOL_CARRIER | | |

| **tcCarr5** | $TC_CARR5 | | | | |
|---|---|---|---|---|---|
| y component of offset vector l2 | | | | | |
| - | 0 | | | Double | wr |
| Multi-line: yes | No. of toolholder | | $MN_MM_NUM_TOOL_CARRIER / numToBaust | | |

© Siemens AG 2004 All Rights Reserved

| **tcCarr55** | $TC_CARR55 | | | | |
|---|---|---|---|---|---|
| x-component of the fine offset of the offset vector l3 | | | | | |
| mm, inch, user defined | 0 | 0 | | Double | wr |
| Multi-line: yes | Number of the tool carrier | | $MN_MM_NUM_TOOL_CARRIER | | |

| **tcCarr56** | $TC_CARR56 | | | | |
|---|---|---|---|---|---|
| y-component of the fine offset of the offset vector l3 | | | | | |
| mm, inch, user defined | 0 | 0 | | Double | wr |
| Multi-line: yes | Number of the tool carrier | | $MN_MM_NUM_TOOL_CARRIER | | |

| **tcCarr57** | $TC_CARR57 | | | | |
|---|---|---|---|---|---|
| z-component of the fine offset of the offset vector l3 | | | | | |
| mm, inch, user defined | 0 | 0 | | Double | wr |
| Multi-line: yes | Number of the tool carrier | | $MN_MM_NUM_TOOL_CARRIER | | |

| **tcCarr58** | $TC_CARR58 | | | | |
|---|---|---|---|---|---|
| x-component of the fine offset of the offset vector l4 | | | | | |
| mm, inch, user defined | 0 | 0 | | Double | wr |
| Multi-line: yes | Number of the tool carrier | | $MN_MM_NUM_TOOL_CARRIER | | |

| **tcCarr59** | $TC_CARR59 | | | | |
|---|---|---|---|---|---|
| y-component of the fine offset of the offset vector l4 | | | | | |
| mm, inch, user defined | 0 | 0 | | Double | wr |
| Multi-line: yes | Number of the tool carrier | | $MN_MM_NUM_TOOL_CARRIER | | |

| **tcCarr6** | $TC_CARR6 | | | | |
|---|---|---|---|---|---|
| z component of offset vector l2 | | | | | |
| - | 0 | | | Double | wr |
| Multi-line: yes | No. of toolholder | | $MN_MM_NUM_TOOL_CARRIER / numToBaust | | |

| **tcCarr60** | $TC_CARR60 | | | | |
|---|---|---|---|---|---|
| z-component of the fine offset of the offset vector l4 | | | | | |
| mm, inch, user defined | 0 | 0 | | Double | wr |
| Multi-line: yes | Number of the tool carrier | | $MN_MM_NUM_TOOL_CARRIER | | |

| **tcCarr64** | $TC_CARR64 | | | | |
|---|---|---|---|---|---|
| Fine offset of the offset of the rotary axis v1 | | | | | |
| Degree, user defined | 0 | 0 | | Double | wr |
| Multi-line: yes | Number of the tool carrier | | $MN_MM_NUM_TOOL_CARRIER | | |

| **tcCarr65** | $TC_CARR65 | | | | |
|---|---|---|---|---|---|
| Fine offset of the offset of the rotary axis v2 | | | | | |
| Degree, user defined | 0 | 0 | | Double | wr |
| Multi-line: yes | Number of the tool carrier | | $MN_MM_NUM_TOOL_CARRIER | | |

| **tcCarr7** | $TC_CARR7 | | | | |
|---|---|---|---|---|---|
| x component of rotary axis v1 | | | | | |
| - | 0 | | | Double | wr |
| Multi-line: yes | No. of toolholder | | $MN_MM_NUM_TOOL_CARRIER / numToBaust | | |

| **tcCarr8** | $TC_CARR8 | | | | |
|---|---|---|---|---|---|
| y component of rotary axis v1 | | | | | |
| - | 0 | | | Double | wr |
| Multi-line: yes | No. of toolholder | | $MN_MM_NUM_TOOL_CARRIER / numToBaust | | |

© Siemens AG 2004 All Rights Reserved

| **tcCarr9** | $TC_CARR9 | | | | |
|---|---|---|---|---|---|
| z component of rotary axis v1 | | | | | |
| - | 0 | | | Double | wr |
| Multi-line: yes | No. of toolholder | | $MN_MM_NUM_TOOL_CARRIER / numToBaust | | |

© Siemens AG 2004 All Rights Reserved

## 3.7.21 Area T, Mod. TOE: Edge-related coarse total offsets, setup offsets

**OEM-MMC: Linkitem** /Tool/Compensation/...

One set of edge-related coarse total offsets, setup offsets, exists for each tool edge and operating location.
This module corresponds totally to module T / TOS, edge-related location-dependent fine total offsets.

| **edgeECData** | $TC_ECPx[t,d] | | | | |
|---|---|---|---|---|---|
| Location-dependent offsets, setup value | | | | | |
| mm, inch, user defined | 0.0 | | | Double | wr |
| Multi-line: yes | ((EdgeNo-1) * (maxnumEdgeSC * numParams_SC)) + ((EdgeSC - 1)* numParams_SC) + ParameterNo | | numParams_SC * maxnumEdgeSC * maxnumCuttEdges_Tool | | |

© Siemens AG 2004 All Rights Reserved

## 3.7.22 Area T, Mod. TOET: Edge-related coarse total offsets, transformed setup offsets

**OEM-MMC: Linkitem** /Tool/CompTransfor/...

One set of edge-related transformed total offsets exists for each tool edge and operating location.
This module corresponds totally to module T / TOE.

| **edgeECData** | | | | | |
|---|---|---|---|---|---|
| Transformed location-dependent offsets, setup value | | | | | |
| mm, inch, user defined | 0.0 | | | Double | wr |
| Multi-line: yes | ((EdgeNo-1) * (maxnumEdgeSC * numParams_SC)) + ((EdgeSC - 1)* numParams_SC) + ParameterNo | | numParams_SC * maxnumEdgeSC * maxnumCuttEdges_Tool | | |

© Siemens AG 2004 All Rights Reserved

## 3.7.23 Area T, Mod. TOS: Edge-related location-dependent fine total offsets

**OEM-MMC: Linkitem** /Tool/Compensation/...

One set of edge-related total offsets exists for each tool edge and operating location.
The maximum number of operating locations is identical for all tool edges and defined by the new variable maxnumEdgeSC ($MN_MAX_SUMCORR_PERCUTTING_EDGE) in "N / Y global system data".
numParams_SC (currently 9) offsets are provided (depending on location-independent wear values) for each total offset set: Length 1, length 2, length 3, radius and 5 others.

Each replacement tool has its own separate (different) data.

The NCK resets the data when the associated tool is activated if machine data ($MN_MM_KIND_OF_SUMCORR, bit 1 = 1) is used for activation.

The total offsets of a tool edge are accessible via the internal T number of the associated tool, edge number, total offset number ("operating location").

PI Services may exist for selective creation and deletion of tool edge total offsets.
The existence of total offsets can be controlled selectively via the new machine data $MN_MM_NUM_SUMCORR (OPI: maxNumSumcorr in N / Y) (P5??).

The following applies:
When the MMC2 tool management function is in use,
$MN_MM_NUM_SUMCORR = -1 must be set to ensure that the total offsets exist for all offset locations (number = maxnumEdgeSC) from creation of the tool edge until its deletion.
(The new PI Services for creation / deletion will not currently be used by the MMC2 tool management for turning applications). For the present, the new NC machine data $MN_MM_NUM_SUMCORR = -1 must be set to automatic creation / deletion.

The method of addressing in this module is analogous to accessing "Edge data / offsets" by column addressing with T number (using an array access operation to gain quick access to the total offsets of all tool edge operating locations or all edges of a tool).

The module contains the location-dependent total offsets for all tools. Each element is addressed via a column and line index:

The column index is the tool number (T number), i.e. all location-dependent total offsets of this tool (for all edges / locations) can be found in one column.
If a non-existent T number is specified as the column index, the request is acknowledged negatively.
The number of lines is determined by the number of total offset values, the number of operating locations and the maximum possible edge number of a tool:
maxZeilenindex = numParams_SC * maxnumEdgeSC * maxnumCuttEdges_Tool

These variables are stored in "N / Y global system data" and have the following meanings:

© Siemens AG 2004 All Rights Reserved

numParams_SC: No. of wear offsets per location (according to L1, L2, L3, radius and 5 others), currently 9
maxnumEdgeSC: Maximum number of locations (SC) per edge
maxnumCuttEdges_Tool: Max. permissible number of edges per tool

Several lines can be addressed simultaneously if necessary, allowing, for example, all location-dependent total offsets of all edges of one tool to be read in one request. The location-dependent total offsets of the tools are all of the same data type and have the same physical unit.

Module T / TOS has a 2-dimensional organization.
For OPI, see Section OPI variables.

The following lines are provided for each T number (column index):

Edge 1, Location 1, L1
Edge 1, Location 1, L2
Edge 1, Location 1, L3
Edge 1, Location 1, Radius
Edge 1, Location 1, Par5
..... ..... .....
Edge 1, Location 1, Par numParams_SC
Edge 1, Location 2, L1
Edge 1, Location 2, L2
Edge 1, ..... .....
Edge 1, Location maxnumEdgeSC, Par numParams_SC

Edge 2, Location 1, L1
..... ..... .....
Edge 2, Location maxnumEdgeSC, Par numParams_SC
..... ..... .....
Edge maxnumCuttEdges_Tool, Location maxnumEdgeSC, Par numParams_SC

Interrelationship between edge parameters, total offsets and variables:

| Edge parameter | DL1 | DL2 | ... | DL4 |
|---|---|---|---|---|
| ... | | | | |
| $TC_DP3 | $TC_SCP13 | $TC_SCP23 | ... | |
| $TC_SCP43 | ... | | | |
| $TC_DP4 | $TC_SCP14 | $TC_SCP24 | ... | |
| $TC_SCP44 | ... | | | |
| $TC_DP5 | $TC_SCP15 | $TC_SCP25 | ... | |
| $TC_SCP45 | ... | | | |
| .... | | | | |
| $TC_DP9 | $TC_SCP19 | $TC_SCP29 | ... | |
| $TC_SCP49 | ... | | | |
| $TC_DP10 | $TC_SCP20 | $TC_SCP30 | ... | |
| $TC_SCP50 | ... | | | |
| $TC_DP11 | $TC_SCP21 | $TC_SCP31 | ... | |
| $TC_SCP51 | ... | | | |

with DLx, TC_DPy, TC_SCPz
x from 1 to 6 (maxnumEdgeSC = $MN_MAX_SUMCORR_PERCUTTING_EDGE) and maximum = 6
y from 3 to 11
z = (10 * x) + y

© Siemens AG 2004 All Rights Reserved

| **edgeSCData** | $TC_SCPx[t,d] | | | | |
|---|---|---|---|---|---|
| Location-dependent offsets, wear | | | | | |
| mm, inch, user defined | 0.0 | | | Double | wr |
| Multi-line: yes | ((EdgeNo-1) * (maxnumEdgeSC * numParams_SC)) + ((EdgeSC - 1)* numParams_SC) + ParameterNo | | numParams_SC * maxnumEdgeSC * maxnumCuttEdges_Tool | | |

© Siemens AG 2004 All Rights Reserved

## 3.7.24 Area T, Mod. TOST: Edge-related location-dependent fine total offsets, transformed

**OEM-MMC: Linkitem** /Tool/CompTransfor/...

One set of edge-related transformed total offsets exists for each tool edge and operating location.
This module corresponds totally to module T / TOS.

| **edgeSCData** | | | | | |
|---|---|---|---|---|---|
| Transformed location-dependent offsets, wear | | | | | |
| mm, inch, user defined | 0.0 | | | Double | wr |
| Multi-line: yes | ((EdgeNo-1) * (maxnumEdgeSC * numParams_SC)) + ((EdgeSC - 1)* numParams_SC) + ParameterNo | | numParams_SC * maxnumEdgeSC * maxnumCuttEdges_Tool | | |

© Siemens AG 2004 All Rights Reserved

## 3.7.25 Area T, Mod. TOT: Edge data: Transformed offset data

**OEM-MMC: Linkitem** /Tool/CompTransfor/...

The MMC must be capable of displaying and modifying the offset data of the tool edges as both transformed and untransformed data. The transformation refers to the adapter data (if programmed) of magazine locations. The MMC can display and modify both transformed and untransformed data (of the same tool if necessary) "simultaneously" (in different applications or different MMCs).

To provide access to transformed data, a new module, T / TOT (edge data: transformed offset data), is provided which is identical to the existing module T / TO (edge data: Offset data), except that it supplies transformed data instead of untransformed data.
The information edge DNo (D numbers assigned to edges) is included under the offset (numCuttEdgeParams * maxnumCuttEdges_Tool) in both the T / TOT and T / TO modules.
Both modules have a 2-dimensional organization.

The T number is the column index.
Line numbers are calculated by the following method:
(EdgeNo -1) * numCuttEdgeParams +parameter No.

numCuttEdgeParams = parameter per edge (currently 25) (from Y in N area)
EdgeNo = edge number for tool

Example: with numCuttEdgeParams = 25 and maxnumCuttEdges_Tool = 9

Column: T number
Lines:

| | | |
|---|---|---|
| 1 | edge 1, | parameter 1 |
| 2 | edge 1, | parameter 2 |
| | ... | |
| 25 | edge 1, | parameter numCuttEdgeParams |
| 26 | edge 2, | parameter 1 |
| 27 | edge 2, | parameter 2 |
| | ... | |
| 50 | edge 2, | parameter numCuttEdgeParams |
| ... | | |
| 225 | edge maxnumCuttEdges_Tool, | parameter numCuttEdgeParams |
| 226 | edge 1, | D No assigned to edge 1 |

Untransformed data:
/Tool/Compensation/edgeData[uToa,cTNr,line_from,line_to]
Transformed data:
/Tool/CompTransfor/edgeData[uToa,cTNr,line_from,line_to]

Values which can be displayed as transformed data are the 9 geo-data (corresponding to L1, L2, L3, radius, and generally 5 other values), wear and total offsets.

If tools which are not located in a magazine location with adapter data are accessed via the module for transformed data, then the data are treated as if they were untransformed.

For OPI, see Section OPI variables.

© Siemens AG 2004 All Rights Reserved

| **cuttEdgeParam** | | | | | |
|---|---|---|---|---|---|
| Transformed edge offset data and D number list<br>Important: This variable is called "edgeData" in the MMC102. | | | | | |
| mm, inch, user defined | 0.0 | | | Double | wr |
| Multi-line: yes | For edge offset value parameters:<br>(edgeNo - 1) *<br>numCuttEdgeParams +<br>ParameterNo<br>For D numbers:<br>((numCuttEdgeParams *<br>maxnumCuttEdges_Tool) +<br>EdgeNo) | | (numCuttEdgeParams + 1) *<br>maxnumCuttEdges_Tool | | |

| **edgeData** | | | | | |
|---|---|---|---|---|---|
| Transformed edge offset data and D number list<br>Important: This variable is called "cuttEdgeParam" in NonWindows MMC and PLC. | | | | | |
| mm, inch, user defined | 0.0 | | | Double | wr |
| Multi-line: yes | For edge offset value parameters:<br>(edgeNo - 1) *<br>numCuttEdgeParams +<br>ParameterNo<br>For D numbers:<br>((numCuttEdgeParams *<br>maxnumCuttEdges_Tool) +<br>EdgeNo) | | (numCuttEdgeParams + 1) *<br>maxnumCuttEdges_Tool | | |

© Siemens AG 2004 All Rights Reserved

## 3.7.26 Area T, Mod. TAD: Application-specific data

**OEM-MMC: Linkitem** /Tool//...

Data module TAD is organized as a 2-dimensional variable array. This module contains application-specific data for all tools. Every element can be addressed via a column and row index:

The column index is the number of the user-defined tool parameter. The number of tool parameters (columns) can be found in variable numToolParams_tad in area N / module Y.

The row index is the tool number. Attempts to access non-existent tools are negatively acknowledged.

Application-specific tool data are all of the same data type.

Application-specific tool data are reserved for SIEMENS applications.

| **siemData** | $TC_TPCSx[y] | | | | |
|---|---|---|---|---|---|
| Siemens application tool parameter<br>Important: 2-dimensional variable. Column index corresponds to parameter number. Reserved for SIEMENS applications. | | | | | |
| - | 0 | | | Double | wr |
| Multi-line: yes | Tool number T | | 32000 | | |

© Siemens AG 2004 All Rights Reserved

## 3.7.27 Area T, Mod. TAM: Application-specific magazine data

**OEM-MMC: Linkitem** /Tool//...

Module TAM contains application-specific information about tool magazines.

Application-specific magazine data are all of the same data type.

The application-specific magazine data are reserved for SIEMENS applications.

| **siemData** | $TC_MAPCSx[y] | | | | |
|---|---|---|---|---|---|
| Siemens application magazine data.<br>These parameters can be used only if machine data<br>$MN_MM_NUM_CCS_MAGAZINE_PARAM and $MN_MM_TOOL_MANAGEMENT_MASK are set accordingly.<br>Reserved for SIEMENS applications. | | | | | |
| - | 0 | | | UWord | wr |
| Multi-line: yes | Parameter number | | numMagParams_tam | | |

© Siemens AG 2004 All Rights Reserved

## 3.7.28 Area T, Mod. TAO: Application-specific cutting edge data

**OEM-MMC: Linkitem** /Tool//...

Data module TAO is organized as a 2-dimensional variable array. This module contains application-specific cutting edge data for all tools. Every element can be addressed via a column and row index. The column index is the tool number (T number), i.e. one column contains the application-specific data for all the cutting edges of a tool.
The assignments between tools and T numbers are listed in the Tool Directory (TV) module in the relevant T area. A request is negatively acknowledged if a non-existent tool number is entered as the column index.

The number of rows is determined by the number of parameters per cutting edge and the number of cutting edges of a tool:

Max. number of rows = numCuttEdgeParams_tao * /T/TV/numCuttEdges (T number)

The number of parameters per cutting edge numCuttEdgeParams_tao can be found in area N / module Y. The number of tool-specific cutting edges is specified in area T / module TV.
Several rows can be addressed where necessary which means, for example, that all application-specific edge data of a tool can be read in one request.

Application-specific edge data are all of the same data type.

Application-specific cutting edge data are reserved for SIEMENS applications.

| **siemEdgeData** | $TC_DPCSx[y,z] | | | | |
|---|---|---|---|---|---|
| Siemens application tool cutting edge parameter<br>Important: 2-dimensional variable. Column index corresponds to the T number. Reserved for SIEMENS applications. | | | | | |
| - | 0 | | | Double | wr |
| Multi-line: yes | (EdgeNo-1) * numCuttEdgeParams_tao + ParameterNo | | numCuttEdgeParams_tao * /T/TV/numCuttEdges | | |

© Siemens AG 2004 All Rights Reserved

## 3.7.29 Area T, Mod. TAP: Application-specific magazine location data

**OEM-MMC: Linkitem** /Tool//...

Data module TAP is organized as a 2-dimensional variable array. This module contains application-specific data of a T area. Every element can be addressed via a column and row index:

The column index is the magazine number, i.e. one column contains the application-specific magazine location data for all the locations of one magazine. The assignments between magazines and magazine numbers are listed in the appropriate Magazine Directory (TMV) module in the relevant T area. A request is negatively acknowledged if a non-existent magazine number is entered as the column index.

The number of rows is determined by the number of parameters per magazine location and the number of magazine locations:

Max. number of rows = numMagLocParams_tap * magNrPlaces

Application-specific magazine location data are all of the same data type.

Application-specific magazine location data are reserved for SIEMENS applications.

| **siemPlaceData** | $TC_MPPCSx[y,z] | | | | |
|---|---|---|---|---|---|
| Siemens application magazine location data.<br>These parameters can be used only if machine data $MN_MM_NUM_CCS_MAGLOC_PARAM and $MN_MM_TOOL_MANAGEMENT_MASK are set accordingly.<br>Reserved for SIEMENS applications. | | | | | |
| - | 0 | | | UWord | wr |
| Multi-line: yes | ParameterNumber + numMagLocParams_tap * MagazineLocationNumber-1 | | numMagLocParams_tap * magNrPlaces | | |

© Siemens AG 2004 All Rights Reserved

## 3.7.30 Area T, Mod. TAS: Application-specific monitoring data

**OEM-MMC: Linkitem** /Tool//...

Data module TAS is organized as a 2-dimensional variable array. This module contains application-specific monitoring data for all tools. Every element can be addressed via a column and row index:

The column index is the tool number (T number), i.e. one column contains the application-specific monitoring data for all the cutting edges of a tool. The assignments between tools and T numbers are listed in the Tool Directory (TV) module in the relevant T area. A request is negatively acknowledged if a non-existent tool number is entered as the column index.

The number of rows is determined by the number of parameters per cutting edge and the number of cutting edges of a tool:

Max. number of rows = numCuttEdgeParams_tas * /T/TV/numCuttEdges (T number)

The number of parameters per cutting edge numCuttEdgeParams_tas can be found in area N / module Y. The number of tool-specific cutting edges (/T/TV/numCuttEdges) is specified in area T / module TV.
Several rows can be addressed where necessary which means, for example, that all application-specific monitoring data of a tool can be read in one request.

Application-specific monitoring data are all of the same data type.

Application-specific monitoring data are reserved for SIEMENS applications.

| **siemData** | $TC_MOPCSx[y,z] | | | | |
|---|---|---|---|---|---|
| Siemens application monitoring data of a tool cutting edge.<br>These parameters can be used only if machine data<br>$MN_MM_NUM_CCS_MON_PARAM and $MN_MM_TOOL_MANAGEMENT_MASK are set accordingly.<br>Reserved for SIEMENS applications. | | | | | |
| - | 0 | | | Double | wr |
| Multi-line: yes | ParameterNumber + (EdgeNo -1) * numCuttEdgeParams_tas | | numCuttEdgeParams_tas * /T/TV/numCuttEdges | | |

© Siemens AG 2004 All Rights Reserved

# 3.8 Machine and setting data

## 3.8.1 Area N, Mod. M: Global machine data

**OEM-MMC: Linkitem** /Nck/Drive/...

Global machine data

| **MDBA_DRIVE_IS_ACTIVE** | MD 13000: DRIVE_IS_ACTIVE[x] x = PlugplaceNo | | | | |
|---|---|---|---|---|---|
| Activation of 611D drive / enable high-speed inputs/outputs<br>0 = inactive<br>1 = active | | | | | |
| - | | | | Character | wr |
| Multi-line: yes | Slot number in drive bus | | 14 | | |

| **MDCA_DRIVE_LOGIC_NR** | MD 13010: DRIVE_LOGIC_NR[x] x = PlugplaceNo | | | | |
|---|---|---|---|---|---|
| Logical drive number | | | | | |
| - | | 0 | 30 | Character | wr |
| Multi-line: yes | Slot number in drive bus | | 14 | | |

| **MDCA_DRIVE_MODULE_TYPE** | MD 13030: DRIVE_MODULE_TYPE[x] x = PlugplaceNo | | | | |
|---|---|---|---|---|---|
| Module identifier of relevant drive bus slot<br>1 = single-axis module<br>2 = two-axis module<br>9 = terminal block for dig. I/Os<br>10 = bit bus interface | | | | | |
| - | | | | Character | wr |
| Multi-line: yes | Slot number in drive bus | | 14 | | |

| **MDCA_DRIVE_TYPE** | MD 13040: DRIVE_TYPE[x] x = PlugplaceNo | | | | |
|---|---|---|---|---|---|
| Drive type identifier for each drive bus slot<br>1 = FDD<br>2 = MSD | | | | | |
| - | | | | Character | wr |
| Multi-line: yes | Slot number in drive bus | | 14 | | |

| **MDD_INT_INCR_PER_DEG** | MD 10210: INT_INCR_PER_DEG | | | | |
|---|---|---|---|---|---|
| Calculation resolution for angular position | | | | | |
| - | | 0,000001 | 1000 | Double | wr |
| Multi-line: no | | | 1 | | |

| **MDD_INT_INCR_PER_MM** | MD 10200: INT_INCR_PER_MM | | | | |
|---|---|---|---|---|---|
| Calculation resolution for linear positions | | | | | |
| - | | 0,000001 | 1000 | Double | wr |
| Multi-line: no | | | 1 | | |

| **MDD_SYSCLOCK_CYCLE_TIME** | MD 10050: SYSCLOCK_CYCLE_TIME | | | | |
|---|---|---|---|---|---|
| Basic system clock cycle. For possible assignment of values, see description of machine data SYSCLOCK_CYCLE_TIME. | | | | | |
| s | | 0,000125 s | 0,032 s | Double | wr |
| Multi-line: no | | | 1 | | |

© Siemens AG 2004 All Rights Reserved

| **MDL_POSCTRL_SYSCLOCK_TIME_RATIO** | MD 10060: POSCTRL_SYSCLOCK_TIME_RATIO | | | | |
|---|---|---|---|---|---|
| Position control cycle factor | | | | | |
| - | | 1 | 100 | Long Integer | wr |
| Multi-line: no | | | 1 | | |

| **MDLA_DRIVE_INVERTER_CODE** | MD 13020: DRIVE_INVERTER_CODE[x] x = PlugplaceNo | | | | |
|---|---|---|---|---|---|
| Power section code of drive module | | | | | |
| - | | | | Long Integer | wr |
| Multi-line: yes | Slot number of drive module | | 14 | | |

| **MDSA_AXCONF_MACHAX_NAME_TAB** | MD 10000: AXCONF_MACHAX_NAME_TAB[x] x = Axis | | | | |
|---|---|---|---|---|---|
| Machine axis name | | | | | |
| - | | | | String[16] | wr |
| Multi-line: yes | Axis index from 0 | | 7 | | |

© Siemens AG 2004 All Rights Reserved

## 3.8.2 Area A, Mod. M: Axis-specific machine data

**OEM-MMC: Linkitem** /Axis/Drive/...

Axis-specific machine data

| **MDCA_CTRLOUT_MODULE_NR** | MD 30110: CTRLOUT_MODULE_NR | | | | |
|---|---|---|---|---|---|
| Setpoint assignment: Drive number / module number | | | | | |
| - | | 1 | 15 | Character | wr |
| Multi-line: no | | | 1 | | |

| **MDCA_CTRLOUT_TYPE** | MD 30130: CTRLOUT_TYPE | | | | |
|---|---|---|---|---|---|
| Type of setpoint output | | | | | |
| - | | 0 | 1 | Character | wr |
| Multi-line: no | | | 1 | | |

| **MDCA_ENC_MODULE_NR** | MD 30220: ENC_MODULE_NR[x] x = PlugplaceNo | | | | |
|---|---|---|---|---|---|
| Actual value assignment: Drive number / measuring circuit number | | | | | |
| - | | 1 | 15 | Byte | wr |
| Multi-line: yes | Encoder number | | 2 | | |

| **MDCA_ENC_TYPE** | MD 30240: ENC_TYPE[x] x = PlugplaceNo | | | | |
|---|---|---|---|---|---|
| Type of actual value sensing (actual position value)<br>0 = Simulation<br>1 = Raw signal generator, high-resolution<br>2 = Square-wave generator, standard generator with pulse quadruplication<br>3 = Encoder for stepper motor<br>4 = Absolute encoder with EnDat interface<br>5 = Absolute encoder with SSI interface (FM-NC) | | | | | |
| - | | 0 | 5 | Character | wr |
| Multi-line: yes | Encoder number | | 2 | | |

© Siemens AG 2004 All Rights Reserved

## 3.8.3 Area N, Mod. SE: Global setting data

**OEM-MMC: Linkitem** /Nck/Settings/...

This module contains all global setting data. The physical units depend on the variable "userScale" in module Y of area N.

| **MDB_JOG_CONT_MODE_LEVELTRIGGRD** | SD 41050: $SN_MDB_JOG_CONT_MODE_LEVELTRIGGRD | | | | |
|---|---|---|---|---|---|
| Jog mode | | | | | |
| - | | | | Character | wr |
| Multi-line: no | | | | | |

| **MDB_JOG_REV_IS_ACTIVE** | SD 41100: $SN_MDB_JOG_REV_IS_ACTIVE | | | | |
|---|---|---|---|---|---|
| JOG at revolutional feedrate<br>0 = G94<br>1 = G95 | | | | | |
| - | | | | Character | wr |
| Multi-line: no | | | | | |

| **MDD_JOG_REV_SET_VELO** | SD 41120: $SN_MDD_JOG_REV_SET_VELO | | | | |
|---|---|---|---|---|---|
| JOG velocity for G95 | | | | | |
| Degree, user defined | | | | Double | wr |
| Multi-line: no | | | | | |

| **MDD_JOG_SET_VELO** | SD 41110: $SN_MDD_JOG_SET_VELO | | | | |
|---|---|---|---|---|---|
| JOG velocity for G94 | | | | | |
| mm, inch, user defined | | | | Double | wr |
| Multi-line: no | | | | | |

| **MDD_JOG_SPIND_SET_VELO** | SD 41200: $SN_MDD_JOG_SPIND_SET_VELO | | | | |
|---|---|---|---|---|---|
| JOG velocity for master spindle | | | | | |
| rev/min, user defined | | | | Double | wr |
| Multi-line: no | | | | | |

| **MDD_JOG_VAR_INCR_SIZE** | SD 41010: $SN_MDD_JOG_VAR_INCR_SIZE | | | | |
|---|---|---|---|---|---|
| Variable incremental value for JOG mode | | | | | |
| - | | | | Double | wr |
| Multi-line: no | | | | | |

© Siemens AG 2004 All Rights Reserved

## 3.8.4 Area C, Mod. SE: Channel-specific setting data

**OEM-MMC: Linkitem** /Channel/Settings/...

Channel-specific setting data

| **MDD_DRY_RUN_FEED** | SD 42100: $SC_MDD_DRY_RUN_FEED | | | | |
|---|---|---|---|---|---|
| Dry run feedrate | | | | | |
| mm/min, inch/min, user defined | | | | Double | wr |
| Multi-line: no | | | | | |

| **MDD_THREAD_START_ANGLE** | SD 42000: $SC_MDD_THREAD_START_ANGLE | | | | |
|---|---|---|---|---|---|
| Starting angle for thread | | | | | |
| Degree | | | | Double | wr |
| Multi-line: no | | | | | |

© Siemens AG 2004 All Rights Reserved

## 3.8.5 Area A, Mod. SE: Axis-specific setting data

**OEM-MMC: Linkitem** /Axis/Settings/...

Axis-specific setting data

| **AA_OFF_LIMIT** | SD 43350: $SA_AA_OFF_LIMIT | | | | |
|---|---|---|---|---|---|
| Upper limit of compensation value which can be preset by means of synchronized actions via the system variable $AA_OFF.<br>This limit value acts on the absolutely effective compensation value via $AA_OFF.<br>It is possible to interrogate the compensation value for limit-range violation via the system variable $AA_OFF_LIMIT. | | | | | |
| - | | | | Double | r |
| Multi-line: no | | | | | |

| **MDB_WORKAREA_MINUS_ENABLE** | SD 43410: $SA_MDB_WORKAREA_MINUS_ENABLE | | | | |
|---|---|---|---|---|---|
| Working area limitation active in the negative direction<br>0 = inactive<br>1 = active | | | | | |
| - | | | | Character | wr |
| Multi-line: yes | Number of machine axis | | 1 | | |

| **MDB_WORKAREA_PLUS_ENABLE** | SD 43400: $SA_MDB_WORKAREA_PLUS_ENABLE | | | | |
|---|---|---|---|---|---|
| Working area limitation active in the positive direction<br>0 = inactive<br>1 = active | | | | | |
| - | | | | Character | wr |
| Multi-line: yes | Number of machine axis | | 1 | | |

| **MDD_SPIND_MAX_VELO_G26** | SD 43220: $SA_MDD_SPIND_MAX_VELO_G26 | | | | |
|---|---|---|---|---|---|
| Maximum spindle speed at G26 (master spindle) | | | | | |
| rev/min, user defined | | | | Double | wr |
| Multi-line: no | | | 1 | | |

| **MDD_SPIND_MAX_VELO_LIMS** | SD 43230: $SA_MDD_SPIND_MAX_VELO_LIMS | | | | |
|---|---|---|---|---|---|
| Spindle speed limitation (master spindle) | | | | | |
| rev/min, user defined | | | | Double | wr |
| Multi-line: no | | | 1 | | |

| **MDD_SPIND_MIN_VELO_G25** | SD 43210: $SA_MDD_SPIND_MIN_VELO_G25 | | | | |
|---|---|---|---|---|---|
| Minimum spindle speed at G25 (master spindle) | | | | | |
| rev/min, user defined | | | | Double | wr |
| Multi-line: no | | | 1 | | |

| **MDD_WORKAREA_LIMIT_MINUS** | SD 43430: $SA_MDD_WORKAREA_LIMIT_MINUS | | | | |
|---|---|---|---|---|---|
| Working area limitation in the negative direction | | | | | |
| mm, inch, user defined | | | | Double | wr |
| Multi-line: yes | Number of machine axis | | 1 | | |

© Siemens AG 2004 All Rights Reserved

| **MDD_WORKAREA_LIMIT_PLUS** | SD 43420: $SA_MDD_WORKAREA_LIMIT_PLUS | | | | |
|---|---|---|---|---|---|
| Working area limitation in the positive direction | | | | | |
| mm, inch, user defined | | | | Double | wr |
| Multi-line: yes | Number of machine axis | | 1 | | |

© Siemens AG 2004 All Rights Reserved

# 3.9 Parameters

## 3.9.1 Area C, Mod. RP: Arithmetic parameters

**OEM-MMC: Linkitem** /Channel/Parameter/...

Arithmetic parameters are special predefined variables which are addressed with the letter R followed by a number. The contents and meaning of an arithmetic parameter are defined by the programmer of the NC program. 100 R parameters are defined by default. The number of R parameters can be set via the channel-specific machine data 28050 (MM_NUM_R_PARAM). Up to 1000 R-Parameters can be set.

| **R** | $R[x] x = ParameterNo | | | | PA |
|---|---|---|---|---|---|
| R parameter (up to SW 3.2)<br><br>Attention: This variable should be used for SW releases < 3.3. For later releases use the variable rpa !<br><br>Attention: For MMC102 the R number is used as row index !!! | | | | | |
| - | | | | Double | wr |
| Multi-line: yes | R number | | MM_NUM_R_PARAM | | |

| **rpa** | R[x] x = ParameterNo | | | | PA |
|---|---|---|---|---|---|
| R parameter (from SW 3.3)<br><br>Attention: For MMC102 the R number is used as row index !!! | | | | | |
| - | | | | Double | wr |
| Multi-line: yes | R number + 1 | | MM_NUM_R_PARAM + 1 | | |

© Siemens AG 2004 All Rights Reserved

## 3.9.2 Area C, Mod. VSYN: Channel-specific user variables for synchronous actions

**OEM-MMC: Linkitem** /Channel/SelectedFunctionData/...

This module contains channel-specific user variables for synchronous actions

| **acFifoN** | $AC_FIFOx[y] , x = FIFONo (1-10) y = ParameterNo | | | |
|---|---|---|---|---|
| FIFO variable for synchronous actions (Note: SYNACT only)<br>The number of columns depends on the number of FIFOs | | | | |
| - | | | Double | r |
| Multi-line: yes | 1=2: access to the first element read in<br>3: access to the last element read in<br>4: sum of all FIFO elements<br>5: number of elements available in FIFO<br>6: current write index in relation to start of FIFO<br>7 etc: FIFO contents | | MD $MC_MM_LEN_AC_FIFO+6 | |

| **acMarker** | $AC_MARKER[x] x = MarkerNo | | | |
|---|---|---|---|---|
| Flag variable, counter for synchronous actions (Note: SYNACT only) | | | | |
| - | | | UWord | r |
| Multi-line: yes | Number of the flag | | MD $MC_MM_NUM_AC_MARKER | |

| **acMarkerL** | $AC_MARKER[n] | | | |
|---|---|---|---|---|
| Flag variable, counter for motion synchronous actions<br>(Note: only with SYNACT) | | | | |
| - | | | UDoubleword | r |
| Multi-line: yes | Flag number | | MD $MC_MM_NUM_AC_MARKER | |

| **acParam** | $AC_PARAM[x] x = ParameterNo | | | |
|---|---|---|---|---|
| Dynamic parameters for synchronous actions (Note: SYNACT only) | | | | |
| - | | | Double | r |
| Multi-line: yes | Number of the parameter | | MD $MC_MM_NUM_AC_PARAM | |

© Siemens AG 2004 All Rights Reserved

# 3.10 Servo

## 3.10.1 Area N, Mod. SD: Servo data

**OEM-MMC: Linkitem** /Nck/ServoData/...

The SD module makes servo data available.
These data can be accessed only via the cyc. variable service and the logging function (not individual variable service).

The row index is coded as follows:
The lower three places contain the NCK axis index
The fourth place contains the data format.

The column index is coded as follows:
The lower three places contain the signal ID
The fourth place contains the servo cycle

Data format coding:
0: 32 bit float
1: 64 bit float

Servo cycle coding:
0: The average value of all servo cycle values of one IPO cycle must be applied
61: The minimum value must be applied
62: The maximum value must be applied
n: The value of the nth servo cycle in the course of one IPO cycle must be applied
Maximum value of: IPO_SYSCLOCK_TIME_RATIO / POSCTRL_SYSCLOCK_TIME_RATIO
( 1 <=n <=60 )

Coding of signal ID:
1: Following error
2: Control deviation
3: Contour deviation
4: Actual position value, measuring system 1
5: Actual position value, measuring system 2
6: Position setpoint
7: Actual velocity value of active encoders (NCK)
8: Drive velocity setpoint (NCK)
9: Compensation value, measuring system 1
10: Compensation value, measuring system 2
11: Controller mode
12: Parameter set
13: Active measuring system
14: Position setpoint at controller input
15: Velocity setpoint at controller input
16: Acceleration setpoint at controller input
17: Velocity feedforward value (plus QEC)
18: Torque/force feedforward value
19: Torque/force limit value
20: Actual velocity, measuring system 1
21: Actual velocity, measuring system 2
22: Interpolation ended signal
23: Exact stop fine signal
24: Exact stop coarse signal

© Siemens AG 2004 All Rights Reserved

25: QEC learning criterion
26: QEC compensation value
50: Utilization
51: Active power
52: Torque/force setpoint
53: Actual current value (smoothed)
54: Actual speed/velocity motor
55: Valve lift setpoint
56: Actual valve lift
57: Actual pressure cylinder A end
58: Actual pressure cylinder B end
60: Safe actual position
61: Safe actual drive position
62: Safety-relevant input signal NCK
63: Safety-relevant output signal NCK
64: Safety-relevant input signal drive (from PLC)
65: Safety-relevant output signal drive (from PLC)
66: Reaction identifier for NCK
67: Reaction identifier for NCK/drive
68: Result list 1 NCK
69: Result list 1 drive
70: Result list 2 NCK
71: Result list 2 drive
72: Safety partial actual value
73: Actual velocity limit
74: Setpoint velocity limit
75: SI actual value difference
76: Current SI slip speed
77: Current SBR limit

| **servoDataFI32** | | | | | |
|---|---|---|---|---|---|
| Servo data | | | | | |
| - | 0 | | | Float | r |
| Multi-line: yes | Axis index / data format (see module header) | | siehe Bausteinkopf | | |

| **servoDataFI64** | | | | | |
|---|---|---|---|---|---|
| Servo data | | | | | |
| - | 0 | | | Double | r |
| Multi-line: yes | Axis index / data format (see module header) | | siehe Bausteinkopf | | |

© Siemens AG 2004 All Rights Reserved

# 3.11 Diagnosis data

## 3.11.1 Area N, Mod. DIAGN: Global diagnostic data

**OEM-MMC: Linkitem** /Nck/ChannelDiagnose/...

This module contains information about global NC diagnostic data.
The measured time variables are available on the destination hardware only.
The net time is calculated without interrupts by higher priority time levels, the gross time includes the interrupts.
The highest priority time level is the SERVO, followed by the IPO and finally the interpreter/ preparation. To obtain useful minimum and maximum time intervals, the corresponding variables must be initialized before the measurement.

| **actCycleTimeBrut** | | | | | |
|---|---|---|---|---|---|
| Sum of current gross runtimes of all channels | | | | | |
| ms | 0 | 0 | | Double | r |
| Multi-line: yes | Selects a specific SW task on the NCK:<br>Line index 1: SERVO<br>Line index 2: IPO<br>Line index 3: VL<br>Line index 4: PLC<br>Line index 5: SYNACT (from SW 7.1) | | 4 | | |

| **actCycleTimeNet** | | | | | |
|---|---|---|---|---|---|
| Sum of current net runtimes of all channels | | | | | |
| ms | 0 | 0 | | Double | r |
| Multi-line: yes | Selects a specific SW task on the NCK:<br>Line index 1: SERVO<br>Line index 2: IPO<br>Line index 3: VL<br>Line index 4: PLC<br>Line index 5: SYNACT (from SW 7.1) | | 4 | | |

| **compressAbility** | | | | | |
|---|---|---|---|---|---|
| Describes whether the NCK supports the transfer of compressed files<br>Bit0=1: With Huffman algorithm compressed files can be transferred<br>(this corresponds to instruction ";$COMPR=HUFFMAN1" during download) | | | | | |
| - | 0 | 0 | | UWord | r |
| Multi-line: yes | 1 | | 1 | | |

| **dp611USpecAccChangeCnt** | | | | | |
|---|---|---|---|---|---|
| The counter is incremented if the NCK changes the available ACC information | | | | | |
| - | 0 | | | UDoubleword | r |
| Multi-line: no | | | 1 | | |

© Siemens AG 2004 All Rights Reserved

| **dp611USpecAccKey** | | | | | |
|---|---|---|---|---|---|
| Version and type information about available ACC contents | | | | | |
| - | 0 | | | UDoubleword | r |
| Multi-line: no | | | maxnumDrives | | |

| **dp611USpecAccMask** | | | | | |
|---|---|---|---|---|---|
| Bit-coded screenform indicating the drives for which special ACC files are available<br><br>Bit 0 == 1 -> A special ACC is available<br>for drive with log. drive number 1. | | | | | |
| - | 0 | | | UDoubleword | r |
| Multi-line: no | | | 1 | | |

| **dp611USpecAccPath** | | | | | |
|---|---|---|---|---|---|
| Path in which the ACC files are stored in the NCK file system.<br>This path might be empty later on if the files are to<br>be supplied from the active file system.<br>Current equivalent value: /_N_VS_DIR | | | | | |
| - | 0 | | | String[32] | r |
| Multi-line: no | | | | | |

| **dpAxisCfgMachAxisNr** | | | | | |
|---|---|---|---|---|---|
| Machine axis !!CAUTION NCU LINK!! | | | | | |
| - | 0 | 0 | INT32_MAX | UDoubleword | r |
| Multi-line: no | | | dpAxisCfgNumAxes | | |

| **dpAxisCfgNumAxes** | | | | | |
|---|---|---|---|---|---|
| Number of axes entered in the system | | | | | |
| - | 0 | 0 | INT32_MAX | UDoubleword | r |
| Multi-line: no | | | 1 | | |

| **dpAxisCfgValid** | | | | | |
|---|---|---|---|---|---|
| Axis info is available<br>0=Information is not available<br>1=Information is available | | | | | |
| - | 0 | 0 | 1 | UDoubleword | r |
| Multi-line: no | | | 1 | | |

| **dpAxisStateCtrlout** | | | | | |
|---|---|---|---|---|---|
| Status of output drivers.<br>0=no axis status assigned<br>1=axis status assigned<br>2=axis status is cyclical<br>3=axis status assigned and cyclical | | | | | |
| - | 0 | 0 | 3 | UWord | r |
| Multi-line: no | | | dpAxisCfgNumAxes | | |

| **dpAxisStateEnc1** | | | | | |
|---|---|---|---|---|---|
| Status encoder 1 driver<br>0=no axis status assigned<br>1=axis status assigned<br>2=axis status is cyclical<br>3=axis status assigned and cyclical | | | | | |
| - | 0 | | | UWord | r |
| Multi-line: no | | | dpAxisCfgNumAxes | | |

© Siemens AG 2004 All Rights Reserved

| **dpAxisStateEnc2** | | | | | |
|---|---|---|---|---|---|
| Status encoder 2 driver<br>0=no axis status assigned<br>1=axis status assigned<br>2=axis status is cyclical<br>3=axis status assigned and cyclical | | | | | |
| - | 0 | | | UWord | r |
| Multi-line: no | | | dpAxisCfgNumAxes | | |

| **dpAxisStateLifeCntErrCtrlout** | | | | | |
|---|---|---|---|---|---|
| This data counts the number of position control cycles<br>since failure of the sign-of-life signal<br>0 to n= number of position control cycles since<br>failure of the sign-of-life signal | | | | | |
| - | 0 | 0 | INT32_MAX | UDoubleword | r |
| Multi-line: no | | | dpAxisCfgNumAxes | | |

| **dpAxisStateLifeCntErrEnc1** | | | | | |
|---|---|---|---|---|---|
| This data counts the number of position control cycles since<br>failure of the sign-of-life signal<br>0 to n= number of position control cycles since<br>failure of the sign-of-life signal | | | | | |
| - | 0 | | | UDoubleword | r |
| Multi-line: no | | | dpAxisCfgNumAxes | | |

| **dpAxisStateLifeCntErrEnc2** | | | | | |
|---|---|---|---|---|---|
| This data counters the number of position control cycles since<br>failure of the sign-of-life signal<br>0 to n= number of position control cycles since<br>failure of the sign-of-life signal | | | | | |
| - | 0 | | | UDoubleword | r |
| Multi-line: no | | | dpAxisCfgNumAxes | | |

| **dpBusCfgBaudrate** | | | | | |
|---|---|---|---|---|---|
| Baud rate on DP bus (bit/s)<br>The permissible baud rates are determined by<br>the Profibus standard (DIN19245 EN50170) | | | | | |
| Hz | 0 | | | Double | r |
| Multi-line: no | | | dpBusCfgNumBuses | | |

| **dpBusCfgCycleTime** | | | | | |
|---|---|---|---|---|---|
| The time required by the master to scan all<br>slaves once (request, response), until the<br>cycle starts from the beginning again. | | | | | |
| s, user defined | 0 | 0 | DOUBLE_MAX | Double | r |
| Multi-line: no | | | dpBusCfgNumBuses | | |

| **dpBusCfgDataExTime** | | | | | |
|---|---|---|---|---|---|
| Data exchange time in [s,s,userdef] | | | | | |
| s, user defined | 0 | 0 | DOUBLE_MAX | Double | r |
| Multi-line: no | | | dpBusCfgNumBuses | | |

| **dpBusCfgNumBuses** | | | | | |
|---|---|---|---|---|---|
| Number of DP buses<br>Currently only one bus standardized acc. to Profibus DP standard | | | | | |
| - | 0 | 0 | 1 | UDoubleword | r |
| Multi-line: no | | | 1 | | |

© Siemens AG 2004 All Rights Reserved

| **dpBusCfgValid** | | | | | |
|---|---|---|---|---|---|
| Bus configuration data are available<br>TRUE= data exist and are initialized<br>FALSE= no data exist | | | | | |
| - | 0 | 0 | 1 | UDoubleword | r |
| Multi-line: no | | | 1 | | |

| **dpBusStateAccessDuration Act** | | | | | |
|---|---|---|---|---|---|
| Current access time to communications buffer for DP master | | | | | |
| - | 0 | | | UDoubleword | r |
| Multi-line: no | | | dpBusCfgNumBuses | | |

| **dpBusStateAccessDuration Max** | | | | | |
|---|---|---|---|---|---|
| Maximum access time to communications buffer for DP master | | | | | |
| - | 0 | | | UDoubleword | r |
| Multi-line: no | | | dpBusCfgNumBuses | | |

| **dpBusStateAccessDuration Min** | | | | | |
|---|---|---|---|---|---|
| Minimum access time to communications buffer for DP master | | | | | |
| - | 0 | | | UDoubleword | r |
| Multi-line: no | | | dpBusCfgNumBuses | | |

| **dpBusStateAccessErrCnt1** | | | | | |
|---|---|---|---|---|---|
| Number of bus access errors of type 1 since NCK Start | | | | | |
| - | 0 | | | UDoubleword | r |
| Multi-line: no | | | dpBusCfgNumBuses | | |

| **dpBusStateAccessErrCnt2** | | | | | |
|---|---|---|---|---|---|
| Number of bus access errors of type 2 since NCK Start | | | | | |
| - | 0 | | | UDoubleword | r |
| Multi-line: no | | | dpBusCfgNumBuses | | |

| **dpBusStateAvgCycleBetweenErr1** | | | | | |
|---|---|---|---|---|---|
| Average number of cycles between two<br>bus access errors of type 1 | | | | | |
| - | 0 | | | UDoubleword | r |
| Multi-line: no | | | dpBusCfgNumBuses | | |

| **dpBusStateAvgCycleBetweenErr2** | | | | | |
|---|---|---|---|---|---|
| Average number of cycles between two<br>bus access errors of type 2 | | | | | |
| - | 0 | | | UDoubleword | r |
| Multi-line: no | | | dpBusCfgNumBuses | | |

| **dpBusStateCycleCnt** | | | | | |
|---|---|---|---|---|---|
| Number of bus cycles since NCK Start | | | | | |
| - | 0 | | | UDoubleword | r |
| Multi-line: no | | | dpBusCfgNumBuses | | |

| **dpBusStateDpmAction** | | | | | |
|---|---|---|---|---|---|
| Indicator for operating progress of DP M | | | | | |
| - | 0 | | | UDoubleword | r |
| Multi-line: no | | | dpBusCfgNumBuses | | |

© Siemens AG 2004 All Rights Reserved

| **dpBusStateDpmActual** | | | | | |
|---|---|---|---|---|---|
| Current status of DP M bus - controlled by DP M | | | | | |
| - | 0 | | | UWord | r |
| Multi-line: no | | | dpBusCfgNumBuses | | |

| **dpBusStateDpmCtrl** | | | | | |
|---|---|---|---|---|---|
| Booting status of processor for DP Master dpcadmin | | | | | |
| - | 0 | | | UWord | r |
| Multi-line: no | | | dpBusCfgNumBuses | | |

| **dpBusStateDpmError** | | | | | |
|---|---|---|---|---|---|
| Error on status transitions | | | | | |
| - | 0 | | | UDoubleword | r |
| Multi-line: no | | | dpBusCfgNumBuses | | |

| **dpBusStateDpmPrjCnt** | | | | | |
|---|---|---|---|---|---|
| Modification counter for new DP configurations.<br><br>Suggested use:<br>*) Read modification counter (1)<br>*) Read out configuring data<br>*) Read modification counter (2)<br>*) If the modification counters in (1) and (2) are identical<br>and both display "valid", the data read from HW-Config<br>will be consistent.<br>even values -> configuration invalid<br>uneven values -> configuration valid | | | | | |
| - | 0 | | | UWord | r |
| Multi-line: no | | | dpBusCfgNumBuses | | |

| **dpBusStateDpmRequest** | | | | | |
|---|---|---|---|---|---|
| Desired status of DP M bus - request from HOST | | | | | |
| - | 0 | | | UWord | r |
| Multi-line: no | | | dpBusCfgNumBuses | | |

| **dpBusStateNumActiveSlaves** | | | | | |
|---|---|---|---|---|---|
| This data indicates how many slaves can currently be<br>accessed via the bus. This value is updated in online operation.<br><br>The number of slaves on the bus is determined<br>by the Profibus standard (DIN19245 EN50170) | | | | | |
| - | 0 | 0 | 125 | UDoubleword | r |
| Multi-line: no | | | dpBusCfgNumBuses | | |

| **dpClientCfgId** | | | | | |
|---|---|---|---|---|---|
| Identification client NCK/PLC/3RD | | | | | |
| - | 0 | | | UWord | r |
| Multi-line: no | | | dpClientCfgNumClnt | | |

| **dpClientCfgNumClnt** | | | | | |
|---|---|---|---|---|---|
| Number of clients | | | | | |
| - | 0 | 0 | INT32_MAX | UDoubleword | r |
| Multi-line: no | | | 1 | | |

© Siemens AG 2004 All Rights Reserved

| **dpClientCfgValid** | | | | | |
|---|---|---|---|---|---|
| Client information is available<br>0=no client information available<br>1=client information is available | | | | | |
| - | 0 | 0 | 1 | UDoubleword | r |
| Multi-line: no | | | 1 | | |

| **dpClientStateComm** | | | | | |
|---|---|---|---|---|---|
| Client status incl. output release<br>0=No output enable<br>1=Client state output enable | | | | | |
| - | 0 | | | UWord | r |
| Multi-line: no | | | dpClientCfgNumClnt | | |

| **dpSlaveCfgAssignBus** | | | | | |
|---|---|---|---|---|---|
| Bus number of the slave | | | | | |
| - | 0 | | | UWord | r |
| Multi-line: no | | | dpSlaveCfgNumSlaves | | |

| **dpSlaveCfgBusAddr** | | | | | |
|---|---|---|---|---|---|
| The address of the slave on the bus.<br>In addition to its own address, every slave has a broadcast address via which all salves can be addressed.<br>The broadcast address is not available for individually addressing a single slave.<br>127: Broadcast address | | | | | |
| - | 0 | 0 | 127 | UWord | r |
| Multi-line: no | | | dpSlaveCfgNumSlaves | | |

| **dpSlaveCfgInputTime** | | | | | |
|---|---|---|---|---|---|
| Time for actual-value sensing<br>See dpSlaveMasterAppCycTime | | | | | |
| s, user defined | 0 | | | Double | r |
| Multi-line: no | | | dpSlaveCfgNumSlaves | | |

| **dpSlaveCfgMasterAppCycTime** | | | | | |
|---|---|---|---|---|---|
| Position controller cycle.<br>For a detailed description, please refer to PROFIDRIVE PROFIL ANTRIEBSTECHNIK (Edition: V1.2 Draft, April 1999) Section 7<br>See PROFIDRIVE PROFIL ANTRIEBSTECHNIK (Edition: V1.2 Draft, April 1999) Section 7 | | | | | |
| s, user defined | 0 | | | Double | r |
| Multi-line: no | | | dpSlaveCfgNumSlaves | | |

| **dpSlaveCfgNumSlaves** | | | | | |
|---|---|---|---|---|---|
| Number of slaves configured in SDB1xxx.<br>This value may not match the actual number of slaves connected to the bus.<br>The number of slaves which can be configured for bus connection is determined by Profibus standard (DIN19245 EN50170). | | | | | |
| - | 0 | 0 | 125 | UDoubleword | r |
| Multi-line: no | | | 1 | | |

© Siemens AG 2004 All Rights Reserved

| **dpSlaveCfgOutputTime** | | | | | |
|---|---|---|---|---|---|
| Time for setpoint acceptance<br>See dpSlaveMasterAppCycTime | | | | | |
| s, user defined | 0 | | | Double | r |
| Multi-line: no | | | dpSlaveCfgNumSlaves | | |

| **dpSlaveCfgValid** | | | | | |
|---|---|---|---|---|---|
| This data indicates whether the slave data structure<br>has already been initialized. The structure is initialized<br>when a slave configuration or status data is accessed.<br>Scanning dpSlaveCfgValid also activates initialization<br>of the structure.<br><br>True: Slave data are available<br>False: Slave data are not available | | | | | |
| - | 0 | 0 | 1 | UDoubleword | r |
| Multi-line: no | | | 1 | | |

| **dpSlaveIdentNo** | | | | | |
|---|---|---|---|---|---|
| Ident number of the slave | | | | | |
| - | 0 | | | UWord | r |
| Multi-line: no | | | dpSlaveCfgNumSlaves | | |

| **dpSlaveIdentNoEx** | | | | | |
|---|---|---|---|---|---|
| The extended ID no. of the PROFIBUS slave<br>helps to identify the PROFIBUS slaves not officially classified<br>as such and therefore lack specificiation dpSlaveIdentNo. | | | | | |
| - | 0 | | | UWord | r |
| Multi-line: no | | | dpSlaveCfgNumSlaves | | |

| **dpSlaveStateComm** | | | | | |
|---|---|---|---|---|---|
| The slave is active on the bus once the drive assigned to<br>the slave has successfully logged on to the bus.<br>True: Slave on bus<br>False: Slave not on bus | | | | | |
| - | 0 | 0 | 1 | UWord | r |
| Multi-line: no | | | dpSlaveCfgNumSlaves | | |

| **dpSlaveStateIncCnt** | | | | | |
|---|---|---|---|---|---|
| The incarnation counter of the slave<br>is increased by one each time the slave is included in the bus. If the slave drops out of the bus, this counter is not changed.<br>After the first time it has gone into the bus (that is the first operational status of the slave), the value is 1.<br>In case of an area overflow, the count restarts at 0.<br>This only functions with slaves which contain at least one assigned NC axis. In the case of other slaves (pure I/O slaves, or axes controlled by the PLC), this values remains at 0.<br><br>From 0 (starting value after Restart) to a maximum of 2147483647 (2^31-1). | | | | | |
| - | 0 | 0 | 2147483647 | UDoubleword | r |
| Multi-line: no | | | dpSlaveCfgNumSlaves | | |

© Siemens AG 2004 All Rights Reserved

| **dpSlaveStateSync** | | | | | |
|---|---|---|---|---|---|
| The drive linked to this slave is operating in cyclic mode.<br>Slaves without a drive are defined as "non-cyclical".<br>True: Cyclical<br>False: Non-cyclical | | | | | |
| - | 0 | 0 | 1 | UWord | r |
| Multi-line: no | | | dpSlaveCfgNumSlaves | | |

| **dpSlotCfgAssignAxis** | | | | | |
|---|---|---|---|---|---|
| This data supplies the axis indices of the drive, encoder 1 and encoder 2<br>for access in the Axis-Assign-Table.<br>The 32-bit value consists of 4 bytes with the following meaning:<br>Byte0(bits 0-7) = axis index of axis<br>Byte1(bits 8-15) = axis index, encoder 1<br>Byte2(bits 16-23)= axis index, encoder 2<br>Byte3(bits 24-31)= provided for future extensions.<br>A byte with the value 0xFF indicates that no axis index<br>is defined for the relevant slot. | | | | | |
| - | 255 | 0 | 32 | UDoubleword | r |
| Multi-line: no | | | dpSlotCfgNumSlots | | |

| **dpSlotCfgAssignBus** | | | | | |
|---|---|---|---|---|---|
| Bus number assigned to this slot<br>Since only one bus is currently supported by Profibus DP,<br>there is only one bus to which all slots are assigned. | | | | | |
| - | 0 | 0 | 1 | UDoubleword | r |
| Multi-line: no | | | dpSlotCfgNumSlots | | |

| **dpSlotCfgAssignClient** | | | | | |
|---|---|---|---|---|---|
| This data supplies the clientIndex for accessing the<br>Client Assign table.<br>0=no assignment possible (this applies to diagnostic and PKW slots)<br>>0 assignment exists | | | | | |
| - | 0 | 0 | 2 | UDoubleword | r |
| Multi-line: no | | | dpSlotCfgNumSlots | | |

| **dpSlotCfgAssignMaster** | | | | | |
|---|---|---|---|---|---|
| Number of master to which this slot is assigned<br>Since only one bus is currently supported by<br>Profibus DP and only one Class 1 Master exists<br>per bus, there is only one master to which all slots<br>are assigned. | | | | | |
| - | 0 | 0 | 1 | UDoubleword | r |
| Multi-line: no | | | dpSlotCfgNumSlots | | |

| **dpSlotCfgAssignSlave** | | | | | |
|---|---|---|---|---|---|
| This data contains the bus address of the slave<br>belonging to the nth slot.<br>All legal slave addresses can be specified | | | | | |
| - | 0 | 0 | 125 | UDoubleword | r |
| Multi-line: no | | | dpSlotCfgNumSlots | | |

| **dpSlotCfgIoType** | | | | | |
|---|---|---|---|---|---|
| I/O identifier<br>0 = input slot<br>1 = output slot<br>2 = diagnosis slot | | | | | |
| - | 0 | 0 | 2 | UWord | r |
| Multi-line: no | | | dpSlotCfgNumSlots | | |

© Siemens AG 2004 All Rights Reserved

| **dpSlotCfgLength** | | | | | |
|---|---|---|---|---|---|
| Length in number of bytes | | | | | |
| - | 0 | 0 | 32 | UDoubleword | r |
| Multi-line: no | | | dpSlotCfgNumSlots | | |

| **dpSlotCfgLogBaseAddress** | | | | | |
|---|---|---|---|---|---|
| The logical basic address of the slot is assigned during configuration. Although it is not needed on the bus for data transfer purposes, this address is the only means by which a unique link can be created between the NCK and bus nodes. | | | | | |
| - | 0 | 0 | UINT16_MAX | UWord | r |
| Multi-line: no | | | dpSlotCfgNumSlots | | |

| **dpSlotCfgNumSlots** | | | | | |
|---|---|---|---|---|---|
| The total number of all slots configured in the system is stored in this data.<br>0 (lower limit) up to INT32_MAX(upper limit);<br>Note that a slave cannot support more than 256 slots. | | | | | |
| - | 0 | 0 | INT32_MAX | UDoubleword | r |
| Multi-line: no | | | 1 | | |

| **dpSlotCfgSlaveAddress** | | | | | |
|---|---|---|---|---|---|
| This data contains the bus address of the slave to which this slot is assigned.<br>Several slots may have the same slave address.<br><br>The number of available addresses on the bus is determined by the Profibus standard (DIN19245 EN50170). | | | | | |
| - | 0 | 0 | 125 | UWord | r |
| Multi-line: no | | | dpSlotCfgNumSlots | | |

| **dpSlotCfgSlotNr** | | | | | |
|---|---|---|---|---|---|
| Slot number within the slave<br>A maximum total of 256 slots can be assigned to each slave.<br>0: Diagnostic slot<br>2: Diagnostic slot<br>4: 1st data slot | | | | | |
| - | 0 | 0 | 255 | UWord | r |
| Multi-line: no | | | dpSlotCfgNumSlots | | |

| **dpSlotCfgValid** | | | | | |
|---|---|---|---|---|---|
| The slot data structure (CcIdent) exists and is initialized.<br>True: Data are valid<br>False: Data are invalid or not initialized | | | | | |
| - | 0 | 0 | 1 | UDoubleword | r |
| Multi-line: no | | | 1 | | |

| **dpSlotStateComm** | | | | | |
|---|---|---|---|---|---|
| Status of slots (ok, failed, not processed by the NCK)<br>0= no sign of life<br>1= sign of life<br>2= not processed by NCK | | | | | |
| - | 0 | 0 | 1 | UWord | r |
| Multi-line: no | | | dpSlotCfgNumSlots | | |

© Siemens AG 2004 All Rights Reserved

| **dpSlotStateRecvTelegram** | | | | | |
|---|---|---|---|---|---|
| Bit pattern of this slot received by the master<br>in the form of a hexadecimal string | | | | | |
| - | 0 | | | String[198] | r |
| Multi-line: no | | | dpSlotCfgNumSlots | | |

| **dpSlotStateSendTelegram** | | | | | |
|---|---|---|---|---|---|
| Bit pattern of this slot sent to the slave in<br>the form of a hexadecimal string<br>Transmitted message frame | | | | | |
| - | 0 | | | String[198] | r |
| Multi-line: no | | | dpSlotCfgNumSlots | | |

| **dpSlotStateTelegramType** | | | | | |
|---|---|---|---|---|---|
| Message frame type of slot<br>0 = Message frame type unknown | | | | | |
| - | 0 | 0 | UINT16_MAX | UWord | r |
| Multi-line: no | | | dpSlotCfgNumSlots | | |

| **dpSysCfgAvailable** | | | | | |
|---|---|---|---|---|---|
| This data specifies whether the system has been generated<br>with DP Adapter and/or DP Master<br>0= Neither DPA nor DPM available<br>1= DPA available<br>2= DPM available<br>3= DPA and DPM available | | | | | |
| - | 0 | 0 | 3 | UWord | r |
| Multi-line: no | | | 1 | | |

| **dpSysCfgNumMaster** | | | | | |
|---|---|---|---|---|---|
| Number of masters<br>There is only one master per bus with DP.<br>Since only 1 bus is currently permitted by the<br>bus standard, there can only be a maximum<br>of one master. | | | | | |
| - | 0 | 0 | 1 | UDoubleword | r |
| Multi-line: no | | | 1 | | |

| **dpSysCfgValid** | | | | | |
|---|---|---|---|---|---|
| This data indicates whether the configuration data are valid and<br>initialized.<br>TRUE or FALSE | | | | | |
| - | 0 | 0 | 1 | UDoubleword | r |
| Multi-line: no | | | 1 | | |

| **dpSysCfgVersionDpm** | | | | | |
|---|---|---|---|---|---|
| Version number of DP M SW as numerical value | | | | | |
| - | 0 | | | Double | r |
| Multi-line: no | | | dpSysCfgNumMaster | | |

| **dpSysCfgVersionDpr** | | | | | |
|---|---|---|---|---|---|
| Actual version Dpr (inaccessible in earlier SW) | | | | | |
| - | 0 | | | Double | r |
| Multi-line: no | | | dpSysCfgNumMaster | | |

© Siemens AG 2004 All Rights Reserved

| **dpSysCfgVersionDprEx** | | | | | |
|---|---|---|---|---|---|
| DPR_SS_VERSION is a version number stored in the NCK which can be read out via this variable. | | | | | |
| - | 0 | | | Double | r |
| Multi-line: no | | | dpSysCfgNumMaster | | |

| **dpSysCfgVersionHost** | | | | | |
|---|---|---|---|---|---|
| This data contains the version number of the host SW as a numerical value | | | | | |
| - | 0 | 0 | UINT16_MAX | Double | r |
| Multi-line: no | | | dpSysCfgNumMaster | | |

| **dpSysStateDpmInit** | | | | | |
|---|---|---|---|---|---|
| There are three different initialization states: REQUEST, ACKNOWLEDGE and ERROR | | | | | |
| - | 0 | | | UWord | r |
| Multi-line: no | | | dpSysCfgNumMaster | | |

| **errCodeSetNrGen** | | | | | |
|---|---|---|---|---|---|
| Selection of error code set to be used in the case of communication errors. The selection is client-specific, the client is identified by the sender address.<br>0: P1-compatible code<br>5: P5-compatible code<br>6: P6-compatible code | | | | | |
| - | 0 | 0 | | UWord | wr |
| Multi-line: yes | 1 | | 1 | | |

| **errCodeSetNrPi** | | | | | |
|---|---|---|---|---|---|
| Selection of error code set to be used by PI Services in the case of communication errors. The selection is client-specific, the client is identified by the sender address.<br>0: P1-compatible code<br>5: P5-compatible code<br>6: P6-compatible code | | | | | |
| - | 0 | 0 | | UWord | wr |
| Multi-line: yes | 1 | | 1 | | |

| **maxCycleTimeBrut** | | | | | |
|---|---|---|---|---|---|
| Sum of maximum gross runtime of all channels | | | | | |
| ms | 0 | 0 | | Double | r |
| Multi-line: yes | Selects a specific SW task on the NCK:<br>Line index 1: SERVO<br>Line index 2: IPO<br>Line index 3: VL<br>Line index 4: PLC<br>Line index 5: SYNACT (from SW 7.1) | | 4 | | |

| **maxCycleTimeNet** | | | | | |
|---|---|---|---|---|---|
| Sum of maximum net runtime of all channels | | | | | |
| ms | 0 | 0 | | Double | r |
| Multi-line: yes | Selects a specific SW task on the NCK:<br>Line index 1: SERVO<br>Line index 2: IPO<br>Line index 3: VL<br>Line index 4: PLC<br>Line index 5: SYNACT (from SW 7.1) | | 4 | | |

© Siemens AG 2004 All Rights Reserved

| **minCycleTimeBrut** | | | | | |
|---|---|---|---|---|---|
| Sum of minimum gross runtimes of all channel | | | | | |
| ms | 0 | 0 | | Double | r |
| Multi-line: yes | Selects a specific SW task on the NCK:<br>Line index 1: SERVO<br>Line index 2: IPO<br>Line index 3: VL<br>Line index 4: PLC<br>Line index 5: SYNACT (from SW 7.1) | | 4 | | |

| **minCycleTimeNet** | | | | | |
|---|---|---|---|---|---|
| Sum of minimum net runtimes of all channels | | | | | |
| ms | 0 | 0 | | Double | r |
| Multi-line: yes | Selects a specific SW task on the NCK:<br>Line index 1: SERVO<br>Line index 2: IPO<br>Line index 3: VL<br>Line index 4: PLC<br>Line index 5: SYNACT (from SW 7.1) | | 4 | | |

| **nckCompileSwitches** | | | | | |
|---|---|---|---|---|---|
| Selected NCK compiler switches<br>Bit0: NDEBUG<br>Bit1: NOTRACES<br>Bit2: EMBARGO<br>Bit3: TARGET | | | | | |
| - | | | | UWord | r |
| Multi-line: yes | 1 | | 1 | | |

| **pcmciaDataShotAct** | | | | | |
|---|---|---|---|---|---|
| Current access to PCMCIA card: Transferred bytes<br>Data pcmciaShotStatus, pcmciaDataShotSum and pcmciaDataShotAct can be used to implement a status display for PCMCIA card access operations. | | | | | |
| - | 0 | 0 | | UDoubleword | r |
| Multi-line: yes | 1 | | 1 | | |

| **pcmciaDataShotSum** | | | | | |
|---|---|---|---|---|---|
| Current access to PCMCIAcard: Total length in bytes.<br>Data pcmciaShotStatus, pcmciaDataShotSum and pcmciaDataShotAct can be used to implement a status display for PCMCIA card access operations. | | | | | |
| - | 0 | 0 | | UDoubleword | r |
| Multi-line: yes | 1 | | 1 | | |

| **pcmciaFfsLength** | | | | | |
|---|---|---|---|---|---|
| Length of FFS on PCMCIA card in bytes | | | | | |
| - | 0 | 0 | | UDoubleword | r |
| Multi-line: yes | 1 | | 1 | | |

© Siemens AG 2004 All Rights Reserved

| **pcmciaShotStatus** | | | | | |
|---|---|---|---|---|---|
| Current access to PCMCIA-Karte: Status<br>Data pcmciaShotStatus, pcmciaDataShotSum and pcmciaDataShotAct can be used to implement a status display for PCMCIA card access operations.<br>0: Not active<br>1: Write active<br>2: Read active<br>3-: Reserved | | | | | |
| - | 0 | 0 | | UWord | r |
| Multi-line: yes | 1 | | 1 | | |

| **pcmciaStartFfsOffset** | | | | | |
|---|---|---|---|---|---|
| Start offset of FFS at beginning of PCMCIA card in bytes | | | | | |
| - | 0 | 0 | | UDoubleword | r |
| Multi-line: yes | 1 | | 1 | | |

| **pcmciaStartShotOffset** | | | | | |
|---|---|---|---|---|---|
| Current access to PCMCIA card: Start offset at beginning of PCMCIA card in bytes | | | | | |
| - | 0 | 0 | | UDoubleword | r |
| Multi-line: yes | 1 | | 1 | | |

| **poweronTime** | $AN_POWERON_TIME | | | | |
|---|---|---|---|---|---|
| Time since last normal boot ( in minutes )<br>Can be written from SW 6.3. | | | | | |
| s, user defined | 0.0 | | | Double | wr |
| Multi-line: yes | 1 | | 1 | | |

| **setupTime** | $AN_SETUP_TIME | | | | |
|---|---|---|---|---|---|
| Time since last "control system boot on default values" ( in minutes ).<br>The timer is automatically set to zero on every "control system boot on default values".<br>Can be written from SW 6.3. | | | | | |
| s, user defined | 0.0 | | | Double | wr |
| Multi-line: yes | 1 | | 1 | | |

© Siemens AG 2004 All Rights Reserved

## 3.11.2 Area C, Mod. DIAGN: Channel-specific diagnosis data

**OEM-MMC: Linkitem** /Channel/ChannelDiagnose/...

This module contains information about the channel-specific NC diagnostic data.
The measured time variables are available on the destination hardware only. The net time is calculated without interrupts by higher priority time levels, the gross time includes the interrupts. The highest priority time level is the SERVO, followed by the IPO and finally the interpreter/ preparation. To obtain useful minimum and maximum time intervals, the corresponding variables must be initialized before the measurement.

| **aclpoBuf** | $AC_IPO_BUF | | | | |
|---|---|---|---|---|---|
| Level of IPO buffer (number of blocks) | | | | | |
| - | 0 | 0 | | UWord | r |
| Multi-line: yes | 1 | | 1 | | |

| **actCycleTimeBrut** | | | | | |
|---|---|---|---|---|---|
| Current gross cycle time<br>line index 1: SERVO-task<br>line index 2: IPO-task<br>line index 3: interpreter/preparation-task<br>line index 4: PLC<br>line index 5: SYNACT (from SW 7.1) | | | | | |
| ms | | | | Double | r |
| Multi-line: yes | 1 - 3 | | 3 | | |

| **actCycleTimeNet** | | | | | |
|---|---|---|---|---|---|
| Current net cycle time<br>line index 1: SERVO-task<br>line index 2: IPO-task<br>line index 3: interpreter/preparation-task<br>line index 4: PLC<br>line index 5: SYNACT (from SW 7.1) | | | | | |
| ms | | | | Double | r |
| Multi-line: yes | 1 - 3 | | 3 | | |

| **cuttingTime** | $AC_CUTTING_TIME | | | | |
|---|---|---|---|---|---|
| Tool operating time ( in seconds ):<br>The operating time of the path axes excluding active rapid traverse is measured in all NC programs between NC Start and Program End/NC Reset.<br>The measurement is also interrupted during an active dwell time. The timer is automatically set to zero every time the control boots on default values.<br>Can be written as of SW 6.3. | | | | | |
| s, user defined | 0.0 | | | Double | wr |
| Multi-line: yes | 1 | | 1 | | |

© Siemens AG 2004 All Rights Reserved

| **cycleTime** | $AC_CYCLE_TIME | | | | |
|---|---|---|---|---|---|
| Runtime of selected NC program ( in seconds ):<br>The runtime between NC Start and Program End / NC Reset is measured in the selected NC program.<br>The timer is cleared when a new NC program is started.<br>Can be written as of SW 6.3. | | | | | |
| s, user defined | 0.0 | | | Double | wr |
| Multi-line: yes | 1 | | 1 | | |

| **ipoBufLevel** | | | | | |
|---|---|---|---|---|---|
| Fill level of the IPO buffer (integer value in %) | | | | | |
| % | | 0 | 100 | UWord | r |
| Multi-line: yes | 1 | | 1 | | |

| **maxCycleTimeBrut** | | | | | |
|---|---|---|---|---|---|
| Maximum gross cycle time<br>line index 1: SERVO-task<br>line index 2: IPO-task<br>line index 3: interpreter/preparation task<br>line index 4: PLC<br>line index 5: SYNACT (from SW 7.1) | | | | | |
| ms | | | | Double | wr |
| Multi-line: yes | 1 - 3 | | 3 | | |

| **maxCycleTimeNet** | | | | | |
|---|---|---|---|---|---|
| Maximum net cycle time<br>line index 1: SERVO-task<br>line index 2: IPO-task<br>line index 3: interpreter/preparation-task<br>line index 4: PLC<br>line index 5: SYNACT (from SW 7.1) | | | | | |
| ms | | | | Double | wr |
| Multi-line: yes | 1 - 3 | | 3 | | |

| **minCycleTimeBrut** | | | | | |
|---|---|---|---|---|---|
| Minimum gross cycle time<br>line index 1: SERVO-task<br>line index 2: IPO-task<br>line index 3: interpreter/preparation task<br>line index 4: PLC<br>line index 5: SYNACT (from SW 7.1) | | | | | |
| ms | | | | Double | wr |
| Multi-line: yes | 1 - 3 | | 3 | | |

| **minCycleTimeNet** | | | | | |
|---|---|---|---|---|---|
| Minimum net cycle time<br>line index 1: SERVO-task<br>line index 2: IPO-task<br>line index 3: interpreter/preparation-task<br>line index 4: PLC<br>line index 5: SYNACT (from SW 7.1) | | | | | |
| ms | | | | Double | wr |
| Multi-line: yes | 1 - 3 | | 3 | | |

© Siemens AG 2004 All Rights Reserved

| **operatingTime** | $AC_OPERATING_TIME | | | | |
|---|---|---|---|---|---|
| Total runtime of NC programs in Automatic mode<br>( in seconds ):<br>The runtimes of all programs are summed between<br>NC Start and Program End/NC Reset.<br>The timer is set to zero on every control boot.<br>Can be written as of SW 6.3. | | | | | |
| s, user defined | 0.0 | | | Double | wr |
| Multi-line: yes | 1 | | 1 | | |

© Siemens AG 2004 All Rights Reserved

## 3.11.3 Area N, Mod. ETPD: Data lists for protocolling

**OEM-MMC: Linkitem** /Nck/ProtocolData/...

Data lists for protocolling.This module allows to access several lines or rows at a time.

| **area** | | | | | |
|---|---|---|---|---|---|
| Variable specification of nth OPI data in the list:<br>area | | | | | |
| - | | | | UWord | wr |
| Multi-line: yes | 2 + 5 * ( n-1) | | 2 + 5 * (numData- 1) | | |

| **col** | | | | | |
|---|---|---|---|---|---|
| Variable specification of nth OPI data in list:<br>col | | | | | |
| - | | | | UWord | wr |
| Multi-line: yes | 4 + 5 * ( n-1) | | 4 + 5 * (numData- 1) | | |

| **numData** | | | | | |
|---|---|---|---|---|---|
| Number of data in the list<br><= maxnumTraceProtData | | | | | |
| - | | 0 | maxnumTracePr otData | UWord | wr |
| Multi-line: yes | 1 | | 1 | | |

| **row** | | | | | |
|---|---|---|---|---|---|
| Variable specification of nth OPI data in list:<br>row | | | | | |
| - | | | | UWord | wr |
| Multi-line: yes | 5 + 5 * ( n-1) | | 5 + 5 * (numData- 1) | | |

| **type** | | | | | |
|---|---|---|---|---|---|
| Variable specification of nth OPI data in list:<br>type | | | | | |
| - | | | | UWord | wr |
| Multi-line: yes | 6 + 5 * ( n-1) | | 6 + 5 * (numData- 1) | | |

| **unit** | | | | | |
|---|---|---|---|---|---|
| Variable specification of nth OPI data in list:<br>unit | | | | | |
| - | | | | UWord | wr |
| Multi-line: yes | 3 + 5 * ( n-1) | | 3 + 5 * (numData- 1) | | |

© Siemens AG 2004 All Rights Reserved

## 3.11.4 Area C, Mod. ETP: Types of events

**OEM-MMC: Linkitem** /Channel/ProtocolEvent/...

Description of logging event types.
It is permissible to access this module via several lines and columns.

The line index identifies a specific event.
Standard events: line index <=10000:
OEM events: line index > 10000:
User index: is determined by the 1000s digit of the line index
Event type: is determined by the last three digits of the line index

Examples of the line index:
00001: Standard event of user 0 with the number 1 (IPO)
00006: Standard event of user 0 with the number 6 (NC start)
03006: Standard event of user 3 with the number 6 (NC start)
06006: Standard event of user 6 with the number 6 (NC start)
10001: OEM event of user 0 with the number 1
13002: OEM event of user 3 with the number 2

Standard event types:

Cyclic events:

| | | |
|---|---|---|
| 1 = | IPO and | IPO cycle |
| 15 = | IPO2 | |
| 47 = | IPO3 | (from SW 6.4) |
| 48 = | IPO4 | (from SW 6.4) |

Acyclic events related to axis motions:

| | | |
|---|---|---|
| 2 = | GEO_AXIS_START and | Geo axis starts or changes the direction |
| 18 = | GEO_AXIS_STARTa | see VDI interface NCK->PLC channel specific DBB40 Bit6 and Bit7 (Bit6 = motion command+, Bit7 = motion command-) Event occurs when a bit is reset. |
| 3 = | GEO_AXIS_STOP and | Geo axis stops |
| 19 = | GEO_AXIS_STOPa, | see VDI interface NCK->PLC channel specific DBB40 Bit6 and Bit7 (Bit6 = motion command-, Bit7 = motion command+) Event occurs when both bits are set to 0 and one of them was previously active. |
| 4 = | MA_AXIS_START, | One machine axis of the channel starts or changes the direction see VDI interface NCK->PLC axis-specific DBB64 Bit6 and Bit7 (Bit6 = motion command-, Bit7 = motion command+) Event occurs when a bit is reset. |
| 5 = | MA_AXIS_STOP, | One machine axis stops see VDI interface NCK->PLC axis-specific DBB64 Bit6 and Bit7 (Bit6 = motion command-, Bit7 = motion command+) |

© Siemens AG 2004 All Rights Reserved

Event occurs if both bits are set to 0 and one of them was previously active.

Acyclic events related to channel influence:

6 = NC_START NC start (if detected in NC)

7 = NC_STOP NC stop (if detected in NC, axes may still be traversed)

Acyclic events related to part program processing:

8 = BLOCK_BEG_1 Block start (first IPO cycle of a block) without intermediate blocks, all program levels

9 = BLOCK_BEG_2 and Block start (first IPO cycle of a block) with intermediate blocks, all program levels

20 = BLOCK_BEG_2a

10 = BLOCK_BEG_3 Block start (first IPO cycle of a block) without intermediate blocks, only main program level and MDA level

16 = BLOCK_BEG_S1 and Block start (search run with computation) with intermediate blocks, all program levels

22 = BLOCK_BEG_S1a

11 = BLOCK_END_1 Block end (first IPO cycle of a block) without intermediate blocks, all program levels

12 = BLOCK_END_2 and Block end (first IPO cycle of a block) with intermediate blocks, all program levels

21 = BLOCK_END_2a

13 = BLOCK_END_3 Block end (first IPO cycle of a block) without intermediate blocks, only main program level and MDA level

17 = BLOCK_END_S1 Block end (search run with computation) with intermediate blocks, all program levels

31 = BLOCK_END_P1 Block end (run in) (from SW ?: not yet implemented)

32 = BLOCK_END_P1a Block end (run in) (from SW ?: not yet implemented)

44 = BLOCK_END_I1 Block end (interpreter) (from SW 6.4)

43 = NC_LEVEL_CHG Level change during part program processing (from SW 6.4)

Acyclic events triggered by part programm command WRTPR:

23 = PROT_TXT_REQ Logging a WRTPR text

24 = PROT_TXT_REQ_S1 Logging a WRTPR text (search run with computation)

33 = PROT_TXT_REQ_P1 Logging a WRTPR text (run in) (from SW 6.4)

Acyclic events triggered by the logging process itself

14 = PROT_FILE_BEG Start logging related to a log file.

© Siemens AG 2004 All Rights Reserved

29 = PROT_START_TRIG Start trigger has triggered (from SW 6.4)
30 = PROT_STOP_TRIG Stop trigger has triggered (from SW 6.4)
46 = PROT_START Start logging (from SW 6.4)
45 = PROT_STOP Stop logging (from SW 6.4)

Acyclic events triggered by buttons
42 = CANCEL_BUTTON The Cancel button was pressed (from SW 6.4)
Acyclic events triggered by alarms
41 = ALARM_REPORTED An alarm has occurred (from SW 6.4)

Acyclic events triggered by synchronized action
36 = SYNC_ACT_ACTIV Activating synchronized action (from SW 6.4)
37 = SYNC_ACT_DEACT Deactivating synchronized action (from SW 6.4)
38 = SYNC_ACT_FIRE Synchronized action triggers (from SW 6.4)
Acyclic events triggered by tool
25 = TOOL_CHANGE tool change (from SW 6.2)
27 = TOOL_CHANGE_S1 tool change (search run with computation) (from SW 6.3)
34 = TOOL_CHANGE_P1 tool change (run in) (from SW 6.4)
26 = CUTTEDGE_CHANGE cutting edge change (from SW 6.2)
28 = CUTTEDGE_CHANGE_S1 cutting edge change (search run with computation) (from SW 6.3)
35 = CUTTEDGE_CHANGE_P1 cutting edge change (run in) (from SW 6.4)
Acyclic events triggered by PLC
39 = PLC_OB_1 PLC OB1 started (from SW 6.4)
40 = PLC_OB40 PLC OB40 started (from SW 6.4)

| **asciiMode** | | | | | |
|---|---|---|---|---|---|
| Data logging format<br>0: Data recorded in binary format with fixed alignment to 8 bytes<br>1: Data recorded in ASCII format<br>2: Data recorded in binary format with variable alignment<br>3: Data recorded in binary format with variable alignment and optimization of two consecutive data records of the same event. In this case, only the header is logged, not the actual data. | | | | | |
| - | 0 | 0 | 3 | UWord | wr |
| Multi-line: yes | Event (see module header) | | siehe Bausteinkopf | | |

© Siemens AG 2004 All Rights Reserved

| **countActivated** | | | | | |
|---|---|---|---|---|---|
| Number of times the event has occurred | | | | | |
| - | 0 | | | UWord | r |
| Multi-line: no | | | | | |

| **dataListIndex** | | | | | |
|---|---|---|---|---|---|
| Index of data list to be used<br>All valid columns in module ETPD - 1) | | | | | |
| - | 0 | 0 | | UWord | wr |
| Multi-line: yes | Event (see module header) | | siehe Bausteinkopf | | |

| **dataProtok** | | | | | |
|---|---|---|---|---|---|
| Number of bytes entered in the Fifo file | | | | | |
| - | 0 | | | UWord | r |
| Multi-line: no | | | | | |

| **dataUploaded** | | | | | |
|---|---|---|---|---|---|
| Number of bytes already uploaded from the Fifo file | | | | | |
| - | 0 | | | UWord | r |
| Multi-line: no | | | | | |

| **eventActive** | | | | | |
|---|---|---|---|---|---|
| Event state<br>0: Not active<br>1: Active<br>2: Deactivate and release data set | | | | | |
| - | 0 | 0 | 2 | UWord | wr |
| Multi-line: yes | Event (see module header) | | siehe Bausteinkopf | | |

| **eventActiveStatus** | | | | | |
|---|---|---|---|---|---|
| For diagnosis: Event state<br>0: Activated<br>1: Not activated<br>2: Cannot be activated because the sum of the variable lengths is too large<br>3: Cannot be activated because the internal resources are not sufficient<br>4: Cannot be activated because the protocol file cannot be created<br>100-...- cannot be activated because the variable specification with the index (value - 100) is wrong | | | | | |
| - | 0 | 0 | | UWord | r |
| Multi-line: yes | Event (see module header) | | siehe Bausteinkopf | | |

| **maxElementsFastFifoUsed** | | | | | |
|---|---|---|---|---|---|
| For diagnosis: Maximum number of entries in the FIFO buffer | | | | | |
| - | 0 | 0 | | UWord | r |
| Multi-line: yes | Event (see module header) | | siehe Bausteinkopf | | |

| **maxFileLength** | | | | | |
|---|---|---|---|---|---|
| Maximum length of log file | | | | | |
| - | 0 | 0 | | UWord | wr |
| Multi-line: yes | Event (see module header) | | siehe Bausteinkopf | | |

| **maxGrossFileLengthUsed** | | | | | |
|---|---|---|---|---|---|
| For diagnosis: Maximum gross size of log file | | | | | |
| - | 0 | 0 | | UWord | r |
| Multi-line: yes | Event (See module header) | | siehe Bausteinkopf | | |

© Siemens AG 2004 All Rights Reserved

| **maxNetFileLengthTooSmall** | | | | | |
|---|---|---|---|---|---|
| For diagnosis: Number of (net) bytes by which log file is undersized | | | | | |
| - | 0 | 0 | | UWord | r |
| Multi-line: yes | Event (see module header) | | siehe Bausteinkopf | | |

| **numElementsFastFifoTooSmall** | | | | | |
|---|---|---|---|---|---|
| For diagnosis: Number of entries by which the Fifo buffer is undersized | | | | | |
| - | 0 | 0 | | UWord | r |
| Multi-line: yes | Event (see module header) | | siehe Bausteinkopf | | |

| **protocolFilename** | | | | | |
|---|---|---|---|---|---|
| Name of the log file including the path | | | | | |
| - | 0 | | | String[64] | wr |
| Multi-line: yes | Event (see module header) | | siehe Bausteinkopf | | |

| **resultPar1** | | | | | |
|---|---|---|---|---|---|
| General result value, the significance is a function of the event.<br>SYNC_ACT_ACTIVATE, SYNC_ACT_DEACTIVATE, and SYNC_ACT_FIRE: ID of the synchronous action.<br>All non-stated events do not supply this result value. | | | | | |
| - | 0 | | | UWord | r |
| Multi-line: yes | Event (see block header) | | siehe Bausteinkopf | | |

| **skip** | | | | | |
|---|---|---|---|---|---|
| Number of events to be skipped | | | | | |
| - | 0 | 0 | | UWord | wr |
| Multi-line: yes | Event (see module header) | | siehe Bausteinkopf | | |

| **startTriggerLock** | | | | | |
|---|---|---|---|---|---|
| Setting, whether the start trigger is not to be processed during this event.<br>0: Trigger is processed<br>1: Trigger is not processed | | | | | |
| - | 0 | 0 | 1 | UWord | wr |
| Multi-line: no | | | | | |

| **stopTriggerLock** | | | | | |
|---|---|---|---|---|---|
| Setting, whether the stop trigger is not to be processed during this event.<br>0: Trigger is processed<br>1: Trigger is not processed | | | | | |
| - | 0 | 0 | 1 | UWord | wr |
| Multi-line: no | | | | | |

| **suppressProtLock** | | | | | |
|---|---|---|---|---|---|
| Clears the effect of traceProtocolLock<br>0: The disable is active<br>1: The disable is canceled for this event | | | | | |
| - | 0 | 0 | 1 | UWord | wr |
| Multi-line: yes | 1 | | 1 | | |

| **timePeriod** | | | | | |
|---|---|---|---|---|---|
| Time base for cyclic event only | | | | | |
| ms | 0 | 0 | | UWord | r |
| Multi-line: yes | Event (see module header) | | siehe Bausteinkopf | | |

© Siemens AG 2004 All Rights Reserved

# 3.12 MMC/HMI State data

## 3.12.1 Area M, Mod. S: Internal status data MMC

**OEM-MMC: Linkitem** //State/...

Some internal status data of the MMC can be accessed via this module.

| **/Nck/Nck/ActApplication** | | | | | |
|---|---|---|---|---|---|
| Current application for display in MMC | | | | | |
| - | | | | String[32] | wr |
| Multi-line: no | | | | | |

| **/Nck/Nck/ActBag** | | | | | |
|---|---|---|---|---|---|
| Current operating mode for display in MMC | | | | | |
| - | | | | Character | wr |
| Multi-line: no | | | | | |

| **/Nck/Nck/Channel** | | | | | |
|---|---|---|---|---|---|
| Current channel for display in MMC | | | | | |
| - | | | | Character | wr |
| Multi-line: no | | | | | |

| **/Nck/Nck/CoordSystem** | | | | | |
|---|---|---|---|---|---|
| Coordinate system for display in MMC | | | | | |
| - | | | | Character | wr |
| Multi-line: no | | | | | |

■

© Siemens AG 2004 All Rights Reserved

# 4

# 4 Interface Signals

4.1 Data modules (DB) of the PLC application interface ..... 4-718

4.2 Interface signals of the PLC application interface ..... 4-719
4.2.1 Signals from/to machine control panel, M version ..... 4-720
4.2.2 Signals from/to machine control panel, T version ..... 4-722
4.2.3 Signals from/to slimline machine control panel ..... 4-723
4.2.4 Signals from/to handheld unit (HHU) ..... 4-724
4.2.5 Signals from/to handheld programming unit (HPU) ..... 4-726
4.2.6 PLC messages (DB 2) ..... 4-727
4.2.7 Signals to NC (DB 10) ..... 4-731
4.2.8 Signals from/to NCK/MMC (DB 10) ..... 4-736
4.2.9 Signals from/to mode group (DB 11) ..... 4-742
4.2.10 Signals for Safety SPL (safe programmable logic) (DB 18) ..... 4-744
4.2.11 Signals from/to operator panel (DB 19) ..... 4-748
4.2.12 PLC machine data (DB 20) ..... 4-753
4.2.13 Signals from/to NCK channel (DB 21–30) ..... 4-754
4.2.14 Signals from/to axis/spindle (PLC→NCK) (DB 31–DB 61) ..... 4-772
4.2.15 Interface for loading/unloading magazine (DB 71) ..... 4-780
4.2.16 Interface for spindle as change position (DB 72) ..... 4-781
4.2.17 Interface for circular magazine (DB 73) ..... 4-783
4.2.18 Signals to and from the machine control panel and HHU (840Di with MCI2 only) (DB 77) ..... 4-784
4.2.19 Signals to/from ManualTurn, ShopMill, ShopTurn (DB 82) ..... 4-785

© Siemens AG 2004 All Rights Reserved

# 4.1 Data modules (DB) of the PLC application interface

Please find the descriptin of Data modules (DB) of the PLC application interface in chapter 5.3.

© Siemens AG 2004 All Rights Reserved

# 4.2 Interface signals of the PLC application interface

**General**

In the following list of interface signals, a reference to relevant documentation is provided for every signal.
This reference specifies the section number or the short designation of the description of functions, please refer to

**References:** /FB/, xx, ”yyy”

xx Short designation of individual description of functions (e.g.: /A2/)

yyy Name of description of functions (e.g.: ”Various interface signals” or title of the guide)

**Inverse signals**

Signals marked with a ”*” are so-called inverse signals. These signals initiate the appropriate function when a 0 signal appears rather than a 1 signal (e.g. MCP, byte n+2.0: *NC STOP).

**Legend**

- In STEP7, DBB means data module byte
- In STEP7, DBW means data module word (16 bits)
- In STEP7, DBD means data module double word (32 bits)

© Siemens AG 2004 All Rights Reserved

## 4.2.1 Signals from/to machine control panel, M version

| Signals from machine control panel (keys) | | | | | | | | |
|---|---|---|---|---|---|---|---|---|
| **Byte** | Bit 7 | Bit 6 | Bit 5 | Bit 4 | Bit 3 | Bit 2 | Bit 1 | Bit 0 |
| **IB n + 0** | Spindle speed override | | | | Operating mode | | | |
| | D | C | B | A | JOG | TEACH IN | MDA | AUTO |
| **IB n + 1** | Machine function | | | | | | | |
| | REPOS | REF | var. INC | 10000 INC | 1000 INC | 100 INC | 10 INC | 1 INC |
| **IB n + 2** | Key-switch position 0 | Key-switch position 2 | Spindle start | *Spindle stop | Feed start | *Feed stop | NC Start | *NC Stop |
| **IB n + 3** | Reset | Key-switch position 1 | Single block | Feedrate override | | | | |
| | | | | E | D | C | B | A |
| **IB n + 4** | Direction keys | | | Keyswitch position 3 | Direction keys | | | |
| | + R15 | - R13 | Rapid traverse R14 | | x R1 | 4th axis R4 | 7th axis R7 | R10 |
| **IB n + 5** | Axis selection | | | | | | | |
| | Y R2 | Z R3 | 5th axis R5 | Traverse command MCS/WCS R12 | R11 | R9 | 8th axis R8 | 6th axis R6 |
| **IB n + 6** | Unassigned customer keys | | | | | | | |
| | T9 | T10 | T11 | T12 | T13 | T14 | T15 | |
| **IB n + 7** | Unassigned customer keys | | | | | | | |
| | T1 | T2 | T3 | T4 | T5 | T6 | T7 | T8 |

© Siemens AG 2004 All Rights Reserved

| Signals to machine control panel (LEDs) | | | | | | | | |
|---|---|---|---|---|---|---|---|---|
| **Byte** | Bit 7 | Bit 6 | Bit 5 | Bit 4 | Bit 3 | Bit 2 | Bit 1 | Bit 0 |
| **QB n + 0** | Machine function | | | | Operating mode | | | |
| | 1000 INC | 100 INC | 10 INC | 1 INC | JOG | TEACH IN | MDA | AUTO |
| **QB n + 1** | Feed start | *Feed stop | NC Start | *NC Stop | Machine function | | | |
| | | | | | REPOS | REF | var. INC | 10000 INC |
| **QB n + 2** | Axis selection | | | | | Single block | Spindle start | *Spindle stop |
| | Direction key - R13 | X R1 | 4th axis R4 | 7th axis R7 | R10 | | | |
| **QB n + 3** | Axis selection | | | | | | | |
| | Z R3 | 5th axis R5 | Travel command MCS/WCS R12 | R11 | R9 | 8th axis R8 | 6th axis R6 | Direction key + R15 |
| **QB n + 4** | Unassigned customer keys | | | | | | | Y |
| | T9 | T10 | T11 | T12 | T13 | T14 | T15 | R2 |
| **QB n + 5** | Unassigned customer keys | | | | | | | |
| | T1 | T2 | T3 | T4 | T5 | T6 | T7 | T8 |

**Note**

With the SINUMERIK 840D, the machine control panel is assigned to the input/output area by GP parameters; as a standard, initial address 0 is specified for the input and output areas.

With FM-NC, the initial address is set via the SDB 210. For the supplied SDB 210, initial address 120 is specified. If another initial address is desired, this must be specified via the STEP 7 Package Communication Configuration. Note that the GD parameters given automatically through Communication Configuration must be set on the machine control panel.

© Siemens AG 2004 All Rights Reserved

## 4.2.2 Signals from/to machine control panel, T version

| Signals from machine control panel (keys) | | | | | | | | |
|---|---|---|---|---|---|---|---|---|
| **Byte** | Bit 7 | Bit 6 | Bit 5 | Bit 4 | Bit 3 | Bit 2 | Bit 1 | Bit 0 |
| **IB n + 0** | Spindle speed override | | | | Operating mode | | | |
| | D | C | B | A | JOG | TEACH IN | MDA | AUTO |
| **IB n + 1** | Machine function | | | | | | | |
| | REPOS | REF | var. INC | 10000 INC | 1000 INC | 100 INC | 10 INC | 1 INC |
| **IB n + 2** | Keyswitch position 0 | Keyswitch position 2 | Spindle start | *Spindle stop | Feed start | *Feed stop | NC Start | *NC Stop |
| **IB n + 3** | | Keyswitch position 1 | | Feed override | | | | |
| | Reset | | Single block | E | D | C | B | A |
| **IB n + 4** | | | | Keyswitch position 3 | Direction keys | | | |
| | R15 | R13 | R14 | | +Y R1 | -Z R4 | -C R7 | R10 |
| **IB n + 5** | Direction keys | | | | | | | |
| | +X R2 | +C R3 | Rapid traverse override R5 | Travel command MCS/WCS R12 | R11 | -Y R9 | -X R8 | +Z R6 |
| **IB n + 6** | Unassigned customer keys | | | | | | | |
| | T9 | T10 | T11 | T12 | T13 | T14 | T15 | |
| **IB n + 7** | Unassigned customer keys | | | | | | | |
| | T1 | T2 | T3 | T4 | T5 | T6 | T7 | T8 |

| Signals to machine control panel (LEDs) | | | | | | | | |
|---|---|---|---|---|---|---|---|---|
| **Byte** | Bit 7 | Bit 6 | Bit 5 | Bit 4 | Bit 3 | Bit 2 | Bit 1 | Bit 0 |
| **QB n + 0** | Machine function | | | | Operating mode | | | |
| | 1000 INC | 100 INC | 10 INC | 1 INC | JOG | TEACH IN | MDA | AUTO |
| **QB n + 1** | Feed start | *Feed stop | NC Start | *NC Stop | Machine function | | | |
| | | | | | REPOS | REF | var. INC | 10000 INC |
| **QB n + 2** | Direction keys | | | | | Single block | Spindle start | *Spindle stop |
| | R13 | +Y R1 | -Z R4 | -C R7 | R10 | | | |
| **QB n + 3** | Direction keys | | | | | | | |
| | R3 | R5 | Travel command MCS/WCS | R11 | -Y R9 | -X R8 | +Z R6 | R15 |
| **QB n + 4** | Unassigned customer keys | | | | | | | Direction key +X |

© Siemens AG 2004 All Rights Reserved

| | | | | | | | | |
|---|---|---|---|---|---|---|---|---|
| | T9 | T10 | T11 | T12 | T13 | T14 | T15 | R2 |
| **QB n + 5** | Unassigned customer keys | | | | | | | |
| | T1 | T2 | T3 | T4 | T5 | T6 | T7 | T8 |

### 4.2.3 Signals from/to slimline machine control panel

| **Signals from slimline machine control panel** (keys and switches) | | | | | | | | |
|---|---|---|---|---|---|---|---|---|
| **Byte** | Bit 7 | Bit 6 | Bit 5 | Bit 4 | Bit 3 | Bit 2 | Bit 1 | Bit 0 |
| **IB n + 0** | Spindle speed override | | | | Operating mode | | | |
| | *NC Stop | SP - | SP 100% | SP + | SINGLEB | JOG | MDA | AUTOM. |
| **IB n + 1** | Spindle | | | | Keyswitch | Machine function | | |
| | NC Start | SP right | *SP Stop | SP left | SS 3 | REF. | REPOS | Teach in |
| **IB n + 2** | Feedrate | | | Keyswitch | Machine functions | | | |
| | START | *STOP | var. INC | SS 0 | 1000 INC | 100 INC | 10 INC | 1 INC |
| **IB n + 3** | | Keyswitch | | Feed override | | | | |
| | RESET | SS 2 | SS 1 | E | D | C | B | A |
| **IB n + 4** | Direction keys | | | Optional customer keys | | | | |
| | (+) R15 | (-) R13 | Rapid traverse R14 | KT4 | KT3 | KT2 | KT1 | KT0 |
| **IB n + 5** | | | Axis selection | | | | | |
| | T17 | KT5 | 6 | 5 | 4 | Z | Y | X |
| **IB n + 6** | Unassigned customer keys | | | | | | | |
| | T9 | T10 | T11 | T12 | T13 | T14 | T15 | T16 |
| **IB n + 7** | Unassigned customer keys | | | | | | | |
| | T1 | T2 | T3 | T4 | T5 | T6 | T7 | T8 |

© Siemens AG 2004 All Rights Reserved

| **Signals to slimline machine control panel** (LEDs) | | | | | | | | |
|---|---|---|---|---|---|---|---|---|
| **Byte** | Bit 7 | Bit 6 | Bit 5 | Bit 4 | Bit 3 | Bit 2 | Bit 1 | Bit 0 |
| **QB n + 0** | Spindle speed override | | | | Operating mode | | | |
| | NC Stop | SP - | SP 100 % | SP + | SINGLEB | JOG | MDA | AUTOM. |
| **QB n + 1** | Spindle | | | | | Machine function | | |
| | NC Start | SP right | SP Stop | SP left | Unassigned | REF. | REPOS | Teach in |
| **QB n + 2** | Feedrate | | | | Machine functions | | | |
| | START | STOP | var. INC | Unassigned | 1000 INC | 100 INC | 10 INC | 1 INC |
| **QB n + 3** | Unassigned | | | | | | | |
| | Unassigned | Unassigned | Unassigned | Unassigned | Unassigned | Unassigned | Unassigned | Unassigned |
| **QB n + 4** | Direction keys | | | Optional customer keys | | | | |
| | (+) R15 | (-) R13 | Rapid traverse R14 | KT4 | KT3 | KT2 | KT1 | KT0 |
| **QB n + 5** | | | Axis selection | | | | | |
| | T17 | KT5 | 6 | 5 | 4 | Z | Y | X |
| **QB n + 6** | Unassigned customer keys | | | | | | | |
| | T9 | T10 | T11 | T12 | T13 | T14 | T15 | T16 |
| **QB n + 7** | Unassigned customer keys | | | | | | | |
| | T1 | T2 | T3 | T4 | T5 | T6 | T7 | T8 |

## 4.2.4 Signals from/to handheld unit (HHU)

| **Signals from handheld unit (keys)** (input display) | | | | | | | | |
|---|---|---|---|---|---|---|---|---|
| **Byte** | Bit 7 | Bit 6 | Bit 5 | Bit 4 | Bit 3 | Bit 2 | Bit 1 | Bit 0 |
| **IB n + 0** | Reserved | | | | | | | |
| | | | | | | | | |
| **IB n + 1** | Reserved | | | | | | | |
| | | | | | | | | |
| **IB n + 2** | | | | | | | | |
| | T9 | T7 | T6 | T5 | T4 | T3 | T2 | T1 |
| **IB n + 3** | | | | | | | | |
| | T16 | T15 | T14 | T13 | T12 | T11 | T10 | T9 |
| **IB n + 4** | | | | | | | | |
| | T24 | T23 | T22 | T21 | | | | |
| **IB n + 5** | Acknowl-edgement | Keyswitch | Rapid traverse/feed override switch | | | | | |
| | Digital display | | E | D | C | B | A | |

© Siemens AG 2004 All Rights Reserved

| **Signals to handheld unit (LEDs)** (Output display, LEDs) | | | | | | | | |
|---|---|---|---|---|---|---|---|---|
| **Byte** | Bit 7 | Bit 6 | Bit 5 | Bit 4 | Bit 3 | Bit 2 | Bit 1 | Bit 0 |
| **QB n + 0** | always 1 | | | | | | | |
| **QB n + 1** | New data for selected line | | | | | | | Line selection |
| **QB n + 2** | L8 | L7 | L6 | L5 | L4 | L3 | L2 | L1 |
| **QB n + 3** | L16 | L15 | L14 | L13 | L12 | L11 | L10 | L9 |
| HHU digital display | | | | | | | | |
| **QB n + 4** | 1st character (right) of the selected line | | | | | | | |
| **QB n + 5** | 2nd character of the selected line | | | | | | | |
| **QB ...** | | | | | | | | |
| **QB n + 18** | 15th character of the selected line | | | | | | | |
| **QB n + 19** | 16th character (left) of the selected line | | | | | | | |

**Note**
With the SINUMERIK 840D, the handheld unit is connected to the OPI or MCP interface of the PLC.

The initial addresses of the input/output areas and the activation must be set via basic program parameter FB1. With the SINUMERIK 810D and FM-NC, the handheld unit is connected to the MPI interface of the PLC.

The initial addresses of the input/output areas as well as the number of bytes to be transferred must be specified via the STEP 7 Package Communication Configuration.

Note that the GD parameters given automatically through Communication Configuration must be set on the handheld unit.

The parameterization is described in the Installation and Start-Up Guide and in the Description of Functions P3 ”Basic PLC program”.

**References:** /BH/, ”Operator Components Manual”

© Siemens AG 2004 All Rights Reserved

## 4.2.5 Signals from/to handheld programming unit (HPU)

| Signals from machine control panel simulation<br>Interface HPU→PLC | | | | | | | | |
|---|---|---|---|---|---|---|---|---|
| **Byte** | Bit 7 | Bit 6 | Bit 5 | Bit 4 | Bit 3 | Bit 2 | Bit 1 | Bit 0 |
| **IB n + 0** | Function key block | | | | | | | |
| | REF | TEACH | AUTO | MDA | JOG | QUIT | RESET | WCS/MCS |
| **IB n + 1** | Function key block | | | | | | | |
| | | FCT15 | FCT14 | BigFct | FCT12 | FCT11 | INC | REPOS |
| **IB n + 2** | JOG keys positive direction | | | | | | | |
| | | If 1:<br>Ax1-Ax6=<br>Ax7-Ax12 | Ax6 | Ax5 | Ax4 | Ax3 | Ax2 | Ax1 |
| **IB n + 3** | JOG keys negative direction | | | | | | | |
| | | | Ax6 | Ax5 | Ax4 | Ax3 | Ax2 | Ax1 |
| **IB n + 4** | Shift keys | | | | | | | |
| | Signal | Diagno | Service | System | Param | Correct | Progr. | Mach. |
| **IB n + 5** | Shift keys | | | | | | | |
| | BF16 | BF15 | BF14 | BF13 | BF12 | Step | Modify | Insert |
| **IB n + 6** | Start key block | | | | | | | |
| | Res. | HT 6 | VAL+ | VAL- | SF2 | SF1 | START | STOP |
| **IB n + 7** | | | | | | | | |

© Siemens AG 2004 All Rights Reserved

| Signals to machine control panel simulation<br>Interface PLC→HPU | | | | | | | | |
|---|---|---|---|---|---|---|---|---|
| **Byte** | Bit 7 | Bit 6 | Bit 5 | Bit 4 | Bit 3 | Bit 2 | Bit 1 | Bit 0 |
| **QB n + 0** | Function key block | | | | | | | |
| | REF | TEACH | AUTO | MDA | JOG | QUIT | RESET | WCS/MCS |
| **QB n + 1** | Function key block | | | | | | | |
| | | FCT15 | FCT14 | BigFct | FCT12 | FCT11 | INC | REPOS |
| **QB n + 2** | | Axes 7–12 selected | JOG keys positive direction | | | | | |
| **QB n + 2** | | | | | | | | |
| | | | Ax6 | Ax5 | Ax4 | Ax3 | Ax2 | Ax1 |
| **QB n + 3** | JOG keys negative direction | | | | | | | |
| | For WCS: No MCS Ax4 to Ax6 | | Ax6 | Ax5 | Ax4 | Ax3 | Ax2 | Ax1 |
| **QB n + 4** | Shift keys | | | | | | | |
| | Signal | Diagno | Service | System | Param | Correct | Progr. | Mach. |
| **QB n + 5** | Shift keys | | | | | | | |
| | BF16 | BF15 | BF14 | BF13 | BF12 | Step | Modify | Insert |
| **QB n + 6** | Start key block | | | | | | | |
| | | | VAL+ | VAL- | SF2 | SF1 | START | STOP |
| **QB n + 7** | | | | | | | | |

## 4.2.6 PLC messages (DB 2)

| **DB2** | **Signals for PLC messages (PLC→MMC), /P3/** | | | | | | | |
|---|---|---|---|---|---|---|---|---|
| **Byte** | Bit 7 | Bit 6 | Bit 5 | Bit 4 | Bit 3 | Bit 2 | Bit 1 | Bit 0 |
| | Channel 1 | | | | | | | |
| **0** | 510007 | 510006 | 510005 | 510004 | 510003 | 510002 | 510001 | 510000 |
| | Feed disable (alarm no.: 510000–510015) | | | | | | | |
| **1** | 510015 | 510014 | 510013 | 510012 | 510011 | 510010 | 510009 | 510008 |
| **2** | Feed and read-in disable byte1 (alarm no.: 510100–510131) | | | | | | | |
| **3** | Feed and read-in disable byte 2 (alarm no.: 510108–510115) | | | | | | | |
| **4** | Feed and read-in disable byte 3 (alarm no.: 510116–510123) | | | | | | | |
| **5** | Feed and read-in disable byte 4 (alarm no.: 510124–510131) | | | | | | | |
| **6** | Read-in disable byte 1 (alarm no.: 510200–510207) | | | | | | | |
| **7** | Read-in disable byte 2 (alarm no.: 510208–510215) | | | | | | | |

© Siemens AG 2004 All Rights Reserved

| | | | | | | | | |
|---|---|---|---|---|---|---|---|---|
| **8** | Read-in disable byte 3 (alarm no.: 510216–510223) | | | | | | | |
| **9** | Read-in disable byte 4 (alarm no.: 510224–510231) | | | | | | | |
| **10** | NC Start disable byte 1 (alarm no.: 510300–510307) | | | | | | | |
| **11** | NC Start disable byte 2 (alarm no.: 510308–510315) | | | | | | | |
| **12** | Feed stop GEOaxis 1 byte 1 (alarm no.: 511100–511107) | | | | | | | |
| **13** | Feed stop GEOaxis 1 byte 2 (alarm no.: 511108–511115) | | | | | | | |
| **14** | Feed stop GEOaxis 2 byte 1 (alarm no.: 511200–511207) | | | | | | | |
| **15** | Feed stop GEOaxis 2 byte 2 (alarm no.: 511208–511215) | | | | | | | |
| **16** | Feed stop GEOaxis 3 byte 1 (alarm no.: 511300–511307) | | | | | | | |
| **17** | Feed stop GEOaxis 3 byte 2 (alarm no.: 511308–511315) | | | | | | | |
| | Channel 2 | | | | | | | |
| **18** | 520007 | 520006 | 520005 | 520004 | 520003 | 520002 | 520001 | 520000 |
| | Feed disable (alarm no.: 520000-520015) | | | | | | | |
| **19** | 520015 | 520014 | 520013 | 520012 | 520011 | 520010 | 520009 | 520008 |
| **20-23** | Feed and read-in disable byte 1-4 (alarm no.: 520100–520131) | | | | | | | |
| **24-27** | Read-in disable byte 1-4 (alarm no.: 520200–520231) | | | | | | | |
| **28-29** | NC Start disable byte 1-2 (alarm no.: 520300–520315) | | | | | | | |
| **30-31** | Feed stop GEOaxis 1 byte 1-2 (alarm no.: 521100-521115) | | | | | | | |
| **32-33** | Feed stop GEOaxis 2 byte 1-2 (alarm no.: 521200-521215) | | | | | | | |
| **34-35** | Feed stop GEOaxis 3 byte 1-2 (alarm no.: 521300-521315) | | | | | | | |
| **36-143** | As from channel 3, please refer to the following table | | | | | | | |

**Channel areas in DB2**

| Area | Address | Signal number |
|---|---|---|
| Channel 1, see above | DBX 0.0 - DBX 11.7 | 510.000 - 510.231 |
| Channel 1, geo axes | DBX 12.0 - DBX 17.7 | 511.100 - 511.315 |
| Channel 2, see above | DBX 18.0 - DBX 29.7 | 520.000 - 520.231 |
| Channel 2, geo axes | DBX 30.0 - DBX 35.7 | 521.100 - 521.315 |
| Channel 3 | DBX 36.0 - DBX 47.7 | 530.000 - 530.231 |
| Channel 3, geo axes | DBX 48.0 - DBX 53.7 | 531.100 - 531.315 |
| Channel 4 | DBX 54.0 - DBX 65.7 | 540.000 - 540.231 |
| Channel 4, geo axes | DBX 66.0 - DBX 71.7 | 541.100 - 541.315 |
| Channel 5 | DBX 72.0 - DBX 83.7 | 550.000 - 550.231 |
| Channel 5, geo axes | DBX 84.0 - DBX 89.7 | 551.100 - 551.315 |
| Channel 6 | DBX 90.0 - DBX 101.7 | 560.000 - 560.231 |
| Channel 6, geo axes | DBX 102.0 - DBX 107.7 | 561.100 - 561.315 |
| Channel 7 | DBX 108.0 - DBX 119.7 | 570.000 - 570.231 |
| Channel 7, geo axes | DBX 120.0 - DBX 125.7 | 571.100 - 571.315 |
| Channel 8 | DBX 126.0 - DBX 137.7 | 580.000 - 580.231 |
| Channel 8, geo axes | DBX 138.0 - DBX 143.7 | 581.100 - 581.315 |
| Channel 9, channel 10 in SW 5 not implemented | | |

© Siemens AG 2004 All Rights Reserved

**Axis areas in DB2**

| | Axis/spindle | | | | | | | |
|---|---|---|---|---|---|---|---|---|
| **144** | 600107 | 600106 | 600105 | 600104 | 600103 | 600102 | 600101 | 600100 |
| | Feed stop/spindle stop (alarm no.: 600100-600015) for axis/spindle 1 | | | | | | | |
| **145** | 600115 | 600114 | 600113 | 600112 | 600111 | 600110 | 600109 | 600108 |
| **146-147** | Feed stop/spindle stop (alarm no.: 600200-600215) for axis/spindle 2 | | | | | | | |
| **148-149** | Feed stop/spindle stop (alarm no.: 600300-600315) for axis/spindle 3 | | | | | | | |
| **150-151** | Feed stop/spindle stop (alarm no.: 600400-600415) for axis/spindle 4 | | | | | | | |
| **152-153** | Feed stop/spindle stop (alarm no.: 600500-600515) for axis/spindle 5 | | | | | | | |
| **154-155** | Feed stop/spindle stop (alarm no.: 600600-600615) for axis/spindle 6 | | | | | | | |
| **156-157** | Feed stop/spindle stop (alarm no.: 600700-600715) for axis/spindle 7 | | | | | | | |
| **158-159** | Feed stop/spindle stop (alarm no.: 600800-600815) for axis/spindle 8 | | | | | | | |
| **160-161** | Feed stop/spindle stop (alarm no.: 600900-600915) for axis/spindle 9 | | | | | | | |
| **162-163** | Feed stop/spindle stop (alarm no.: 601000-601015) for axis/spindle 10 | | | | | | | |
| **164-165** | Feed stop/spindle stop (alarm no.: 601100-601115) for axis/spindle 11 | | | | | | | |
| **166-167** | Feed stop/spindle stop (alarm no.: 601200-601215) for axis/spindle 12 | | | | | | | |
| **168-169** | Feed stop/spindle stop (alarm no.: 601300-601315) for axis/spindle 13 | | | | | | | |
| **170-171** | Feed stop/spindle stop (alarm no.: 601400-601415) for axis/spindle 14 | | | | | | | |
| **172-173** | Feed stop/spindle stop (alarm no.: 601500-601515) for axis/spindle 15 | | | | | | | |
| **174-175** | Feed stop/spindle stop (alarm no.: 601600-601615) for axis/spindle 16 | | | | | | | |
| **176-177** | Feed stop/spindle stop (alarm no.: 601700-601715) for axis/spindle 17 | | | | | | | |
| **178-179** | Feed stop/spindle stop (alarm no.: 601800-601815) for axis/spindle 18 | | | | | | | |
| | Axes 19 -31 not implemented | | | | | | | |

**User areas**

| | User area 0 Bytes 1 - 8 | | | | | | | |
|---|---|---|---|---|---|---|---|---|
| **180** | 700007 | 700006 | 700005 | 700004 | 700003 | 700002 | 700001 | 700000 |
| **...** | User area 0 (alarm no.: 700000-700063) | | | | | | | |
| **187** | 700063 | 700062 | 700061 | 700060 | 700059 | 700058 | 700057 | 700056 |
| **188-195** | User area 1 Bytes 1 - 8 (alarm no.: 700100-700163) | | | | | | | |
| **...** | | | | | | | | |
| **372-379** | User area 24 Bytes 1 - 8 (alarm no.: 702400-702463) | | | | | | | |

© Siemens AG 2004 All Rights Reserved

**Note**

In DB2, the assignment is made between message/alarm number, text and area identifier. All alarm or message bits are automatically transferred to the user interface (channel, axis/spindle) through appropriate parameter settings. If these parameter settings are not made, the bit transfer must be programmed in the user program. The user interface can be further influenced after the block for the error/operational messages has been called. Only signals of the channels and axes declared in the NC machine data can be transferred and texts displayed.

The user must acknowledge all error messages generated. Operational messages are displayed only for as long as the relevant condition prevails.

The number of user areas can be parameterized via FB 1.

DB2/DB3 must be deleted after changing the configuration (FB1: MsgUser).

| **Definition of error and operational messages /P3/** | | | | | | | |
|---|---|---|---|---|---|---|---|
| Byte no. of DB2 / Error message EM or operational message OM | | | | | | | |
| 7 / EM | 6 / EM | 5 / OM | 4 / OM | 3 / EM | 2 / EM | 1 / OM | 0 / EM |
| 15 / OM | 14 / EM | 13 / OM | 12 / EM | 11 / OM | 10 / EM | 9 / OM | 8 / OM |
| 23 / OM | 22 / OM | 21 / EM | 20 / EM | 19 / OM | 18 / EM | 17 / OM | 16 / EM |
| 31 / OM | 30 / EM | 29 / OM | 28 / EM | 27 / OM | 26 / OM | 25 / EM | 24 / EM |
| | | | | 35 / OM | 34 / EM | 33 / OM | 32 / EM |
| 151 / OM | 150 / EM | 149 / OM | 148 / EM | 147 / OM | 146 / EM | 145 / OM | 144 / EM |
| 159 / OM | 158 / EM | 157 / OM | 156 / EM | 155 / OM | 154 / EM | 153 / OM | 152 / EM |
| 187 / OM | 186 / OM | 185 / OM | 184 / OM | 183 / EM | 182 / EM | 181 / EM | 180 / EM |
| 195 / OM | 194 / OM | 193 / OM | 192 / OM | 191 / EM | 190 / EM | 189 / EM | 188 / EM |

**Example**

The alarms numbered from 510200 to 510207 can be generated via DB2, DBB6 (read-in disable channel 1). These alarms are defined as error messages as standard.

© Siemens AG 2004 All Rights Reserved

### 4.2.7 Signals to NC (DB 10)

## On-board input and output signals from NCK

| DB10 | Signals to NC (PLC→NC) | | | | | | | |
|---|---|---|---|---|---|---|---|---|
| **Byte** | Bit 7 | Bit 6 | Bit 5 | Bit 4 | Bit 3 | Bit 2 | Bit 1 | Bit 0 |
| DBB **0** | Disabling of digital NCK inputs /A2/ (SW 2 and higher) | | | | | | | |
| | Digital inputs without hardware #) | | | | On-board inputs §) | | | |
| | Input 8 | Input 7 | Input 6 | Input 5 | Input 4 | Input 3 | Input 2 | Input 1 |
| DBB **1** | Setting of digital NCK inputs from PLC (SW 2 and higher) | | | | | | | |
| | Digital inputs without hardware #) | | | | On-board inputs §) | | | |
| | Input 8 | Input 7 | Input 6 | Input 5 | Input 4 | Input 3 | Input 2 | Input 1 |
| DBB **2, 3 unas-signed** | | | | | | | | |
| DBB **4** | Disabling of digital NCK outputs /A2/ (SW 2 and higher) | | | | | | | |
| | Digital outputs without hardware #) | | | | On-board outputs §) | | | |
| | Output 8 | Output 7 | Output 6 | Output 5 | Output 4 | Output 3 | Output 2 | Output 1 |
| DBB **5** | Overwrite screenform of digital NCK /A2/ outputs (SW 2 and higher) | | | | | | | |
| | Digital outputs without hardware #) | | | | On-board outputs §) | | | |
| | Output 8 | Output 7 | Output 6 | Output 5 | Output 4 | Output 3 | Output 2 | Output 1 |
| DBB **6** | Setting value of digital NCK outputs from PLC /A2/ (SW 2 and higher) | | | | | | | |
| | Digital outputs without hardware #) | | | | On-board outputs §) | | | |
| | Output 8 | Output 7 | Output 6 | Output 5 | Output 4 | Output 3 | Output 2 | Output 1 |
| DBB **7** | Input screenform of digital NCK outputs /A2/ (SW 2 and higher) | | | | | | | |
| | Digital outputs without hardware #) | | | | On-board outputs §) | | | |
| | Output 8 | Output 7 | Output 6 | Output 5 | Output 4 | Output 3 | Output 2 | Output 1 |
| DBB **8-29** | Machine axis number table for FC 19, 24, 25, 26 (1st MCP) | | | | | | | |
| DBB **30** from SW 6 | Upper limit of machine axis numbers for FC 19, 24 (1st MCP) With 0, the max. number of machine axis numbers applies | | | | | | | |
| DBB **32-53** from SW 6 | Machine axis number table for FC 19, 24, 25, 26 (2nd MCP) | | | | | | | |
| DBB **54** from SW 6 | Upper limit of machine axis numbers for FC 19, 24 (2nd MCP) With 0, the max. number of machine axis numbers applies | | | | | | | |

© Siemens AG 2004 All Rights Reserved

**Note**

#) Bits 4-7 of the digital input and NCK outputs can be processed by the PLC even though there are no hardware I/Os available for this. Therefore, these bits can be used in addition to the information exchange between NCK and PLC.

§) On the 840D, the digital inputs and outputs 1 to 4 of the NCK are physically on-board. On the FM-NC, there are no hardware I/Os for bit 0 to bit 3. These can be processed by the PLC according to #).

The external I/O signals from the NCK have been shifted to the range starting with DBB122.

## General signals to NCK (DB10)

| DB10 | Signals to NC (PLC→NC) | | | | | | | |
|---|---|---|---|---|---|---|---|---|
| **Byte** | Bit 7 | Bit 6 | Bit 5 | Bit 4 | Bit 3 | Bit 2 | Bit 1 | Bit 0 |
| DBB **56** | Keyswitch /A2/ | | | | | Acknowl. EMER-GENCY STOP /N2/ | EMER-GENCY STOP /N2/ | |
| | Position 3 | Position 2 | Position 1 | Position 0 | | | | |
| DBB **57** | | | | | PC shutdown Only 840Di evaluated | | | INC inputs in mode group area active |
| DBB **58 - 59** | | | | | | | | |

## External digital inputs of the NCK (DB10)

| DB10 | Signals to NC (PLC -> NCK) | | | | | | | |
|---|---|---|---|---|---|---|---|---|
| **Byte** | Bit 7 | Bit 6 | Bit 5 | Bit 4 | Bit 3 | Bit 2 | Bit 1 | Bit 0 |
| DBB **122** | Disable the external digital NCK inputs (SW 2 and higher) | | | | | | | |
| | Input 16 | Input 15 | Input 14 | Input 13 | Input 12 | Input 11 | Input 10 | Input 9 |
| DBB **123** | Values from the PLC for the external digital NCK inputs (SW 2 and higher) | | | | | | | |
| | Input 16 | Input 15 | Input 14 | Input 13 | Input 12 | Input 11 | Input 10 | Input 9 |
| DBB **124** | Disable the external digital NCK inputs (SW 2 and higher) | | | | | | | |
| | Input 24 | Input 23 | Input 22 | Input 21 | Input 20 | Input 19 | Input 18 | Input 17 |
| DBB **125** | Values from the PLC for the external digital NCK inputs (SW 2 and higher) | | | | | | | |
| | Input 24 | Input 23 | Input 22 | Input 21 | Input 20 | Input 19 | Input 18 | Input 17 |
| DBB **126** | Disable the external digital NCK inputs (SW 2 and higher) | | | | | | | |
| | Input 32 | Input 31 | Input 30 | Input 29 | Input 28 | Input 27 | Input 26 | Input 25 |
| DBB **127** | Values from the PLC for the external digital NCK inputs (SW 2 and higher) | | | | | | | |
| | Input 32 | Input 31 | Input 30 | Input 29 | Input 28 | Input 27 | Input 26 | Input 25 |

© Siemens AG 2004 All Rights Reserved

| | | | | | | | | |
|---|---|---|---|---|---|---|---|---|
| DBB **128** | Disable the external digital NCK inputs (SW 2 and higher) | | | | | | | |
| | Input 40 | Input 39 | Input 38 | Input 37 | Input 36 | Input 35 | Input 34 | Input 33 |
| DBB **129** | Values from the PLC for the external digital NCK inputs (SW 2 and higher) | | | | | | | |
| | Input 40 | Input 39 | Input 38 | Input 37 | Input 36 | Input 35 | Input 34 | Input 33 |

## External digital outputs of the NCK (DB10)

| **DB10** | **Signals to NC (PLC -> NCK)** | | | | | | | |
|---|---|---|---|---|---|---|---|---|
| **Byte** | Bit 7 | Bit 6 | Bit 5 | Bit 4 | Bit 3 | Bit 2 | Bit 1 | Bit 0 |
| DBB **130** | Disable the external digital NCK outputs (SW 2 and higher) | | | | | | | |
| | Output 16 | Output 15 | Output 14 | Output 13 | Output 12 | Output 11 | Output 10 | Output 9 |
| DBB **131** | Overwrite screenform for the external digital NCK outputs (SW 2 and higher) | | | | | | | |
| | Output 16 | Output 15 | Output 14 | Output 13 | Output 12 | Output 11 | Output 10 | Output 9 |
| DBB **132** | Value from the PLC for the external digital NCK outputs (SW 2 and higher) | | | | | | | |
| | Output 16 | Output 15 | Output 14 | Output 13 | Output 12 | Output 11 | Output 10 | Output 9 |
| DBB **133** | Default screenform for the external digital NCK outputs (SW 2 and higher) | | | | | | | |
| | Output 16 | Output 15 | Output 14 | Output 13 | Output 12 | Output 11 | Output 10 | Output 9 |
| DBB **134** | Disable the external digital NCK outputs (SW 2 and higher) | | | | | | | |
| | Output 24 | Output 23 | Output 22 | Output 21 | Output 20 | Output 19 | Output 18 | Output 17 |
| DBB **135** | Overwrite screenform for the external digital NCK outputs (SW 2 and higher) | | | | | | | |
| | Output 24 | Output 23 | Output 22 | Output 21 | Output 20 | Output 19 | Output 18 | Output 17 |
| DBB **136** | Value from the PLC for the external digital NCK outputs (SW 2 and higher) | | | | | | | |
| | Output 24 | Output 23 | Output 22 | Output 21 | Output 20 | Output 19 | Output 18 | Output 17 |
| DBB **137** | Default screenform for the external digital NCK outputs (SW 2 and higher) | | | | | | | |
| | Output 24 | Output 23 | Output 22 | Output 21 | Output 20 | Output 19 | Output 18 | Output 17 |
| DBB **138** | Disable the external digital NCK outputs (SW 2 and higher) | | | | | | | |
| | Output 32 | Output 31 | Output 30 | Output 29 | Output 28 | Output 27 | Output 26 | Output 25 |
| DBB **139** | Overwrite screenform for the external digital NCK outputs (SW 2 and higher) | | | | | | | |
| | Output 32 | Output 31 | Output 30 | Output 29 | Output 28 | Output 27 | Output 26 | Output 25 |

© Siemens AG 2004 All Rights Reserved

| | | | | | | | | |
|---|---|---|---|---|---|---|---|---|
| DBB **140** | Value from the PLC for the external digital NCK outputs (SW 2 and higher) | | | | | | | |
| | Output 32 | Output 31 | Output 30 | Output 29 | Output 28 | Output 27 | Output 26 | Output 25 |
| DBB **141** | Default screenform for the external digital NCK outputs (SW 2 and higher) | | | | | | | |
| | Output 32 | Output 31 | Output 30 | Output 29 | Output 28 | Output 27 | Output 26 | Output 25 |
| DBB **142** | Disable the external digital NCK outputs (SW 2 and higher) | | | | | | | |
| | Output 40 | Output 39 | Output 38 | Output 37 | Output 36 | Output 35 | Output 34 | Output 33 |
| DBB **143** | Overwrite screenform for the external digital NCK outputs (SW 2 and higher) | | | | | | | |
| | Output 40 | Output 39 | Output 38 | Output 37 | Output 36 | Output 35 | Output 34 | Output 33 |
| DBB **144** | Value from the PLC for the external digital NCK outputs (SW 2 and higher) | | | | | | | |
| | Output 40 | Output 39 | Output 38 | Output 37 | Output 36 | Output 35 | Output 34 | Output 33 |
| DBB **145** | Default screenform for the external digital NCK outputs (SW 2 and higher) | | | | | | | |
| | Output 40 | Output 39 | Output 38 | Output 37 | Output 36 | Output 35 | Output 34 | Output 33 |

## Analog inputs of the NCK (external) (DB10)

| **DB10** | **Signals to NC (PLC -> NCK)** | | | | | | | |
|---|---|---|---|---|---|---|---|---|
| **Byte** | Bit 7 | Bit 6 | Bit 5 | Bit 4 | Bit 3 | Bit 2 | Bit 1 | Bit 0 |
| DBB **146** | Disable the analog NCK inputs | | | | | | | |
| | Input 8 | Input 7 | Input 6 | Input 5 | Input 4 | Input 3 | Input 2 | Input 1 |
| DBB **147** | Specified analog value for NCK from PLC | | | | | | | |
| | Input 8 | Input 7 | Input 6 | Input 5 | Input 4 | Input 3 | Input 2 | Input 1 |
| DBW **148** | Setpoint from PLC for analog input 1 of NCK | | | | | | | |
| DBW **150** | Setpoint from PLC for analog input 2 of NCK | | | | | | | |
| DBW **152** | Setpoint from PLC for analog input 3 of NCK | | | | | | | |
| DBW **154** | Setpoint from PLC for analog input 4 of NCK | | | | | | | |
| DBW **156** | Setpoint from PLC for analog input 5 of NCK | | | | | | | |
| DBW **158** | Setpoint from PLC for analog input 6 of NCK | | | | | | | |
| DBW **160** | Setpoint from PLC for analog input 7 of NCK | | | | | | | |
| DBW **162** | Setpoint from PLC for analog input 8 of NCK | | | | | | | |
| DBB **164,165** | Unassigned | | | | | | | |

© Siemens AG 2004 All Rights Reserved

## Analog outputs of the NCK (external) (DB10)

| DB10 | Signals to NCK (PLC -> NCK) | | | | | | | |
|---|---|---|---|---|---|---|---|---|
| **Byte** | Bit 7 | Bit 6 | Bit 5 | Bit 4 | Bit 3 | Bit 2 | Bit 1 | Bit 0 |
| DBB **166** | Overwrite screenform for the analog NCK outputs | | | | | | | |
| | Output 8 | Output 7 | Output 6 | Output 5 | Output 4 | Output 3 | Output 2 | Output 1 |
| DBB **167** | Default screenform for the analog NCK outputs | | | | | | | |
| | Output 8 | Output 7 | Output 6 | Output 5 | Output 4 | Output 3 | Output 2 | Output 1 |
| DBB **168** | Disable the analog NCK outputs | | | | | | | |
| | Output 8 | Output 7 | Output 6 | Output 5 | Output 4 | Output 3 | Output 2 | Output 1 |
| DBB **169** | RESERVED | | | | | | | |
| | | | | | | | | |
| DBW **170** | Setpoint from PLC for analog output 1 of NCK | | | | | | | |
| DBW **172** | Setpoint from PLC for analog output 2 of NCK | | | | | | | |
| DBW **174** | Setpoint from PLC for analog output 3 of NCK | | | | | | | |
| DBW **176** | Setpoint from PLC for analog output 4 of NCK | | | | | | | |
| DBW **178** | Setpoint from PLC for analog output 5 of NCK | | | | | | | |
| DBW **180** | Setpoint from PLC for analog output 6 of NCK | | | | | | | |
| DBW **182** | Setpoint from PLC for analog output 7 of NCK | | | | | | | |
| DBW **184** | Setpoint from PLC for analog output 8 of NCK | | | | | | | |

© Siemens AG 2004 All Rights Reserved

## 4.2.8 Signals from/to NCK/MMC (DB 10)

## On-board NCK inputs and outputs (DB 10)

| DB10 | Signals from (NCK -> PLC) | | | | | | | |
|---|---|---|---|---|---|---|---|---|
| **Byte** | Bit 7 | Bit 6 | Bit 5 | Bit 4 | Bit 3 | Bit 2 | Bit 1 | Bit 0 |
| DBB **60** | | | | | Actual value of the digital ON-BOARD inputs of the NCK (SW 2 and higher)<br>On-board inputs §) | | | |
| | | | | | Input 4 | Input 3 | Input 2 | Input 1 |
| DBB **61-63** | | | | | | | | |
| DBB **64** | Setpoint for the digital outputs of the NCK without hardware | | | | Setpoint for the digital on-board outputs of the NCK | | | |
| | Output 8 | Output 7 | Output 6 | Output 5 | Output 4 | Output 3 | Output 2 | Output 1 |
| DBB **65-67** | | | | Unassigned | | | | |
| DBB **68** | Handwheel 1 moved | | | | | | | |
| DBB **69** | Handwheel 2 moved | | | | | | | |
| DBB **70** | Handwheel 3 moved | | | | | | | |
| DBB **71** | Modification counter inch/metric system of units | | | | | | | |
| DBB **72**<br>HT6 from SW 6.1.51 | Status of the actual value display indicated (1st MCP) | | | | | | Machine/ Work | Valid display |
| DBB **73**<br>HT6 from SW 6.1.51 | Status of the actual value display indicated (2nd MCP) | | | | | | Machine/ Work | Valid display |
| DBB **74-79**<br>HT6 from SW 6.1.51 | Machine axis numbers of the displayed axes (1st MCP)<br>MCP1AxisFromHMI | | | | | | | |
| DBB **80-85**<br>HT6 from SW 6.1.51 | Machine axis numbers of the displayed axes (2nd MCP)<br>MCP2AxisFromHMI | | | | | | | |
| DBB **86** | Reserved | | | | | | | |
| DBB **88** | Reserved | | | | | | | |

© Siemens AG 2004 All Rights Reserved

**Note**

#) Although no associated hardware I/Os exist, the PLC can process bits 4-7 of the digital inputs and NCK outputs. Consequently, these bits can also be used to transfer information between the NCK and the PLC.

§) The digital inputs and outputs 1 to 4 of the NCK exist as on-board hardware for the 840D. No hardware I/Os are available for bits 0-3 of the FM-NC. In accordance with #), these can be processed by the PLC.

## Selection/status signals from MMC (DB 10)

| DB 10 | Signals from NC (NCK→PLC) | | | | | | | |
|---|---|---|---|---|---|---|---|---|
| **Byte** | Bit 7 | Bit 6 | Bit 5 | Bit 4 | Bit 3 | Bit 2 | Bit 1 | Bit 0 |
| DBB **90** | | | | | | | | |
| DBB **91** | | | | | | | | |
| DBB **92** | free | | | | | | | |
| DBB **93** | free | | | | | | | |
| DBB **94** | free | | | | | | | |
| DBB **95** | free | | | | | | | |
| DBB **96** | free | | | | | | | |
| DBB **97** MMC--> PLC | | | | | Channel number for handwheel 1 /H1/ (SW 2 and higher) | | | |
| | | | | | D | C | B | A |
| DBB **98** MMC--> PLC | | | | | Channel number for handwheel 2 /H1/ (SW 2 and higher) | | | |
| | | | | | D | C | B | A |
| DBB **99** MMC--> PLC | | | | | Channel number for handwheel 3 /H1/ (SW 4.1 and higher) | | | |
| | | | | | D | C | B | A |
| DBB **100** MMC--> PLC | | | | Axis number for handwheel 1 /H1/ (SW 2 and higher) | | | | |
| | Machine axis | Handwheel selected | Contour handwheel | E | D | C | B | A |
| DBB **101** MMC--> PLC | | | | Axis number for handwheel 2 /H1/ (SW 2 and higher) | | | | |
| | Machine axis | Handwheel selected | Contour handwheel | E | D | C | B | A |
| DBB **102** | | | | Axis number for handwheel 3 /H1/ (SW 4.1 and higher) | | | | |

© Siemens AG 2004 All Rights Reserved

| MMC--> PLC | Machine axis | Handwheel selected | Contour handwheel | E | D | C | B | A |
|---|---|---|---|---|---|---|---|---|
| DBB **103** MMC--> PLC | MMC-101/102 battery alarm | MMC tempera-ture limit | AT box ready | | | | | Remote diagnosis active /FBFE/ |

© Siemens AG 2004 All Rights Reserved

## General signals from NCK (DB 10)

| DB 10 | Signals from NC (NCK→PLC) | | | | | | | |
|---|---|---|---|---|---|---|---|---|
| **Byte** | Bit 7 | Bit 6 | Bit 5 | Bit 4 | Bit 3 | Bit 2 | Bit 1 | Bit 0 |
| DBB **104** | NCK CPU ready /A2/ | | | | | HHU ready | MCP 2 ready | MCP 1 ready |
| DBB **105** | Unassigned | | | | | | | |
| DBB **106** | | | | | | | EMERGEN -CY STOP active /N2/ | |
| DBB **107** | Inch system | NCU-link active | | | | | Probe actuated /M4/ Probe 2 | Probe 1 |
| DBB **108** | NC ready /A2/ | Drive ready /FBA/ | Drives in cyclic operation | | MMC-CPU Ready (MMC to OPI) /A2/ | MMC CPU Ready (MMC to MPI) /A2/ | MMC2 CPU ready E_MMC2 Ready | |
| DBB **109** | NCK battery alarm /A2/ | Air temp. alarm /A2/ | Heat sink temp. alarm NCU 573 | PC operating system fault | | | | NCK alarm present /A2/ |
| DBB **110** | Software cams minus (SW 2 and higher) /N3/ | | | | | | | |
| | 7 | 6 | 5 | 4 | 3 | 2 | 1 | 0 |
| DBB **111** | Software cams minus (SW 2 and higher) /N3/ | | | | | | | |
| | 15 | 14 | 13 | 12 | 11 | 10 | 9 | 8 |
| DBB **112** | Software cams minus (SW 4.1 and higher) /N3/ | | | | | | | |
| | 23 | 22 | 21 | 20 | 19 | 18 | 17 | 16 |
| DBB **113** | Software cams minus (SW 4.1 and higher) /N3/ | | | | | | | |
| | 31 | 30 | 29 | 28 | 27 | 26 | 25 | 24 |
| DBB **114** | Software cams plus (SW 2 and higher) /N3/ | | | | | | | |
| | 7 | 6 | 5 | 4 | 3 | 2 | 1 | 0 |
| DBB **115** | Software cams plus (SW 2 and higher) /N3/ | | | | | | | |
| | 15 | 14 | 13 | 12 | 11 | 10 | 9 | 8 |
| DBB **116** | Software cams plus (SW 4.1 and higher) /N3/ | | | | | | | |
| | 23 | 22 | 21 | 20 | 19 | 18 | 17 | 16 |
| DBB **117** | Software cams plus (SW 4.1 and higher) /N3/ | | | | | | | |
| | 31 | 30 | 29 | 28 | 27 | 26 | 25 | 24 |

© Siemens AG 2004 All Rights Reserved

**Note**

Concerning **NCK CPU Ready (DBX 104.7):**

This signal is the sign-of-life monitoring function for the NC. It must be included in the safety circuit of the machine.

Concerning **MMC CPU1 READY (DBX 108.3 and DBX 108.2):**

If the MMC is connected to the operator panel interface (X 101), bit 3 is set (default). When connecting to the PG MPI interface (X 122), bit 2 is set.

## External digital input and output signals of the NCK (DB 10)

| DB 10 | Signals from NCK (NCK→PLC), /A2/ (SW2 and higher) | | | | | | | |
|---|---|---|---|---|---|---|---|---|
| **Byte** | Bit 7 | Bit 6 | Bit 5 | Bit 4 | Bit 3 | Bit 2 | Bit 1 | Bit 0 |
| DBB **186** | Actual value of external digital NCK inputs | | | | | | | |
| | Input 16 | Input 15 | Input 14 | Input 13 | Input 12 | Input 11 | Input 10 | Input 9 |
| DBB **187** | Actual value of external digital NCK inputs | | | | | | | |
| | Input 24 | Input 23 | Input 22 | Input 21 | Input 20 | Input 19 | Input 18 | Input 17 |
| DBB **188** | Actual value of external digital NCK inputs | | | | | | | |
| | Input 32 | Input 31 | Input 30 | Input 29 | Input 28 | Input 27 | Input 26 | Input 25 |
| DBB **189** | Actual value of external digital NCK inputs | | | | | | | |
| | Input 40 | Input 39 | Input 38 | Input 37 | Input 36 | Input 35 | Input 34 | Input 33 |
| DBB **190** | NCK setpoint for external digital NCK outputs | | | | | | | |
| | Output 16 | Output 15 | Output 14 | Output 13 | Output 12 | Output 11 | Output 10 | Output 9 |
| DBB **191** | NCK setpoint for external digital NCK outputs | | | | | | | |
| | Output 24 | Output 23 | Output 22 | Output 21 | Output 20 | Output 19 | Output 18 | Output 17 |
| DBB **192** | NCK setpoint for external digital NCK outputs | | | | | | | |
| | Output 32 | Output 31 | Output 30 | Output 29 | Output 28 | Output 27 | Output 26 | Output 25 |
| DBB **193** | NCK setpoint for external digital NCK outputs | | | | | | | |
| | Output 40 | Output 39 | Output 38 | Output 37 | Output 36 | Output 35 | Output 34 | Output 33 |

© Siemens AG 2004 All Rights Reserved

## Analog input and output signals of the NCK (DB 10)

| DB 10 | Signals from NCK (NCK→PLC), /A2/ (SW2 and higher) | | | | | | | |
|---|---|---|---|---|---|---|---|---|
| **Byte** | Bit 7 | Bit 6 | Bit 5 | Bit 4 | Bit 3 | Bit 2 | Bit 1 | Bit 0 |
| DBW **194** | Actual value for analog input 1 of the NCK | | | | | | | |
| DBW **196** | Actual value for analog input 2 of the NCK | | | | | | | |
| DBW **198** | Actual value for analog input 3 of the NCK | | | | | | | |
| DBW **200** | Actual value for analog input 4 of the NCK | | | | | | | |
| DBW **202** | Actual value for analog input 5 of the NCK | | | | | | | |
| DBW **204** | Actual value for analog input 6 of the NCK | | | | | | | |
| DBW **206** | Actual value for analog input 7 of the NCK | | | | | | | |
| DBW **208** | Actual value for analog input 8 of the NCK | | | | | | | |
| DBW **210** | Setpoint for analog output 1 of the NCK | | | | | | | |
| DBW **212** | Setpoint for analog output 2 of the NCK | | | | | | | |
| DBW **214** | Setpoint for analog output 3 of the NCK | | | | | | | |
| DBW **216** | Setpoint for analog output 4 of the NCK | | | | | | | |
| DBW **218** | Setpoint for analog output 5 of the NCK | | | | | | | |
| DBW **220** | Setpoint for analog output 6 of the NCK | | | | | | | |
| DBW **222** | Setpoint for analog output 7 of the NCK | | | | | | | |
| DBW **224** | Setpoint for analog output 8 of the NCK | | | | | | | |

© Siemens AG 2004 All Rights Reserved

## 4.2.9 Signals from/to mode group (DB 11)

### Mode group-specific signals (DB 11)

| DB 11 | Signals to mode group 1 (PLC→NCK) /K1/ | | | | | | | |
|---|---|---|---|---|---|---|---|---|
| **Byte** | Bit 7 | Bit 6 | Bit 5 | Bit 4 | Bit 3 | Bit 2 | Bit 1 | Bit 0 |
| DBB **0** | Mode group reset | Mode group stop Axes plus spindle | Mode group stop | Mode change disable | | Operating mode | | |
| | | | | | | JOG | MDA | AUTO-MATIC |
| DBB **1** | Single block | | | | | Machine function | | |
| | Type A | Type B | | | | REF | REPOS | TEACH IN |
| DBB **2** | Machine function | | | | | | | |
| | | | var. INC | 10000 INC | 1000 INC | 100 INC | 10 INC | 1 INC |
| DBB **3** | | | | | | | | |

**Note**

about **machine function**: machine function defined centrally when signal "INC inputs in mode group area active" (DB10.DBX57.0) is set.

| DB 11 | Signals from mode group 1 (NCK→PLC) /K1/ | | | | | | | |
|---|---|---|---|---|---|---|---|---|
| **Byte** | Bit 7 | Bit 6 | Bit 5 | Bit 4 | Bit 3 | Bit 2 | Bit 1 | Bit 0 |
| DBB **4** MMC--> PLC | | | | | | Strobe mode | | |
| | | | | | | JOG | MDA | AUTOM. |
| DBB **5** MMC--> PLC | | | | | | Strobe machine function | | |
| | | | | | | REF | REPOS | TEACH IN |
| DBB **6** | All channels in reset state | | | | Mode group ready | Active operating mode | | |
| | | | | | | JOG | MDA | AUTOM. |
| DBB **7** | | | | | Digitizing | Active machine function | | |
| | | | | | | REF | REPOS | TEACH IN |

© Siemens AG 2004 All Rights Reserved

| DB 11 | Signals to mode group 2 (PLC→NCK) /K1/ | | | | | | | |
|---|---|---|---|---|---|---|---|---|
| **Byte** | Bit 7 | Bit 6 | Bit 5 | Bit 4 | Bit 3 | Bit 2 | Bit 1 | Bit 0 |
| DBB **20** | Mode group reset | Mode group stop Axes plus spindle | Mode group stop | Mode change disable | | Operating mode | | |
| | | | | | | JOG | MDA | AUTO-MATIC |
| DBB **21** | Single block | | | | | Machine function | | |
| | Type A | Type B | | | | REF | REPOS | TEACH IN |
| DBB **22** | Machine function | | | | | | | |
| | | | var. INC | 10000 INC | 1000 INC | 100 INC | 10 INC | 1 INC |
| DBB **23** | Unassigned | | | | | | | |

**Note**

about **machine function**: machine function defined centrally when signal "INC inputs in mode group area active" (DB10.DBX57.0) is set.

| DB 11 | Signals from mode group 2 (NCK→PLC) /K1/ | | | | | | | |
|---|---|---|---|---|---|---|---|---|
| **Byte** | Bit 7 | Bit 6 | Bit 5 | Bit 4 | Bit 3 | Bit 2 | Bit 1 | Bit 0 |
| DBB **24** MMC--> PLC | | | | | | Strobe mode | | |
| | | | | | | JOG | MDA | AUTO-MATIC |
| DBB **25** MMC--> PLC | | | | | | Strobe machine function | | |
| | | | | | | REF | REPOS | TEACH IN |
| DBB **26** | All channels in reset state | | | | Mode group ready | Active operating mode | | |
| | | | | | | JOG | MDA | AUTO-MATIC |
| DBB **27** | | | | | Digitizing /FBD/ (SW 2 and higher) | Active machine function | | |
| | | | | | | REF | REPOS | TEACH IN |
| DBB **28** | Machine functions | | | | | | | |
| | | | var. INC | 10000 INC | 1000 INC | 100 INC | 10 INC | 1 INC |

© Siemens AG 2004 All Rights Reserved

**Note**

The other mode groups (mode group 3 to mode group 10) are also located in DB 11 with the following initial bytes:

| | |
|---|---|
| Mode group 3: DBB 40 | Mode group 7: DBB 120 |
| Mode group 4: DBB 60 | Mode group 8: DBB 140 |
| Mode group 5: DBB 80 | Mode group 9: DBB 160 |
| Mode group 6: DBB 100 | Mode group 10: DBB 180 |

### 4.2.10 Signals for Safety SPL (safe programmable logic) (DB 18)

## Parameterization section

**References:** /FBSI/, SINUMERIK Safety Integrated

| DB 18 | Signals for Safety SPL (PLC → PLC) | | | | | | | |
|---|---|---|---|---|---|---|---|---|
| **Byte** | Bit 7 | Bit 6 | Bit 5 | Bit 4 | Bit 3 | Bit 2 | Bit 1 | Bit 0 |
| DBB **0** | INSEP valid (valid bit) | | | | | | | |
| | 8th input byte | 7th input byte | 6th input byte | 5th input byte | 4th input byte | 3rd input byte | 2nd input byte | 1st input byte |
| DBB **1** | | | | | | | | |
| DBB **2** | OUTSEP valid (valid bit) | | | | | | | |
| | 8th output byte | 7th output byte | 6th output byte | 5th output byte | 4th output byte | 3rd output byte | 2nd output byte | 1st output byte |
| DBB **3** | | | | | | | | |
| DBW **4** | INSEP_ADDR (address 1st input byte) | | | | | | | |
| DBW **6** | INSEP_ADDR (address 2nd input byte) | | | | | | | |
| DBW **8** | INSEP_ADDR (address 3rd input byte) | | | | | | | |
| DBW **10** | INSEP_ADDR (address 4th input byte) | | | | | | | |
| DBW **12** | INSEP_ADDR (address 5th input byte) | | | | | | | |
| DBW **14** | INSEP_ADDR (address 6th input byte) | | | | | | | |
| DBW **16** | INSEP_ADDR (address 7th input byte) | | | | | | | |
| DBW **18** | INSEP_ADDR (address 8th input byte) | | | | | | | |

© Siemens AG 2004 All Rights Reserved

| | | | | | | | | |
|---|---|---|---|---|---|---|---|---|
| DBW **20** | OUTSEP_ADDR (address 1st output byte) | | | | | | | |
| DBW **22** | OUTSEP_ADDR (address 2nd output byte) | | | | | | | |
| DBW **24** | OUTSEP_ADDR (address 3rd output byte) | | | | | | | |
| DBW **26** | OUTSEP_ADDR (address 4th output byte) | | | | | | | |
| DBW **28** | OUTSEP_ADDR (address 5th output byte) | | | | | | | |
| DBW **30** | OUTSEP_ADDR (address 6th output byte) | | | | | | | |
| DBW **32** | OUTSEP_ADDR (address 7th output byte) | | | | | | | |
| DBW **34** | OUTSEP_ADDR (address 8th output byte) | | | | | | | |
| DBB **36** | | | | | | | Stop E | SPL READY |
| DBB **37** | | | | | | | | |

## Data area / error

| **DB 18** | **Signals for Safety SPL (PLC ←→ NCK)** | | | | | | | |
|---|---|---|---|---|---|---|---|---|
| **Byte** | Bit 7 | Bit 6 | Bit 5 | Bit 4 | Bit 3 | Bit 2 | Bit 1 | Bit 0 |
| | Data area for SPL inputs/outputs | | | | | | | |
| DBD **38** | SPL_DATA.INSEP [1..32] | | | | | | | |
| DBD **42** | SPL_DATA.INSEP [33..64] | | | | | | | |
| DBD **46** | SPL_DATA.OUTSEP [1..32] | | | | | | | |
| DBD **50** | SPL_DATA.OUTSEP [33..64] | | | | | | | |
| | Data area for user SPL | | | | | | | |
| DBD **54** | SPL_DATA.INSIP [1..32] | | | | | | | |
| DBD **58** | SPL_DATA.INSIP [33..64] | | | | | | | |
| DBD **62** | SPL_DATA.OUTSIP [1..32] | | | | | | | |
| DBD **66** | SPL_DATA.OUTSIP [33..64] | | | | | | | |

© Siemens AG 2004 All Rights Reserved

| DB 18 | Signals for Safety SPL (PLC ←→ NCK) | | | | | | | |
|---|---|---|---|---|---|---|---|---|
| **Byte** | Bit 7 | Bit 6 | Bit 5 | Bit 4 | Bit 3 | Bit 2 | Bit 1 | Bit 0 |
| DBD **70** | SPL_DATA.MARKERSIP [1..32] | | | | | | | |
| DBD **74** | SPL_DATA.MARKERSIP [33..64] | | | | | | | |

| | Difference in level between NCK and PLC for diagnostics | | | | | | | |
|---|---|---|---|---|---|---|---|---|
| DBD **78** | SPL_DELTA.INSEP [1..32] | | | | | | | |
| DBD **82** | SPL_DELTA.INSEP [33..64] | | | | | | | |
| DBD **86** | SPL_DELTA.OUTSEP [1..32] | | | | | | | |
| DBD **90** | SPL_DELTA.OUTSEP [33..64] | | | | | | | |
| DBD **94** | SPL_DELTA.INSIP [1..32] | | | | | | | |
| DBD **98** | SPL_DELTA.INSIP [33..64] | | | | | | | |
| DBD **102** | SPL_DELTA.OUTSIP [1..32] | | | | | | | |
| DBD **106** | SPL_DELTA.OUTSIP [33..64] | | | | | | | |
| DBD **110** | SPL_DELTA.MARKERSIP [1..32] | | | | | | | |
| DBD **114** | SPL_DELTA.MARKERSIP [33..64] | | | | | | | |
| DBD **118** | | | | | | | | CMDSI |
| DBD **119** | | | xxxxxxxx | | | | | |
| DBD **120** | Error number<br>0 = no error<br>1 - 320 = Signal number starting from SPL_DATA.INSEP [1] | | | | | | | |
| DBD **124** | Level indicator of cross-checking<br>(diagnostics option: how many SPL signals currently differ in level) | | | | | | | |

© Siemens AG 2004 All Rights Reserved

## Supplementary data areas

| DB 18 | Signals for Safety SPL (PLC ←→ NCK) | | | | | | | |
|---|---|---|---|---|---|---|---|---|
| **Byte** | Bit 7 | Bit 6 | Bit 5 | Bit 4 | Bit 3 | Bit 2 | Bit 1 | Bit 0 |
| | Data area for single-channel inputs/outputs | | | | | | | |
| DBB **128** | $A_PLCSIOUT [1 .. 8] | | | | | | | |
| DBB **129** | $A_PLCSIOUT [9 .. 16] | | | | | | | |
| DBB **130** | $A_PLCSIOUT [17 .. 24] | | | | | | | |
| DBB **131** | $A_PLCSIOUT [25 .. 32] | | | | | | | |
| DBB **132** | $A_PLCSIIN [1.. 8] | | | | | | | |
| DBB **133** | $A_PLCSIIN [9 .. 16] | | | | | | | |
| DBB **134** | $A_PLCSIIN [17 .. 24] | | | | | | | |
| DBB **135** | $A_ PLCSIIN [25 .. 32] | | | | | | | |
| DBB **136** | SPL status | | | | | | | |
| DBB **138** | PROFIsafe module(s) for 8th input byte | 7th input byte | 6th input byte | 5th input byte | 4th input byte | 3rd input byte | 2nd input byte | 1st input byte |
| DBB **139** | | | | | | | | |
| DBB **140** | PROFIsafe module(s) for 8th output byte | 7th output byte | 6th output byte | 5th output byte | 4th output byte | 3rd output byte | 2nd output byte | 1st output byte |
| DBB **141** | | | | | | | | |
| | Teststop data | | | | | | | |
| DBB **142** to DBB **149** | Number of axes per TeststopBlock 1 (NoOfAxisPerBlock[1]) … Number of axes per TeststopBlock 8 (NoOfAxisPerBlock[8]) | | | | | | | |
| DBB **150** to DBB **157** | Pointer onto axis table 1 (BlockPointer[1]) … Pointer onto axis table 8 (BlockPointer[8]) | | | | | | | |
| DBB **158** to DBB **188** | Safety axis table (AxisTable[1]) 1st axis … Safety axis table (AxisTable[31]) 31st axis | | | | | | | |

© Siemens AG 2004 All Rights Reserved

## 4.2.11 Signals from/to operator panel (DB 19)

| DB 19 | Signals to operator panel (PLC→MMC) | | | | | | | |
|---|---|---|---|---|---|---|---|---|
| **Byte** | Bit 7 | Bit 6 | Bit 5 | Bit 4 | Bit 3 | Bit 2 | Bit 1 | Bit 0 |
| DBB **0** | Actual value in WCS 0=MCS /A2/ | Back up travel recorder | MMC shutdown (for OEM users) | Clear recall alarms (MMC 103 only) | Clear cancel alarms (MMC 103 only) | Key disable /A2/ | Screen darkening /A2/ | Screen bright /A2/ |
| DBB **1** | Reserved | | | | | | | |
| DBW **2** | Higraph first error display | | | | | | | |
| DBW **4** | Higraph first error display | | | | | | | |
| DBB **6** | Analog spindle 1, capacity in percent | | | | | | | |
| DBB **7** | Analog spindle 2, capacity in percent | | | | | | | |
| DBB **8** | Channel number of machine control panel to MMC | | | | | | | |
| DBB **9** | Reserved for selection | | | | | Automatc tool measure-ment | OEM2 | OEM1 |
| DBB **10** | PLC Hardkeys (Values 1 ... 255, Default: 0 ) | | | | | | | |
| DBB **11** | Reserved for hardkey function expansions | | | | | | | |
| DBB **12** | RS-232 On /A2/ | RS-232 Off /A2/ | RS-232 External /A2/ | RS-232 Stop /A2/ | COM1 /A2/ | COM2 /A2/ | Res. | Res. |
| DBB **13** | Select /A2/ | Load part program /A2/ | Unload /A2/ | Res. | | | | Disable Teach transfer |
| DBB **14** | 0=act. FS 1=pas. FS | RS-232 act. FS: Index of file to be transferred in the standard list. RS-232 pass. FS: Number of the control file for user file names. | | | | | | |
| DBB **15** | RS-232 act. FS: Index that specifies the axis, channel or tool no. RS-232 pass. FS: Index of the file to be transferred in the user list | | | | | | | |
| DBB **16** | 1=pas FS | Part program handling: Number of the control file for user file names. | | | | | | |
| DBB **17** | Part program handling: Index of the file to be transferred in the user list | | | | | | | |
| DBB **18** | | | | | | | | TO comp. |
| DBB **19** | Reserved (signal counter) | | | | | | | |

© Siemens AG 2004 All Rights Reserved

| DB 19 | Signals from operator panel (MMC → PLC) | | | | | | | |
|---|---|---|---|---|---|---|---|---|
| **Byte** | Bit 7 | Bit 6 | Bit 5 | Bit 4 | Bit 3 | Bit 2 | Bit 1 | Bit 0 |
| DBB **20** | MCS/WCS Change-over /A2/ | Simulation active /A2/ | Language 2 | Recall alarm cleared MMC 103 /A2/ | Cancel alarm cleared MMC 103 /A2/ | Cancel key actuated /A2/ | Screen is dark /A2/ | |
| DBB **21** | Active MMC operating area | | | | | | | |
| DBB **22** | Displayed channel number from the MMC /A2/ | | | | | | | |
| DBB **23** | | | | | | | Counter spindle internal voltage | Main spindle internal voltage |
| DBB **24** | RS-232 status from PLC | | | | | | | |
| | RS-232 On /A2/ | RS-232 Off /A2/ | RS-232 External /A2/ | RS-232 Stop /A2/ | Com1 active /A2/ | Com2 active /A2/ | OK /A2/ | Error /A2/ |
| DBB **25** | Error RS-232 /A2/ | | | | | | | |
| | | | | | | | | |
| DBB **26** | Part program handling status /A2/ | | | | | | | |
| | Select | Load | Unload | | Active | Error MMC 5.3 and higher; 6.1 | OK | Error |
| DBB **27** | Error program handling /A2/ | | | | | | | |
| | | | | | | | | |
| DBW **28** | Mask number for "Extend user interface" /IAM/, BE1 | | | | | | | |
| DBB **30** | Control bits PLC --> MMC | | | | | | | |
| | | | | | | | Exit mask | Request mask |
| DBB **31** | Control bits PLC --> MMC | | | | | | | |
| | Inactive bit | | | Error, Not possible to request mask | Mask exited | Mask active | Mask requested | Mask request accepted |
| DBB **32** | FunctionSelectionNo. from PLC | | | | | | | |
| PLC>MMC | Busy function | Strobe function | | | | | | |
| DBB **33** | Parameter 1 for FunctionSelectionNo. (function selection from DBB 32) | | | | | | | |
| PLC>MMC | | | | | | | | |
| DBB **34** | Parameter 2 for FunctionSelectionNo. (function selection from DBB 32) | | | | | | | |
| PLC>MMC | | | | | | | | |

© Siemens AG 2004 All Rights Reserved

| | |
|---|---|
| DBB **35** PLC>MMC | Parameter 3 for FunctionSelectionNo. (function selection from DBB 32) |
| DBB **36** MMC>PLC | Error code for FunctionSelectionNo. (function selection from DBB 32) |
| DBB **37** MMC>PLC | Parameter 1 for FunctionSelectionNo. (function selection from DBB 48) |
| DBB **38** MMC>PLC | Parameter 2 for FunctionSelectionNo. (function selection from DBB 48) |
| DBB **39** MMC>PLC | Parameter 3 for FunctionSelectionNo. (function selection from DBB 48) |

DBB40-47 used internally

| | | | |
|---|---|---|---|
| DBB **48** MMC>PLC | PLC-Busy function | HMI-Strobe function | FunctionSelectionNo. from MMC |
| DBB **49** PLC>MMC | Error code for FunctionSelectionNo. (function selection from DBB48) | | |

| | |
|---|---|
| | Interface 2nd MMC |
| DBB **50-99** | Assignment as for DBB 0 to DBB 49<br>Switchover interface to MMC |
| | Knocking interface (MMC announces itself to NCU) |
| DBW **100** | ONL_REQUEST /B3/<br>Online request from MMC<br>MMC writes its client identification as online request (bit 8-15: bus type, bit 0-7: MMC bus address) |

| | |
|---|---|
| DBW **102** | ONL_CONFIRM /B3/<br>Acknowledgment from PLC to online request<br>PLC writes MMC client identification as acknowledgment (bus type, MMC bus address; as with DBW 100). |
| DBW **104** | PAR_CLIENT_IDENT /B3/<br>MMC writes its client identification (bus type, MMC bus address; as with DBW 100). |
| DBB **106** | PAR_MMC_TYP /B3/<br>Type of MMC as per NETNAMES.INI: Main / subordinate operator panel / server /... |
| DBB **107** | PAR_MSTT_ADR /B3/<br>MMC writes address of MCP to be activated; 255, when no MCP activated |
| DBB **108** | PAR_STATUS /B3/<br>PLC writes online enable for MMC. |

© Siemens AG 2004 All Rights Reserved

| | | | | | | | | |
|---|---|---|---|---|---|---|---|---|
| DBB **109** | PAR_Z_INFO /B3/<br>PLC writes additional info about status | | | | | | | |
| DBB **110** | M_TO_N_ALIVE<br>Sign of life from PLC to MMC through M to N block | | | | | | | |

| | **Online interface MMC 1 (user)** | | | | | | | |
|---|---|---|---|---|---|---|---|---|
| DBW **120** | MMC1_CLIENT_IDENT /B3/<br>PLC writes PAR_CLIENT_IDENT to MMCx_CLIENT_IDENT when MMC goes online. | | | | | | | |
| DBB **122** | MMC1_TYP /B3/<br>PLC writes PAR_MMC_TYP to MMCx_TYP when MMC goes online. | | | | | | | |
| DBB **123** | MMC1_MSTT_ADR /B3/<br>PLC writes PAR_MSTT_ADR to MMCx_MSTT_ADR when MMC goes online. | | | | | | | |
| DBB **124** | MMC1_STATUS /B3/<br>Connection status, MMC and PLC alternately write their requests/acknowledgments | | | | | | | |
| DBB **125** | MMC1_Z_INFO /B3/<br>Additional info connection status (pos./neg. acknowledgment, error messages...) | | | | | | | |
| DBB **126** | | | MMC1 ACTIVE DENIED /B3/ | MMC1 ACTIVE CHANGED /B3/ | MMC1 ACTIVE PERM /B3/ | MMC1 ACTIVE REQ /B3/ | MMC1 MCP SHIFT LOCK /B3/ | MMC1 SHIFT LOCK /B3/ |
| DBB **127-129** | Reserved | | | | | | | |

© Siemens AG 2004 All Rights Reserved

| Online Interface MMC 2 (user) | | | | | | | | |
|---|---|---|---|---|---|---|---|---|
| DBW **130** | MMC2_CLIENT_IDENT /B3/<br>PLC writes PAR_CLIENT_IDENT to MMCx_CLIENT_IDENT when MMC goes online. | | | | | | | |
| DBB **132** | MMC2_TYP /B3/<br>PLC writes PAR_MMC_TYP to MMCx_TYP when MMC goes online. | | | | | | | |
| DBB **133** | MMC2_MSTT_ADR /B3/<br>PLC writes PAR_MSTT_ADR to MMCx_MSTT_ADR when MMC goes online. | | | | | | | |
| DBB **134** | MMC2_STATUS /B3/<br>Connection status, MMC and PLC alternately write their requests/acknowledgments | | | | | | | |
| DBB **135** | MMC2_Z_INFO /B3/<br>Additional info connection status (pos./neg. acknowledgment, error messages...) | | | | | | | |
| DBB **136** | | | MMC2 ACTIVE DENIED /B3/ | MMC2 ACTIVE CHANGED /B3/ | MMC2 ACTIVE PERM /B3/ | MMC2 ACTIVE REQ /B3/ | MMC2 MCP SHIFT LOCK /B3/ | MMC2 SHIFT LOCK /B3/ |
| DBB **137-139** | Reserved | | | | | | | |
| DBB **140-197** | Code carrier input parameters<br>Optional package SINTDC on HMI-Advanced required | | | | | | | |
| DBB **198-249** | Code carrier return parameters<br>Optional package SINTDC on HMI-Advanced required | | | | | | | |
| DBB **250-255** | Commands<br>Optional package SINTDC on HMI-Advanced required | | | | | | | |
| DBB **256-267** | Commands for Paramtm.exe<br>Optional package SINTDC on HMI-Advanced required | | | | | | | |
| **DBW 268** | Traffic light status<br>Optional package TPM on HMI Advanced required | | | | | | | |
| **DBW 270 to 394** | Counter[1 ... 32]<br>Optional package TPM on HMI Advanced required | | | | | | | |

© Siemens AG 2004 All Rights Reserved

## 4.2.12 PLC machine data (DB 20)

| DB 20 | PLC machine data (PLC→operator) | | | | | | | |
|---|---|---|---|---|---|---|---|---|
| **Byte** | Bit 7 | Bit 6 | Bit 5 | Bit 4 | Bit 3 | Bit 2 | Bit 1 | Bit 0 |
| DBW 0 | INT values | | | | | | | |
| DBW | | | | | | | | |
| DBW | INT values | | | | | | | |
| DBB | Bit arrays | | | | | | | |
| DBB | | | | | | | | |
| DBB | Bit arrays | | | | | | | |
| DBD | REAL values | | | | | | | |
| DBD | | | | | | | | |
| DBD | REAL values | | | | | | | |

**Note**

The initial and end addresses of the PLC machine data areas depend on the respective length indications of the partial areas. In general, the integer values start with the data byte 0. The upper limit is determined by the corresponding length indication. In general, the following bit arrays (2-decade hexadecimal numbers on input) start with the following even address. The real values follow directly the bit arrays and also start with an even address.

© Siemens AG 2004 All Rights Reserved

## 4.2.13 Signals from/to NCK channel (DB 21–30)

| DB 21 - 30 | Signals to NCK channel (PLC→NCK) | | | | | | | |
|---|---|---|---|---|---|---|---|---|
| **Byte** | Bit 7 | Bit 6 | Bit 5 | Bit 4 | Bit 3 | Bit 2 | Bit 1 | Bit 0 |
| DBB **0** | | Activate dry run feedrate /V1/ | Activate M01 /K1/ | Activate single block /K1/ | Activate DRF /H1/ | | | |
| DBB **1** | Activate program test /K1/ | PLC action complete /K1/ | CLC override /TE1/ | CLC stop /TE1/ | Time monitoring act. (tool manage-ment) | Synchron-ized action OFF /FBSY/ | Enable protection zones /A3/ | Activate referencing /R1/ |
| DBB **2** | Skip block /K1/ | | | | | | | |
| | /7 | /6 | /5 | /4 | /3 | /2 | /1 | /0 |
| DBB **3** | Nibbling and punching /N4/ | | | | | | | |
| | | | Manual release of stroke 2 | Stroke delayed /N4/ | Stroke not operating /N4/ | Stroke suppres-sion /N4/ | Manual stroke enable /N4/ | Stroke enable /N4/ |
| DBB **4** | Feedrate override /V1/ | | | | | | | |
| | H | G | F | E | D | C | B | A |
| DBB **5** | Rapid traverse override /V1/ | | | | | | | |
| | H | G | F | E | D | C | B | A |
| DBB **6** | Feedrate override active /V1/ | Rapid traverse override active /V1/ | | Program level abort /K1/ | Delete subroutine no. of passes | Delete distance-to-go /A2/ | Read-in disable /K1/ | Feed disable /V1/ |
| DBB **7** | Reset /K1/ | | | NC Stop axes plus spindle /K1/ | NC Stop /K1/ | NC Stop to block limit /K1/ | NC Start /K1/ | NC Start disable /K1/ |
| DBB **8** | Activate machine-related protection area /A3/ (SW 2 and higher) | | | | | | | |
| | Area 8 | Area 7 | Area 6 | Area 5 | Area 4 | Area 3 | Area 2 | Area 1 |
| DBB **9** | Activate machine-related protection area /A3/ (SW 2 and higher) | | | | | | | |
| | | | | | | | Area 10 | Area 9 |
| DBB **10** | Activate channel-specific protection area /A3/ (SW 2 and higher) | | | | | | | |
| | Area 8 | Area 7 | Area 6 | Area 5 | Area 4 | Area 3 | Area 2 | Area 1 |
| DBB **11** | Activate channel-specific protection area /A3/ (SW 2 and higher) | | | | | | | |
| | | | | | | | Area 10 | Area 9 |

© Siemens AG 2004 All Rights Reserved

**Note**

on **Feedrate override active (DBX6.7)**
even if feedrate override is not active (= 100%), the setting 0% is effective.
on **Feedrate override (DBB 4)**
either 31 positions (Gray code) with 31 MD for % evaluation or 0-200% corresponding to the dual value in byte (201–255 ⇒ max. 200%).
on **Rapid traverse override (DBB 5)**
either 31 positions (Gray code) with 31 MD for % evaluation or 0-100% corresponding to the dual value in byte (101–255 ⇒ max. 100%).
on **Activate single block (DBX0.4)**
select variant via ”Write variable”.
on **Delete distance-to-go (DBX6.2)**
effects only path axes and not positioning axes

## Control signals to geometry axes

| | | | | | | | | |
|---|---|---|---|---|---|---|---|---|
| DBB **12** | Geometry axis 1 | | | | | | | |
| | Traversing keys /H1/ | | Rapid traverse override /H1/ | Traversing key disable /H1/ | Feed stop /V1/ | Activate handwheel /H1/ | | |
| | + | - | | | | 3 | 2 | 1 |
| DBB **13** | Geometry axis 1 machine function /H1/ | | | | | | | |
| | | | Var. INC | 10000 INC | 1000 INC | 100 INC | 10 INC | 1 INC |
| DBB **14** | OEM signals geometry axis 1 | | | | | | | |
| | | | | | | | | |
| DBB **15** | Geometry axis 1 | | | | | | | |
| | | | | | | | | |
| DBB **16** | Geometry axis 2 | | | | | | | |
| | Traversing keys /H1/ | | Rapid traverse override /H1/ | Traversing key disable /H1/ | Feed stop /V1/ | Activate handwheel /H1/ | | |
| | + | - | | | | 3 | 2 | 1 |
| DBB **17** | Geometry axis 2 machine function /H1/ | | | | | | | |
| | | | Var. INC | 10000 INC | 1000 INC | 100 INC | 10 INC | 1 INC |
| DBB **18** | OEM signals geometry axis 2 | | | | | | | |
| | | | | | | | | |
| DBB **19** | Geometry axis 2 | | | | | | | |
| | | | | | | | | |
| DBB **20** | Geometry axis 3 | | | | | | | |
| | Traversing keys /H1/ | | Rapid traverse override /H1/ | Traversing key disable /H1/ | Feed stop /V1/ | Activate handwheel /H1/ | | |
| | + | - | | | | 3 | 2 | 1 |
| DBB **21** | Geometry axis 3 machine function /H1/ | | | | | | | |
| | | | Var. INC | 10000 INC | 1000 INC | 100 INC | 10 INC | 1 INC |

© Siemens AG 2004 All Rights Reserved

| | | | | | | | | |
|---|---|---|---|---|---|---|---|---|
| DBB **22** | OEM signals geometry axis 3 | | | | | | | |
| DBB **23** | Geometry axis 3 | | | | | | | |

**Note**

about **machine function**: machine function only defined when signal "INC inputs in mode group area active" (DB10.DBX57.0) is not set.

## Operating signals from MMC/status signals from NC channel

| **DB 21-30** | **Signals from NCK channel (NCK→PLC, MMC→PLC, PLC→NCK)** | | | | | | | |
|---|---|---|---|---|---|---|---|---|
| **Byte** | Bit 7 | Bit 6 | Bit 5 | Bit 4 | Bit 3 | Bit 2 | Bit 1 | Bit 0 |
| DBB **24** MMC--> PLC | | Dry run feedrate selected /V1/ | M01 selected /K1/ | Select NCK-related M01 | DRF selected /H1/ | | | |
| DBB **25** MMC--> PLC | Program test selected /K1/ | | | REPOS MODE EDGE | Feedrate override for rapid traverse selected /V1/ | REPOSPATHMODE 2 | 1 | 0 |
| DBB **26** MMC--> PLC | Skip block selected /K1/ (SW 2 and higher) 7 | 6 | 5 | 4 | 3 | 2 | 1 | 0 |
| DBB **27** MMC--> PLC | | | | | | | Skip block selected /K1/ (SW 2 and higher) | Skip block selected /K1/ (SW 2 and higher) |
| DBB **28** PLC→NCK | OEM channel signals | | | | | | | |
| DBB **29** PLC→NCK | Do not disable tool | Switch off wear monitoring | Switch off workpiece counter | Activate PTP motion | Activate fixed feed 4 /FBMA/, /V1/ (SW 4 and higher) | Activate fixed feed 3 /FBMA/, /V1/ (SW 4 and higher) | Activate fixed feed 2 /FBMA/, /V1/ (SW 4 and higher) | Activate fixed feed 1 /FBMA/, /V1/ (SW 4 and higher) |

© Siemens AG 2004 All Rights Reserved

| | | | | | | | | |
|---|---|---|---|---|---|---|---|---|
| DBB **30** PLC→NCK | Activate contour handwheel | | | | | | | |
| | No tool change commands | | Activate NCK-related M01 /H2/ | Neg. direction simulation contour handwheel | Simulation contour handwheel on | Handwheel 3 | Handwheel 2 | Handwheel 1 |
| DBB **31** **PLC→NCK** | | | | | | REPOSPATHMODE | | |
| | Skip block active /9 | Skip block active /8 | | REPOS MODE EDGE | | 2 | 1 | 0 |
| DBB **32** NCK--> PLC | | Last action block active /K1/ | M00/M01 active /K1/ | Approach block active /K1/ | Action block active /K1/ | | | Execution from external source active |
| DBB **33** NCK--> PLC | Program test active /K1/ | Transformation active /K1/M1 | M02/M30 active /K1/ | Block search active /K1/ | Handwheel override active (SW 2 and higher) /H1/ | Revolutio-nal feedrate active /V1/ | Orientable toolholder active | Referencing active /R1/ |
| DBB **34** NCK--> PLC | OEM channel signals feedback | | | | | | | |
| | | | | | | | | |
| DBB **35** NCK--> PLC | Channel status /K1/ | | | Program status /K1/ | | | | |
| | Reset | Interrupted | Active | Aborted | Interrupted | Stopped | Waiting | Running |
| DBB **36** NCK--> PLC | NCK alarm with processing stop present /A2/ | Channel-specific NCK alarm present /A2/ | Channel ready for operation in SW 4 and higher | Interrupt processing active /K1/ | All axes stationary /B1/ | All axes requiring reference points are referenced /R1/ | | |
| DBB **37** NCK--> PLC | Stop | Read-in | CLC | CLC | CLC | Contour handwheel active | | |
| | at block end with SBL is sup-pressed | enable is ignored | stopped upper limit /TE1/ | stopped lower limit /TE1/ | active /TE1/ | Handwheel 3 /H1/ | Handwheel 2 /H1/ | Handwheel 1 /H1/ |
| DBB **38** NCK--> PLC | Nibbling and punching /N4/ | | | | | | | |
| | | | | | | | Acknowl. manual stroke enable /N4/ | Stroke enable active /N4/ |
| DBB **39** NCK--> PLC | | | | | | | | Protection zones not guaranteed |

© Siemens AG 2004 All Rights Reserved

**Note**

on **Feedrate override for rapid traverse selected (DBX25.3)**

Depending on this signal, the basic PLC program copies the feedrate override onto the rapid traverse override on the channel-specific interface.

On **Program test selected (DBX25.7)**

"Program test selected" means axis disable for all channel axes and spindles.

## Status signals of geometry axes

| DB 21 - 30 | Signals from NCK channel (NCK→PLC) | | | | | | | |
|---|---|---|---|---|---|---|---|---|
| **Byte** | Bit 7 | Bit 6 | Bit 5 | Bit 4 | Bit 3 | Bit 2 | Bit 1 | Bit 0 |
| DBB **40** | Geometry axis 1 | | | | | | | |
| | Traverse command /H1/ | | Travel requests | | | Handwheel active /H1/ | | |
| | plus | minus | plus | minus | | 3 | 2 | 1 |
| DBB **41** | Geometry axis 1 active machine function /H1/ | | | | | | | |
| | | | Var. INC | 10000 INC | 1000 INC | 100 INC | 10 INC | 1 INC |
| DBB **42** | OEM signals geometry axis 1 | | | | | | | |
| | | | | | | | | |
| DBB **43** | Geometry axis 1 | | | | | | | |
| | | | | | | | | |
| DBB **44** MMC--> PLC | | | | | | | | |
| | | | | | | | | |
| DBB **46** | Geometry axis 2 | | | | | | | |
| | Traverse command /H1/ | | Travel requests | | | Handwheel active /H1/ | | |
| | plus | minus | plus | minus | | 3 | 2 | 1 |
| DBB **47** | Geometry axis 2 active machine function /H1/ | | | | | | | |
| | | | Var. INC | 10000 INC | 1000 INC | 100 INC | 10 INC | 1 INC |
| DBB **48** | OEM signals geometry axis 2 | | | | | | | |
| | | | | | | | | |
| DBB **49** | Geometry axis 2 | | | | | | | |
| | | | | | | | | |
| DBB **50** MMC--> PLC | | | | | | | | |
| | | | | | | | | |
| DBB **52** | Geometry axis 3 | | | | | | | |
| | Traverse command /H1/ | | Travel requests | | | Handwheel active /H1/ | | |
| | plus | minus | plus | minus | | 3 | 2 | 1 |
| DBB **53** | Geometry axis 3 active machine function /H1/ | | | | | | | |
| | | | Var. INC | 10000 INC | 1000 INC | 100 INC | 10 INC | 1 INC |

© Siemens AG 2004 All Rights Reserved

| | | | | | | | | |
|---|---|---|---|---|---|---|---|---|
| DBB **54** | OEM signals geometry axis 3 | | | | | | | |
| DBB **55** | Geometry axis 3 | | | | | | | |
| DBB **56** **MMC--> PLC** | | | | | | | | |
| DBB **57** | | | | | | | | |

## Change signals on auxiliary function transfer from NC channel

| **DB 21 - 30** | **Signals from NCK channel (NCK→PLC)** | | | | | | | |
|---|---|---|---|---|---|---|---|---|
| **Byte** | Bit 7 | Bit 6 | Bit 5 | Bit 4 | Bit 3 | Bit 2 | Bit 1 | Bit 0 |
| DBB **58** | | | | M fct. 5 change /H2/ | M fct. 4 change /H2/ | M fct. 3 change /H2/ | M fct. 2 change /H2/ | M fct. 1 change /H2/ |
| DBB **59** | | | | M fct. 5 not decoded | M fct. 4 not decoded | M fct. 3 not decoded | M fct. 2 not decoded | M fct. 1 not decoded |
| DBB **60** | | S fct. 3 quick | S fct. 2 quick | S fct. 1 quick | | S fct. 3 change /H2/ | S fct. 2 change /H2/ | S fct. 1 change /H2/ |
| DBB **61** | | T fct 3 quick | T fct. 2 quick | T fct. 1 quick | | T fct. 3 change/H2/ (SW 2 and higher) | T fct. 2 change/H2/ (SW 2 and higher) | T fct. 1 change /H2/ |
| DBB **62** | | D fct. 3 quick | D fct. 2 quick | D fct. 1 quick | | D fct. 3 change/H2/ (SW 2 and higher) | D fct. 2 change/H2/ (SW 2 and higher) | D fct. 1 change /H2/ |
| DBB **63** | | | | DL fct. quick | | | | DL fct. change |
| DBB **64** | | H fct. 3 quick | H fct. 2 quick | H fct. 1 quick | | H fct. 3 change /H2/ | H fct. 2 change /H2/ | H fct. 1 change /H2/ |
| DBB **65** | | | F fct. 6 change /H2/ | F fct. 5 change /H2/ | F fct. 4 change /H2/ | F fct. 3 change /H2/ | F fct. 2 change /H2/ | F fct. 1 change /H2/ |
| DBB **66** | | | | M fct. 5 quick | M fct. 4 quick | M fct. 3 quick | M fct. 2 quick | M fct. 1 quick |
| DBB **67** | | | F fct. 6 quick | F fct. 5 quick | F fct. 4 quick | F fct. 3 quick | F fct. 2 quick | F fct. 1 quick |

**Note**

For 10-decade T numbers, only the T fct. 1 change signal is available. For 5-decade D numbers, only the D fct. 1 change signal is available.

© Siemens AG 2004 All Rights Reserved

## Transferred M/S functions

| DB 21 - 30 | Signals from NCK channel (NCK→PLC) | | | | | | | |
|---|---|---|---|---|---|---|---|---|
| **Byte** | Bit 7 | Bit 6 | Bit 5 | Bit 4 | Bit 3 | Bit 2 | Bit 1 | Bit 0 |
| DBW **68** | Extended address M function 1 (binary) /H2/ | | | | | | | |
| | | | | | | | | |
| DBD **70** | | | | | | | | |
| | | | M function 1 (binary) /H2/ | | | | | |
| | | | | | | | | |
| | | | | | | | | |
| DBW **74** | Extended address M function 2 (binary) /H2/ | | | | | | | |
| DBD **76** | M function 2 (binary) /H2/ | | | | | | | |
| DBW **80** | Extended address M function 3 (binary) /H2/ | | | | | | | |
| DBD **82** | M function 3 (binary) /H2/ | | | | | | | |
| DBW **86** | Extended address M function 4 (binary) /H2/ | | | | | | | |
| DBD **88** | M function 4 (binary) /H2/ | | | | | | | |
| DBW **92** | Extended address M function 5 (binary) /H2/ | | | | | | | |
| DBD **94** | M function 5 (binary) /H2/ | | | | | | | |
| DBW **98** | Extended address S function 1 (binary) /H2/ | | | | | | | |
| DBD **100** | S function 1 (REAL format) /H2/ | | | | | | | |
| DBW **104** | Extended address S function 2 (binary) /H2/ | | | | | | | |
| DBD **106** | S function 2 (REAL format) /H2/ | | | | | | | |
| DBW **110** | Extended address S function 3 (binary) /H2/ | | | | | | | |
| DBD **112** | S function 3 (REAL format) /H2/ | | | | | | | |

**Note**

M functions are programmed in the part program in the INTEGER format (8 decades plus sign).

”REAL format” means: 24 bit mantissa and 8 bit exponent.

© Siemens AG 2004 All Rights Reserved

## Transferred T/D/DL functions

| DB 21 - 30 | Signals from NCK channel (NCK→PLC) | | | | | | | |
|---|---|---|---|---|---|---|---|---|
| **Byte** | Bit 7 | Bit 6 | Bit 5 | Bit 4 | Bit 3 | Bit 2 | Bit 1 | Bit 0 |
| DBW **116** | Extended address T function 1 (16 bit Int) | | | | | | | |
| DBW **118**<br>DBD **118** | T function 1 (binary) /H2/<br>For 8-decade T nos., T function 1 (32 bit DINT) is used in DBD 118 (see note) | | | | | | | |
| DBW **120** | Extended address T function 2 (16 bit Int) | | | | | | | |
| DBW **122** | T function 2 (Int) | | | | | | | |
| DBW **124** | Extended address T function 3 (16 bit Int) | | | | | | | |
| DBW **126** | T function 3 (Int) | | | | | | | |
| DBB **128** | | | | | | | | |
| DBB **129** | D function 1 (binary) /H2/ | | | | | | | |
| DBW **130**<br>DBB **130** | For 5-decade D nos., D function 1 (16 bit DINT) is used in DBD 130 (see note)<br>Extended address D function 2 (8 bit Int) | | | | | | | |
| DBB **131** | D function 2 (8 bit Int) | | | | | | | |
| DBB **132** | Extended address D function 3 (8 bit Int) | | | | | | | |
| DBB **133** | D function 3 (8 bit Int) | | | | | | | |
| DBW **134** | Extended address DL function (16 bit Int) | | | | | | | |
| DBD **136** | DL function (REAL) | | | | | | | |

**Note**

With active tool management, programmed T functions are **not** output to the PLC.

8-decade T nos. are only available as T function 1

Programmed D functions with names (e.g. D=CUTEDGE_1) **cannot** be output in ASCII format to the PLC.

5-decade D nos. are only available as D function 1

The REAL format corresponds to floating point representation in STEP 7 (24 bit mantissa and 8 bit exponent). This floating point format supplies a maximum of 7 valid places.

© Siemens AG 2004 All Rights Reserved

## Transferred H/F functions

| DB 21 - 30 | Signals from NCK channel (NCK→PLC) | | | | | | | |
|---|---|---|---|---|---|---|---|---|
| **Byte** | Bit 7 | Bit 6 | Bit 5 | Bit 4 | Bit 3 | Bit 2 | Bit 1 | Bit 0 |
| DBW **140** | Extended address H function 1 (binary) /H2/ | | | | | | | |
| DBD **142** | H function 1 (REAL or Dint) /H2/ | | | | | | | |
| DBW **146** | Extended address H function 2 (binary) /H2/ | | | | | | | |
| DBD **148** | H function 2 (REAL or Dint) /H2/ | | | | | | | |
| DBW **152** | Extended address H function 3 (binary) /H2/ | | | | | | | |
| DBD **154** | H function 3 (REAL or Dint) /H2/ | | | | | | | |
| DBW **158** | Extended address F function 1 (binary) /H2/ | | | | | | | |
| DBD **160** | F function 1 (REAL format) /H2/ | | | | | | | |
| DBW **164** | Extended address F function 2 (binary) /H2/ | | | | | | | |
| DBD **166** | F function 2 (REAL format) /H2/ | | | | | | | |
| DBW **170** | Extended address F function 3 (binary) /H2/ | | | | | | | |
| DBD **172** | F function 3 (REAL format) /H2/ | | | | | | | |
| DBW **176** | Extended address F function 4 (binary) /H2/ | | | | | | | |
| DBD **178** | F function 4 (REAL format) /H2/ | | | | | | | |
| DBW **182** | Extended address F function 5 (binary) /H2/ | | | | | | | |
| DBD **184** | F function 5 (REAL format) /H2/ | | | | | | | |
| DBW **188** | Extended address F function 6 (binary) /H2/ | | | | | | | |
| DBD **190** | F function 6 (REAL format) /H2/ | | | | | | | |

**Note**

F functions are programmed in the part program in the REAL format.

The extended address of the F function contains an identifier with the following meaning:
0 = path feed,
1-31 = machine axis number for feed with positioning axes.

The H function data type is dependent on MD 22110: AUXFU_H_TYPE_INT.

© Siemens AG 2004 All Rights Reserved

## Decoded M signals (M0–M99)

| DB 21 - 30 | Signals from NCK channel (NCK→PLC) | | | | | | | |
|---|---|---|---|---|---|---|---|---|
| **Byte** | Bit 7 | Bit 6 | Bit 5 | Bit 4 | Bit 3 | Bit 2 | Bit 1 | Bit 0 |
| DBB **194** | Dynamic M functions | | | | | | | |
| | M07 | M06 | M05 * | M04 * | M03 * | M02 | M01 | M00 |
| DBB **195** | Dynamic M functions /H2/ | | | | | | | |
| | M15 | M14 | M13 | M12 | M11 | M10 | M09 | M08 |
| DBB **196** | Dynamic M functions /H2/ | | | | | | | |
| | M23 | M22 | M21 | M20 | M19 | M18 | M17 | M16 |
| DBB **197** | Dynamic M functions /H2/ | | | | | | | |
| | M31 | M30 | M29 | M28 | M27 | M26 | M25 | M24 |
| DBB **198** | Dynamic M functions /H2/ | | | | | | | |
| | M39 | M38 | M37 | M36 | M35 | M34 | M33 | M32 |
| DBB **199** | Dynamic M functions /H2/ | | | | | | | |
| | M47 | M46 | M45 | M44 | M43 | M42 | M41 | M40 |
| DBB **200** | Dynamic M functions /H2/ | | | | | | | |
| | M55 | M54 | M53 | M52 | M51 | M50 | M49 | M48 |
| DBB **201** | Dynamic M functions /H2/ | | | | | | | |
| | M63 | M62 | M61 | M60 | M59 | M58 | M57 | M56 |
| DBB **202** | Dynamic M functions /H2/ | | | | | | | |
| | M71 | M70 * | M69 | M68 | M67 | M66 | M65 | M64 |
| DBB **203** | Dynamic M functions /H2/ | | | | | | | |
| | M79 | M78 | M77 | M76 | M75 | M74 | M73 | M72 |
| DBB **204** | Dynamic M functions /H2/ | | | | | | | |
| | M87 | M86 | M85 | M84 | M83 | M82 | M81 | M80 |
| DBB **205** | Dynamic M functions /H2/ | | | | | | | |
| | M95 | M94 | M93 | M92 | M91 | M90 | M89 | M88 |
| DBB **206** | Dynamic M functions /H2/ | | | | | | | |
| | | | | | M99 | M98 | M97 | M96 |
| DBB **207** | | | | | | | | |

**Note**

M functions marked with * are not decoded in this bit array if a spindle is configured in the channel. In this case, these M functions are offered as extended M functions in DB21-30.DBB68 ff. and in the relevant axis DB DB31-61.DBB86 ff.

Dynamic M functions (M00 to M99) are decoded by the basic PLC program.

The PLC user must use dynamic M functions in order to generate static M functions.

© Siemens AG 2004 All Rights Reserved

## Active G functions

| DB 21 - 30 | Signals from NCK channel (NCK→PLC) | | | | | | | |
|---|---|---|---|---|---|---|---|---|
| **Byte** | Bit 7 | Bit 6 | Bit 5 | Bit 4 | Bit 3 | Bit 2 | Bit 1 | Bit 0 |
| DBB **208** | Number of active G function of G function group 1 (binary) /K1/ | | | | | | | |
| DBB **209** | Number of active G function of G function group 2 (binary) /K1/ | | | | | | | |
| DBB **210** | Number of active G function of G function group 3 (binary) /K1/ | | | | | | | |
| DBB **211** | Number of active G function of G function group 4 (binary) /K1/ | | | | | | | |
| DBB **212** | Number of active G function of G function group 5 (binary) /K1/ | | | | | | | |
| DBB **213** | Number of active G function of G function group 6 (binary) /K1/ | | | | | | | |
| DBB **214** | Number of active G function of G function group 7 (binary) /K1/ | | | | | | | |
| DBB **215** | Number of active G function of G function group 8 (binary) /K1/ | | | | | | | |
| **...** | | | | | | | | |
| DBB **270** | Number of active G function of G function group n-1 (binary) /K1/ | | | | | | | |
| DBB **271** | Number of active G function of G function group n (binary) /K1/ | | | | | | | |

**Note**

The active G functions of the groups are updated each time a G function or a mnemonic identifier (e.g. SPLINE) is programmed.

G functions within a G group are output as binary value, starting with 1.

A G function with the value 0 means that no G function is active for this G group.

© Siemens AG 2004 All Rights Reserved

## Signals for protection areas from NC channel

| DB 21 - 30 | Signals from NCK channel (NCK→PLC) (SW 2 and higher) | | | | | | | |
|---|---|---|---|---|---|---|---|---|
| **Byte** | Bit 7 | Bit 6 | Bit 5 | Bit 4 | Bit 3 | Bit 2 | Bit 1 | Bit 0 |
| DBB **272** | Machine-related protection area preactivated /A3/ | | | | | | | |
| | Area 8 | Area 7 | Area 6 | Area 5 | Area 4 | Area 3 | Area 2 | Area 1 |
| DBB **273** | Machine-related protection area preactivated /A3/ | | | | | | | |
| | | | | | | | Area 10 | Area 9 |
| DBB **274** | Channel-specific protection area preactivated /A3/ | | | | | | | |
| | Area 8 | Area 7 | Area 6 | Area 5 | Area 4 | Area 3 | Area 2 | Area 1 |
| DBB **275** | Channel-specific protection area preactivated /A3/ | | | | | | | |
| | | | | | | | Area 10 | Area 9 |
| DBB **276** | Machine-related protection area violated /A3/ | | | | | | | |
| | Area 8 | Area 7 | Area 6 | Area 5 | Area 4 | Area 3 | Area 2 | Area 1 |
| DBB **277** | Machine-related protection area violated /A3/ | | | | | | | |
| | | | | | | | Area 10 | Area 9 |
| DBB **278** | Channel-related protection area violated /A3/ | | | | | | | |
| | Area 8 | Area 7 | Area 6 | Area 5 | Area 4 | Area 3 | Area 2 | Area 1 |
| DBB **279** | Channel-related protection area violated /A3/ | | | | | | | |
| | | | | | | | Area 10 | Area 9 |

© Siemens AG 2004 All Rights Reserved

## Instruction-controlled signals to NC channel

| DB 21 - 30 | Signals to NCK channel (NCK→PLC) (SW 4 and higher) | | | | | | | |
|---|---|---|---|---|---|---|---|---|
| **Byte** | Bit 7 | Bit 6 | Bit 5 | Bit 4 | Bit 3 | Bit 2 | Bit 1 | Bit 0 |
| DBB **280** | | | | | | | Synch. action disable request | Reserved |
| DBB **281** | | | | | | | Synch. action disabled | |
| DBW **282** | Reserved | | | | | | | |
| DBW **284** | Reserved | | | | | | | |
| DBW **286** | Reserved | | | | | | | |
| DBW **288** | Reserved | | | | | | | |
| DBW **290** | Reserved | | | | | | | |
| DBW **292** | Reserved | | | | | | | |
| DBW **294** | Reserved | | | | | | | |
| DBW **296** | Reserved | | | | | | | |
| DBW **298** | Reserved | | | | | | | |
| DBB **300** | Disable synchronized actions /FBSY/ | | | | | | | |
| | No. 8 | No. 7 | No. 6 | No. 5 | No. 4 | No. 3 | No. 2 | No. 1 |
| DBB **301** | Disable synchronized actions /FBSY/ | | | | | | | |
| | No. 16 | No. 15 | No. 14 | No. 13 | No. 12 | No. 11 | No. 10 | No. 9 |
| DBB **302** | Disable synchronized actions /FBSY/ | | | | | | | |
| | No. 24 | No. 23 | No. 22 | No. 21 | No. 20 | No. 19 | No. 18 | No. 17 |
| DBB **303** | Disable synchronized actions /FBSY/ | | | | | | | |
| | No. 32 | No. 31 | No. 30 | No. 29 | No. 28 | No. 27 | No. 26 | No. 25 |
| DBB **304** | Disable synchronized actions /FBSY/ | | | | | | | |
| | No. 40 | No. 39 | No. 38 | No. 37 | No. 36 | No. 35 | No. 34 | No. 33 |
| DBB **305** | Disable synchronized actions /FBSY/ | | | | | | | |
| | No. 48 | No. 47 | No. 46 | No. 45 | No. 44 | No. 43 | No. 42 | No. 41 |
| DBB **306** | Disable synchronized actions /FBSY/ | | | | | | | |
| | No. 56 | No. 55 | No. 54 | No. 53 | No. 52 | No. 51 | No. 50 | No. 49 |
| DBB **307** | Disable synchronized actions /FBSY/ | | | | | | | |
| | No. 64 | No. 63 | No. 62 | No. 61 | No. 60 | No. 59 | No. 58 | No. 57 |

**Note**

The request signals are set by the user and reset by the basic program after transmission of the corresponding data.

© Siemens AG 2004 All Rights Reserved

## Instruction-controlled signals from NC channel

| DB 21 - 30 | Signals from NCK channel (NCK→PLC) (SW 4 and higher) | | | | | | | |
|---|---|---|---|---|---|---|---|---|
| **Byte** | Bit 7 | Bit 6 | Bit 5 | Bit 4 | Bit 3 | Bit 2 | Bit 1 | Bit 0 |
| DBB **308** | Synchronized actions can be disabled /FBSY/ | | | | | | | |
| | Nr. 8 | Nr. 7 | Nr. 6 | Nr. 5 | Nr. 4 | Nr. 3 | Nr. 2 | Nr.1 |
| DBB **309** | Synchronized actions can be disabled /FBSY/ | | | | | | | |
| | Nr. 16 | Nr. 15 | Nr. 14 | Nr. 13 | Nr. 12 | Nr. 11 | Nr.10 | Nr.9 |
| DBB **310** | Synchronized actions can be disabled /FBSY/ | | | | | | | |
| | Nr. 24 | Nr. 23 | Nr. 22 | Nr. 21 | Nr. 20 | Nr. 19 | Nr.18 | Nr.17 |
| DBB **311** | Synchronized actions can be disabled /FBSY/ | | | | | | | |
| | Nr. 32 | Nr. 31 | Nr. 30 | Nr. 29 | Nr. 28 | Nr. 27 | Nr. 26 | Nr.25 |
| DBB **312** | Synchronized actions can be disabled /FBSY/ | | | | | | | |
| | Nr. 40 | Nr. 39 | Nr. 38 | Nr. 37 | Nr. 36 | Nr. 35 | Nr. 34 | Nr. 33 |
| DBB **313** | Synchronized actions can be disabled /FBSY/ | | | | | | | |
| | Nr. 48 | Nr. 47 | Nr. 46 | Nr. 45 | Nr. 44 | Nr. 43 | Nr. 42 | Nr.41 |
| DBB **314** | Synchronized actions can be disabled /FBSY/ | | | | | | | |
| | Nr. 56 | Nr. 55 | Nr. 54 | Nr. 53 | Nr. 52 | Nr. 51 | Nr. 50 | Nr.49 |
| DBB **315** | Synchronized actions can be disabled /FBSY/ | | | | | | | |
| | Nr. 64 | Nr. 63 | Nr. 62 | Nr. 61 | Nr. 60 | Nr. 59 | Nr. 58 | Nr.57 |
| **Cyclic Signals interface NCK → PLC** | | | | | | | | |
| DBB **316** | Active G functions | | | | | | | |
| | | | | | | | G0 PATH | G00 geo. |
| DBB **317** | Tool missing | PTP motion active | Travel request drive test | | | | Workpiece setpoint reached | External language mode active |
| DBB **318** | Overstore active | Dry-run feedrate active /V1/ | Associated M01 active /H2/ | Stop delayed | TOFF movement active | TOFF active | Search active /K1/ | ASUP stopped /K1/ |
| DBB **319** | No tool change command active | | Repos DEFERRAL Chan | Delay FTS | Repos Path Mode Ackn 2 | Repos Path Mode Ackn 1 | Repos Path Mode Ackn 0 | REPOS MODE EDGE ACKN |

© Siemens AG 2004 All Rights Reserved

## Signals to orientation axes

| DB 21 - 30 | Signals to NCK channel (PLC→NCK) | | | | | | | |
|---|---|---|---|---|---|---|---|---|
| **Byte** | Bit 7 | Bit 6 | Bit 5 | Bit 4 | Bit 3 | Bit 2 | Bit 1 | Bit 0 |
| DBB **320** | Traversing keys | | | | **Orientation axis 1** | | | |
| | + | – | Rapid traverse override | Traversing key disable | Feed stop | Activate handwheel (bit value coding) | | |
| | – | – | | | | | | |
| DBB **321** | **Orientation axis 1** | | | | | | | |
| | | | var. INC | 10000 INC | 1000 INC | 100 INC | 10 INC | 1 INC |
| DBB **322** | **OEM signals orientation axis 1** | | | | | | | |
| DBB **323** | **Orientation axis 1** | | | | | | | |
| | | | var. INC | 10000 INC | 1000 INC | 100 INC | 10 INC | 1 INC |
| DBB **324** | Traversing keys | | | | **Orientation axis 2** | | | |
| | + | – | Rapid traverse override | Traversing key disable | Feed stop | Activate handwheel (bit value coding) | | |
| DBB **325** | **Orientation axis 2** | | | | | | | |
| | | | var. INC | 10000 INC | 1000 INC | 100 INC | 10 INC | 1 INC |
| DBB **326** | **OEM signals orientation axis 2** | | | | | | | |
| DBB **327** | **Orientation axis 2** | | | | | | | |
| DBB **328** | Traversing keys | | | | **Orientation axis 3** | | | |
| | + | – | Rapid traverse override | Traversing key disable | Feed stop | Activate handwheel (bit value coding) | | |
| DBB **329** | **Orientation axis 3** | | | | | | | |
| DBB **330** | **OEM signals orientation axis 3** | | | | | | | |
| DBB **331** | **Orientation axis 3** | | | | | | | |

© Siemens AG 2004 All Rights Reserved

## Signals from orientation axes

| DB 21 - 30 | Signals from NCK channel (NCK→PLC) | | | | | | | |
|---|---|---|---|---|---|---|---|---|
| **Byte** | Bit 7 | Bit 6 | Bit 5 | Bit 4 | Bit 3 | Bit 2 | Bit 1 | Bit 0 |
| DBB **332** | **Orientation axis 1** | | | | | | | |
| | Travel command | | Travel request | | | Handwheel active | | |
| | plus | minus | plus | minus | | (bit value coding) | | |
| DBB **333** | **Orientation axis 1** | | | | | | | |
| | Active machine function | | | | | | | |
| | | | var. INC | 10000 INC | 1000 INC | 100 INC | 10 INC | 1 INC |
| DBB **334** | **OEM signals orientation axis 1** | | | | | | | |
| | | | | | | | | |
| DBB **335** | **Orientation axis 1** | | | | | | | |
| | | | | | | | | |
| DBB **336** | **Orientation axis 2** | | | | | | | |
| | Travel command | | Travel request | | | Handwheel active (bit value coding) | | |
| | plus | minus | plus | minus | | | | |
| DBB **337** | **Orientation axis 2** | | | | | | | |
| | Active machine function | | | | | | | |
| | | | var. INC | 10000 INC | 1000 INC | 100 INC | 10 INC | 1 INC |
| DBB **338** | **OEM signals orientation axis 2** | | | | | | | |
| | | | | | | | | |
| DBB **339** | **Orientation axis 2** | | | | | | | |
| | | | | | | | | |
| DBB **340** | **Orientation axis 3** | | | | | | | |
| | Travel command | | Travel request | | | Handwheel active | | |
| | plus | minus | plus | minus | | (bit value coding) | | |
| DBB **341** | **Orientation axis 3** | | | | | | | |
| | Active machine function | | | | | | | |
| | | | var. INC | 10000 INC | 1000 INC | 100 INC | 10 INC | 1 INC |
| DBB **342** | **OEM signals orientation axis 3** | | | | | | | |
| | | | | | | | | |
| DBB **343** | **Orientation axis 3** | | | | | | | |
| | | | | | | | | |

© Siemens AG 2004 All Rights Reserved

## Tool management functions from NC channel

| DB 21 - 30 | Signals from NCK channel (NCK→PLC) | | | | | | | |
|---|---|---|---|---|---|---|---|---|
| **Byte** | Bit 7 | Bit 6 | Bit 5 | Bit 4 | Bit 3 | Bit 2 | Bit 1 | Bit 0 |
| Modification signals tool management functions | | | | | | | | |
| DBB **344** | | | | | Last replacement tool of tool group | Transfer to new replacement tool | Tool limit value reached | Tool prewarning limit reached |
| DBB **345-347** | | | | | | | | |
| Transferred tool management functions | | | | | | | | |
| DBD **348** | T number for tool prewarning limit (DInt) | | | | | | | |
| DBD **352** | T number for tool limit value (DInt) | | | | | | | |
| DBD **356** | T number of new replacement tool (DInt) | | | | | | | |
| DBD **360** | T number of last replacement tool (DInt) | | | | | | | |

© Siemens AG 2004 All Rights Reserved

## Signals from/to NC channel

| DB 21 - 30 | Signals from NCK channel (NCK→PLC, PLC →NCK) | | | | | | | |
|---|---|---|---|---|---|---|---|---|
| **Byte** | Bit 7 | Bit 6 | Bit 5 | Bit 4 | Bit 3 | Bit 2 | Bit 1 | Bit 0 |
| DBB **364** | CH_CYCLES_SIG_IN (Bit 0 – 7 ) | | | | | | | |
| DBB **365** | CH_CYCLES_SIG_IN (Bit 8 – 15 ) | | | | | | | |
| DBB **366** | CH_CYCLES_SIG_OUT (Bit 0 – 7 ) | | | | | | | |
| DBB **367** | CH_CYCLES_SIG_OUT (Bit 8 – 15 ) | | | | | | | |
| DBB **368** | CH_OEM_TECHNO_SIG_IN (DBB368 - 371) | | | | | | | |
| DBB **369** | | | | | | | | |
| DBB **370** | | | | | | | | |
| DBB **371** | | | | | | | | |
| DBB **372** | CH_OEM_TECHNO_SIG_OUT (DBB372 - 375) | | | | | | | |
| DBB **373** | | | | | | | | |
| DBB **374** | | | | | | | | |
| DBB **375** | | | | | | | | |
| DBB **376** | ProgEventDisplay | | | | | | | |
| DBB **377** | | | | | | | | |
| DBB **378** | | | | | | | | |
| DBB **379** | | | | | | | | |
| DBB **380** | | | | | | | | |
| DBB **381** | | | | | | | | |
| DBB **382** | | | | | | | | |
| DBB **383** | | | | | | | | |

© Siemens AG 2004 All Rights Reserved

## 4.2.14 Signals from/to axis/spindle (PLC→NCK) (DB 31–DB 61)

| DB 31 -61 | Signals to axis/spindle (PLC→NCK) | | | | | | | |
|---|---|---|---|---|---|---|---|---|
| **Byte** | Bit 7 | Bit 6 | Bit 5 | Bit 4 | Bit 3 | Bit 2 | Bit 1 | Bit 0 |
| DBB **0** Axis and spindle | Feedrate override /V1/ | | | | | | | |
| | H | G | F | E | D | C | B | A |
| DBB **1** Axis and spindle | Override active /V1/ | Position measuring system 2 /A2/ | Position measuring system 1 /A2/ | Follow-up mode /A2/ | Axis/spindle disable /A2/ | Sensor fixed stop /F1/ (SW 2 and higher) | Acknowl. fixed stop reached /F1/ (SW 2 and higher)) | Drive test movement enable |
| DBB **2** Axis and spindle | Reference point value /R1/ | | | | Clamping in progress /A3/ | Delete distance-to-go/ spindle reset /A2, S1/ | Controller enable /A2/ | Cam activation /N3/ (SW 2 and higher) |
| | 4 | 3 | 2 | 1 | | | | |
| DBB **3** Axis and spindle | Program test axis/ spindle release | Velocity/ spindle speed limitation /A3/ | Activate fixed feed 4 /FBMA/, /V1/ (SW 4 and higher) | Activate fixed feed 3 /FBMA/, /V1/ (SW 4 and higher) | Activate fixed feed 2 /FBMA/, /V1/ (SW 4 and higher) | Activate fixed feed 1 /FBMA/, /V1/ (SW 4 and higher) | Enable travel to fixed stop /F1/ SW 2 and higher) | Accept external ZO /K2/ (SW 2 and higher) |
| DBB **4** Axis and spindle | Traversing keys /H1/ | | Rapid traverse override /H1/ | Traversing key disable /H1/ | Feed stop/spindle stop /A2/ | Activate handwheel /H1/ | | |
| | plus | minus | | | | 3 | 2 | 1 |
| DBB **5** Axis and spindle | Machine function /H1/ | | | | | | | |
| | | | Var. INC | 10000 INC | 1000 INC | 100 INC | 10 INC | 1 INC |
| DBB **6** Axis and spindle | OEM axis signals | | | | | | | |
| | | | | | | | | |
| DBB **7** | | | | | | | | |
| DBB **8** | Request PLC axis/spindle | | | Activation signal with change of this byte | Allocate NC axis to channel /K5/ | | | |
| | /K5/ | | | /K5/ | D | C | B | A |

**Note**

DBX8.4: is automatically reset after assignment (SW 3.7, 4.2 and higher). For previous SW versions, the activation signal must be applied until the assignment is made (DBB68).

© Siemens AG 2004 All Rights Reserved

| DB 31-61 | Continuation: Signals to axis/spindle (PLC → NCK) | | | | | | | |
|---|---|---|---|---|---|---|---|---|
| **Byte** | Bit 7 | Bit 6 | Bit 5 | Bit 4 | Bit 3 | Bit 2 | Bit 1 | Bit 0 |
| DBB **9** | | | | | Lock parameter set definition from NC /A2/ | Control parameter block (SW4 and higher) /A2/ C | B | A |
| DBB **10** | | | | | | | | REPOS DELAY |
| DBB **11** | | | | | | | | Start brake test |
| DBB **12** Axis | Delay reference point approach /R1/ | | | Modulo limit enabled | 2nd software limit switch /A3/ plus | minus | Hardware limit switch /A3/ plus | minus |
| DBB **13** Axis | | | | | | | | |
| DBB **14** Axis | | | | | | | | |
| DBB **15** Axis | | | | | | | | |
| DBB **16** Spindle | Delete S value /S1/ | No n-monitoring when changing gear /S1/ | Resyn-chronize spindle 1 /S1/ | Resyn-chronize spindle 2 /S1/ | Gear has changed over /S1/ | Actual gear stage /S1/ C | B | A |
| DBB **17** Spindle | | Invert M3/M4 /S1/ | Resyn-chronize spindle at pos. 2 /S1/ | Resyn-chronize spindle at pos. 1 /S1/ | | | | Feedrate override f. spindle valid /S1/ |
| DBB **18** Spindle | Setpoint rot. direct. /S1/ CCW | CW | Oscillating speed /S1/ | Oscillation via PLC /S1/ | | | | |
| DBB **19** Spindle | Spindle override /V1/ H | G | F | E | D | C | B | A |

© Siemens AG 2004 All Rights Reserved

| DB 31-61 | Continuation: Signals to axis/spindle (PLC → NCK) | | | | | | | |
|---|---|---|---|---|---|---|---|---|
| **Byte** | Bit 7 | Bit 6 | Bit 5 | Bit 4 | Bit 3 | Bit 2 | Bit 1 | Bit 0 |
| DBB **20** 611D 1) | | | | | Speed setpoint smoothing /A2/ | Torque limit 2 /A2/ | Ramp-function generator interface /A2/ | Runup change-over U/f mode /DE1/ |
| DBB **21** 611D 1) | Pulse enable /A2/ | n controller integrator disable /A2/ | Selecting motor /A2/ | Motor selection /A2/ B | A | Drive parameter set selection /A2/ C | B | A |
| DBB **22** Safety Integr. 1) | | | | Selection of Safe speed bit value 1 | bit value 0 | | Deselect safe standstill | Deselect safe velocity and standstill |
| DBB **23** Safety Integr. | Activate test stop | | | Activate end position pair 2 | | Trans-mission of bit value 2 | Trans-mission of bit value 1 | Trans-mission of bit value 0 |
| DBB **24** | Master/ slave on | Bit value for CTRLOUT_changed: 1 | 0 Change setpoint output assignment (for compile cycles) | Torque compensa-tion controller ON | | CC_Slave axis Suppress link | Control Axis | Stepper motor Rotation monitoring |
| DBB **25** | | | | | | | | |
| DBB **26** Grinding | Enable ESR response | | | Enable slave axis overlay | Comp-ensation control ON | | | |
| DBB **27** Grinding | | Stop | | | | Resume | | |
| | HIAxMove | Corr | DEPBCS | DEPMCS | HIAxMove | Corr | DEPBCS | DEPMCS |
| DBB **28** Oscillation | PLC checks axis /P5/ (SW 2 and higher) | AxStop, stop | Stop at next reversal point /P5/ (SW 2 and higher) | Change reversal point /P5/ (SW 2 and higher) | Set reversal point /P5/ (SW 2 and higher) | AXRESUME | AXRESET | |
| DBB **29** Grinding | | | Disable automatic synchroni-zation | Start gantry synchroni-zation Gantry | | | | |
| DBB **30** (Technology) | | | | Position spindle | Autom. gear step change | Start spindle Counter-clockwise | Start spindle Clockwise | Stop spindle |

1) See note at the end of this subsection

© Siemens AG 2004 All Rights Reserved

| DB 31-61 | Continuation: Signals to axis/spindle (PLC → NCK) | | | | | | | |
|---|---|---|---|---|---|---|---|---|
| **Byte** | Bit 7 | Bit 6 | Bit 5 | Bit 4 | Bit 3 | Bit 2 | Bit 1 | Bit 0 |
| DBB **31** (Technology) | | Track synchronism | Disable synchronization | Resynchronize | | | | |
| DBB **32** Safety Integr. 1) | | | Deselect external stop E | Deselect external stop D | Deselect external stop C | Deselect external stop A | | |
| DBB **33** Safety Integr. 1) | Select override: Bit value 3 | Bit value 2 | Bit value 1 | Bit value 0 | | | | |
| DBB **34** | | | | | | | | |
| DBB ... | | | | | | | | |
| DBB **59** | | | | | | | | |

**Note**

The IS "Delete distance-to-go" (DBX2.2) is effective only for position axes on an axis-specific basis; the IS "Delete distance-to-go" (DB21-30, DB6.2) acts on a channel-specific basis. The IS "Spindle reset" (DXB2.2) acts on a spindle-specific basis.

| DB 31 -61 | Signals from axis/spindle (NCK→PLC) | | | | | | | |
|---|---|---|---|---|---|---|---|---|
| **Byte** | Bit 7 | Bit 6 | Bit 5 | Bit 4 | Bit 3 | Bit 2 | Bit 1 | Bit 0 |
| DBB **60** Axis and spindle | Position reached /B1/ with exact stop fine | Position reached /B1/ with exact stop coarse | References/ synchronizes 2 /R1/ | References/ synchronizes 1 /R1/ | Encoder limit frequency exceeded 2 /A3/ | Encoder limit frequency exceeded 1 /A3/ | NCU_Link Axis active /B3/ | Spindle /no axis /S1/ |
| DBB **61** Axis and spindle | Current controller active /A2/ | Speed controller active /A2/ | Position controller active /A2/ | Axis/spindle stationary ($n < n_{min}$) /A2/ | Follow-up mode active /A2/ | Axis ready /B3/ | Axial alarm | Travel request /F1/ |
| DBB **62** | Axis container rotation active | Force fixed stop limited /F1/ (SW 5.2) | Fixed stop reached /F1/ (SW 2 and higher) | Activate travel to fixed stop /F1/ (SW 2 and higher) | Measurement active /M5/ | Revolutional feedrate active | Handwheel overlay active /H1/ (SW 2 and higher) | Software cams active /N3/ (SW 2 and higher) |
| DBB **63** | Stop: HIAxMove active | Stop: Corr active | Stop: DEPBCS active | Stop: DEPMCS active | Axis/ spindle disable active | Axis stop active /P2/ | PLC-controlled axis /P2/ | AXRESET DONE /P2/ |
| DBB **64** Axis and spindle | Traverse command /H1/ plus | Traverse command /H1/ minus | Travel request plus | Travel request minus | | Handwheel active /H1/ 3 | Handwheel active /H1/ 2 | Handwheel active /H1/ 1 |
| **65** Axis and spindle | Active machine function /H1/ | | Var. INC | 10000 INC | 1000 INC | 100 INC | 10 INC | 1 INC |

1) See note at the end of this subsection

© Siemens AG 2004 All Rights Reserved

| DB 31-61 | Continuation: Signals to axis/spindle (PLC → NCK) | | | | | | | |
|---|---|---|---|---|---|---|---|---|
| **Byte** | Bit 7 | Bit 6 | Bit 5 | Bit 4 | Bit 3 | Bit 2 | Bit 1 | Bit 0 |
| DBB **66** Axis and spindle | OEM axis signals (reserved) | | | | | | | Activate monitoring /TE6/ |
| DBB **67** | | | | | | | | |
| DBB **68** | PLC axis/ spindle /K5/ | Neutral axis/ spindle /K5/ | Axis replacement possible /K5/ | New type requested by PLC /K5/ | NC axis/spindle in channel /K5/ D | C | B | A |
| DBB **69** | NCU number in NCU link network | | | | | Control parameter block C | B | A |
| DBB **70** | | | | | | Repos delay quit | Repos shift valid | Repos shift |
| DBB **71** | | | | | | | | Brake test active |
| DBB **72** | | | | | | | | REPOS DELAY |
| DBB **73** | | | | | | | | |
| DBB **74** | | | | Modulo limit enabled active | | | | |
| DBB **75** | | | | | | | | |
| DBB **76** Axis | Rounding axis in position | Indexing axis in position /T1/ | Positioning axis /P2/ | Path axis | | | | Scratch pulse /A2/ |
| DBB **77** | | | | | | | | |
| DBB **78** Axis | | | | | | | | |
| | | F function (REAL format) for positioning axis /V1/ | | | | | | |
| | | | | | | | | |
| | | | | | | | | |
| DBB **82** Spindle | | | | | Gear change-over /S1/ | Setpoint gear stage /S1/ C | B | A |
| DBB **83** Spindle | Actual rotat. direction CW /S1/ | Speed monitoring /W1/ (SW 2 and higher) | Spindle in setpoint range /S1/ | Support area limits violated /S8/ (SW 2 and higher) | Geometry monitoring /W1/ (SW 2 and higher) | Set speed increased /S1/ | Set speed limited /S1/ | Speed limit exceeded /S1/ |

© Siemens AG 2004 All Rights Reserved

| DB 31-61 | Continuation: Signals to axis/spindle (PLC → NCK) | | | | | | | |
|---|---|---|---|---|---|---|---|---|
| **Byte** | Bit 7 | Bit 6 | Bit 5 | Bit 4 | Bit 3 | Bit 2 | Bit 1 | Bit 0 |
| DBB **84** Spindle | Active spindle operating mode /S1/ | | | | Tapping without compen-sating chuck /S1/ | CLGON active /S8/ (SW 2 and higher) | SUG active (grinding wheel surface speed) | Const. cutting speed active |
| | Control mode | Oscillation mode | Positioning mode | Synchro-nous mode | | | | |
| DBB **85** Spindle | | | | | | | | |
| DBB **86** Spindle | M function (binary) for spindle /S1/ | | | | | | | |
| DBD **88** Spindle | | | | | | | | |
| | S function (floating-point) for spindle /S1/ | | | | | | | |
| | | | | | | | | |
| | | | | | | | | |
| DBB **92** 611D 1) | | | | RLI active | Speed setpoint smoothing active /A2/ | Torque limit 2 active /A2/ | HLGSS active /A2/ | Set-up mode active /A2/ |
| DBB **93** 611D 1) | Enable pulses /A2/ | n controller integrator disabled /A2/ | Drive ready /A2/ | Active motor /A2/ | | Active drive parameter set /A2/ | | |
| | | | | B | A | C | B | A |
| DBB **94** 611D 1) | Variable signaling fct. /A2/ | $n_{act} = n_{set}$ /A2/ | $\|n_{act}\| < n_x$ /A2/ | $\|n_{act}\| < n_{min}$ /A2/ | Md < Mdx /A2/ | Ramp-up complete /A2/ | Temperature prewarning /A2/ | |
| | | | | | | | Heat sink | Motor |
| DBB **95** 611D 1) | Limitation of power section I2T | | | | | | | $U_{DC-link}$ < alarm threshold /A2/ |
| DBB **96** | Master/ slave active /TE3/ | Bit value for CTRLOUT_changed<br>1 0<br>Change setpoint output assignment (for compile cycles) | | Master/ Slave Compen-sation controller activ | Master/ Slave coarse | Master/ Slave fine | Axis control active | (Stepper motor) error rotation monitoring /S6/ |
| DBB **97** | | | | | Offset after turn-on point /TE6/ | Activate mirroring /TE6/ | Activate link /TE6/ | Axis is slave axis /TE6/ |

1) See note at the end of this subsection

© Siemens AG 2004 All Rights Reserved

| DB 31-61 | Continuation: Signals to axis/spindle (PLC → NCK) | | | | | | | |
|---|---|---|---|---|---|---|---|---|
| **Byte** | Bit 7 | Bit 6 | Bit 5 | Bit 4 | Bit 3 | Bit 2 | Bit 1 | Bit 0 |
| DBB **98** Synchro-nous spindle | Emergenc y retraction active | Accel. warning threshold reached | Speed warning threshold reached | Overlaid motion /S3/ (SW2 and higher) | | Actual value coupling /S3/ (SW2 and higher) | Synchronism (SW 2 and higher) /S3/ coarse | fine |
| DBB **99** Synchro-nous spindle | Emergenc y retraction enabled | Max. acce-leration reached | Max. speed reached | Synchro-nization running | Axis acce-lerating | | Slave spindle active (SW 2 and higher) /S3/ | Master spindle active (SW 2 and higher) /S3/ |
| DBB **100** Grinding (SW 2 and higher) | Oscillation active /P5/ | Oscillation motion active /P5/ | Spark-out active /P5/ | Error in oscillation /P5/ | Oscillation cannot start /P5/ | | | |
| DBB **101** Gantry (SW 2 and higher) | Gantry axis /G1/ | Gantry leading axis /G1/ | Gantry grouping is synchro-nous /G1/ | Gantry synchroni-zation run ready to start /G1/ | Gantry warning limit exceeded /G1/ | Gantry cut-off limit exceeded /G1/ | | |
| DBB **102,103** | | | | | | | | |
| DBB **104** Grinding (SW2 and higher) | Active infeed axis /P5/ Axis 8 | Axis 7 | Axis 6 | Axis 5 | Axis 4 | Axis 3 | Axis 2 | Axis 1 |
| DBB **105** | Active infeed axis /P5/ Axis 16 | | | | | | | Axis 9 |
| DBB **106** | Active infeed axis /P5/ Axis 24 | | | | | | | Axis 17 |
| DBB **107** | Active infeed axis /P5/ | Axis 31 | Axis 30 | | | | | Axis 25 |
| DBB **108** 1) | SINUMERIK Safety Integrated / / Axis safely referenced | | | | | Status pulses deleted | | Safe operational stop / safe speed active |

1) See note at the end of this subsection

| DB 31-61 | Continuation: Signals from axis/spindle (NCK → PLC) | | | | | | | |
|---|---|---|---|---|---|---|---|---|
| **Byte** | Bit 7 | Bit 6 | Bit 5 | Bit 4 | Bit 3 | Bit 2 | Bit 1 | Bit 0 |
| DBB **109** 1) | SINUMERIK Safety Integrated Actual position > cam position SC 4- | SC 4+ | SC 3- | SC 3+ | SC 2- | SC 2+ | SC 1- | SC 1+ |
| DBB **110** 1) | SINUMERIK Safety Integrated | | n < nx | Safe velocity active bit | Safe velocity active bit | | Safe zero speed | |

© Siemens AG 2004 All Rights Reserved

| | | | | | | | | |
|---|---|---|---|---|---|---|---|---|
| | | | | value 1 | value 0 | | active | |
| DBB **111** 1) | Reserved for SINUMERIK Safety Integrated / / | | | | | | | |
| | Stop E active | Stop D active | Stop C active | Stop A/B active | | | | |

**Note**

This note is refers to the signal bytes marked with 1) in column 1 in the above table.

These signal bytes are directly transferred to the interface independently of any configured link communication.

© Siemens AG 2004 All Rights Reserved

## 4.2.15 Interface for loading/unloading magazine (DB 71)

| DB 71 | Interface for loading/unloading magazine (NCK→PLC) | | | | | | | |
|---|---|---|---|---|---|---|---|---|
| **Byte** | Bit 7 | Bit 6 | Bit 5 | Bit 4 | Bit 3 | Bit 2 | Bit 1 | Bit 0 |
| DBB **0** | Interface (I) active | | | | | | | |
| | I8 | I7 | I6 | I5 | I4 | I3 | I2 | I1 |
| DBB **1** | | | | | | | | |
| | I16 | I15 | I14 | I13 | I12 | I11 | I10 | I9 |
| DBB **2,3** | | | | | | | | |
| DBB **n** | res. | res. | res. | NC program positions magazine | Position at loading point | Reload | Unload | Load |
| DBB **n + 2** | Assigned channel (8 bit Int) | | | | | | | |
| DBB **n + 3** | Tool management no. (8 bit Int) | | | | | | | |
| DBD **n + 4** | Unassigned parameter 1 (D word) | | | | | | | |
| DBD **n + 8** | Unassigned parameter 2 (D word) | | | | | | | |
| DBD **n + 12** | Unassigned parameter 3 (D word) | | | | | | | |
| DBW **n + 16** | Identification for loading/unloading station (Int), (fixed value 9999) | | | | | | | |
| DBW **n + 18** | No. of loading station (Int) | | | | | | | |
| DBW **n + 20** | Magazine no. (source) for unloading/reloading/positioning (Int) | | | | | | | |
| DBW **n + 22** | Location no. (source) for unloading/reloading/positioning (Int) | | | | | | | |
| DBW **n + 24** | Magazine no. (target) for loading/reloading/positioning (Int) | | | | | | | |
| DBW **n + 26** | Location no. (target) for loading/reloading/positioning (Int) | | | | | | | |
| DBW **n + 28** | Reserved | | | | | | | |

Initial addresses of the loading/unloading stations:
Loading/unloading station 1: n= 4 Loading/unloading station 3: n= 64
Loading/unloading station 2: n= 34 Loading/unloading station 4: n= 94

Load interface 1 is responsible for spindle loading and reloading of tools, for relocating tools and for positioning at any location (e.g. buffer).

**References:** /FBW/, "Description of Functions Tool Management"

© Siemens AG 2004 All Rights Reserved

## 4.2.16 Interface for spindle as change position (DB 72)

| DB 72 | Signals from spindle (NCK→PLC) | | | | | | | |
|---|---|---|---|---|---|---|---|---|
| **Byte** | Bit 7 | Bit 6 | Bit 5 | Bit 4 | Bit 3 | Bit 2 | Bit 1 | Bit 0 |
| DBB **0** | Interface (I) active | | | | | | | |
| | I8 | I7 | I6 | I5 | I4 | I3 | I2 | I1 |
| DBB **1** | | | | | | | | |
| | I16 | I15 | I14 | I13 | I12 | I11 | I10 | I9 |
| DBB **2,3** | | | | | | | | |
| DBB **n** | res. | Replace manual tool | Replace manual tool. | OldT in buffer no. (n-42) | T0 | Prepare change | Perform change (initiate: M06) | Compul-sory change |
| DBB **n + 1** | Unassigned | | | | | | | |
| DBB **n + 2** | Assigned channel (8 bit Int) | | | | | | | |
| DBB **n + 3** | Tool management no. (8 bit Int) | | | | | | | |
| DBD **n + 4** | Unassigned parameter 1 (D word) | | | | | | | |
| DBD **n + 8** | Unassigned parameter 2 (D word) | | | | | | | |
| DBD **n + 12** | Unassigned parameter 3 (D word) | | | | | | | |
| DBW **n + 16** | Buffer identification (Int), (fixed value 9998) (corresponds to "Target position for new tool") | | | | | | | |
| DBW **n + 18** | Relative location (target) in the buffer (Int) | | | | | | | |
| DBW **n + 20** | Magazine no. (source) for new tool (Int) | | | | | | | |
| DBW **n + 22** | Location no. (source) for new tool (Int) | | | | | | | |
| DBW **n + 24** | Magazine no. (target) for old tool (Int) | | | | | | | |
| DBW **n + 26** | Location no. (target) for old tool (Int) | | | | | | | |
| DBW **n + 28** | Tool new: location type (Int) | | | | | | | |
| DBW **n + 30** | Tool new: size left (Int) | | | | | | | |
| DBW **n + 32** | Tool new: size right (Int) | | | | | | | |
| DBW | Tool new: size top (Int) | | | | | | | |

© Siemens AG 2004 All Rights Reserved

| | | | | | | | | |
|---|---|---|---|---|---|---|---|---|
| **n + 34** | | | | | | | | |
| DBW **n + 36** | Tool new: size bottom (Int) | | | | | | | |
| DBB **n + 38** | Tool status for tool new | | | | | | | |
| | Tool was in use | Tool fixed location coded | | Prewarning limit reached | Tool measured | | Tool enabled | Active tool |
| DBW **n + 40** | Tool new: T no. (Int) | | | | | | | |
| DBW **n + 42** | If DBX (n+0.4) = 1, then buffer location of old tool is entered here. | | | | | | | |
| DBW **n + 44** | Original magazine of new tool (SW 6.4 and higher) | | | | | | | |
| DBW **n + 46** | Original location of new tool (SW 6.4 and higher) | | | | | | | |
| Initial addresses of the buffers:<br>Spindle 1:n= 4<br>Spindle 2:n = 52 | | | | | | | | |

**References:** /FBW/, ”Description of Functions, Tool Management”

© Siemens AG 2004 All Rights Reserved

## 4.2.17 Interface for circular magazine (DB 73)

| DB73 | Signals from circular magazine (NCK→PLC) | | | | | | | |
|---|---|---|---|---|---|---|---|---|
| **Byte** | Bit 7 | Bit 6 | Bit 5 | Bit 4 | Bit 3 | Bit 2 | Bit 1 | Bit 0 |
| DBB **0** | Interface (I) active | | | | | | | |
| | I8 | I7 | I6 | I5 | I4 | I3 | I2 | I1 |
| DBB **1** | | | | | | | | |
| | I16 | I15 | I14 | I13 | I12 | I11 | I10 | I9 |
| DBB **2,3** | | | | | | | | |
| DBB **n** | res. | res. | res. | res. | T0 | res. | Perform change (initiation: T no.) | Obligatory change |
| DBB **n + 1** | Unassigned | | | | | | | |
| DBB **n + 2** | Assigned channel (8 bit Int) | | | | | | | |
| DBB **n + 3** | Tool management no. (8 bit Int) | | | | | | | |
| DBD **n + 4** | Unassigned parameter 1 (D word) | | | | | | | |
| DBD **n + 8** | Unassigned parameter 2 (D word) | | | | | | | |
| DBD **n + 12** | Unassigned parameter 3 (D word) | | | | | | | |
| DBW **n + 16** | Reserved | | | | | | | |
| DBW **n + 18** | Reserved | | | | | | | |
| DBW **n + 20** | Circular magazine no. (Int) | | | | | | | |
| DBW **n + 22** | Location no. for new tool (Int) | | | | | | | |
| DBW **n + 24** | Reserved | | | | | | | |
| DBW **n + 26** | Location no. for old tool (Int) | | | | | | | |
| DBW **n + 28** | Tool new: location type (Int) | | | | | | | |

© Siemens AG 2004 All Rights Reserved

| | | | | | | | | |
|---|---|---|---|---|---|---|---|---|
| DBW **n + 30** | Tool new: size left (Int) | | | | | | | |
| DBW **n + 32** | Tool new: size right (Int) | | | | | | | |
| DBW **n + 34** | Tool new: size top (Int) | | | | | | | |
| DBW **n + 36** | Tool new: size bottom (Int) | | | | | | | |
| DBB **n + 38** | Tool status for tool new | | | | | | | |
| | Tool was in use | Tool fixed location coded | | Prewarning limit reached | Tool measured | | Tool enabled | Active tool |
| DBW **n + 40** | Tool new: T no. (Int) | | | | | | | |
| DBW **n + 42** | Original location of new tool in this circular magazine (SW 6.3 and higher) | | | | | | | |
| Initial addresses of the circular magazines: circular magazine 1: n = 4<br>2: n = 48 | | | | | | | | |

**References:** /FBW/, ”Description of Functions, Tool Management”

## 4.2.18 Signals to and from the machine control panel and HHU (840Di with MCI2 only) (DB 77)

| **DB77** | **Signals to and from the machine control panel and HHU** | | | | | | | |
|---|---|---|---|---|---|---|---|---|
| **Byte** | Bit 7 | Bit 6 | Bit 5 | Bit 4 | Bit 3 | Bit 2 | Bit 1 | Bit 0 |
| DBB **0** to DBB **7** | Input signals from MCP1 to PLC, MPI Bus (GD communication) | | | | | | | |
| DBB **8** to DBB **15** | Output signals from MCP1 to PLC, MPI Bus (GD communication) | | | | | | | |
| DBD **16** | Status send MCP1, MPI bus (GD communication) | | | | | | | |
| DBD **20** | Status receive MCP1, MPI bus (GD communication) | | | | | | | |
| DBB **24** to DBB **31** | Input signals from MCP2 to PLC, MPI bus (GD communication) | | | | | | | |
| DBB **32** to DBB **39** | Output signals from MCP2 to PLC, MPI bus (GD communication) | | | | | | | |
| DBD **40** | Status send MCP2, MPI bus (GD communication) | | | | | | | |
| DBD **44** | Status receive MCP2, MPI bus (GD communication) | | | | | | | |
| DBB **48** to | Input signals from HHU to PLC, MPI bus (GD communication) | | | | | | | |

© Siemens AG 2004 All Rights Reserved

| DB77 | Signals to and from the machine control panel and HHU | | | | | | | |
|---|---|---|---|---|---|---|---|---|
| **Byte** | Bit 7 | Bit 6 | Bit 5 | Bit 4 | Bit 3 | Bit 2 | Bit 1 | Bit 0 |
| DBB **53** | | | | | | | | |
| DBB **60** to DBB **79** | Output signals from PLC to HHU, MPI bus (GD communication) | | | | | | | |
| DBD **80** | Status Send HHU, MPI bus (GD communication) | | | | | | | |
| DBD **84** | Status Receive HHU, MPI bus (GD communication) | | | | | | | |

FB1- parameter:
MCPNum :=1, //correct number of MCPs
MCP1In :=P#DB77.DBX0.0,
MCP1Out := P#DB77.DBX8.0,
MCP1StatSend := P#DB77.DBX16.0,
MCP1StatRec := P#DB77.DBX20.0,
MCP2In :=P#DB77.DBX24.0,
MCP2Out := P#DB77.DBX32.0,
MCP2StatSend := P#DB77.DBX40.0,
MCP2StatRec := P#DB77.DBX44.0,
MCPSDB210 := TRUE,

BHG: :=1; //handheld unit interface:
//0 - no HHU
//1 – HHU to MPI
//2 – HHU to OPI
BHGIn :=P#DB77.DBX48.0, //transmitted data of handheld unit
BHGOut: :=P#DB77.DBX60.0, //received data of handheld unit
BHGStatSend: :=P#DB77.DBX80.0, // status DW for transmitting handheld unit
BHGStatRec: :=P#DB77.DBX84.0, // status DW for receiving HHU

## 4.2.19 Signals to/from ManualTurn, ShopMill, ShopTurn (DB 82)

A list of the signals of DB 82 can be found in:
**References:** /FBMA/, Description of Functions ManualTurn
/FBSP/, Description of Functions ShopMill
/FBT/, Description of Functions ShopTurn

of Functions ShopTurn

■

© Siemens AG 2004 All Rights Reserved

## Für Notizen

© Siemens AG 2004 All Rights Reserved

# 5

# 5 PLC-Blocks

5.1 Overview of organization blocks ..... 5-788
5.2 Overview of function blocks ..... 5-789
5.3 Assignment of data blocks ..... 5-791
5.4 Assigned timers ..... 5-792

© Siemens AG 2004 All Rights Reserved

# 5.1 Overview of organization blocks

| Table | Overview of organization blocks (OBs) | | |
|---|---|---|---|
| **OB no.** | **Designation** | **Meaning** | **Kit** |
| 1 | ZYKLUS | Cyclic processing | GP |
| 40 | ALARM | Process alarms | GP |
| 100 | NEUSTART | Beginning of restart | GP |

© Siemens AG 2004 All Rights Reserved

# 5.2 Overview of function blocks

| Table Overview of **function blocks (FCs)** | | | |
|---|---|---|---|
| **FC no.** | **Designation** | **Meaning** | **Kit** |
| 0 | - | Reserved for Siemens | |
| 2 | GP_HP | Basic program, cyclic part | GP |
| 3 | GP_PRAL | Basic program, alarm-controlled part | GP |
| 5 | GP_DIAG | Basic program, diagnostic alarm (FM-NC) | GP |
| 7 | TM_REV | Transfer block for tool change with circular magazine | GP |
| 8 | TM_TRANS | Transfer block for tool management | GP |
| 9 | ASUP | Asynchronous subprograms | GP |
| 10 | AL_MSG | Alarms/messages | GP |
| 12 | AUXFU | Call interface for user auxiliary functions | GP |
| 13 | BHG_DISP | Display control for handheld unit | GP |
| 15 | POS_AX | Positioning axis | GP |
| 16 | PART_AX | Indexing axis | GP |
| 17 | | Y-D switchover | GP |
| 18 | SpinCtrl | Spindle control from PLC | GP |
| 19 | MCP_IFM | Distribution of machine control panel and MMC signals to interface (milling machine) | GP |
| 21 | | Transfer data exchange PLC-NCK | GP |
| 22 | TM_DIR | Selection of direction | GP |
| 24 | MCP_IFM2 | Transfer of MCP signals to interface | GP |
| 25 | MCP_IFT | Distribution of machine control panel and MMC signals to interface | GP |
| 26 | HPU_MCP | Distribution of HPU signals to interface | |
| 30 - 35 | | Assigned if ManualTurn, ShopMill or ShopTurn are installed | |
| 36 - 127 | | **User assignable with FM-NC, 810DE** | |
| 36 - 255 | | **User assignable with 810D, 840DE, 840D** | |

© Siemens AG 2004 All Rights Reserved

| Table Overview of **function blocks (FBs)** | | | |
|---|---|---|---|
| **FB no.** | **Designation** | **Meaning** | **Kit** |
| 0 - 29 | | Reserved for Siemens | |
| 1 | RUN_UP | Basic program, booting | GP |
| 2 | GET | Read NC variables | GP |
| 3 | PUT | Write NC variables | GP |
| 4 | PI_SERV | PI services | GP |
| 5 | GETGUD | Read GUD variable | GP |
| 7 | PI_SERV2 | General PI services | GP |
| 29 | | Diagnostics for signal recorder and data trigger | GP |
| 36 - 127 | | **User assignable with FM-NC, 810DE** | |
| 36 - 255 | | **User assignable with 810D, 840DE, 840D** | |

© Siemens AG 2004 All Rights Reserved

# 5.3 Assignment of data blocks

**Note**

Only so many DBs are created as are necessary according to NC-MD.

Table **Fehler! Formatvorlage nicht definiert.**-1 Overview of data blocks

| DB no. | Designation | Meaning | Kit |
|---|---|---|---|
| 1 | | Reserved for Siemens | GP |
| 2 - 4 | PLC MSG | PLC messages | GP |
| 5 - 8 | | Basic program | |
| 9 | NC COMPILE | Interface for NC compile cycles | GP |
| 10 | NC INTERFACE | Central NC interface | GP |
| 11 | BAG 1 | Mode group interface | GP |
| 12 | | Computer link and transport system | |
| 13-14 | | Reserved (Hymnos, basic program) | |
| 15 | | Basic program | |
| 16 | | PI service definitions | |
| 17 | | Version code | |
| 18 | | SPL interface (Safety Integrated) | |
| 19 | | MMC interface | |
| 20 | | PLC machine data | |
| 21 - 30 | CHANNEL 1 | NC channel interface | GP |
| 31 - 61 | AXIS 1,... | Reserved for interface axis/spindle no. 1 to 31 | GP |
| 62 - 70 | | **User assignable** | |
| 71 - 74 | | User tool management | GP |
| 75 - 76 | | M group decoding | GP |
| 77 | | Tool management buffer | |
| 78 - 80 | | Reserved for Siemens | |
| 81 - 89 | | Assigned if ManualTurn, ShopMill or ShopTurn are installed | |
| (81)90 - 127 | | **User assignable FM-NC, 810DE, see below** | |
| (81)90 - 399 | | **User assignable 810D, 840DE, 840D, see below** | |

**Note**

Data blocks of inactivated channels, axes/spindles, C programming, tool management can be assigned by the user.

© Siemens AG 2004 All Rights Reserved

# 5.4 Assigned timers

| Timer no. | Meaning |
|---|---|
| 1 - 9 | Reserved |
| 10 - 127 | User assignable |

■

© Siemens AG 2004 All Rights Reserved

# A

# A Appendix

## References

An overview of publications which is updated each month and shows the languages available is provided on the Internet at:

http://www.siemens.com/motioncontrol

via "Support", "Technical documentation", "Overview of publications"

**General Documentation**

**/BU/** SINUMERIK & SIMODRIVE, Automation Systems for Machine Tools
Catalog NC 60

**/IKPI/** Industrial Communication and Field Devices
Catalog IK PI

**/ST7/** SIMATIC
Products for Totally Integrated Automation and Micro Automation
Catalog ST 70

**/Z/** MOTION-CONNECT
Connections & System Components for SIMATIC, SINUMERIK, MASTERDRIVES, and SIMOTION
Catalog NC Z

Safety Integrated
Application Manual
The Safety System for the Industries of the World

**Electronic Documentation**

**/CD1/** The SINUMERIK System
**DOC ON CD**
(includes all SINUMERIK 840D/840Di/810D/802 and SIMODRIVE publications)

© Siemens AG 2004 All Rights Reserved

| | User Documentation |
|---|---|
| **/AUK/** | SINUMERIK 840D/810D/FM-NC<br>**AutoTurn** Short Operating Guide |
| **/AUP/** | SINUMERIK 840D/840Di/810D<br>**AutoTurn Graphic Programming System**<br>Programming / Setup |
| **/BA/** | SINUMERIK 840D/810D/FM-NC<br>**MMC** Operator's Guide |
| **/BAD/** | SINUMERIK 840D/840Di/810D<br>Operator's Guide: **HMI Advanced** |
| **/BAH/** | SINUMERIK 840D/840Di/810D<br>Operator's Guide **HT 6** |
| **/BAK/** | SINUMERIK 840D/840Di/810D<br>**Short Operating Guide** |
| **/BAM/** | SINUMERIK 810D/840D<br>**ManualTurn** Operator's Guide |
| **/BAS/** | SINUMERIK 840D/840Di/810D<br>Operator's Guide **ShopMill** |
| **/BAT/** | SINUMERIK 840D/840Di/810D<br>Operator's Guide **ShopTurn** |
| **/BEM/** | SINUMERIK 840D/810D<br>Operator's Guide: **HMI Embedded** |
| **/BNM/** | SINUMERIK 840D/840Di//810D<br>User's Guide **Measuring Cycles** |
| **/BTDI/** | SINUMERIK 840D/840Di//810D<br>Motion Control Information System (MCIS)<br>User's Guide **Tool Data Information** |
| **/CAD/** | SINUMERIK 840D/840Di/810D<br>Operator's Guide **CAD Reader** |
| **/DA/** | SINUMERIK 840D/840Di/810D<br>**Diagnostics Guide** |
| **/KAM/** | SINUMERIK 840D/810D<br>Short Guide **ManualTurn** |
| **/KAS/** | SINUMERIK 840D/810D<br>Short Guide **ShopMill** |
| **/KAT/** | SINUMERIK 840D/810D<br>Short Guide **ShopTurn** |

© Siemens AG 2004 All Rights Reserved

| | |
|---|---|
| **/PG/** | SINUMERIK 840D/840Di/810D<br>Programming Guide **Fundamentals** |
| **/PGA/** | SINUMERIK 840D/840Di/810D<br>Programming Guide **Advanced** |
| **/PGA1/** | SINUMERIK 840D/840Di/810D<br>Lists Manual **System Variables** |
| **/PGK/** | SINUMERIK 840D/840Di/810D/FM-NC<br>Short Guide **Programming** |
| **/PGM/** | SINUMERIK 840D/840Di/810D<br>Programming Guide **ISO Milling** |
| **/PGT/** | SINUMERIK 840D/840Di/810D<br>Programming Guide **ISO Turning** |
| **/PGZ/** | SINUMERIK 840D/840Di//810D<br>Programming Guide **Cycles** |
| **/PI /** | PCIN 4.4<br>Software for Data Transfer to/from **MMC Modules** |
| **/SYI/** | SINUMERIK 840Di<br>**System Overview** |

© Siemens AG 2004 All Rights Reserved

| | Manufacturer/Service Documentation |
|---|---|
| **a) Lists** | |
| **/LIS/** | SINUMERIK 840D/840Di/810D<br>SIMODRIVE 611D<br>**Lists** |
| ***b) Hardware*** | |
| **/ASAL/** | SIMODRIVE 611, MASTERDRIVES VC/MC<br>Planning Guide<br>**General Part for AC Asynchronous Motors** |
| **/APH2/** | SIMODRIVE 611<br>***AC Asynchronous Motors 1PH2*** |
| **/APH4/** | SIMODRIVE 611<br>***s 1PH4*** |
| **/APH7S/** | SIMODRIVE 611<br>Planning Guide<br>**Asynchronous Motors Main Spindle Drives 1PH7** |
| **/APH7M/** | SIMODRIVE 611<br>Planning Guide<br>**Asynchronous Motors Main Spindle Drives 1PH7** |
| **/APL6/** | MASTERDRIVES VC/MC<br>Planning Guide<br>**Asynchronous Motors 1PL6** |
| **/BH/** | SINUMERIK 840D840Di//810D<br>**Operator Components** Manual |
| **/BHA/** | SIMODRIVE Sensor<br>**Absolute Encoder with Profibus DP** User's Guide (HW) |
| **/EMC/** | SINUMERIK, SIROTEC, SIMODRIVE,<br>SIMOTION, SINAMICS<br>Planning Guide **EMC Installation Guide**<br><br>The up-to-date declaration of conformity can be viewed on the Internet at<br>http://www4.ad.siemens.com/<br>Please enter the ID number 15257461 in the "Search" field (top right) and click on "go". |
| **/GHA/** | SINUMERIK / SIMOTION<br>**ADI4 - Analog Drive Interface for 4 Axes**<br>Manual |
| **/PFK6/** | SIMODRIVE 611, MASTERDRIVES MC<br>Planning Guide<br>**AC Servo Motors 1FK6** |
| **/PFK7/** | SIMODRIVE 611, MASTERDRIVES MC<br>Planning Guide<br>**AC Servo Motors 1FK7** |
| **PFS6/** | MASTERDRIVES<br>Planning Guide<br>**AC Servo Motors 1FS6 explosionproof** |

© Siemens AG 2004 All Rights Reserved

| | |
|---|---|
| **/PFT5/** | SIMODRIVE 611<br>Planning Guide<br>**AC Servo Motors 1FT5** |
| **/PFT6/** | SIMODRIVE 611, MASTERDRIVES MC<br>Planning Guide<br>**Synchronous Servo Motors 1FT6** |
| **/PFU/** | SINAMICS, MASTERDRIVES,<br>MICROMASTER<br>**SIEMOSYN Motors 1FU8** |
| **/PHC/** | SINUMERIK 810D<br>**Configuring** Manual **CCU** |
| **/PHD/** | SINUMERIK 840D<br>**Configuring** Manual **NCU** |
| **/PJAL/** | SIMODRIVE 611, MASTERDRIVES MC<br>Planning Guide<br>**Synchronous Servo Motors General Part** |
| **/PJAS/** | SIMODRIVE 611, MASTERDRIVES VC/MC<br>Planning Guide for Asynchronous Motors<br>Contents: **General Part, 1PH2, 1PH4, 1PH7, 1PL6** |
| **/PJFE/** | SIMODRIVE<br>Planning Guide<br>AC Motors for Main Spindle Drives<br>**1FE1 Synchronous Built-in Motors** |
| **/PJF1/** | SIMODRIVE<br>Installation Guide<br>Three-Phase AC Motors for Main Spindle Drives<br>**Built-In Synchronous Motors 1FE1 051.-1FE1 147** |
| **/PJLM/** | SIMODRIVE<br>Planning Guide **Linear Motors 1FN1, 1FN3**<br>ALL General Information on the Linear Motor<br>1FN1 AC Linear Motor 1FN1<br>1FN3 AC Linear Motor 1FN3<br>CON Connections |
| **/PJM2/** | SIMODRIVE, MASTERDRIVES MC<br>Planning Guide **Servo Motors**<br>Contents: General Part, 1FT5, 1FT6, 1FK6, 1FK7, 1FS6 |
| **/PJTM/** | SIMODRIVE<br>Planning Guide **Built-In Torque Motors 1FW6** |
| **/PJU/** | SIMODRIVE 611<br>Planning Guide **Converters** |
| **/PKTM/** | SIMODRIVE, SIMOVERT MASTERDRIVES<br>Planning Guide **Complete Torque Motors 1FW3** |

© Siemens AG 2004 All Rights Reserved

**/PMH/** SIMODRIVE Sensor
Planning/Installation Guide
**Hollow-Shaft Measuring System SIMAG H**

**/PMH2/** SIMODRIVE, SIMOVERT MASTERDRIVES, SINAMICS
Planning/Installation Guide
**Hollow-Shaft Measuring System SIMAG H2**

**/PMHS/** SIMODRIVE
Installation Guide **Measuring System for Main Spindle Drives**
**Gear Wheel Encoder SIZAG2**

**/PMS/** SIMODRIVE
Planning Guide
**ECO Motor Spindle 2SP1**

**/PPM/** SIMODRIVE
Planning Guide
Hollow-Shaft Motors for Main Spindle Drives **1PM4 / 1PM6**

**c) Software**

**/FB1/** SINUMERIK 840D/840Di/810D
Description of Function **Basic Machine (Part 1)**
(the various manuals are listed below)

| | |
|---|---|
| A2 | Various Interface Signals |
| A3 | Axis Monitoring, Protection Zones |
| B1 | Continuous Path Mode, Exact Stop and Look Ahead |
| B2 | Acceleration |
| D1 | Diagnostic Tools |
| D2 | Interactive Programming |
| F1 | Travel to Fixed Stop |
| G2 | Velocites, Setpoint/Actual Value Systems, Closed-Loop Control |
| H2 | Output of Auxiliary Functions to PLC |
| K1 | Mode Group, Channels, Program Operation Mode |
| K2 | Axis Types, Coordinate Systems, Frames, Actual-Value System for Workpiece, External Zero Offset |
| K4 | Communication |
| N2 | EMERGENCY STOP |
| P1 | Traverse Axes |
| P3 | Basic PLC Program |
| R1 | Reference Point Approach |
| S1 | Spindles |
| V1 | Feeds |
| W1 | Tool Compensation |

© Siemens AG 2004 All Rights Reserved

**/FB2/**

SINUMERIK 840D/840Di/810D
Description of Functions **Extended Functions (Part 2)**
(the various manuals are listed below)

| | |
|---|---|
| A4 | Digital and Analog NCK I/Os |
| B3 | Several Operator Panels and NCUs |
| B4 | Operation via PG/PC |
| F3 | Remote Diagnostics |
| H1 | Jog with/without Handwheel |
| K3 | Compensations |
| K5 | Mode Groups, Channels, Axis Replacement |
| L1 | FM-NC Local Bus |
| M1 | Kinematic Transformation |
| M5 | Measurements |
| N3 | Software Cams, Position Switching Signals |
| N4 | Punching and Nibbling |
| P2 | Positioning Axes |
| P5 | Oscillation |
| R2 | Rotary Axes |
| S3 | Synchronous Spindles |
| S5 | Synchronized Actions (SW 3 and lower, higher /FBSY/) |
| S6 | Stepper Motor Control |
| S7 | Memory Configuration |
| T1 | Indexing Axes |
| W3 | Tool Change |
| W4 | Grinding |

**/FB3/**

SINUMERIK 840D/840Di/810D
Description of Functions **Special Functions (Part 3)**
(the various manuals are listed below)

| | |
|---|---|
| F2 | 3-Axis to 5-Axis Transformation |
| G1 | Gantry Axes |
| G3 | Cycle Times |
| K6 | Contour Tunnel Monitoring |
| M3 | Coupled Axes and ESR |
| S9 | Setpoint Switching (S9) |
| T3 | Tangential Control |
| TE0 | Installation and Activation of Compile Cycles |
| TE1 | Clearance Control |
| TE2 | Analog Axis |
| TE3 | Speed/Torque Coupling Master-Slave |
| TE4 | Transformation Package Handling |
| TE6 | MCS Coupling |
| TE7 | Retrace Support |
| TE8 | Unclocked Path-Synchronous Switching Signal Output |
| V2 | Preprocessing |
| W5 | 3D Tool Radius Compensation |

© Siemens AG 2004 All Rights Reserved

**/FBA/** SIMODRIVE 611digital/SINUMERIK 840D/810D
Description of Functions **Drive Functions**
(the various sections are listed below)

DB1 Operational Messages/Alarm Reactions
DD1 Diagnostic Functions
DD2 Speed Control Loop
DE1 Extended Drive Functions
DF1 Enable Commands
DG1 Encoder Parameterization
DL1 Linear Motor MD
DM1 Calculation of Motor/Power Section Parameters and Controller Data
DS1 Current Control Loop
DÜ1 Monitors/Limitations

**/FBAN/** SINUMERIK 840D/SIMODRIVE 611 digital
Description of Functions **ANA Module**

**/FBD/** SINUMERIK 840D
Description of Functions **Digitizing**

DI1 Start-Up
DI2 Scanning with Tactile Sensors (scancad scan)
DI3 Scanning with Lasers (scancad laser)
DI4 Milling Program Generation (scancad mill)

**/FBDM/** SINUMERIK 840D/840Di/810D
Description of Functions **NC Program Management**
DNC Machines

**/FBDN/** SINUMERIK 840D/840Di/810D
Motion Control Information System (MCIS)
Description of Functions **NC Program Management DNC**
DN1 DNC Plant / DNC Cell
DN2 DNC IFC SINUMERIK

**/FBFA/** SINUMERIK 840D/840Di/810D
Description of Functions **ISO Dialects for SINUMERIK**

**/FBFE/** SINUMERIK 840D/810D
Description of Functions **Remote Diagnostics**

FE1 Remote Diagnosis (ReachOut)
FE3 Remote Diagnosis (pcAnywhere)

**/FBH/** SINUMERIK 840D/840Di/810D
**HMI programming package**

Part 1 User's Guide
Part 2 Description of Functions

© Siemens AG 2004 All Rights Reserved

| | |
|---|---|
| **/FBH1/** | SINUMERIK 840D/840Di/810D<br>**HMI programming package**<br>**ProTool/Pro Option SINUMERIK** |
| **/FBHL/** | SIMODRIVE 611 digital / SINUMERIK 840D<br>Function Description **HLA Module** |
| **/FBIC/** | SINUMERIK 840D/840Di/810D<br>Motion Control Information System (MCIS)<br>Description of Functions **TDI Ident Connection** |
| **/FBMA/** | SINUMERIK 840D/810D<br>Description of Functions **ManualTurn** |
| **/FBO/** | SINUMERIK 840D/810D<br>Description of Functions Configuring of **Operator Interface OP 030**<br>(the various sections are listed below)<br><br>BA Operator's Guide<br>EU Development Environment (Configuring Package)<br>PSE Introduction to Configuring of Operator Interface<br>(IK Screen Kit: Software Update and Configuration) |
| **/FBP/** | SINUMERIK 840D<br>Description of Functions **C-PLC Programming** |
| **/FBR/** | SINUMERIK 840D/840Di/810D<br>IT Solutions<br>Description of Functions **Computer Link (SinCOM)**<br><br>HCI Interface for host computer<br>NPL PLC/NCK interface |
| **/FBSI/** | SIMODRIVE 611digital/SINUMERIK 840D<br>Description of Functions SINUMERIK **Safety Integrated** |
| **/FBSP/** | SINUMERIK 840D/840Di/810D<br>Description of Functions **ShopMill** |
| **/FBST/** | SIMATIC<br>Description of Functions **FM STEPDRIVE/SIMOSTEP** |
| **/FBSY/** | SINUMERIK 840D/810D<br>Description of Functions **Synchronized Actions** |
| **/FBT/** | SINUMERIK 840D/810D<br>Description of Functions **ShopTurn** |
| **/FBTC/** | SINUMERIK 840D/810D<br>IT Solutions<br>Description of Functions **Tool Data Communication SinTDC** |

© Siemens AG 2004 All Rights Reserved

| | |
|---|---|
| **/FBTD/** | SINUMERIK 840D/810D<br>IT Solutions<br>Description of Functions **Tool Management SinTDI**<br>with Online Help |
| **/FBTP/** | SINUMERIK 840D/840Di/810D<br>Motion Control Information System (MCIS)<br>Description of Functions **Preventive maintenance TPM** |
| **/FBU/** | SIMODRIVE 611 universal/universal E<br>Description of Functions **Closed-Loop Control Component for Speed Control and Positioning** |
| **/FBU2/** | SIMODRIVE 611 **universal**<br>Installation Guide<br>(included with every SIMODRIVE 611) |
| **/FBW/** | SINUMERIK 840D/840Di/810D<br>Description of Functions **Tool Management** |
| **/HBA/** | Manual **@Event**<br>**Alarm-controlled messages by email** |
| **/HBI/** | SINUMERIK 840Di<br>Manual **SINUMERIK 840Di** |
| **/INC/** | SINUMERIK 840D840Di//810D<br>System Overview<br>**Commissioning Tool SINUMERIK SinuCOM NC** |
| **/PJE/** | SINUMERIK 840D/810D<br>Description of Functions **HMI Embedded Configuring Package**<br>Software Update, Configuration, Installation |
| **/PS/** | SINUMERIK 840D/810D<br>Planning Guide Configuring Syntax<br>This publication is part of the supplied software and is available as a PDF file |
| **/POS1/** | SIMODRIVE **POSMO A**<br>User Guide<br>**Decentralized Positioning Motor on PROFIBUS DP** |
| **/POS2/** | SIMODRIVE **POSMO A**<br>Installation Guide (included with every POSMO A) |
| **/POS3/** | SIMODRIVE POSMO SI/CD/CA<br>User Guide **Distributed Servo Drive Systems** |
| **/POS4/** | SIMODRIVE **POSMO SI**<br>Installation Guide (included with every POSMO SI) |
| **/POS5/** | SIMODRIVE **POSMO CD/CA**<br>Installation Guide (included with every POSMO CD/CA) |

© Siemens AG 2004 All Rights Reserved

| | |
|---|---|
| **/S7H/** | SIMATIC S7-300<br>Installation Manual **Technological Functions**<br><br>- Reference Manual: CPU Data (HW Description)<br>- Reference Manual: Module Data |
| **/S7HT/** | SIMATIC S7-300<br>Manual **STEP 7, Fundamentals, V3.1** |
| **/S7HR/** | SIMATIC S7-300<br>Manual **STEP 7, Reference Manuals, V3.1** |
| **/S7S/** | SIMATIC S7-300<br>**FM 353 for Stepper Drive** Positioning Module<br>To be ordered together with configuring package |
| **/S7L/** | SIMATIC S7-300<br>**FM 354 for Servo Drive** Positioning Module<br>To be ordered together with configuring package |
| **/S7M/** | SIMATIC S7-300<br>**FM 357.2 Multi-module** for Servo and Stepper Drives<br>To be ordered together with configuring package |
| **/SP/** | SIMODRIVE 611-A/611-D<br>**SimoPro 3.1**<br>Program for Configuring Machine-Tool Drives |

**d) Start-Up**

| | |
|---|---|
| **/BS/** | SIMODRIVE 611 analog<br>Description **Start-Up Software for**<br>**Main Spindle and Asynchronous Motor Modules Version 3.20** |
| **/IAA/** | SIMODRIVE 611 analog<br>**Installation and Start-Up Guide** |
| **/IAC/** | SINUMERIK 810D<br>**Installation and Start-Up Guide**<br>(including description of SIMODRIVE 611D start-up software) |
| **/IAD/** | SINUMERIK 840D/SIMODRIVE 611D<br>I**nstallation and Start-Up Guide**<br>(including description of SIMODRIVE 611D start-up software) |

© Siemens AG 2004 All Rights Reserved

**/IAM/**

SINUMERIK 840D/840Di/810D
**HMI** Installation and Start-Up Guide

| | |
|---|---|
| AE1 | Updates/Options |
| BE1 | Expanding the Operator Interface |
| HE1 | Online Help |
| IM2 | Start-Up HMI Embedded |
| IM4 | Start-Up HMI Advanced |
| TX1 | Creating Foreign Language Texts with Windows 95 / NT |
| TX2 | Creating Foreign Language Texts with Windows 2000 / XP |

■

© Siemens AG 2004 All Rights Reserved

# I Index

## I.1 Index


$

$$/C/SGA/actToolBasePos with diameter conv. . 3-603
$$actToolBasePosBasic with diameter conv. ..... 3-603
$$actToolBasPosBN with diameter conv. ..... 3-604
$$traceProtocolLock is inactive ..... 3-715

/

/Nck/Nck/ActApplication ..... 3-716
/Nck/Nck/ActBag ..... 3-716
/Nck/Nck/Channel ..... 3-716
/Nck/Nck/CoordSystem ..... 3-716

1

1st measuring point ..... 3-519

2

2nd measuring point ..... 3-519
2nd torque limit ..... 3-492, 3-586

3

3rd measuring point ..... 3-519

4

4th measuring point ..... 3-519

6

611D / enable high-speed inputs/outputs ..... 3-683
611D support ..... 3-434

A

a0-coeff. nth polynominal for synchonous action 3-521
a1-coeff. nth polynominal for synchonous action 3-521
a2-coeff. nth polynominal for synchonous action 3-521
a3-coeff. nth polynominal for synchonous action 3-521
AA_OFF_LIMIT ..... 3-688
AA_OFF_LIMIT:MD 43350 ..... 2-410
AA_OFF_MODE:MD 36750 ..... 2-370
aaAccLimA ..... 3-517
aaActIndexAxPosNo ..... 3-483, 3-577
aaAlarmStat ..... 3-483, 3-577
aaBcsOffset ..... 3-483, 3-577
aaCoupAct ..... 3-483, 3-577
aaCoupOffs ..... 3-483, 3-577
aaCurr ..... 3-483, 3-577
aaDelt ..... 3-601
aaDtbb ..... 3-484, 3-578
aaDtbw ..... 3-601
aaDteb ..... 3-484, 3-578
aaDtepb ..... 3-484, 3-578
aaDtepw ..... 3-601
aaDtew ..... 3-601
aaEgActive ..... 3-517
aaEgAx ..... 3-517
aaEgDenom ..... 3-517
aaEgNumera ..... 3-518
aaEgNumLa ..... 3-518
aaEgSyn ..... 3-518
aaEgSynFa ..... 3-518
aaEgType ..... 3-518
aaEsrEnable ..... 3-484, 3-578
aaEsrStat ..... 3-484, 3-578
aaEsrTrigger ..... 3-484, 3-578
aaIbCorr ..... 3-601
aaIbnCorr ..... 3-484, 3-578
aaIenCorr ..... 3-485, 3-579
aaIwCorr ..... 3-602
aaJerkCount ..... 3-485, 3-579
aaJerkLimA ..... 3-518
aaJerkTime ..... 3-485, 3-579
aaJerkTotal ..... 3-485, 3-579
aaLeadP ..... 3-485, 3-579
aaLeadPTurn ..... 3-485, 3-579
aaLeadSp ..... 3-485, 3-579


© Siemens AG 2004 All Rights Reserved

aaLeadSv ..... 3-485, 3-579
aaLeadTyp ..... 3-485, 3-579
aaLeadV ..... 3-485, 3-579
aaLoad ..... 3-486, 3-580
aaMaslState ..... 3-486, 3-580
aaMeasP1Valid ..... 3-518
aaMeasP2Valid ..... 3-519
aaMeasP3Valid ..... 3-519
aaMeasP4Valid ..... 3-519
aaMeasPoint1 ..... 3-519
aaMeasPoint2 ..... 3-519
aaMeasPoint3 ..... 3-519
aaMeasPoint4 ..... 3-519
aaMeasSetangle ..... 3-519
aaMeasSetpoint ..... 3-519
aaMeasSpValid ..... 3-520
aaMm ..... 3-486, 3-580
aaMm1 ..... 3-486, 3-580
aaMm2 ..... 3-486, 3-580
aaMm3 ..... 3-486, 3-580
aaMm4 ..... 3-486, 3-580
aaMw ..... 3-602
aaMw1 ..... 3-602
aaMw2 ..... 3-602
aaMw3 ..... 3-602
aaMw4 ..... 3-602
aaOff ..... 3-486, 3-580
aaOffLimit ..... 3-486, 3-580
aaOffVal ..... 3-487, 3-581
aaOscillBreakPos1 ..... 3-487, 3-581
aaOscillBreakPos2 ..... 3-487, 3-581
aaOscillReversePos1 ..... 3-487, 3-581
aaOscillReversePos2 ..... 3-487, 3-581
aaOvr ..... 3-487, 3-581
aaPlcOvr ..... 3-487, 3-581
aaPolfa ..... 3-487, 3-581
aaPolfaValid ..... 3-487, 3-581
aaPower ..... 3-487, 3-581
aaSnglAxStat ..... 3-488, 3-582
aaSoftendn ..... 3-488, 3-582
aaSoftendp ..... 3-488, 3-582
aaStat ..... 3-488, 3-582
aaSync ..... 3-488, 3-582
aaTOff ..... 3-602
aaTOffLimit ..... 3-602
aaTOffPrepDiff ..... 3-603
aaTOffVal ..... 3-603
aaTorque ..... 3-488, 3-582
aaTotalOvr ..... 3-488, 3-582
aaTravelCount ..... 3-488, 3-582
aaTravelCountHS ..... 3-489, 3-583
aaTravelDist ..... 3-489, 3-583
aaTravelDistHS ..... 3-489, 3-583
aaTravelTime ..... 3-489, 3-583
aaTravelTimeHS ..... 3-489, 3-583
aaTyp ..... 3-489, 3-583
aaVactB ..... 3-489, 3-583
aaVactM ..... 3-489, 3-583
aaVactW ..... 3-603
aaVc ..... 3-489, 3-583
aaVeloLimA ..... 3-520
ABS_ACTUAL_CURRENT
MD 1719 ..... 2-143
ABS_INC_RATIO:MD 30260 ..... 2-342
ABSBLOCK_ENABLE:MD 42750 ..... 2-405
ABSBLOCK_FUNCTION_MASK:MD 27100 .....
..... 2-326
Abscissa arc centre of 10th contour element .... 3-441,
..... 3-448
Abscissa arc centre of 1st contour element ..... 3-440,
..... 3-447
Abscissa arc centre of 2nd contour element ..... 3-440,
..... 3-447
Abscissa arc centre of 3rd contour element ..... 3-440,
..... 3-447
Abscissa arc centre of 4th contour element ..... 3-440,
..... 3-447
Abscissa arc centre of 5th contour element ..... 3-440,
..... 3-447
Abscissa arc centre of 6th contour element ..... 3-440,
..... 3-447
Abscissa arc centre of 7th contour element ..... 3-440,
..... 3-448
Abscissa arc centre of 8th contour element ..... 3-441,
..... 3-448
Abscissa arc centre of 9th contour element ..... 3-441,
..... 3-448
Abscissa end point of 10th contour element ..... 3-443,
..... 3-450
Abscissa end point of 1st contour element ..... 3-442,
..... 3-449
Abscissa end point of 2nd contour element ..... 3-442,
..... 3-449
Abscissa end point of 3rd contour element ..... 3-442,
..... 3-449
Abscissa end point of 4th contour element ..... 3-442,
..... 3-449
Abscissa end point of 5th contour element ..... 3-442,
..... 3-449
Abscissa end point of 6th contour element ..... 3-442,
..... 3-449
Abscissa end point of 7th contour element ..... 3-442,
..... 3-449
Abscissa end point of 8th contour element ..... 3-442,
..... 3-449
Abscissa end point of 9th contour element ..... 3-450
Absicssa end point of 9th contour element ..... 3-442
Absolute axis index ..... 3-496, 3-506, 3-509, 3-590,
.....3-606, 3-608, 3-614
absoluteBlockBufferName ..... 3-551
absoluteBlockBufferPreview ..... 3-551
absoluteBlockCounter ..... 3-551
AC_FILTER_TIME:MD 32920 ..... 2-356
acAlarmStat ..... 3-520
acAxCtSwA ..... 3-520
ACC_DENOM_FILTER_DAMP1
MD 1573 ..... 2-131
ACC_DENOM_FILTER_DAMP2
MD 1578 ..... 2-131
ACC_DENOM_FILTER_DAMP3
MD 1582 ..... 2-132
ACC_DENOM_FILTER_FREQU1
MD 1572 ..... 2-131

© Siemens AG 2004 All Rights Reserved

ACC_DENOM_FILTER_FREQU2
MD 1577 ....2-131
ACC_DENOM_FILTER_FREQU3
MD 1581 ....2-132
ACC_FIL_DOWNSCAN
MD 1569 ....2-131
ACC_FILTER_TIME1
MD 1571 ....2-131
ACC_FILTER_TIME2
MD 1576 ....2-131
ACC_FILTER_TYPE
MD 1570 ....2-131
ACC_HIGH_PASS_TIME
MD 1563 ....2-130
ACC_MODE
MD 1560 ....2-130
ACC_NOM_FILTER_DAMP1
MD 1575 ....2-131
ACC_NOM_FILTER_DAMP2
MD 1580 ....2-132
ACC_NOM_FILTER_DAMP3
MD 1584 ....2-132
ACC_NOM_FILTER_FREQU1
MD 1574 ....2-131
ACC_NOM_FILTER_FREQU2
MD 1579 ....2-132
ACC_NOM_FILTER_FREQU3
MD 1583 ....2-132
ACC_SENS_REF
MD 1550 ....2-130
ACC_SENS_RESOL
MD 1561 ....2-130
ACCEL_DIAGNOSIS
MD 1721 ....2-144
ACCEL_ORI:MD 21170 ....2-292
ACCEL_REDUCTION_FACTOR:MD 35230 ....2-364
ACCEL_REDUCTION_SPEED_POINT:MD 35220 ....2-364
ACCEL_REDUCTION_TYPE:MD 35242 ...2-364
ACCEL_TYPE_DRIVE:MD 35240 ....2-364
Access meas. result trigger event 1 in MCS ....3-580
Access meas. result trigger event 1 in WCS ....3-602
Access meas. result trigger event 2 in MCS ....3-580
Access meas. result trigger event 2 in WCS ....3-602
Access meas. result trigger event 3 in MCS ....3-580
Access meas. result trigger event 3 in WCS ....3-602
Access meas. result trigger event 4 in MCS ....3-580
Access meas. result trigger event 4 in WCS ....3-602
Access to data double word ....3-456
Access to meas. result 1 in MCS ....3-486
Access to meas. result 2 in MCS ....3-486
Access to meas. result 3 in MCS ....3-486
Access to meas. result 4 in MCS ....3-486
ACCESS_EXEC_CMA:MD 11161 ....2-233
ACCESS_EXEC_CST:MD 11160 ....2-233
ACCESS_EXEC_CUS:MD 11162 ....2-233
ACCESS_WRITE_CMA:MD 11166 ....2-233
ACCESS_WRITE_CST:MD 11165 ....2-233
ACCESS_WRITE_CUS:MD 11167 ....2-234
ACCESS_WRITE_MACCESS:MD 11171 ..2-234
ACCESS_WRITE_SACCESS:MD 11170 ...2-234
ACCESS_WRITE_UACCESS:MD 11172 ..2-234
accessLevel ....3-426
accIndex ....3-455
acConstCutS ....3-505, 3-508, 3-607, 3-613
acDelt ....3-520
acDtbb ....3-520
acDtbw ....3-520
acDteb ....3-520
acDtepb ....3-521
acDtepw ....3-521
acDtew ....3-521
acEsrTrigger ....3-521
acFct0 ....3-521
acFct1 ....3-521
acFct2 ....3-521
acFct3 ....3-521
acFctII ....3-521
acFctuI ....3-522
acFifoN ....3-691
acIpoBuf ....3-707
acIwStat ....3-522
acIwTu ....3-522
acJogCoord ....3-522
Ackn. by MMC for NCK-preparation command ..3-437
Acknowl. from MMC for command from NCK to MMC ....3-437
Acknowledgement counter variable ....3-531
Acknowledgement criteria for an alarm ..3-475, 3-479
Acknowledgement criteria of an alarm ....3-478
ackSafeMeasPos ....3-490, 3-584
acMarker ....3-691
acMarkerL ....3-691
acMea ....3-522
acMeasActPlane ....3-522
acMeasChbfr ....3-522
acMeasChsfr ....3-522
acMeasCornerAngle ....3-523
acMeasCornerSetangle ....3-523
acMeasDiameter ....3-523
acMeasDirApproach ....3-523
acMeasDNumber ....3-523
acMeasFineTrans ....3-523
acMeasFrameSelect ....3-523
acMeasInput ....3-523
acMeasLatch ....3-523
acMeasNcbfr ....3-524
acMeasP1Coord ....3-524
acMeasP2Coord ....3-524
acMeasP3Coord ....3-524
acMeasP4Coord ....3-524
acMeasPframe ....3-524
acMeasResults ....3-524
acMeasScaleunit ....3-524
acMeasSema ....3-524
acMeasSetCoord ....3-524
acMeasTNumber ....3-525
acMeasToolLength ....3-525
acMeasToolMask ....3-525
acMeasType ....3-525
acMeasUifr ....3-525
acMeasValid ....3-526
acMeasWpAngle ....3-526

© Siemens AG 2004 All Rights Reserved

acMeasWpSetangle ....3-526
acOvr ....3-526
acParam ....3-691
acPathn ....3-526
acPlcOvr ....3-526
acPltbb ....3-526
acPlteb ....3-526
acProg ....3-527
acPRTimeA ....3-527
acPRTimeM ....3-527
acPtpSup ....3-527
acRetpoint ....3-603
acSMode ....3-505, 3-508, 3-607, 3-613
acStat ....3-527
acSynaMem ....3-527
Act tool base position ....3-575
ACT_POS_ABS:MD 30250 ....2-342
ACT_SPEED_FILTER_TIME
MD 1522 ....2-130
MD 5522 ....2-163
actBlock ....3-551
actBlockA ....3-551
actBlockI ....3-551
actCouppPosOffset .... 3-490, 3-584
actCycleTimeBrut .... 3-694, 3-707
actCycleTimeNet .... 3-694, 3-707
actDistToGoEns ....3-603
actDLNumber ....3-527
actDNumber ....3-527
actDNumberFanuc ....3-527
actDNumberS ....3-528
actDuploNumber ....3-528
actFeedRate ....3-490, 3-584, 3-603
actFeedRateIpo ....3-528
actFrameIndex ....3-528
actGearStage ....3-505, 3-508, 3-607, 3-613
actHNumberFanuc ....3-528
acTime ....3-528
acTimec ....3-528
acTimer ....3-528
actIncrVal ....3-481, 3-575, 3-598
actIndexAxPosNo .... 3-490, 3-584
actInvocCount ....3-556
ACTION_LOG_MODE
MD 9012 ....2-169
actIpoType ....3-529
actIpoTypeS ....3-529
ACTIVATE_BRAKE_CONTROL
MD 1060 ....2-90
ACTIVATE_SEL_USER_DATA
MD 9440 ....2-183
Activation of ESR ....3-484, 3-521, 3-578
Activation of punching and nibbling functions ....3-438
Active channel machine function ....3-537
Active channel-independent basic frames ....3-458
Active channel-specific basic frames ....3-533
Active encoder .... 3-495, 3-589
Active G function ....3-568
Active G function (current language) ....3-568
Active G function (ISO Dialect) ....3-569
Active G-function for block search ....3-569
Active G-function for block search in binary .... 3-568
Active G-function of the correponding group .... 3-568
Active immediately after referencing .... 3-444, 3-451
Active INC weighting of the axis 3-481, 3-575, 3-598
Active interpolation mode .... 3-529
Active interpolation mode search run .... 3-529
Active mode .... 3-515
Active no. of the master tool holder .... 3-529
Active T-number .... 3-565
Active tool length 1 .... 3-530
Active tool length 2 .... 3-530
Active tool length 3 .... 3-531
Active tool radius .... 3-531
Active toolholder .... 3-540
Active total offset .... 3-527
Active total offset for block search .... 3-539
Active transformation .... 3-531
actLineNumber .... 3-552
actMasterToolHolderNo .... 3-529
actOriToolLength1 .... 3-529
actOriToolLength2 .... 3-529
actOriToolLength3 .... 3-529
acTotalOvr .... 3-529
actParts .... 3-530
actProgPos .... 3-598
actProgPosBKS .... 3-603
actPunchRate .... 3-570
acTrafo .... 3-530
acTrafoParSet .... 3-530
actSpeed .... 3-505, 3-508, 3-607, 3-613
actSpeedRel .... 3-490, 3-584
actTNumber .... 3-530
actTNumberLong .... 3-530
actTNumberS .... 3-530
actToolAdapterNum .... 3-530
actToolBasePos .... 3-481, 3-575, 3-598
actToolBasePosBasic .... 3-603
actToolBasePosBasicDiam .... 3-603
actToolBasePosDiam .... 3-603
actToolBasPosBN .... 3-604
actToolBasPosBNDiam .... 3-604
actToolBasPosEN .... 3-604
actToolBasPosENitc .... 3-604
actToolBasPosENjmp .... 3-604
actToolEdgeCenterPos .... 3-598
actToolEdgeCenterPosEns .... 3-604
actToolIdent .... 3-530
actToolLength1 .... 3-530
actToolLength2 .... 3-530
actToolLength3 .... 3-531
actToolRadius .... 3-531
actToolWide .... 3-634
actTransform .... 3-531
Actual gear stage of spindle .... 3-505, 3-508, 3-607, .... 3-613
Actual lead value position .... 3-485, 3-579
Actual lead value velocity .... 3-485, 3-579
Actual motor wiring .... 3-492, 3-586
Actual position difference between 2 encoders .. 3-497, .... 3-591
Actual position value in relation to WOS frame .. 3-604

© Siemens AG 2004 All Rights Reserved

Actual tool base position....3-604
Actual value assignment....3-685
Actual value encoder 1.... 3-503, 3-597
Actual value encoder 2.... 3-503, 3-597
Actual value in basic coordinate system....3-603
Actual value of axis specific feedrate....3-584
Actual value of axis-specific feedrate.... 3-490, 3-603
Actual value of position, encoder 1. .... 3-497, 3-591
Actual value of position, encoder 2 .... 3-497, 3-591
Actual value of rotary speed.....3-490, 3-584, 3-619, ....3-622
Actual value of smoothened current....3-622
Actual value of subroutine call counter.. 3-556, 3-559
Actual value of subroutine call counter.....3-562
Actual value of the axis/spindle current in A.....3-483, ....3-577
Actual value of the interpolation feedrate....3-528
Actual value of the resolution .... 3-490, 3-584
Actual value of the smoothened current ....3-619
Actual version Dpr ....3-703
ACTUAL_CURRENT
MD 1708 ....2-141
ACTUAL_CURRENT_FILTER_FREQ
MD 1250 ....2-110
ACTUAL_CYL_FORCE
MD 5708 ....2-166
ACTUAL_ELECTRIC_ROTORPOS
MD 1729 ....2-145
ACTUAL_PISTON_POSITION
MD 5741 ....2-167
ACTUAL_POSITION
MD 5740 ....2-167
ACTUAL_PRESSURE_A
MD 5704 ....2-166
ACTUAL_PRESSURE_B
MD 5705 ....2-166
ACTUAL_RAMP_TIME
MD 1723 ....2-144
ACTUAL_SPEED
MD 1707 ....2-141
MD 5707 ....2-166
ACTUAL_STALL_POWER_SPEED
MD 1148 ....2-99
ACTUAL_VALUE_CONFIG
MD 1011 ....2-85
MD 5011 ....2-154
ACTUAL_VALUE_CONFIG_DIRECT
MD 1030 ....2-88
ACTUAL_VALVE_SPOOL_POS
MD 5716 ....2-166
actualCurrent .... 3-619, 3-622
actualSpeed.... 3-619, 3-622
actValResol.... 3-490, 3-584
acVactB....3-531
acVactw....3-531
acVc....3-531
ADAPT_PATH_DYNAMIC:MD 20465 ....2-284
adaptData....3-659
Adapter data ....3-659
Adapter number....3-627
adaptNo....3-627
aDbb ....3-455
aDbd ....3-455
aDbr .... 3-455
aDbw.... 3-455
Add. correction value for path feed or axial feed3-489, .... 3-583
Add. path feed correction for synchronous actions..... .... 3-531
ADD_MOVE_ACCEL_RESERVE:MD 20610 ..... .... 2-286
Added for alignment only .... 3-605
Additional info on travel to fixed stop .....3-496, 3-590
ADISPOSA_VALUE:MD 43610.... 2-411
aDlb.... 3-456
aDld.... 3-456
aDlr .... 3-456
aDlw .... 3-456
aInco .... 3-456
Alarm number (actual alarm) .....3-476, 3-478, 3-480
ALARM_MASK_POWER_ON
MD 1600 .... 2-132
MD 5600 .... 2-164
ALARM_MASK_RESET
MD 1601 .... 2-132
MD 5601 .... 2-164
ALARM_PAR_DISPLAY_TEXT:MD 11413 2-240
ALARM_REACTION_CHAN_NOREADY
MD 11412 .... 2-240
ALARM_REACTION_POWER_ON
MD 1612 .... 2-134
MD 5612 .... 2-164
ALARM_REACTION_RESET
MD 1613 .... 2-134
MD 5613 .... 2-164
ALARM_ROTATION_CYCLE
MD 9056.... 2-171
alarmNo.....3-475, 3-477, 3-479
ALGORITHM_ROTORPOS_IDENT
MD 1075 .... 2-90
aLinkTransRate .... 3-531
All axes referenced .... 3-531
All channels of mode group in Reset .... 3-515
allAxesRefActive.... 3-531
allAxesStopped.... 3-531
ALLOW_G0_IN_G96:MD 20750 .... 2-288
amSetupState.....3-490, 3-584
analogInpVal .... 3-456
analogOutpVal.... 3-456
anAxCtAS .... 3-456
anAxCtSwA.... 3-456
anAxEsrTrigger.... 3-457
Angle of rotation alpha1 (in degrees).... 3-663
Angle of rotation alpha2 (in degrees).... 3-663
Angle of rotation for block search edge position 3-541
Angle of rotation for edge position.... 3-540
Angles of axes for toolholders .... 3-540
Angular difference between toolholder axes..... 3-540
anTimer .... 3-457
aPbbIn.... 3-457
aPbbOut .... 3-457
aPbdIn.... 3-457
aPbdOut .... 3-457
aPbrIn.... 3-457
aPbrOut .... 3-458

© Siemens AG 2004 All Rights Reserved

aPbwIn ....3-458
aPbwOut....3-458
Approach direction ....3-523
APPROACH_FEED:MD 42120....2-399
Arc center in relation to WOS frame....3-553
Arc radius in relation to WOS frame....3-553
area ....3-710
AREA_FACTOR_NEG_OUTPUT MD 5463 ....2-161
AREA_FACTOR_POS_OUTPUT MD 5462 ....2-161
ARMATURE_INDUCTANCE MD 1116 ....2-94
ARMATURE_RESISTANCE MD 1115 ....2-94
asciiMode ....3-713
ASSIGN_CHAN_TO_MODE_GROUP: MD 10010 ....2-208
ASSIGN_FEED_PER_REV_SOURCE: MD 43300 ....2-409
Assignment [axis] ....3-701
Assignment [bus] ....3-701
Assignment [client]....3-701
Assignment [master] ....3-701
Assignment [slave]....3-701
Assignment of each channel to mode group ....3-426
Associated M01 selected....3-548
ASUP_EDIT_PROTECTION_LEVEL:MD 11612 ....2-242
ASUP_EDITABLE:MD 11610 ....2-242
ASUP_START_MASK:MD 11602....2-241
ASUP_START_PRIO_LEVEL:MD 11604...2-241
aTcAckC....3-531
aTcCmdC ....3-532
aTcFct ....3-532
aTcLfn ....3-532
aTcLfo ....3-532
aTcLmyn....3-532
aTcLtn ....3-532
aTcLto ....3-532
aTcMfn ....3-532
aTcMfo ....3-532
aTcMmyn....3-532
aTcMtn ....3-532
aTcMto ....3-533
aTcStatus ....3-533
aTcThno ....3-533
aTcTno ....3-533
AUTO_GET_TYPE:MD 30552....2-344
AUTO_IPTR_LOCK:MD 22680....2-303
Automatic block division ....3-570
automCutSegment....3-570
AUXFU_ASSIGN_EXTENSION:MD 22020 ....2-298
AUXFU_ASSIGN_GROUP:MD 22000 ....2-298
AUXFU_ASSIGN_SPEC:MD 22035....2-298
AUXFU_ASSIGN_TYPE:MD 22010 ....2-298
AUXFU_ASSIGN_VALUE:MD 22030....2-298
AUXFU_ASSOC_M0_VALUE:MD 22254...2-301
AUXFU_ASSOC_M1_VALUE:MD 22256...2-301
AUXFU_D_SYNC_TYPE:MD 22250 ....2-300
AUXFU_DL_SYNC_TYPE:MD 22252 ....2-300
AUXFU_F_SYNC_TYPE:MD 22240 .... 2-300
AUXFU_GROUP_SPEC:MD 11110 .... 2-233
AUXFU_H_SYNC_TYPE:MD 22230 .... 2-300
AUXFU_H_TYPE_INT:MD 22110.... 2-299
AUXFU_M_SYNC_TYPE:MD 22200 .... 2-300
AUXFU_MAXNUM_GROUP_ASSIGN:MD 11100 .... 2-232
AUXFU_PREDEF_EXTENSION:MD 22060..... .... 2-299
AUXFU_PREDEF_GROUP:MD 22040..... 2-298
AUXFU_PREDEF_SPEC:MD 22080 .... 2-299
AUXFU_PREDEF_TYPE:MD 22050 .... 2-299
AUXFU_PREDEF_VALUE:MD 22070 .... 2-299
AUXFU_QUICK_BLOCKCHANGE:MD 22100 .... .... 2-299
AUXFU_S_SYNC_TYPE:MD 22210..... 2-300
AUXFU_T_SYNC_TYPE:MD 22220..... 2-300
Available memory DRAM file system no. 1 ..... 3-461
Available memory DRAM file system no. 2 ..... 3-460
Available memory SRAM file system..... 3-461
AX_EMERGENCY_STOP_TIME:MD 36610..... .... 2-369
AX_ESR_DELAY_TIME1:MD 37510 .... 2-392
AX_ESR_DELAY_TIME2:MD 37511 .... 2-392
AX_INERTIA:MD 32650.... 2-354
AX_JERK_DAMP:MD 32414 .... 2-351
AX_JERK_ENABLE:MD 32400.... 2-350
AX_JERK_FREQ:MD 32412.... 2-351
AX_JERK_MODE:MD 32402 .... 2-351
AX_JERK_TIME:MD 32410 .... 2-351
AX_MASS:MD 32652.... 2-355
AX_MOTION_DIR:MD 32100 .... 2-349
AX_VELO_LIMIT:MD 36200 .... 2-367
AXCHANGE_MASK:MD 10722 .... 2-229
axComp .... 3-490, 3-584
AXCONF_ASSIGN_MASTER_CHAN:MD 30550 .... 2-344
AXCONF_ASSIGN_MASTER_NCU:MD 30554 .... 2-344
AXCONF_CHANAX_NAME_TAB:MD 20080..... .... 2-273
AXCONF_GEOAX_ASSIGN_TAB:MD 20050..... .... 2-272
AXCONF_GEOAX_NAME_TAB:MD 20060 ..... .... 2-272
AXCONF_LOGIC_MACHAX_TAB:MD 10002..... .... 2-208
AXCONF_MACHAX_NAME_TAB:MD 10000..... .... 2-207
AXCONF_MACHAX_USED:MD 20070 ..... 2-273
AXCT_AXCONF_ASSIGN_TAB1:MD 12701 ..... .... 2-245
AXCT_AXCONF_ASSIGN_TAB10:MD 12710 .... .... 2-246
AXCT_AXCONF_ASSIGN_TAB11:MD 12711 .... .... 2-247
AXCT_AXCONF_ASSIGN_TAB12:MD 12712 .... .... 2-247
AXCT_AXCONF_ASSIGN_TAB13:MD 12713 .... .... 2-247

© Siemens AG 2004 All Rights Reserved

AXCT_AXCONF_ASSIGN_TAB14:MD 12714 ....2-247
AXCT_AXCONF_ASSIGN_TAB15:MD 12715 ....2-247
AXCT_AXCONF_ASSIGN_TAB16:MD 12716 ....2-247
AXCT_AXCONF_ASSIGN_TAB2:MD 12702 ....2-245
AXCT_AXCONF_ASSIGN_TAB3:MD 12703 ....2-246
AXCT_AXCONF_ASSIGN_TAB4:MD 12704 ....2-246
AXCT_AXCONF_ASSIGN_TAB5:MD 12705 ....2-246
AXCT_AXCONF_ASSIGN_TAB6:MD 12706 ....2-246
AXCT_AXCONF_ASSIGN_TAB7:MD 12707 ....2-246
AXCT_AXCONF_ASSIGN_TAB8:MD 12708 ....2-246
AXCT_AXCONF_ASSIGN_TAB9:MD 12709 ....2-246
AXCT_NAME_TAB:MD 12750 ....2-247
AXCT_SWWIDTH:MD 41700 ....2-398
Axes in exact stop ....3-531
AXES_SCALE_ENABLE:MD 22914 ....2-305
Axial acceleration overr. main run ....3-517
Axial acceleration override
run in ....3-538
Axial dist.-to-go for infeed during oscill. in WCS .3-601
Axial distance from beginning of block in the WCS ....3-601
Axial distance to the end of block in the WCS ....3-601
Axial jerk override
run in ....3-538
Axial jerk override main run ....3-518
Axial offsets of an axis .... 3-483, 3-577
Axial override for synchronous actions .. 3-487, 3-581
Axial velocity overr. main run ....3-520
Axial velocity override
run in ....3-538
Axis active .... 3-491, 3-585
Axis active flag ....3-604
Axis container rotation ....3-456
Axis distance from beginning of the block in BCS ....
.... 3-484, 3-578
Axis distance to the end of the block in the BCS ....
.... 3-484, 3-578
Axis dist-to-go of infeed during oscill. in BCS ....3-484,
....3-578
Axis exists .... 3-491, 3-585
Axis has been referenced .... 3-499, 3-593
Axis identifier of 1st rotary axis ....3-664
Axis identifier of 2nd rotary axis ....3-664
Axis info is available ....3-695
Axis is being referenced .... 3-498, 3-592
Axis name ....3-481, 3-575, 3-599
Axis name 1 ....3-666
Axis name 2 ....3-666
Axis specification ....3-502, 3-595, 3-606
Axis state .... 3-576, 3-599
Axis status ....3-482, 3-488, 3-582
Axis type ....3-503, 3-597, 3-606
Axis type according to $AA_TYP .... 3-489, 3-583
Axis types for all machine axes .... 3-426
Axis veloc. in basic coordinates .... 3-489, 3-583
Axis veloc. in machine coordinates .... 3-489, 3-583
Axis veloc. in workpiece coordinates .... 3-603
Axis velocity actual value load side in the MCS 3-504,
.... 3-597
AXIS_DIAGNOSIS:MD 36690 .... 2-369
AXIS_LANG_SUB_MASK:MD 30465 .... 2-343
AXIS_NUMBER_FOR_MONITORING:MD
31500 .... 2-347
AXIS_VAR_SERVER_SENSITIVE:MD 11398 ....
.... 2-239
axisActiveInChan ....3-491, 3-585, 3-604
axisActivInNcu .... 3-458
axisFeedRateUnit ....3-491, 3-585, 3-604
axisType .... 3-426

## B

BACKLASH:MD 32450 .... 2-352
BACKLASH_FACTOR:MD 32452 .... 2-352
badMemFfs .... 3-458
BAG_MASK:MD 11600 .... 2-241
Base position of the active tool .... 3-603
Base position of the active tool rel. to workpiece 3-604
BASE_FUNCTION_MASK:MD 30460 .... 2-343
Basic system clock cycle .... 3-683
basicLengthUnit .... 3-426
basisFrameMask ....3-458, 3-533
Baud rate on DP bus (bit/s) .... 3-696
BCS setpoint value including override components....
.... 3-601
BERO_DELAY_TIME_MINUS:MD 31123 . 2-347
BERO_DELAY_TIME_PLUS:MD 31122 .... 2-346
block .... 3-552
Block label .... 3-556
Block no. of curr. block, if syn. act. is active .... 3-564
Block no. where the syn. act. is programmed ... 3-564,
.... 3-567
Block number ....3-552, 3-556
Block overview
function blocks .... 5-789
Block search active .... 3-537
Block search waits for partner channel .... 3-541
blockLabel .... 3-556
blockNoStr ....3-552, 3-556
blockNoStrAct ....3-564, 3-567
blockNoStrProg ....3-564, 3-567
blockType .... 3-533
blockTypeInfo .... 3-534
Boot. stat. proc. f. DP Master .... 3-698
BRAKE_DELAY_TIME
MD 1063 .... 2-90
BRAKE_MODE_CHOICE:MD 36600 .... 2-369
BRAKE_RELEASE_TIME
MD 1061 .... 2-90
BREAK_CLOSE_SPEED
MD 1062 .... 2-90
Broadcast bus address of slave .... 3-699

© Siemens AG 2004 All Rights Reserved

Bus address of slave ..... 3-702
Bus configuration data are available ..... 3-697
Bus number of the slave ..... 3-699
Bytes read to the Fifo file ..... 3-714
Bytes transferred to PCMCIA card ..... 3-705
Bytes written to the Fifo file ..... 3-714
BZS setpoint value (C) incl. override components ..... 3-578
BZS setpoint value (N) incl. override components ..... 3-484

## C

Calculation resolution for angular position ..... 3-683
Calculation resolution for linear positions..... 3-683
Cart. PTP travel is supported ..... 3-527
CART_JOG_MODE:MD 42650..... 2-404
CART_JOG_SYSTEM:MD 21106 ..... 2-291
CC_ASSIGN_FASTOUT_MASK:MD 10420 ..... 2-221
CC_HW_DEBUG_MASK:MD 10430 ..... 2-222
CC_TDA_PARAM_UNIT:MD 10290..... 2-216
CC_TOA_PARAM_UNIT:MD 10292..... 2-217
CC_VDI_IN_DATA:MD 10400 ..... 2-221
CC_VDI_OUT_DATA:MD 10410 ..... 2-221
CCS_TDA_PARAM_UNIT:MD 10291 ..... 2-217
CCS_TOA_PARAM_UNIT:MD 10293 ..... 2-217
CEC_ENABLE:MD 32710..... 2-355
CEC_MAX_SUM:MD 32720 ..... 2-355
CEC_MAX_VELO:MD 32730..... 2-355
CEC_SCALING_SYSTEM_METRIC:MD 32711 ..... 2-355
CEC_TABLE_ENABLE:MD 41300 ..... 2-395
CEC_TABLE_WEIGHT:MD 41310 ..... 2-395
Center of the circle..... 3-552
Center point of a cutting edge ..... 3-598
Center point of cutting edge distance-to-go ..... 3-600
Center point of the cutting edge REPOS ..... 3-600
CENTRAL_LUBRICATION:MD 12300 ..... 2-245
Chaining 1 of the magazine to following magazine ..... 3-640
Chaining 2 of the magazine to previous magazine..... 3-640
Chaining rule..... 3-634
CHAMFER_NAME:MD 10656 ..... 2-226
CHAN_NAME:MD 20000 ..... 2-272
chanAlarm ..... 3-534
chanAssignment..... 3-426
chanAxisNoGap ..... 3-491, 3-535, 3-585
Change counter of the tool data in a channel..... 3-545
changeAxConfCounter ..... 3-535
Channel basic frame screen form ..... 3-522
Channel name..... 3-435, 3-516
Channel number of axis..... 3-491, 3-585
Channel number of spindle ..... 3-505, 3-508, 3-607, 3-613
Channel status (1=active)..... 3-535
Channel status according to $AC_STAT ..... 3-527
channelName..... 3-435
channelNo ..... 3-505, 3-508, 3-607, 3-613
Channel-specific setting for tool management.... 3-436
chanNoAxisIsActive ..... 3-491, 3-585
chanStatus..... 3-535
Characteristics of total offsets in NCK ..... 3-427
CHBFRAME_POWERON_MASK:MD 24004 ..... 2-306
CHBFRAME_RESET_MASK:MD 24002 ... 2-306
CHFRND_MAXNUM_DUMMY_BLOCKS:MD 20200 ..... 2-279
CHFRND_MODE_MASK:MD 20201 ..... 2-279
CHSFRAME_POWERON_MASK:MD 24008 ..... 2-306
CHSFRAME_RESET_CLEAR_MASK:MD 24007 ..... 2-306
CHSFRAME_RESET_MASK:MD 24006 ... 2-306
cIn..... 3-535
CIRCLE_ERROR_CONST:MD 21000..... 2-288
CIRCLE_ERROR_FACTOR:MD 21010..... 2-289
circleCenter..... 3-552
circleCenterS..... 3-552
circlePlane ..... 3-552
circlePlaneS ..... 3-552
circleRadius ..... 3-552
circleRadius for block search..... 3-553
circleRadiusS ..... 3-553
circleTurn..... 3-553
circleTurnS..... 3-553
CL1_PO_IMAGE
MD 1731 ..... 2-145
MD 5731 ..... 2-167
CL1_RES_IMAGE
MD 1732 ..... 2-146
MD 5732 ..... 2-167
cl1PoImage ..... 3-619, 3-622
cl1ResImage ..... 3-619, 3-622
CLAMP_POS_TOL:MD 36050..... 2-367
clearInfo..... 3-475, 3-478, 3-479
Client information is available ..... 3-699
Client status incl. output release ..... 3-699
CLOSED_LOOP_SYSTEM_DAMPING
MD 5180 ..... 2-157
Cmd tool base position ..... 3-575
cmdAngPos..... 3-505, 3-508, 3-607, 3-613
cmdConstCutSpeed ..... 3-506, 3-508, 3-608, 3-613
cmdContrPos ..... 3-491, 3-585
cmdCouppPosOffset ..... 3-491, 3-585
cmdDwellTime..... 3-535
cmdFeedRate..... 3-491, 3-585, 3-604
cmdFeedRateIpo ..... 3-535
cmdGearStage ..... 3-506, 3-509, 3-608, 3-614
cmdGwps..... 3-506, 3-509, 3-608, 3-614
cmdInvocCount..... 3-556
cmdProgPos..... 3-599
cmdSpeed..... 3-506, 3-509, 3-608, 3-614
cmdSpeedRel..... 3-491, 3-585
cmdToolBasePos..... 3-481, 3-575, 3-599
cmdToolEdgeCenterCircleCenterEns..... 3-553
cmdToolEdgeCenterCircleCenterEnsS..... 3-553
cmdToolEdgeCenterCircleRadiusEns ..... 3-553
cmdToolEdgeCenterCircleRadiusEnsS ..... 3-553
cmdToolEdgeCenterPos..... 3-599
cmdToolEdgeCenterPosEnsS ..... 3-605
cmdTrafoParSetS ..... 3-535

© Siemens AG 2004 All Rights Reserved

cmdTrafoS .....3-535
CMM_CIRCLE_RAPID_FEED
MD 9724 .....2-197
CMM_COUNT_GEAR_STEPS
MD 9662 .....2-193
CMM_CUSTOMER_START_PICTURE
MD 9675 .....2-195
CMM_CYC_BGF_BORE_DIST
MD 9682 .....2-195
CMM_CYC_DRILL_RELEASE_ANGLE
MD 9659 .....2-193
CMM_CYC_DRILL_RELEASE_DIST
MD 9656 .....2-192
CMM_CYC_MAX_CONT_PO_TO_RAD
MD 9658 .....2-192
CMM_CYC_MIN_CONT_PO_TO_RAD
MD 9657 .....2-192
CMM_CYC_PECKING_DIST
MD 9655 .....2-192
CMM_DIRECTORY_SOFTKEY_PATH1
MD 9676 .....2-195
CMM_DIRECTORY_SOFTKEY_PATH2
MD 9677 .....2-195
CMM_DIRECTORY_SOFTKEY_PATH3
MD 9678 .....2-195
CMM_DIRECTORY_SOFTKEY_PATH4
MD 9679 .....2-195
CMM_DISPL_DIR_A_B_AXIS_INV
MD 9728 .....2-197
CMM_DISPLAY_MD_IS_METRIC
MD 9726 .....2-197
CMM_ENABLE_A_AXIS
MD 9653 .....2-192
CMM_ENABLE_B_AXIS
MD 9720 .....2-197
CMM_ENABLE_CUSTOMER_M_CODES
MD 9661 .....2-193
CMM_ENABLE_MEAS_T_AUTO
MD 9749 .....2-198
CMM_ENABLE_PLANE_CHANGE
MD 9660 .....2-193
CMM_ENABLE_POS_A_B_AXIS
MD 9727 .....2-197
CMM_ENABLE_QUICK_M_CODES
MD 9725 .....2-197
CMM_ENABLE_SWIVELLING_HEAD
MD 9723 .....2-197
CMM_ENABLE_TIME_DISPLAY
MD 9777 .....2-200
CMM_ENABLE_TOOL_MAGAZINE
MD 9674 .....2-194
CMM_ENABLE_TRACYL
MD 9721 .....2-197
CMM_FACE_MILL_EFF_TOOL_DIAM
MD 9669 .....2-194
CMM_FEED_FACTOR_1_ROT_SP
MD 9769 .....2-199
CMM_FEED_FACTOR_2_ROT_SP
MD 9770 .....2-200
CMM_FEED_WITH_COLL_CTRL
MD 9757 .....2-198
CMM_FIXED_TOOL_PLACE
MD 9672 ..... 2-194
CMM_FOLLOW_ON_TOOL_ACTIVE
MD 9667 ..... 2-194
CMM_G_CODE_TOOL_CHANGE_PROG
MD 9729 ..... 2-197
CMM_GEOAX_ASSIGN_AXIS_4
MD 9706 ..... 2-196
CMM_GEOAX_ASSIGN_AXIS_5
MD 9707 ..... 2-196
CMM_INDEX_AXIS_4
MD 9703 ..... 2-196
CMM_INDEX_AXIS_5
MD 9704 ..... 2-196
CMM_INDEX_SPINDLE
MD 9705 ..... 2-196
CMM_M_CODE_COOLANT_I
MD 9680 ..... 2-195
CMM_M_CODE_COOLANT_I_AND_II
MD 9668 ..... 2-194
CMM_M_CODE_COOLANT_II
MD 9681 ..... 2-195
CMM_M_CODE_COOLANT_OFF
MD 9686 ..... 2-196
CMM_M_CODE_TOOL_BITS_1
MD 9684 ..... 2-195
CMM_M_CODE_TOOL_BITS_2
MD 9685 ..... 2-196
CMM_MAX_CIRC_SPEED_ROT_SP
MD 9759 ..... 2-199
CMM_MAX_FEED_ROT_SP
MD 9771 ..... 2-200
CMM_MAX_INP_FEED_P_MIN
MD 9664 ..... 2-193
CMM_MAX_INP_FEED_P_ROT
MD 9665 ..... 2-193
CMM_MAX_INP_FEED_P_TOOTH
MD 9666 ..... 2-193
CMM_MAX_SPIND_SPEED_ROT_SP
MD 9760 ..... 2-199
CMM_MEAS_DIST_MAN
MD 9753 ..... 2-198
CMM_MEAS_DIST_TOOL_LENGTH
MD 9754 ..... 2-198
CMM_MEAS_DIST_TOOL_RADIUS
MD 9755 ..... 2-198
CMM_MEAS_PROBE_INPUT
MD 9750 ..... 2-198
CMM_MEAS_SETTINGS
MD 9776 ..... 2-200
CMM_MEAS_T_PROBE_INPUT
MD 9751 ..... 2-198
CMM_MEAS_TOL_ROT_SP
MD 9762 ..... 2-199
CMM_MEASURING_DISTANCE
MD 9752 ..... 2-198
CMM_MEASURING_FEED
MD 9756 ..... 2-198
CMM_MIN_FEED_ROT_SP
MD 9761 ..... 2-199
CMM_MKS_POSITION_MAN_MEAS

© Siemens AG 2004 All Rights Reserved

MD 9748 ....2-197
CMM_OEM_FUNCTION_MASK_1
MD 9690 ....2-196
CMM_OEM_FUNCTION_MASK_2
MD 9691 ....2-196
CMM_OPTION_MASK
MD 9719 ....2-196
CMM_OPTION_MASK_2
MD 9718 ....2-196
CMM_POS_COORDINATE_SYSTEM
MD 9650 ....2-192
CMM_POS_FEED_WITH_COLL_CTRL
MD 9758 ....2-198
CMM_SPEED_FIELD_DISPLAY_RES
MD 9654 ....2-192
CMM_START_RAD_CONTOUR_POCKE
MD 9670 ....2-194
CMM_T_PROBE_APPROACH_DIR
MD 9768 ....2-199
CMM_T_PROBE_DIAM_LENGTH_MEA
MD 9765 ....2-199
CMM_T_PROBE_DIAM_RAD_MEAS
MD 9766 ....2-199
CMM_T_PROBE_DIST_RAD_MEAS
MD 9767 ....2-199
CMM_T_PROBE_MANUFACTURER
MD 9774 ....2-200
CMM_T_PROBE_MEASURING_DIST
MD 9772 ....2-200
CMM_T_PROBE_MEASURING_FEED
MD 9773 ....2-200
CMM_T_PROBE_OFFSET
MD 9775 ....2-200
CMM_TOOL_DISPLAY_IN_DIAM
MD 9663 ....2-193
CMM_TOOL_LIFE_CONTROL
MD 9652 ....2-192
CMM_TOOL_LOAD_DEFAULT_MAG
MD 9671 ....2-194
CMM_TOOL_LOAD_STATION
MD 9673 ....2-194
CMM_TOOL_MANAGEMENT
MD 9651 ....2-192
CMM_TOOL_MOVE_DEFAULT_MAG
MD 9687 ....2-196
CMM_TOOL_PROBE_ALLOW_AXIS
MD 9764 ....2-199
CMM_TOOL_PROBE_TYPE
MD 9763 ....2-199
CNC system language ....3-427
Code number of the active transformation ....3-530
col....3-710
COLLECT_TOOL_CHANGE:MD 20128 ....2-277
COM_CONFIGURATION:MD 10161....2-215
COM_IPO_TIME_RATIO:MD 10072 ....2-210
Command counter variable....3-532
Command for magazine execution ..... 3-636, 3-639
Command from NCK to MMC ....3-436
Command from NCK-preparation to the MMC....3-437
Command number....3-532
Command parameter 1 of the magazine ....3-639
Command parameter 2 of the magazine.... 3-639
Command state of the magazine .... 3-636
Command status.... 3-533
Command status of the magazine.... 3-639
Command word SPL-KDV .... 3-470
COMMUTATION_ANGLE_OFFSET
MD 1016 .... 2-86
COMP_ADD_VELO_FACTOR:MD 32760. 2-355
COMPAR_ASSIGN_ANA_INPUT_1:MD 10530
.... 2-223
COMPAR_ASSIGN_ANA_INPUT_2:MD 10531
.... 2-223
COMPAR_THRESHOLD_1:MD 41600..... 2-398
COMPAR_THRESHOLD_2:MD 41601..... 2-398
COMPAR_TYPE_1:MD 10540.... 2-223
COMPAR_TYPE_2:MD 10541.... 2-223
Compensation parameters for SUG .... 3-635
Compensation value upper limit $AA_OFF with clear
.... 3-688
Comperator input NC .... 3-456
completeDocAcxChangeCnt .... 3-459
completeDotAcxChangeCnt.... 3-459
completeDpcAcxChangeCnt .... 3-459
COMPRESS_BLOCK_PATH_LIMIT:MD 20170
.... 2-278
COMPRESS_CONTUR_TOL:MD 42475... 2-402
COMPRESS_ORI_ROT_TOL:MD 42477 .. 2-402
COMPRESS_ORI_TOL:MD 42476..... 2-402
COMPRESS_POS_TOL:MD 33100 ..... 2-357
COMPRESS_VELO_TOL:MD 20172 ..... 2-278
compressAbility .... 3-694
Compressed data transfer.... 3-694
COMPRESSOR_MODE:MD 20482..... 2-285
COMPRESSOR_PERFORMANCE:MD 20484 ...
.... 2-285
Configurable messages .....3-494, 3-588
Confirmation of SI actual position .....3-490, 3-584
conntectPar.... 3-634
CONST_VELO_MIN_TIME:MD 20500 ..... 2-285
Constant cutting speed of the master spindle... 3-506,
....3-508, 3-608, 3-613
Container actual address .... 3-456
Contour deviation....3-503, 3-596
Contour type of 10th contour element....3-445, 3-452
Contour type of 1st contour element .....3-444, 3-451
Contour type of 2nd contour element ....3-444, 3-451
Contour type of 3rd contour element .....3-444, 3-451
Contour type of 4th contour element .....3-444, 3-452
Contour type of 5th contour element .....3-445, 3-452
Contour type of 6th contour element .....3-445, 3-452
Contour type of 7th contour element .....3-445, 3-452
Contour type of 8th contour element .....3-445, 3-452
Contour type of 9th contour element .....3-445, 3-452
CONTOUR_ASSIGN_FASTOUT:MD 21070.....
.... 2-289
CONTOUR_DEF_ANGLE_NAME:MD 10652 .....
.... 2-226
CONTOUR_END_TEXT
MD 9461.... 2-184
CONTOUR_TOL:MD 36400.... 2-368

© Siemens AG 2004 All Rights Reserved

CONTOUR_TUNNEL_REACTION:MD 21060 .... ....2-289
CONTOUR_TUNNEL_TOL:MD 21050.....2-289
CONTOURHANDWH_IMP_PER_LATCH:MD 11322.....2-236
CONTPREC:MD 42450.....2-401
contrConfirmActive ..... 3-491, 3-585
contrMode..... 3-492, 3-586
Control mode of drive..... 3-492, 3-586
CONTROLLED_SYSTEM_GAIN
MD 5435 .....2-161
Controller enable ..... 3-491, 3-585
Controller mode servo..... 3-492, 3-586
CONTROLLER_DISABLE_TIME
MD 1064 .....2-90
CONVERT_SCALING_SYSTEM:MD 10260..... ....2-216
Coordinate system.....3-716
Coordinate system manual travel .....3-522
Coordinate system of the 1st measuring point....3-524
Coordinate system of the 2nd measuring point ..3-524
Coordinate system of the 3rd measuring point ...3-524
Coordinate system of the 4th measuring point ...3-524
Coordinate system of the set point.....3-524
Corner cutting angle.....3-523
CORNER_SLOWDOWN_CRIT:MD 42526 2-404
CORNER_SLOWDOWN_END:MD 42522 .2-403
CORNER_SLOWDOWN_OVR:MD 42524 .2-404
CORNER_SLOWDOWN_START:MD 42520..... ....2-403
corr. to actTNumber for block search without calc. ..... ....3-530
Corr. to circleCenter for block search with calc...3-552
CORR_VELO:MD 32070 .....2-348
corrBlActive.....3-535
Corresp. to actNumber for block search with calc. ..... ....3-528
corresponds to $$actToolBasPosEN Mode=0....3-604
corresponds to $$actToolBasPosEN Mode=1....3-604
Corresponds to circleCenterWos .....3-553
Corresponds to circleRadiusWos.....3-553
countActivated.....3-714
Counter for motion synchronous actions 32 bit...3-691
Counter for NC-start key.....3-537
Counter for rejected NC starts.....3-542
Counter incremented with each call of EXTCALL ..... ....3-461
Counter indicating changes of axes configuration..... ....3-535
Counter indicating that a new LUD ACC is available.... ....3-537
COUPLE_AXIS_1:MD 21300.....2-294
COUPLE_BLOCK_CHANGE_CTRL_1:MD 21320.....2-294
COUPLE_IS_WRITE_PROT_1:MD 21340 2-295
COUPLE_POS_TOL_COARSE:MD 372002-389
COUPLE_POS_TOL_FINE:MD 37210.....2-389
COUPLE_RATIO_1:MD 42300.....2-400
COUPLE_RESET_MODE_1:MD 21330.....2-295
COUPLE_VELO_TOL_COARSE:MD 37220..... ....2-389
COUPLE_VELO_TOL_FINE:MD 37230.....2-389
COUPLING_MODE_1:MD 21310 ..... 2-294
cOut ..... 3-536
CPREC_WITH_FFW:MD 20470 ..... 2-285
CRC diagnostic parameter ..... 3-622
CRC errors on the drive bus..... 3-494, 3-588
CRC_DIAGNOSIS
MD 1720 ..... 2-143
MD 5720 ..... 2-166
crcErrorCount ..... 3-619, 3-622
CRC-parameter for diagnosis ..... 3-619
CRIT_SPLINE_ANGLE:MD 42470 ..... 2-401
CTAB_DEFAULT_MEMORY_TYPE:MD 20905 ..... 2-288
CTAB_ENABLE_NO_LEADMOTION:MD 20900 ..... 2-288
CTM_ANGLE_REFERENCE_AXIS
MD 9632..... 2-190
CTM_CIRC_TAP_DWELL_TIME_1
MD 9644..... 2-191
CTM_CIRC_TAP_DWELL_TIME_2
MD 9645..... 2-191
CTM_COUNT_GEAR_STEPS
MD 9627..... 2-189
CTM_CROSS_AX_DIAMETER_ON
MD 9611..... 2-188
CTM_CUSTOMER_START_PICTURE
MD 9625..... 2-189
CTM_CYC_ROUGH_BLANC_OFFS
MD 9552..... 2-185
CTM_CYC_ROUGH_FEED_INT_TIME
MD 9557..... 2-186
CTM_CYC_ROUGH_INT_REL_DIST
MD 9558..... 2-186
CTM_CYC_ROUGH_MIN_REST_MAT1
MD 9554..... 2-186
CTM_CYC_ROUGH_MIN_REST_MAT2
MD 9555..... 2-186
CTM_CYC_ROUGH_RELEASE_ANGLE
MD 9551..... 2-185
CTM_CYC_ROUGH_RELEASE_DIST
MD 9550..... 2-185
CTM_CYC_ROUGH_TRACE_ANGLE
MD 9553..... 2-186
CTM_CYC_ROUGH_VAR_DEPTH
MD 9556..... 2-186
CTM_CYCLE_DWELL_TIME
MD 9621..... 2-189
CTM_CYCLE_DWELL_TIME_SEC
MD 9631..... 2-190
CTM_CYCLE_SAFETY_CLEARANCE
MD 9620..... 2-188
CTM_ENABLE_C_AXIS
MD 9618..... 2-188
CTM_ENABLE_CALC_THREAD_PITC
MD 9640..... 2-190
CTM_ENABLE_CIRCLE_HOLE_CYCL
MD 9642..... 2-191
CTM_ENABLE_DRIVEN_TOOL
MD 9643..... 2-191
CTM_ENABLE_FEED_P_MIN
MD 9608..... 2-187

© Siemens AG 2004 All Rights Reserved

CTM_ENABLE_G_CODE_INPUT
MD 9641 ....2-191
CTM_ENABLE_RAPID_FEED
MD 9607 ....2-187
CTM_ENABLE_REFPOINT
MD 9622 ....2-189
CTM_ENABLE_S_TOOL_TABLE
MD 9636 ....2-190
CTM_FACTOR_I_CALC_THR_PITCH
MD 9647 ....2-191
CTM_FACTOR_O_CALC_THR_PITCH
MD 9646 ....2-191
CTM_FIN_FEED_PERCENT
MD 9630 ....2-190
CTM_G91_DIAMETER_ON
MD 9619 ....2-188
CTM_INC_DEC_FEED_PER_MIN
MD 9633 ....2-190
CTM_INC_DEC_FEED_PER_ROT
MD 9634 ....2-190
CTM_MAX_INP_FEED_P_MIN
MD 9637 ....2-190
CTM_MAX_INP_FEED_P_ROT
MD 9638 ....2-190
CTM_MAX_TOOL_WEAR
MD 9639 ....2-190
CTM_MODE_SELECT_BY_SOFTKEY
MD 9624 ....2-189
CTM_OPTION_MASK
MD 9599 ....2-186
CTM_POS_COORDINATE_SYSTEM
MD 9610 ....2-187
CTM_ROUGH_I_RELEASE_DIST
MD 9649 ....2-191
CTM_ROUGH_O_RELEASE_DIST
MD 9648 ....2-191
CTM_SIMULATION_DEF_VIS_AREA
MD 9602 ....2-187
CTM_SIMULATION_DEF_X
MD 9600 ....2-186
CTM_SIMULATION_DEF_Y
MD 9601 ....2-186
CTM_SIMULATION_MAX_VIS_AREA
MD 9605 ....2-187
CTM_SIMULATION_MAX_X
MD 9603 ....2-187
CTM_SIMULATION_MAX_Y
MD 9604 ....2-187
CTM_SIMULATION_TIME_NEW_POS
MD 9606 ....2-187
CTM_SPEED_FIELD_DISPLAY_RES
MD 9609 ....2-187
CTM_START_WITHOUT_REFPOINT
MD 9623 ....2-189
CTM_TEACH_HANDW_FEED
MD 9615 ....2-188
CTM_TEACH_HANDW_FEED_P_MIN
MD 9616 ....2-188
CTM_TEACH_HANDW_FEED_P_REV
MD 9617 ....2-188
CTM_TEACH_STORE_MANUAL_ABS
MD 9612 .... 2-188
CTM_TEACH_STORE_MANUAL_AUTO
MD 9614 .... 2-188
CTM_TEACH_STORE_START_ABS
MD 9613 .... 2-188
CTM_TOOL_INPUT_DIAM_ON
MD 9628 .... 2-189
CTM_TRACE
MD 9626 .... 2-189
CTM_TURN_GROOV_FREE_CUT_VAL
MD 9561 .... 2-186
CTM_TURN_GROOV_TOOL_BEND
MD 9560 .... 2-186
CTM_WEAR_INPUT_DIAM_ON
MD 9629 .... 2-189
CTRL_CONFIG
MD 1004 .... 2-84
MD 5004 .... 2-154
CTRLOUT_DELAY
MD 1101 .... 2-91
CTRLOUT_LEAD_TIME:MD 10082 .... 2-211
CTRLOUT_LEAD_TIME_MAX:MD 10083 .... 2-211
CTRLOUT_LIMIT:MD 36210 .... 2-368
CTRLOUT_LIMIT_TIME:MD 36220 .... 2-368
CTRLOUT_MODULE_NR:MD 30110 .... 2-340
CTRLOUT_NR:MD 30120 .... 2-340
CTRLOUT_SEGMENT_NR:MD 30100 .... 2-340
CTRLOUT_TYPE:MD 30130 .... 2-340
CUBIC_SPLINE_BLOCKS:MD 20160 .... 2-278
Cumulative value of superimposition in the tool di.... 3-603
Curr. safety actual value difference NCK - drive 3-500, 3-594
Curr. safety speed difference NCK - drive .... 3-500, 3-594
Curr. stat. of DP M bus - DP M contr. .... 3-698
CURRCTRL_ADAPT_CURRENT_1
MD 1180 .... 2-101
CURRCTRL_ADAPT_CURRENT_2
MD 1181 .... 2-101
CURRCTRL_ADAPT_ENABLE
MD 1183 .... 2-101
CURRCTRL_CYCLE_TIME
MD 1000 .... 2-83
CURRCTRL_GAIN
MD 1120 .... 2-95
CURRCTRL_INTEGRATOR_TIME
MD 1121 .... 2-95
CURRCTRL_REF_MODEL_DELAY
MD 1124 .... 2-95
Current access time to bus .... 3-697
Current application .... 3-716
Current block (DISPLOF active) .... 3-551
Current block (DISPLOF inactive) .... 3-551
Current channel .... 3-716
Current const. cutting rate .... 3-505, 3-508, 3-607, 3-613
Current coupling state of the slave spindle .... 3-483, 3-577
Current gross cycle time .... 3-707
Current indexing position .... 3-483, 3-577
Current indexing position number .... 3-490, 3-584

© Siemens AG 2004 All Rights Reserved

Current interpreter block ..... 3-551
Current lead ..... 3-544
Current lead during search run ..... 3-544
Current location ..... 3-628, 3-647
Current magazine ..... 3-628, 3-647
Current magazine position ..... 3-639
Current master value ..... 3-485, 3-579
Current module name for step editor ..... 3-554
Current net cycle time ..... 3-707
Current operating mode MMC ..... 3-716
Current physical unit ..... 3-481
Current physical unit of axis ..... 3-599
Current physical unit of the axis position ..... 3-575
Current position of channel axes ..... 3-522
Current position of machine ..... 3-522
Current reverse position 1 for oscill. in the BCS 3-487, ..... 3-581
Current reverse position 2 for oscill. in the BCS 3-487, ..... 3-581
Current speed limitation for spindle ..... 3-507, 3-509, ..... 3-609, 3-615
Current state reached during the boot process ..... 3-494, ..... 3-588
Current status of the master-slave coupling ..... 3-486, ..... 3-580
Current stroke number ..... 3-571
Current tool holder data ..... 3-546
Current width of the grinding wheel ..... 3-634
CURRENT_FILTER_1_BANDWIDTH
MD 1211 ..... 2-104
CURRENT_FILTER_1_BS_FREQ
MD 1222 ..... 2-107
CURRENT_FILTER_1_BW_NUM
MD 1212 ..... 2-105
CURRENT_FILTER_1_DAMPING
MD 1203 ..... 2-103
CURRENT_FILTER_1_FREQUENCY
MD 1202 ..... 2-103
CURRENT_FILTER_1_SUPPR_FREQ
MD 1210 ..... 2-104
CURRENT_FILTER_2_BANDWIDTH
MD 1214 ..... 2-105
CURRENT_FILTER_2_BS_FREQ
MD 1223 ..... 2-107
CURRENT_FILTER_2_BW_NUM
MD 1215 ..... 2-105
CURRENT_FILTER_2_DAMPING
MD 1205 ..... 2-103
CURRENT_FILTER_2_FREQUENCY
MD 1204 ..... 2-103
CURRENT_FILTER_2_SUPPR_FREQ
MD 1213 ..... 2-105
CURRENT_FILTER_3_BANDWIDTH
MD 1217 ..... 2-106
CURRENT_FILTER_3_BS_FREQ
MD 1224 ..... 2-107
CURRENT_FILTER_3_BW_NUM
MD 1218 ..... 2-106
CURRENT_FILTER_3_DAMPING
MD 1207 ..... 2-104
CURRENT_FILTER_3_FREQUENCY
MD 1206 ..... 2-104
CURRENT_FILTER_3_SUPPR_FREQ
MD 1216 ..... 2-106
CURRENT_FILTER_4_BANDWIDTH
MD 1220 ..... 2-106
CURRENT_FILTER_4_BS_FREQ
MD 1225 ..... 2-107
CURRENT_FILTER_4_BW_NUM
MD 1221 ..... 2-107
CURRENT_FILTER_4_DAMPING
MD 1209 ..... 2-104
CURRENT_FILTER_4_FREQUENCY
MD 1208 ..... 2-104
CURRENT_FILTER_4_SUPPR_FREQ
MD 1219 ..... 2-106
CURRENT_FILTER_CONFIG
MD 1201 ..... 2-103
CURRENT_LIMIT
MD 1238 ..... 2-109
CURRENT_LSB
MD 1710 ..... 2-142
CURRENT_MONITOR_FILTER_TIME
MD 1254 ..... 2-111
CURRENT_ROTORPOS_IDENT
MD 1019 ..... 2-86
CURRENT_SMOOTH_HYSTERESIS
MD 1246 ..... 2-110
CURRENT_SMOOTH_SPEED
MD 1245 ..... 2-110
CURV_EFFECT_ON_PATH_ACCEL:MD 20602 ..... 2-286
CURV_EFFECT_ON_PATH_JERK:MD 20603 ... ..... 2-286
CUTCOM_ACT_DEACT_CTRL:MD 424942-402
CUTCOM_CLSD_CONT:MD 42496 ..... 2-403
CUTCOM_CORNER_LIMIT:MD 20210 ..... 2-280
CUTCOM_CURVE_INSERT_LIMIT:MD 20230... ..... 2-280
CUTCOM_DECEL_LIMIT:MD 42528 ..... 2-404
CUTCOM_G40_STOPRE:MD 42490 ..... 2-402
CUTCOM_INTERS_POLY_ENABLE:MD 20256 ..... 2-281
CUTCOM_MAX_DISC:MD 20220 ..... 2-280
CUTCOM_MAXNUM_CHECK_BLOCKS:MD 20240 ..... 2-280
CUTCOM_MAXNUM_DUMMY_BLOCKS:MD 20250 ..... 2-280
CUTCOM_MAXNUM_SUPPR_BLOCKS:MD 20252 ..... 2-280
CUTCOM_PARALLEL_ORI_LIMIT:MD 21080.... ..... 2-290
CUTCOM_PLANE_ORI_LIMIT:MD 21082 2-290
CUTCOM_PLANE_PATH_LIMIT:MD 21084 ..... ..... 2-290
CUTDIRMOD:MD 42984 ..... 2-407
cuttEdgeNo ..... 3-661
cuttEdgeParam ..... 3-625, 3-677
CUTTING_EDGE_DEFAULT:MD 20270 ... 2-281
CUTTING_EDGE_RESET_VALUE:MD 20130 ... ..... 2-277
cuttingTime ..... 3-707
Cycles between bus access errors type 1 ..... 3-697
Cycles between bus access errors type 2 ..... 3-697
cycleTime ..... 3-708
cycServRestricted ..... 3-536

© Siemens AG 2004 All Rights Reserved

CYLINDER_A_ORIENTATION
MD 5151 ....2-157
CYLINDER_DEAD_VOLUME_A
MD 5135 ....2-156
CYLINDER_DEAD_VOLUME_B
MD 5136 ....2-156
CYLINDER_FASTENING
MD 5152 ....2-157
CYLINDER_PISTON_DIAMETER
MD 5131 ....2-156
CYLINDER_SAFETY_CONFIG
MD 5530 ....2-163

## D

Dadr ....3-564
DARKTIME_TO_PLC
MD 9015 ....2-170
data .... 3-631, 3-632
Data byte from/to the PLC ....3-455
Data byte in link area ....3-456
Data double word (32 bits) from/to the PLC ....3-455
Data exchange time in [s,s,userdef] ....3-696
Data for measurement....3-523
Data logging format....3-713
Data version .... 3-621, 3-623
Data word (16 bits) from/to the PLC....3-455
Data word in link area ....3-456
dataListIndex....3-714
dataProtok ....3-714
dataUploaded....3-714
DC-link voltage ....3-623
DEFAULT_FEED:MD 42110....2-399
DEFAULT_ROT_FACTOR_R:MD 42150...2-399
DEFAULT_SCALE_FACTOR_AXIS:MD 43120
....2-408
DEFAULT_SCALE_FACTOR_P:MD 42140.....
....2-399
DEFAULT_VALUES_MEM_MASK:MD 11270....
....2-235
DELAY_ROTORPOS_IDENT
MD 1029 ....2-88
delayFSt ....3-536
DEPTH_OF_LOGFILE_OPT:MD 17600 ....2-254
Des. status of DP M bus - HOST req. ....3-698
DES_CURRENT_OPEN_LOOP_AM
MD 1458 ....2-126
DES_VELO_LIMIT:MD 36520 ....2-369
Desired parameter set of the drive..... 3-493, 3-587
Desired torque value in Nm..... 3-488, 3-582
Desired value of axis-specific feedrate ....3-604
Desired value of axis-specific feedrate, ....3-585
Desired value of position after fine interpolation 3-491,
.... 3-585
Desired value of rotary speed ....3-620
Desired value of rotary speed....3-585
Desired value of the interpolation feedrate.....3-535
DESIRED_CYL_FORCE
MD 5717 ....2-166
DESIRED_SPEED
MD 1706 ....2-141
MD 5706 .... 2-166
DESIRED_TORQUE
MD 1728 .... 2-145
DESIRED_VALVE_SPOOL_POS
MD 5715 .... 2-166
DESIRED_VOLTAGE
MD 1705 .... 2-141
desiredSpeed .... 3-620, 3-622
DIAG_ROTORPOS_IDENT
MD 1734 .... 2-146
diagnoseDataFfs.... 3-459
DIAGNOSIS_ACTIVATION_FLAGS
MD 1610 .... 2-134
MD 5610 .... 2-164
DIAGNOSIS_CONTROL_FLAGS
MD 1650 .... 2-137
MD 5650 .... 2-165
DIAGNOSIS_I2T
MD 1262 .... 2-111
Diameter .... 3-523
DIAMETER_AX_DEF:MD 20100 .... 2-274
diamonInfo .... 3-605
DIFF_ROTORPOS_IDENT
MD 1737 .... 2-147
Difference value main run to run in of $AA_TOFF[ ]....
.... 3-603
Digital drive type .... 3-460
digitInpVal .... 3-459
digitOutpVal .... 3-460
Dimension of the magazine.... 3-639
DIR_VECTOR_NAME_TAB:MD 10640 .... 2-225
Direct encoder used .... 3-620
direction .... 3-536
DISABLE_PLC_START:MD 22622.... 2-303
Display of active alarms.... 3-483, 3-577
Display of active axis.... 3-458
Display of existing axes. .... 3-535
Display state for block display .... 3-557
Display traversing blocks .... 3-548
DISPLAY_AXIS:MD 20098 .... 2-274
DISPLAY_BACKLIGHT
MD 9025.... 2-170
DISPLAY_BLACK_TIME
MD 9006.... 2-169
DISPLAY_FUNCTION_MASK:MD 10284.. 2-216
DISPLAY_IS_MODULO:MD 30320 .... 2-342
DISPLAY_MODE
MD 9002.... 2-168
DISPLAY_MODE_POSITION:MD 10136 .. 2-214
DISPLAY_RESOLUTION
MD 9004.... 2-169
DISPLAY_RESOLUTION_INCH
MD 9011.... 2-169
DISPLAY_TYPE
MD 9001.... 2-168
displayAxis ....3-492, 3-586, 3-605
displayState .... 3-557
Dist.-to-go of infeed during oscill. in the WCS ... 3-521
Distance from beginning of the block in the BCS 3-520
Distance from the beginning of block in the WCS .....
.... 3-520
Distance per revolution .... 3-492, 3-586

© Siemens AG 2004 All Rights Reserved

Distance to change position ..... 3-644
Distance to the end of the block in the BCS ..... 3-520
Distance to the end of the block in the WCS ..... 3-521
Distance-to-go in the SZS ..... 3-603
Distance-to-go of infeed during oscill. in the BCS ..... 3-521
distPerDriveRevol ..... 3-492, 3-586
Disturbing torque/max. torque (motor end) ..... 3-503, 3-597
DIVISION_LIN_SCALE
MD 1024 ..... 2-87
MD 5024 ..... 2-154
DIVISION_LIN_SCALE_DM
MD 1034 ..... 2-89
DNDT_THRESHOLD
MD 1611 ..... 2-134
DNo ..... 3-661
D-number ..... 3-564, 3-661
Double value of the auxiliary function ..... 3-574
DP cycle time in [s,s,userdef] ..... 3-696
DP system configuration data are valid ..... 3-703
dp611USpecAccChangeCnt ..... 3-694
dp611USpecAccKey ..... 3-695
dp611USpecAccMask ..... 3-695
dp611USpecAccPath ..... 3-695
DPA/DPM available ..... 3-703
dpAxisCfgMachAxisNr ..... 3-695
dpAxisCfgNumAxes ..... 3-695
dpAxisCfgValid ..... 3-695
dpAxisStateCtrlout ..... 3-695
dpAxisStateEnc1 ..... 3-695
dpAxisStateEnc2 ..... 3-696
dpAxisStateLifeCntErrCtrlout ..... 3-696
dpAxisStateLifeCntErrEnc1 ..... 3-696
dpAxisStateLifeCntErrEnc2 ..... 3-696
dpBusCfgBaudrate ..... 3-696
dpBusCfgCycleTime ..... 3-696
dpBusCfgDataExTime ..... 3-696
dpBusCfgNumBuses ..... 3-696
dpBusCfgValid ..... 3-697
dpBusStateAccessDurationAct ..... 3-697
dpBusStateAccessDurationMax ..... 3-697
dpBusStateAccessDurationMin ..... 3-697
dpBusStateAccessErrCnt1 ..... 3-697
dpBusStateAccessErrCnt2 ..... 3-697
dpBusStateAvgCycleBetweenErr1 ..... 3-697
dpBusStateAvgCycleBetweenErr2 ..... 3-697
dpBusStateCycleCnt ..... 3-697
dpBusStateDpmAction ..... 3-697
dpBusStateDpmActual ..... 3-698
dpBusStateDpmCtrl ..... 3-698
dpBusStateDpmError ..... 3-698
dpBusStateDpmPrjCnt ..... 3-698
dpBusStateDpmRequest ..... 3-698
dpBusStateNumActiveSlaves ..... 3-698
dpClientCfgId ..... 3-698
dpClientCfgNumClnt ..... 3-698
dpClientCfgValid ..... 3-699
dpClientStateComm ..... 3-699
dpSlaveCfgAssignBus ..... 3-699
dpSlaveCfgBusAddr ..... 3-699
dpSlaveCfgInputTime ..... 3-699
dpSlaveCfgMasterAppCycTime ..... 3-699
dpSlaveCfgNumSlaves ..... 3-699
dpSlaveCfgOutputTime ..... 3-700
dpSlaveCfgValid ..... 3-700
dpSlaveIdentNo ..... 3-700
dpSlaveIdentNoEx ..... 3-700
dpSlaveStateComm ..... 3-700
dpSlaveStateIncCnt ..... 3-700
dpSlaveStateSync ..... 3-701
dpSlotCfgAssignAxis ..... 3-701
dpSlotCfgAssignBus ..... 3-701
dpSlotCfgAssignClient ..... 3-701
dpSlotCfgAssignMaster ..... 3-701
dpSlotCfgAssignSlave ..... 3-701
dpSlotCfgIoType ..... 3-701
dpSlotCfgLength ..... 3-702
dpSlotCfgLogBaseAddress ..... 3-702
dpSlotCfgNumSlots ..... 3-702
dpSlotCfgSlaveAddress ..... 3-702
dpSlotCfgSlotNr ..... 3-702
dpSlotCfgValid ..... 3-702
dpSlotStateComm ..... 3-702
dpSlotStateRecvTelegram ..... 3-703
dpSlotStateSendTelegram ..... 3-703
dpSlotStateTelegramType ..... 3-703
DpSync ..... 3-701
dpSysCfgAvailable ..... 3-703
dpSysCfgNumMaster ..... 3-703
dpSysCfgValid ..... 3-703
dpSysCfgVersionDpm ..... 3-703
dpSysCfgVersionDpr ..... 3-703
dpSysCfgVersionDprEx ..... 3-704
dpSysCfgVersionHost ..... 3-704
dpSysStateDpmInit ..... 3-704
DRAM_FILESYST_CONFIG:MD 11292 ..... 2-235
DRAM_FILESYST_SAVE_MASK:MD 11291 ..... 2-235
DRAM_FILESYSTEM_MASK:MD 11290 ..... 2-235
DRF active ..... 3-548
DRF value ..... 3-605
DRFActive ..... 3-548
drfVal ..... 3-605
DRIFT_ENABLE:MD 36700 ..... 2-369
DRIFT_LIMIT:MD 36710 ..... 2-369
DRIFT_VALUE:MD 36720 ..... 2-369
DRILL_VELO_LIMIT:MD 35550 ..... 2-365
Drive assignment (driveIndex) ..... 3-493, 3-587
Drive assignment (logDriveNo) ..... 3-497, 3-591
Drive error code for alarm 300911 ..... 3-621, 3-623
Drive load in % (611D only) ..... 3-486, 3-580
Drive power in W (611D only) ..... 3-487, 3-581
Drive ready ..... 3-494, 3-588
Drive switched on ..... 3-494, 3-588
Drive type ..... 3-683
DRIVE_AX_RATIO_DENOM:MD 31050 ..... 2-346
DRIVE_AX_RATIO_NUMERA:MD 31060 ..... 2-346
DRIVE_AX_RATIO2_DENOM:MD 31064 ..... 2-346
DRIVE_AX_RATIO2_NUMERA:MD 31066 ..... 2-346
DRIVE_DAMPING
MD 5161 ..... 2-157

© Siemens AG 2004 All Rights Reserved

DRIVE_DIAGNOSIS:MD 13100 .....2-250
DRIVE_ENC_RATIO_DENOM:MD 31070 .2-346
DRIVE_ENC_RATIO_NUMERA:MD 31080 .....
.....2-346
DRIVE_FUNCTION_MASK:MD 13070.....2-250
DRIVE_INVERTER_CODE:MD 13020.....2-249
DRIVE_IS_ACTIVE:MD 13000 .....2-249
DRIVE_LOGIC_ADDRESS:MD 13050.....2-250
DRIVE_LOGIC_NR:MD 13010 .....2-249
DRIVE_MASS
MD 5150 .....2-156
DRIVE_MAX_SPEED
MD 5401 .....2-160
DRIVE_MAX_SPEED_SETUP
MD 5420 .....2-160
DRIVE_MODULE_TYPE:MD 13030.....2-249
DRIVE_NATURAL_FREQUENCY
MD 5163 .....2-157
DRIVE_NATURAL_FREQUENCY_A
MD 5162 .....2-157
DRIVE_NATURAL_FREQUENCY_B
MD 5164 .....2-157
DRIVE_SIGNAL_TRACKING:MD 36730 ...2-370
DRIVE_TELEGRAM_TYPE:MD 13060 .....2-250
DRIVE_TYPE:MD 13040 .....2-249
DRIVE_TYPE_DP:MD 13080 .....2-250
drive2ndTorqueLimit ..... 3-492, 3-586
driveActMotorSwitch ..... 3-492, 3-586
driveActParamSet..... 3-492, 3-586
driveClass1Alarm ..... 3-492, 3-586
driveContrMode..... 3-492, 3-586
driveCoolerTempWarn ..... 3-493, 3-587
driveDesMotorSwitch ..... 3-493, 3-587
driveDesParamSet..... 3-493, 3-587
driveFastStop..... 3-493, 3-587
driveFreqMode ..... 3-493, 3-587
driveImpulseEnabled..... 3-493, 3-587
driveIndex..... 3-493, 3-587
driveIntegDisable..... 3-493, 3-587
driveLinkVoltageOk..... 3-493, 3-587
driveLoad.....3-506, 3-509, 3-608, 3-614
driveMotorTempWarn ..... 3-494, 3-588
driveNumCrcErrors ..... 3-494, 3-588
driveParked..... 3-494, 3-588
drivePowerOn ..... 3-494, 3-588
driveProgMessages ..... 3-494, 3-588
driveReady ..... 3-494, 3-588
driveRunLevel ..... 3-494, 3-588
driveSetupMode ..... 3-495, 3-589
driveSpeedSmoothing..... 3-495, 3-589
driveType.....3-460
driveTypeChangeCnt .....3-460
Dry run feedrate ..... 3-550, 3-687
DRY_RUN_FEED:MD 42100.....2-398
DRY_RUN_FEED_MODE:MD 42101.....2-399
DRYRUN_MASK:MD 10704 .....2-227
DUAL_GAIN_COMP_SMOOTH_RANGE
MD 5466 .....2-161
DUAL_GAIN_COMP_SMOOTH_Z_R
MD 5482 .....2-162
dummy .....3-605
Duplo number.....3-627, 3-646, 3-661
Duplo number of active tool..... 3-528
Duplo number of programmed tool)..... 3-539
duploNo .....3-627, 3-661
Dval..... 3-564
Dwell time unit ..... 3-545
DYN_MATCH_ENABLE:MD 32900 ..... 2-356
DYN_MATCH_TIME:MD 32910..... 2-356
Dynamic parameters for synchronous actions... 3-691

## E

Eadr ..... 3-564
Edge number..... 3-661
Edge offset value (edgeData)..... 3-626
Edge offset value parameter (cuttEdgeParam).. 3-625
edgeData .....3-626, 3-633, 3-677
edgeECData.....3-670, 3-671
edgeSCData.....3-674, 3-675
effComp1 .....3-495, 3-589
effComp2 .....3-495, 3-589
EG axis number master axis ..... 3-517
EG block change criterion..... 3-538
EG denominator link factor..... 3-517
EG link active ..... 3-517
EG link type..... 3-518
EG number of master axes ..... 3-518
EG numerator link factor..... 3-518
EG synchronism deviation ..... 3-547
EG synchronous position of master axis..... 3-518
EG synchronous position of slave axis ..... 3-518
EG_ACC_TOL:MD 37560 ..... 2-392
EG_VEL_WARNING:MD 37550 ..... 2-392
EMF_BREAK_ENABLE
MD 1049 ..... 2-90
EMF_VOLTAGE
MD 1114 ..... 2-93
Empty location search strategy during tool change .....
..... 3-640
Enable inverter impulse .....3-493, 3-587
ENABLE_ALARM_MASK:MD 11411..... 2-240
ENABLE_CHAN_AX_GAP:MD 11640..... 2-242
ENABLE_STAR_DELTA
MD 1013 ..... 2-86
ENABLE_START_MODE_MASK_PRT:MD
22621 ..... 2-303
ENC_ABS_BUFFERING:MD 30270 ..... 2-342
ENC_ABS_DIAGNOSIS_DIRECT
MD 1033 ..... 2-89
ENC_ABS_DIAGNOSIS_MOTOR
MD 1023 ..... 2-87
MD 5023 ..... 2-154
ENC_ABS_RESOL_DIRECT
MD 1032 ..... 2-89
ENC_ABS_RESOL_MOTOR
MD 1022 ..... 2-87
MD 5022 ..... 2-154
ENC_ABS_TURN_MOTOR
MD 5021 ..... 2-154
ENC_ABS_TURNS_DIRECT
MD 1031 ..... 2-88
ENC_ABS_TURNS_MODULO:MD 34220 2-360

© Siemens AG 2004 All Rights Reserved

ENC_ABS_TURNS_MOTOR
MD 1021 ....2-87
ENC_ACTVAL_SMOOTH_TIME:MD 34990 ....2-361
ENC_CHANGE_TOL:MD 36500 ....2-368
ENC_COMP_ENABLE:MD 32700 ....2-355
ENC_CONFIG
MD 1027 ....2-88
MD 5027 ....2-155
ENC_CONFIG_DIRECT
MD 1037 ....2-89
ENC_DIFF_TOL:MD 36510 ....2-368
ENC_FEEDBACK_POL:MD 32110 ....2-349
ENC_FREQ_LIMIT:MD 36300 ....2-368
ENC_FREQ_LIMIT_LOW:MD 36302 ....2-368
ENC_GRID_POINT_DIST:MD 31010 ....2-345
ENC_HANDWHEEL_INPUT_NR:MD 11344 ....2-237
ENC_HANDWHEEL_MODULE_NR:MD 11342 ....2-237
ENC_HANDWHEEL_SEGMENT_NR:MD 11340 ....2-236
ENC_INPUT_NR:MD 30230 ....2-341
ENC_INVERS:MD 34320 ....2-361
ENC_IS_DIRECT:MD 31040 ....2-345
ENC_IS_DIRECT2:MD 31044 ....2-345
ENC_IS_INDEPENDENT:MD 30242 ....2-341
ENC_IS_LINEAR:MD 31000 ....2-345
ENC_MARKER_INC:MD 34310 ....2-361
ENC_MEAS_TYPE:MD 30244 ....2-341
ENC_MODULE_NR:MD 30220 ....2-341
ENC_PHASE_ERROR_CORRECTION
MD 1008 ....2-85
MD 5008 ....2-154
ENC_PULSE_MULT:MD 31025 ....2-345
ENC_REFP_MARKER_DIST:MD 34300 ....2-360
ENC_REFP_MODE:MD 34200 ....2-360
ENC_REFP_STATE:MD 34210 ....2-360
ENC_RESOL:MD 31020 ....2-345
ENC_RESOL_DIRECT
MD 1007 ....2-85
ENC_RESOL_MOTOR
MD 1005 ....2-85
MD 5005 ....2-154
ENC_SEGMENT_NR:MD 30210 ....2-341
ENC_SERIAL_NUMBER:MD 34230 ....2-360
ENC_SPEED_LIMIT
MD 5609 ....2-164
ENC_TYPE
MD 5790 ....2-167
ENC_TYPE:MD 30240 ....2-341
ENC_TYPE_DIRECT
MD 1791 ....2-147
ENC_TYPE_MOTOR
MD 1790 ....2-147
ENC_ZERO_MONITORING:MD 36310 ....2-368
encChoice ....3-495, 3-589
Encoder master value ....3-503, 3-597
encTypeDirect ....3-620, 3-622
encTypeMotor ....3-620, 3-623
EPS_TLIFT_TANG_STEP:MD 37400 ....2-391
EQUIV_CURRCTRL_TIME:MD 32800 ....2-356
EQUIV_SPEEDCTRL_TIME:MD 32810 ....2-356
errCodeSetNrGen ....3-704
errCodeSetNrPi ....3-704
Error code set for communication errors ....3-704
Error code set P1 for comm. errors ....3-704
Error on status transitions ....3-698
Error SPL-KDV ....3-471
ESR alarm status ....3-520
ESR axis enable ....3-484, 3-578
ESR axis status ....3-484, 3-578
ESR start signal ....3-457
ESR_DELAY_TIME1:MD 21380 ....2-295
ESR_DELAY_TIME2:MD 21381 ....2-295
ESR_REACTION:MD 37500 ....2-391
Estimation of program runtime - downtime ....3-527
Estimation of program runtime - machining time 3-527
EULER_ANGLE_NAME_TAB:MD 10620 ....2-225
Eval ....3-565
Event state ....3-714
eventActive ....3-714
eventActiveStatus ....3-714
EVERY_ENC_SERIAL_NUMBER:MD 34232 ....2-360
EXACT_POS_MODE:MD 20550 ....2-286
EXACT_POS_MODE_G0_TO_G1:MD 20552 ....2-286
Existing TO edge parameters ....3-427
Expected Dpr version from DPR_SS_VERSION 3-704
EXPONENT_LIMIT
MD 9030 ....2-171
EXPONENT_SCIENCE
MD 9031 ....2-171
EXT_PROG_PATH:MD 42700 ....2-405
Extended ID no. of the slave ....3-700
extension ....3-574
Extension of the auxiliary function ....3-574
EXTERN_CHAN_SYNC_M_NO_MAX:MD 10802 ....2-229
EXTERN_CHAN_SYNC_M_NO_MIN:MD 10800 ....2-229
EXTERN_DIGITS_TOOL_NO:MD 10888 ....2-232
EXTERN_DOUBLE_TURRET_DIST:MD 42162 ....2-400
EXTERN_DOUBLE_TURRET_ON:MD 10812 ....2-230
EXTERN_FIXED_FEEDRATE_F1_F9:MD 42160 ....2-399
EXTERN_FIXED_FEEDRATE_F1_ON:MD 22920 ....2-305
EXTERN_FLOATINGPOINT_PROG:MD 10884 ....2-231
EXTERN_FUNCTION_MASK:MD 20734 ....2-288
EXTERN_G_NO_MAC_CYCLE:MD 10816 ....2-230
EXTERN_G_NO_MAC_CYCLE_NAME:MD 10817 ....2-230
EXTERN_G0_LINEAR_MODE:MD 20732 2-287
EXTERN_GCODE_GROUPS_TO_PLC:MD 22512 ....2-301
EXTERN_GCODE_RESET_MODE:MD 20156 ....2-278

© Siemens AG 2004 All Rights Reserved

EXTERN_GCODE_RESET_VALUES:MD 20154 ....2-278
EXTERN_INCREMENT_SYSTEM:MD 10886 ....2-231
EXTERN_INTERRUPT_BITS_M96:MD 10808 ....2-230
EXTERN_INTERRUPT_NUM_ASUP:MD 10818 ....2-231
EXTERN_INTERRUPT_NUM_RETRAC:MD 10820....2-231
EXTERN_M_NO_DISABLE_INT:MD 10806 ....2-230
EXTERN_M_NO_MAC_CYCLE:MD 108142-230
EXTERN_M_NO_MAC_CYCLE_NAME:MD 10815....2-230
EXTERN_M_NO_SET_INT:MD 10804....2-229
EXTERN_MEAS_G31_P_SIGNAL:MD 10810....2-230
EXTERN_PARALLEL_GEOAX:MD 22930.2-306
EXTERN_REF_POSITION_G30_1:MD 43340 ....2-409
EXTERN_RIGID_TAPPING_M_NR:MD 200952-274
EXTERN_TOOLPROG_MODE:MD 10890 2-232
External execution ....3-557
External NCK input of SI prog. log. from NCK peri. ....3-468
External NCK output of SI prog. log. to NCK per.3-468
External PLC input of SI prog. log. from PLC peri. ....3-468
External PLC output of the SI progr. logic....3-468
externCncSystem ....3-427
extProgActive....3-536
extProgBufferName ....3-557
extProgFlag ....3-557
extraCuttEdgeParams....3-427
extUnit....3-481, 3-575, 3-599

## F

F_VALUES_ACTIVE_AFTER_RESET:MD 22410....2-301
FACTOR_INERTIA
MD 1076 ....2-90
FACTOR_MM_DM
MD 1562 ....2-130
FASTIO_ANA_INPUT_WEIGHT:MD 10320....2-217
FASTIO_ANA_NUM_INPUTS:MD 10300 ..2-217
FASTIO_ANA_NUM_OUTPUTS:MD 10310 ....2-217
FASTIO_ANA_OUTPUT_WEIGHT:MD 10330....2-217
FASTIO_DIG_NUM_INPUTS:MD 10350 ...2-217
FASTIO_DIG_NUM_OUTPUTS:MD 103602-218
FASTIO_DIG_SHORT_CIRCUIT:MD 10361....2-218
fctGenState.... 3-495, 3-589
Feed disable ....3-548
Feed forward control factor torque .... 3-497, 3-591
Feed forward control factor velocity .... 3-497, 3-591
Feed forward control mode .... 3-498, 3-592
FEEDBK_SPEED_THRESHOLD
MD 5422 .... 2-161
Feedrate override....3-495, 3-589, 3-606
feedRateIpoOvr .... 3-536
feedRateIpoUnit.... 3-536
feedRateOvr....3-495, 3-589, 3-606
feedStopActive .... 3-548
FFS diagnostic data .... 3-459
FFS free memory .... 3-461
FFS memory defect.... 3-458
FFS net size .... 3-462
FFS total size .... 3-472
FFS used memory .... 3-473
FFW_ACTIVATION_MODE:MD 32630 .... 2-354
FFW_FCTRL_FIL_1_BW
MD 5269 .... 2-159
FFW_FCTRL_FIL_1_BW_NUM
MD 5270 .... 2-159
FFW_FCTRL_FIL_1_DAMP
MD 5265 .... 2-159
FFW_FCTRL_FIL_1_FREQ
MD 5264 .... 2-159
FFW_FCTRL_FIL_1_SUP_FREQ
MD 5268 .... 2-159
FFW_FCTRL_FILTER_TYPE
MD 5261 .... 2-159
FFW_MODE:MD 32620 .... 2-354
FGROUP_DEFAULT_AXES:MD 22420 .... 2-301
FIELD_WEAKENING_SPEED
MD 1142 .... 2-98
FIELDCTRL_GAIN
MD 1150 .... 2-99
FIELDCTRL_INTEGRATOR_TIME
MD 1151 .... 2-100
FIFO buffer for execution from external source.. 3-557
FIFO variable for synchronous actions .... 3-691
Fill level of the IPO buffer (integer value in %).. 3-708
Fill-level display SPL-KDV .... 3-471
fillText1 ....3-476, 3-478, 3-480
fillText2 ....3-476, 3-478, 3-480
fillText3 ....3-476, 3-478, 3-480
fillText4 ....3-476, 3-478, 3-480
findBlActive .... 3-537
Fine offset ....3-523, 3-573
Fine offset I1 X.... 3-667
Fine offset I1 Y.... 3-667
Fine offset I1 Z.... 3-667
Fine offset I2 X.... 3-667
Fine offset I2 Y.... 3-667
Fine offset I2 Z.... 3-667
Fine offset I3 X.... 3-668
Fine offset I3 Y.... 3-668
Fine offset I3 Z.... 3-668
Fine offset I4 X.... 3-668
Fine offset I4 Y.... 3-668
Fine offset I4 Z.... 3-668
Fine offset of offset of rotary axis v1.... 3-668
Fine offset of offset of rotary axis v2.... 3-668
Fine offset with frames . 3-512, 3-513, 3-572, 3-611
FIPO_TYPE:MD 33000 .... 2-357
Firmware date ....3-620, 3-623

© Siemens AG 2004 All Rights Reserved

Firmware version ..... 3-620, 3-623
FIRMWARE_DATE
MD 1798 .....2-147
MD 5798 .....2-167
FIRMWARE_VERSION
MD 1799 .....2-148
MD 5799 .....2-167
firmwareDate..... 3-620, 3-623
firmwareVersion ..... 3-620, 3-623
FIRST_LANGUAGE
MD 9003 .....2-169
FIX_POINT_POS:MD 30600 .....2-344
FIXED_LINK_VOLTAGE
MD 1161 .....2-100
FIXED_STOP_ACKN_MASK:MD 37060....2-387
FIXED_STOP_ALARM_MASK:MD 37050 .2-387
FIXED_STOP_ALARM_REACTION:MD 37052 .....2-387
FIXED_STOP_ANA_TORQUE:MD 37070 .2-387
FIXED_STOP_BY_SENSOR:MD 37040....2-387
FIXED_STOP_CONTROL:MD 37002 .....2-386
FIXED_STOP_MODE:MD 37000 .....2-386
FIXED_STOP_SWITCH:MD 43500.....2-410
FIXED_STOP_THRESHOLD:MD 37030....2-387
FIXED_STOP_TORQUE:MD 43510.....2-410
FIXED_STOP_TORQUE_DEF:MD 37010 .2-386
FIXED_STOP_TORQUE_FACTOR:MD 37014 .. .....2-386
FIXED_STOP_TORQUE_RAMP_TIME:MD 37012.....2-386
FIXED_STOP_WINDOW:MD 43520 .....2-410
FIXED_STOP_WINDOW_DEF:MD 37020.2-387
Flag for acceptance test phase ..... 3-499, 3-593
Flag for acceptance test status..... 3-500, 3-593
Flag for NCK-side acceptance test phase.....3-499, .....3-593
Flag for NCK-side SE acceptance test .....3-593
Flag for NCK-side SE acceptance test. .....3-499
Flag variable for synchronous actions .....3-691
FLUID_ELASTIC_MODULUS
MD 5100 .....2-155
FLUX_ACQUISITION_SPEED
MD 1160 .....2-100
FLUX_MODEL_CORRECTION
MD 1159 .....2-100
FOC_ACTIVATION_MODE:MD 37080 .....2-387
FOC_STANDSTILL_DELAY_TIME:MD 36042 ... .....2-366
focStat..... 3-495, 3-589
Following error ..... 3-496, 3-590
For active tech.cycle
block no. of current action .....3-567
FORCE_FFW_WEIGHT
MD 5247 .....2-159
FORCE_LIMIT_THRESHOLD
MD 5230 .....2-158
FORCE_LIMIT_WEIGHT
MD 5231 .....2-158
FORCE_LSB
MD 5713 .....2-166
FORCECONTROLLED_SYSTEM_GAIN
MD 5240 .....2-158
FORCECTRL_CONFIG
MD 5241 ..... 2-158
FORCECTRL_DIFF_TIME
MD 5246 ..... 2-159
FORCECTRL_GAIN
MD 5242 ..... 2-158
FORCECTRL_GAIN_RED
MD 5243 ..... 2-158
FORCECTRL_INTEGRATOR_TIME
MD 5244 ..... 2-159
FORCECTRL_PT1_TIME
MD 5245 ..... 2-159
forward ..... 3-559, 3-562
FPU_CTRLWORD_INIT:MD 18910..... 2-270
FPU_ERROR_MODE:MD 18900..... 2-270
FPU_EXEPTION_MASK:MD 18920..... 2-270
Frame selection ..... 3-523
FRAME_ACS_SET:MD 24030..... 2-307
FRAME_ADAPT_MODE:MD 24040 ..... 2-307
FRAME_ADD_COMPONENTS:MD 24000 2-306
FRAME_ANGLE_INPUT_MODE:MD 10600 ..... ..... 2-223
FRAME_GEOAX_CHANGE_MODE:MD 10602 ..... 2-224
FRAME_OFFSET_INCR_PROG:MD 42440 ..... ..... 2-400
FRAME_OR_CORRPOS_NOTALLOWED:MD 32074 ..... 2-348
FRAME_SAA_MODE:MD 24050 ..... 2-307
FRAME_SAVE_MASK:MD 10617 ..... 2-224
FRAME_SUPPRESS_MODE:MD 24020... 2-307
Free memory for synchronous actions..... 3-527
Free memory in bytes..... 3-460
Free SRAM in bytes ..... 3-460
freeDirectorys ..... 3-460
freeFiles..... 3-460
freeMem ..... 3-460
freeMemDram ..... 3-460
freeMemDram2PassF ..... 3-460
freeMemDramPassF ..... 3-461
freeMemFfs..... 3-461
freeMemSramPassF ..... 3-461
freeProtokolFiles..... 3-461
FRICT_COMP_ACCEL1:MD 32550 ..... 2-353
FRICT_COMP_ACCEL2:MD 32560 ..... 2-353
FRICT_COMP_ACCEL3:MD 32570 ..... 2-353
FRICT_COMP_ADAPT_ENABLE:MD 32510..... ..... 2-353
FRICT_COMP_CONST_MAX:MD 32520.. 2-353
FRICT_COMP_CONST_MIN:MD 32530... 2-353
FRICT_COMP_ENABLE:MD 32500 ..... 2-353
FRICT_COMP_INC_FACTOR:MD 32580 . 2-354
FRICT_COMP_MODE:MD 32490..... 2-352
FRICT_COMP_TIME:MD 32540..... 2-353
FRICTION_COMP_GRADIENT
MD 5460 ..... 2-161
FRICTION_COMP_OUTPUT_RANGE
MD 5461 ..... 2-161
FUNC_SWITCH
MD 1012 ..... 2-85
MD 5012 ..... 2-154
Function..... 3-454
fxsInfo..... 3-496, 3-590

© Siemens AG 2004 All Rights Reserved

fxsStat ..... 3-496, 3-590

## G

G0_LINEAR_MODE:MD 20730 .....2-287
G00
Path axes traverse as pos. axes .....3-537
G00_ACCEL_FACTOR:MD 32434 .....2-352
G00_JERK_FACTOR:MD 32435 .....2-352
G0Mode .....3-537
G53_TOOLCORR:MD 10760 .....2-229
GAIN_FOR_MONITORING:MD 31520.....2-347
GANTRY_ACT_POS_TOL_ERROR:MD 37135 .....2-388
GANTRY_AXIS_TYPE:MD 37100 .....2-388
GANTRY_BREAK_UP:MD 37140 .....2-388
GANTRY_FUNCTION_MASK:MD 37150 ..2-388
GANTRY_POS_TOL_ERROR:MD 37120..2-388
GANTRY_POS_TOL_REF:MD 37130.....2-388
GANTRY_POS_TOL_WARNING:MD 37110 ..... .....2-388
GCODE_GROUPS_TO_PLC:MD 22510 ...2-301
GCODE_GROUPS_TO_PLC_MODE:MD 22515 .....2-302
GCODE_RESET_MODE:MD 20152 .....2-278
GCODE_RESET_VALUES:MD 20150.....2-277
GEAR_CHANGE_WAIT_TIME:MD 10192 .2-215
GEAR_STEP_CHANGE_ENABLE:MD 35010.... .....2-361
GEAR_STEP_CHANGE_POSITION:MD 35012 .....2-361
GEAR_STEP_MAX_VELO:MD 35110 .....2-362
GEAR_STEP_MAX_VELO_LIMIT:MD 35130..... .....2-363
GEAR_STEP_MIN_VELO:MD 35120.....2-363
GEAR_STEP_MIN_VELO_LIMIT:MD 35140 ..... .....2-363
GEAR_STEP_POSCTRL_ACCEL:MD 35210..... .....2-363
GEAR_STEP_SPEEDCTRL_ACCEL:MD 35200 .....2-363
GEAR_STEP_USED_IN_AXISMODE:MD 35014 .....2-362
GEN_AXIS_MIN_SPEED
MD 1635 .....2-137
GEN_STOP_DELAY
MD 1637 .....2-137
General result value.....3-715
GEOAX_CHANGE_M_CODE:MD 22532...2-302
GEOAX_CHANGE_RESET:MD 20118 .....2-276
geoAxisNr .....3-606
Geometry or auxiliary axis .....3-600
Global basic frame screen form.....3-524
Global basic unit .....3-426
Global uplaoad starting point for ACC entries ....3-455
GMMC_INFO_NO_UNIT:MD 17200.....2-253
GMMC_INFO_NO_UNIT_STATUS:MD 17201 ... .....2-253
GroupID.....3-454
Gruppe ..... 3-454, 3-514
Gruppe_NUM .....3-454, 3-514
GUD_AREA_SAVE_TAB:MD 11140 ..... 2-233
gwpsActive..... 3-506, 3-509, 3-608, 3-614

## H

Hadr ..... 3-565
HANDWH_CHAN_STOP_COND:MD 20624..... ..... 2-287
HANDWH_GEOAX_MAX_INCR_SIZE:MD 20620 ..... 2-286
HANDWH_GEOAX_MAX_INCR_VSIZE:MD 20622 ..... 2-287
HANDWH_IMP_PER_LATCH:MD 11320.. 2-236
HANDWH_MAX_INCR_SIZE:MD 32080... 2-348
HANDWH_MAX_INCR_VELO_SIZE:MD 32082 ..... 2-349
HANDWH_ORIAX_MAX_INCR_SIZE:MD 20621 ..... 2-287
HANDWH_ORIAX_MAX_INCR_VSIZE:MD 20623 ..... 2-287
HANDWH_REVERSE:MD 11310 ..... 2-236
HANDWH_STOP_COND:MD 32084 ..... 2-349
HANDWH_TRUE_DISTANCE:MD 11346 . 2-237
HANDWH_VDI_REPRESENTATION:MD 11324 ..... 2-236
HANDWH_VELO_OVERLAY_FACTOR:MD 32090 ..... 2-349
HANDWHEEL_INPUT:MD 11352 ..... 2-238
HANDWHEEL_LOGIC_ADDRESS:MD 11353.... ..... 2-238
HANDWHEEL_MODULE:MD 11351 ..... 2-238
HANDWHEEL_SEGMENT:MD 11350..... 2-237
handwheelAss .....3-496, 3-590, 3-606
Heatsink temperature monitoring ..... 3-493, 3-587
HIRTH_IS_ACTIVE:MD 30505 ..... 2-344
HMI_HELP_SYSTEMS
MD 9991..... 2-205
HMI_MONITOR
MD 9032..... 2-171
HMI_TESTAUTOMAT_OPTION
MD 9992..... 2-205
HMI_WIZARD_OPTION
MD 9993..... 2-205
Host SW version ..... 3-704
Hval..... 3-565
HW_ASSIGN_ANA_FASTIN:MD 10362.... 2-218
HW_ASSIGN_ANA_FASTOUT:MD 10364 2-218
HW_ASSIGN_DIG_FASTIN:MD 10366..... 2-218
HW_ASSIGN_DIG_FASTOUT:MD 10368. 2-218
HW_CLOCKED_MODULE_MASK:MD 10384 .... ..... 2-219
HW_LEAD_TIME_FASTIO:MD 10382..... 2-219
HW_UPDATE_RATE_FASTIO:MD 10380 2-218
HW_VERSION
MD 1796 ..... 2-147
hwMLFB ..... 3-461
hwProductSerialNr ..... 3-461
hwProductSerialNrL ..... 3-461

© Siemens AG 2004 All Rights Reserved

## I


I/F mode ..... 3-493, 3-587
I/O identifier ..... 3-701
I2T_NOMINAL_REDUCTION
MD 1261 ..... 2-111
I2T_S6_REDUCTION
MD 1260 ..... 2-111
id ..... 3-565, 3-567
ID of the synchronous action ..... 3-565, 3-567
Ident number of the slave ..... 3-700
Identification client NCK/PLC/3RD ..... 3-698
Identifier ..... 3-666
Identifier for geometry/auxiliary axis ..... 3-605
Identifier of active tool ..... 3-530
Identifier of the magazine ..... 3-636, 3-638, 3-639
Identifier programmed tool ..... 3-539
Identifies splitted blocks ..... 3-542
IGNORE_INHIBIT_ASUP:MD 20116 ..... 2-275
IGNORE_OVL_FACTOR_FOR_ADIS:MD 20490 ..... 2-285
IGNORE_SINGLEBLOCK_ASUP:MD 20117 ..... 2-276
IGNORE_SINGLEBLOCK_MASK:MD 10702 ..... 2-227
Image of external NCK inputs of SI progr. logic .. 3-468
Image of int. NCK inputs of SI progr. logic ..... 3-469
Image of int. NCK outputs of the SI progr. logic .. 3-469
Image of int. PLC inputs of the SI progr. logic .... 3-469
Image of int. PLC outputs of the SI progr. logic .. 3-469
Image of the external NCK outputs of SI prog. log. ..... 3-468
Image of the external PLC inputs of SI progr. log. ..... 3-468
Image of the external PLC outputs of SI prog. log. ..... 3-468
Image of the PLC flag-variable for SI prog. logic 3-470
Image of the ZK1PO register ..... 3-619
Image of the ZK1RES register ..... 3-619
Impulse enable for drive ..... 3-496, 3-590
impulseEnable ..... 3-496, 3-590
IN data byte ..... 3-457
IN data double word ..... 3-457
IN data word ..... 3-458
IN Real data ..... 3-457
Incarnation counter ..... 3-700
inclAngle ..... 3-634
Inclination angle of inclined grinding wheel ..... 3-634
Incorrect block occurred ..... 3-535
Increment Hirth tooth system 1st axis ..... 3-665
Increment Hirth tooth system 2nd axis ..... 3-665
index ... 3-496, 3-506, 3-509, 3-590, 3-606, 3-608, 3-614
Index act. G function (current language) ..... 3-568
Index of active G function (ISO Dialect) ..... 3-568
Index of data list ..... 3-714
Index of the active set frame ..... 3-528
INDEX_AX_ASSIGN_POS_TAB:MD 30500 ..... 2-343
INDEX_AX_DENOMINATOR:MD 30502 ... 2-343
INDEX_AX_LENGTH_POS_TAB_1:MD 10900 ..... 2-232
INDEX_AX_LENGTH_POS_TAB_2:MD 10920 ..... 2-232
INDEX_AX_MODE:MD 10940 ..... 2-232
INDEX_AX_NUMERATOR:MD 30501 ..... 2-343
INDEX_AX_OFFSET:MD 30503 ..... 2-344
INDEX_AX_POS_TAB_1:MD 10910 ..... 2-232
INDEX_AX_POS_TAB_2:MD 10930 ..... 2-232
Indexing number ..... 3-498, 3-592
Indic. for operating progr. of DP M ..... 3-697
Indirect encoder used ..... 3-620
Info about available ACC contents ..... 3-695
INFO_CROSSCHECK_CYCLE_TIME:MD 10092 ..... 2-212
INFO_FREE_MEM_CC_MD:MD 18072 .... 2-255
INFO_FREE_MEM_DPR:MD 18070 ..... 2-255
INFO_FREE_MEM_DYNAMIC:MD 18050 2-254
INFO_FREE_MEM_STATIC:MD 18060 .... 2-255
INFO_NUM_SAFE_FILE_ACCESS:MD 10093 ..... 2-212
INFO_PROFISAFE_CYCLE_TIME:MD 10099 ..... 2-213
INFO_SAFETY_CYCLE_TIME:MD 10091 2-211
Information on block type ..... 3-534
INI_FILE_MODE:MD 11220 ..... 2-234
INIT_MD:MD 11200 ..... 2-234
Instruction group ..... 3-514
Instruction group (Function) ..... 3-454
Instruction group (Gruppe) ..... 3-454
INT_INCR_PER_DEG:MD 10210 ..... 2-215
INT_INCR_PER_MM:MD 10200 ..... 2-215
Integrator disable ..... 3-493, 3-587
INTER_VECTOR_NAME_TAB:MD 10644 2-225
Interface for spindle as change position ..... 4-781
INTERMEDIATE_POINT_NAME_TAB:MD 10660 ..... 2-226
Internal NCK input of SI progr. logic ..... 3-469
internal NCK output of the SI progr. logic ..... 3-469
Internal PLC input of SI progr. logic ..... 3-469
Internal PLC output of SI progr. logic ..... 3-469
Internal T number ..... 3-662
Interpolation feedrate, override ..... 3-536
Interpolation feedrate, units ..... 3-536
INVERTER_CODE
MD 1106 ..... 2-92
INVERTER_DERATING_ASYN
MD 1179 ..... 2-101
INVERTER_DERATING_FACT
MD 1099 ..... 2-91
INVERTER_DERATING_SYN
MD 1178 ..... 2-101
INVERTER_MAX_CURR_DERAT
MD 1098 ..... 2-91
INVERTER_MAX_CURRENT
MD 1107 ..... 2-92
INVERTER_MAX_S6_CURR_ASYN
MD 1176 ..... 2-100
INVERTER_MAX_S6_CURRENT
MD 1109 ..... 2-92
INVERTER_MAX_THERMAL_CURR
MD 1108 ..... 2-92


© Siemens AG 2004 All Rights Reserved

INVERTER_RATED_CURR_ASYN
MD 1177 ....2-101
INVERTER_RATED_CURRENT
MD 1111 ....2-93
INVERTER_THERM_CURR_ASYN
MD 1175 ....2-100
invocCount .... 3-559, 3-562
INVOLUTE_AUTO_ANGLE_LIMIT:MD 21016 ....
....2-289
INVOLUTE_RADIUS_DELTA:MD 21015 ...2-289
IPO_CYCLE_TIME:MD 10071 ....2-210
IPO_MAX_LOAD:MD 11510 ....2-241
IPO_PARAM_NAME_TAB:MD 10650 ....2-225
IPO_SPEEDCTRL_DELAY_FACTOR
MD 1665 ....2-139
IPO_SYSCLOCK_TIME_RATIO:MD 10070 ....
....2-210
ipoBlocksOnly ....3-548
IPOBRAKE_BLOCK_EXCHANGE:MD 43600 ....
....2-411
ipoBufLevel ....3-708
IS_CONCURRENT_POS_AX:MD 30450 ...2-343
IS_LOCAL_LINK_AXIS:MD 30560 ....2-344
IS_POS_AX:MD 30000 ....2-339
IS_ROT_AX:MD 30300 ....2-342
IS_SD_MAX_PATH_ACCEL:MD 42502 ....2-403
IS_SD_MAX_PATH_JERK:MD 42512 ....2-403
IS_UNIPOLAR_OUTPUT:MD 30134 ....2-340
IS_VIRTUAL_AX:MD 30132 ....2-340
isDriveUsed .... 3-496, 3-590

## J

JOG at revolutional feedrate ....3-686
Jog mode....3-686
JOG velocity for G94 ....3-686
JOG velocity for G95 ....3-686
JOG velocity for master spindle ....3-686
JOG_AND_POS_JERK_ENABLE:MD 32420 ....
....2-351
JOG_AND_POS_MAX_JERK:MD 32430 ...2-351
JOG_CONT_MODE_LEVELTRIGGRD:MD
41050 ....2-394
JOG_FEED_PER_REV_SOURCE:MD 42600 ....
....2-404
JOG_INC_MODE_LEVELTRIGGRD:MD 11300
....2-236
JOG_INCR_SIZE_TAB:MD 11330 ....2-236
JOG_INCR_WEIGHT:MD 31090 ....2-346
JOG_MODE_KEYS_EDGETRIGGRD:MD
10731 ....2-229
JOG_MODE_MASK:MD 10735 ....2-229
JOG_REV_IS_ACTIVE:MD 41100 ....2-394
JOG_REV_SET_VELO:MD 41120 ....2-395
JOG_REV_VELO:MD 32050 ....2-348
JOG_REV_VELO_RAPID:MD 32040 ....2-348
JOG_ROT_AX_SET_VELO:MD 41130 ....2-395
JOG_SET_VELO:MD 41110 ....2-394
JOG_SPIND_SET_VELO:MD 41200 ....2-395
JOG_VAR_INCR_SIZE:MD 41010 ....2-394
JOG_VELO:MD 32020 ....2-348
JOG_VELO_GEO:MD 21165 .... 2-292
JOG_VELO_ORI:MD 21155 .... 2-292
JOG_VELO_RAPID:MD 32010 .... 2-348
JOG_VELO_RAPID_GEO:MD 21160 .... 2-292
JOG_VELO_RAPID_ORI:MD 21150 .... 2-292

## K

KEYBOARD_STATE
MD 9009 .... 2-169
KEYBOARD_TYPE
MD 9008 .... 2-169
kindOfSumcorr .... 3-427
Kinematic type .... 3-664
kVFactor .... 3-496, 3-590

## L

lag .... 3-496, 3-590
LANG_SUB_NAME:MD 15700 .... 2-253
LANG_SUB_PATH:MD 15702 .... 2-253
LANGUAGE_SETTINGS
MD 9980 .... 2-205
Last assigned T-number for tool management .. 3-646
Last programmed block number .... 3-554, 3-557
lastBlockNoStr .... 3-554, 3-557
Latched probe position in the MCS .... 3-486, 3-580
Latched probe position retransformed in the WCS ....
.... 3-602
LAYOUT_MODE
MD 9021 .... 2-170
LCD_CONTRAST
MD 9000 .... 2-168
LEAD_FUNCTION_MASK:MD 37160 .... 2-388
LEAD_OFFSET_IN_POS:MD 43102 .... 2-408
LEAD_OFFSET_OUT_POS:MD 43106 .... 2-408
LEAD_SCALE_IN_POS:MD 43104 .... 2-408
LEAD_SCALE_OUT_POS:MD 43108 .... 2-408
LEAD_TIME_DIRECT_ENC
MD 1704 .... 2-140
LEAD_TIME_MOTOR_ENC
MD 1703 .... 2-140
LEAD_TYPE:MD 43100 .... 2-408
LEADSCREW_PITCH:MD 31030 .... 2-345
LEN_AC_FIFO:MD 28264 .... 2-334
LEN_PROTOCOL_FILE:MD 11420 .... 2-240
Length in number of bytes .... 3-702
Length of FFS .... 3-705
Length of the path between punches .... 3-570
Level of access rights .... 3-426
Level of IPO buffer .... 3-707
LH_CURVE_GAIN
MD 1144 .... 2-98
LH_CURVE_UPPER_SPEED
MD 1143 .... 2-98
licenseStatus .... 3-461
Licensing status .... 3-461
LIFTFAST_DIST:MD 21200 .... 2-293
LIFTFAST_STOP_COND:MD 21204 .... 2-293
LIFTFAST_WITH_MIRROR:MD 21202 .... 2-293

© Siemens AG 2004 All Rights Reserved

Limit for axial correction $AA_OFF reached.....3-486, .....3-580
LIMIT_I2T
MD 1263 .....2-111
Limitation of protection zone applicate .. 3-445, 3-453
Limiting value achieved via $AA_TOFF[ ].....3-602
Line enabled for modification ..... 3-554, 3-557
Line number of current NC instruction (start 1) 3-552
Link transfer rate.....3-531
Link voltage.....3-620
LINK_BAUDRATE_SWITCH:MD 12540 ....2-245
LINK_RETRY_CTR:MD 12550.....2-245
LINK_TERMINATION:MD 12520.....2-245
LINK_VOLTAGE
MD 1701 .....2-140
LINK_VOLTAGE_GEN_HYST
MD 1632 .....2-136
LINK_VOLTAGE_GEN_OFF
MD 1633 .....2-136
LINK_VOLTAGE_GEN_ON
MD 1631 .....2-136
LINK_VOLTAGE_MON_THRESHOLD
MD 1630 .....2-136
LINK_VOLTAGE_RETRACT
MD 1634 .....2-136
LINK_VOLTAGE_WARN_LIMIT
MD 1604 .....2-133
linkVoltage ..... 3-620, 3-623
linShift .3-511, 3-512, 3-513, 3-572, 3-573, 3-611, ..... 3-617, 3-618
linShiftFine..... 3-512, 3-513, 3-572, 3-573, 3-611
load..... 3-620, 3-623
Load..... 3-506, 3-509, 3-608, 3-614, 3-620
LOAD
MD 1722 .....2-144
LOAD_I2T
MD 1264 .....2-111
LOAD_SMOOTH_TIME
MD 1251 .....2-111
LOAD_SPEEDCTL_DIFF_TIME
MD 1564 .....2-130
LOAD_SPEEDCTL_GAIN
MD 1565 .....2-131
LOAD_SPEEDCTL_LIMIT
MD 1566 .....2-131
Location.....3-661
Location number of the new tool.....3-532
Location-dependent setup offset .....3-670
Location-dependent wear offset .....3-674
Log
Automatic Configuration Save .....3-463
Config. File Save/Load Error Status .....3-463
Configuration File Control .....3-463
Configuration File Name .....3-463
Load trace session during NCK start-up .....3-463
Session descr. loaded at NCK start-up.....3-463
Log file name .....3-715
Log.
Start value integer 16 bit .....3-465
Log. basic address of slot .....3-702
logDriveNo..... 3-497, 3-591
Logging
Access rights of the session ..... 3-467
Active users..... 3-540
Comments on session ..... 3-467
Connection of the session ..... 3-467
Delay after trigger..... 3-466
Delay of start trigger ..... 3-464
Disable of a user ..... 3-473
End actions..... 3-473
Last user run time..... 3-463
Max. no. of files..... 3-472
Max. user run time..... 3-464
Name of the session..... 3-467
No. OEM data lists ..... 3-463
No. of files created ..... 3-474
No. std. data lists..... 3-462
Number of comparisons ..... 3-466
Number of start comparisons..... 3-464
OEM event types..... 3-538
Priority of the session ..... 3-468
Remaining number of comparisons ..... 3-466
Remaining number of start comparisons..... 3-464
res. no. free files ..... 3-461
Standard event types..... 3-538
Start screen form integer 16 bit..... 3-464
Start screen form integer 32 bit..... 3-464
Start value integer 32 bit ..... 3-465
Start value real 32 bit..... 3-465
Start value real 64 bit..... 3-465
Start variable
Col .....3-465
Row .....3-465
Type.....3-465
Unit.....3-465
Status of start triggering ..... 3-464
Trigger mask integer 16-bit..... 3-465
Trigger mask integer 32-bit..... 3-465
Trigger value integer 16-bit..... 3-466
Trigger value integer 32-bit..... 3-466
Trigger value real 32-bit ..... 3-466
Trigger value real 64-bit ..... 3-467
Trigger variable
Area .....3-467
Col .....3-467
Row .....3-467
Type.....3-467
Unit.....3-467
Triggering method ..... 3-466
Triggering status ..... 3-466
Type of start triggering ..... 3-464
User status ..... 3-472
Logical drive number..... 3-683
Long value of the auxiliary function ..... 3-574
LOOKAH_FREQUENCY:MD 32440 ..... 2-352
LOOKAH_FUNCTION_MASK:MD 20455.. 2-284
LOOKAH_NUM_OVR_POINTS:MD 20430 2-284
LOOKAH_OVR_POINTS:MD 20440 ..... 2-284
LOOKAH_RELIEVE_BLOCK_CYCLE:MD 20450 ..... 2-284
LOOKAH_SMOOTH_FACTOR:MD 20460 2-284
LOOKAH_SMOOTH_WITH_FEED:MD 20462.... ..... 2-284

© Siemens AG 2004 All Rights Reserved

LOOKAH_USE_VELO_NEXT_BLOCK:MD 20400 ... 2-283
Lower limit nth polynominal for synchronous action ... 3-521
Lower limit of protection zone, applicate 3-444, 3-451
LPFC_DIAGNOSIS
MD 1733 ... 2-146
LUBRICATION_DIST:MD 33050 ... 2-357
LUD_EXTENDED_SCOPE:MD 11120 ... 2-233
ludAccCounter ... 3-537

## M

M_NO_FCT_CYCLE:MD 10715 ... 2-228
M_NO_FCT_CYCLE_NAME:MD 10716 ... 2-228
M_NO_FCT_CYCLE_PAR:MD 10718 ... 2-228
M_NO_FCT_EOP:MD 10714 ... 2-228
M_NO_FCT_STOPRE:MD 10713 ... 2-228
M01 selected ... 3-548
M19_SPOS:MD 43240 ... 2-409
M19_SPOSMODE:MD 43250 ... 2-409
MA_AX_DRIVELOAD_FROM_PLC1
MD 9426 ... 2-182
MA_AX_DRIVELOAD_FROM_PLC2
MD 9427 ... 2-182
MA_AXES_SHOW_GEO_FIRST
MD 9421 ... 2-181
MA_COORDINATE_SYSTEM
MD 9424 ... 2-182
MA_DISPL_INV_DIR_SPIND_M3
MD 9033 ... 2-171
MA_MAX_SKP_LEVEL
MD 9423 ... 2-182
MA_NUM_DISPLAYED_CHANNELS
MD 9034 ... 2-171
MA_ONLY_MKS_DIST_TO_GO
MD 9420 ... 2-181
MA_ORIAXES_EULER_ANGLE_NAME
MD 9244 ... 2-176
MA_PRESET_FRAMEIDX
MD 9245 ... 2-176
MA_PRESET_MODE
MD 9422 ... 2-182
MA_SCRATCH_DEFAULT_MODE
MD 9425 ... 2-182
MA_SIMULATION_MODE
MD 9480 ... 2-184
MA_SPIND_MAX_POWER
MD 9428 ... 2-182
MA_SPIND_POWER_RANGE
MD 9429 ... 2-182
MA_STAND_SIMULATION_LIMIT
MD 9481 ... 2-184
MA_STAT_DISPLAY_BASE
MD 9242 ... 2-175
MA_TU_DISPLAY_BASE
MD 9243 ... 2-176
machFunc ... 3-537
Machine axis !!CAUTION NCU LINK!! ... 3-695
Machine axis has control over the drive. 3-496, 3-590
Machine axis identifier ... 3-492, 3-586
Machine axis name ... 3-684
MACHINE_ZERO_HIGH
MD 5041 ... 2-155
MACHINE_ZERO_LOW
MD 5042 ... 2-155
Madr ... 3-565
magActPlace ... 3-639
Magazine ... 3-661
Magazine location data ... 3-643
Magazine location hierarchy ... 3-645
Magazine location type ... 3-628
Magazine location user data for a tool magazine 3-657
Magazine of the new tool ... 3-532
Magazine user data for a tool magazine ... 3-656
magBLMag ... 3-636
magCBCmd ... 3-636
magCBCmdState ... 3-636
magCBIdent ... 3-636
magCMCmdPar1 ... 3-636
magCMCmdPar2 ... 3-636
magCmd ... 3-639
magCmdPar1 ... 3-639
magCmdPar2 ... 3-639
magCmdState ... 3-639
magDim ... 3-639
magIdent ... 3-639
magKind ... 3-640
magLink1 ... 3-640
magLink2 ... 3-640
magLocSearchStrat ... 3-640
MAGNETIZING_REACTANCE
MD 1141 ... 2-98
magNo ... 3-640
magNrPlaces ... 3-640
magRPlaces ... 3-636
magSearch ... 3-637
magState ... 3-640
magToolSearchStrat ... 3-640
magVIdent ... 3-638
magVNo ... 3-638
magVPlaces ... 3-637
magWearCompoundNo ... 3-641
magZWMag ... 3-637
MAINTENANCE_DATA:MD 33060 ... 2-357
markActiveList ... 3-537
maskToolManagement ... 3-428, 3-436
Master tool holder for cutting edge selection ... 3-538
Max. no of data per data list for trace protocol ... 3-429
Max. No. avail. tool adapt. data sets ... 3-428
Max. no. of data per data list for trace protocol ... 3-429
Max. no. of event types for trace protocolling ... 3-429
Max. number edges per tool ... 3-429
Max. number of directories which may be created ... 3-472
Max. number of files which may be created ... 3-472
Max. number total offsets per edge ... 3-429
Max. safety speed difference NCK - drive ... 3-501, 3-595
MAX_ACCEL_OVL_FACTOR:MD 32310 ... 2-350
MAX_AX_ACCEL:MD 32300 ... 2-350
MAX_AX_JERK:MD 32431 ... 2-351

© Siemens AG 2004 All Rights Reserved

MAX_AX_VELO:MD 32000 .....2-347
MAX_BLOCKS_IN_IPOBUFFER:MD 42990.....
.....2-407
MAX_FORCE_FROM_NC
MD 5725 .....2-167
MAX_LEAD_ANGLE:MD 21090 .....2-290
MAX_PATH_JERK:MD 20600 .....2-286
MAX_PROGRAMM_SIZE_CHECK
MD 9464 .....2-184
MAX_TILT_ANGLE:MD 21092 .....2-290
MAX_TIME_ROTORPOS_ID
MD 1078 .....2-91
MAX_TORQUE_FROM_NC
MD 1725 .....2-145
MAX_TURN_ROTORPOS_IDENT
MD 1020 .....2-87
maxCuttingEdgeNo.....3-428
maxCycleTimeBrut ..... 3-704, 3-708
maxCycleTimeNet ..... 3-704, 3-708
maxElementsFastFifoUsed .....3-714
maxFileLength.....3-714
maxGrossFileLengthUsed .....3-714
Maximum number of magazine locations.....3-433
Maximum access time to bus .....3-697
Maximum Fifo buffer fill level reached .....3-714
Maximum gross cycle time.....3-708
Maximum length of log file .....3-714
Maximum log file size.....3-714
Maximum net cycle time .....3-708
Maximum number of available channels.....3-428
Maximum number of available drives .....3-429
Maximum number of available machine axes.....3-429
Maximum number of axis containers.....3-428
Maximum number of files per directory.....3-462
Maximum number of handwheels .....3-432
Maximum number of magazines.....3-433
Maximum number of protection zones.....3-438
Maximum number of slots per axis container .....3-428
Maximum number of subdirectories per directory .....
.....3-462
Maximum peripheral speed of the grinding wheel.....
.....3-634
Maximum position of 1st rotary axis .....3-666
Maximum position of 2nd rotary axis .....3-666
Maximum rotary speed of the grinding wheel .....3-634
Maximum spindle speed at G26 .....3-688
Maximum value D number .....3-428
maxNetFileLengthTooSmall .....3-715
MAXNUM_PLC_CTRL_AXES:MD 10008 ..2-208
MAXNUM_REPLACEMENT_TOOLS:MD 17500
.....2-253
MAXNUM_USER_DATA_FLOAT:MD 14508.....
.....2-252
MAXNUM_USER_DATA_HEX:MD 14506 .2-252
MAXNUM_USER_DATA_INT:MD 14504 ...2-252
maxNumAdapter.....3-428
maxnumAlarms .....3-428
maxnumChannels.....3-428
maxnumContainer .....3-428
maxnumContainerSlots .....3-428
maxnumCuttEdges_Tool .....3-429
maxnumDrives .....3-429
maxnumEdgeSC..... 3-429
maxnumEventTypes..... 3-429
maxnumGlobMachAxes..... 3-429
maxNumSumcorr ..... 3-429
maxnumTraceProtData..... 3-429
maxnumTraceProtDataList..... 3-429
maxRotSpeed..... 3-634
maxTipSpeed ..... 3-634
MD_AX_TEA_FILTER
MD 9952..... 2-204
MD_AX_TEA_IDX_LIMIT
MD 9953..... 2-204
MD_CH_TEA_FILTER
MD 9954..... 2-204
MD_CH_TEA_IDX_LIMIT
MD 9955..... 2-204
MD_DRV_TEA_FILTER
MD 9956..... 2-204, 2-205
MD_DRV_TEA_IDX_LIMIT
MD 9957..... 2-205
MD_FILE_STYLE:MD 11230 ..... 2-234
MD_NC_TEA_FILTER
MD 9950..... 2-204
MD_NC_TEA_IDX_LIMIT
MD 9951..... 2-204
MD_TEXT_SWITCH
MD 9900..... 2-204
MDB_JOG_CONT_MODE_LEVELTRIGGRD ... 3-686
MDB_JOG_REV_IS_ACTIVE..... 3-686
MDB_WORKAREA_MINUS_ENABLE ..... 3-688
MDB_WORKAREA_PLUS_ENABLE ..... 3-688
MDBA_DRIVE_IS_ACTIVE..... 3-683
MDCA_CTRLOUT_MODULE_NR ..... 3-685
MDCA_CTRLOUT_TYPE ..... 3-685
MDCA_DRIVE_LOGIC_NR ..... 3-683
MDCA_DRIVE_MODULE_TYPE ..... 3-683
MDCA_DRIVE_TYPE..... 3-683
MDCA_ENC_MODULE_NR..... 3-685
MDCA_ENC_TYPE..... 3-685
MDD_DRY_RUN_FEED..... 3-687
MDD_INT_INCR_PER_DEG..... 3-683
MDD_INT_INCR_PER_MM ..... 3-683
MDD_JOG_REV_SET_VELO ..... 3-686
MDD_JOG_SET_VELO..... 3-686
MDD_JOG_SPIND_SET_VELO ..... 3-686
MDD_JOG_VAR_INCR_SIZE ..... 3-686
MDD_PA_CENT_ABS_0 ..... 3-440, 3-447
MDD_PA_CENT_ABS_1 ..... 3-440, 3-447
MDD_PA_CENT_ABS_2 ..... 3-440, 3-447
MDD_PA_CENT_ABS_3 ..... 3-440, 3-447
MDD_PA_CENT_ABS_4 ..... 3-440, 3-447
MDD_PA_CENT_ABS_5 ..... 3-440, 3-447
MDD_PA_CENT_ABS_6 ..... 3-440, 3-448
MDD_PA_CENT_ABS_7 ..... 3-441, 3-448
MDD_PA_CENT_ABS_8 ..... 3-441, 3-448
MDD_PA_CENT_ABS_9 ..... 3-441, 3-448
MDD_PA_CENT_ORD_0 ..... 3-441, 3-448
MDD_PA_CENT_ORD_1 ..... 3-441, 3-448
MDD_PA_CENT_ORD_2 ..... 3-441, 3-448
MDD_PA_CENT_ORD_3 ..... 3-441, 3-448
MDD_PA_CENT_ORD_4 ..... 3-441, 3-448

© Siemens AG 2004 All Rights Reserved

MDD_PA_CENT_ORD_5 ..... 3-441, 3-448
MDD_PA_CENT_ORD_6 ..... 3-441, 3-448
MDD_PA_CENT_ORD_7 ..... 3-441, 3-449
MDD_PA_CENT_ORD_8 ..... 3-442, 3-449
MDD_PA_CENT_ORD_9 ..... 3-442, 3-449
MDD_PA_CONT_ABS_0 ..... 3-442, 3-449
MDD_PA_CONT_ABS_1 ..... 3-442, 3-449
MDD_PA_CONT_ABS_2 ..... 3-442, 3-449
MDD_PA_CONT_ABS_3 ..... 3-442, 3-449
MDD_PA_CONT_ABS_4 ..... 3-442, 3-449
MDD_PA_CONT_ABS_5 ..... 3-442, 3-449
MDD_PA_CONT_ABS_6 ..... 3-442, 3-449
MDD_PA_CONT_ABS_7 ..... 3-442, 3-449
MDD_PA_CONT_ABS_8 ..... 3-442, 3-450
MDD_PA_CONT_ABS_9 ..... 3-443, 3-450
MDD_PA_CONT_ORD_0 ..... 3-443, 3-450
MDD_PA_CONT_ORD_1 ..... 3-443, 3-450
MDD_PA_CONT_ORD_2 ..... 3-443, 3-450
MDD_PA_CONT_ORD_3 ..... 3-443, 3-450
MDD_PA_CONT_ORD_4 ..... 3-443, 3-450
MDD_PA_CONT_ORD_5 ..... 3-443, 3-450
MDD_PA_CONT_ORD_6 ..... 3-443, 3-450
MDD_PA_CONT_ORD_7 ..... 3-443, 3-450
MDD_PA_CONT_ORD_8 ..... 3-443, 3-450
MDD_PA_CONT_ORD_9 ..... 3-443, 3-451
MDD_PA_MINUS_LIM ..... 3-444, 3-451
MDD_PA_PLUS_LIM ..... 3-444, 3-451
MDD_SPIND_MAX_VELO_G26 ..... 3-688
MDD_SPIND_MAX_VELO_LIMS ..... 3-688
MDD_SPIND_MIN_VELO_G25 ..... 3-688
MDD_SYSCLOCK_CYCLE_TIME ..... 3-683
MDD_THREAD_START_ANGLE ..... 3-687
MDD_WORKAREA_LIMIT_MINUS ..... 3-688
MDD_WORKAREA_LIMIT_PLUS ..... 3-689
MDL_POSCTRL_SYSCLOCK_TIME_RATIO .... 3-684
MDLA_DRIVE_INVERTER_CODE ..... 3-684
MDS_CHAN_NAME ..... 3-516
MDSA_AXCONF_MACHAX_NAME_TAB ..... 3-684
MDU_PA_ACTIV_IMMED ..... 3-444, 3-451
MDU_PA_CONT_NUM ..... 3-444, 3-451
MDU_PA_CONT_TYP_0 ..... 3-444, 3-451
MDU_PA_CONT_TYP_1 ..... 3-444, 3-451
MDU_PA_CONT_TYP_2 ..... 3-444, 3-451
MDU_PA_CONT_TYP_3 ..... 3-444, 3-452
MDU_PA_CONT_TYP_4 ..... 3-445, 3-452
MDU_PA_CONT_TYP_5 ..... 3-445, 3-452
MDU_PA_CONT_TYP_6 ..... 3-445, 3-452
MDU_PA_CONT_TYP_7 ..... 3-445, 3-452
MDU_PA_CONT_TYP_8 ..... 3-445, 3-452
MDU_PA_CONT_TYP_9 ..... 3-445, 3-452
MDU_PA_LIM_3DIM ..... 3-445, 3-453
MDU_PA_ORI ..... 3-446, 3-453
MDU_PA_TW ..... 3-446, 3-453
MEAS_PROBE_DELAY_TIME:MD 13220 2-251
MEAS_PROBE_LOW_ACTIVE:MD 13200 2-250
MEAS_TYPE:MD 13210 ..... 2-251
measFctState ..... 3-497, 3-591
measPos1 ..... 3-497, 3-591
measPos2 ..... 3-497, 3-591
measPosDev ..... 3-497, 3-591
measUnit ..... 3-497, 3-591
Measurement results ..... 3-524
Measurement setpoint angle ..... 3-519
Measurement setpoint position ..... 3-519
Measurement type ..... 3-525
Measuring circuit type of direct measuring system ..... 3-622
Measuring circuit type of indirect measuring syste ..... 3-623
Memory used DRAM file system no. 1 ..... 3-473
Memory used DRAM file system no. 2 ..... 3-473
Memory used in SRAM file system ..... 3-473
Message frame type ..... 3-703
Message from the part program ..... 3-554
Message ZK1 drive alarm ..... 3-492, 3-586
MIN_CURV_RADIUS:MD 42471 ..... 2-402
minCycleTimeBrut ..... 3-705, 3-708
minCycleTimeNet ..... 3-705, 3-708
MINFEED:MD 42460 ..... 2-401
Minimum access time to bus ..... 3-697
Minimum diameter of the grinding wheel ..... 3-634
minimum gross cycle time ..... 3-708
Minimum net cycle time ..... 3-708
Minimum position of 1st rotary axis ..... 3-665
Minimum position of 2nd rotary axis ..... 3-665
Minimum spindle speed at G25 ..... 3-688
Minimum width of the grinding wheel ..... 3-635
MINMAX_ADDRESS
MD 1652 ..... 2-138
MD 5652 ..... 2-165
MINMAX_MAX_VALUE
MD 1654 ..... 2-138
MD 5654 ..... 2-165
MINMAX_MIN_VALUE
MD 1653 ..... 2-138
MD 5653 ..... 2-165
MINMAX_SIGNAL_NR
MD 1651 ..... 2-138
MD 5651 ..... 2-165
MINTIME_BETWEEN_STROKES:MD 42404 ..... 2-400
minToolDia ..... 3-634
minToolWide ..... 3-635
MIRROR_REF_AX:MD 10610 ..... 2-224
MIRROR_TOGGLE:MD 10612 ..... 2-224
MIRROR_TOOL_LENGTH:MD 42900 ..... 2-405
MIRROR_TOOL_WEAR:MD 42910 ..... 2-405
mirrorImgActive 3-511, 3-512, 3-513, 3-572, 3-573, 3-611, 3-617
Mirroring ..... 3-573
Mirroring enabled in a settable frame ... 3-512, 3-513, ..... 3-572, 3-611
Mirroring enabled in an active frame ..... 3-511, 3-617
MISC_FUNCTION_MASK:MD 30455 ..... 2-343
MLFB of the NCU module ..... 3-461
MM_ABSBLOCK:MD 28400 ..... 2-336
MM_ABSBLOCK_BUFFER_CONF:MD 28402 ... ..... 2-336
MM_ARCLENGTH_SEGMENTS:MD 28540 ..... 2-337
MM_BUFFERED_AC_MARKER:MD 28257 ..... 2-334
MM_BUFFERED_AC_PARAM:MD 28255 2-333

© Siemens AG 2004 All Rights Reserved

MM_CC_MD_MEM_SIZE:MD 18238 .....2-262
MM_CEC_MAX_POINTS:MD 18342.....2-265
MM_CHAN_HASH_TABLE_SIZE:MD 18250.....
.....2-263
MM_COM_COMPRESS_METHOD:MD 18390 ..
.....2-266
MM_COM_TASK_STACK_SIZE:MD 18502 .....
.....2-267
MM_DIR_HASH_TABLE_SIZE:MD 18300.2-264
MM_DRAM_FILE_MEM_SIZE:MD 18351..2-265
MM_DRIVE_TASK_STACK_SIZE:MD 18520.....
.....2-268
MM_ENABLE_TOOL_ORIENT:MD 18114.2-258
MM_ENC_COMP_MAX_POINTS:MD 38000.....
.....2-393
MM_EXT_PROG_BUFFER_SIZE:MD 18360 .....
.....2-265
MM_EXT_PROG_NUM:MD 18362.....2-265
MM_EXTCOM_TASK_STACK_SIZE:MD 18500
.....2-267
MM_EXTERN_CNC_SYSTEM:MD 10880 .2-231
MM_EXTERN_GCODE_SYSTEM:MD 10881.....
.....2-231
MM_EXTERN_LANGUAGE:MD 18800.....2-270
MM_EXTERN_MAXNUM_OEM_GCODES:MD
10850.....2-231
MM_FEED_PROFILE_SEGMENTS:MD 28535
.....2-336
MM_FILE_HASH_TABLE_SIZE:MD 182902-264
MM_FLASH_FILE_SYSTEM_SIZE:MD 18332 ...
.....2-264
MM_FLASHFILESYS_MEM:MD 18331 .....2-264
MM_FRAME_FINE_TRANS:MD 18600 .....2-268
MM_GUD_VALUES_MEM:MD 18150.....2-259
MM_IPO_BUFFER_SIZE:MD 28060.....2-330
MM_IPO_TASK_STACK_SIZE:MD 18512.2-267
MM_KIND_OF_SUMCORR:MD 18112 .....2-258
MM_LINK_NUM_OF_MODULES:MD 18782 .....
.....2-269
MM_LINK_TOA_UNIT:MD 28085.....2-332
MM_LUD_HASH_TABLE_SIZE:MD 182402-263
MM_LUD_VALUES_MEM:MD 28040.....2-330
MM_MAINTENANCE_MON:MD 18860.....2-270
MM_MAX_AXISPOLY_PER_BLOCK:MD 28520
.....2-336
MM_MAX_CUTTING_EDGE_NO:MD 18105.....
.....2-257
MM_MAX_CUTTING_EDGE_PERTOOL:MD
18106.....2-258
MM_MAX_SIZE_OF_LUD_VALUE:MD 18242 ...
.....2-263
MM_MAX_SUMCORR_PER_CUTTEDGE:MD
18110.....2-258
MM_MAX_TRACE_DATAPOINTS:MD 28180 ....
.....2-332
MM_MAX_TRACE_LINK_POINTS:MD 18790....
.....2-269
MM_MAXNUM_KIN_CHAIN_ELEM:MD 18880 ..
.....2-270
MM_MAXNUM_PROT_AREA_ELEM:MD 18890
.....2-270
MM_NCK_HASH_TABLE_SIZE:MD 182602-263
MM_NCU_LINK_MASK:MD 18780..... 2-269
MM_NUM_AC_MARKER:MD 28256 ..... 2-334
MM_NUM_AC_PARAM:MD 28254..... 2-333
MM_NUM_AC_SYSTEM_MARKER:MD 28276
..... 2-335
MM_NUM_AC_SYSTEM_PARAM:MD 28274.....
..... 2-335
MM_NUM_AC_TIMER:MD 28258 ..... 2-334
MM_NUM_AN_TIMER:MD 18710 ..... 2-269
MM_NUM_BASE_FRAMES:MD 28081..... 2-331
MM_NUM_BLOCKS_IN_PREP:MD 28070 2-331
MM_NUM_CC_BLOCK_ELEMENTS:MD 28090
..... 2-332
MM_NUM_CC_BLOCK_USER_MEM:MD 28100
..... 2-332
MM_NUM_CC_HEAP_MEM:MD 28105.... 2-332
MM_NUM_CC_MAGAZINE_PARAM:MD 18090
..... 2-256
MM_NUM_CC_MAGLOC_PARAM:MD 18092....
..... 2-256
MM_NUM_CC_MON_PARAM:MD 18098 . 2-257
MM_NUM_CC_TDA_PARAM:MD 18094 .. 2-256
MM_NUM_CC_TOA_PARAM:MD 18096.. 2-257
MM_NUM_CCS_MAGAZINE_PARAM:MD
18200..... 2-261
MM_NUM_CCS_MAGLOC_PARAM:MD 18202
..... 2-261
MM_NUM_CCS_MON_PARAM:MD 182082-262
MM_NUM_CCS_TDA_PARAM:MD 18204 2-261
MM_NUM_CCS_TOA_PARAM:MD 18206 2-261
MM_NUM_CURVE_POLYNOMS:MD 18404 .....
..... 2-267
MM_NUM_CURVE_POLYNOMS_DRAM:MD
18410..... 2-267
MM_NUM_CURVE_SEGMENTS:MD 18402 .....
..... 2-266
MM_NUM_CURVE_SEGMENTS_DRAM:MD
18408..... 2-267
MM_NUM_CURVE_TABS:MD 18400 ..... 2-266
MM_NUM_CURVE_TABS_DRAM:MD 18406.....
..... 2-267
MM_NUM_CUTTING_EDGES_IN_TOA:MD
18100..... 2-257
MM_NUM_DIR_IN_FILESYSTEM:MD 18310.....
..... 2-264
MM_NUM_FCTDEF_ELEMENTS:MD 28252.....
..... 2-333
MM_NUM_FILES_IN_FILESYSTEM:MD 18320
..... 2-264
MM_NUM_FILES_PER_DIR:MD 18280.... 2-263
MM_NUM_GLOBAL_BASE_FRAMES:MD
18602..... 2-268
MM_NUM_GLOBAL_USER_FRAMES:MD
18601..... 2-268
MM_NUM_GUD_MODULES:MD 18118.... 2-258
MM_NUM_GUD_NAMES_CHAN:MD 18130 .....
..... 2-259
MM_NUM_GUD_NAMES_NCK:MD 181202-259
MM_NUM_LINKVAR_ELEMENTS:MD 28160 ....
..... 2-332

© Siemens AG 2004 All Rights Reserved

MM_NUM_LUD_NAMES_TOTAL:MD 28020 ..... 2-329
MM_NUM_MAGAZINE:MD 18084 ..... 2-255
MM_NUM_MAGAZINE_LOCATION:MD 18086 ..... 2-256
MM_NUM_MAX_FUNC_NAMES:MD 18170 ..... 2-260
MM_NUM_MAX_FUNC_PARAM:MD 18180 ..... 2-260
MM_NUM_MMC_UNITS:MD 10134 ..... 2-214
MM_NUM_PROTECT_AREA_ACTIVE:MD 28210 ..... 2-333
MM_NUM_PROTECT_AREA_CHAN:MD 28200 ..... 2-333
MM_NUM_PROTECT_AREA_CONTOUR:MD 28212 ..... 2-333
MM_NUM_PROTECT_AREA_NCK:MD 18190 .. ..... 2-261
MM_NUM_R_PARAM:MD 28050 ..... 2-330
MM_NUM_REORG_LUD_MODULES:MD 28010 ..... 2-329
MM_NUM_SUBDIR_PER_DIR:MD 18270 2-263
MM_NUM_SUMCORR:MD 18108 ..... 2-258
MM_NUM_SYNACT_GUD_BOOL:MD 18662 .... ..... 2-268
MM_NUM_SYNACT_GUD_INT:MD 18661 2-268
MM_NUM_SYNACT_GUD_REAL:MD 18660 ..... 2-268
MM_NUM_SYNC_ELEMENTS:MD 28250 2-333
MM_NUM_TOOL:MD 18082 ..... 2-255
MM_NUM_TOOL_ADAPTER:MD 18104 ... 2-257
MM_NUM_TOOL_CARRIER:MD 18088 .... 2-256
MM_NUM_TOOL_ENV:MD 18116 ..... 2-258
MM_NUM_USER_FRAMES:MD 28080 ..... 2-331
MM_NUM_USER_MACROS:MD 18160 .... 2-260
MM_NUM_VDIVAR_ELEMENTS:MD 28150 ..... 2-332
MM_ORIPATH_CONFIG:MD 28580 ..... 2-337
MM_PATH_VELO_SEGMENTS:MD 28530 ..... 2-336
MM_PLC_TASK_STACK_SIZE:MD 18540 2-268
MM_PREP_TASK_STACK_SIZE:MD 28500 ..... 2-336
MM_PROTOC_FILE_BUFFER_SIZE:MD 18374 ..... 2-266
MM_PROTOC_NUM_ETP_OEM_TYP:MD 28301 ..... 2-335
MM_PROTOC_NUM_ETP_STD_TYP:MD 28302 ..... 2-335
MM_PROTOC_NUM_ETPD_OEM_LIST:MD 18372 ..... 2-266
MM_PROTOC_NUM_ETPD_STD_LIST:MD 18371 ..... 2-266
MM_PROTOC_NUM_FILES:MD 18370 ..... 2-265
MM_PROTOC_NUM_SERVO_DATA:MD 18373 ..... 2-266
MM_PROTOC_SESS_ENAB_USER:MD 18375 ..... 2-266
MM_PROTOC_USER_ACTIVE:MD 28300 2-335
MM_QEC_MAX_POINTS:MD 38010 ..... 2-393
MM_REORG_LOG_FILE_MEM:MD 28000 ..... 2-329
MM_SEARCH_RUN_RESTORE_MODE:MD 28560 ..... 2-337
MM_SERVO_FIFO_SIZE:MD 18720 ..... 2-269
MM_SERVO_TASK_STACK_SIZE:MD 18510 ... ..... 2-267
MM_SHAPED_TOOLS_ENABLE:MD 28290 ..... ..... 2-335
MM_SIZEOF_LINKVAR_DATA:MD 18700 2-269
MM_SYSTEM_DATAFRAME_MASK:MD 28083 ..... 2-331
MM_SYSTEM_FRAME_MASK:MD 28082 2-331
MM_TOOL_DATA_CHG_BUFF_SIZE:MD 28450 ..... 2-336
MM_TOOL_MANAGEMENT_MASK:MD 18080 ..... 2-255
MM_TRACE_DATA_FUNCTION:MD 22714 ..... ..... 2-305
MM_TRACE_LINK_DATA_FUNCTION:MD 18792 ..... 2-269
MM_TRACE_VDI_SIGNAL:MD 18794 ..... 2-270
MM_TYPE_CC_MAGAZINE_PARAM:MD 18091 ..... 2-256
MM_TYPE_CC_MAGLOC_PARAM:MD 18093 .. ..... 2-256
MM_TYPE_CC_MON_PARAM:MD 18099 2-257
MM_TYPE_CC_TDA_PARAM:MD 18095 . 2-256
MM_TYPE_CC_TOA_PARAM:MD 18097 . 2-257
MM_TYPE_CCS_MAGAZINE_PARAM:MD 18201 ..... 2-261
MM_TYPE_CCS_MAGLOC_PARAM:MD 18203 ..... 2-261
MM_TYPE_CCS_MON_PARAM:MD 18209 ..... ..... 2-262
MM_TYPE_CCS_TDA_PARAM:MD 182052-261
MM_TYPE_CCS_TOA_PARAM:MD 18207 ..... ..... 2-262
MM_TYPE_OF_CUTTING_EDGE:MD 18102 ..... ..... 2-257
MM_USER_FILE_MEM_MINIMUM:MD 18350 ... ..... 2-265
MM_USER_MEM_BUFFERED:MD 18230 2-262
MM_USER_MEM_DPR:MD 18220 ..... 2-262
MM_USER_MEM_DYNAMIC:MD 18210 ... 2-262
MMC_CMD_TIMEOUT:MD 10132 ..... 2-214
MMC_INFO_CUT_SPEED:MD 27206 ..... 2-327
MMC_INFO_CUT_SPEED_STATUS:MD 27207 ..... 2-327
MMC_INFO_NO_UNIT:MD 27200 ..... 2-326
MMC_INFO_NO_UNIT_STATUS:MD 27201 ..... ..... 2-327
MMC_INFO_POSN_LIN:MD 27202 ..... 2-327
MMC_INFO_POSN_LIN_STATUS:MD 27203 .... ..... 2-327
MMC_INFO_REV_FEED:MD 27208 ..... 2-328
MMC_INFO_REV_FEED_STATUS:MD 27209 ... ..... 2-328
MMC_INFO_VELO_LIN:MD 27204 ..... 2-327
MMC_INFO_VELO_LIN_STATUS:MD 27205 ..... ..... 2-327

© Siemens AG 2004 All Rights Reserved

mmcCmd ....3-436
mmcCmdPrep ....3-437
mmcCmdPrepCounter....3-461
mmcCmdQuit ....3-437
mmcCmdQuitPrep ....3-437
Mode according to $AC_SMODE ..... 3-505, 3-508, ..... 3-607, 3-613
Mode group ready....3-515
MODE_AC_FIFO:MD 28266....2-334
modeSpindleToolRevolver....3-430
MODESWITCH_MASK:MD 20114 ....2-275
modeWearGroup ....3-637
Modification counter for $$driveType ....3-460
Modification counter for ACC information ....3-694
Modification counter for dimension system ....3-471
Modification counter for magazine data ....3-545
Modification counter for new CP configs.....3-698
Modification counter for stop run ....3-544
Modification counter for tool offsets....3-545
Modification counter for upload buffer ....3-551
Module identifier ....3-683
MODULO_RANGE:MD 30330....2-342
MODULO_RANGE_START:MD 30340....2-342
MONITOR_ADDRESS
MD 1656 ....2-138
MD 5656 ....2-165
MONITOR_ADDRESS:MD 11380 ....2-238
MONITOR_CYCLE_TIME
MD 1002 ....2-84
MD 5002 ....2-154
MONITOR_DISPLAY
MD 1657 ....2-138
MD 5657 ....2-165
MONITOR_DISPLAY_INT:MD 11382 ....2-239
MONITOR_DISPLAY_REAL:MD 11384....2-239
MONITOR_INPUT_INT:MD 11386....2-239
MONITOR_INPUT_REAL:MD 11388 ....2-239
MONITOR_INPUT_STROBE
MD 1659 ....2-139
MD 5659 ....2-165
MONITOR_INPUT_STROBE:MD 11390....2-239
MONITOR_INPUT_VALUE
MD 1658 ....2-139
MD 5658 ....2-165
MONITOR_SEGMENT
MD 1655 ....2-138
MD 5655 ....2-165
Monitoring data per tool edge....3-631
motEnd....3-606
Motion end criterion for single-axis interpolation.3-606
Motor temperature ..... 3-620, 3-623
Motor temperature warning..... 3-494, 3-588
Motor wiring selection (star/delta)..... 3-493, 3-587
MOTOR_CODE
MD 1102 ....2-91
MOTOR_FIXED_TEMPERATURE
MD 1608 ....2-134
MOTOR_INERTIA
MD 1117 ....2-94
MOTOR_LIMIT_CURRENT
MD 1122 ....2-95
MOTOR_MAX_ALLOWED_SPEED
MD 1146 .... 2-98
MOTOR_MAX_CURRENT
MD 1104 .... 2-92
MOTOR_MAX_CURRENT_REDUCTION
MD 1105 .... 2-92
MOTOR_MAX_SPEED
MD 1401 .... 2-119
MOTOR_MAX_SPEED_SETUP
MD 1420 .... 2-124
MOTOR_NOLOAD_CURRENT
MD 1136 .... 2-97
MOTOR_NOLOAD_VOLTAGE
MD 1135 .... 2-97
MOTOR_NOMINAL_CURRENT
MD 1103 .... 2-92
MOTOR_NOMINAL_FREQUENCY
MD 1134 .... 2-96
MOTOR_NOMINAL_POWER
MD 1130 .... 2-96
MOTOR_NOMINAL_VOLTAGE
MD 1132 .... 2-96
MOTOR_RATED_SPEED
MD 1400 .... 2-119
MOTOR_SPEED_LIMIT
MD 1405 .... 2-120
MOTOR_STANDSTILL_CURRENT
MD 1118 .... 2-94
MOTOR_SWITCH_SPEED1
MD 1247 .... 2-110
MOTOR_SWITCH_SPEED2
MD 1248 .... 2-110
MOTOR_TEMP_ALARM_TIME
MD 1603 .... 2-133
MOTOR_TEMP_SHUTDOWN_LIMIT
MD 1607 .... 2-133
MOTOR_TEMP_WARN_LIMIT
MD 1602 .... 2-132
MOTOR_TEMPERATURE
MD 1702 .... 2-140
motorTemperature .....3-620, 3-623
MS_ASSIGN_MASTER_SPEED_CMD:MD 37250 .... 2-389
MS_ASSIGN_MASTER_TORQUE_CTR:MD 37252 .... 2-389
MS_COUPLING_ALWAYS_ACTIVE:MD 37262 .... 2-390
MS_FUNCTION_MASK:MD 37253 ..... 2-389
MS_MAX_CTRL_VELO:MD 37260 ..... 2-390
MS_MOTION_DIR_REVERSE:MD 37274 2-391
MS_SPIND_COUPLING_MODE:MD 37263 ..... .... 2-390
MS_TENSION_TORQ_FILTER_TIME:MD 37266 .... 2-391
MS_TENSION_TORQUE:MD 37264..... 2-390
MS_TORQUE_CTRL_ACTIVATION:MD 37255 .... 2-390
MS_TORQUE_CTRL_I_TIME:MD 37258.. 2-390
MS_TORQUE_CTRL_MODE:MD 37254... 2-390
MS_TORQUE_CTRL_P_GAIN:MD 37256 2-390
MS_TORQUE_WEIGHT_SLAVE:MD 37268..... .... 2-391
MS_VELO_TOL_COARSE:MD 37270 ..... 2-391
MS_VELO_TOL_FINE:MD 37272..... 2-391

© Siemens AG 2004 All Rights Reserved

msg....3-554
MULTFEED_ASSIGN_FASTIN:MD 21220 2-294
MULTFEED_STORE_MASK:MD 21230 ....2-294
multiPlace....3-644
Mval....3-565

## N

name...3-481, 3-506, 3-509, 3-575, 3-599, 3-608, 3-614
Name of physical spindle.... 3-506, 3-608
namePhys....3-506, 3-509, 3-608, 3-614
NC in stop state....3-543
NC_LANGUAGE_CONFIGURATION:MD 10711 ....2-227
NC_PROPERTIES
MD 9500 ....2-184
NC_USER_CODE_CONF_NAME_TAB:MD 10712....2-227
NC_USER_EXTERN_GCODES_TAB:MD 10882....2-231
NCBFRAME_POWERON_MASK:MD 10615..... ....2-224
NCBFRAME_RESET_MASK:MD 10613....2-224
ncFkt....3-568
ncFktAct....3-568
ncFktBin....3-568
ncFktBinAct....3-568
ncFktBinFanuc....3-568
ncFktBinS....3-568
ncFktFanuc....3-569
ncFktS....3-569
NCK alarm pending....3-534
NCK compiler switch....3-705
NCK flag for the SI programmable logic....3-469
NCK logbook....3-430
NCK sign-of-life....3-462
NCK timer....3-457
NCK timer variable for the SI programmable logic..... ....3-470
NCK type....3-430
NCK version....3-430
NCK_LEAD_FUNCTION_MASK:MD 11750 ..... ....2-242
NCK_PCOS_TIME_RATIO:MD 10185.....2-215
NCK_TRAIL_FUNCTION_MASK:MD 11752..... ....2-242
nckAliveAndWell....3-462
nckCompileSwitches....3-705
nckLogbookSeekPos....3-430
nckType....3-430
nckVersion....3-430
NCSC system time....3-471
ncStartCounter....3-537
NCU link active....3-462
NCU power class....3-430
NCU_LINK_CONNECTIONS:MD 18781....2-269
NCU_LINKNO:MD 12510....2-245
ncuLinkActive....3-462
ncuPerformanceClass....3-430
NEG_DRIVE_SPEED_LIMIT
MD 5441....2-161
NEG_DUAL_GAIN_COMP_FLOW
MD 5467....2-162
NEG_DUAL_GAIN_COMP_S_FLOW
MD 5487....2-162
NEG_DUAL_GAIN_COMP_S_VOLT
MD 5488....2-162
NEG_DUAL_GAIN_COMP_VOLTAGE
MD 5468....2-162
NEG_DUAL_GAIN_COMP_Z_FLOW
MD 5483....2-162
NEG_DUAL_GAIN_COMP_Z_VOLT
MD 5484....2-162
nettoMemFfs....3-462
NIBBLE_PRE_START_TIME:MD 26018... 2-326
NIBBLE_PUNCH_CODE:MD 26008..... 2-325
NIBBLE_PUNCH_INMASK:MD 26006..... 2-325
NIBBLE_PUNCH_OUTMASK:MD 26004.. 2-325
NIBBLE_SIGNAL_CHECK:MD 26020..... 2-326
NIBPUNCH_PRE_START_TIME:MD 42402..... ....2-400
No of par. of the mag. user data f tool mag. place..... ....3-432
No of par. of the mag. user data for a tool mag. 3-433
No. of active tool for flat D-no. max 8 digits..... 3-530
No. of multiple assignments of a magazine location..... ....3-433
No. of P elements of a cutting edge in module TUE..... ....3-431
No. of param. in the user monitoring data..... 3-431
No. prog. transformation data record block search..... ....3-535
No. progr. tool for flat D-no. with max. 8 digits... 3-539
No. total offset params per total offset set..... 3-433
No.of directories that have already been created..... ....3-473
NO_TRANSMISSION_BITS
MD 1028....2-88
MD 5028....2-155
NO_TRANSMISSION_BITS_DM
MD 1041....2-89
Non-licensed options....3-474
NORMAL_VECTOR_NAME_TAB:MD 10630..... ....2-225
Normalized path parameter....3-526
nrDuplo....3-646
nth data in list
area....3-710
col....3-710
row....3-710
type....3-710
unit....3-710
NUM_AC_FIFO:MD 28260....2-334
NUM_AX_SEL
MD 9027....2-170
NUM_CURRENT_FILTERS
MD 1200....2-102
NUM_EG:MD 11660....2-242
NUM_ENCS:MD 30200....2-340
NUM_FFW_FCTRL_FILTERS
MD 5260....2-159
NUM_OUTPUT_FILTERS

© Siemens AG 2004 All Rights Reserved

MD 5280 ....2-159
NUM_OUTPUT_VCTRL_FILTERS
MD 5200 ....2-157
NUM_POLE_PAIRS
MD 1112 ....2-93
NUM_SPEED_FILTERS
MD 1500 ....2-126
MD 5500 ....2-163
numActAxes....3-437
numActDEdges ....3-661
numActMags ....3-638
numAlarms ....3-462
numAnalogInp ....3-430
numAnalogOutp ....3-430
numAuxAxes....3-437
numBAGs ....3-430
numBasisFrames.... 3-431, 3-437
Number NC instruction groups (ISO Dialect)....3-432
Number of active auxiliary functions( H-functions) ....
....3-565
Number of active channels ....3-431
Number of active drives....3-432
Number of active E-function....3-564
Number of active machine axes ....3-432
Number of active S-functions ....3-565
Number of active tool ....3-530
Number of active tool edge ....3-527
Number of active wear group ....3-641
Number of assigned handwheel 3-496, 3-590, 3-606
Number of auxiliary axes ....3-437
Number of available mode groups ....3-430
Number of available tool carriers ....3-540
Number of axes in channel. ....3-437
Number of axis containers ....3-431
Number of axis entries ....3-695
Number of basic frames in channel....3-437
Number of bus access errors type 1 ....3-697
Number of bus access errors type 2 ....3-697
Number of bus cycles....3-697
Number of bytes log file undersized ....3-715
Number of channel-independent basic frames ...3-431
Number of channel-independent user frames ....3-434
Number of channel-specific R parameters....3-438
Number of clients....3-698
Number of configured slaves....3-699
Number of current transformer data record....3-530
Number of cutting edges.... 3-627, 3-646
Number of D numbers in module....3-661
Number of data in the list....3-710
Number of defined locations for the control block ....
....3-637
Number of directories that can be created ....3-460
Number of DP buses....3-696
Number of entries Fifo buffer undersized....3-715
Number of events to be skipped ....3-715
Number of Fanuc-G functions ....3-514
Number of files that can be created ....3-460
Number of files that have already been created .3-473
Number of G functions (GroupID)....3-454
Number of G functions (Gruppe_NUM) ....3-454
Number of geometry axes....3-437
Number of highest channel axis. ....3-437
Number of HW analog inputs .... 3-430
Number of HW analog output .... 3-456
Number of HW analog outputs .... 3-430
Number of HW digital inputs.... 3-432
Number of HW digital outputs.... 3-432
Number of internal buffer magazine .... 3-637
Number of log. spindles .... 3-438
Number of M function for tool change.... 3-434
Number of magazines .... 3-638
Number of masters.... 3-703
Number of NC instruction groups.... 3-432
Number of occurrences of event.... 3-714
Number of orientation axes in channel .... 3-438
Number of P elements of a cutting edge.... 3-431
Number of P elements of a tool .... 3-434
Number of P elements of a tool edge in module TS ....
.... 3-431
Number of parameter set .... 3-497, 3-591
Number of parameters in $$toolHolderData .... 3-433
Number of parameters of a multiple assignment 3-433
Number of parameters per adapter .... 3-433
Number of parameters per magazine location ... 3-433
Number of pending general alarms .... 3-462
Number of polygon elements / protection zone.. 3-437
Number of programmed tool.... 3-539
Number of real locations in the magazine .... 3-640
Number of Siemens applic. cutting edge data ... 3-431
Number of Siemens applic. magazine location data....
.... 3-432
Number of Siemens applic. monitoring data.... 3-431
Number of Siemens application magazine data. 3-432
Number of Siemens application tool data.... 3-434
Number of slaves connected to bus .... 3-698
Number of slots .... 3-702
Number of slots per axis container.... 3-431
Number of special workpieces (user-defined).... 3-542
Number of spindles .... 3-438
Number of strokes.... 3-570
Number of synchronous actions .... 3-565, 3-567
Number of T area.... 3-439
Number of T areas .... 3-433
Number of the active M-function .... 3-565
Number of the actual drive parameter set .... 3-492,
.... 3-586
Number of the geometry axis .... 3-606
Number of the internal load magazine .... 3-636
Number of the magazine.... 3-638, 3-640
Number of the preselected T-function.... 3-565
Number of tool edges .... 3-438
Number of tool holders in the TOA of the channel ....
.... 3-538
Number of toolholder.... 3-533
Number of tools in the area TO.... 3-646
Number of user frames .... 3-438
Number of valid contour elements.... 3-444, 3-451
Number of workpieces machined in current run. 3-530
numChannels .... 3-431
numContainer.... 3-431
numContainerSlots.... 3-431
numContourInProtArea.... 3-437
numCuttEdgeParams .... 3-431
numCuttEdgeParams_tao.... 3-431

© Siemens AG 2004 All Rights Reserved

numCuttEdgeParams_tas....3-431
numCuttEdgeParams_ts ....3-431
numCuttEdgeParams_tu ....3-431
numCuttEdgeParams_tus....3-431
numCuttEdges .... 3-627, 3-646
numData....3-710
numDigitInp....3-432
numDigitOutp ....3-432
numDrives ....3-432
numElementsFastFifoTooSmall....3-715
numFilesPerDir....3-462
numGCodeGroups....3-432
numGCodeGroupsFanuc....3-432
numGeoAxes ....3-437
numGlobMachAxes....3-432
numHandWheels ....3-432
numMachAxes ....3-437
numMagLocParams_tap....3-432
numMagLocParams_u ....3-432
numMagParams_tam....3-432
numMagParams_u ....3-433
numMagPlaceParams ....3-433
numMagPlacesMax ....3-433
numMagsMax....3-433
numOriAxes ....3-438
numParams_Adapt ....3-433
numParams_SC ....3-433
numPlaceMulti....3-433
numPlaceMultiParams ....3-433
numProtArea....3-438
numRParams ....3-438
numSpindles ....3-438
numSpindlesLog....3-438
numStrokes....3-570
numSubDirsPerDir ....3-462
numSynAct .... 3-565, 3-567
numToBaust ....3-433
numToolEdges ....3-438
numToolHolderParams....3-433
numToolHolders ....3-538
numToolParams_tad....3-434
numToolParams_tu....3-434
numTools....3-646
numTraceProtocDataList....3-462
numTraceProtocEventType ....3-538
numTraceProtocOemDataList....3-463
numTraceProtocOemEventType ....3-538
numUserFrames.... 3-434, 3-438
NUTATION_ANGLE_NAME:MD 10648 .....2-225

## O

Odinate arc centre of 3rd contour element.....3-448
Odinate end point of 3rd contour element.....3-450
OEM text for logging buffer ....3-438
oemProtText ....3-438
Offset Hirth tooth system 1st axis ....3-665
Offset Hirth tooth system 2nd axis ....3-665
Offset memory number length (Fanuc)....3-528
Offset memory number radius (ISO Dialect)) .....3-527
Offset normal.... 3-539
Offset of 1st rotary axis in degrees.... 3-665
Offset of 2nd rotary axis in degrees.... 3-665
Offset to leading axis/spindle, actual value..... 3-490, .... 3-584
OFFSET_COMPENSATION
MD 5470 .... 2-162
OFFSETVALUE_FOR_MONITORING:MD 31510 .... 2-347
ONLINE_CUTCOM_ENABLE:MD 20254 .. 2-281
Operating mode ....3-621, 3-623
OPERATING_MODE
MD 1730 .... 2-145
MD 5730 .... 2-167
OPERATING_MODE_DEFAULT:MD 10720 ..... .... 2-228
operatingMode....3-621, 3-623
operatingTime .... 3-709
opMode .....3-507, 3-509, 3-515, 3-609, 3-614
OPT_LOAD_ANGEL
MD 1128 .... 2-96
optAssStopActive.... 3-548
optStopActive .... 3-548
Ordinal number of an alarm.....3-475, 3-477, 3-479
Ordinate arc centre of 10th contour element .... 3-442, .... 3-449
Ordinate arc centre of 1st contour element ..... 3-441, .... 3-448
Ordinate arc centre of 2nd contour element ..... 3-441, .... 3-448
Ordinate arc centre of 3rd contour element..... 3-441
Ordinate arc centre of 4th contour element ..... 3-441, .... 3-448
Ordinate arc centre of 5th contour element ..... 3-441, .... 3-448
Ordinate arc centre of 6th contour element ..... 3-441, .... 3-448
Ordinate arc centre of 7th contour element ..... 3-441, .... 3-448
Ordinate arc centre of 8th contour element ..... 3-441, .... 3-449
Ordinate arc centre of 9th contour element ..... 3-442, .... 3-449
Ordinate end point of 10th contour element ..... 3-443, .... 3-451
Ordinate end point of 1st contour element ..... 3-443, .... 3-450
Ordinate end point of 2nd contour element ..... 3-443, .... 3-450
Ordinate end point of 4th contour element ..... 3-443, .... 3-450
Ordinate end point of 5th contour element ..... 3-443, .... 3-450
Ordinate end point of 6th contour element ..... 3-443, .... 3-450
Ordinate end point of 7th contour element ..... 3-443, .... 3-450
Ordinate end point of 8th contour element ..... 3-443, .... 3-450
Ordinate end point of 9th contour element ..... 3-443, .... 3-450
Ordinate of end point of 3rd contour element .... 3-443

© Siemens AG 2004 All Rights Reserved

ORI_DEF_WITH_G_CODE:MD 21102 .....2-291
ORI_IPO_WITH_G_CODE:MD 21104 .....2-291
ORI_JOG_MODE:MD 42660 .....2-404
ORIAX_TURN_TAB_1:MD 21120 .....2-291
ORIAX_TURN_TAB_2:MD 21130 .....2-291
Orientation reference system .....3-541
ORIENTATION_IS_EULER:MD 21100 .....2-290
ORIENTATION_NAME_TAB:MD 10646 ....2-225
ORIPATH_MODE:MD 21094 .....2-290
ORIPATH_SMOOTH_DIST:MD 42670 .....2-404
ORIPATH_SMOOTH_TOL:MD 42672.....2-405
OSCILL_CTRL_MASK:MD 43770 .....2-412
OSCILL_DWELL_TIME1:MD 43720.....2-411
OSCILL_DWELL_TIME2:MD 43730.....2-411
OSCILL_END_POS:MD 43760.....2-412
OSCILL_IS_ACTIVE:MD 43780 .....2-412
OSCILL_MODE_MASK:MD 11460.....2-240
OSCILL_NUM_SPARK_CYCLES:MD 43750.....
.....2-411
OSCILL_REVERSE_POS1:MD 43700.....2-411
OSCILL_REVERSE_POS2:MD 43710.....2-411
OSCILL_START_POS:MD 43790 .....2-412
OSCILL_VELO:MD 43740 .....2-411
Oscillation interrupt position 1 ..... 3-487, 3-581
Oscillation interrupt position 2 ..... 3-487, 3-581
Other counter for _N_COMPLETE_DOC_ACX ..3-459
Other counter for _N_COMPLETE_DOT_ACX ..3-459
Other counter for _N_COMPLETE_DPC_ACX ..3-459
OUT data byte.....3-457
OUT data double word .....3-457
OUT data word.....3-458
OUT Real data .....3-458
OUTPUT_ENABLE_DELAY
MD 5531 .....2-163
OUTPUT_FIL_1_BW
MD 5289 .....2-160
OUTPUT_FIL_1_BW_NUM
MD 5290 .....2-160
OUTPUT_FIL_1_DAMP
MD 5285 .....2-159
OUTPUT_FIL_1_FREQ
MD 5284 .....2-159
OUTPUT_FIL_1_SUP_FREQ
MD 5288 .....2-160
OUTPUT_FILTER_TYPE
MD 5281 .....2-159
OUTPUT_VCTRL_FIL_1_BW
MD 5211 .....2-158
OUTPUT_VCTRL_FIL_1_BW_NUM
MD 5212 .....2-158
OUTPUT_VCTRL_FIL_1_DAMP
MD 5203 .....2-157
OUTPUT_VCTRL_FIL_1_FREQ
MD 5202 .....2-157
OUTPUT_VCTRL_FIL_1_SUP_FREQ
MD 5210 .....2-157
OUTPUT_VCTRL_FIL_2_BW
MD 5214 .....2-158
OUTPUT_VCTRL_FIL_2_BW_NUM
MD 5215 .....2-158
OUTPUT_VCTRL_FIL_2_DAMP
MD 5205 .....2-157
OUTPUT_VCTRL_FIL_2_FREQ
MD 5204 ..... 2-157
OUTPUT_VCTRL_FIL_2_SUP_FREQ
MD 5213 ..... 2-158
OUTPUT_VCTRL_FILTER_CONFIG
MD 5201 ..... 2-157
OUTPUT_VOLTAGE_INVERSION
MD 5476 ..... 2-162
OUTPUT_VOLTAGE_NEG_LIMIT
MD 5475 ..... 2-162
OUTPUT_VOLTAGE_POS_LIMIT
MD 5474 ..... 2-162
Overall total jerk of an axis ..... 3-579
Overall total of jerk of an axis ..... 3-485
OVR_AX_IS_GRAY_CODE:MD 12000 ..... 2-243
OVR_FACTOR_AX_SPEED:MD 12010 .... 2-243
OVR_FACTOR_FEEDRATE:MD 12030.... 2-243
OVR_FACTOR_LIMIT_BIN:MD 12100..... 2-244
OVR_FACTOR_RAPID_TRA:MD 12050... 2-243
OVR_FACTOR_SPIND_SPEED:MD 12070.....
..... 2-244
OVR_FEED_IS_GRAY_CODE:MD 12020 2-243
OVR_FUNCTION_MASK:MD 12090 ..... 2-244
OVR_RAPID_IS_GRAY_CODE:MD 120402-243
OVR_REFERENCE_IS_MIN_FEED:MD 12082
..... 2-244
OVR_REFERENCE_IS_PROG_FEED:MD
12080 ..... 2-244
OVR_SPIND_IS_GRAY_CODE:MD 12060.....
..... 2-243
Owner magazine location of the tool ..... 3-628
Owner magazine of the tool ..... 3-628

## P

PA_ZOA_MODE
MD 9459..... 2-184
paAccLimA..... 3-538
paJerkLimA..... 3-538
Parameter 1 of the alarm .....3-476, 3-478, 3-480
Parameter 2 of the alarm .....3-476, 3-478, 3-480
Parameter 3 of the alarm .....3-476, 3-478, 3-480
Parameter 4 of the alarm .....3-476, 3-478, 3-480
Parameterizing data for module TAD ..... 3-648
Parameterizing data for module TAO ..... 3-648
Parameterizing data for module TAS..... 3-648
Parameterizing data for module TD..... 3-649
Parameterizing data for module TO ..... 3-649
Parameterizing data for module TS..... 3-649
Parameterizing data for module TU..... 3-650
Parameterizing data for module TUE ..... 3-650
Parameterizing data for module TUS ..... 3-650
Parameterizing mask for module TAD ..... 3-651
Parameterizing mask for module TAO..... 3-651
Parameterizing mask for module TAS ..... 3-652
Parameterizing mask for module TD ..... 3-652
Parameterizing mask for module TO ..... 3-653
Parameterizing mask for module TS ..... 3-653
Parameterizing mask for module TU ..... 3-654
Parameterizing mask for module TUE ..... 3-654
Parameterizing mask for module TUS ..... 3-655
Parameterizing the module TD (identifier)..... 3-649

© Siemens AG 2004 All Rights Reserved

paramNrCCV ....3-635
PARAMSET_CHANGE_ENABLE:MD 35590.....
....2-365
paramSetNo.... 3-497, 3-591
parDataTAD....3-648
parDataTAO....3-648
parDataTAS....3-648
parDataTD....3-649
parDataTO....3-649
parDataToolIdentTD ....3-649
parDataTS ....3-649
parDataTU ....3-650
parDataTUE....3-650
parDataTUS....3-650
Parking axis .... 3-494, 3-588
parMasksTAD ....3-651
parMasksTAO ....3-651
parMasksTAS....3-652
parMasksTD ....3-652
parMasksTO ....3-653
parMasksTS....3-653
parMasksTU ....3-654
parMasksTUE ....3-654
parMasksTUS ....3-655
Part of $$absoluteBlockBufferName ....3-551
PART_COUNTER:MD 27880 ....2-328
PART_COUNTER_MCODE:MD 27882 ....2-328
partDistance....3-570
Partner channel NCU, block search waits....3-542
Path for ACC files in the NCK file system ....3-695
Path from beginning of the block in the BCS....3-526
Path override for synchronous actions ....3-526
Path to the end of the block in the BCS....3-526
Path veloc. in basic coordinate system....3-531
Path velocity in the WCS ....3-531
PATH_IPO_IS_ON_TCP:MD 20260....2-281
PATH_TRANS_JERK_LIM:MD 32432 ....2-351
paVeloLimA ....3-538
PBL_VERSION
MD 1797 ....2-147
MD 5797 ....2-167
pblVersion.... 3-621, 3-623
pcmciaDataShotAct ....3-705
pcmciaDataShotSum ....3-705
pcmciaFfsLength ....3-705
pcmciaShotStatus....3-706
pcmciaStartFfsOffset....3-706
pcmciaStartShotOffset ....3-706
pEgBc ....3-538
PEMSD_MODE_ENABLE
MD 1015 ....2-86
PERMANENT_FEED:MD 12202 ....2-244
PERMANENT_ROT_AX_FEED:MD 122042-244
PERMANENT_SPINDLE_FEED:MD 12205.....
....2-245
PERMISSIVE_FLASH_TAB:MD 11700....2-242
PFRAME_RESET_MODE:MD 24010....2-307
Physical spindle name.... 3-509, 3-614
PILOT_OPERATION_PRESSURE
MD 5102 ....2-155
PIN for licensing ....3-471
PIPE_INNER_DIAMETER_A_B
MD 5143 .... 2-156
PIPE_LENGTH_A
MD 5141 .... 2-156
PIPE_LENGTH_B
MD 5142 .... 2-156
PISTON_POS_MIN_NAT_FREQ
MD 5160 .... 2-157
PISTON_ROD_A_DIAMETER
MD 5132 .... 2-156
PISTON_ROD_B_DIAMETER
MD 5133 .... 2-156
PISTON_STROKE
MD 5134 .... 2-156
PISTON_ZERO
MD 5040 .... 2-155
placeData.... 3-643
placeType .... 3-645
Plane assignment of protection zone.... 3-446, 3-453
Plane setting .... 3-522
PLC messages (DB2).... 4-727
PLC override for motion-synchronous actions .. 3-487,
.... 3-581
PLC override for synchronized actions .... 3-526
PLC_ALARM_PICTURE
MD 9055.... 2-171
PLC_ANA_IN_LOGIC_ADDRESS:MD 12978.....
.... 2-248
PLC_ANA_IN_NUM:MD 12979.... 2-248
PLC_ANA_OUT_LOGIC_ADDRESS:MD 12982
.... 2-248
PLC_ANA_OUT_NUM:MD 12983.... 2-248
PLC_CYCLE_TIME:MD 10075 .... 2-210
PLC_CYCLE_TIME_AVERAGE:MD 101102-213
PLC_CYCLIC_TIMEOUT:MD 10100 .... 2-213
PLC_DIG_IN_LOGIC_ADDRESS:MD 12970.....
.... 2-247
PLC_DIG_IN_NUM:MD 12971.... 2-248
PLC_DIG_OUT_LOGIC_ADDRESS:MD 12974
.... 2-248
PLC_DIG_OUT_NUM:MD 12975.... 2-248
PLC_HOTKEY
MD 9017.... 2-170
PLC_IPO_TIME_RATIO:MD 10074.... 2-210
PLC_OB1_TRACE_DEPTH:MD 11480.... 2-240
PLC_OB35_TRACE_DEPTH:MD 11481... 2-241
PLC_OB40_TRACE_DEPTH:MD 11482... 2-241
PLC_RUNNINGUP_TIMEOUT:MD 10120. 2-213
PLC_SYMBOL_FILTER
MD 9054.... 2-171
PLC_SYMBOL_SORT
MD 9053.... 2-171
PLCIO_IN_UPDATE_TIME:MD 10398.... 2-221
PLCIO_LOGIC_ADDRESS_IN:MD 10395 2-221
PLCIO_LOGIC_ADDRESS_OUT:MD 10397 .. 2-
221
PLCIO_NUM_BYTES_IN:MD 10394 .... 2-220
PLCIO_NUM_BYTES_OUT:MD 10396.... 2-221
PLCIO_TYPE_REPRESENTATION:MD 10399
.... 2-221
plcStartReason.... 3-559, 3-562
pMthSDC .... 3-538
PO_WITHOUT_POLY:MD 10674 .... 2-226

© Siemens AG 2004 All Rights Reserved

pOffn ..... 3-539
POLE_ORI_MODE:MD 21108 ..... 2-291
POLE_PAIR_PITCH
MD 1170 ..... 2-100
Pos. offset of the synchr. spindle desired value. 3-483, 3-577
POS_AX_VELO:MD 32060 ..... 2-348
POS_DRIVE_SPEED_LIMIT
MD 5440 ..... 2-161
POS_DUAL_GAIN_COMP_FLOW
MD 5464 ..... 2-161
POS_DUAL_GAIN_COMP_S_FLOW
MD 5485 ..... 2-162
POS_DUAL_GAIN_COMP_S_VOLT
MD 5486 ..... 2-162
POS_DUAL_GAIN_COMP_VOLTAGE
MD 5465 ..... 2-161
POS_DUAL_GAIN_COMP_Z_FLOW
MD 5480 ..... 2-162
POS_DUAL_GAIN_COMP_Z_VOLT
MD 5481 ..... 2-162
POS_LIMIT_MINUS:MD 36100 ..... 2-367
POS_LIMIT_MINUS2:MD 36120 ..... 2-367
POS_LIMIT_PLUS:MD 36110 ..... 2-367
POS_LIMIT_PLUS2:MD 36130 ..... 2-367
POS_TAB_SCALING_SYSTEM:MD 10270 ..... 2-216
POSCTRL_CONFIG:MD 32230 ..... 2-350
POSCTRL_CYCLE_DELAY:MD 10062 ..... 2-209
POSCTRL_CYCLE_TIME:MD 10061 ..... 2-209
POSCTRL_DAMPING:MD 32950 ..... 2-357
POSCTRL_DESVAL_DELAY:MD 10065 ... 2-209
POSCTRL_DESVAL_DELAY_INFO:MD 32990 ..... 2-357
POSCTRL_GAIN:MD 32200 ..... 2-349
POSCTRL_INTEGR_ENABLE:MD 32220 . 2-350
POSCTRL_INTEGR_TIME:MD 32210 ..... 2-349
POSCTRL_OUT_FILTER_ENABLE:MD 32930 ..... 2-356
POSCTRL_OUT_FILTER_TIME:MD 32940 ..... 2-357
POSCTRL_SYSCLOCK_TIME_RATIO:MD 10060 ..... 2-209
Position as diameter or radius ..... 3-605
Position component X ..... 3-666
Position component Y ..... 3-667
Position component Z ..... 3-667
Position control cycle factor ..... 3-684
position control gain factor ..... 3-496, 3-590
Position controller difference ..... 3-503, 3-596
Position of the cutting edge center point. ..... 3-599
Position of tool base, desired value ..... 3-599
Position offset from synchronous actions ..... 3-486, ..... 3-580
Position offset referring to leading axis/spindle .. 3-491, 3-585
POSITION_LSB
MD 5714 ..... 2-166
POSITIONING_TIME:MD 36020 ..... 2-366
Power section code of drive module ..... 3-684
POWER_DISABLE_DELAY
MD 5404 ..... 2-160
POWER_ENABLE_DELAY
MD 5532 ..... 2-163
POWER_FACTOR_COS_PHI
MD 1129 ..... 2-96
POWER_LIMIT_1
MD 1235 ..... 2-109
POWER_LIMIT_2
MD 1236 ..... 2-109
POWER_LIMIT_GENERATOR
MD 1237 ..... 2-109
poweronTime ..... 3-706
preContrFactTorque ..... 3-497, 3-591
preContrFactVel ..... 3-497, 3-591
preContrMode ..... 3-498, 3-592
PREP_COM_TASK_CYCLE_RATIO:MD 10160 ..... 2-214
PREP_DRIVE_TASK_CYCLE_RATIO:MD 10150 ..... 2-214
PREPROCESSING_LEVEL:MD 10700 ..... 2-226
PRESET ..... 3-498, 3-592
Preset state ..... 3-498, 3-592
PRESETActive ..... 3-498, 3-592
PRESETVal ..... 3-498, 3-592
PRESSURE_LSB
MD 5710 ..... 2-166
PRESSURE_SENS_A_OFFS
MD 5551 ..... 2-163
PRESSURE_SENS_A_REF
MD 5550 ..... 2-163
PRESSURE_SENS_B_OFFS
MD 5553 ..... 2-164
PRESSURE_SENS_B_REF
MD 5552 ..... 2-164
PREVENT_SYNACT_LOCK:MD 11500 .... 2-241
PREVENT_SYNACT_LOCK_CHAN:MD 21240 ..... 2-294
PRG_DEFAULT_DIR
MD 9005 ..... 2-169
Processing block for the start trigger ..... 3-715
Processing block for the stop trigger ..... 3-715
PROCESSOR_LOAD
MD 1735 ..... 2-146
PROCESSOR_UTILIZATION
MD 5735 ..... 2-167
PROCESSTIMER_MODE:MD 27860 ..... 2-328
Profibus actual value message frame ..... 3-474
PROFIBUS_ACTVAL_LEAD_TIME:MD 37600 ... ..... 2-392
PROFIBUS_ALARM_MARKER:MD 10059 2-209
PROFIBUS_CTRL_CONFIG:MD 37610 .... 2-392
PROFIBUS_OUTVAL_DELAY_TIME:MD 37602 ..... 2-392
PROFIBUS_SDB_NUMBER:MD 11240 .... 2-235
PROFIBUS_SHUTDOWN_TYPE:MD 11250 ..... ..... 2-235
PROFIBUS_TORQUE_RED_RESOL:MD 37620 ..... 2-392
PROFISAFE_IN_ADDRESS:MD 10386 .... 2-219
PROFISAFE_IN_ASSIGN:MD 10388 ..... 2-220
PROFISAFE_IN_FILTER:MD 13300 ..... 2-251
PROFISAFE_IPO_TIME_RATIO:MD 10098 ..... ..... 2-213

© Siemens AG 2004 All Rights Reserved

PROFISAFE_MASTER_ADDRESS:MD 10385 .. ....2-219
PROFISAFE_OUT_ADDRESS:MD 10387.2-219
PROFISAFE_OUT_ASSIGN:MD 10389.....2-220
PROFISAFE_OUT_FILTER:MD 13301.....2-251
Prog. spindle mode..... 3-609, 3-615
Prog. spindle mode block search..... 3-609, 3-615
Prog. transformation block search .....3-535
PROG_EVENT_IGN_INHIBIT:MD 20107 ..2-274
PROG_EVENT_IGN_SINGLEBLOCK:MD 20106.....2-274
PROG_EVENT_MASK:MD 20108.....2-275
PROG_EVENT_MASK_PROPERTIES:MD 20109.....2-275
PROG_EVENT_NAME:MD 11620 .....2-242
PROG_FUNCTION_MASK:MD 10280.....2-216
PROG_SD_RESET_SAVE_TAB:MD 10710....2-227
PROG_SIGNAL_ADDRESS
MD 1622 .....2-135
MD 5622 .....2-164
PROG_SIGNAL_FLAGS
MD 1620 .....2-135
MD 5620 .....2-164
PROG_SIGNAL_HYSTERESIS
MD 1624 .....2-135
MD 5624 .....2-165
PROG_SIGNAL_NR
MD 1621 .....2-135
MD 5621 .....2-164
PROG_SIGNAL_OFF_DELAY
MD 1626 .....2-136
MD 5626 .....2-165
PROG_SIGNAL_ON_DELAY
MD 1625 .....2-135
MD 5625 .....2-165
PROG_SIGNAL_THRESHOLD
MD 1623 .....2-135
MD 5623 .....2-164
PROG_TEST_MASK:MD 10707 .....2-227
progDistToGo.....3-599
progDLNumberS.....3-539
progDuploNumber .....3-539
progIndexAxPosNo..... 3-498, 3-592
progName.....3-554, 3-557, 3-559, 3-562
progProtText .....3-438
Program execution from external active .....3-536
Program is waiting for _N_F_MODE .....3-539
Program name .....3-554, 3-557, 3-559, 3-562
Program status.....3-539
Program status according to $AC_PROG.....3-527
Program test .....3-548
PROGRAM_SETTINGS
MD 9460 .....2-184
Programmable frame .....3-524
Programmed circular passes.....3-553
Programmed circular passes search.....3-553
Programmed dwell time.....3-535
Programmed position for block search .....3-605
Programmed position, actual value.....3-598
Programmed position, desired value.....3-599
Programmed position, distance-to-go.....3-599
Programmed position, REPOS ..... 3-599
Programmed SUG desired value .....3-506, 3-509, .....3-608, 3-614
progREPOS ..... 3-599
progStatus ..... 3-539
progTestActive..... 3-548
progTNumber ..... 3-539
progTNumberLong ..... 3-539
progToolIdent ..... 3-539
progWaitForEditUnlock..... 3-539
PROTAREA_GEOAX_CHANGE_MODE:MD 10618 ..... 2-224
protAreaCounter ..... 3-539
protCnfgAutoLoad..... 3-463
protCnfgAutoLoadFile..... 3-463
protCnfgAutoSave..... 3-463
protCnfgCtl..... 3-463
protCnfgFilename ..... 3-463
protCnfgStat ..... 3-463
Protection zone modification counter..... 3-539
PROTOC_FILE_MEM:MD 11295 ..... 2-235
PROTOC_IPOCYCLE_CONTROL:MD 11297 .... ..... 2-236
protocLastValNetIpoCycle..... 3-463
protocMaxValNetIpoCycle..... 3-464
protocolFilename ..... 3-715
protocStrtMaskInt16 ..... 3-464
protocStrtMaskInt32 ..... 3-464
protocStrtMatchCount..... 3-464
protocStrtNumEvDelay ..... 3-464
protocStrtRemMatchCount..... 3-464
protocStrtState..... 3-464
protocStrtType..... 3-464
protocStrtValueInt16..... 3-465
protocStrtValueInt32..... 3-465
protocStrtValueReal32 ..... 3-465
protocStrtValueReal64 ..... 3-465
protocStrtVarCol ..... 3-465
protocStrtVarRow..... 3-465
protocStrtVarType..... 3-465
protocStrtVarUnit ..... 3-465
protocTrigMaskInt16..... 3-465
protocTrigMaskInt32..... 3-465
protocTrigMatchCount ..... 3-466
protocTrigNumEvDelay..... 3-466
protocTrigRemMatchCount ..... 3-466
protocTrigState..... 3-466
protocTrigType ..... 3-466
protocTrigValueInt16 ..... 3-466
protocTrigValueInt32 ..... 3-466
protocTrigValueReal32 ..... 3-466
protocTrigValueReal64 ..... 3-467
protocTrigVarArea..... 3-467
protocTrigVarCol..... 3-467
protocTrigVarRow ..... 3-467
protocTrigVarType ..... 3-467
protocTrigVarUnit..... 3-467
protocUserActive ..... 3-540
protSessAccR..... 3-467
protSessComm..... 3-467
protSessConn..... 3-467

© Siemens AG 2004 All Rights Reserved

protSessName ....3-467
protSessPrior ....3-468
pSMode .... 3-609, 3-615
pSModeS .... 3-609, 3-615
pTc....3-540
pTcAng....3-540
pTcDiff....3-540
pTcNum....3-540
pTcSol....3-540
pTcStat....3-540
pTCutMod....3-540
pTCutModS....3-541
pToolO ....3-541
PULSE_SUPPRESSION_DELAY
MD 1404 ....2-120
PULSE_SUPPRESSION_SPEED
MD 1403 ....2-120
PUNCH_DWELLTIME:MD 42400....2-400
PUNCH_PARTITION_TYPE:MD 26016....2-326
PUNCH_PATH_SPLITTING:MD 26014 ....2-326
punchActive ....3-570
punchDelayActive ....3-570
punchDelayTime....3-571
Punching delay time....3-571
Punching or nibbling active ....3-570
Punching with delay active....3-570
PUNCHNIB_ACTIVATION:MD 26012....2-326
PUNCHNIB_ASSIGN_FASTIN:MD 26000 .2-325
PUNCHNIB_ASSIGN_FASTOUT:MD 26002.....
....2-325
PUNCHNIB_AXIS_MASK:MD 26010 ....2-325
punchNibActivation ....3-438
PWM_FREQUENCY
MD 1100 ....2-91

## Q

qecLrnIsOn .... 3-498, 3-592
Quadrant error compensation learning active....3-498,
....3-592

## R

R....3-690
R parameter (from SW 3.3)....3-690
R parameter (up to SW 3.2)....3-690
Radius of the circle (only effective for G02/G03) .....
....3-552
RADIUS_NAME:MD 10654....2-226
Ramp-function generator rapid stop..... 3-493, 3-587
rapFeedRateOvr....3-541
rapFeedRateOvrActive....3-549
Rapid traverse override ....3-541
RATED_OUTVAL:MD 32250....2-350
RATED_VELO:MD 32260....2-350
readyActive....3-515
Real data ....3-456
Real data (32 bits) from/to the PLC....3-455
REBOOT_DELAY_TIME:MD 10088....2-211
Received message frame .... 3-703
REDUCE_ARMATURE_INDUCTANCE
MD 1182 .... 2-101
Reference point cam .... 3-498, 3-592
Referenced spindle number .... 3-635
References .... 0-793
REFP_BERO_LOW_ACTIVE:MD 34120... 2-360
REFP_CAM_DIR_IS_MINUS:MD 34010... 2-358
REFP_CAM_IS_ACTIVE:MD 34000..... 2-358
REFP_CAM_MARKER_DIST:MD 34093 .. 2-359
REFP_CAM_SHIFT:MD 34092..... 2-359
REFP_CYCLE_NR:MD 34110 .... 2-360
REFP_MAX_CAM_DIST:MD 34030 ..... 2-358
REFP_MAX_MARKER_DIST:MD 34060... 2-358
REFP_MOVE_DIST:MD 34080 .... 2-359
REFP_MOVE_DIST_CORR:MD 34090..... 2-359
REFP_NC_START_LOCK:MD 20700 ..... 2-287
REFP_PERMITTED_IN_FOLLOWUP:MD 34104
.... 2-359
REFP_SEARCH_MARKER_REVERSE:MD
34050 .... 2-358
REFP_SET_POS:MD 34100..... 2-359
REFP_STOP_AT_ABS_MARKER:MD 34330.....
.... 2-361
REFP_SYNC_ENCS:MD 34102 .... 2-359
REFP_VELO_POS:MD 34070 .... 2-359
REFP_VELO_SEARCH_CAM:MD 34020 . 2-358
REFP_VELO_SEARCH_MARKER:MD 34040....
.... 2-358
refPtBusy .... 3-498, 3-592
refPtCamNo .... 3-498, 3-592
refPtStatus .... 3-499, 3-593
RELUCT_TORQUE_RATIO
MD 1149 .... 2-99
remainDwellTime .... 3-541
Remaining dwell time .... 3-541
REORG_LOG_LIMIT:MD 27900..... 2-328
REPOS_MODE_MASK:MD 11470 ..... 2-240
Representation of active tool .... 3-430
reqParts .... 3-541
Requested gear stage .. 3-506, 3-509, 3-608, 3-614
RESET_MODE_MASK:MD 20110..... 2-275
resetActive .... 3-515
Restricted cyclic variable service .... 3-536
Result
number of tools found .... 3-655
T-numbers of the tools found .... 3-655
resultNrOfTools .... 3-655
resultPar1 .... 3-715
resultToolNr .... 3-655
RETRACT_AND_GENERATOR_MODE
MD 1636 .... 2-137
RETRACT_SPEED
MD 1639 .... 2-137
RETRACT_TIME
MD 1638 .... 2-137
Retraction of the single axis is programmed..... 3-581
Retraction of the single axis programmed..... 3-487
Retraction position of the single axis ..... 3-487, 3-581
Return point on the contour for repositioning..... 3-603
Return value 2 for command MagCBCmd..... 3-636
Return variable 1 for the command MagCBCmd 3-636

© Siemens AG 2004 All Rights Reserved

RLI_INTEGRATOR_TIME
MD 1077 ....2-90
ROT_AX_SWL_CHECK_MODE:MD 21180.....
....2-292
ROT_IS_MODULO:MD 30310....2-342
ROT_VECTOR_NAME_TAB:MD 10642 ....2-225
rotation .3-511, 3-512, 3-572, 3-573, 3-611, 3-617
Rotation ....3-573
Rotation of a settable frame ..... 3-512, 3-572, 3-611
Rotation of an active frame ..... 3-511, 3-617
ROTOR_COLD_RESISTANCE
MD 1138 ....2-97
ROTOR_FLUX_LSB
MD 1712 ....2-142
ROTOR_LEAKAGE_REACTANCE
MD 1140 ....2-97
ROTOR_POS_LSB
MD 1714 ....2-143
rotSys....3-541
ROV rapid traverse override ....3-549
row....3-710
rpa ....3-690
RUN_OVERRIDE_0:MD 12200 ....2-244
Runtime of selected NC program....3-708

## S

S_VALUES_ACTIVE_AFTER_RESET:MD
22400....2-301
Sadr ....3-565
Safe actual position of axis ..... 3-501, 3-595
Safe actual position of the drive..... 3-501, 3-595
Safe input signals of the axis..... 3-500, 3-594
Safe input signals of the drive ..... 3-501, 3-594
Safe input signals of the drive part 2 ..... 3-501, 3-594
Safe input signals part 2 ..... 3-500, 3-594
Safe limit of actual speed..... 3-500, 3-594
Safe limit of desired speed..... 3-500, 3-594
Safe operation active ..... 3-500, 3-594
Safe output signals of the axis..... 3-501, 3-595
Safe output signals of the drive ..... 3-501, 3-595
Safe output signals of the drive part 2 ... 3-501, 3-595
Safe output signals part 2 ..... 3-501, 3-595
SAFE_ACC_TEST_TIMEOUT
MD 1358 ....2-116
SAFE_ACCEPTANCE_TST_TIMEOUT:MD
36958....2-378
SAFE_ACKN:MD 36997 ....2-385
SAFE_ACKN_READ
MD 1397 ....2-119
SAFE_ACKN_WRITE
MD 1396 ....2-118
SAFE_ACT_CHECKSUM
MD 1398 ....2-119
SAFE_ACT_CHECKSUM:MD 36998 .....2-385
SAFE_ACT_STOP_OUTPUT:MD 36990 ...2-384
SAFE_ALARM_SUPPRESS_LEVEL:MD 10094
....2-212
SAFE_BRAKETEST_CONTROL:MD 36968.....
....2-380
SAFE_BRAKETEST_POS_TOL:MD 36967 .....
..... 2-380
SAFE_BRAKETEST_TORQUE:MD 36966 .....
..... 2-380
SAFE_CAM_MINUS_OUTPUT:MD 36989.....
..... 2-384
SAFE_CAM_PLUS_OUTPUT:MD 36988 .. 2-384
SAFE_CAM_POS_MINUS
MD 1337 ..... 2-114
SAFE_CAM_POS_MINUS:MD 36937 ..... 2-375
SAFE_CAM_POS_PLUS
MD 1336 ..... 2-114
SAFE_CAM_POS_PLUS:MD 36936 ..... 2-375
SAFE_CAM_TOL
MD 1340 ..... 2-114
SAFE_CAM_TOL:MD 36940 ..... 2-375
SAFE_CONFIG_CHANGE_DATE:MD 36993 .....
..... 2-385
SAFE_CROSSCHECK_CYCLE:MD 36992.....
..... 2-384
SAFE_DES_CHECKSUM
MD 1399 ..... 2-119
SAFE_DES_CHECKSUM:MD 36999 ..... 2-386
SAFE_DES_VELO_LIMIT:MD 36933 ..... 2-374
SAFE_DIAG_611D_RESULTLIST1
MD 1392 ..... 2-118
SAFE_DIAG_611D_RESULTLIST2
MD 1394 ..... 2-118
SAFE_DIAG_NC_RESULTLIST1
MD 1391 ..... 2-118
SAFE_DIAG_NC_RESULTLIST2
MD 1393 ..... 2-118
SAFE_DIAGNOSIS_MASK:MD 10096 ..... 2-212
SAFE_ENC_CONFIG
MD 1316 ..... 2-112
SAFE_ENC_FREQ_LIMIT
MD 1326 ..... 2-113
SAFE_ENC_FREQ_LIMIT:MD 36926 ..... 2-373
SAFE_ENC_GEAR_DENOM
MD 1321 ..... 2-113
SAFE_ENC_GEAR_DENOM:MD 36921 ... 2-372
SAFE_ENC_GEAR_NUMERA
MD 1322 ..... 2-113
SAFE_ENC_GEAR_NUMERA:MD 36922. 2-373
SAFE_ENC_GEAR_PITCH
MD 1320 ..... 2-113
SAFE_ENC_GEAR_PITCH:MD 36920..... 2-372
SAFE_ENC_GRID_POINT_DIST
MD 1317 ..... 2-112
SAFE_ENC_GRID_POINT_DIST:MD 36917 .....
..... 2-372
SAFE_ENC_INPUT_NR:MD 36912..... 2-371
SAFE_ENC_IS_LINEAR:MD 36916 ..... 2-372
SAFE_ENC_MODULE_NR:MD 36911 ..... 2-371
SAFE_ENC_POLARITY:MD 36925..... 2-373
SAFE_ENC_RESOL
MD 1318 ..... 2-112
SAFE_ENC_RESOL:MD 36918..... 2-372
SAFE_ENC_SEGMENT_NR:MD 36910.... 2-371
SAFE_ENC_TYPE:MD 36915 ..... 2-371
SAFE_EXT_PULSE_ENAB_OUTPUT:MD
36984 ..... 2-383
SAFE_EXT_STOP_INPUT:MD 36977..... 2-382

© Siemens AG 2004 All Rights Reserved

SAFE_FIRMWARE_VERSION
MD 1390 ....2-117
SAFE_FUNCTION_ENABLE
MD 1301 ....2-112
SAFE_FUNCTION_ENABLE:MD 36901 ....2-370
SAFE_GEAR_SELECT_INPUT:MD 36974 2-381
SAFE_IN_HW_ASSIGN:MD 10390....2-220
SAFE_IPO_STOP_GROUP:MD 36964....2-379
SAFE_IS_ROT_AX
MD 1302 ....2-112
SAFE_IS_ROT_AX:MD 36902 ....2-370
SAFE_MODE_MASK:MD 10095 ....2-212
SAFE_MODE_SWITCH_TIME
MD 1350 ....2-115
SAFE_MODE_SWITCH_TIME:MD 36950 .2-377
SAFE_MODULO_RANGE
MD 1305 ....2-112
SAFE_MODULO_RANGE:MD 36905 ....2-370
SAFE_OUT_HW_ASSIGN:MD 10392....2-220
SAFE_OVR_INPUT:MD 36978....2-382
SAFE_PARK_ALARM_SUPPRESS:MD 36965 ....2-379
SAFE_POS_LIMIT_MINUS
MD 1335 ....2-114
SAFE_POS_LIMIT_MINUS:MD 36935....2-375
SAFE_POS_LIMIT_PLUS
MD 1334 ....2-114
SAFE_POS_LIMIT_PLUS:MD 36934....2-374
SAFE_POS_SELECT_INPUT:MD 36973 ..2-381
SAFE_POS_STOP_MODE
MD 1362 ....2-117
SAFE_POS_STOP_MODE:MD 36962....2-379
SAFE_POS_TOL
MD 1342 ....2-114
SAFE_POS_TOL:MD 36942....2-375
SAFE_PREV_CONFIG:MD 36994 ....2-385
SAFE_PULSE_DIS_CHECK_TIME
MD 1357 ....2-116
SAFE_PULSE_DIS_CHECK_TIME:MD 36957... ....2-378
SAFE_PULSE_DIS_TIME_BUSFAIL:MD 10089 ....2-211
SAFE_PULSE_DIS_TIME_FAIL
MD 1380 ....2-117
SAFE_PULSE_DISABLE_DELAY
MD 1356 ....2-116
SAFE_PULSE_DISABLE_DELAY:MD 36956 ..... ....2-378
SAFE_PULSE_ENABLE_OUTPUT:MD 36986 2-383
SAFE_PULSE_STATUS_INPUT:MD 36976 ..... ....2-381
SAFE_REFP_POS_TOL
MD 1344 ....2-114
SAFE_REFP_POS_TOL:MD 36944....2-376
SAFE_REFP_STATUS_OUTPUT:MD 36987 ..... ....2-384
SAFE_SLIP_VELO_TOL
MD 1349 ....2-115
SAFE_SLIP_VELO_TOL:MD 36949....2-376
SAFE_SPL_STOP_MODE:MD 10097....2-213
SAFE_SS_DISABLE_INPUT:MD 36971 ....2-380
SAFE_SS_STATUS_OUTPUT:MD 36981 .2-383
SAFE_STANDSTILL_POS:MD 36995..... 2-385
SAFE_STANDSTILL_TOL
MD 1330 ..... 2-113
SAFE_STANDSTILL_TOL:MD 36930 ..... 2-373
SAFE_STANDSTILL_VELO_TOL
MD 1360 ..... 2-116
SAFE_STANDSTILL_VELO_TOL:MD 36960..... ..... 2-378
SAFE_STOP_F_DIAGNOSIS
MD 1395 ..... 2-118
SAFE_STOP_REQUEST_EXT_INPUT:MD 36979 ..... 2-382
SAFE_STOP_REQUEST_INPUT:MD 36975 ..... ..... 2-381
SAFE_STOP_SWITCH_TIME_C
MD 1352 ..... 2-115
SAFE_STOP_SWITCH_TIME_C:MD 36952..... ..... 2-377
SAFE_STOP_SWITCH_TIME_D
MD 1353 ..... 2-116
SAFE_STOP_SWITCH_TIME_D:MD 36953..... ..... 2-377
SAFE_STOP_SWITCH_TIME_E
MD 1354 ..... 2-116
SAFE_STOP_SWITCH_TIME_E:MD 36954 ..... ..... 2-377
SAFE_STOP_SWITCH_TIME_F
MD 1355 ..... 2-116
SAFE_STOP_SWITCH_TIME_F:MD 36955 ..... ..... 2-378
SAFE_STOP_VELO_TOL
MD 1348 ..... 2-115
SAFE_STOP_VELO_TOL:MD 36948..... 2-376
SAFE_SVSS_DISABLE_INPUT:MD 369702-380
SAFE_SVSS_STATUS_OUTPUT:MD 36980 ..... ..... 2-382
SAFE_TEST_MODE
MD 1370 ..... 2-117
SAFE_TEST_STATE
MD 1371 ..... 2-117
SAFE_VELO_LIMIT
MD 1331 ..... 2-113
SAFE_VELO_LIMIT:MD 36931..... 2-374
SAFE_VELO_OVR_FACTOR
MD 1332 ..... 2-113
SAFE_VELO_OVR_FACTOR:MD 36932.. 2-374
SAFE_VELO_SELECT_INPUT:MD 36972 2-381
SAFE_VELO_STATUS_OUTPUT:MD 36982 ..... ..... 2-383
SAFE_VELO_STOP_MODE
MD 1361 ..... 2-117
SAFE_VELO_STOP_MODE:MD 36961 .... 2-379
SAFE_VELO_STOP_REACTION
MD 1363 ..... 2-117
SAFE_VELO_STOP_REACTION:MD 36963..... ..... 2-379
SAFE_VELO_SWITCH_DELAY
MD 1351 ..... 2-115
SAFE_VELO_SWITCH_DELAY:MD 36951 ..... ..... 2-377
SAFE_VELO_X
MD 1346 ..... 2-115
SAFE_VELO_X:MD 36946 ..... 2-376

© Siemens AG 2004 All Rights Reserved

SAFE_VELO_X_STATUS_OUTPUT:MD 36985 ..... 2-383
safeAcceptCheckPhase ..... 3-499, 3-593
safeAcceptTestMode ..... 3-499, 3-593
safeAcceptTestPhase ..... 3-499, 3-593
safeAcceptTestSE ..... 3-499, 3-593
safeAcceptTestState ..... 3-500, 3-593
safeActPosDiff ..... 3-500, 3-594
safeActVeloDiff ..... 3-500, 3-594
safeActVeloLimit ..... 3-500, 3-594
safeDesVeloLimit ..... 3-500, 3-594
safeExtInpValNckBit ..... 3-468
safeExtInpValNckWord ..... 3-468
safeExtInpValPlcBit ..... 3-468
safeExtInpValPlcWord ..... 3-468
safeExtOutpValNckBit ..... 3-468
safeExtOutpValNckWord ..... 3-468
safeExtOutpValPlcBit ..... 3-468
safeExtOutpValPlcWord ..... 3-468
safeFctEnable ..... 3-500, 3-594
safeInputSig ..... 3-500, 3-594
safeInputSig2 ..... 3-500, 3-594
safeInputSigDrive ..... 3-501, 3-594
safeInputSigDrive2 ..... 3-501, 3-594
safeIntInpValNckBit ..... 3-469
safeIntInpValNckWord ..... 3-469
safeIntInpValPlcBit ..... 3-469
safeIntInpValPlcWord ..... 3-469
safeIntOutpValNckBit ..... 3-469
safeIntOutpValNckWord ..... 3-469
safeIntOutpValPlcBit ..... 3-469
safeIntOutpValPlcWord ..... 3-469
safeMarkerNck ..... 3-469
safeMarkerPlc ..... 3-470
safeMaxVeloDiff ..... 3-501, 3-595
safeMeasPos ..... 3-501, 3-595
safeMeasPosDrive ..... 3-501, 3-595
safeOutputSig ..... 3-501, 3-595
safeOutputSig2 ..... 3-501, 3-595
safeOutputSigDrive ..... 3-501, 3-595
safeOutputSigDrive2 ..... 3-501, 3-595
safePlcIn ..... 3-470
safePlcOut ..... 3-470
safeSplStatus ..... 3-470
safeStopFDiagnosis ..... 3-621, 3-623
safeStopOtherAxis ..... 3-501, 3-595
safeTimerNck ..... 3-470
SAFETY_CYCLE_TIME
MD 1300 ..... 2-112
SAFETY_SYSCLOCK_TIME_RATIO:MD 10090 ..... 2-211
safeXcmpCmd ..... 3-470
safeXcmpLevel ..... 3-471
safeXcmpState ..... 3-471
Save axial measuring point 1 ..... 3-518
Save axial measuring point 2 ..... 3-519
Save axial measuring point 3 ..... 3-519
Save axial measuring point 4 ..... 3-519
Save axial setpoint ..... 3-520
Save measuring point ..... 3-523
scaleFact ..... 3-511, 3-512, 3-513, 3-572, 3-573, 3-612, 3-617
Scaling factor ..... 3-573
Scaling factor of a settable frame ..... 3-512, 3-513, 3-572, 3-612
Scaling factor of an active frame ..... 3-511, 3-617
SCALING_FACTOR_G70_G71:MD 31200 ..... 2-347
SCALING_FACTORS_USER_DEF:MD 10230 ..... 2-216
SCALING_SYSTEM_IS_METRIC:MD 10240 ..... 2-216
SCALING_USER_DEF_MASK:MD 10220 2-215
SCALING_VALUE_INCH:MD 10250 ..... 2-216
scalingSystemCounter ..... 3-471
Screenform
ACC files available ..... 3-695
Screenform for system frames ..... 3-439
SD_MAX_PATH_ACCEL:MD 42500 ..... 2-403
SD_MAX_PATH_JERK:MD 42510 ..... 2-403
Search direction ..... 3-559, 3-562
Search pointer ..... 3-557, 3-560, 3-562
Search string ..... 3-559, 3-562
Search type ..... 3-560, 3-562
SEARCH_RUN_MODE:MD 11450 ..... 2-240
searchString ..... 3-559, 3-562
searchType ..... 3-560, 3-562
seekOffset ..... 3-557, 3-560, 3-562
seekw ..... 3-554, 3-557
SEMA data accessible ..... 3-471
semaDataAvailable ..... 3-471
SERIAL_NO_ENCODER
MD 1025 ..... 2-88
MD 5025 ..... 2-155
SERIAL_NO_ENCODER_DM
MD 1038 ..... 2-89
SERIES_INDUCTANCE
MD 1119 ..... 2-95
SERUPRO_MASK:MD 10708 ..... 2-227
SERUPRO_SPEED_FACTOR:MD 22601 2-303
SERUPRO_SPEED_MODE:MD 22600 ..... 2-303
SERUPRO_SYNC_MASK:MD 42125 ..... 2-399
seruproMasterChanNo ..... 3-541
seruproMasterNcuNo ..... 3-542
Servo data 32-bit ..... 3-693
Servo data 64-bit ..... 3-693
SERVO_DISABLE_DELAY_TIME:MD 36620 ..... 2-369
servoDataFl32 ..... 3-693
servoDataFl64 ..... 3-693
Set of blocks from the current operation ..... 3-552
SETINT_ASSIGN_FASTIN:MD 21210 ..... 2-294
Setpoint assignment ..... 3-685
Setpoint cutting angle ..... 3-523
Setpoint of axis-specific feedrate, ..... 3-491
Setpoint workpiece position angle ..... 3-526
Settable data management frame ..... 3-525
Settable value for INC_VAR ..... 3-482, 3-576, 3-600
Settings for NCK tool management ..... 3-428
Set-up mode ..... 3-495, 3-589
setupTime ..... 3-706
SHAPED_TOOL_CHECKSUM:MD 20372 2-282

© Siemens AG 2004 All Rights Reserved

SHAPED_TOOL_TYPE_NO:MD 20370.....2-282
SHOW_CHANNEL_SPANNING_STATE
MD 9052 .....2-171
SI PowerOn alarms can be acknowledged by Reset....
..... 3-499, 3-593
siemData .....3-678, 3-679, 3-682
siemEdgeData.....3-680
Siemens appl. tool cutting edge parameter.....3-680
Siemens application magazine data..... 3-679, 3-681
Siemens application monitoring data.....3-682
Siemens application tool parameter .....3-678
siemPlaceData .....3-681
Signal from cycle to PLC .....3-536
Signal from PLC to cycle .....3-535
Signals to axis/spindle (PLC → NCK).....4-772
Signals to/from NCK channel (DB 21 -28) ..4-754
Sign-of-life error counter encoder 1 .....3-696
Sign-of-life error counter encoder 2 .....3-696
Sign-of-life error counter output.....3-696
simo611dSupport .....3-434
SIMU_AX_VDI_OUTPUT:MD 30350.....2-343
Simulated lead value - position..... 3-485, 3-579
Simulated leading value velocity..... 3-485, 3-579
Single axis status..... 3-488, 3-582
Single block .....3-549
Single block mode .....3-549
Single block read in quasi-stop state.....3-554
Single channel SI signal from NCK to PLC .....3-470
Single channel SI signal from PLC to NCK .....3-470
singleBlock .....3-554
SINGLEBLOCK2_STOPRE:MD 42200 .....2-400
singleBlockActive.....3-549
singleBlockType .....3-549
Size downwards in half locations.....3-628
Size of DRAM file system no. 1 .....3-472
Size of DRAM file system no. 2 .....3-472
Size of NCK alarm buffer.....3-428
Size of SRAM file system .....3-472
Size to the left in half locations .....3-629
Size to the right in half locations .....3-629
Size upwards in half locations .....3-629
skip .....3-715
Skip level /0 .....3-549
Skip level /1 .....3-549
Skip level /2 .....3-549
Skip level /3 .....3-549
Skip level /4 .....3-549
Skip level /5 .....3-550
Skip level /6 .....3-550
Skip level /7 .....3-550
Skip level /8 .....3-550
Skip level /9 .....3-550
skipLevel0Active.....3-549
skipLevel1Active.....3-549
skipLevel2Active.....3-549
skipLevel3Active.....3-549
skipLevel4Active.....3-549
skipLevel5Active.....3-550
skipLevel6Active.....3-550
skipLevel7Active.....3-550
skipLevel8Active.....3-550
skipLevel9Active..... 3-550
SLASH_MASK:MD 10706..... 2-227
Slave active on bus or not (LED green) ..... 3-700
Slave data are available ..... 3-700
Slot information is available..... 3-702
Slot number within the slave..... 3-702
SMOOTH_CONTUR_TOL:MD 42465 ..... 2-401
SMOOTH_ORI_TOL:MD 42466..... 2-401
SMOOTH_RUN_DIAGNOSIS
MD 1724 ..... 2-144
SMOOTH_RUN_TOL
MD 1615 ..... 2-134
Smoothing the desired value of the rotary speed.....
.....3-495, 3-589
SMOOTHING_MODE:MD 20480..... 2-285
SOFT_ACCEL_FACTOR:MD 32433 ..... 2-352
Software end position, negative direction..... 3-488,
..... 3-582
Software end position, positive direction 3-488, 3-582
Source location number new tool..... 3-532
Source location number old tool ..... 3-532
Source magazine new tool..... 3-532
Source magazine old tool..... 3-532
Source of the lead value .....3-485, 3-579
SPDCTRL_INTEGR_TIME_1_AM
MD 1453 ..... 2-125
spec .....3-502, 3-595, 3-606
Specification of channel for SERUPRO .3-559, 3-562
specParts..... 3-542
Speed setpoint ..... 3-491
Speed, setpoint..... 3-622
SPEED_CRTL_DISABLE_STOPTIME
MD 5402 ..... 2-160
SPEED_DES_EQ_ACT_DELAY
MD 1427 ..... 2-125
SPEED_DES_EQ_ACT_TOL
MD 1426 ..... 2-124
SPEED_FFW_DELAY
MD 1425 ..... 2-124
SPEED_FFW_FILTER_TIME
MD 1424 ..... 2-124
SPEED_FILTER_1_BANDWIDTH
MD 1515 ..... 2-128
MD 5515 ..... 2-163
SPEED_FILTER_1_BS_FREQ
MD 1520 ..... 2-129
MD 5520 ..... 2-163
SPEED_FILTER_1_BW_NUMERATOR
MD 1516 ..... 2-128
MD 5516 ..... 2-163
SPEED_FILTER_1_DAMPING
MD 1507 ..... 2-127
MD 5507 ..... 2-163
SPEED_FILTER_1_FREQUENCY
MD 1506 ..... 2-127
MD 5506 ..... 2-163
SPEED_FILTER_1_SUPPR_FREQ
MD 1514 ..... 2-128
MD 5514 ..... 2-163
SPEED_FILTER_1_TIME
MD 1502 ..... 2-127
MD 5502 ..... 2-163
SPEED_FILTER_2_BANDWIDTH

© Siemens AG 2004 All Rights Reserved

MD 1518 ....2-129
SPEED_FILTER_2_BS_FREQ
MD 1521 ....2-130
SPEED_FILTER_2_BW_NUMERATOR
MD 1519 ....2-129
SPEED_FILTER_2_DAMPING
MD 1509 ....2-128
SPEED_FILTER_2_FREQUENCY
MD 1508 ....2-128
SPEED_FILTER_2_SUPPR_FREQ
MD 1517 ....2-129
SPEED_FILTER_2_TIME
MD 1503 ....2-127
SPEED_FILTER_TYPE
MD 1501 ....2-126
MD 5501 ....2-163
SPEED_LIMIT
MD 1147 ....2-99
SPEED_LSB
MD 1711 ....2-142
MD 5711 ....2-166
SPEED_THRESHOLD_MIN
MD 1418 ....2-123
SPEED_THRESHOLD_X
MD 1417 ....2-123
SPEEDCTRL_ADAPT_ENABLE
MD 1413 ....2-122
MD 5413 ....2-160
SPEEDCTRL_ADAPT_SPEED_1
MD 1411 ....2-121
SPEEDCTRL_ADAPT_SPEED_2
MD 1412 ....2-122
SPEEDCTRL_CYCLE_TIME
MD 1001 ....2-84
MD 5001 ....2-154
SPEEDCTRL_DIFF_TIME
MD 5432 ....2-161
SPEEDCTRL_DIFF_TIME_A
MD 5431 ....2-161
SPEEDCTRL_DIFF_TIME_B
MD 5433 ....2-161
SPEEDCTRL_GAIN
MD 5407 ....2-160
SPEEDCTRL_GAIN_1
MD 1407 ....2-120
SPEEDCTRL_GAIN_1_AM
MD 1451 ....2-125
SPEEDCTRL_GAIN_2
MD 1408 ....2-121
SPEEDCTRL_GAIN_A
MD 5406 ....2-160
SPEEDCTRL_GAIN_B
MD 5408 ....2-160
SPEEDCTRL_INTEGRATOR_FEEDBK
MD 1421 ....2-124
MD 5421 ....2-160
SPEEDCTRL_INTEGRATOR_TIME
MD 5409 ....2-160
SPEEDCTRL_INTEGRATOR_TIME_1
MD 1409 ....2-121
SPEEDCTRL_INTEGRATOR_TIME_2
MD 1410 ....2-121
SPEEDCTRL_LIMIT_THRESHOLD
MD 1606 ....2-133
MD 5606 .... 2-164
SPEEDCTRL_LIMIT_TIME
MD 1605 .... 2-133
MD 5605 .... 2-164
SPEEDCTRL_PT1_TIME
MD 5430 .... 2-161
SPEEDCTRL_REF_MODEL_DAMPING
MD 1415 .... 2-122
MD 5415 .... 2-160
SPEEDCTRL_REF_MODEL_DELAY
MD 1416 .... 2-123
SPEEDCTRL_REF_MODEL_FREQ
MD 1414 .... 2-122
MD 5414 .... 2-160
SPEEDCTRL_TYPE
MD 1406 .... 2-120
speedLimit .... 3-507, 3-509, 3-609, 3-615
speedOvr .... 3-507, 3-510, 3-609, 3-615
SPF_END_TO_VDI:MD 20800 .... 2-288
SPIND_ACTIVE_AFTER_RESET:MD 35040.....
.... 2-362
SPIND_ASSIGN_TAB:MD 42800 .... 2-405
SPIND_ASSIGN_TAB_ENABLE:MD 20092.....
.... 2-273
SPIND_ASSIGN_TO_MACHAX:MD 350002-361
SPIND_CONSTCUT_S:MD 43202 .... 2-409
SPIND_DEF_MASTER_SPIND:MD 20090 2-273
SPIND_DEFAULT_ACT_MASK:MD 350302-362
SPIND_DEFAULT_MODE:MD 35020 .... 2-362
SPIND_DES_VELO_TOL:MD 35150.... 2-363
SPIND_DISPLAY_RESOLUTION
MD 9010.... 2-169
SPIND_EXTERN_VELO_LIMIT:MD 35160 2-363
SPIND_FUNC_RESET_MODE:MD 35032 2-362
SPIND_FUNCTION_MASK:MD 35035..... 2-362
SPIND_MAX_VELO_G26:MD 43220 .... 2-409
SPIND_MAX_VELO_LIMS:MD 43230.... 2-409
SPIND_MIN_VELO_G25:MD 43210.... 2-409
SPIND_ON_SPEED_AT_IPO_START:MD
35500.... 2-365
SPIND_OSCILL_ACCEL:MD 35410.... 2-365
SPIND_OSCILL_DES_VELO:MD 35400... 2-364
SPIND_OSCILL_START_DIR:MD 35430.. 2-365
SPIND_OSCILL_TIME_CCW:MD 35450... 2-365
SPIND_OSCILL_TIME_CW:MD 35440 ..... 2-365
SPIND_POSCTRL_VELO:MD 35300 .... 2-364
SPIND_POSIT_DELAY_TIME:MD 35310 . 2-364
SPIND_POSITIONING_DIR:MD 35350..... 2-364
SPIND_RIGID_TAPPING_M_NR:MD 20094 .....
.... 2-273
SPIND_S:MD 43200.... 2-408
SPIND_STOPPED_AT_IPO_START:MD 35510
.... 2-365
SPIND_VELO_LIMIT:MD 35100 .... 2-362
Spindle mode .... 3-507, 3-509, 3-609, 3-614
Spindle name .... 3-506, 3-509, 3-608, 3-614
Spindle override.... 3-507, 3-510, 3-609, 3-615
Spindle position .... 3-505, 3-508, 3-607, 3-613
Spindle speed limitation.... 3-688
Spindle speed, actual value .....3-505, 3-508, 3-607,
.... 3-613

© Siemens AG 2004 All Rights Reserved

Spindle speed, desired value ...3-506, 3-509, 3-608, 3-614
Spindle state .....3-507, 3-510, 3-609, 3-615
Spindle type .....3-507, 3-510, 3-609, 3-615
spindleType .....3-507, 3-510, 3-609, 3-615
spinNoDress .....3-635
SPL booting status.....3-470
SPLINE_FEED_PRECISION:MD 20262 ....2-281
splitBlock .....3-542
SPOS_TO_VDI:MD 20850.....2-288
ST_CYC_DRILL_MID_MAX_ECCENT
MD 9862 .....2-204
ST_CYCLE_PART_OFF_CTRL_DIST
MD 9859 .....2-203
ST_CYCLE_PART_OFF_CTRL_FEED
MD 9860 .....2-203
ST_CYCLE_PART_OFF_CTRL_FORC
MD 9861 .....2-203
ST_CYCLE_RET_DIST_FIXEDSTOP
MD 9857 .....2-203
ST_CYCLE_RET_DIST_PART_OFF
MD 9858 .....2-203
ST_CYCLE_SUB_SP_DIST
MD 9852 .....2-203
ST_CYCLE_SUB_SP_FEED
MD 9853 .....2-203
ST_CYCLE_SUB_SP_FORCE
MD 9854 .....2-203
ST_CYCLE_SUB_SP_WORK_POS
MD 9851 .....2-203
ST_CYCLE_TAP_MID_SETTINGS
MD 9856 .....2-203
ST_CYCLE_TAP_SETTINGS
MD 9855 .....2-203
ST_CYCLE_THREAD_RETURN_DIST
MD 9850 .....2-203
ST_DEFAULT_DIR_TURN_TOOLS
MD 9826 .....2-201
ST_DEFAULT_MACHINING_SENSE
MD 9827 .....2-202
ST_DISPL_DIR_MAIN_C_AX_INV
MD 9824 .....2-201
ST_DISPL_DIR_MAIN_SPIND_M3
MD 9822 .....2-201
ST_DISPL_DIR_SUB_C_AX_INV
MD 9825 .....2-201
ST_DISPL_DIR_SUB_SPIND_M3
MD 9823 .....2-201
ST_ENABLE_MAGN_GLASS
MD 9840 .....2-202
ST_ENABLE_PART_OFF_RECEPT
MD 9841 .....2-202
ST_ENABLE_SPINDLE_CLAMPING
MD 9843 .....2-202
ST_ENABLE_TAILSTOCK
MD 9842 .....2-202
ST_GEAR_STEPS_SPINDLE_MAIN
MD 9810 .....2-201
ST_GEAR_STEPS_SPINDLE_SUB
MD 9812 .....2-201
ST_GEAR_STEPS_SPINDLE_TOOL
MD 9811 ..... 2-201
ST_INDEX_AXIS_4
MD 9803 ..... 2-200
ST_INDEX_AXIS_C
MD 9807 ..... 2-201
ST_INDEX_SPINDLE_MAIN
MD 9804 ..... 2-200
ST_INDEX_SPINDLE_SUB
MD 9806 ..... 2-200
ST_INDEX_SPINDLE_TOOL
MD 9805 ..... 2-200
ST_MAGN_GLASS_POS_1
MD 9820 ..... 2-201
ST_MAGN_GLASS_POS_2
MD 9821 ..... 2-201
ST_MEAS_T_PROBE_INPUT_SUB
MD 9828 ..... 2-202
ST_OPTION_MASK
MD 9898 ..... 2-204
ST_SPINDLE_CHUCK_TYPES
MD 9829 ..... 2-202
ST_SPINDLE_PARA_ZL0
MD 9830 ..... 2-202
ST_SPINDLE_PARA_ZL1
MD 9831 ..... 2-202
ST_SPINDLE_PARA_ZL2
MD 9832 ..... 2-202
ST_SPINDLE_PARA_ZL3
MD 9833 ..... 2-202
ST_TRACE
MD 9899 ..... 2-204
STALL_TORQUE_REDUCTION
MD 1145 ..... 2-98
STANDSTILL_DELAY_TIME:MD 36040 ... 2-366
STANDSTILL_POS_TOL:MD 36030 ..... 2-366
STANDSTILL_VELO_TOL:MD 36060 ..... 2-367
Start offset FFS ..... 3-706
Start offset of curr. PCMCIA access ..... 3-706
START_AC_FIFO:MD 28262..... 2-334
START_MODE_MASK:MD 20112..... 2-275
START_MODE_MASK_PRT:MD 22620.... 2-303
Starting angle for thread ..... 3-687
startLockState ..... 3-542
startRejectCounter ..... 3-542
startTriggerLock..... 3-715
Startup synchronization status..... 3-704
STARTUP_ASSISTANCE
MD 1017 ..... 2-86
STARTUP_FACT_CURRCTRL
MD 1185 ..... 2-102
STARTUP_LOGO
MD 9050..... 2-171
STAT_NAME:MD 10670 ..... 2-226
State..... 3-714
State after travelling to fixed stop..... 3-496, 3-590
State of spindle rotation 3-507, 3-510, 3-610, 3-616
State of the binary inputs ..... 3-621, 3-623
State of the DC link voltage..... 3-493, 3-587
State of the function generator ..... 3-495, 3-589
State of the magazine..... 3-640
State of the probing function..... 3-497, 3-591
State of trace channel 1 ..... 3-502, 3-596

© Siemens AG 2004 All Rights Reserved

State of trace channel 2 ..... 3-502, 3-596
State of trace channel 3 ..... 3-502, 3-596
State of trace channel 4 ..... 3-502, 3-596
State var. PI Service auto. set-up of asyn. motor ..... 3-490, 3-584
STATOR_COLD_RESISTANCE
MD 1137 ..... 2-97
STATOR_LEAKAGE_REACTANCE
MD 1139 ..... 2-97
status ..3-482, 3-507, 3-510, 3-560, 3-562, 3-574, ..... 3-576, 3-599, 3-609, 3-615
Status access to PCMCIA card ..... 3-706
Status array for the wait marker ..... 3-537
Status encoder 1 driver ..... 3-695
Status encoder 2 driver ..... 3-696
Status information torque limitation ..... 3-503, 3-597
Status of axis container ..... 3-520
Status of block SPARPI ..... 3-560
Status of ForceControl function ..... 3-495, 3-589
Status of output drivers ..... 3-695
Status of power enable ..... 3-503, 3-597
Status of slots ..... 3-702
Status of the auxiliary function ..... 3-574
Status of the global start disable ..... 3-542
Status slave axis with lead value coupling ..... 3-488, ..... 3-582
stepEditorFormName ..... 3-554
STICTION_COMP_THRESHOLD
MD 5233 ..... 2-158
STICTION_FORCE_NEG
MD 5235 ..... 2-158
STICTION_FORCE_POS
MD 5234 ..... 2-158
STICTION_SPEED_THRESHOLD
MD 5232 ..... 2-158
STIFFNESS_CONTROL_CONFIG:MD 32642 ..... 2-354
STIFFNESS_CONTROL_ENABLE:MD 32640 ..... 2-354
STIFFNESS_DELAY_TIME:MD 32644 ..... 2-354
Stop in curr.progr.area is effect.after a delay ..... 3-536
Stop on another axis ..... 3-501, 3-595
Stop run active ..... 3-544
STOP_CUTCOM_STOPRE:MD 42480 ..... 2-402
STOP_LIMIT_COARSE:MD 36000 ..... 2-366
STOP_LIMIT_FACTOR:MD 36012 ..... 2-366
STOP_LIMIT_FINE:MD 36010 ..... 2-366
STOP_MODE_MASK:MD 11550 ..... 2-241
STOP_ON_CLAMPING:MD 36052 ..... 2-367
stopCond ..... 3-543
stopCondPar ..... 3-544
stopRunActive ..... 3-544
stopRunCounter ..... 3-544
stopTriggerLock ..... 3-715
Stored axial dist.-to-go in WCS after DELDTG ... 3-601
Stored distance-to-go of the path in the WCS .... 3-520
Strategy wear group ..... 3-637
STROKE_CHECK_INSIDE:MD 22900 ..... 2-305
strokeNr ..... 3-571
Strokes per minute ..... 3-570
STS_CONFIG
MD 1003 ..... 2-84
MD 5003 ..... 2-154
Subroutine call counter, desired value ..... 3-556
subSpec ..... 3-502, 3-595, 3-606
Subspecification ..... 3-502, 3-595
Subspecification for indexing axis ..... 3-606
subType ..... 3-600
SUG programming active ..... 3-506, 3-509, 3-608, ..... 3-614
Sum of compensation values ..... 3-490, 3-584
Sum of current gross runtime ..... 3-694
Sum of current net runtime ..... 3-694
Sum of maximum gross runtime ..... 3-704
Sum of maximum net runtime ..... 3-704
Sum of minimum gross runtime ..... 3-705
Sum of minimum net runtimes ..... 3-705
Sum of the compensation values for encoder 1 3-495, 3-589
Sum of the compensation values for encoder 2 3-495, ..... 3-589
SUMCORR_DEFAULT:MD 20272 ..... 2-281
SUMCORR_RESET_VALUE:MD 20132 ... 2-277
Supplement to stopCond ..... 3-544
suppProgFunc ..... 3-544
SUPPRESS_ALARM_MASK:MD 11410 ... 2-239
SUPPRESS_SCREEN_REFRESH:MD 10131 ..... 2-214
Suppression of language commands ..... 3-544
suppressProtLock ..... 3-715
Sval ..... 3-565
SW_CAM_ASSIGN_FASTOUT_1:MD 10470 ..... 2-222
SW_CAM_ASSIGN_FASTOUT_2:MD 10471 ..... 2-222
SW_CAM_ASSIGN_FASTOUT_3:MD 10472 ..... 2-222
SW_CAM_ASSIGN_FASTOUT_4:MD 10473 ..... 2-223
SW_CAM_ASSIGN_TAB:MD 10450 ..... 2-222
SW_CAM_MINUS_LEAD_TIME:MD 10460 ..... 2-222
SW_CAM_MINUS_POS_TAB_1:MD 41500 ..... 2-395
SW_CAM_MINUS_POS_TAB_2:MD 41502 ..... 2-396
SW_CAM_MINUS_POS_TAB_3:MD 41504 ..... 2-396
SW_CAM_MINUS_POS_TAB_4:MD 41506 ..... 2-396
SW_CAM_MINUS_TIME_TAB_1:MD 41520 ..... 2-396
SW_CAM_MINUS_TIME_TAB_2:MD 41522 ..... 2-397
SW_CAM_MINUS_TIME_TAB_3:MD 41524 ..... 2-397
SW_CAM_MINUS_TIME_TAB_4:MD 41526 ..... 2-397
SW_CAM_MODE:MD 10485 ..... 2-223
SW_CAM_PLUS_LEAD_TIME:MD 10461 2-222
SW_CAM_PLUS_POS_TAB_1:MD 41501 2-395
SW_CAM_PLUS_POS_TAB_2:MD 41503 2-396
SW_CAM_PLUS_POS_TAB_3:MD 41505 2-396

© Siemens AG 2004 All Rights Reserved

SW_CAM_PLUS_POS_TAB_4:MD 41507 2-396
SW_CAM_PLUS_TIME_TAB_1:MD 415212-397
SW_CAM_PLUS_TIME_TAB_2:MD 415232-397
SW_CAM_PLUS_TIME_TAB_3:MD 415252-397
SW_CAM_PLUS_TIME_TAB_4:MD 415272-397
SW_CAM_TIMER_FASTOUT_MASK:MD 10480 ....2-223
SW_OPTIONS
MD 9990 ....2-205
SWITCH_SPD_OPEN_LOOP_AM
MD 1466 ....2-126
SWITCH_SPEED_MSD_AM
MD 1465 ....2-126
SWITCH_TO_AREA
MD 9016 ....2-170
swLicensePIN ....3-471
Synchronous run difference with sign....3-547
SYS_CLOCK_SYNC_TIME
MD 9013 ....2-170
SYSCLOCK_CYCLE_TIME:MD 10050 ....2-208
SYSCLOCK_SAMPL_TIME_RATIO:MD 10080 ....2-210
System frame bit screen form ....3-522
systemFrameMask ....3-439
sysTimeBCD ....3-471
sysTimeNCSC....3-471
sysTimeSinceStartup ....3-471
SZS setpoint value (C) incl. override components ....3-579
SZS setpoint value (N) incl. override components ....3-485

## T

T number ....3-533
T_M_ADDRESS_EXT_IS_SPINO:MD 20096 ....2-274
T_mapc [s,s,userdef]....3-699
T_NO_FCT_CYCLE_MODE:MD 10719 ....2-228
T_NO_FCT_CYCLE_NAME:MD 10717 ....2-228
TABULATOR_SIZE
MD 9007 ....2-169
Tadr ....3-565
TANG_OFFSET:MD 37402 ....2-391
Target location number new tool ....3-532
Target location number old tool ....3-532
Target magazine new tool....3-532
Target magazine old tool ....3-533
TARGET_BLOCK_INCR_PROG:MD 42444 ....2-401
tcCarr1 ....3-663
tcCarr10 ....3-663
tcCarr11 ....3-663
tcCarr12 ....3-663
tcCarr13 ....3-663
tcCarr14 ....3-663
tcCarr15 ....3-663
tcCarr16 ....3-664
tcCarr17 ....3-664
tcCarr18 ....3-664
tcCarr19 ....3-664
tcCarr2....3-664
tcCarr20....3-664
tcCarr21....3-664
tcCarr22....3-664
tcCarr23....3-664
tcCarr24....3-665
tcCarr25....3-665
tcCarr26....3-665
tcCarr27....3-665
tcCarr28....3-665
tcCarr29....3-665
tcCarr3....3-665
tcCarr30....3-665
tcCarr31....3-665
tcCarr32....3-666
tcCarr33....3-666
tcCarr34....3-666
tcCarr35....3-666
tcCarr36....3-666
tcCarr37....3-666
tcCarr38....3-666
tcCarr39....3-667
tcCarr4....3-667
tcCarr40....3-667
tcCarr41....3-667
tcCarr42....3-667
tcCarr43....3-667
tcCarr44....3-667
tcCarr45....3-667
tcCarr46....3-667
tcCarr5....3-667
tcCarr55....3-668
tcCarr56....3-668
tcCarr57....3-668
tcCarr58....3-668
tcCarr59....3-668
tcCarr6....3-668
tcCarr60....3-668
tcCarr64....3-668
tcCarr65....3-668
tcCarr7....3-668
tcCarr8....3-668
tcCarr9....3-669
TEACH_MODE
MD 9026....2-170
TECHNOLOGY
MD 9020....2-170
TECHNOLOGY_MODE:MD 27800....2-328
TEMP_COMP_ABS_VALUE:MD 43900....2-412
TEMP_COMP_REF_POSITION:MD 43920 ....2-412
TEMP_COMP_SLOPE:MD 43910....2-412
TEMP_COMP_TYPE:MD 32750....2-355
TERMINAL_STATE
MD 1700 ....2-140
MD 5700 ....2-166
terminalState ....3-621, 3-623
TEST_ROTORPOS_IDENT
MD 1736 ....2-146
Text for logging buffer....3-438
textIndex ....3-476, 3-478, 3-480

© Siemens AG 2004 All Rights Reserved

T-function value ..... 3-566
THREAD_RAMP_DISP:MD 42010 ..... 2-398
THREAD_START_ANGLE:MD 42000 ..... 2-398
threadPitch ..... 3-544
threadPitchS ..... 3-544
Ti [s,s,userdef] ..... 3-699
Time ..... 3-471
Time after a block change in IPO cycles ..... 3-545
Time after a block change in seconds ..... 3-545
Time base ..... 3-715
Time from begin. of block in interpolation cycles 3-528
Time from the beginning of the block in seconds 3-528
Time since default boot ..... 3-706
Time since NCK ramp-up ..... 3-471
Time since normal boot ..... 3-706
Time stamp ..... 3-476, 3-478, 3-480
Time variable in seconds ..... 3-528
TIME_LIMIT_NETTO_COM_TASK:MD 10130 ... ..... 2-214
TIME_LIMIT_NETTO_DRIVE_TASK:MD 10140 ..... 2-214
timeBCD ..... 3-476, 3-478, 3-480
timeOrRevolDwell ..... 3-545
timePeriod ..... 3-715
timeS ..... 3-545
timeSC ..... 3-545
TM_ACT_SEARCH_AND_POS
MD 9433 ..... 2-183
TM_DEFAULT_DELETE_TOOL
MD 9419 ..... 2-181
TM_DEFAULT_TOOLPLACESPEC
MD 9415 ..... 2-181
TM_DEFAULT_TOOLSIZE
MD 9412 ..... 2-181
TM_DEFAULT_TOOLSTATE
MD 9417 ..... 2-181
TM_DEFAULT_TOOLTYPE
MD 9416 ..... 2-181
TM_KIND_OF_TOOLMANAGEMENT
MD 9414 ..... 2-181
TM_LOAD_LOC1
MD 9434 ..... 2-183
TM_LOAD_LOC2
MD 9435 ..... 2-183
TM_LOAD_LOC3
MD 9436 ..... 2-183
TM_LOAD_LOC4
MD 9437 ..... 2-183
TM_LOAD_LOC5
MD 9438 ..... 2-183
TM_LOAD_PLACE
MD 9410 ..... 2-181
TM_LOAD_TOOL_NEW
MD 9431 ..... 2-183
TM_NUM_MAG
MD 9411 ..... 2-181
TM_TOOL_STATE_DEF_VAL
MD 9432 ..... 2-183
TM_UNLOAD_AND_DELETE
MD 9430 ..... 2-182
T-number ..... 3-647
TnumWZV ..... 3-646
To [s,s,userdef] ..... 3-700
TO_MAG_PLACE_DISTANCE
MD 9479 ..... 2-184
TO_OPTION_MASK
MD 9478 ..... 2-184
TO_TRACE
MD 9477 ..... 2-184
TOCARR_BASE_FRAME_NUMBER:MD 20184 ..... 2-279
TOCARR_CHANGE_M_CODE:MD 22530 ..... ..... 2-302
TOCARR_FINE_CORRECTION:MD 42974 ..... ..... 2-407
TOCARR_FINE_LIM_LIN:MD 20188 ..... 2-279
TOCARR_FINE_LIM_ROT:MD 20190 ..... 2-279
TOCARR_ROT_ANGLE_INCR:MD 20180 2-278
TOCARR_ROT_ANGLE_OFFSET:MD 20182 .... ..... 2-279
TOCARR_ROT_OFFSET_FROM_FR:MD 21186 ..... 2-293
TOFF_ACCEL:MD 21196 ..... 2-293
TOFF_LIMIT:MD 42970 ..... 2-407
TOFF_MODE:MD 21190 ..... 2-293
TOFF_VELO:MD 21194 ..... 2-293
TOFRAME_MODE:MD 42980 ..... 2-407
toNo ..... 3-439
Tool adapter number ..... 3-530
Tool base distance-to-go ..... 3-482, 3-576, 3-600
Tool base position ..... 3-481, 3-598
Tool base position setpoint ..... 3-481
Tool base REPOS ..... 3-482, 3-576, 3-600
Tool carrier status ..... 3-540
Tool edge number ..... 3-523
Tool identifier ..... 3-627, 3-647, 3-661
Tool information for MMC ..... 3-627
Tool length ..... 3-525
Tool number ..... 3-525
Tool operating time ( in seconds ). ..... 3-707
Tool orientation ..... 3-541
Tool search strategy during tool change ..... 3-640
Tool setting ..... 3-525
Tool state ..... 3-629
TOOL_CARRIER_RESET_VALUE:MD 20126.... ..... 2-277
TOOL_CHANGE_ERROR_MODE:MD 22562 .... ..... 2-302
TOOL_CHANGE_M_CODE:MD 22560 ..... 2-302
TOOL_CHANGE_MODE:MD 22550 ..... 2-302
TOOL_CHANGE_TIME:MD 10190 ..... 2-215
TOOL_CORR_MODE_G43G44:MD 20380 ..... ..... 2-282
TOOL_CORR_MOVE_MODE:MD 20382 .. 2-283
TOOL_CORR_MULTIPLE_AXES:MD 20384 ..... ..... 2-283
TOOL_DATA_CHANGE_COUNTER:MD 17530 ..... 2-253
TOOL_DEFAULT_DATA_MASK:MD 17520 ..... ..... 2-253
TOOL_GRIND_AUTO_TMON:MD 20350 .. 2-282
TOOL_LENGTH_CONST:MD 42940 ..... 2-406

© Siemens AG 2004 All Rights Reserved

TOOL_LENGTH_TYPE:MD 42950.....2-406
TOOL_MANAGEMENT_MASK:MD 20310 .....
.....2-282
TOOL_MANAGEMENT_TOOLHOLDER:MD
20124.....2-276
TOOL_OFFSET_DRF_ON:MD 20396.....2-283
TOOL_OFFSET_INCR_PROG:MD 42442.2-401
TOOL_PARAMETER_DEF_MASK:MD 20360....
.....2-282
TOOL_PRESEL_RESET_VALUE:MD 20121 .....
.....2-276
TOOL_REF_GEO_AXIS1
MD 9400 .....2-180
TOOL_REF_GEO_AXIS2
MD 9401 .....2-181
TOOL_REF_GEO_AXIS3
MD 9402 .....2-181
TOOL_RESET_NAME:MD 20122 .....2-276
TOOL_RESET_VALUE:MD 20120.....2-276
TOOL_TEMP_COMP:MD 42960.....2-406
TOOL_TEMP_COMP_LIMIT:MD 20392 ....2-283
TOOL_TEMP_COMP_ON:MD 20390 .....2-283
TOOL_TIME_MONITOR_MASK:MD 20320.....
.....2-282
TOOL_UNLOAD_MASK:MD 17510 .....2-253
toolBaseDistToGo.....3-482, 3-576, 3-600
toolBaseREPOS.....3-482, 3-576, 3-600
toolChangeMfunc .....3-434
toolCounter .....3-545
toolCounterC.....3-545
toolCounterM .....3-545
toolEdgeCenterDistToGo.....3-600
toolEdgeCenterREPOS.....3-600
Toolholder name.....3-666
Toolholder number of solutions .....3-540
toolHolderData .....3-546
toolIdent .....3-627, 3-647, 3-661
toolInfo .....3-627
toolInMag.....3-628, 3-647, 3-661
toolInPlace.....3-628, 3-647, 3-661
toolMon .....3-628
toolMyMag .....3-628
toolMyPlace .....3-628
toolNo..... 3-647, 3-662
toolplace_spec .....3-628
toolSearch .....3-628
toolsize_down .....3-628
toolsize_left.....3-629
toolsize_right.....3-629
toolsize_upper.....3-629
toolState .....3-629
TOOLTYPES_ALLOWED:MD 17540 .....2-254
torqLimit ..... 3-502, 3-596
Torque limitation value ..... 3-502, 3-596
TORQUE_CURRENT_RATIO
MD 1113 .....2-93
TORQUE_FILTER_FREQUENCY
MD 1252 .....2-111
TORQUE_LIMIT_1
MD 1230 .....2-107
TORQUE_LIMIT_2
MD 1231 .....2-108
TORQUE_LIMIT_ADAPT_SERVO
MD 1191 ..... 2-102
TORQUE_LIMIT_FOR_SETUP
MD 1239 ..... 2-109
TORQUE_LIMIT_FROM_NC
MD 1190 ..... 2-102
TORQUE_LIMIT_GENERATOR
MD 1233 ..... 2-108
TORQUE_LIMIT_SWITCH_HYST
MD 1234 ..... 2-108
TORQUE_LIMIT_SWITCH_SPEED
MD 1232 ..... 2-108
TORQUE_LIMIT_WEIGHT
MD 1192 ..... 2-102
TORQUE_LSB
MD 1713 ..... 2-143
TORQUE_OFFSET:MD 32460 ..... 2-352
TORQUE_SMOOTH_TIME_AM
MD 1459 ..... 2-126
TORQUE_THRESHOLD_X
MD 1428 ..... 2-125
TORQUE_THRESHOLD_X_DELAY
MD 1429 ..... 2-125
Total axial override f. motion-synchronous actions.....
..... 3-582
total DRAM in bytes ..... 3-472
Total length in bytes PCMCIA card ..... 3-705
Total number of real magazine locations ..... 3-636
Total number total offsets in NCK ..... 3-429
Total of all machined workpieces ..... 3-546
Total override for motion-synchronous actions .. 3-488
Total path override for synchronized actions ..... 3-529
Total runtime NC programs ..... 3-709
Total travel path of an axis ..... 3-489, 3-583
Total travel path of an axis at high speed..... 3-489,
..... 3-583
Total traverse processes of an axis..... 3-488, 3-582
Total traverse processes of an axis at high speed .....
..... 3-489, 3-583
Total traverse processes of an axis with jerk.... 3-485,
..... 3-579
Total traverse time of an axis ..... 3-489, 3-583
Total traverse time of an axis at high speed ..... 3-489,
..... 3-583
Total traverse time of an axis with jerk... 3-485, 3-579
Total user memory in bytes ..... 3-472
Total value of overlaid motion..... 3-487, 3-581
totalDirectorys ..... 3-472
totalFiles ..... 3-472
totalMem ..... 3-472
totalMemDram ..... 3-472
totalMemDram2PassF ..... 3-472
totalMemDramPassF ..... 3-472
totalMemFfs ..... 3-472
totalMemSramPassF ..... 3-472
totalParts ..... 3-546
totalProtokolFiles ..... 3-472
Touch probe has switched ..... 3-522
TPreSelAdr ..... 3-565
TPreSelVal ..... 3-566
TRAANG_ANGLE_1:MD 24700..... 2-320
TRAANG_ANGLE_2:MD 24750..... 2-321
TRAANG_BASE_TOOL_1:MD 24710 ..... 2-320

© Siemens AG 2004 All Rights Reserved

TRAANG_BASE_TOOL_2:MD 24760 .....2-321
TRAANG_PARALLEL_ACCEL_RES_1:MD 24721 .....2-320
TRAANG_PARALLEL_ACCEL_RES_2:MD 24771 .....2-321
TRAANG_PARALLEL_VELO_RES_1:MD 24720 .....2-320
TRAANG_PARALLEL_VELO_RES_2:MD 24770 .....2-321
TRACE
MD 9999 .....2-205
TRACE_COMPRESSOR_OUTPUT:MD 22800 .. .....2-305
TRACE_SCOPE_MASK:MD 22708 .....2-304
TRACE_SELECT:MD 11400 .....2-239
TRACE_STARTTRACE_EVENT:MD 22700 ..... .....2-303
TRACE_STARTTRACE_STEP:MD 22702.2-304
TRACE_STOPTRACE_EVENT:MD 22704 2-304
TRACE_STOPTRACE_STEP:MD 22706...2-304
TRACE_VARIABLE_INDEX:MD 22712 .....2-304
TRACE_VARIABLE_NAME:MD 22710 .....2-304
TRACE_VDI_AX:MD 31600.....2-347
traceProtocolActive .....3-472
traceProtocolLock .....3-473
traceState1 ..... 3-502, 3-596
traceState2 ..... 3-502, 3-596
traceState3 ..... 3-502, 3-596
traceState4 ..... 3-502, 3-596
traceStopAction .....3-473
trackErrContr..... 3-503, 3-596
trackErrDiff..... 3-503, 3-596
TRACLG_CONTACT_LOWER_LIMIT:MD 21520.....2-297
TRACLG_CONTACT_UPPER_LIMIT:MD 21518 .....2-297
TRACLG_CTRLSPI_NR:MD 21524 .....2-297
TRACLG_CTRLSPI_VERT_OFFSET:MD 21502 .....2-296
TRACLG_G0_IS_SPECIAL:MD 21526 .....2-297
TRACLG_GRINDSPI_HOR_OFFSET:MD 21501 .....2-295
TRACLG_GRINDSPI_NR:MD 21522 .....2-297
TRACLG_GRINDSPI_VERT_OFFSET:MD 21500.....2-295
TRACLG_HOR_DIR_SUPPORTAX_1:MD 21510.....2-296
TRACLG_HOR_DIR_SUPPORTAX_2:MD 21514.....2-296
TRACLG_SUPPORT_HOR_OFFSET:MD 21506 .....2-296
TRACLG_SUPPORT_LEAD_ANGLE:MD 21516 .....2-297
TRACLG_SUPPORT_VERT_OFFSET:MD 21504.....2-296
TRACLG_VERT_DIR_SUPPORTAX_1:MD 21508.....2-296
TRACLG_VERT_DIR_SUPPORTAX_2:MD 21512.....2-296
TRACON_CHAIN_1:MD 24995 .....2-324
TRACON_CHAIN_2:MD 24996 .....2-324
TRACON_CHAIN_3:MD 24997 ..... 2-324
TRACON_CHAIN_4:MD 24998 ..... 2-324
TRACYL_BASE_TOOL_1:MD 24820 ..... 2-322
TRACYL_BASE_TOOL_2:MD 24870 ..... 2-322
TRACYL_DEFAULT_MODE_1:MD 24808 2-321
TRACYL_DEFAULT_MODE_2:MD 24858 2-322
TRACYL_ROT_AX_FRAME_1:MD 24805 2-321
TRACYL_ROT_AX_FRAME_2:MD 24855 2-322
TRACYL_ROT_AX_OFFSET_1:MD 248002-321
TRACYL_ROT_AX_OFFSET_2:MD 248502-322
TRACYL_ROT_SIGN_IS_PLUS_1:MD 24810.... ..... 2-322
TRACYL_ROT_SIGN_IS_PLUS_2:MD 24860.... ..... 2-322
TRAFO_AXES_IN_1:MD 24110 ..... 2-308
TRAFO_AXES_IN_10:MD 24482 ..... 2-314
TRAFO_AXES_IN_2:MD 24210 ..... 2-308
TRAFO_AXES_IN_3:MD 24310 ..... 2-309
TRAFO_AXES_IN_4:MD 24410 ..... 2-310
TRAFO_AXES_IN_5:MD 24432 ..... 2-310
TRAFO_AXES_IN_6:MD 24442 ..... 2-311
TRAFO_AXES_IN_7:MD 24452 ..... 2-312
TRAFO_AXES_IN_8:MD 24462 ..... 2-312
TRAFO_AXES_IN_9:MD 24472 ..... 2-313
TRAFO_CHANGE_M_CODE:MD 22534... 2-302
TRAFO_GEOAX_ASSIGN_TAB_1:MD 24120.... ..... 2-308
TRAFO_GEOAX_ASSIGN_TAB_10:MD 24484 ..... 2-314
TRAFO_GEOAX_ASSIGN_TAB_2:MD 24220.... ..... 2-308
TRAFO_GEOAX_ASSIGN_TAB_3:MD 24320.... ..... 2-309
TRAFO_GEOAX_ASSIGN_TAB_4:MD 24420.... ..... 2-310
TRAFO_GEOAX_ASSIGN_TAB_5:MD 24434.... ..... 2-310
TRAFO_GEOAX_ASSIGN_TAB_6:MD 24444.... ..... 2-311
TRAFO_GEOAX_ASSIGN_TAB_7:MD 24454.... ..... 2-312
TRAFO_GEOAX_ASSIGN_TAB_8:MD 24464.... ..... 2-312
TRAFO_GEOAX_ASSIGN_TAB_9:MD 24474.... ..... 2-313
TRAFO_INCLUDES_TOOL_1:MD 24130 . 2-308
TRAFO_INCLUDES_TOOL_10:MD 24486 2-314
TRAFO_INCLUDES_TOOL_2:MD 24230 . 2-309
TRAFO_INCLUDES_TOOL_3:MD 24330 . 2-309
TRAFO_INCLUDES_TOOL_4:MD 24426 . 2-310
TRAFO_INCLUDES_TOOL_5:MD 24436 . 2-311
TRAFO_INCLUDES_TOOL_6:MD 24446 . 2-311
TRAFO_INCLUDES_TOOL_7:MD 24456 . 2-312
TRAFO_INCLUDES_TOOL_8:MD 24466 . 2-313
TRAFO_INCLUDES_TOOL_9:MD 24476 . 2-313
TRAFO_MODE_MASK:MD 20144 ..... 2-277
TRAFO_RESET_VALUE:MD 20140..... 2-277
TRAFO_TYPE_1:MD 24100 ..... 2-307
TRAFO_TYPE_10:MD 24480 ..... 2-313
TRAFO_TYPE_2:MD 24200 ..... 2-308
TRAFO_TYPE_3:MD 24300 ..... 2-309

© Siemens AG 2004 All Rights Reserved

TRAFO_TYPE_4:MD 24400 .....2-309
TRAFO_TYPE_5:MD 24430 .....2-310
TRAFO_TYPE_6:MD 24440 .....2-311
TRAFO_TYPE_7:MD 24450 .....2-311
TRAFO_TYPE_8:MD 24460 .....2-312
TRAFO_TYPE_9:MD 24470 .....2-313
TRAFO5_AXIS1_1:MD 24570 .....2-316
TRAFO5_AXIS1_2:MD 24670 .....2-319
TRAFO5_AXIS2_1:MD 24572 .....2-316
TRAFO5_AXIS2_2:MD 24672 .....2-319
TRAFO5_AXIS3_1:MD 24573 .....2-316
TRAFO5_AXIS3_2:MD 24673 .....2-319
TRAFO5_BASE_ORIENT_1:MD 24574 .....2-316
TRAFO5_BASE_ORIENT_2:MD 24674 .....2-319
TRAFO5_BASE_TOOL_1:MD 24550 .....2-315
TRAFO5_BASE_TOOL_2:MD 24650 .....2-318
TRAFO5_JOINT_OFFSET_1:MD 24560 ...2-315
TRAFO5_JOINT_OFFSET_2:MD 24660 ...2-318
TRAFO5_JOINT_OFFSET_PART_1:MD 24558 .....2-315
TRAFO5_JOINT_OFFSET_PART_2:MD 24658 .....2-318
TRAFO5_NON_POLE_LIMIT_1:MD 24530 ..... .....2-314
TRAFO5_NON_POLE_LIMIT_2:MD 246302-317
TRAFO5_NUTATOR_AX_ANGLE_1:MD 24564 .....2-315
TRAFO5_NUTATOR_AX_ANGLE_2:MD 24664 .....2-318
TRAFO5_NUTATOR_VIRT_ORIAX_1:MD 24566.....2-316
TRAFO5_NUTATOR_VIRT_ORIAX_2:MD 24666.....2-319
TRAFO5_ORIAX_ASSIGN_TAB_1:MD 24585 ... .....2-317
TRAFO5_ORIAX_ASSIGN_TAB_2:MD 24685 ... .....2-320
TRAFO5_PART_OFFSET_1:MD 24500 ....2-314
TRAFO5_PART_OFFSET_2:MD 24600 ....2-317
TRAFO5_POLE_LIMIT_1:MD 24540 .....2-315
TRAFO5_POLE_LIMIT_2:MD 24640 .....2-318
TRAFO5_ROT_AX_OFFSET_1:MD 245102-314
TRAFO5_ROT_AX_OFFSET_2:MD 246102-317
TRAFO5_ROT_OFFSET_FROM_FR_1:MD 24590.....2-317
TRAFO5_ROT_OFFSET_FROM_FR_2:MD 24690.....2-320
TRAFO5_ROT_SIGN_IS_PLUS_1:MD 24520.... .....2-314
TRAFO5_ROT_SIGN_IS_PLUS_2:MD 24620.... .....2-317
TRAFO5_TCARR_NO_1:MD 24582 .....2-317
TRAFO5_TCARR_NO_2:MD 24682 .....2-320
TRAFO5_TOOL_ROT_AX_OFFSET_1:MD 24562.....2-315
TRAFO5_TOOL_ROT_AX_OFFSET_2:MD 24662.....2-318
TRAFO5_TOOL_VECTOR_1:MD 24580 ...2-316
TRAFO5_TOOL_VECTOR_2:MD 24680 ...2-319
TRAFO6_BASE_ORIENT_NORMAL_1:MD 24576.....2-316
TRAFO6_BASE_ORIENT_NORMAL_2:MD 24676 ..... 2-319
TRAFO6_JOINT_OFFSET_2_3_1:MD 24561..... ..... 2-315
TRAFO6_JOINT_OFFSET_2_3_2:MD 24661..... ..... 2-318
transfActive ..... 3-546
Transformation active ..... 3-546
Transformed edge offset value (cuttEdgeParam)3-677
Transformed edge offset value (edgeData) ..... 3-677
Transformed location-dependent setup offset ... 3-671
Transformed location-dependent wear offset .... 3-675
Translation ..... 3-573
Translation of a settable frame .3-512, 3-513, 3-572, 3-611
Translation of an active frame ..... 3-511, 3-617
Translation of an external frame ..... 3-618
Translation reference system ..... 3-547
TRANSMIT_BASE_TOOL_1:MD 24920.... 2-323
TRANSMIT_BASE_TOOL_2:MD 24970.... 2-324
TRANSMIT_POLE_SIDE_FIX_1:MD 24911 ..... ..... 2-323
TRANSMIT_POLE_SIDE_FIX_2:MD 24961 ..... ..... 2-324
TRANSMIT_ROT_AX_FRAME_1:MD 24905..... ..... 2-323
TRANSMIT_ROT_AX_FRAME_2:MD 24955..... ..... 2-323
TRANSMIT_ROT_AX_OFFSET_1:MD 24900 .... ..... 2-323
TRANSMIT_ROT_AX_OFFSET_2:MD 24950 .... ..... 2-323
TRANSMIT_ROT_SIGN_IS_PLUS_1:MD 24910 ..... 2-323
TRANSMIT_ROT_SIGN_IS_PLUS_2:MD 24960 ..... 2-324
Transmitted message frame..... 3-703
transSys..... 3-547
Traversing direction..... 3-536
trialRunActive ..... 3-550
TU_NAME:MD 10672..... 2-226
turnState ..... 3-507, 3-510, 3-610, 3-616
Tval ..... 3-566
type .....3-503, 3-574, 3-597, 3-606, 3-710
Type and state of the synchronous action..... 3-566, ..... 3-567
Type of actual value sensing ..... 3-685
Type of D-number programming ..... 3-434
Type of setpoint output ..... 3-685
Type of the active block in the interpolator ..... 3-533
Type of the auxiliary function ..... 3-574
Type of the magazine ..... 3-640
Type of tool monitoring ..... 3-628
Type of tool search..... 3-637
Type of tool search for replacement tools ..... 3-628
typeOfCuttingEdge..... 3-434
typStatus.....3-566, 3-567

© Siemens AG 2004 All Rights Reserved

## U


UF_MODE_DELTA_FREQUENCY
MD 1662 ....2-139
UF_MODE_ENABLE
MD 1014 ....2-86
UF_MODE_FREQUENCY
MD 1660 ....2-139
UF_MODE_RAMP_TIME_1
MD 1125 ....2-95
UF_MODE_RAMP_TIME_2
MD 1126 ....2-96
UF_MODE_RATIO
MD 1661 ....2-139
UF_VOLTAGE_AT_F0
MD 1127 ....2-96
Unique hardware number of the NCU ....3-461
Unique hardware number of the NCU (long) ....3-461
unit ....3-710
Unit for service values of the drives ..... 3-497, 3-591
Unit of axial feedrate ....3-604
Unit of measurement ....3-524
Unit of the axis-specific feedrate ..... 3-491, 3-585
UNLOCK_EDIT_MODESWITCH:MD 10780 ..... ....2-229
Upload buffer for display blocks ....3-551
UPLOAD_MD_CHANGES_ONLY:MD 11210 ..... ....2-234
Upper boundary of protection zone, applicate ....3-451
Upper limit nth polynominal for synchronous action ..... ....3-522
Upper limit of protection zone, applicate ....3-444
USE_CHANNEL_DISPLAY_DATA
MD 9014 ....2-170
Used DRAM in bytes ....3-473
Used memory in bytes ....3-473
usedDirectorys ....3-473
usedFiles ....3-473
usedMem ....3-473
usedMemDram ....3-473
usedMemDram2PassF ....3-473
usedMemDramPassF ....3-473
usedMemFfs ....3-473
usedMemSramPassF ....3-473
usedOptionsNotLicensed ....3-474
usedProtokolFiles ....3-474
USEKT_RESET_VALUE:MD 20123 ....2-276
User data for monitoring a cutting edge ....3-658
User unit table ....3-434
USER_BEGIN_WRITE_RPA_1
MD 9232 ....2-175
USER_BEGIN_WRITE_RPA_2
MD 9235 ....2-175
USER_BEGIN_WRITE_RPA_3
MD 9238 ....2-175
USER_CLASS_APPLICATION
MD 9272 ....2-178
USER_CLASS_BASE_ZERO_OFF_MA
MD 9248 ....2-176
USER_CLASS_BASE_ZERO_OFF_PA
MD 9247 ....2-176
USER_CLASS_CLEAR_RPA
MD 9221 .... 2-174
USER_CLASS_DIRECTORY_CHG
MD 9509 .... 2-185
USER_CLASS_DIRECTORY1_M
MD 9516 .... 2-185
USER_CLASS_DIRECTORY1_P
MD 9510 .... 2-185
USER_CLASS_DIRECTORY2_M
MD 9517 .... 2-185
USER_CLASS_DIRECTORY2_P
MD 9511 .... 2-185
USER_CLASS_DIRECTORY3_M
MD 9518 .... 2-185
USER_CLASS_DIRECTORY3_P
MD 9512 .... 2-185
USER_CLASS_DIRECTORY4_M
MD 9519 .... 2-185
USER_CLASS_DIRECTORY4_P
MD 9513 .... 2-185
USER_CLASS_INCH_METRIC
MD 9182 .... 2-172
USER_CLASS_OVERSTORE_HIGH
MD 9213 .... 2-173
USER_CLASS_PRESET
MD 9220 .... 2-174
USER_CLASS_READ_BD
MD 9230 .... 2-175
USER_CLASS_READ_CST
MD 9225 .... 2-174
USER_CLASS_READ_CUS
MD 9226 .... 2-174
USER_CLASS_READ_DEF
MD 9229 .... 2-174
USER_CLASS_READ_GUD_LUD
MD 9211 .... 2-173
USER_CLASS_READ_IN
MD 9224 .... 2-174
USER_CLASS_READ_PROGRAM
MD 9216 .... 2-173
USER_CLASS_READ_SYF
MD 9228 .... 2-174
USER_CLASS_READ_TCARR
MD 9180 .... 2-172
USER_CLASS_READ_TOA
MD 9200 .... 2-172
USER_CLASS_SELECT_PROGRAM
MD 9218 .... 2-174
USER_CLASS_SET_V24
MD 9223 .... 2-174
USER_CLASS_SHOW_SBL2
MD 9227 .... 2-174
USER_CLASS_SYS_ZERO_OFF
MD 9246 .... 2-176
USER_CLASS_TEACH_IN
MD 9219 .... 2-174
USER_CLASS_TM_SKACTPLACE
MD 9270 .... 2-177
USER_CLASS_TM_SKFINDPLACE
MD 9269 .... 2-177
USER_CLASS_TM_SKLDTOOLDAT
MD 9271 .... 2-178


© Siemens AG 2004 All Rights Reserved

USER_CLASS_TM_SKMGBUFFER
MD 9260 ....2-177
USER_CLASS_TM_SKMGFIND
MD 9261 ....2-177
USER_CLASS_TM_SKMGLISTPOS
MD 9262 ....2-177
USER_CLASS_TM_SKMGLREPR2
MD 9256 ....2-176
USER_CLASS_TM_SKMGLREPR3
MD 9257 ....2-177
USER_CLASS_TM_SKMGNEXT
MD 9263 ....2-177
USER_CLASS_TM_SKNCDELTOOL
MD 9259 ....2-177
USER_CLASS_TM_SKNCNEWTOOLE
MD 9258 ....2-177
USER_CLASS_TM_SKTLLIST
MD 9251 ....2-176
USER_CLASS_TM_SKTLLREPR1
MD 9265 ....2-177
USER_CLASS_TM_SKTLLREPR2
MD 9266 ....2-177
USER_CLASS_TM_SKTLLREPR3
MD 9267 ....2-177
USER_CLASS_TM_SKTLNEWTOOL
MD 9264 ....2-177
USER_CLASS_TM_SKTOOLLOAD
MD 9252 ....2-176
USER_CLASS_TM_SKTOOLMOVE
MD 9254 ....2-176
USER_CLASS_TM_SKTOOLUNLOAD
MD 9253 ....2-176
USER_CLASS_VERT_MODE_SK
MD 9249 ....2-176
USER_CLASS_WRITE_FINE
MD 9203 ....2-172
USER_CLASS_WRITE_GUD_LUD
MD 9212 ....2-173
USER_CLASS_WRITE_MAG_WGROUP
MD 9208 ....2-173
USER_CLASS_WRITE_PRG_CONDIT
MD 9214 ....2-173
USER_CLASS_WRITE_PROGRAM
MD 9217 ....2-174
USER_CLASS_WRITE_RPA
MD 9222 ....2-174
USER_CLASS_WRITE_RPA_1
MD 9231 ....2-175
USER_CLASS_WRITE_RPA_2
MD 9234 ....2-175
USER_CLASS_WRITE_RPA_3
MD 9237 ....2-175
USER_CLASS_WRITE_SEA
MD 9215 ....2-173
USER_CLASS_WRITE_TCARR
MD 9181 ....2-172
USER_CLASS_WRITE_TOA_ADAPT
MD 9209 ....2-173
USER_CLASS_WRITE_TOA_ASSDNO
MD 9207 ....2-173
USER_CLASS_WRITE_TOA_EC
MD 9205 .... 2-173
USER_CLASS_WRITE_TOA_GEO
MD 9201 .... 2-172
USER_CLASS_WRITE_TOA_NAME
MD 9240 .... 2-175
USER_CLASS_WRITE_TOA_SC
MD 9204 .... 2-173
USER_CLASS_WRITE_TOA_SUPVIS
MD 9206 .... 2-173
USER_CLASS_WRITE_TOA_TYPE
MD 9241 .... 2-175
USER_CLASS_WRITE_TOA_WEAR
MD 9202 .... 2-172
USER_CLASS_WRITE_ZOA
MD 9210 .... 2-173
USER_DATA_FLOAT:MD 14514 .... 2-252
USER_DATA_HEX:MD 14512 .... 2-252
USER_DATA_INT:MD 14510 .... 2-252
USER_DATA_PLC_ALARM:MD 14516 .... 2-252
USER_END_WRITE_RPA_1
MD 9233 .... 2-175
USER_END_WRITE_RPA_2
MD 9236 .... 2-175
USER_END_WRITE_RPA_3
MD 9239 .... 2-175
USER_WRITE_CYCFRAME
MD 9186 .... 2-172
USER_WRITE_EXTFRAME
MD 9188 .... 2-172
USER_WRITE_PARTFRAME
MD 9184 .... 2-172
USER_WRITE_TOOLFRAME
MD 9183 .... 2-172
USER_WRITE_TRAFRAME
MD 9187 .... 2-172
USER_WRITE_WPFRAME
MD 9185 .... 2-172
userData .... 3-656, 3-658
User-defined cutting edge parameter .... 3-633
User-defined tool parameters .... 3-632
userPlaceData .... 3-657
userScale .... 3-434
Utilization .... 3-623

## V

V24_PG_PC_BAUD
MD 9325 .... 2-180
V24_PG_PC_CONTROLS
MD 9323 .... 2-180
V24_PG_PC_DATABITS
MD 9326 .... 2-180
V24_PG_PC_EOF
MD 9322 .... 2-180
V24_PG_PC_LINE
MD 9329 .... 2-180
V24_PG_PC_PARITY
MD 9327 .... 2-180
V24_PG_PC_RTS
MD 9324 .... 2-180

© Siemens AG 2004 All Rights Reserved

V24_PG_PC_STOPBIT
MD 9328 ....2-180
V24_PG_PC_XOFF
MD 9321 ....2-180
V24_PG_PC_XON
MD 9320 ....2-180
V24_PRINTER_BAUD
MD 9315 ....2-179
V24_PRINTER_CONTROLS
MD 9313 ....2-179
V24_PRINTER_DATABITS
MD 9316 ....2-179
V24_PRINTER_EOF
MD 9312 ....2-179
V24_PRINTER_LINE
MD 9319 ....2-179
V24_PRINTER_PARITY
MD 9317 ....2-179
V24_PRINTER_RTS
MD 9314 ....2-179
V24_PRINTER_STOPBIT
MD 9318 ....2-179
V24_PRINTER_XOFF
MD 9311 ....2-179
V24_PRINTER_XON
MD 9310 ....2-179
V24_USER_BAUD
MD 9305 ....2-178
V24_USER_CONTROLS
MD 9303 ....2-178
V24_USER_DATABITS
MD 9306 ....2-178
V24_USER_EOF
MD 9302 ....2-178
V24_USER_LINE
MD 9309 ....2-179
V24_USER_PARITY
MD 9307 ....2-178
V24_USER_RTS
MD 9304 ....2-178
V24_USER_STOPBIT
MD 9308 ....2-178
V24_USER_XOFF
MD 9301 ....2-178
V24_USER_XON
MD 9300 ....2-178
vaDistTorque.... 3-503, 3-597
vaDpActTel ....3-474
vaDpe.... 3-503, 3-597
vaEgSyncDiff ....3-547
vaEgSyncDiffS ....3-547
vaIm .... 3-503, 3-597
vaIm1 .... 3-503, 3-597
vaIm2 .... 3-503, 3-597
Validity bits ....3-526
Value of HW analog input ....3-456
Value of HW digital input ....3-459
Value of HW digital output ....3-460
Value of the current D-number ....3-564
Value of the E-function ....3-565
Value of the H-function ....3-565
Value of the M-function .... 3-565
Value of the preselected T-function .... 3-566
Value of the S-function. .... 3-565
Value of tthe superimposition in the tool directio 3-602
valueDo .... 3-574
valueLo .... 3-574
VALVE_CODE
MD 5106 .... 2-155
VALVE_CONFIGURATION
MD 5113 .... 2-156
VALVE_CYLINDER_CONNECTION
MD 5140 .... 2-156
VALVE_DAMPING
MD 5115 .... 2-156
VALVE_DUAL_GAIN_FLOW
MD 5110 .... 2-155
VALVE_DUAL_GAIN_VOLTAGE
MD 5111 .... 2-155
VALVE_ERROR_TIME
MD 5614 .... 2-164
VALVE_FLOW_FACTOR_A_B
MD 5112 .... 2-156
VALVE_ID_PARAMS1
MD 5648 .... 2-165
VALVE_ID_PARAMS2
MD 5649 .... 2-165
VALVE_NATURAL_FREQUENCY
MD 5114 .... 2-156
VALVE_NOMINAL_FLOW
MD 5107 .... 2-155
VALVE_NOMINAL_PRESSURE
MD 5108 .... 2-155
VALVE_NOMINAL_VOLTAGE
MD 5109 .... 2-155
Variable incremental value for JOG mode..... 3-686
varIncrVal....3-482, 3-576, 3-600
vaTorqueAtLimit....3-503, 3-597
vaVactm....3-504, 3-597
VDI_FUNCTION_MASK:MD 17900 .... 2-254
VDI_UPDATE_IN_ONE_IPO_CYCLE:MD 18000 .... 2-254
Vector circular plane block search .... 3-552
Vector of circular plane .... 3-552
VELO_FFW_WEIGHT:MD 32610 .... 2-354
Version of DP Master software .... 3-703
VERSION_INFO:MD 18040 .... 2-254
VOLTAGE_LSB
MD 1709 .... 2-141
MD 5709 .... 2-166

## W

WAB_CLEARANCE_TOLERANCE:MD 20204 2-280
WAB_MAXNUM_DUMMY_BLOCKS:MD 20202 .... 2-279
WALIM_GEOAX_CHANGE_MODE:MD 10604... .... 2-224
WCS setpoint value including override components..... .... 3-602
WEAR_SIGN:MD 42930 .... 2-406
WEAR_SIGN_CUTPOS:MD 42920 .... 2-406

© Siemens AG 2004 All Rights Reserved

WEAR_TRANSFORM:MD 42935.....2-406
WEIGHTING_FACTOR_FOR_SCALE:MD 22910.....2-305
Without function.....3-562
WORKAREA_CHECK_TYPE:MD 30800 ...2-344
WORKAREA_LIMIT_MINUS:MD 43430 ....2-410
WORKAREA_LIMIT_PLUS:MD 43420.....2-410
WORKAREA_MINUS_ENABLE:MD 434102-410
WORKAREA_PLUS_ENABLE:MD 43400..2-410
WORKAREA_WITH_TOOL_RADIUS:MD 21020 .....2-289
Working area limitation active in the negative dir..... .....3-688
Working area limitation active in the positive dir .3-688
Working area limitation in the negative direction..... .....3-688
Working area limitation in the positive direction..3-689
WORKING_PRESSURE
MD 5101 .....2-155
workPandProgName ..... 3-554, 3-557
Workpiece and program name ..... 3-554, 3-557
Workpiece measurement semaphore.....3-524
Workpiece name.....3-555, 3-558, 3-560, 3-563
Workpiece name abbreviated...3-554, 3-558, 3-560, ..... 3-563
Workpiece or tool-related protection zone .....3-446, .....3-453
Workpiece position angle.....3-526
Workpiece requirement .....3-541
workPName .....3-554, 3-558, 3-560, 3-563
workPNameLong.....3-555, 3-558, 3-560, 3-563
WPD_INI_MODE:MD 11280.....2-235
WRITE_TOA_FINE_LIMIT
MD 9450 .....2-183
WRITE_TOA_LIMIT_MASK
MD 9449 .....2-183
WRITE_ZOA_FINE_LIMIT
MD 9451 .....2-183

## X

x component of offset vector l1..... 3-663
x component of offset vector l2..... 3-667
x component of offset vector l3..... 3-663
x component of offset vector l4..... 3-664
x component of rotary axis v1..... 3-668
x component of rotary axis v2..... 3-663
X component of tool in WCS ..... 3-529
X_AXIS_IN_OLD_X_Z_PLANE:MD 21110 ..... ..... 2-291

## Y

y component of offset vector l1..... 3-664
y component of offset vector l2..... 3-667
y component of offset vector l3..... 3-664
y component of offset vector l4..... 3-664
y component of rotary axis v1..... 3-668
y component of rotary axis v2..... 3-663
Y component of tool in WCS ..... 3-529

## Z

z component of offset vector l1..... 3-665
z component of offset vector l2..... 3-668
z component of offset vector l3..... 3-664
z component of offset vector l4..... 3-664
z component of rotary axis v1..... 3-669
z component of rotary axis v2..... 3-663
Z component of tool in WCS..... 3-529
ZK1PO register image ..... 3-622
ZK1RES register image ..... 3-622

■

© Siemens AG 2004 All Rights Reserved

## Notes

© Siemens AG 2004 All Rights Reserved

Siemens AG

A&D MC BMS
P. O. Box 3180

D-91050 Erlangen

Federal Republic of Germany

Tel. +49 180 / 5050 – 222 [Hotline]

Fax +49 9131 / 98 – 2176 [Dokumentation]

E-Mail: motioncontrol.docu@erlf.siemens.de

**Suggestions**

**Corrections**

For Publication/Manual:

SINUMERIK 840D/840Di/810D SIMODRIVE 611 digital

Lists

Manufacturer/Service documentation

**From**

Name:

Company/Dept.

Address: _____

_____ _____

Telephone: _____ / _____

Telefax: _____ / _____

Lists

Order No.: 6FC5 297-7AB70-0BP1
10.04 Edition

Should you come across any printing errors when reading this publication, please notify us on this sheet. Suggestions for improvements are also welcome.

**Suggestions and/or corrections**

# Overview of documentation SINUMERIK 840D/840Di/810D (04.2004)

## General Documentation

- *SINUMERIK* 840D/810D — Brochure
- *SINUMERIK* 840D/840Di/ 810D/ — Catalog Ordering info. NC 60 ***)**
- *Safety Integrated* Application Manual — **Safety Interated** Application Manual

## User Documentation

- *SINUMERIK* 840D/810D/ FM–NC — **AutoTurn** – Short Guide – Programming/ Setup
- *SINUMERIK* 840D/840Di 810D — Operator's Guide **– HT 6**
- *SINUMERIK* 840D/840Di/ 810D — **Diagnostics–guide *)**
- *SINUMERIK* 840D/840Di/ 810D — **Operators Guide *)** – Short Guide – HMI Embedded – HMI Advanced

## User Documentation

- *SINUMERIK* 840D/840Di/ 810D — **Program. Guide** – Short Guide – Fundamentals ***)** – Advanced. ***)** – Cycles – Measuring Cycles – ISO Turning/Milling
- *SINUMERIK* 840D/810D — Operator's Guide – **ManualTurn** – Short Guide ManualTurn – **ShopMill** – Short Guide ShopMill – **ShopTurn** – Short Guide ShopTurn
- *SINUMERIK* 840Di — **Systemoverview**
- *SINUMERIK* 840D/840Di/ 810D — Lists **System Variables**

## Manufacturer/Service Documentation

- *SINUMERIK* — **Configuring** (HW) ***)** – 810D – 840D
- *SINUMERIK* 840D/840Di 810D — **Operator Components** (HW) ***)**
- *SINUMERIK* 840D/840Di/ 810D — Description of Functions – **ManualTurn** – **ShopMill** – **ShopTurn**

## Manufacturer/Service Documentation

- *SINUMERIK SIMODRIVE* 611D 840D/810D — Description of Functions **Synchronized Actions**
- *SINUMERIK* 840D/840Di/ 810D — Desription of Functions **Drive Functions*)**
- *SINUMERIK* 840D/840Di/ 810D — **Desciption of Functions** – Basic Machine ***)** – Extended Functions – Special Functions
- *SINUMERIK* 840D/810D — Desription of Functions **Tool Manage–ment**
- *SINUMERIK* 840D/810D — **Configuring Kit** HMI Embedded
- *SINUMERIK* 840D/810D — Description of Functions Operator Interface **OP 030**
- *SINUMERIK* 840D/810D — **MCIS** –Computer Link –Tool Data Information Sy stem –NC Data Management –NC Data Transfer –Tool Data Communication

## Manufacturer/Service Documentation

- *SINUMERIK SIMODRIVE* — Description of Functions SINUMERIK **Safety Integrated**
- *SINUMERIK* 840D — Description of Functions **Digitizing**
- *SINUMERIK SIMODRIVE* — **Installation & Start–up Guide. *)** – 810D – 840D/611D – HMI
- *SINUMERIK SIMODRIVE* 840D/840Di 810D 611D — **Lists*)**
- *SINUMERIK SIMODRIVE* 840D 611D — Description of Functions **Linear motor**
- *SINUMERIK SIMODRIVE* 840D 611D — Description of Functions **– Hydraulics Modules – Analog Modules**
- *MOTION CONTROL SYSTEMS* — **EMV** Guidelines

## Electronic Documentation

- *SINUMERIK SIMODRIVE* 840D/840Di/ 810D 611, Motoren — **DOC ON CD *)** The SINUMERIK System

## Manufacturer/Service Documentation

- *SINUMERIK* 840D/840Di/ 810D — Description of Functions **ISO–**Dialects for SINUMERIK
- *SINUMERIK* 840Di — **Manual** (HW + Installation and Start–up)
- *SINUMERIK* 840D/810D — Desription of Functions **Remote Diagnosis**
- *SINUMERIK* 840D/840Di/ 810D — **Manual @ Event**

***)** These documents are a minimum requirement

**Siemens AG**
Automation & Drives
Motion Control Systems
P. O. Box 3180, D – 91050 Erlangen
Germany

www.siemens.com/motioncontrol

© Siemens AG, 2004
Subject to change without prior notice.
Order No. 6FC5297-7AB70-0BP1

Printed in Germany