© Siemens AG 2018

SIEMENS

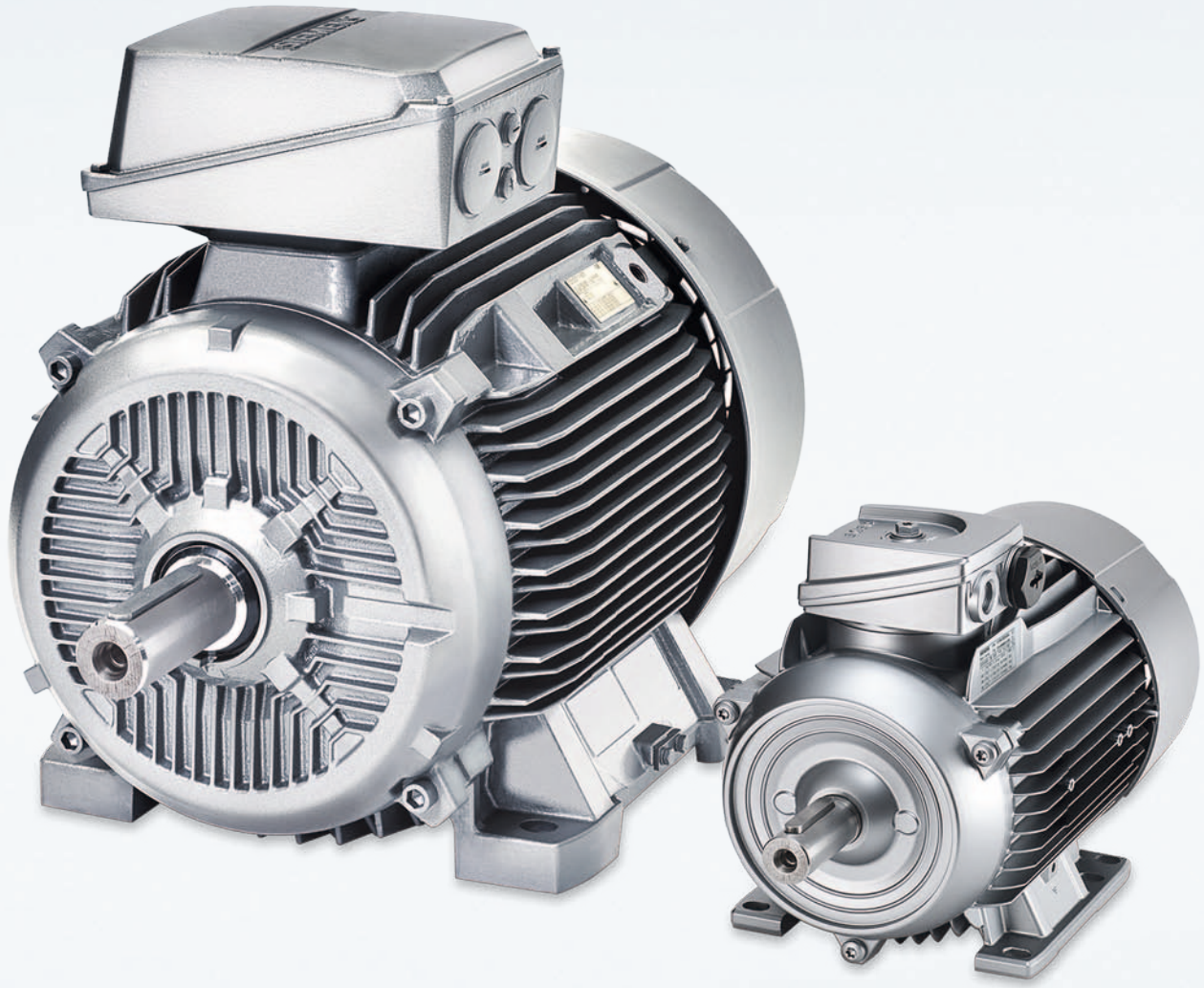

Motors

SIMOTICS GP, SD, XP, DP Low-Voltage Motors

Type series 1FP1, 1LE1, 1LE5, 1MB1 and 1PC1

Frame sizes 63 to 355 · Power range 0.09 to 500 kW

Catalog D 81.1

Edition 05/2018

siemens.com/drives

Промэлектроника, sales@prom-elec.com

© Siemens AG 2018

Related catalogs

LOHER Low-Voltage Motors D 83.1
Type series 1MD5, 1PS0, 1PS1, 1PS4 and 1PS5
Frame sizes 71 to 500
Power range 0.12 to 1400 kW

E86060-K5583-A111-A3-7600

SIMOTICS FD D 81.8
Low-Voltage Motors
Frame sizes 315 to 450
Power range 200 to 1800 kW

PDF (E86060-K5581-A181-A5-7600)

SIMOTICS NEMA Motors D 81.2
Low Voltage AC Motors
Selection and Pricing Guide

Further details available on the Internet at:
www.usa.siemens.com/motors

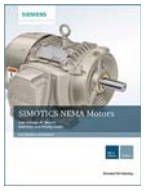

SINAMICS G130 D 11
Drive Converter Chassis Units
SINAMICS G150
Drive Converter Cabinet Units

E86060-K5511-A101-A6-7600

Motion Control Drives D 21.4
SINAMICS S120 and SIMOTICS

E86060-K5521-A141-A1-7600

SINAMICS S120 D 21.3
Chassis Format Converter Units
Cabinet Modules
SINAMICS S150
Converter Cabinet Units
E86060-K5521-A131-A6-7600

Motion Control Drives D 31.1
SINAMICS Inverters for Single-Axis Drives
Built-In Units

E86060-K5531-A111-A1-7600

Industrial Controls IC 10
SIRIUS

PDF (E86060-K1010-A101-A8-7600)

Products for Automation and Drives CA 01
Interactive Catalog
Download

www.siemens.com/ca01download

Industry Mall
Information and Ordering Platform
on the Internet:

www.siemens.com/industrymall

All catalogs and other information material, such as brochures, manuals and operating instructions for standard drive systems are available up-to-date on the Internet at the following address:

www.siemens.com/drives/catalogs

The listed documentation can be ordered here or it is available in commonly used file formats (PDF, ZIP) for downloading.

SinaSave energy saving/energy efficiency tool

Further information on the subject of energy saving and the SinaSave energy efficiency tool is available at the following address:

www.automation.siemens.com/sinasave

SIMOTICS EE-COMPARATOR

www.siemens.com/simotics-ee-comparator

Interactive catalog CA 01 - Drive Technology Configurator

The **Drive Technology Configurator** (DT Configurator) is available in conjunction with the electronic catalog CA 01 on DVD.

In addition, the DT Configurator can be used on the Internet without requiring any installation.
The DT Configurator can be found in the Industry Mall at the following address:
www.siemens.com/dt-configurator

The Drive Technology Configurator for gear units, motors, mechanical components, converters, connection systems, control and licenses and system configuration can be found in the CA 01 main menu, under drive systems, selection and engineering tools.

- Data sheets in up to 7 languages in PDF or RTF format
- 2D/3D dimensional drawings in various formats
- Terminal box drawing and terminal connection diagram
- Operating instructions
- Certificates
- Start-up calculation for SIMOTICS motors
- EPLAN macros

System requirements for CA 01 installation with Drive Technology Configurator

- PC with 2 GHz CPU or faster
- 2 GB RAM
- Windows 7 / Windows 8.1 / Windows 10
- Screen resolution 1024 x 768 pixels or higher (1280 x 1024 recommended)
- 8.5 GB of free hard disk space (full installation)
- 2.0 GB of free hard disk space for each additional data package (optional)

Installation

The CA 01 catalog can be directly installed on the hard disk or in the network from the DVD as a partial or full version.

Copper surcharges

The metal factors that are applicable for the copper surcharges are specified in the headers of the current Price List D 81.1 P. Further information about "Metal surcharges" can be found in the appendix to this catalog.

© Siemens AG 2018

SIMOTICS GP, SD, XP, DP Low-Voltage Motors

Type series 1FP1, 1LE1, 1LE5, 1MB1 and 1PC1

Motors

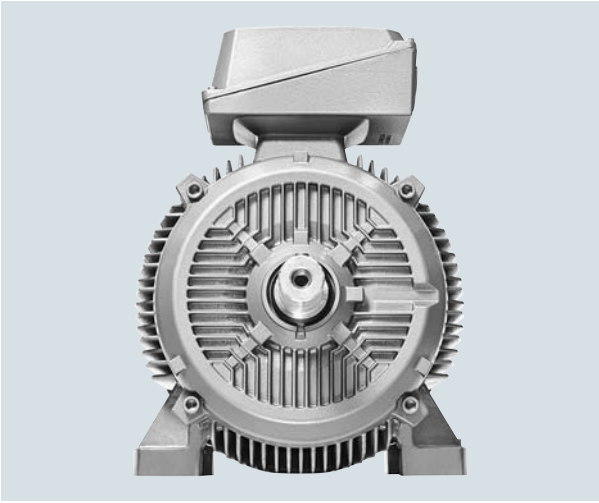

Catalog D 81.1 · 05/2018

Supersedes:
Catalog D 81.1 · 2016

Refer to the Industry Mall for current updates of this catalog:
www.siemens.com/industrymall

The products contained in this catalog can also be found in the Interactive Catalog CA 01.
Article No.: E86060-D4001-A510-D8-7600

Please contact your local Siemens branch.

© Siemens AG 2018

Introduction 1
SIMOTICS motors, Information regarding efficiency in accordance with International Efficiency, Guide to selecting and ordering the motors, General information, Electrical design, Mechanical version, Mounting technology

SIMOTICS GP/SD 1LE1 standard motors 2

SIMOTICS SD standard motors next generation 3

SIMOTICS VSD motors for converter operation 4

SIMOTICS XP 1MB1 explosion-proof motors 5

SIMOTICS DP application-specific motors 6
- Smoke extraction motors
- Marine motors

Appendix 7
NEMA motors, Industry Services, Partner at Siemens · Industry Mall and Interactive Catalog CA 01, Information and Download Center, Tools and engineering, Indexes, Conversion tables, Metal surcharges, Conditions of sale and delivery

NEW

By clicking on an Article No. in Chapters 2, 3, 4 and 6, you can access the Industry Mall with product information and the Configurator.

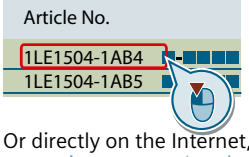

Or directly on the Internet, e.g.
www.siemens.com/product?1LE1504-1AB4

The products and systems described in this catalog are manufactured/distributed under application of a certified quality management system in accordance with EN ISO 9001 (04-31-1267 Certified Registration No. DE-000357 QM). The certificate is recognized by all IQNet countries.

© Siemens AG 2018

Digital Enterprise

The building blocks that ensure everything works together perfectly in the digital enterprise

Digitalization is already changing all areas of life and existing business models. It is placing greater pressure on industry while at the same time creating new business opportunities. Today, thanks to scalable solutions from Siemens, companies can already become a digital enterprise and ensure their competitiveness.

Industry faces tremendous challenges

Reduce time-to-market

Today manufacturers have to bring products to market at an ever-increasing pace despite the growing complexity of these products. In the past, a major manufacturer would push aside a small one, but now it is a fast manufacturer that overtakes a slow one.

Boost flexibility

Consumers want customized products, but at a price they would pay for a mass-produced item. That only works if production is more flexible than ever before.

Improve quality

To ensure a high level of quality while meeting legal requirements, companies have to establish closed quality loops and enable the traceability of products.

Boost efficiency

Today the product itself needs to be sustainable and environmentally friendly, while energy efficiency in production has become a competitive advantage.

Increase security

Increasing networking escalates the threat to production facilities of cyberattacks. Today more than ever, companies need suitable security measures.

© Siemens AG 2018

The digital enterprise has already become a reality

To fully benefit from all the advantages of digitalization, companies first have to achieve complete consistency of their data. Fully digitally integrated business processes, including those of suppliers, can help to create a digital representation of the entire value chain. This requires

- the integration of industrial software and automation,
- expansion of the communication networks,
- security in automation,
- and the use of business-specific industrial services.

MindSphere

The cloud-based open IoT operating system from Siemens

With MindSphere, Siemens offers a cost-effective and scalable cloud platform as a service (PaaS) for the development of applications. The platform, designed as an open operating system for the Internet of Things, makes it possible to improve the efficiency of plants by collecting and analyzing large volumes of production data.

Totally Integrated Automation (TIA)

Where digitalization becomes reality

Totally Integrated Automation (TIA) ensures the seamless transition from the virtual to the real world. It already encompasses all the necessary conditions for transforming the benefits of digitalization into true added value. The data that will form the digital twin for actual production is generated from a common base.

Digital Plant
Learn more about the digital enterprise for the process industry
www.siemens.com/digitalplant

Digital Enterprise Suite
Learn more about the digital enterprise for the discrete industry
www.siemens.com/digital-enterprise-suite

© Siemens AG 2018

Integrated Drive Systems

Faster on the market and in the black with Integrated Drive Systems

Integrated Drive Systems are Siemens' trendsetting answer to the high degree of complexity that characterizes drive and automation technology today. The world's only true one-stop solution for entire drive systems is characterized in particular by its threefold integration: Horizontal, vertical, and lifecycle integration ensure that every drive system component fits seamlessly into the whole system, into any automation environment, and even into the entire lifecycle of a plant.

The outcome is an optimal workflow – from engineering all the way to service that entails more productivity, increased efficiency, and better availability. That's how Integrated Drive Systems reduce time to market and time to profit.

Horizontal integration

Integrated drive portfolio: The core elements of a fully integrated drive portfolio are frequency converters, motors, couplings, and gear units. At Siemens, they're all available from a single source. Perfectly integrated, perfectly interacting. For all power and performance classes. As standard solutions or fully customized. No other player in the market can offer a comparable portfolio. Moreover, all Siemens drive components are perfectly matched, so they are optimally interacting.

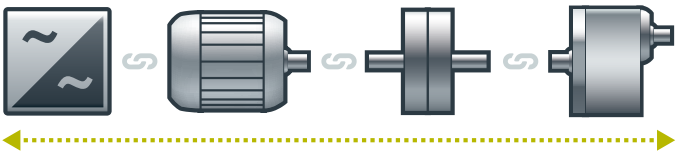

You can boost the availability of your application or plant to up to

99 %*

*e.g., conveyor application

Vertical integration

Thanks to **vertical integration**, the complete drive train is seamlessly integrated in the entire automation environment – an important prerequisite for production with maximum value added. Integrated Drive Systems are part of Totally Integrated Automation (TIA), which means that they are perfectly embedded into the system architecture of the entire industrial production process. This enables optimal processes through maximum communication and control.

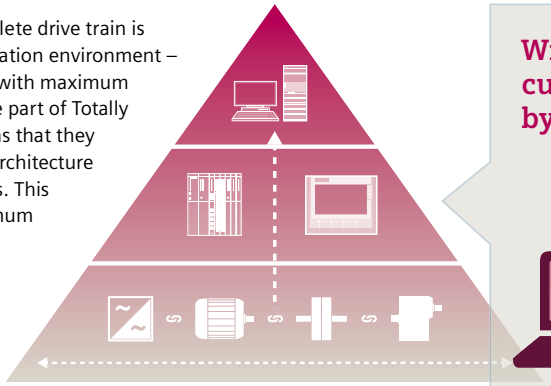

With TIA Portal you can cut your engineering time by up to

30 %

Lifecycle integration

Lifecycle integration adds the factor of time: Software and service are available for the entire lifecycle of an Integrated Drive System. That way, important optimization potential for maximum productivity, increased efficiency, and highest availability can be leveraged throughout the system's lifecycle – from planning, design, and engineering to operation, maintenance, and all the way even to modernization.

With Integrated Drive Systems, assets become important success factors. They ensure shorter time to market, maximum productivity and efficiency in operation, and shorter time to profit.

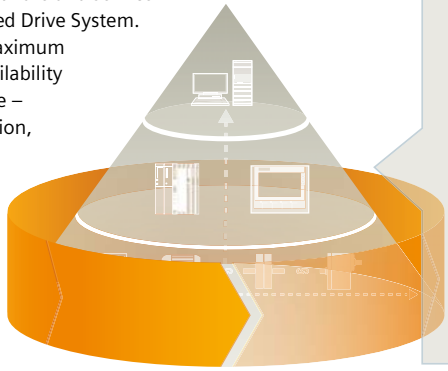

With Integrated Drive Systems you can reduce your maintenance costs by up to

15 %

www.siemens.com/ids

© Siemens AG 2018

Introduction

1/2 SIMOTICS motors
1/2 Innovative drive technology for all industries, applications and power classes
1/4 SIMOTICS Digital Data App

1/5 Information regarding efficiency in accordance with International Efficiency
1/5 Efficiency classes and efficiencies according to IEC 60034-30-1

1/7 Guide to selecting and ordering the motors
1/7 Catalog orientation and drive selection
1/12 Special versions

1/20 General information
1/20 Cut-away diagram of a low-voltage motor
1/21 Colors and paint finish
1/24 Packaging and dispatch
1/24 Safety notes and documentation
1/24 Test certificates
1/24 Extension of the liability for defects
1/25 Versions in accordance with standards and specifications

1/29 Electrical design
1/29 Voltages, currents and frequencies
1/29 Powers
1/30 Rating plate and additional rating plates
1/31 Efficiency and power factor
1/31 Rated speed and direction of rotation, rated torque
1/32 Converter operation
1/33 Windings and insulation
1/35 Coolant temperature and installation altitude
1/36 Heating and ventilation
1/38 Motor protection
1/41 Connection, circuit and terminal boxes
1/50 Degrees of protection

1/51 Mechanical version
1/51 Types of construction
1/53 Flange dimensions
1/54 Shaft and rotor
1/55 Measures for gear mounting
1/56 Balance and vibration severity
1/57 Noise levels for line operation
1/58 Bearings and lubrication
1/77 T-drain – adjustable drainage of condensed water
1/78 Lifting eyes and transport

1/79 Mounting technology
1/79 Preparation for mountings
1/80 Modular technology
1/80 • Separately driven fan
1/81 • Brakes
1/82 • 2LM8 spring-operated disk brake
1/86 • KFB spring-operated brake
1/89 • SFB-SH solenoid double-disk spring-operated brake
1/92 • Configuration of motors with brakes
1/93 • FDX spring-operated brake
1/98 • 1XP8 012 rotary pulse encoder
1/99 Special technology
1/99 • LL 861 900 220 rotary pulse encoder
1/100 • HOG 9 DN 1024 I rotary pulse encoder
1/101 • POG 9 rotary pulse encoder
1/102 • POG 10 rotary pulse encoder
1/103 • HOG 10 D 1024 I rotary pulse encoder
1/104 • Sendix 5020 rotary pulse encoder
1/105 • Backstop, protective cover
1/106 Dimensions and weights of the mountings

© Siemens AG 2018

1

Innovative drive technology for all industries, applications and power classes

Overview

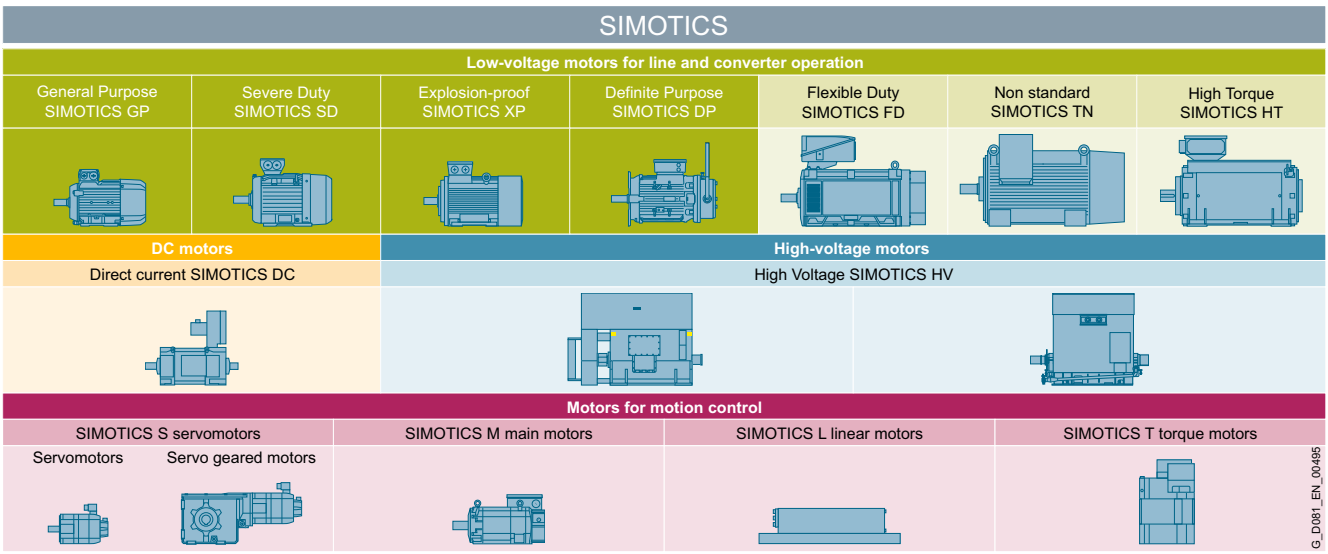

SIMOTICS motors

With SIMOTICS, Siemens has the most comprehensive portfolio of electric motors worldwide. From energy-efficient, low-voltage motors through servomotors with high dynamic performance up to well-proven DC motors and powerful high-voltage motors. Innovative drive technology for all industries, applications and power classes.

Outstanding performance, quality, efficiency, and compactness.

The SIMOTICS motor portfolio:

- SIMOTICS low-voltage motors for line and converter operation:
  For standard applications with low to high motor power ratings
- SIMOTICS Motion Control motors:
  For highly dynamic and extremely precise applications in mechanical engineering
- SIMOTICS DC motors:
  For DC applications
- SIMOTICS high-voltage motors:
  For line and converter operation in standard applications with high to very high motor power ratings

SIMOTICS low-voltage motors for line and converter operation

SIMOTICS low-voltage motors are the right choice for solving drive tasks efficiently and reliably. In contrast to Motion Control motors, which are additionally characterized by very high dynamic response and precision, the more favorably priced low-voltage motors are predestined for continuous or periodic, as well as powerful motions with fixed or variable speed, such as in pumps, fans, compressors, conveyor belts, lifts, hoisting and traversing gear, winders, mixers, kneaders and centrifuges.

SIMOTICS low-voltage motors are characterized by very high reliability, ruggedness, and efficiency in operation.

They are available in diverse series and versions, which means that the appropriate motor can always be found for any application in an industrial or commercial environment, as well as in building management systems, shipbuilding and infrastructure.

SIMOTICS low-voltage motors comply with the most important relevant standards and guidelines and are available in IEC, NEMA, and APAC versions. They can be used all over the world, and have a global long-term spare parts service. For these reasons, they provide a sustainable basis for export-oriented, globally operating companies to enable them to conduct their international business efficiently.

© Siemens AG 2018

Overview (continued)

SIMOTICS GP – General Purpose motors are the most economical solution for use under standard environmental conditions. Typically, these motors have an aluminum housing and are characterized by their low weight. SIMOTICS GP motors are available in the power range from 0.09 to 45 kW.

Available motor variants:

- Induction motors, optimized for line operation
  - in efficiency classes IE4, IE3, IE2, IE1
  - as a standards-compliant version or compact version with increased power (IE3, IE2, IE1)
  - as a 2, 4, 6, 8-pole version
  - as pole-changing motors
  - as an APAC version for use in the ASEAN Pacific region (IE3, IE2)
  - as a NEMA version for use in the NAFTA area
    - electrically (mechanically acc. to IEC): Eagle Line
    - electrically and mechanically
  - can optionally be run on a converter
- Motors optimized for operation on frequency converters
  - as a SIMOTICS GP – VSD10 line induction motor
  - as a SIMOTICS GP – VSD4000 line synchronous reluctance motor for particularly efficient operation in conjunction with SINAMICS converters.
- Different types of construction, voltage versions, and a wide variety of options/add-ons for precise adaptation of the motors to application and customer-specific requirements.

SIMOTICS SD – Severe Duty motors have a rugged cast-iron housing, which means they are also suitable for use in harsh to very harsh environments. With a wide power range from 0.09 to 500 kW, SIMOTICS SD motors are the basis for machine and plant builders and owners who require a universal motor for flexible requirements and conditions of use.

Available motor variants:

- Induction motors, optimized for line operation
  - in efficiency classes IE4, IE3, IE2, IE1
  - standards-compliant version or compact version with increased power (IE3, IE2, IE1)
  - as a 2, 4, 6, 8-pole version
  - as an APAC version for use in the ASEAN Pacific region (IE3, IE2)
  - as a NEMA version for use in the NAFTA area
    - electrically (mechanically acc. to IEC): Eagle Line
    - electrically and mechanically
  - can optionally be run on a converter
- Motors optimized for operation on frequency converters
  - as a SIMOTICS SD – VSD10 line induction motor
  - as a SIMOTICS SD – VSD4000 line synchronous reluctance motor for particularly efficient operation in conjunction with SINAMICS converters.
- Basic Line and particularly rugged Performance Line
- Different types of construction, voltage versions, and a very wide variety of options/add-ons for precise adaptation of the motors to application and customer-specific requirements.

SIMOTICS – next generation is the next innovation step in low-voltage motors.
In particular, these motors offer the following advantages for customers:

- More efficiency in the engineering process due to the Digital Twin Concept.
- Further increase in availability due to the Smart Motor Concept.

SIMOTICS XP – Explosion Proof motors are designed for use in hazardous environments. For all conditions of use and hazard zones, e.g. in explosive gas atmospheres of the chemical/petrochemical sector or in explosive dust atmospheres in the mining or food and beverage sectors, there are suitable motor versions in aluminum and cast iron that ensure maximum safety and satisfy the relevant standards and regulations.

SIMOTICS XP motors are available in the power range from 0.09 to 200 kW.

Available motor variants:

- Motors for use in Zones 2, 21, and 22.
- Induction motors optimized for line operation
  - in efficiency classes IE3, IE2, IE1
  - as a 2, 4, 6, 8-pole version
  - as a NEMA version for use in the NAFTA area
- Motors suitable for line and converter operation
- Basic Line and particularly rugged Performance Line in a cast-iron housing
- Different types of construction, voltage versions, and a wide variety of options/add-ons for precise adaptation of the motors to application and customer-specific requirements.

SIMOTICS DP – Definite Purpose motors are low-voltage motors for application-specific, customized and industry-specific use.

They have the required respective industry-specific properties and certificates.

SIMOTICS DP motors:

- Crane motors for use in cranes (primarily for hoisting gear)
- Marine motors for use on ships
- Steel plant motors for use in the steel industry
- Roller table motors for roller table applications in the steel industry
- Smoke extraction motors for use in smoke extraction applications

SIMOTICS FD – Flexible Duty motors have been optimized for converter operation to flexibly address applications in power ranges extending from 200 to over 1600 kW. These are available with various cooling methods (air cooling, water cooling).

SIMOTICS TN – Transnorm motors are low-voltage motors for line and converter operation in a cast-iron housing with higher power ratings up to 5000 kW from shaft height 315. In non-standard (Transnorm) motors, the assignment of the power rating and shaft extensions to frame size is not standardized.

SIMOTICS HT – High Torque motors are permanent magnet synchronous motors and are used in applications that require extremely powerful drives without gear units, even at low speeds.

© Siemens AG 2018

SIMOTICS Digital Data App

Overview

The SIMOTICS Digital Data App provides access to technical data, spare part information, and operating instructions for SIMOTICS GP/SD motors any time any place. This gives our customers quick access to important contents of the digital twin, which simplifies and optimizes the customer's processes.
By scanning the data matrix code on the additional rating plate of the motor, the relevant electrical and mechanical data can be displayed for this motor.

- Electronic and mechanical rating plate data
- Additional motor data
- Service information, e.g. display of the spare part list
- Display of the ordering options installed
- Documentation and manuals

The SIMOTICS Digital Data App is available for Apple and Android devices and can be installed from the respective stores. To do this, please scan the appropriate QR code.

Download on the App Store

Scan the QR code for the SIMOTICS Digital Data App.

GET IT ON Google Play

Scan the QR code for the SIMOTICS Digital Data App.

Benefits

- Shorter commissioning and service times
- Fast access to relevant service information
- Online availability of the motor data for integration into ERP systems

© Siemens AG 2018

Overview

Harmonization of the efficiency classes

Various energy efficiency standards exist worldwide for induction motors. To promote global standardization, the international standard IEC 60034-30-1:2014 (Rotating electrical machines – Part 30-1: Efficiency classes of single-speed, three-phase, cage-induction motors (IE code) were defined and are used as the basis for local standards in most countries. Only the NAFTA countries USA, Canada, and Mexico use the differing standards of NEMA MG1. Standard IEC 60034-30-1:2014 divides low-voltage induction motors into new efficiency classes IE1 to IE4, which supersede the efficiency classes EFF2 and EFF1 previously valid in the EU.

Applicability (excerpt)
- Low-voltage motors up to 1000 V (50/60 Hz in line operation)
- Power rating: 0.12 to 1000 kW; with 2, 4, 6, or 8-poles
- Operating mode: S1

The efficiencies in IEC 60034-30-1 are based on the method for determining losses according to IEC 60034-2-1:2014.

IE efficiency classes

The efficiency classes are grouped according to the following nomenclature (IE = International Efficiency):
- IE1 (Standard Efficiency)
- IE2 (High Efficiency)
- IE3 (Premium Efficiency)
- IE4 (Super Premium Efficiency)

IEC 60034-30-1 EU and other countries	NEMA MG1 NAFTA (USA, Canada, Mexico)	GB 18613-2012 China
IE4 [1]		**Grade 1 (IE4)**
IE3	**Premium Efficient (60 Hz)**	**Grade 2 (IE3)**
IE2	**Energy Efficient (60 Hz)**	**Grade 3 (IE2)**

Comparison of IE efficiency classes

Note:
All efficiency classes are stated with reference to 50 Hz data (unless specified otherwise).

Measuring method according to IEC 60034-2-1:2014 for determining the efficiency

With this measuring method, motor losses are no longer applied as a percentage, but are determined by standard methods. The nominal efficiencies are therefore reduced from EFF1 to IE2 and from EFF2 to IE1, even though there have been no technical or physical changes to the motors.

Previously: P_{LL} = 0.5 % of P_1 (power drawn; IEC 60034-2)
Now: P_{LL} = individual measurement (IEC 60034-1)

P_{LL} = additional load losses

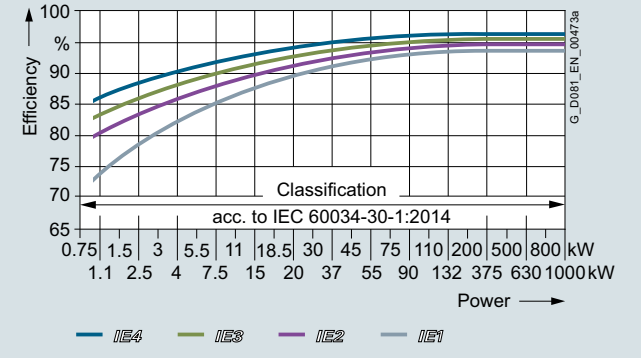

IE1-IE4 efficiencies, 4-pole 50 Hz, depending on the power

Minimum efficiencies according to IEC 60034-30-1:2014

Rated power	Efficiency η in % IEC IE class							
$P_{rated, 50\ Hz}$	**IE1** – Standard Efficiency				**IE2** – High Efficiency			
	2-pole	4-pole	6-pole	8-pole	2-pole	4-pole	6-pole	8-pole
kW								
0.18	52.8	57.0	45.5	38.0	60.4	64.7	56.6	45.9
0.20	54.6	58.5	47.6	39.7	61.9	65.9	58.2	47.4
0.25	58.2	61.5	52.1	43.4	64.8	68.5	61.6	50.6
0.37	63.9	66.0	59.7	49.7	69.5	72.7	67.6	56.1
0.40	64.9	66.8	61.1	50.9	70.4	73.5	68.8	57.2
0.55	69.0	70.0	65.8	56.1	74.1	77.1	73.1	61.7
0.75	72.1	72.1	70.0	61.2	77.4	79.6	75.9	66.2
1.1	75.0	75.0	72.9	66.5	79.6	81.4	78.1	70.8
1.5	77.2	77.2	75.2	70.2	81.3	82.8	79.8	74.1
2.2	79.7	79.7	77.7	74.2	83.2	84.3	81.8	77.6
3	81.5	81.5	79.7	77.0	84.6	85.5	83.3	80.0
4	83.1	83.1	81.4	79.2	85.8	86.6	84.6	81.9
5.5	84.7	84.7	83.1	81.4	87.0	87.7	86.0	83.8
7.5	86.0	86.0	84.7	83.1	88.1	88.7	87.2	85.3
11	87.6	87.6	86.4	85.0	89.4	89.8	88.7	86.9
15	88.7	88.7	87.7	86.2	90.3	90.6	89.7	88.0
18.5	89.3	89.3	88.6	86.9	90.9	91.2	90.4	88.6
22	89.9	89.9	89.2	87.4	91.3	91.6	90.9	89.1
30	90.7	90.7	90.2	88.3	92.0	92.3	91.7	89.8
37	91.2	91.2	90.8	88.8	92.5	92.7	92.2	90.3
45	91.7	91.7	91.4	89.2	92.9	93.1	92.7	90.7
55	92.1	92.1	91.9	89.7	93.2	93.5	93.1	91.0
75	92.7	92.7	92.6	90.3	93.8	94.0	93.7	91.6
90	93.0	93.0	92.9	90.7	94.1	94.2	94.0	91.9
110	93.3	93.3	93.3	91.1	94.3	94.5	94.3	92.3
132	93.5	93.5	93.5	91.5	94.6	94.7	94.6	92.6
160	93.8	93.8	93.8	91.9	94.8	94.9	94.8	93.0
200 … 1000	94.0	94.0	94.0	92.5	95.0	95.1	95.0	93.5

Rated power	Efficiency η in % IEC IE class							
$P_{rated, 50\ Hz}$	**IE3** – Premium Efficiency				**IE4** – Super Premium Efficiency			
	2-pole	4-pole	6-pole	8-pole	2-pole	4-pole	6-pole	8-pole
kW								
0.18	65.9	69.9	63.9	58.7	70.8	74.7	70.1	67.2
0.20	67.2	71.1	65.4	60.6	71.9	75.8	71.4	68.4
0.25	69.7	73.5	68.6	64.1	74.3	77.9	74.1	70.8
0.37	73.8	77.3	73.5	69.3	78.1	81.1	78.0	74.3
0.40	74.6	78.0	74.4	70.1	78.9	81.7	78.7	74.9
0.55	77.8	80.8	77.2	73.0	81.5	83.9	80.9	77.0
0.75	80.7	82.5	78.9	75.0	83.5	85.7	82.7	78.4
1.1	82.7	84.1	81.0	77.7	85.2	87.2	84.5	80.8
1.5	84.2	85.3	82.5	79.7	86.5	88.2	85.9	82.6
2.2	85.9	86.7	84.3	81.9	88.0	89.5	87.4	84.5
3	87.1	87.7	85.6	83.5	89.1	90.4	88.6	85.9
4	88.1	88.6	86.8	84.8	90.0	91.1	89.5	87.1
5.5	89.2	89.6	88.0	86.2	90.9	91.9	90.5	88.3
7.5	90.1	90.4	89.1	87.3	91.7	92.6	91.3	89.3
11	91.2	91.4	90.3	88.6	92.6	93.3	92.3	90.4
15	91.9	92.1	91.2	89.6	93.3	93.9	92.9	91.2
18.5	92.4	92.6	91.7	90.1	93.7	94.2	93.4	91.7
22	92.7	93.0	92.2	90.6	94.0	94.5	93.7	92.1
30	93.3	93.6	92.9	91.3	94.5	94.9	94.2	92.7
37	93.7	93.9	93.3	91.8	94.8	95.2	94.5	93.1
45	94.0	94.2	93.7	92.2	95.0	95.4	94.8	93.4
55	94.3	94.6	94.1	92.5	95.3	95.7	95.1	93.7
75	94.7	95.0	94.6	93.1	95.6	96.0	95.4	94.2
90	95.0	95.2	94.9	93.4	95.8	96.1	95.6	94.4
110	95.2	95.4	95.1	93.7	96.0	96.3	95.8	94.7
132	95.4	95.6	95.4	94.0	96.2	96.4	96.0	94.9
160	95.6	95.8	95.6	94.3	96.3	96.6	96.2	95.1
200	95.8	96.0	95.8	94.6	96.5	96.7	96.3	95.4
250	95.8	96.0	95.8	94.6	96.5	96.7	96.5	95.4
315 … 1000	95.8	96.0	95.8	94.6	96.5	96.7	96.6	95.4

[1] Defined in IEC/TS 60034-31.

© Siemens AG 2018

Overview (continued)

Background information

Comprehensive laws have been introduced in the European Union with the objective of reducing energy consumption and therefore CO_2 emissions. EU Directive 640/2009 concerns the energy consumption or efficiency of induction motors in the industrial environment. This Directive is now in force in every country of the European Economic Area.

For further details on internationally applicable standards and legal requirements, visit:
www.siemens.com/international-efficiency

Exceptions to the EU Directive

- Motors that are designed to be operated totally submerged in a liquid;
- Motors fully integrated into a product (e.g. a gear unit, pump, fan or compressor) whose energy efficiency cannot be measured independently of the product;
- Motors that are specially designed for operation under the following conditions:
  - At altitudes greater than 4000 meters above sea level;
  - At ambient temperatures above 60 °C;
  - At maximum operating temperatures above 400 °C;
  - At ambient temperatures below –30 °C
  - With cooling liquid temperatures at the product intake of below 0 °C or above 32 °C;
  - In hazardous areas in the context of Directive 94/9/EU of the European Parliament and Council;
- Brake motors

The following motors are not involved:

- Pole-changing motors
- Synchronous motors
- Motors for intermittent duty S2 to S9
- Single-phase motors
- Motors specially developed for converter operation in accordance with IEC 60034-25

The following changes came into effect on the dates below:

From January 1, 2015:
Compliance with the legally required minimum efficiency class IE3 for power ratings from 7.5 to 375 kW or, as an alternative, IE2 motor plus frequency converter.

From January 1, 2017:
Compliance with the legally required minimum efficiency class IE3 for power ratings from 0.75 to 375 kW or, as an alternative, IE2 motor plus frequency converter.

Changes according to EU motor regulation 640/2009
Low-voltage motors with a power rating of 0.75 kW to < 7.5 kW, from January 1, 2017, and low-voltage motors with a power ranging from 7.5 kW to 375 kW with efficiency class IE2, have been labeled as follows since January 1, 2015:

This obligation applies only within the European Economic Area. Correct application is the sole responsibility of the customer.

Other potential restrictions as described in the technical documentation may apply to converter operation and must be taken into account!

The following are generally recommended for converter operation:

- Motor temperature detection by embedded temperature sensor
- Bearing insulation with frame size 225 and larger

Motor series SIMOTICS VSD10 (1LE1092/1LE1592), VSD4000 (1FP10/1FP15) and SIMOTICS FD (1LH1) are the preferred motor types for converter operation.

Note:
Different minimum efficiency class requirements apply in China, Korea, and Australia. Other countries will be available soon.

Motors for the North American market

The Energy Policy Act (EPAct) was superseded in December 2010 by the Energy Independence Security Act (EISA).

The following motors must fulfill the NEMA Premium Efficient Level:

- 1 hp (0.75 kW) … 500 hp (373 kW): 2, 4-pole
  1 hp (0.75 kW) … 350 hp (261 kW): 6-pole
  1 hp (0.75 kW) … 250 hp (186 kW): 8-pole
- 2, 4, 6 and 8-pole
- ≤ 600 V
- NEMA Design A, B, or C. IEC Design N or H

For details, see NEMA MG1, Table 12-11 and Table 12-12.

Abbreviations

NEMA: National Electrical Manufacturers Association
IEC: International Electrotechnical Commission
EEA: European Economic Area

© Siemens AG 2018

Overview

Steps for drive selection

Step 1	**Orientation and general technical information**		
Technical requirements for the motor	Rated frequency and rated voltage	3 AC 50/60 Hz, 400, 500 or 690 V	
	Operating mode	Standard duty (continuous duty S1 according to EN 60034-1)	
	Degree of protection or type of explosion protection required	IP..	
	Rated speed (No. of poles)	n = ... rpm	
	Rated power	P = ... kW	
	Rated torque	$T = P \cdot 9550/n$ = ... Nm	
	Type of construction	IM..	
Step 2	**Preselection in accordance with the application**		
Determination of the installation conditions and definition of the application, if necessary	Ambient temperature	≤ 40 °C	> 40 °C
	Installation altitude	≤ 1000 m	> 1000 m
	Factors for derating	None	Determine the factor for derating (for reduction factor, see "Coolant temperature and installation altitude" on Page 1/35)
Cross-reference to other motors	These can be LOHER motors for special requirements in the area of explosion protection and applications or motors to the NEMA standard		
Step 3	**Preliminary selection of the motor**		
Determination of the range of possible motors	Select the frame size and therefore the possible motors on the basis of the following parameters: cooling method, degree of protection, rated power, rated speed and rated torque range. Note: The standard temperature range of the motors is from -20 to +40 °C.		

Layout of the selection and ordering tables and description of the columns of the table headers

Power, frame size, temperature class				Operating values at rated power															Article No., add. data		
Table header – Meaning																					
P_{rated}, 50 Hz	P_{rated}, 60 Hz	P_{rated}, 60 Hz	Frame size	n_{rated}, 50 Hz	T_{rated}, 50 Hz	Different IE class	CC No. CC032A	η_{rated}, 50 Hz, 4/4	η_{rated}, 50 Hz, 3/4	η_{rated}, 50 Hz, 2/4	cos-φ_{rated}, 50 Hz, 4/4	I_{rated}, 50 Hz, 400 V	T_{LR}/T_{rated}	I_{LR}/I_{rated}	T_B/T_{rated}	L_{pfA}, 50 Hz	L_{WA}, 50 Hz	Article No.	m IM B3	J
kW	**kW**	**hp**	FS	rpm	Nm			%	%	%		A				dB (A)	dB (A)		kg	kgm^2

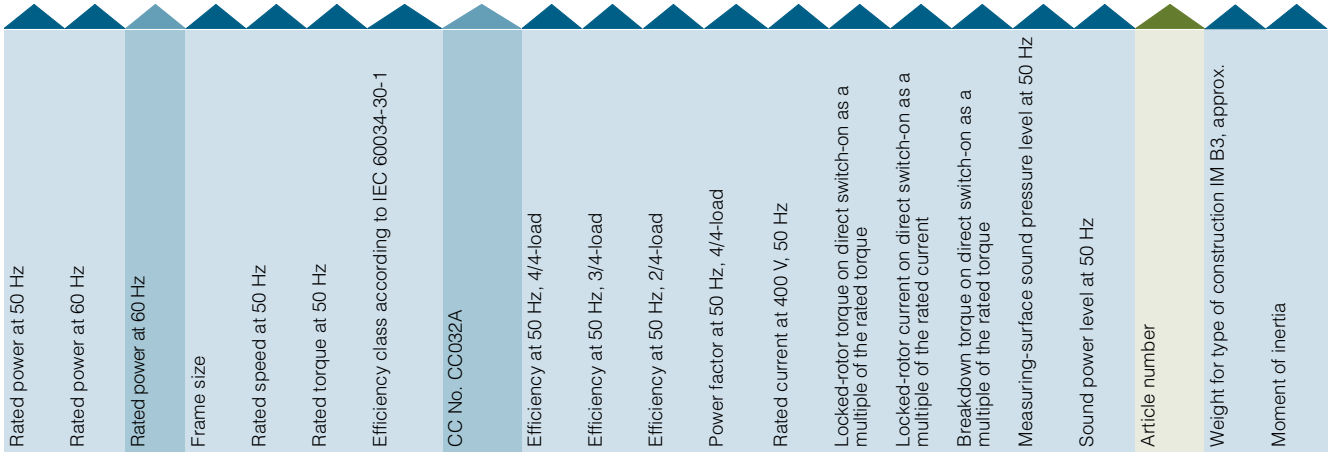

Legend:

Primary key
Standard values for all motors
Specially for NEMA Energy Efficient MG1 motors, Table 12-11 or NEMA Premium Efficient MG1 motors, Table 12-12

Note on pole-changing motors:
The operating values are specified here for the rated power for the two different pole numbers.

Step 4	**Detailed selection of the motor in the selection and ordering data tables**
Determination of the basic Article No. of the motor	Determine the motor Article No. according to the following parameters: rated power, rated speed, rated torque and rated current from the "Selection and ordering data" for the motors that have already been identified as possibilities.
Step 5	**Selection of the special versions or options**
Completing the motor Article No.	Determine special versions and the associated order codes (e.g. special voltages and types of construction, motor protection and degrees of protection, windings and insulation, colors and paint finish, mountings and mounting technology, etc.).
Step 6	**Additional information for motor selection**
Checking the required dimensions	The dimensions are specified in each catalog section under the heading of "Dimensions".
Selection of the frequency converter, if required	Article No. of the converter as well as its selection, see Catalogs D 11, D 18.1, D 21.3, D 31, and DA 51.2.

© Siemens AG 2018

Overview (continued)

Steps for drive selection in the catalog

		Catalog section
Step 1	Introduction	1
Step 2	SIMOTICS GP/SD 1LE1 standard motors	2
Step 3	Orientation	
Step 4	**SIMOTICS GP/SD 1LE1** • Motors with IE4 Super Premium Efficiency • Motors with IE3 Premium Efficiency • Motors with IE2 High Efficiency • Motors with IE1 Standard Efficiency	
Step 5	Article No. supplements and special versions	
Step 6	Dimensions	
Step 3	Orientation	
Step 4	**SIMOTICS GP/SD 1LE1 – APAC Line** • Motors with IE3 Premium Efficiency • Motors with IE2 High Efficiency	
Step 5	Article No. supplements and special versions	
Step 6	Dimensions	
Step 3	Orientation	
Step 4	**SIMOTICS GP/SD 1LE1 – Eagle Line** • NEMA Premium Efficient motors • NEMA Energy Efficient motors	
Step 5	Article No. supplements and special versions	
Step 6	Dimensions	
Step 3	Orientation	
Step 4	**SIMOTICS GP 1LE1 – pole-changing** • Aluminum series 1LE1011, self-ventilated, const. load torque • Aluminum series 1LE1011/1LE1012 self-ventilated, quadrat. load torque	
Step 5	Article No. supplements and special versions	
Step 6	Dimensions	
Step 2	SIMOTICS SD 1LE5 standard motors	3
Step 3	Orientation	
Step 4	**SIMOTICS SD 1LE5** • Motors with IE4 Super Premium Efficiency • Motors with IE3 Premium Efficiency	
Step 5	Article No. supplements and special versions	
Step 6	Dimensions	
Step 2	SIMOTICS VSD motors for converter operation	4
	Introduction	
Step 3	Orientation	
Step 4	**SIMOTICS GP/SD VSD4000 line reluctance motors with SINAMICS converters** • IE4 Super Premium Efficiency	
Step 5	Article No. supplements and special versions	
Step 6	Dimensions	
Step 3	Orientation	
Step 4	**SIMOTICS GP/SD VSD10 line standard motors for converter operation** • Standard Efficiency	
Step 5	Article No. supplements and special versions	
Step 6	Dimensions	

© Siemens AG 2018

Overview (continued)

Catalog section

Step 2 **SIMOTICS XP 1MB1 explosion-proof motors** — 5

Step 3 **Orientation**

Step 4 **Motors for Zone 21/22 or 2 in type of protection Ex t or Ex ec**

- Motors with IE3 Premium Efficiency
  - Aluminum series 1MB10
  - Cast-iron series 1MB15/6
- Motors with IE2 High Efficiency
  - Aluminum series 1MB10
  - Cast-iron series 1MB15/6
- Motors with IE1 Standard Efficiency
- Aluminum series 1MB10

Step 5 **Article No. supplements and special versions**

Step 6 **Dimensions**

Step 2 **SIMOTICS DP application-specific motors** — 6

Introduction

Step 3 **Smoke extraction motors**

Orientation

Step 4 **Motors with IE3 Premium Efficiency**

- Aluminum series 1PC1303
- Cast-iron series 1PC1304

Motors with IE2 High Efficiency

- Aluminum series 1PC1300
- Cast-iron series 1PC1301

Step 5 **Article No. supplements and special versions**

Step 6 **Dimensions**

Step 3 **Marine motors**

Orientation

Step 4 **Special versions**

- **Motors with IE4 Super Premium Efficiency**
  - Aluminum series 1LE1004
  - Cast-iron series 1LE1..4, 1LE5..4
- **Motors with IE3 Premium Efficiency**
  - Aluminum series 1LE10.3, 1MB10.3
  - Cast-iron series 1LE1..3, 1LE5..3, 1MB1..3
- **Motors with IE2 High Efficiency**
  - Aluminum series 1LE10.1, 1MB10.1
  - Cast-iron series 1LE1..1, 1MB1..1
- **Motors with IE1 Standard Efficiency**
  - Aluminum series 1LE10.2, 1MB10.2
  - Cast-iron series 1LE1..2
- **Pole-changing motors**
  - Aluminum series 1LE1011, 1LE1012

© Siemens AG 2018

Overview (continued)

1LE1 standard motors

Motor version	Efficiency class		Rated power at 50 Hz (values in kW) or 60 Hz (values in hp)	Frame size – motor type 63 71 80 90 100 112 132 160 180 200 225 250 280 315	Page
SIMOTICS GP aluminum housing					
IEC	IE4 Super Premium Efficiency		2.2 … 37 kW	1LE1004	2/8
	IE3 Premium Efficiency		0.37 … 45 kW	1LE1003	2/13
	IE2 High Efficiency		0.12 … 45 kW	1LE1001	2/26
	IE1 Standard Efficiency		0.09 … 37 kW	1LE1002	2/44
APAC Line	IE3 Premium Efficiency		0.75 … 45 kW	1LE1043	2/54
	IE2 High Efficiency		0.75 … 22 kW	1LE1041	2/65
Eagle Line	NEMA Premium Efficient		0.37 … 37 kW 0.5 ... 50 hp	1LE1023	2/71
	NEMA Energy Efficient		0.37 … 0.55 kW 0.5 ... 0.75 hp	1LE1021	2/80
Pole-changing	–	– For a constant load torque	0.55 … 16 kW	1LE1011 4/2-pole, 8/4-pole	2/82
	–	– For square-law load torque	0.5 … 28 kW	1LE1011 4/2-pole, 8/4-pole	2/83
			0.6 … 26 kW	1LE1012 6/4-pole	2/83
SIMOTICS SD cast-iron housing					
IEC	IE4 Super Premium Efficiency	– Basic Line	2.2 … 200 kW	1LE1504	2/9
		– Performance Line	2.2 … 200 kW	1LE1604	2/9
	IE3 Premium Efficiency	– Basic Line	0.18 … 200 kW	1LE1503	2/17
		– Performance Line	1.5 … 200 kW	1LE1603	2/17
	IE2 High Efficiency	– Basic Line	0.09 … 200 kW	1LE1501	2/32
		– Performance Line	0.75 … 200 kW	1LE1601	2/32
	IE1 Standard Efficiency	– Basic Line	0.75 … 200 kW	1LE1502	2/48
APAC Line	IE3 Premium Efficiency	– Basic Line	0.75 … 200 kW	1LE1543	2/57
		– Performance Line	0.75 … 200 kW	1LE1643	2/57
	IE2 High Efficiency	– Basic Line	15 … 200 kW	1LE1541	2/68
Eagle Line	NEMA Premium Efficient	– Basic Line	0.18 … 185 kW 0.25 ... 250 hp	1LE1523	2/73
		– Performance Line	2.2 … 185 kW 3 … 250 hp	1LE1623	2/73
	NEMA Energy Efficient	– Basic Line	0.09 … 0.55 kW 0.12 ... 0.75 hp	1LE1521	2/81

1LE5 standard motors – next generation

Motor version	Efficiency class		Rated power at	Frame size – motor type 63 71 80 90 100 112 132 160 180 200 225 250 280 315 355	Page
SIMOTICS SD cast-iron housing					
IEC	IE4 Super Premium Efficiency	– Basic Line	250 … 315 kW	1LE5504	3/8
		– Performance Line	250 … 500 kW	1LE5604	3/9
	IE3 Premium Efficiency	– Basic Line	250 … 315 kW	1LE5503	3/12
		– Performance Line	250 … 500 kW	1LE5603	3/13
SIMOTICS SD Add cast-iron housing					
IEC	IE4 Super Premium Efficiency	– Basic Line	250 … 315 kW	1LE5534	3/10
		– Performance Line	250 … 500 kW	1LE5634	3/11
	IE3 Premium Efficiency	– Basic Line	250 … 315 kW	1LE5533	3/14
		– Performance Line	250 … 500 kW	1LE5633	3/15

SIMOTICS VSD motors for converter operation

SIMOTICS GP/SD VSD4000 line reluctance motors for SINAMICS converters,
SIMOTICS GP/SD VSD10 line standard motors for converter operation

Motor version	Efficiency class	Rated power	Frame size – motor type 63 71 80 90 100 112 132 160 180 200 225 250 280 315	Page
SIMOTICS GP aluminum housing				
VSD4000 line	Super Premium Efficiency	0.55 … 30 kW	1FP10.4	4/26
VSD10 line	Standard Efficiency	2.2 … 18.5 kW	1LE1092	4/70
SIMOTICS SD cast-iron housing				
VSD4000 line	Super Premium Efficiency	0.55 … 30 kW	1FP15.4	4/28
VSD10 line	Standard Efficiency	2.2 … 200 kW	1LE1592	4/76

© Siemens AG 2018

Overview (continued)

Explosion-proof motors with type of protection Ex tb (Zone 21), Ex tc (Zone 22), Ex ec (Zone 2)

Motor version	Efficiency class		Rated power	Frame size – motor type	Page
				63 71 80 90 100 112 132 160 180 200 225 250 280 315	
SIMOTICS XP aluminum housing					
IEC	IE3 Premium Efficiency		0.37 … 18.5 kW	1MB10.3	5/16
	IE2 High Efficiency		0.37 … 18.5 kW	1MB10.1	5/20
	IE1 Standard Efficiency		0.75 … 18.5 kW	1MB10.2	5/26
SIMOTICS XP cast-iron housing					
IEC	IE3 Premium Efficiency	– Basic Line	0.18 … 200 kW	1MB15.3	5/17
		– Performance Line	1.5 … 200 kW	1MB16.3	5/17
	IE2 High Efficiency	– Basic Line	0.09 … 200 kW	1MB15.1	5/22
		– Performance Line	0.75 … 200 kW	1MB16.1	5/22

SIMOTICS DP application-specific motors

Motor version	Efficiency class		Rated power at 50 Hz (values in kW) or 60 Hz (values in hp)	Frame size – motor type	Page
				63 71 80 90 100 112 132 160 180 200 225 250 280 315 355	
Smoke extraction motors – aluminum housing					
IEC	IE3 Premium Efficiency		0.55 … 18.5 kW	1PC1303	6/9
	IE2 High Efficiency		0.37 … 18.5 kW	1PC1300	6/11
Smoke extraction motors – cast-iron housing					
IEC	IE3 Premium Efficiency		18.5 … 200 kW	1PC1304	6/10
	IE2 High Efficiency		15 … 200 kW	1PC1301	6/13
Marine motors – aluminum housing					
IEC	IE4 Super Premium Efficiency		2.2 … 37 kW	1LE1004	6/46
	IE3 Premium Efficiency		0.37 … 45 kW	1LE1003	6/46
	IE2 High Efficiency		0.18 … 45 kW	1LE1001	6/46
	IE1 Standard Efficiency		0.09 … 37 kW	1LE1002	6/46
IEC – with explosion protection	IE3 Premium Efficiency		0.37 … 18.5 kW	1MB10.3	6/49
	IE2 High Efficiency		0.37 … 18.5 kW	1MB10.1	6/49
	IE1 Standard Efficiency		0.75 … 18.5 kW	1MB10.2	6/49
Eagle Line	NEMA Premium Efficient		0.37 … 37 kW 0.5 … 50 hp	1LE1023	6/46
	NEMA Energy Efficient		0.37 … 0.55 kW 0.5 … 0.75 hp	1LE1021	6/46
Pole-changing	–		0.5 … 28 kW	1LE1011	6/46
	–		0.6 … 26 kW	1LE1012	6/46
Marine motors – cast-iron housing					
IEC	IE4 Super Premium Efficiency	– Basic Line	2.2 … 200 kW	1LE1504	6/47
			160 … 500 kW	1LE55.4	6/48
		– Performance Line	2.2 … 200 kW	1LE1604	6/47
			160 … 500 kW	1LE56.4	6/48
	IE3 Premium Efficiency	– Basic Line	0.18 … 200 kW	1LE1503	6/47
			160 … 500 kW	1LE55.3	6/48
		– Performance Line	1.5 … 200 kW	1LE1603	6/47
			160 … 500 kW	1LE56.3	6/48
	IE2 High Efficiency	– Basic Line	0.09 … 200 kW	1LE1501	6/47
		– Performance Line	0.75 … 200 kW	1LE1601	6/47
IEC – with explosion protection	IE3 Premium Efficiency	– Basic Line	0.18 … 200 kW	1MB15.3	6/49
		– Performance Line	1.5 … 200 kW	1MB16.3	6/49
	IE2 High Efficiency	– Basic Line	0.09 … 200 kW	1MB15.1	6/49
		– Performance Line	0.75 … 200 kW	1MB16.1	6/49
Eagle Line	NEMA Premium Efficient	– Basic Line	0.18 … 185 kW 0.25 … 250 hp	1LE1523	6/47
		– Performance Line	2.2 … 185 kW 3 … 250 hp	1LE1623	6/47
	NEMA Energy Efficient	– Basic Line	0.09 … 0.55 kW 0.12 … 0.75 hp	1LE1521	6/47

© Siemens AG 2018

Overview

The following table contains a list of all available special versions according to category and availability in the catalog sections where you will find them. The order codes are listed here according to the function. An alphanumerical listing of all special versions can be found in the Appendix in the Index of order codes.

Note:
Options cannot always be freely combined. It is not possible to describe every single impermissible option combination in the catalog. Incompatibility between options may result in rejection of an order when multiple options are ordered, see also in the DT Configurator:
www.siemens.com/dt-configurator

Special versions	Additional identification code **-Z** with order code and plain text if required	For further information, see page	Catalog section – page									
			2 Standard motors		3 Standard motors	4 VSD motors for converter operation		5 Explosion-proof motors		6 Smoke extraction motors	
			Aluminum series 1LE10	Cast-iron series 1LE15 1LE16	Cast-iron series 1LE5	Aluminum series 1FP10.4 1LE1092	Cast-iron series 1FP15.4 1LE1592	Aluminum series 1MB10	Cast-iron series 1MB15 1MB16	Aluminum series 1PC1300 1PC1303	Cast-iron series 1PC1301 1PC1304
Version for converter operation											
Version for converter operation in basic version with operating data SINAMICS G120 with PM240-2.	**B40**	5/7						5/38	5/42		
Version for converter operation in basic version with operating data SINAMICS S150.	**B41**	5/7						5/38	5/42		
Operating data such as order code **B40** with alternative SINAMICS converters on the rating plate • G120 with PM230 • G120 with PM240 • G120C • G120P with PM230 • G120P with PM240-2 • G120P with PM240P-2 • G120P with PM330 • G130, G150, G180 • S120 (BLM/SLM) • V20 Operating data such as the B41 order code with alternative SINAMICS converter on the rating plate • S120 (ALM)	**Y68** and converter type	5/7						5/38	5/42		
Version in accordance with standards and specifications											
VIK version	**C02**	1/28	2/105	2/113							
CCC China Compulsory Certification	**D01**	1/27	2/105	2/113						6/21	
Motor without CE marking for export outside EEA (see EU Directive 640/2009)	**D22**		2/105	2/113	3/25						
Motor exclusively for use in transportation equipment for passengers and freight transport corresponding to EVPG §1 dated February 27, 2008	**D23**				3/25						
Electrical according to NEMA MG1-12	**D30**	1/26	2/105	2/113	3/25						
Design according to UL with "Recognition Mark"	**D31**	1/26	2/105	2/113	3/25						
Ex certification for China	**D32** *New!*								5/44		
KEMCO Korea Energy Efficiency Label	**D33**	1/27	2/105	2/113							
China Energy Efficiency Label	**D34**	1/27	2/105	2/113					5/44		
Ex certificate EAC for the Eurasian customs union	**D35**	5/14						5/39	5/44		
IEC Ex certification	**D37**							5/39	5/44		
Version according to UL and CSA (Canadian regulation)	**D39**					4/43 4/99	4/47 4/103				
Canadian regulations (CSA)	**D40**		2/105	2/113	3/25						
TR CU product safety certificate EAC for Eurasian customs union	**D47**	1/28	2/105	2/113	3/25	4/99	4/103				
Version suitable for railways IC 411, EN IEC 60349, without EN 45545, with external fan and fan cover in plastic	**L90**	1/28	2/105								
Version suitable for railways IC 411, EN IEC 60349, with EN 45545, with external fan and fan cover in metal	**L91**	1/28	2/105								
Version suitable for railways IC 418, EN IEC 60349, without EN 45545, without external fan and fan cover	**L92**		2/105								

© Siemens AG 2018

Special versions	Additional identification code **-Z** with order code and plain text if required	For further information, see page	Catalog section – page									
			2 Standard motors		**3**	**4 VSD motors for converter operation**		**5 Explosion-proof motors**		**6 Smoke extraction motors**	
			Aluminum series 1LE10	Cast-iron series 1LE15 1LE16	Cast-iron series 1LE5	Aluminum series 1FP10.4 1LE1092	Cast-iron series 1FP15.4 1LE1592	Aluminum series 1MB10	Cast-iron series 1MB15 1MB16	Aluminum series 1PC1300 1PC1303	Cast-iron series 1PC1301 1PC1304
Balance and vibration severity											
Vibration severity grade B	**L00**	1/56	2/106	2/114	3/25			5/40	5/44	6/21	6/23
Balancing without feather key	**L01**	1/56	2/106	2/114	3/25	4/43	4/47	5/40	5/44	6/21	6/23
Full-key balancing	**L02**	1/56	2/106	2/114	3/25	4/43 4/99	4/47 4/103	5/40	5/44	6/21	6/23
Explosion-proof version											
Version (IP55) for Zones 2 or 22, for non-conductive dust	**B30**	5/6						5/38	5/42		
Design for Zone 2 in Ex ec IIB T3 Gc	**B31**	5/6						5/38	5/42		
VIK version	**C02**	1/28						5/38	5/42		
Colors and paint finish											
Unpainted (only cast-iron parts primed)	**S00**	1/21	2/104	2/111	3/23	4/42 4/98	4/46 4/102	5/39	5/43	6/21	6/23
Unpainted, only primed	**S01**	1/21	2/104	2/111	3/23	4/42 4/98	4/46 4/102	5/39	5/43	6/21	6/23
Special paint finish C3	**S02**	1/21	2/104	2/111	3/23	4/42 4/98	4/46 4/102	5/39	5/43		6/23
Special paint finish sea air resistant C4	**S03**	1/21	2/104	2/111	3/23	4/42 4/98	4/46 4/102	5/39	5/43	6/21	6/23
Special paint finish for offshore C5	**S04**	1/21		2/111	3/23		4/46 4/102		5/43		
Internal coating	**S05**	1/21	2/104	2/111	3/23	4/42 4/98	4/46 4/102				6/23
Top coat polyurethane	**S06**	1/21	2/104	2/111	3/23			5/39	5/43	6/21	6/23
Paint finish in other standard RAL colors: RAL 1002, 1013, 1015, 1019, 2003, 2004, 3000, 3007, 5002, 5007, 5009, 5010, 5012, 5015, 5017, 5018, 5019, 6011, 6019, 6021, 7000, 7001, 7004, 7011, 7016, 7022, 7031, 7032, 7033, 7035, 9001, 9002, 9005	**Y53** and paint finish RAL....	1/23	2/104	2/111	3/23	4/98	4/46 4/102	5/39	5/43	6/21	6/23
Paint finish in special RAL colors: For RAL colors, see "Special paint finish in special RAL colors"	**Y56** and paint finish RAL....	1/23	2/104	2/111	3/23	4/42 4/98	4/46 4/102	5/39	5/43	6/21	6/23
Heating and ventilation											
Sheet metal fan cover	**F74**	1/36	2/106	2/115	3/26	4/43 4/99	4/48 4/104				
Fan cover for textile industry	**F75**	1/36	2/106			4/43 4/99					
Metal external fan	**F76**	1/36	2/106	2/115		4/43 4/99	4/48 4/104	5/40	5/45		
Without external fan and without fan cover	**F90**	1/36	2/106	2/115	3/26	4/43 4/99				6/22	6/24
Anti-condensation heating for 230 V (2 terminals)	**Q02**	1/36	2/106	2/115	3/26	4/43 4/99	4/48 4/104	5/40	5/45		
Anti-condensation heating for 115 V (2 terminals)	**Q03**	1/36	2/106	2/115	3/26	4/43 4/99	4/48 4/104	5/40	5/45		
Anti-condensation heating for 400 V (2 terminals)	**Q06** *New!*				3/26						
Separately driven fan with non-standard voltage and/or frequency	**Y81** and customer specifications	1/80		2/115	3/26		4/104				
Coolant temperature and installation altitude											
Coolant temperature –50 to +40 °C	**D02**			2/113	3/25		4/47 4/103				
Coolant temperature -40 to +40 °C	**D03**	1/35	2/105	2/113	3/25	4/42 4/98	4/47 4/103	5/39	5/44		
Coolant temperature –30 to +40 °C	**D04**	1/35	2/105	2/113	3/25	4/42 4/98	4/47 4/103			6/21	6/23
Bearings and lubrication											
Regreasing device with M10 × 1 grease nipple according to DIN 71412-A	**L19**	1/59	2/105	2/114	3/25				5/44		6/23
Located bearing DE	**L20**	1/58	2/105	2/114	3/25	4/43 4/99	4/47 4/103	5/40	5/44		
Located bearing NDE	**L21**	1/58	2/105	2/114		4/43 4/99	4/47 4/103	5/40	5/44		
Bearing design for increased cantilever forces	**L22**	1/58	2/105	2/114	3/25	4/43 4/99	4/47 4/103	5/40	5/44	6/21	6/23
Regreasing device	**L23**	1/59	2/105	2/114		4/43 4/99	4/47 4/103	5/40	5/44	6/21	6/23

© Siemens AG 2018

Special versions	Additional identification code **-Z** with order code and plain text if required	For further information, see page	Catalog section – page									
			2 Standard motors		3	4 VSD motors for converter operation		5 Explosion-proof motors		6 Smoke extraction motors	
			Aluminum series 1LE10	Cast-iron series 1LE15 1LE16	Cast-iron series 1LE5	Aluminum series 1FP10.4 1LE1092	Cast-iron series 1FP15.4 1LE1592	Aluminum series 1MB10	Cast-iron series 1MB15 1MB16	Aluminum series 1PC1300 1PC1303	Cast-iron series 1PC1301 1PC1304
Bearings and lubrication (continued)											
Hot bearing grease	**L24** *New!*				3/25						
Bearings reinforced at both ends for DE and NDE, bearing size 63	**L25**	1/58	2/105	2/114		4/43 4/99	4/47 4/103	5/40	5/44		
Bearings reinforced at both DE and NDE, DE bearings for increased cantilever forces	**L28**			2/114			4/47 4/103				
Drainage for used grease	**L30** *New!*				3/25						
Special version with higher speeds	**L37** *New!*				3/25						
Bearing insulation DE	**L50**	1/58		2/114	3/25		4/103			6/21	6/23
Bearing insulation NDE	**L51**	1/58		2/114	3/25		4/103		5/44	6/21	6/23
Measuring nipple for SPM shock pulse measurement for bearing inspection	**Q01**	1/58	2/105	2/114	3/25	4/43 4/99	4/47 4/103	5/40	5/44	6/21	6/23
Rating plate and additional rating plates											
Additional rating plate for voltage tolerance	**B07**	1/30	2/106	2/115	3/26					6/22	6/24
Second rating plate, loose	**M10**	1/30	2/106	2/115	3/26	4/43 4/99	4/48 4/104	5/40	5/45	6/22	6/24
Rating plate, stainless steel	**M11**	1/30	2/106	2/115	3/26	4/43 4/99	4/48 4/104	5/40	5/45		
Additional rating plate with deviating rating plate data	**Y80** and customer specifications	1/30	2/106	2/115	3/26			5/40	5/45	6/22	6/24
Additional rating plate with customer specifications	**Y82** and customer specifications	1/30	2/106	2/115	3/26	4/43 4/99	4/48 4/104	5/40	5/45	6/22	6/24
Additional information on rating plate and on package label (max.20 characters)	**Y84** and customer specifications	1/30	2/106	2/115	3/26	4/43 4/99	4/48 4/104	5/40	5/45	6/22	6/24
Adhesive label, supplied loose (printed with: Article No., Serial No.; 2 lines of text)	**Y85** and customer specifications	1/30	2/106	2/115	3/26	4/43 4/99	4/48 4/104				
Mechanical version and degrees of protection											
Low-noise version for 2-pole motors with clockwise direction of rotation	**F77**	1/57	2/104	2/113	3/24			5/39	5/44		
Low-noise version for 2-pole motors with counterclockwise direction of rotation	**F78**	1/57	2/104	2/113	3/24			5/39	5/44		
Prepared for mountings, centering hole only	**G40**	1/79	2/104	2/113		4/42 4/98	4/47 4/103				
Prepared for mountings with D12 shaft	**G41**	1/79	2/104	2/113	3/24	4/42 4/98	4/47 4/103				
Prepared for mountings with D16 shaft	**G42**	1/79	2/104	2/113	3/24	4/42 4/98	4/47 4/103				
Mechanical protection for encoder	**G43**	1/79	2/104	2/113	3/24	4/42 4/98	4/47 4/103	5/39	5/44		
Protective cover	**H00**	1/50	2/105	2/113	3/24	4/42 4/98	4/47 4/103	5/39	5/44	6/21	
Screwed-on (instead of cast) feet	**H01**	1/41	2/105	2/113		4/42 4/98	4/47 4/103			6/21	6/23
Vibration-proof version; vibration resistance to Class 3M4 according to IEC 60721-3-3:1994	**H02**	1/77	2/105	2/113	3/24	4/42 4/98	4/47 4/103	5/39	5/44		
Condensation drainage holes	**H03**	1/50	2/105	2/113	3/24	4/42 4/98		5/39	5/44		
Rust-resistant screws (externally)	**H07**	1/77	2/105	2/113	3/24	4/42 4/98	4/47 4/103	5/39	5/44	6/21	6/23
Housing with screw mounting	**H10**	1/41	2/105			4/42	4/47				
IP65 degree of protection	**H20**	1/50	2/105	2/113	3/24	4/42 4/98	4/47 4/103	5/39	5/44	6/21	6/23
IP54 degree of protection	**H21**			2/113	3/24		4/47 4/103				
IP56 degree of protection	**H22**	1/50	2/105	2/113	3/24	4/42 4/98	4/47 4/103	5/39	5/44	6/21	6/23
Drive-end seal for flange-mounted motors, oil-tight to 0.1 bar	**H23**	1/55	2/105	2/113	3/24	4/42 4/98	4/47 4/103	5/39	5/44		
Viton sealing ring	**H25** *New!*				3/24						
Grounding brush for converter operation	**L52**	1/79		2/113	3/24		4/103				

© Siemens AG 2018

Special versions	Additional identification code **-Z** with order code and plain text if required	For further information, see page	Catalog section – page									
			2 Standard motors		**3**	**4 VSD motors for converter operation**		**5 Explosion-proof motors**		**6 Smoke extraction motors**	
			Aluminum series 1LE10	Cast-iron series 1LE15 1LE16	Cast-iron series 1LE5	Aluminum series 1FP10.4 1LE1092	Cast-iron series 1FP15.4 1LE1592	Aluminum series 1MB10	Cast-iron series 1MB15 1MB16	Aluminum series 1PC1300 1PC1303	Cast-iron series 1PC1301 1PC1304
Modular technology – Basic versions											
Mounting of holding brake (standard assignment)	**F01**	1/81	2/104	2/112	3/23	4/42 4/98	4/46 4/102				
Mounting of brake for higher switching frequency (operating brake)	**F02**	1/81	2/104			4/42 4/98					
Mounting of PRECIMA brake	**F04**	1/93		2/112							
Mounted separately driven fan	**F70**	1/80	2/104	2/112	3/23	4/42 4/98	4/46 4/102	5/39	5/43		
Mounting of 1XP8012-10 (HTL) rotary pulse encoder	**G01**	1/98	2/104	2/112	3/23	4/42 4/98	4/46 4/102				
Mounting of 1XP8012-20 (TTL) rotary pulse encoder	**G02**	1/98	2/104	2/112	3/23	4/42 4/98	4/46 4/102				
Mounting of Kübler Sendix 5020 HTL, 1024 I rotary pulse encoder	**G11**	1/104	2/104	2/112	3/23						
Mounting of Kübler Sendix 5020 TTL, 1024 I rotary pulse encoder	**G12**	1/104	2/104	2/112	3/23						
Modular technology – Additional versions											
Brake supply voltage 24 V DC	**F10**	1/82	2/104	2/112	3/23	4/42 4/98	4/46 4/102				
Brake supply voltage 230 V AC, 50/60 Hz	**F11**	1/82	2/104	2/112	3/23	4/42 4/98	4/46 4/102				
Brake supply voltage 400 V AC, 50/60 Hz	**F12**	1/82	2/104	2/112	3/23	4/42 4/98	4/46 4/102				
Backstop, counterclockwise motion blocked, clockwise direction of rotation	**F40**	1/105		2/112	3/23		4/46				
Backstop, clockwise motion blocked, counterclockwise direction of rotation	**F41**	1/105		2/112	3/23		4/46				
Mechanical manual brake release with lever (no locking)	**F50**	1/86	2/104	2/112		4/42 4/98	4/46 4/102				
Motor connection and terminal box											
External grounding	**H04**	1/41	2/102	2/109		4/41 4/97	4/45 4/101			6/21	
Terminal box on NDE	**H08**	1/41	2/102	2/109	3/21	4/41 4/97	4/45 4/101			6/21	6/23
Second external grounding	**H70**	1/41		2/109	3/21		4/45 4/101				
Terminal box rotated through 90°, entry from DE	**R10**	1/42	2/102	2/109	3/21	4/41 4/97	4/45 4/101	5/38	5/42		
Terminal box rotated through 90°, entry from NDE	**R11**	1/42	2/102	2/109	3/21	4/41 4/97	4/45 4/101	5/38	5/42		
Terminal box rotated through 180°	**R12**	1/42	2/102	2/110	3/22	4/41 4/97	4/45 4/101	5/38	5/42	6/21	6/23
Terminal box in position 0°; connection from right	**R13**	1/42	2/102			4/41 4/97				6/21	6/23
One EMC cable gland	**R14**			2/110	3/22		4/45 4/101				
One metal cable gland	**R15**	1/43	2/102	2/110	3/22	4/41 4/97	4/45 4/101				
EMC cable gland, maximum configuration	**R16**			2/110	3/22		4/45 4/101				
Stud terminal for cable connection, accessories pack (3 items)	**R17**			2/110	3/22		4/101		5/42		
Metal cable gland, maximum configuration	**R18**		2/102	2/110	3/22	4/41		5/38	5/42		
Saddle terminal for connection without cable lug, accessories pack	**R19**			2/110	3/22		4/101		5/42		
3 cables protruding, 0.5 m long	**R20**	1/43	2/102	2/110		4/41 4/97					
3 cables protruding, 1.5 m long	**R21**	1/43	2/102	2/110	3/22	4/41					
6 cables protruding, 0.5 m long	**R22**	1/43	2/102	2/110		4/41 4/97					
6 cables protruding, 1.5 m long	**R23**	1/43	2/102	2/110	3/22	4/41					
6 cables protruding, 3 m long	**R24**	1/43	2/103	2/110	3/22	4/41					
Reduction piece for M cable gland in accordance with British Standard, both cable entries mounted	**R30**	1/43	2/103	2/110							

© Siemens AG 2018

Special versions	Additional identification code **-Z** with order code and plain text if required	For further information, see page	Catalog section – page									
			2 Standard motors		**3**	**4 VSD motors for converter operation**		**5 Explosion-proof motors**		**6 Smoke extraction motors**	
			Aluminum series 1LE10	Cast-iron series 1LE15 1LE16	Cast-iron series 1LE5	Aluminum series 1FP10.4 1LE1092	Cast-iron series 1FP15.4 1LE1592	Aluminum series 1MB10	Cast-iron series 1MB15 1MB16	Aluminum series 1PC1300 1PC1303	Cast-iron series 1PC1301 1PC1304
Motor connection and terminal box (continued)											
Larger terminal box	**R50**	1/41	2/103	2/110	3/22	4/41 4/97	4/45 4/101	5/38	5/42		
Terminal box without cable entry opening	**R51**			2/110	3/22		4/45 4/101				
Drilled removable entry plate	**R52**	1/48		2/110	3/22		4/45 4/101				
Undrilled removable entry plate	**R53**	1/48		2/110	3/22		4/45 4/101				
Auxiliary terminal box, aluminum	**R60**		2/103								
Cast-iron auxiliary terminal box (small)	**R62**	1/48		2/110	3/22		4/45 4/102		5/42		
Larger cast-iron terminal box	**R63** *New!*	1/48			3/22						
Motor connector Han-Drive 10e for 230 VΔ/400 VY	**R70**	1/43	2/103				4/41 4/97				
Motor connector Han-Drive 10e EMC for 230 VΔ/400 VY	**R71**	1/43	2/103				4/41 4/97				
Small motor connector CQ12 with EMC	**R72**	1/43	2/103								
Small motor connector CQ12 without EMC	**R73**	1/43	2/103								
Silicon-free version	**R74**			2/110	3/22		4/102				
Non-standard threaded through hole (NPT or G thread)	**Y61** and customer specifications			2/110	3/22		4/45 4/102				
Motor protection											
1 or 3 PTC thermistors – for tripping (2 terminals)	**Q11**	1/38	2/102	2/109	3/21	4/41 4/97	4/45 4/101				
2 or 6 PTC thermistors – for alarm and tripping (4 terminals)	**Q12**	1/38	2/102	2/109	3/21	4/41 4/97	4/45 4/101				
1 KTY84-130 temperature sensor (2 terminals)	**Q23**		2/102	2/109	3/21	4/41 4/97	4/45 4/101				
2 KTY84-130 temperature sensors (4 terminals)	**Q25**		2/102	2/109	3/21	4/41 4/97	4/45 4/101				
3 bimetal sensors (normally closed contacts) for tripping (2 terminals)	**Q31**		2/102	2/109	3/21	4/41 4/97	4/45 4/101				
6 bimetal sensors (normally closed contacts) for alarm and tripping (4 terminals)	**Q32**		2/102	2/109	3/21	4/41 4/97	4/45 4/101				
3 bimetal sensors (normally closed contacts) for tripping (6 terminals)	**Q33**		2/102	2/109	3/21	4/41 4/97	4/45 4/101				
6 bimetal sensors (normally closed contacts) for alarm and tripping (12 terminals)	**Q34**		2/102	2/109	3/21	4/41	4/45 4/101				
1 Pt1000 resistance thermometer (2 terminals)	**Q35**	1/40	2/102	2/109	3/21	4/41 4/97	4/45 4/101	5/38	5/42		
2 Pt1000 resistance thermometers (4 terminals)	**Q36**	1/40	2/102	2/109	3/21	4/41 4/97	4/45 4/101	5/38	5/42		
3 Pt100 resistance thermometers – 2-wire input (6 terminals)	**Q60**	1/40	2/102	2/109	3/21	4/41 4/97	4/45 4/101				
6 Pt100 resistance thermometers – 2-wire input (12 terminals)	**Q61**	1/40	2/102	2/109	3/21	4/41 4/97					
1 Pt100 resistance thermometer – 2-wire input (2 terminals)	**Q62**	1/40	2/102	2/109	3/21	4/41 4/97	4/45 4/101				
3 Pt100 resistance thermometers – 3-wire input (9 terminals)	**Q63**	1/40	2/102	2/109	3/21	4/41 4/97	4/45 4/101				
6 Pt100 resistance thermometers – 3-wire input (18 terminals)	**Q64**	1/40	2/102	2/109	3/21	4/41 4/97	4/45 4/101				
2 Pt100 screw-in thermometers in basic configuration for bearings (2 terminals)	**Q72**	1/40	2/102	2/109	3/21	4/41 4/97	4/45 4/101		5/42		
2 Pt100 screw-in thermometers in 3-wire input for bearing (6 terminals)	**Q78**	1/40	2/102	2/109	3/21	4/41 4/97	4/45 4/101		5/42		
2 Pt100 double screw-in thermometers in 3-wire input for bearing (12 terminals)	**Q79**	1/40	2/102	2/109	3/21	4/41 4/97	4/45 4/101		5/42		
Special technology											
Mounting of LL 861 900 220 rotary pulse encoder	**G04**	1/99	2/104	2/112	3/24	4/42 4/98	4/46 4/102				
Mounting of HOG 9 DN 1024 I rotary pulse encoder	**G05**	1/100	2/104	2/112	3/24	4/42 4/98	4/46 4/102				
Mounting of HOG 10 D 1024 I rotary pulse encoder	**G06**	1/103	2/104	2/112	3/24	4/42 4/98	4/46 4/102				

© Siemens AG 2018

Special versions	Additional identification code **-Z** with order code and plain text if required	For further information, see page	Catalog section – page									
			2 Standard motors		**3**	**4 VSD motors for converter operation**		**5 Explosion-proof motors**		**6 Smoke extraction motors**	
			Aluminum series 1LE10	Cast-iron series 1LE15 1LE16	Cast-iron series 1LE5	Aluminum series 1FP10.4 1LE1092	Cast-iron series 1FP15.4 1LE1592	Aluminum series 1MB10	Cast-iron series 1MB15 1MB16	Aluminum series 1PC1300 1PC1303	Cast-iron series 1PC1301 1PC1304
Special technology (continued)											
Mounting of POG 10D rotary pulse encoder (only in combination with separately driven fan or brake)	**G07**	1/102		2/112	3/24		4/46 4/102				
Mounting of POG9 rotary pulse encoder (only in combination with separately driven fan or brake)	**G08**	1/101		2/112	3/24		4/46 4/102				
Mounting of HOG 10 DN 1024 I rotary pulse encoder, terminal box moisture protection	**G15**			2/112	3/24						
Mounting of HOG 10 DN 1024 I rotary pulse encoder, terminal box dust protection	**G16**			2/112	3/24						
Mounting of explosion-proof rotary pulse encoder for use in Zones 2, 21, and 22	**G30**	5/10						5/39	5/43		
Mounting of a special type of rotary pulse encoder	**Y70** and customer specifications						4/46 4/102				
Mounting of HOG 10 DN 1024 I + FSL rotary pulse encoder, (integrated centrifugal switch, speed ... rpm), terminal box moisture protection	**Y74** and spec. speed .... rpm			2/112	3/24						
Mounting of HOG 10 DN 1024 I + FSL rotary pulse encoder, (integrated centrifugal switch, speed .... rpm), terminal box dust protection	**Y76** and spec. speed .... rpm			2/112	3/24						
Mounting of HOG 10 DN 1024 I + ESL 93 rotary pulse encoder, (integrated electronic speed switch, speed ... rpm), terminal box dust protection	**Y79** and spec. speed (max. 3) .... rpm			2/112	3/24						
Extension of the liability for defects											
Extension of the liability for defects period by 12 months to a total of 24 months (2 years) from delivery	**Q80**	1/24		2/115	3/26		4/48 4/104				
Extension of the liability for defects period by 18 months to a total of 30 months (2.5 years) from delivery	**Q81** *New!*				3/26						
Extension of the liability for defects period by 24 months to a total of 36 months (3 years) from delivery	**Q82**	1/24		2/115	3/26		4/48 4/104				
Extension of the liability for defects period by 30 months to a total of 42 months (3.5 years) from delivery	**Q83** *New!*				3/26						
Extension of the liability for defects period by 36 months to a total of 48 months (4 years) from delivery	**Q84** *New!*				3/26						
Extension of the liability for defects period by 42 months to a total of 60 months (5 years) from delivery	**Q85** *New!*				3/26						
Packaging, safety notes, documentation and test certificates											
Printed German/English Operating Instructions (compact) enclosed in each wire-lattice pallet	**B01**		2/107			4/44 4/100					
Acceptance test certificate 3.1 in accordance with EN 10204	**B02**	1/24	2/107	2/115	3/26	4/44 4/100	4/48 4/104	5/41	5/45	6/22	6/24
Printed German/English Operating Instructions enclosed	**B04**	1/24	2/107	2/115	3/26	4/44 4/100	4/48 4/104	5/41	5/45	6/22	6/24
Without "Made in manufacturing country" marking	**B13** *New!*				3/26						
Equivalent circuit diagram	**B51** *New!*				3/26						
Starting diagram (torque vs. speed and current vs. speed)	**B52** *New!*				3/26						
Document – Electrical datasheet	**B60**		2/107	2/115	3/26	4/44 4/100	4/48 4/104				
Document – Order dimensional drawing	**B61**		2/107	2/115	3/26	4/44 4/100	4/48 4/104				
Standard test (routine test) with acceptance	**B65**			2/115	3/26		4/48 4/104			6/22	6/24
Temperature test without acceptance	**B67** *New!*				3/26						
Temperature test with acceptance	**B68** *New!*				3/26						

© Siemens AG 2018

Special versions	Additional identification code -Z with order code and plain text if required	For further information, see page	Catalog section – page									
			2 Standard motors		3	4 VSD motors for converter operation		5 Explosion-proof motors		6 Smoke extraction motors	
			Aluminum series 1LE10	Cast-iron series 1LE15 1LE16	Cast-iron series 1LE5	Aluminum series 1FP10.4 1LE1092	Cast-iron series 1FP15.4 1LE1592	Aluminum series 1MB10	Cast-iron series 1MB15 1MB16	Aluminum series 1PC1300 1PC1303	Cast-iron series 1PC1301 1PC1304
Packaging, safety notes, documentation and test certificates (continued)											
Type test with heat run for vertical motors, without acceptance	**B80** *New!*				3/27						
Type test with heat run for vertical motors, with acceptance	**B81** *New!*				3/27						
Type test with heat run for horizontal motors, without acceptance	**B82**	1/24		2/115	3/27						
Type test with heat run for horizontal motors, with acceptance	**B83**	1/24	2/107	2/115	3/27	4/44 4/100	4/48 4/104	5/41	5/45	6/22	6/24
"Basic" documentation package	**B90** *New!*		2/107	2/115	3/27	4/44 4/100	4/48 4/104	5/41	5/45	6/22	6/24
"Advanced" documentation package	**B91** *New!*		2/107	2/115	3/27	4/44 4/100	4/48 4/104	5/41	5/45	6/22	6/24
"Projects" documentation package	**B92** *New!*		2/107	2/115	3/27	4/44 4/100	4/48 4/104	5/41	5/45	6/22	6/24
Wire-lattice pallet packaging	**B99**	1/24	2/107			4/44 4/100		5/41	5/45		
Connected in star for dispatch	**M01**	1/24	2/107	2/115	3/27	4/44 4/100	4/48 4/104	5/41	5/45		
Connected in delta for dispatch	**M02**	1/24	2/107	2/115	3/27	4/44 4/100	4/48 4/104	5/41	5/45		
Printed Operating Instructions (Compact) for explosion-proof motors enclosed in other official EU languages	**Y98** and customer specifications							5/41	5/45		
Shaft and rotor											
Shaft extension with standard dimensions, without feather keyway	**L04**	1/54	2/106	2/114	3/25	4/43 4/99	4/47 4/103	5/40	5/45	6/22	6/23
Standard, cylindrical shaft extension (second shaft extension) NDE acc. to EN 50347	**L05**	1/54	2/106	2/114	3/25	4/43 4/99	4/47 4/103	5/40	5/45	6/22	6/23
Standard shaft made of stainless steel (e.g. 1.4021)	**L06**	1/54	2/106	2/114	3/25	4/43 4/99	4/47 4/103	5/40	5/45		
Concentricity of shaft extension in accordance with DIN 42955 Tolerance R	**L07**	1/55	2/106	2/114	3/25	4/43 4/99	4/47 4/103	5/40	5/45	6/22	6/24
Concentricity of shaft extension, coaxiality, and linear movement in accordance with DIN 42955 Tolerance R for flange-mounted motors	**L08**	1/55	2/106	2/114	3/25	4/43 4/99	4/47 4/103	5/40	5/45	6/22	6/24
Non-standard cylindrical shaft extension, DE	**Y58** and customer specifications	1/54	2/106	2/114	3/26	4/43 4/99	4/47 4/104	5/40	5/45	6/22	6/24
Non-standard cylindrical shaft extension, NDE	**Y59** and customer specifications	1/54	2/106	2/114	3/26	4/43 4/99	4/47 4/104	5/40	5/45	6/22	6/24
Special shaft steel	**Y60** and customer specifications			2/114	3/26		4/47 4/104			6/22	6/24
Windings and insulation											
Temperature class 155 (F), utilized according to 155 (F), with service factor	**N01**	1/33	2/103	2/110	3/22						
Temperature class 155 (F), utilized acc. to 155 (F), with increased power	**N02**	1/33	2/103	2/110	3/22						
Temperature class 155 (F), utilized acc. to 155 (F), with increased coolant temperature	**N03**	1/33	2/103	2/110	3/22						
Temperature class 155 (F), utilized acc. to 130 (B), coolant temperature 45 °C, derating approx. 4 %	**N05**	1/33	2/103	2/110	3/22			5/38	5/43		
Temperature class 155 (F), utilized acc. to 130 (B), coolant temperature 50 °C, derating approx. 8 %	**N06**	1/33	2/103	2/110	3/22			5/38	5/43		
Temperature class 155 (F), utilized acc. to 130 (B), coolant temperature 55 °C, derating approx. 13 %	**N07**	1/33	2/103	2/110	3/22			5/38	5/43		
Temperature class 155 (F), utilized acc. to 130 (B), coolant temperature 60 °C, derating approx. 18 %	**N08**	1/33	2/103	2/111	3/22			5/38	5/43		
Temperature class 180 (H)	**N10**	1/33	2/103	2/111	3/22						
Temperature class 180 (H) at rated power and max. CT 60 °C	**N11**	1/33	2/103	2/111	3/22	4/42	4/46				
Increased air humidity/temperature with 30 to 60 g water per m^3 of air	**N30**	1/33	2/103	2/111	3/22	4/42 4/97	4/46 4/102	5/38	5/43	6/21	6/23

© Siemens AG 2018

Special versions	Additional identification code **-Z** with order code and plain text if required	For further information, see page	Catalog section – page								
			2 Standard motors		**3**	**4 VSD motors for converter operation**		**5 Explosion-proof motors**		**6 Smoke extraction motors**	
			Aluminum series 1LE10	Cast-iron series 1LE15 1LE16	Cast-iron series 1LE5	Aluminum series 1FP10.4 1LE1092	Cast-iron series 1FP15.4 1LE1592	Aluminum series 1MB10	Cast-iron series 1MB15 1MB16	Aluminum series 1PC1300 1PC1303	Cast-iron series 1PC1301 1PC1304
Windings and insulation (continued)											
Increased air humidity/temperature with 60 to 100 g water per m^3 of air	**N31**	1/33	2/103	2/111	3/22	4/42	4/46 4/102	5/39	5/43		
Temperature class 155 (F), utilized acc. to 130 (B), with higher coolant temperature and/or installation altitude	**Y50** and spec. power, CT .. °C or IA .... m above sea level	1/33	2/103	2/111	3/22			5/39	5/43		
Temperature class 155 (F), utilized according to 155 (F), other requirements	**Y52** and spec. power, CT .. °C or IA .... m above sea level	1/33	2/103	2/111	3/22						
Temperature class 180 (H), utilized according to 155 (F)	**Y75** and spec. power, CT .. °C or IA .... m above sea level	1/33	2/103	2/111	3/22						
			6 Marine motors								
Marine version – Acceptance/certification											
Individual acceptance by marine classification society	**B10**		6/46 … 6/49								
Type test with heat run for vertical motors, with acceptance	**B81** *New!*		6/48								
Type test with heat run for horizontal motors, with acceptance	**B83**		6/46 … 6/49								
Marine version – Basic version											
With type test certificate according to Lloyds Register (LR), CT 45 °C, temperature class 155 (F), utilized according to 155 (F)	**E21**		6/46 … 6/49								
With type test certificate according to Bureau Veritas (BV), CT 45 °C, temperature class 155 (F), utilized according to 155 (F)	**E31**		6/46, 6/47, 6/49								
With type test certificate according to Registro Italiano Navale (RINA), CT 45 °C, temperature class 155 (F), utilized according to 155 (F)	**E41**		6/46 … 6/49								
With type test certificate according to Russian Maritime Register (RS), CT 45 °C, temperature class 155 (F), utilized according to 155 (F)	**E46**		6/46 … 6/49								
With type test certificate according to DNV GL Maritime, CT 45 °C, temperature class 155 (F), utilized according to 155 (F)	**E51**		6/46 … 6/49								
With type test certificate according to American Bureau of Shipping (ABS), CT 50 °C, temperature class 155 (F), utilized according to 155 (F)	**E52**		6/46 … 6/49								
With type test certificate according to Korean Register of Shipping (KR), CT 45 °C, temperature class 155 (F), utilized according to 155 (F)	**E54**		6/46, 6/47, 6/49								

© Siemens AG 2018

Cut-away diagram of a low-voltage motor

Overview

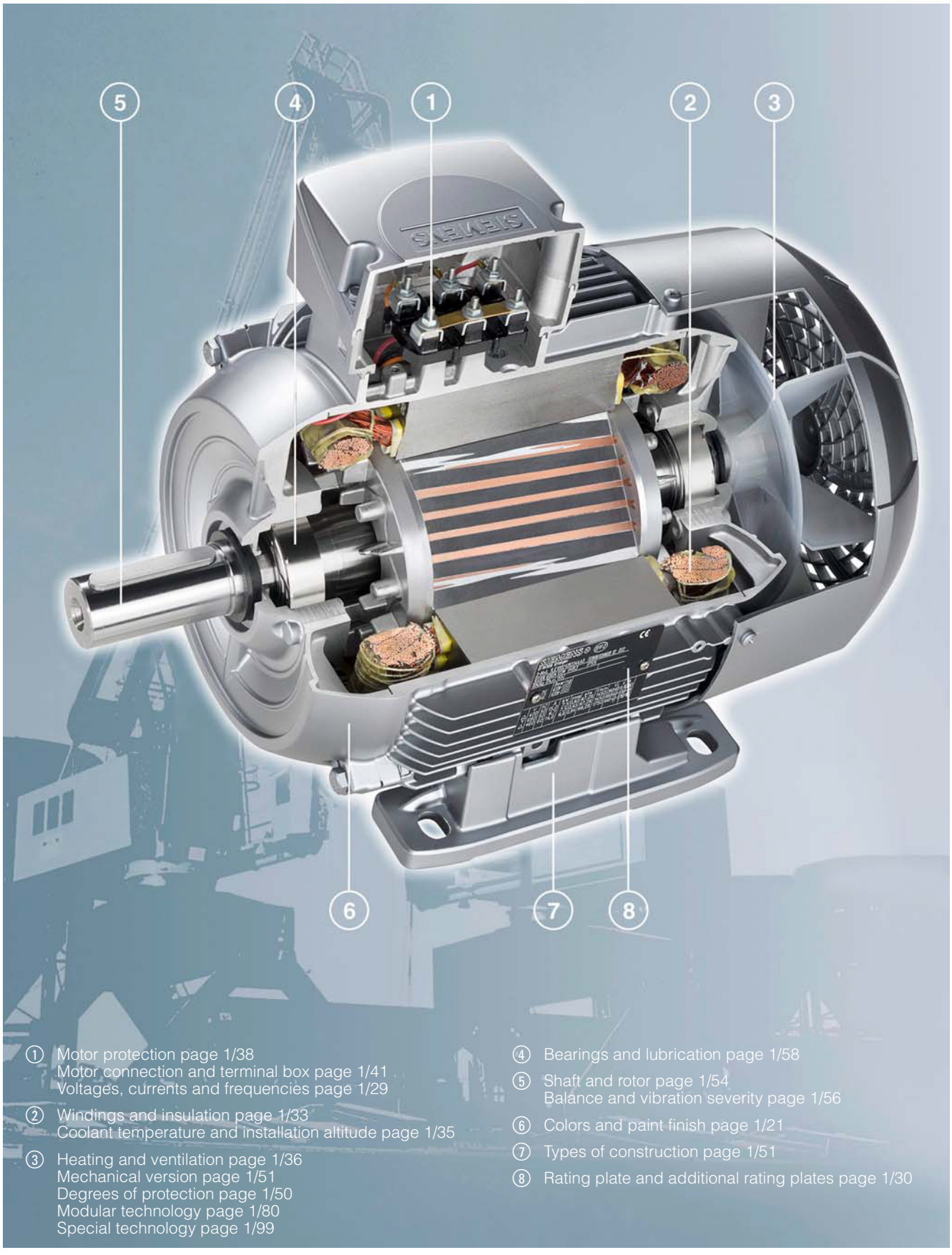

① Motor protection page 1/38
Motor connection and terminal box page 1/41
Voltages, currents and frequencies page 1/29

② Windings and insulation page 1/33
Coolant temperature and installation altitude page 1/35

③ Heating and ventilation page 1/36
Mechanical version page 1/51
Degrees of protection page 1/50
Modular technology page 1/80
Special technology page 1/99

④ Bearings and lubrication page 1/58

⑤ Shaft and rotor page 1/54
Balance and vibration severity page 1/56

⑥ Colors and paint finish page 1/21

⑦ Types of construction page 1/51

⑧ Rating plate and additional rating plates page 1/30

© Siemens AG 2018

Overview

To protect the drives against corrosion and external influences, high-quality paint systems are available in various colors.

	Additional identification code **–Z** with order code						
Standard version	**S00**	**S01**	**S02**	**S03**	**S04**	**S05**	**S06**
Paint finish, suitability of paint finish for climate group in accordance with IEC 60721-2-1							
Standard paint finish C2	Unpainted, but unfinished cast-iron surfaces are primed	Unpainted, motor primed	Special paint finish C3	Special paint finish system "sea air resistant" C4	Special paint finish system "offshore" C5	Interior paint finish, all bare internal components primed with rust inhibitor [1]	Polyurethane-based top coat, can only be ordered with **S03** or **S04**
Use							
Moderate (extended) for indoor and outdoor installation under a roof not directly exposed to weather conditions.	The motors can be supplied unpainted on request.	The motors can be supplied with just a primer coat on request.	Worldwide (global) for outdoor installation in direct sunlight and/or exposed to weather conditions.	Recommended for indoor or outdoor installation directly exposed to weather conditions, industrial climate with moderate SO_2 exposure, VIK requirements, inshore maritime climate, but not offshore maritime climate, e.g. for crane drives and in the paper industry.	Recommended for outdoor installations exposed to direct weather conditions, industrial climate with moderate SO_2 exposure, and offshore maritime climate, e.g. for crane drives.	The motors can be supplied with internal paint finish on request. Recommended when there is a risk of heavy condensate formation.	Exposure to direct sunlight (UV light) may cause a change in color. When color stability is a requirement, a polyurethane-based paint system is recommended for the top coat (RAL 7030). Colors other than RAL 7030 are available on request.
Test requirements according to EN ISO 12944-2 Corrosivity Category							
C2	–	–	C3	C4	C5	–	–
Total film thickness – nominal film thickness in µm [2] [3]							
Motors in aluminum version							
2-K epoxy resin							
30 [4] [5]	–	30	60	120	–	–	–
Polyurethane/**S06**							
–	–	–	–	120	–	–	Film thickness similar to S03/S04
Motors in cast-iron version							
2-K epoxy resin							
60	30	60	90	150	170 [6]	–	–
Polyurethane/**S06**							
–	–	–	–	150	170 [6]	–	Film thickness similar to S03/S04
Resistance							
			For corrosive atmospheres up to 1 % acid and alkali concentration or permanent dampness in sheltered rooms.	Chemical exposure up to 5 % acid and alkali concentration.	Chemical exposure up to 5 % acid and alkali concentration.		Sunlight
Temperature range							
Up to 120 °C for brief periods Up to 100 °C continuously	–	–	Up to 140 °C for brief periods Up to 120 °C continuously	–40 … 140 °C	–40 … 140 °C		
Rel. air humidity at (temperature)							
60 % (40 °C)	–	–	100 % (40 °C)	75 % (50 °C)	75 % (60 °C)		

Table continues on the next page.

© Siemens AG 2018

Overview (continued)

Standard version	Additional identification code **–Z** with order code **S00**	**S01**	**S02**	**S03**	**S04**	**S05**	**S06**
Suitability for recoating [7]							
	Can be recoated within 1 week						
Pre-treatment of parts							
	All parts cleaned and degreased, steel and cast-iron parts sandblasted						
Drying							
	All layers oven-dried						
Top coat colors							
Standard version	RAL 7030 (stone gray)						
Available colors	Alternative standard and special RAL colors must be ordered with order code **Y53** or **Y56** and specification in plain text of the required RAL number (see tables for order codes **Y53** and **Y56** on the following page for selection of available RAL numbers/RAL colors). **S06** is available only in standard RAL 7030						
Treatment of bare metal areas of shaft extensions and flanges							
	Coated with anti-corrosion agent that repels water and palm sweat						

Note:

For transport, the bare parts are coated with anti-corrosion paint which will last for a limited amount of time.

1) Machined laminated rotor core, shaft, inner diameter of cast-iron housing, interior surfaces of cast-iron bearing plates.

2) Total film thickness:
- The specified film thickness represents average values for the external motor surfaces
- Unpainted or one layer of paint (30 µm) less beneath the fan cover
- The film thickness may differ at inaccessible locations (pockets/ recesses or bases of ribs)

The film thickness specified for aluminum/cast-iron versions refers not only to motors, but also to components such as the bearing plate and housing. Motors are also available in an aluminum/cast-iron composite design.

3) The paint coat can become electrostatically charged where there is a thick film. Electrostatic discharges can occur. There is a risk of explosion if potentially explosive mixtures are also present at this moment. This can result in death, serious injury or material damage. When painted surfaces are recoated, one of the following conditions must be fulfilled:
- Limit the total paint film thickness according to the explosion protection group:
  - IIA, IIB: Total paint film thickness ≤ 2 mm
  - IIC: Total paint film thickness ≤ 0.2 mm for motors of group II (gas)
- Limit the surface resistance of the paint used:
  - Surface resistance ≤ 1 GΩ for motors of groups II and III (gas and dust)
- Charge transfer limit:
  - 60 nC for Group I or Group IIA devices
  - 25 nC for Group IIB devices
  - 10 nC for Group IIC devices
  - 200 nC for Group III devices
- Breakdown voltage ≤ 4 kV for explosion group III (dust only)
  Note:
  Paints for IIC with film thickness exceeding 200 µm are optionally available. Paints with film thickness exceeding 200 µm have been tested for electrostatic charging. Motors with a coating thickness exceeding 200 µm may only be painted over if the conditions mentioned above are complied with.
- Order code **S06** (polyurethane-based top coat) is not admissible for motors with type of protection Ex tb and Ex tc. Product has not yet been tested for electrostatic discharge in environments with explosive dusts.

4) Aluminum motors/components without a paint finish already meet the requirements for corrosivity class C2. It is not therefore necessary to apply paint to components that are not visible. Paint is therefore applied only for the purpose of coloring.

5) Aluminum motors with cast-iron components (e.g. DE bearing plate) have a film thickness of > 30 µm on cast-iron components.

6) 50 µm zinc galvanized layer + 120 µm paint film thickness.

7) Primers, water-based 2-K epoxy resin paints and polyurethane-based paints can be overpainted with paints of the same kind if the motors are in the original packaging and are still covered by the warranty. A suitability test should be conducted before any recoating work is undertaken if the customer intends to use a coating of a different kind to overpaint the motor. Alternatively, a test in accordance with EN ISO 16927 "Determination of the overcoatability and recoatability of a coating" can be requested and ordered.

© Siemens AG 2018

Overview (continued)

Paint finish in other standard RAL colors – Order code Y53 (RAL number is required in plain text)

RAL No.	Color name	RAL No.	Color name
3007	Black red	7000	Squirrel gray
5002	Ultramarine blue	7001	Silver gray
5007	Brilliant blue	7004	Signal gray
5009	Azure blue	7011	Iron gray
5010	Gentian blue	7016	Anthracite gray
5015	Sky blue	7022	Umbra gray
5017	Traffic blue	7031	Blue gray
5018	Turquoise blue	7032	Pebble gray
5019	Capri blue	7033	Cement gray
6011	Reseda green	7035	Light gray
6021	Pale green	9005	Jet black

The following weakly covering paints must be applied at least twice owing to their poor opacity. The standard paint finish for these colors is not possible and must be ordered with **S02**, **S03**, or **S04**.

RAL No.	Color name
1002	Sand yellow
1013	Oyster white
1015	Light ivory
1019	Gray beige
2003	Pastel orange
2004	Pure orange
3000	Flame red
5012	Light blue
6019	Pastel green
9001	Cream white
9002	Gray white

Paint finish in special RAL colors – Order code Y56 (RAL number is required in plain text)

RAL No.	Color name	RAL No.	Color name
3004	Purple red	6034	Pastel turquoise
3011	Brown red	6034	Pastel turquoise
3015	Light pink	7005	Mouse gray
3020	Traffic red	7009	Green gray
4005	Blue lilac	7012	Basalt gray
5000	Violet blue	7015	Slate gray
5001	Green blue	7023	Concrete gray
5003	Sapphire blue	7036	Platinum gray
5005	Signal blue	7037	Dusty gray
5011	Steel blue	7038	Agate gray
5013	Cobalt blue	7039	Quartz gray
5014	Pigeon blue	7040	Window gray
5020	Ocean blue	7042	Traffic gray A
5021	Water blue	7044	Silk gray
5022	Night blue	7045	Telegray 1
5023	Distant blue	7046	Telegray 2
6000	Patina green	7047	Telegray 4
6001	Emerald green	8012	Red brown
6002	Leaf green	8025	Pale brown
6005	Moss green	8028	Terra brown
6009	Fir green	9003	Signal white
6010	Grass green	9004	Signal black
6016	Turquoise green	9006	White aluminum
6017	May green	9007	Gray aluminum
6018	Yellow green	9010	Pure white
6024	Traffic green	9011	Graphite black
6026	Opal green	9016	Traffic white
6029	Mint green	9017	Traffic black
6032	Signal green		

The following weakly covering paints must be applied at least twice owing to their poor opacity. The standard paint finish for these colors is not possible and must be ordered with **S02**, **S03**, or **S04**.

RAL No.	Color name
1003	Signal yellow
1004	Golden yellow
1006	Maize yellow
1007	Daffodil yellow
1012	Lemon yellow
1014	Ivory
1018	Zinc yellow
1021	Rape yellow
1023	Traffic yellow
1028	Melon yellow
1032	Broom yellow
1033	Dahlia yellow
2008	Bright red orange
2009	Traffic orange
2010	Signal orange
3002	Carmine red
5024	Pastel blue
6027	Light green

Coating structure and colors not specified in the catalog are available on request.

© Siemens AG 2018

Overview

Connected in star for dispatch – Order code **M01**
The terminal board of the motor is connected in star for dispatch.

Connected in delta for dispatch – Order code **M02**
The terminal board of the motor is connected in delta for dispatch.

Packing weights

For motors		For land transport							
Frame size	Type	Type of construction IM B3				Types of construction IM B5, IM V1			
	1LE1...- **1LE5...-** **1PC1...-** **1MB1...-**	in box Tare	on ISPM wooden base board with telescopic box Tare	on pallet Tare	in crate Tare	in box Tare	on ISPM wooden base board with telescopic box Tare	on pallet Tare	in crate Tare
		kg	kg	kg	kg	kg	kg	kg	kg
63 M	**0B.2**	0.65	–	–	–	0.65	–	–	–
71 M	**0C.2**	0.65	–	–	–	0.65	–	–	–
80 M	**0D.2**	0.65	–	–	–	0.65	–	–	–
90 S	**0E.0**	0.65	–	–	–	0.65	–	–	–
100 L	**1A.4**	–	5.0	–	–	–	5.0	–	–
	1A.5	–	5.0	–	–	–	5.0	–	–
	1A.6	–	5.0	–	–	–	5.0	–	–
112 M	**1B.2**	–	5.0	–	–	–	5.0	–	–
	1B.6	–	5.0	–	–	–	5.0	–	–
132 S	**1C.0**	4.7	–	–	–	5.2	–	–	–
	1C.1	4.7	–	–	–	5.2	–	–	–
132 M	**1C.2**	4.7	–	–	–	5.2	–	–	–
	1C.3	4.7	–	–	–	5.2	–	–	–
	1C.6	8.7	–	–	–	9.2	–	–	–
160 M	**1D.2**	4.8	–	–	–	5.7	–	–	–
	1D.3	4.8	–	–	–	5.7	–	–	–
160 L	**1D.4**	4.8	–	–	–	5.7	–	–	–
	1D.6	8.8	–	–	–	9.7	–	–	–
180		–	–	8.0	–	–	–	10.0	–
200		–	–	11.0	–	–	–	13.0	–
225		–	–	14.0	–	–	–	17.0	–
250		–	–	22.0	–	–	–	25.0	–
280		–	–	24.0	–	–	–	27.0	–
315		–	–	28.0	–	–	–	32.0	–
315	**1LE5**	–	–	32.0	–	–	–	46.0	–
355	**1LE5**	–	–	58.0	–	–	–	78.0	–

Data apply for individual packaging. Wire-lattice pallets can be used, order code **B99**.

Safety notes

Printed German and English Operating Instructions (compact), enclosed in each wire-lattice pallet – Order code **B04**

Documentation

Printed German and English Operating Instructions enclosed with the motor are available as an option (standard documentation in PDF format can be obtained using the Drive Technology Configurator) – Order code **B04**

Test certificates

Acceptance test certificate 3.1 in accordance with **EN 10204** – Order code **B02**

An acceptance test certificate 3.1 in accordance with EN 10204 can be supplied for most motors.

Type test with temperature-rise run for horizontal motors
- **With acceptance** – Order code **B83**
- **Without acceptance** – Order code **B82**

During the type test, a temperature-rise test is performed; no-load, short-circuit, and load characteristics are recorded; the iron losses and friction losses are determined and the efficiency is calculated from the summed losses. This option is only applicable to motors with a horizontal type of construction. Acceptance testing is performed by an external representative (e.g. customer, classification society). No acceptance test is performed when order code **B82** is stated.

Extension of the liability for defects for SIMOTICS 1LE15 and 1MB15 Low-Voltage Motors

For SIMOTICS 1LE15 and 1MB15 Low-Voltage Motors, it is possible to obtain an extension of the liability for defects beyond the standard liability period.

The standard warranty period is quoted in the standard conditions of supply and delivery and is 12 months. The standard warranty period for SIMOTICS 1LE16 and 1MB16 Low-Voltage Motors is 36 months.

For the case of a new product order

With the following optional order suffixes listed in the table, extension of the liability for defects beyond the standard liability period is possible in conjunction with a new order for a product.

The markup on the product price is graded according to the duration of the extension.

Extension of the liability for defects for 1LE15 and 1MB15 motors	
Additional identification code **–Z** with order code	Description
Q80	Extension of liability for defects, by 12 months to a total of 24 months (2 years) from delivery
Q82	Extension of liability for defects, by 24 months to a total of 36 months (3 years) from delivery

© Siemens AG 2018

Overview

Applicable standards and specifications

The 1LE. motors comply with the IEC 60034 series of international product standards for rotating electrical machines and, in particular, those parts that are listed in the table below.

Title	IEC/EN	DIN EN
General specifications for rotating electrical machines	IEC 60034-1, IEC 60085	EN 60034-1
Specification of the losses and efficiency of rotating electrical machines	IEC 60034-2-1	EN 60034-2-1
General-purpose three-phase induction motors having standard dimensions and powers	IEC 60072 Mounting dimensions and power series only (no assignment of frame size to power)	EN 50347 Mounting dimensions according to IEC 60072 and power assignment for Europe
Starting performance of rotating electrical machines	IEC 60034-12	EN 60034-12
Terminal designations and direction of rotation for electrical machines	IEC 60034-8	EN 60034-8
Designation for types of construction, mounting, and terminal box position (IM code)	IEC 60034-7	EN 60034-7
Terminal box cable entries	–	DIN 42925
Built-in thermal protection	IEC 60034-11	EN 60034-11
Noise limits of rotating electrical machines	IEC 60034-9	EN 60034-9
IEC standard voltages	IEC 60038	IEC 60038
Methods of cooling of rotating electrical machines (IC code)	IEC 60034-6	EN 60034-6
Vibration severity of rotating electrical machines	IEC 60034-14	EN 60034-14
Vibration limits	–	ISO 10816
Degrees of protection for rotating electrical machines (IP code)	IEC 60034-5	EN 60034-5
International efficiency classes for rotating electrical machines (IE code)	IEC 60034-30-1	EN 60034-30
In addition, the following applies to Ex motors:		
General provisions	IEC/EN 60079-0	EN 60079-0
Type of protection "n" (non-sparking)	IEC/EN 60079-15	EN 60079-15
Areas containing flammable dust	IEC/EN 60079-31	EN 60079-31

The following applies to explosion-proof motors:

Since the requirements of explosion-proof motors comply with the European standards EN 60079-0, EN 60079-15, EN 60079-31 and Directive 2014/34/EU (ATEX 95), the certificates issued by authorized testing agencies (PTB, FTZU, etc.) are accepted by all member states of the EU. The remaining members of CENELEC, Switzerland in particular, also accept the certificates.

Tolerances for electrical data

According to EN 60034, the following tolerances are permitted: Motors that comply with EN 60034-1 must have a voltage tolerance of ±5 %/frequency tolerance of ±2 % (Design A). If this is fully utilized, the admissible limit temperature of the temperature class may be exceeded by 10 K.

Efficiency η at
$P_{rated} \leq 150$ kW: $-0.15 \cdot (1 - \eta)$
$P_{rated} > 150$ kW: $-0.1 \cdot (1 - \eta)$

Where η is a decimal number.

$$\text{Power factor} \quad -\frac{1-\cos\varphi}{6}$$

- Minimum absolute value: 0.02
- Maximum absolute value: 0.07

Slip ±20 % (for motors < 1 kW ±30 % is admissible)
Locked-rotor current +20 %
Locked-rotor torque –15 % to +25 %
Breakdown torque –10 %
Moment of inertia ±10 %

Certifications

Product certifications are differentiated in terms of safety-related certificates and efficiency certificates.

Since 2011, it has been obligatory for low-voltage motors with power ratings in the range of 0.75 to 375 kW (2, 4, and 6-pole) to be classified in accordance with the IEC 60034-30-1 efficiency standard and to be marked with the corresponding IE code (International Efficiency IE1, IE2, or IE3). The efficiency is determined using the summed losses method in accordance with IEC 60034-2-1.

© Siemens AG 2018

Overview (continued)

Energy-saving motors for the European Economic Area in accordance with EU Directive 640/2009

Since January 2017, all low-voltage motors that fall within the scope of the EU directive must fulfill the specifications of international efficiency class IE3.

- Line voltage ≤ 1000 V
- Line frequency 50 or 50/60 Hz
- Power range 0.75 to 375 kW
- Pole number 2, 4 and 6-pole
- Continuous duty S1

IE2 motors are only admissible if they are speed-controlled via converters.

Energy-saving motors for the North-American economic area in accordance with EISA

In accordance with EISA, modified conditions have been in effect since June 1, 2016.
This law stipulates that all motors must comply with the requirements stated in NEMA MG1 Table 12-12 (NPE = Nema Premium Efficient).
From this date onwards, therefore, motors previously covered by the EPAct must also comply with NPE. The NPE requirements apply to motors with the following characteristics / operating conditions:

- Line voltage ≤ 600 V
- Line frequency 60 Hz
- Power range 1 hp to 500 hp
- Number of poles: 2, 4, 6, 8-pole motors and geared motors
- Continuous duty S1

Explosion-proof motors are also included.

Exclusions from the EISA efficiency requirements:

- Brake motors
- Converter motors

Note:

Option **D30**: el. acc. to NEMA
Option **D31**: UL version

These options can be ordered for motors that are not subject to the EISA specifications (e.g. for use outside North America).

Options **D30** and **D31** do not authorize operation within North America.

NEMA Premium

The logo NEMA Premium is a registered trademark. It is only permitted to be used by companies that voluntarily submit to the control of the NEMA organization.

Approval for the USA: UL safety and DoE listing

For the USA, the motor series **1LE1.21** (NEE) and **1LE1.23** (NPE) are listed at the Department of Energy (DoE) and marked with the certification number **CC032A**.

Additional specifications to NEMA MG1: Nominal efficiency acc. to NEMA MG1 Table 12-11 or Table 12-12, design letter, code letter, CONT, CC No. CC 032A (Siemens) and service factor SF 1.15.

Motor series 1LE1.21 and 1LE1.23 remain certified up to a rated voltage of 600 V from Underwriters Laboratories Inc. and are marked accordingly ("Recognition Mark" = R/C).

CC032A

UL approval does not apply to motors for Zones 2, 21, 22 or marine motors.

Approval for Canada: CSA safety and CSA Energy Efficiency Verification

In April 2012, the EISA requirements were implemented in Canada; in this case, all powers are subject to certification without the restrictions applicable to the NEMA frame sizes. Motor series 1LE1.21 and 1LE1.23 are certified for Canada through the Canadian Standard Association (CSA), listed by the Office of Energy Efficiency (OEE) and marked with both the CSA safety logo and the CSA efficiency label. These motors comply with the efficiency requirements of the new CSA standard C390-10. The efficiency is determined in the same manner as with IEC 60034-2-1.

Externally or internally mounted components which are used are listed by CSA or are used by manufacturers in accordance with regulations. It may have to be decided whether the motor is suitable for the application. Approval does not apply to 1MB1 motors for Zones 2, 21, 22 or marine motors.

Approval for Mexico:

The EISA regulations are applicable for Mexico.

Korea certification – Order code **D33**

Minimum efficiencies required by law

According to a legislative amendment with reference to the MKE-2015-28 (Ministry of Knowledge Economy Korea) dated February 12, 2015, Minimum Efficiency IE3 shall become obligatory in Korea by the following dates:

- October 1, 2015 for motors ranging from 37 to 200 kW
- October 1, 2016 for motors ranging from 200 to 375 kW
- October 1, 2018 for motors ranging from 0.75 to 37 kW

For this reason, we shall be launching the SIMOTICS GP/SD APAC series (Asia/Pacific) with efficiency class IE3, which complies with the IE3 energy efficiency requirements for line frequencies 50 Hz and 60 Hz (P50) onto this market:

- SIMOTICS GP,
  2, 4, and 6-pole motors of the 1LE1043 motor series
- SIMOTICS SD,
  2, 4, and 6-pole motors of the 1LE1543 and 1LE1643 motor series

Scope of Korean standard KS C 60034-2-1

This Korean standard is applicable to three-phase asynchronous motors with the following parameters:

- Voltage: ≤ 600 V
- Power supply: 60 Hz three-phase
- Rated power: 0.75 ... 375 kW
- Number of poles: 2, 4, 6 and 8
- Speed: Constant
- Coolant temperature: ≤ 40 °C
- Mounting method: Foot or flange-mounted

© Siemens AG 2018

Overview (continued)

Korea Energy Label

Option **D33** KEMCO (Korea Energy Management Cooperation KEMCO) Korea Energy Efficiency Label can be ordered only for those motors which comply with Korean efficiency requirements. Confirmation that the motor efficiency and power factor comply with KS C 60034-2-1 is provided by certification.

The Korea Energy Label includes the following information:

- Full-load efficiency
- Motor Type (MT)
- Rated output power
- No. of poles
- CO_2 emissions per hour
- Energy costs per annum

Rating plate

KEMCO-certified motors with option code **D33** are fitted with a modified rating plate that indicates the admissible minimum energy efficiency value (P50 for 60 Hz) in accordance with the Korean Energy Efficiency Ordinance with reference to Korean Standard KS C 60034-2-1.

The energy efficiency values stipulated by KS C 60034 are identical to the international efficiency values IE (IEC 60034-30).

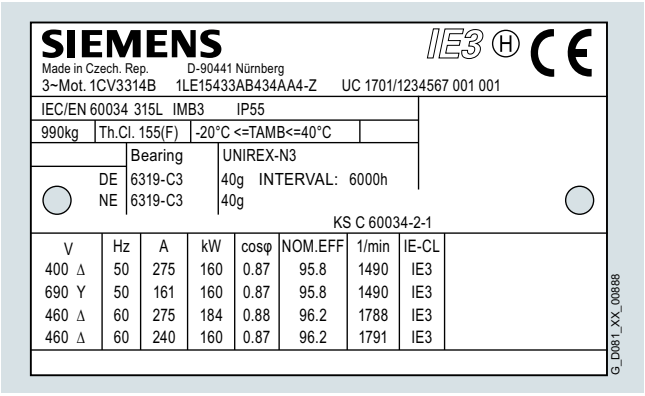

You will find a complete list of KEMCO-certified motors (APAC Line) on the selection tables in Chapter 2.

1PC3 motors: 1PC3 motors are also covered by certification provided that the electrical design complies with local requirements as stipulated in standard KS C 60034-2-1. Please contact QC for further clarification if required.

Motors from the APAC Line can be ordered with or without option **D33** depending on the final destination region.

Energy-saving motors for China: China Energy Label

In 2012, the directive for the China Energy Label was redefined. Applicability was extended to explosion-proof motors.

- Line voltage ≤ 1000 V
- Line frequency 50 Hz
- Power range 0.75 kW to 375 kW
- Number of poles: 2, 4, 6-pole
- Continuous duty S1

The minimum requirements for the efficiency classes previously defined in the Chinese standard GB 18613-2006 were classified in the new standard GB 18613-2012 (Minimum Allowable Values of Energy Efficiency and Energy Efficiency Grades for Small and Medium Three-Phase Asynchronous Motors) in accordance with International Efficiency IE2-4.

IEC IE class	GB 18613-2012
IE4	Grade 1
IE3	Grade 2
IE2	Grade 3
IE1	

The 1LE1 motor series for IE2 and IE3, plus order code **D34** were previously certified for China Energy Label 2012.

CCC safety certification is also required for motors with lower powers.

CCC – China Compulsory Certification – Order code **D01**

Motors with small powers (small power motors) that are exported to China must be certified up to a rated power of:

- 2-pole: ≤ 2.2 kW
- 4-pole: ≤ 1.1 kW
- 6-pole: ≤ 0.75 kW
- 8-pole: ≤ 0.55 kW

Notes:

Chinese customs checks the need for certification of imported products by means of the commodity code.

The following do not need to be certified:

- Explosion-proof motors
- Multi-voltage motors
- Multi-speed motors with powers higher than those listed above
- Repair parts

© Siemens AG 2018

Overview (continued)

VIK version
VIK = Verband der Industriellen Energie- und Kraftwirtschaft e.V. (German Association of the Energy and Power Supply Industry)

- **VIK standard version** – 1LE1 + order code **C02**
  "VIK" identification on rating plate.
  ➔ Product range in catalog section 2.
- **VIK-Ex ec version** – 1MB1.3 + order code **C02**
  "VIK" and "Ex ec IIC T3 Gc" marking on the rating plate according to Directive 94/9/EC (ATEX).
  ➔ Product range in catalog section 5.

Both versions include technology for Zone 2 to type of protection Ex ec IIC T3 Gc. Motors up to frame size 355 can be supplied in accordance with the technical requirements of the VIK recommendation.

Minimum efficiency class:

- VIK standard version:
  IE3 in accordance with legal specifications.
- VIK Ex ec version:
  At least IE3 in accordance with the final draft of the VIK recommendation dated February 2017.

Notes:
- 8-pole motors or all motors < 0.75 kW are still possible as these motors are outside the power range specified for IE stamping.
- Motors in VIK version with mounted technology (brake, rotary pulse encoder and separately driven fan) are not compatible with Zone 2.
  Versions for Zone 21/22 are not possible.

TR CU product safety certificate EAC for the Eurasian customs union (Russia, Belarus, Kazakhstan)
TR CU = Technical Regulation Customs Union
EAC = Eurasian Conformity

The TR CU product safety certificate is required in order to import motors into the Eurasian customs union area.

"TR CU product safety certificate EAC for Eurasian customs union" – order code **D47**

When motors are ordered with order code **D47**, the motor rating plate and packaging are marked with the logo "EAC".

The motor must have a "TR CU product safety certificate EAC", although the certificate does not generally have to be shipped with the motor. The customs authorities use the motor article number to check the motor certification.

The following are available in the SIOS (Siemens Industry Online Support) and the Drive Technology Configurator:

- TR CU product safety certificate in accordance with the Low-Voltage Directive
- Additional TR CU product certificate in accordance with the EMC Directive.

Train-compatible version

Train-compatible version IC418, EN IEC 60349, acc. to EN 45545, without external fan and without fan cover (1LE10 aluminum motors in frame sizes 80 to 200)

- Electrical design in accordance with EN IEC 60349; $U_{rated} \leq 500$ V AC.
- DC-link voltage: $U_{dc} \leq 700$ V; $du/dt \leq 5$ kV/µs
- Vibration resistance to Class 3M4 according to IEC 60721-3-3
- Metal cable gland
- Including external grounding depending on construction type (corresponds to order code **H04**).
- Standard paint finish certified according to EN 45545 (polyurethane-based paint without test certificate – corresponds to order code **S06**)

Train-compatible version IC411, EN IEC 60349, with EN 45545, with external fan and fan cover in metal – order code **L91** for cooling method IC411

- 1LE10 aluminum motors in frame sizes 80 to 200
- Electrical design in accordance with EN IEC 60349; $U_{rated} \leq 500$ V AC
- DC-link voltage: $U_{dc} \leq 700$ V; $du/dt \leq 5$ kV/µs
- Vibration resistance to Class 3M4 according to IEC 60721-3-3
- Metal cable gland
- Including external grounding depending on construction type (corresponds to order code **H04**)
- Standard paint finish certified according to EN 45545 (polyurethane-based paint without test certificate – corresponds to order code **S06**)
- Incl. metal fan cover

Train-compatible version IC411, EN IEC 60349, without EN 45545, with external fan and fan cover in plastic – Order code **L90** for cooling method IC411

- 1LE10 aluminum motors in frame sizes 80 to 200
- Electrical design in accordance with EN IEC 60349; $U_{rated} \leq 500$ V AC
- DC-link voltage: $U_{dc} \leq 700$ V; $du/dt \leq 5$ kV/µs
- Vibration resistance to Class 3M4 according to IEC 60721-3-3
- Metal cable gland
- Including external grounding depending on construction type (corresponds to order code **H04**)
- Standard paint finish, without EN 45545 (polyurethane-based paint without test certificate – corresponds to order code **S06**)
- Incl. plastic fan cover

Recommended supplementary options:
- Located bearing DE (order code **L20**)
- Temperature class 155 (F), utilized according to 130 (B), coolant temperature 55 °C, derating approx. 13 % (order code **N07**)
- Coolant temperature –30 to +40 °C (order code **D04**)
- Coolant temperature –40 to +40 °C (order code **D03**)

© Siemens AG 2018

Overview

Voltages, currents and frequencies

Standard voltages

EN 60034-1 differentiates between Category A (combination of voltage deviation ±5 % and frequency deviation ±2 %) and Category B (combination of voltage deviation ±10 % and frequency deviation +3/–5 %) for voltage and frequency fluctuations. The motors can supply their rated torque in both Category A and Category B. In Category A, the temperature rise is approx. 10 K higher than during rated operation.

Standard	Category	Category
IEC 60034-1	A	B
Voltage deviation Frequency deviation	±5 % ±2 %	±10 % +3 %/–5 %
Rating plate data stamped with rated voltage a (e.g. 230 V)	a ±5 % (e.g. 230 V ±5 %)	a ±10 % (e.g. 230 ±10 %)
Rating plate data stamped with rated voltage ranges b to c (e.g. 220 to 240 V)	b –5 % to c +5 % (e.g. 220 –5 % to 240 +5 %)	b –10 % to c +10 % (e.g. 220 –10 % to 240 +10 %)

For further details, see EN 60034-1.

In Category B, the standard does not recommend extended operation, so it is not permissible for explosion-proof motors. See "Rating plates and additional rating plates" for details of the rating plate inscriptions and corresponding examples. The selection and ordering data give the rated current at 460 V, 60 Hz. The IEC 60038 standard specifies a tolerance of ±10% for line voltages of 230 V, 400 V, and 690 V.

Line voltages	Voltage code
1LE1 motors	
230 VΔ/400 VY, 50 Hz 460 VY, 60 Hz	22
400 VΔ/690 VY, 50 Hz 460 VΔ, 60 Hz	34
500 VY, 50 Hz 575 VY, 60 Hz	27
500 VΔ, 50 Hz 575 VΔ, 60 Hz	40

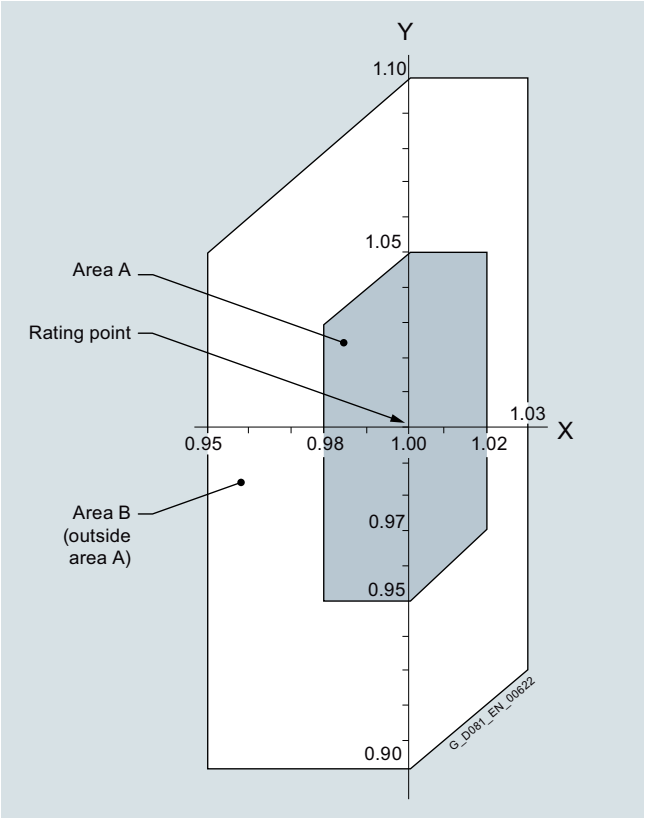

Y-axis: Voltage tolerance
X-axis: Frequency tolerance

Non-standard voltages and/or frequencies

The tolerance laid down by EN 60034-1 applies to all non-standard voltages.
For some non-standard voltages at 50 or 60 Hz, order codes are specified. They are ordered by specifying the code digit **9** for voltage in the 12th position of the Article No. as well as the code digit **0** in the 13th position of the Article No. and the corresponding order code.

M1Y Non-standard rated voltage between 200 V and 690 V (voltages outside this range are available on request), frequency, circuit, for 60 Hz additionally required rated power in kW.

Motor series	Frame size	Rated voltages that can be supplied for M1Y Lowest/highest voltage for	
		Delta	Star
1LE1, 1MB1	63 … 315	200/690 V	250/690 V

Order codes for other rated voltages are listed under "Order suffixes" in the "Selection and ordering data" as well as "Special versions" under "Voltages".

Line voltages according to NEMA

Assignment of rated voltage of the motor to that of the line

Line voltage	Motor voltage
208 V	200 V
240 V	230 V
480 V	460 V
600 V	575 V

Powers

The powers or rated powers are listed in the selection tables for both 50 Hz and 60 Hz. For 60 Hz, the rated power values must, in some cases, be increased, e.g. for pole-changing motors.

Assignment of standard powers kW-hp and vice versa, in accordance with IEC

kW · 1.341 = hp
hp · 0.746 = kW

P_{rated} kW	P_{rated} hp	P_{rated} kW	P_{rated} hp	P_{rated} kW	P_{rated} hp	P_{rated} kW	P_{rated} hp	P_{rated} kW	P_{rated} hp	P_{rated} kW	P_{rated} hp
0.06	0.08	0.37	0.5	2.2	3	11	15	37	50	110	150
0.09	0.12	0.55	0.75	3	3.7	15	20	45	60	132	200
0.12	0.16	0.75	1	4	5	18.5	25	55	75	160	250
0.18	0.25	1.1	1.5	5.5	7.5	22	30	75	100	200	300
0.25	0.33	1.5	2	7.5	10	30	40	90	125		

© Siemens AG 2018

Overview

In accordance with EN 60034-1, the approximate total weight is specified on the rating plate for all motors.

Supplementary data (maximum of 20 characters) can be indicated on the rating plate or additional rating plate and on the packaging label,
order code **Y84.**

An adhesive label can also be supplied loose,
order code **Y85.**

An additional rating plate for customer specifications is also possible, additional text: 9 lines of 40 characters each,
order code **Y82.**

An additional rating plate with deviating rating plate data can also be ordered (only for ratings such as voltage, power, speed),
order code **Y80.**

An "additional rating plate for voltage tolerance" can also be ordered.
Can be ordered for 230 VΔ/400 VY or 400 VΔ/690 VY (voltage code "22" or "34"). Not possible for pole-changing motors, naturally cooled 1PC1 motors, 8-pole motors and in combination with order code D34.
Order code **B07**
(voltage range plate is always provided in the form of an adhesive label)

The number of rating plates and/or the material quality of the rating plate including additional rating plates can be ordered using order codes Y82, Y84 and Y80. Does not apply to order code B07, rotational direction arrows, PTC thermistor plates, other notices.

- Additional (rating) plate(s)
  Order code **M10.**
- Plate(s) with resistance to scratches, heat, cold and acid
  Order code **M11.**

In the standard version, the rating plate is available in international format or in the German/English language. The language for the rating plate can be ordered by specifying in plain text. An overview of the languages that can be ordered is provided by the table below.

Overview of languages on the rating plate

Motor type	Frame size	Rating plate	
		German (de)	English (en)
1LE10	63 … 200	□	○
1LE15/6	71 … 315	□	○
1LE5	315 ... 355	□	○
1MB1	80 … 315	□	○
1PC1	100 … 315	□	○

□ Standard version
○ Without additional charge

Other languages on request

Examples of rating plates

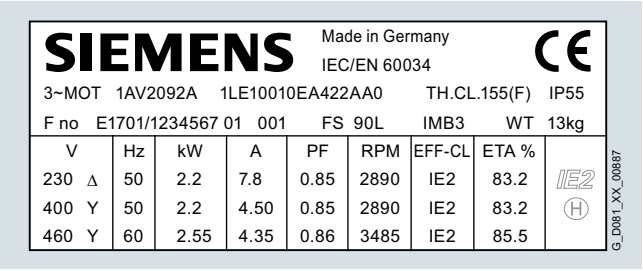

Adhesive rating plate up to frame size 90

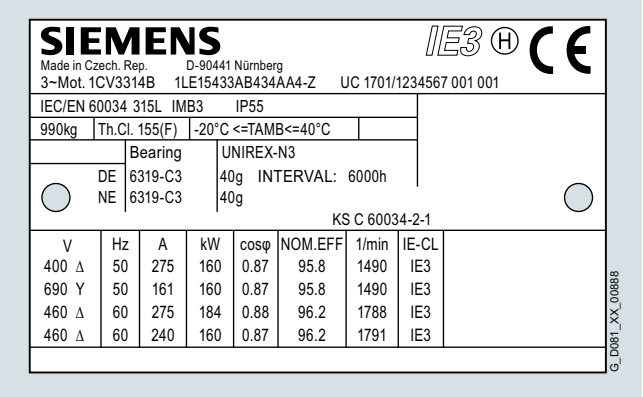

Rating plate for motor with KEMCO certification

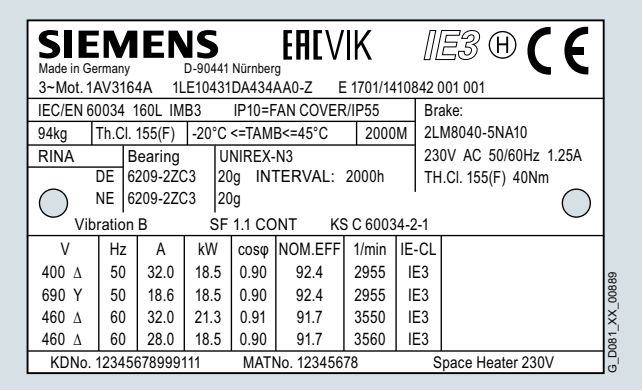

Standard rating plate (metal) for IEC motors – maximum characteristics

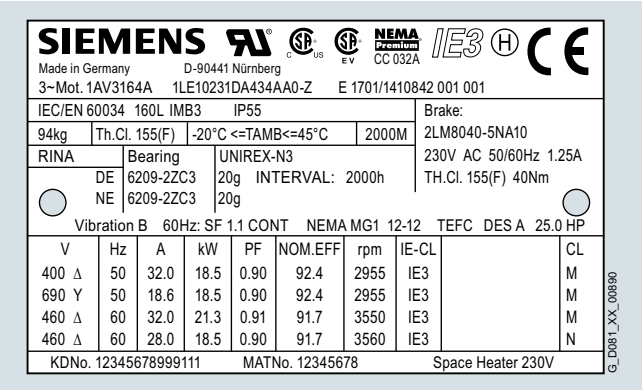

Standard rating plate (metal) for NEMA motors – maximum characteristics

© Siemens AG 2018

Overview (continued)

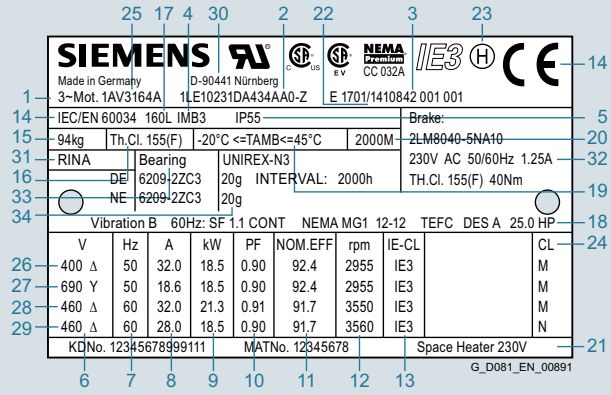

1 Machine type: Three-phase low-voltage motor
2 Article No.
3 Factory serial number (Ident.-no., serial number)
4 Type of construction
5 Degree of protection
6 Rated voltage [V] and winding connections
7 Frequency [Hz]
8 Rated current [A]
9 Rated power [kW]
10 Power factor (cos φ)
11 Efficiency
12 Rated speed [rpm]
13 IE efficiency class
14 Standards and specifications
15 Weight of machine [kg]
16 Temperature class
17 Frame size
18 Supplementary data (optional)
19 Operating temperature range (only if it deviates from standard)
20 Installation altitude (only when higher than 1000 m)
21 Customer data (optional)
22 Date of manufacture YYMM
23 Half-key balancing
24 Code letter "CL"
25 Motor type number (MT)
26 IEC standard series, power 50 Hz (P50/50 Hz) 400 Δ
27 IEC standard series, power 50 Hz (P50/50 Hz) 690 Δ
28 Equivalent power 60 Hz at the same utilization as IEC standard series 50 Hz
29 IEC standard series power 60 Hz (P50/60 Hz)
30 Manufacturer's address
31 Marine certificates
32 Optional information
33 Bearing size
34 Relubrication data optional

Explanation of the standard rating plate

Efficiency, power factor, rated speed, direction of rotation, rated torque

Overview

Efficiency and power factor

The efficiency η for 4/4, 3/4 and 1/2 load and the power factor cos φ for each rated power are listed in the selection tables in the individual sections of this catalog.
See page 1/5 for minimum efficiencies.

Rated speed and direction of rotation

The rated speeds are applicable for the rated data. The synchronous speed changes proportionally with the line frequency. The motors are suitable for clockwise and counterclockwise rotation.

When U1, V1, W1 are connected to L1, L2, L3 the motor rotates clockwise when viewing the drive shaft extension. Counterclockwise rotation is achieved by swapping two phases (see also "Heating and ventilation" on page 1/36).

Rated torque

The rated torque in Nm delivered at the motor shaft is

$$T = \frac{9.55 \cdot P \cdot 1000}{n}$$

P Rated power in kW
n Speed in rpm

Note:
If the voltage deviates from its rated value within the admissible limits, the locked-rotor torque, the pull-up torque and the breakdown torque vary with the approximate square of the value, but the locked-rotor current varies approximately linearly.

In the case of squirrel-cage motors, the locked-rotor torque and breakdown torque are listed in the selection tables as multiples of the rated torque.
Preferred practice is to start squirrel-cage motors directly on line. The torque class indicates that with direct-on-line starting, even if there is an undervoltage of -5 %, it is possible to start up the motor against a load torque of

- 160 % for CL 16
- 130 % for CL 13
- 100 % for CL 10
- 70 % for CL 7
- 50 % for CL 5

of the rated torque.

© Siemens AG 2018

Overview

All motors in the SIMOTICS generation are equipped with innovative insulation systems, consisting of high-quality enamel wires and insulating sheet materials in conjunction with highly temperature-resistant impregnations.

The motors can be operated with SINAMICS G and SINAMICS S converters (controlled and uncontrolled infeed) while adhering to the admissible voltage peaks in accordance with the adjacent table.

Continuous operation while fully utilizing the admissible voltage tolerances must be avoided and is not recommended in accordance with IEC 60034-1 2011 Chapter 7.3.

The preferred supply system configurations are TT systems and TN systems with neutral-point grounding. We do not recommend operation in TN systems because of the higher voltage load.

Operation on non-grounded IT systems is also possible. However, in a ground fault, the insulation is excessively stressed. In the case of a ground fault, the process should be terminated as quickly as possible (t < 2 h), and the fault resolved.

For motors with protruding connection cables (order codes **R20, R21, R22, R23**, and **R24**), please inquire in the case of converter operation.

Impulse Voltage Insulation Class (IVIC) – category C (strong)

The insulation system of SIMOTICS motors significantly exceeds the requirements of stress category C (IVIC C = high stress). If voltage peaks higher than those specified according to IVIC C can occur, observe the data in the following table.

- For a line voltage (converter input voltage) up to max. 500 V and operation connected to a SINAMICS G/SINAMICS S converter with uncontrolled infeed (BLM, SLM), the relevant guidelines for the motor and converter configuration must be observed.
- For a line voltage (converter input voltage) up to max. 480 V and operation connected to a SINAMICS S converter with controlled infeed (ALM), the relevant guidelines for the motor and converter configuration must be observed.
- For line voltages (converter input voltages) higher than those stated above (max. 690 V), motors that are ordered for converter operation must have a suitable insulation system.
- For operation of a converter of another manufacturer, the permissible voltage peaks according to IEC 60034-18-41 in accordance with stress category C (see table below) must be observed, depending on the particular line voltage (converter input voltage) and the motor insulation system.

		Line voltage U_{rated}					
		400 V		480 V		500 V	
Standard		IVIC C	Siemens	IVIC C	Siemens	IVIC C	Siemens
U_{phase} $U_{phase\text{-}to\text{-}ground}$	$V_{pk/pk}$	1680	2200	2016	2200	2100	2200
$\hat{U}_{phase\text{-}to\text{-}ground}$	V_{pk}	840	1100	1008	1100	1050	1100
U_{phase} $U_{phase\text{-}to\text{-}phase}$	$V_{pk/pk}$	2360	3000	2832	3000	2950	3000
$\hat{U}_{phase\text{-}to\text{-}phase}$	V_{pk}	1180	1500	1416	1500	1475	1500

The following applies for the voltage rise time: T_a > 0.3 µs.

The voltages according to EN 60034-18-41/IVIC CC are specified as peak-to-peak values ($V_{pk/pk}$). For information, the conventional peak values (V_{pk}) are also stated.

Insulation systems for converter operation > 480 V/500 V

The SIMOTICS motors can be operated in their standard version on SINAMICS converters without an additional filter up to a maximum converter input voltage of 500 V 3 AC on uncontrolled infeeds (SINAMICS G/S/V, BLM/SLM) and up to 480 V 3 AC on controlled infeeds (SINAMICS S, ALM). The specific configuration guidelines for motors and converters must be observed.

For higher converter input voltages, > 480 V/500 V 3 AC, a special insulation system of the motor (PREMIUM) is required. This is available for converter motors, such as SIMOTICS GP/SD VSD10, SIMOTICS DP crane motors, SIMOTICS FD, and the converter-capable SIMOTICS SD Pro motors.

For IE3 standard motors as of frame size 225, the PREMIUM insulation system can be obtained on request.

Bearing insulation/shaft grounding brushes

To avoid damage to bearings due to bearing currents, we recommend bearing insulation at the non-drive end (NDE) for frame size 225 and larger (order code **L51**).

For frame size 315 and larger, bearing insulation at the non-drive end (NDE) is always provided (order code **L51**).

When rotary encoders are used, it must be ensured that these do not bypass the bearing insulation. The rotary encoders in this catalog meet this requirement except for type 1XP8.

In most cases, NDE bearing insulation provides sufficient protection against damage to bearings due to bearing currents.

In rare cases, depending on the application and system, it may be necessary to take further measures on the converter or motor. On the motor side, bearing insulation is provided on the drive end (DE) (order code **L50** on frame size 225 and larger) and shaft grounding brushes (order code **L52** as of frame size 280).

When NDE bearing insulation is used together with DE bearing insulation, the option "shaft grounding brush" must additionally be selected to keep the shaft at a defined potential. In this constellation, to avoid damage to the bearings of the driven machine due to bearing currents, it is also necessary to insulate the coupling between the motor and the driven machine.

The EMC guidelines must always be complied with when the drive system is installed.

Thermal utilization of the motor

When motors are operated on a converter, additional losses occur due to the harmonics in the motor currents, which, depending on the permissible winding temperature, can make it necessary to reduce the torque. For operation on SINAMICS converters, the permissible torque values can be obtained from the SIZER engineering tool.

For operation on SINAMICS converters with the power ratings specified in the catalog, the motors are used according to temperature class 155 (F), i.e. in this case neither a service factor > 1 nor an increased coolant temperature is possible (order codes **N01**, **N02** and **N03** cannot be ordered).

Explosion-proof motors

For converter operation of Ex motors, special measures must be considered, see Chapter 5.

© Siemens AG 2018

Overview

DURIGNIT IR 2000 insulation system

The DURIGNIT IR 2000 insulation system consists of high-quality enamel wires and insulating sheet materials in conjunction with temperature-resistant resin impregnation.
This ensures that these motors will have a high mechanical and electrical strength, high service value, and a long lifetime. The insulation system protects the winding to a large degree against aggressive gases, vapors, dust, oil and increased air humidity. It can withstand the usual vibration stressing. The insulation is suitable up to an absolute air humidity of 30 g water per m^3 of air. Moisture condensation should be prevented from forming on the winding. For higher values, the **N30** and **N31** options are available – see page 1/34.

Please inquire about extreme applications.

Restarting against residual field and opposite phase

All motors can be restarted against 100 % residual field after a line voltage failure.

Winding and insulation version with regard to temperature class

All motors are designed for temperature class 155 (F).
At rated power with line operation, the motors can be used in temperature class 130 (B).

Temperature class 155 (F), utilized according to 155 (F), with service factor (SF)

According to the selection table, at rated power and rated voltage, all 1LE1/1PC1 motors in line operation have a service factor of 1.15. An exception to this are IE1 motors, which have a service factor of 1.1.
Order code **N01**

Temperature class 155 (F), utilized according to 155 (F), for higher power

When utilized according to temperature class 155 (F), the rated power specified in the selection and ordering data can be increased by 15 %. Exception for IE1 motors – can be increased by 10 %.
Order code **N02**

Temperature class 155 (F), utilized acc. to 155 (F), with increased coolant temperature

With power as defined in the catalog and line operation, coolant temperature is permitted to rise to 55 °C.
Order code **N03**

The service factor (SF) is not indicated on the rating plate for order codes **N02** and **N03**.
For converter operation at the power specified in the catalog, the motors are utilized according to temperature class 155 (F).
Order codes **N01**, **N02**, and **N03** are not possible.

Temperature class 155 (F), utilized acc. to 130 (B), coolant temperature 45 °C, derating approx. 4 %

Motor series 1LE1 and 1MB1 can be ordered according to temperature class 155 (F) for utilization according to temperature class 130 (B) and a maximum coolant temperature of 45 °C with derating of 4 %.
Order code **N05**

Temperature class 155 (F), utilized acc. to 130 (B), coolant temperature 50 °C, derating approx. 8 %

Motor series 1LE1 and 1MB1 can be ordered according to temperature class 155 (F) for utilization according to temperature class 130 (B) and a maximum coolant temperature of 50 °C with derating of 8 %.
Order code **N06**

Temperature class 155 (F), utilized acc. to 130 (B), coolant temperature 55 °C, derating approx. 13 %

Motor series 1LE1 and 1MB1 can be ordered according to temperature class 155 (F) for utilization according to temperature class 130 (B) and a maximum coolant temperature of 55 °C with derating of 13 %.
Order code **N07**

Temperature class 155 (F), utilized acc. to 130 (B), coolant temperature 60 °C, derating approx. 18 %

Motor series 1LE1 and 1MB1 can be ordered according to temperature class 155 (F) for utilization according to temperature class 130 (B) and a maximum coolant temperature of 60 °C with derating of 18 %.
Order code **N08**

Temperature class 180 (H)

With motor series 1LE1, and 1PC1, utilization according to temperature class 180 (H) is permitted.
Order code **N10**

Temperature class 180 (H) at rated power and max. CT 60 °C

With motor series 1LE1, and 1PC1, utilization according to temperature class 180 (H) is permitted at rated power and a maximum coolant temperature of 60 °C.
Order code **N11** (not possible for 1LE15 and 1LE16 motors with increased power).

The grease lifetime specified is valid for a coolant temperature of 40 °C. If the coolant temperature is increased by 10 K, the grease lifetime and regreasing interval are halved.

Temperature class 155 (F), utilized acc. to 130 (B), with higher coolant temperature and/or installation altitude

The motors can be ordered according to temperature class 155 (F) for utilization according to temperature class 130 (B) with other customized requirements if they are specified in plain text in the order.
Order code **Y50**

Temperature class 155 (F), utilized according to 155 (F), other requirements

The motors can be ordered according to temperature class 155 (F) for utilization according to temperature class 155 (F) with other customized requirements if they are specified in plain text in the order.
Order code **Y52**

Temperature class 180 (H), utilized according to 155 (F)

The motors can be ordered according to temperature class 180 (H) for utilization according to temperature class 155 (F) with other customized requirements if they are specified in plain text in the order.
Order code **Y75**

© Siemens AG 2018

Overview (continued)

Increased air humidity/temperature with 30 to 60 g water per m^3 of air

With motor series 1LE1, 1MB1 and 1PC1, motors are available in a version designed for increased air humidity in the range of 30 to 60 g water per m^3 of air, depending on the temperature, as shown in the table below. This version has condensation drainage holes (sealed).
Order code **N30** (includes order code **H03**, **M11**, stainless bolts in the terminal box cover, and **S02** standard/special paint finish for Performance Line cast-iron motors).
You must contact us if order code **N30** is to be combined with mountings (e.g. rotary pulse encoders or brakes).

Increased air humidity/temperature with over 60 to 100 g water per m^3 air

With motor series 1LE1, 1MB1 and 1PC1, motors are available in a version designed for increased air humidity of over 60 to 100 g water per m^3 of air, depending on the temperature, as shown in the table below. This version has condensation drainage holes.
Order code **N31** (includes order code **H03**, **M11**, stainless bolts in the terminal box cover, and either the **S02** special paint finish or the **S03** "sea air resistant" special paint finish for Performance Line cast-iron motors).
Please inquire before combining order code **N31** with mountings (e.g. rotary pulse encoder, brakes)!

Absolute/relative conversion of air humidity

Relative humidity	Temperature							
	up to 20 °C	up to 30 °C	up to 40 °C	up to 50 °C	up to 60 °C	up to 70 °C	up to 80 °C	up to 90 °C
10 %	2	3	5	8	13	20	29	42
15 %	3	5	8	12	19	30	44	63
20 %	3	6	10	17	26	39	58	84
25 %	4	8	13	21	32	49	73	105
30 %	5	9	15	25	39	59	87	126
35 %	6	11	18	29	45	69	102	146
40 %	7	12	20	33	52	79	116	167
45 %	8	14	23	37	58	89	131	188
50 %	9	15	26	41	65	98	145	209
55 %	10	17	28	46	71	108	160	230
60 %	10	19	31	50	78	118	174	251
65 %	11	20	33	54	84	128	189	272
70 %	12	21	36	58	91	138	203	293
75 %	13	23	38	62	97	148	218	314
80 %	14	24	41	66	104	157	233	335
85 %	15	26	43	70	110	167	247	356
90 %	16	27	46	74	117	177	262	377
95 %	16	29	49	79	123	187	276	398
100 %	17	30	51	83	130	197	291	419

The values in the table with a blue background are covered by the standard version (up to < 30 g water per m^3 of air).
The values in the table with a light gray background are covered by order code **N30** (30 to < 60 g of water per m^3 of air).
The values in the table with a dark gray background are covered by order code **N31** (60 to < 100 g of water per m^3 of air).

Please get in contact regarding requirements exceeding 100 g water per m^3 of air.

Note:

- The coolant temperature and installation altitude can be found from page 1/35 onwards!
- The metal fan cover is available in combination with order code **F74** (not standard). Metal fan cover is always standard for cast-iron Performance Line motors (1LE16).
- In case of increased thermal stress, please combine with the order codes **N05** to **N08**.
- In conjunction with more stringent requirements for the paint finish or corrosion protection stress (offshore, sea air, etc.), the corresponding order codes **S02**, **S03**, **S04**, and potentially **H07**, must be combined.
- Order code **N31** requires additional specifications for the ambient temperature CT 50 °C to CT 90 °C.

© Siemens AG 2018

Overview

The specified rated power is applicable for continuous duty in accordance with IEC 60034-1 at the frequency of 50 Hz, a coolant temperature (CT) or ambient temperature of 40 °C and an installation altitude (IA) up to 1000 m above sea level. 1LE1, 1MB1 and 1PC1 motors for ambient temperatures exceeding 40 °C are equipped with various types of seal. Mountings such as brake, terminal box at NDE, type of construction IM V1, type of construction IM V3 can sometimes exceed utilization in accordance with temperature class 130 (B).

For higher coolant temperatures and/or installation altitudes greater than 1000 m above sea level, the specified motor power must be reduced using the factor k_{HT}.

Depending on the frame size of the motor or the number of poles, special windings may be added to the motors for the different operating conditions.

This results in an admissible motor power of:

$P_{adm} = P_{rated} \cdot k_{HT}$

If the admissible motor power is no longer adequate for the drive, it should be checked whether the motor with the next higher rated power fulfills the requirements.

Abbreviation	Description	Unit
P_{adm}	Admissible motor power	kW
P_{rated}	Rated power	kW
k_{HT}	Factor for abnormal coolant temperature and/or installation altitude	

The motors are designed for temperature class 155 (F) and utilized in temperature class 130 (B). Under non-standard operating conditions, if they are to be used in this class, the admissible power rating must be determined from the table below.

Reduction factor k_{HT} for different installation altitudes and/or coolant temperatures

Installation altitude **above sea level**	Coolant temperature					
m	< 30 °C	30 … 40 °C	45 °C	50 °C	55 °C	60 °C
1000	1.07	1.00	0.96	0.92	0.87	0.82
1500	1.04	0.97	0.93	0.89	0.84	0.79
2000	1.00	0.94	0.90	0.86	0.82	0.77
2500	0.96	0.90	0.86	0.83	0.78	0.74
3000	0.92	0.86	0.82	0.79	0.75	0.70
3500	0.88	0.82	0.79	0.75	0.71	0.67
4000	0.82	0.77	0.74	0.71	0.67	0.63

Coolant temperature and installation altitude are rounded to 5 °C and 500 m respectively.

For details of derating for utilization in temperature class 155 (F), see "DURIGNIT IR 2000 insulation system".

Motors for coolant temperatures other than 40 °C or installation altitudes higher than 1000 m above sea level for utilization in temperature class 130 (B) must always be ordered with the additional identification code "–Z" and plain text. In the case of extreme derating, the operating data for the motors, i.e. efficiency and power factor, will also be less favorable due to partial utilization.

The following special versions are possible for 1LE1 and 1PC1 motors:

- Motors for coolant temperatures from –40 to +40 °C order code **D03**
- Motors for coolant temperatures from –30 to +40 °C order code **D04**

When ordering with order codes **D03** or **D04** in combination with mountings, the respective technical specifications have to be observed and it is necessary to inquire.

For details of order codes for use in temperature class 155 (F), see "DURIGNIT IR 2000 insulation system" under "Windings and insulation" on page 1/33.

Ambient temperature:
All motors can be used in the standard version at ambient temperatures between –20 and +40 °C. Exposure to direct sunlight can result in uncontrollable rises in motor temperature. To prevent this, appropriate shading measures such as a sun protective cover are recommended.
Motors can be utilized in temperature class 155 (F)

- at 40 °C with service factor 1.1, i.e. the motor can be continuously overloaded with 10 % of the rated power in the case of IE1 motors
- at 40 °C with service factor 1.15, i.e. the motor can be continuously overloaded with 15 % of the rated power in the case of IE2 motors and higher efficiency classes
- above 40 °C at rated power.

When motors are used in temperature class 130 (B) for higher ambient temperatures and/or installation altitudes, derating occurs in accordance with the Table "Reduction factor k_{HT} for different installation altitudes and/or coolant temperatures".
For motors ex stock, the service factor is indicated on the rating plate.
For other temperatures, special measures are necessary.
When brakes are to be mounted on motors intended for operation at temperatures below freezing, please inquire.

© Siemens AG 2018

Overview

Anti-condensation heating

Supply voltage 230 V (1AC)
Order code **Q02**

Supply voltage 115 V (1AC)
Order code **Q03**

For motors with windings at risk of condensation due to the climatic conditions, e.g. inactive motors in humid atmospheres or motors that are subjected to widely fluctuating temperatures, anti-condensation heaters must be used.
An additional cable entry is provided for the connecting cable in the terminal box.

Motor series	Frame size	Cable entry
Aluminum motors (GP)	≤ 200	1 × M16 × 1.5
Cast-iron motors (SD)	≤ 180	1 × M16 × 1.5
	200	1 × M20 × 1.5
	225 ... 315	2 × M20 × 1.5
	355	2 × M20 × 1.5

Anti-condensation heating must not be switched on during operation.

Frame size	Heat power of the anti-condensation heating	
	Supply voltage at	
	230 V	115 V (110 V)
	Order code **Q02**	Order code **Q03**
	W	W
1LE1/1LE5/1PC1 motors		
63 … 80	12.5	12.5
90 … 112	25	25
132 … 200	50	50
225 … 250	92	92
280 … 315	109	109
315 … 355	218	218
1MB1 motors		
80 … 112	7	7
132 … 160	12	12
180 … 200	57	57
225 … 250	92	92
280 … 315	109	109

Instead of an anti-condensation heater, another possibility is to connect a voltage that is approximately 4 to 10 % of the rated motor voltage to stator terminals U1 and V1; 20 to 30 % of rated motor current is sufficient to heat the motor.

Fans/separately driven fans

1LE1 and 1MB1 motors of frame size 71 to 315 have radial-flow fans in the standard version (with the exception of 1LE1, 1MB1 with option **F90** – version "Forced-air cooled motors without external fan and fan cover") that cool regardless of the direction of rotation of the motor (cooling method IC411 acc. to EN 60034-6). The air flow is forced from the non-drive-end (NDE) to the drive end (DE).
For details of separately driven fans for frame size 100 to 315, see also "Separately driven fans" on page 1/80.

Supply voltage of separately driven fan for 1LE1 motors:
The supply voltage tolerance of the separately driven fan is ±5 %. For voltage ranges, see page 1/80.

In confined spaces, it must be ensured that the minimum spacing is maintained between the fan cover and the wall. This also applies to adjacent parts, such as large handwheels and flywheels on the second shaft extension.

Clearance from wall/fan grilles	
Frame size	mm
63, 71	15
80, 90, 100	20
112	25
132	30
160	40
180, 200	90
225, 250	100
280, 315	110
355	140

For version of the fan and the fan cover, see the table below.

Motor series	Frame size	Fan material	Fan cover material
1LE10	63 ... 71	Plastic	Metal
	80 … 200	Plastic	Plastic [1]
1LE15	71 … 90	Plastic	Metal
	100 … 315	Plastic	Plastic
1LE16	100 … 315	Plastic	Metal
1LE55	315	Metal	Plastic
1LE56	315 … 355	Metal	Metal
1MB1.3	71 … 90	Metal	Metal
1MB1.3	100 … 315	Plastic	Metal
1MB1.1, 1MB1.2	71 … 315	Metal	Metal

Metal external fan impeller

The standard fan impeller made of plastic can be replaced with a fan impeller made of metal. This version is available for motor series 1LE1 (with the exception of 1LE1 with option **F90** – version "Forced-air cooled motors without external fan and fan cover").
A metal external fan is already included for the low-noise version.
Up to frame size 160, the metal external fan impeller is manufactured from aluminum.
Order code **F76**

Fan cover for textile industry

For 1LE1 motors (with the exception of 1LE1 with option **F90** – version "Forced-air cooled motors without external fan and fan cover") the standard version of the fan cover cannot be used in the textile industry.
For the motor series 1LE1 (with the exception of 1LE1 with option **F90** – version "Forced-air cooled motors without external fan and fan cover") a special version of the fan cover is available for the textile industry. This has a protective cover and is made of non-corrosive sheet steel.

The motor length increases when the fan cover for the textile industry is mounted, see page 1/111 Fig. 12
Order code **F75**

Sheet metal fan cover

In place of the plastic fan cover, a sheet metal fan cover can be ordered for motor series 1LE1 (with the exception of 1LE1 with option **F90** – version "Forced-air cooled motors without external fan and fan cover").
Order code **F74**

The sheet metal fan cover is supplied as standard with 1LE16 motors (Performance Line).

[1] For the frame size codes **A**, **D**, **F**, **H**, **J**, **K**, **L**, **N**, **T**, **U**, and **V**, a screwed-on cover (plastic or metal) is used in conjunction with the option **H03** (condensation drainage holes). Mounted separately driven fans or brakes are only available in sheet metal version.

© Siemens AG 2018

Overview (continued)

Necessary minimum cooling air flow for forced-air cooled motors in standard duty

The cooling air flow specified in the selection table applies to continuous duty according to EN 60034-1 at a coolant temperature (CT) or ambient temperature of 40 °C respectively and an installation altitude (IA) up to 1000 m above sea level.

In the 1LE1/1LE5 motor version without external fan and fan cover, order code **F90**, the motor is located in the air flow of the driven fan that must drive the minimum cooling air flow over the motor housing. The minimum air flow must pass closely over the housing (comparable to self-ventilation of the motor). Otherwise higher air flows are required to comply with admissible motor heating levels.

1LE1 motors

Frame size	Required cooling air flow for number of poles									
	2		4				6		8	
	IE2									
	50 Hz m^3/min	60 Hz m^3/min	50 Hz m^3/min		60 Hz m^3/min		50 Hz m^3/min	60 Hz m^3/min	50 Hz m^3/min	60 Hz m^3/min
63	0.83	1.02	0.41		0.48		0.27	0.32	–	–
71	1.49/1.73	1.81/2.08	0.75/0.86		0.87/1.02		0.49/0.58	0.58/0.71	0.36/0.42	0.43/0.54
80	1.82	2.18	0.9		1.1		0.6	0.73	0.44	0.53
90	3.3	4.03	1.64		2.01		1.11	1.31	0.76	0.94
	IE2/IE1		IE2		IE1		IE2/IE1		IE2/IE1	
	50 Hz m^3/min	60 Hz m^3/min	50 Hz m^3/min	60 Hz m^3/min	50 Hz m^3/min	60 Hz m^3/min	50 Hz m^3/min	60 Hz m^3/min	50 Hz m^3/min	60 Hz m^3/min
100	3.8	4.4	2.1	2.6	2.3	2.8	1.5	1.8	1.2	1.3
112	5.0/5.4 [1]	5.7/6.1 [1]	2.9	3.5	2.9	3.5	1.9	2.3	1.4	1.6
132	6.3	7.2	4.6	5.7	4.6	5.7	3.1	3.8	2.4	2.9
160	10.9	13.3	6.7	8.1	7.6	9.1	5	6.1	3.8	4.5
180	12.4	14.8	7.8	9.4	7.8	9.4	5.2	6.2	4.8	5.8
200	14.3	17.2	10.4	12.5	10.4	12.5	7.9	9.5	6	7.2
	IE2									
	50 Hz m^3/min	60 Hz m^3/min	50 Hz m^3/min		60 Hz m^3/min		50 Hz m^3/min	60 Hz m^3/min	50 Hz m^3/min	60 Hz m^3/min
225	22	26	19		23		15	17.5	11.5	13.5
250	28	33	21		24.5		19	22.5	14.5	16.3
280	32	37.5	32.5		39		24	29.5	18	22
315	48	58	49		58		34	40	25	30.5
	IE4/IE3									
	50 Hz m^3/min	60 Hz m^3/min	50 Hz m^3/min		60 Hz m^3/min		50 Hz m^3/min	60 Hz m^3/min	50 Hz m^3/min	60 Hz m^3/min
180	10.3	12.3	7		8.3		5.2	6.2	–	–
200	10.4	12.5	7.6		9.1		6.5	7.8	–	–
225	14	17.5	12		15		15.5	18	11.5	12.5
250	18.5	22	12		15		16	20	12	13.5
280	26	30.5	27.5		32.5		22.5	26.5	18	21.5
315	40	48.5	32.5		39		31	37	25	30.5
	IE3/IE2									
	50 Hz m^3/min	60 Hz m^3/min	50 Hz m^3/min		60 Hz m^3/min		50 Hz m^3/min	60 Hz m^3/min	50 Hz m^3/min	60 Hz m^3/min
80	1.36	1.66	0.66		0.8		0.42	0.51	0.3	0.38
90	2.86	3.41	1.34		1.7		0.87	1.06	0.65	0.8

1LE5 motors

Frame size	Required cooling air flow for number of poles							
	2		4		6		8	
	IE3/IE4							
	50 Hz m^3/min	60 Hz m^3/min	50 Hz m^3/min	60 Hz m^3/min	50 Hz m^3/min	60 Hz m^3/min	50 Hz m^3/min	60 Hz m^3/min
315	46/44	56/53	38.5/38	46/46	26.5/–	31/–	–	–
355	44/–	53/–	63/63	75/75	40.5/–	48.5/–	–	–

[1] Value: IE2/IE1

© Siemens AG 2018

Overview

The order variants for motor protection are coded with letters in the 15th position of the Article No. and, if necessary, using order codes.

In the standard version, the motor is designed without motor protection.
15th position of the Article No. letter **A.**

A distinction is made between current-dependent and motor-temperature-dependent protection devices.

The following applies to all motors:

The motors can withstand 1.5 times the rated current at rated voltage and frequency for two minutes (EN 60034).

Current dependent protection devices

Fuses are only used to protect power cables in the event of a short-circuit. They are not suitable for overload protection of the motor.

The motors are usually protected by thermally delayed overload protection devices (circuit breakers for motor protection or overload relays), for example with SIRIUS switching and protective devices. For further details, see Catalog IC 10.

This protection is current-dependent and is particularly effective in the case of a locked rotor.

For standard duty with short start-up times and starting currents not too excessive and for low numbers of switching operations, motor protection switches provide adequate protection. Motor protection switches are not suitable for heavy starting duty or large numbers of switching operations. Differences in the thermal time constants for the protection equipment and the motor result in unnecessary early tripping when the protection switch is set to rated current.

Motor-temperature-dependent protective devices and motor temperature detection with converter operation

Depending on the specific requirements, various different components can be built into the motor winding for switching off the motor before it overheats and for monitoring the winding temperature and motor temperature.

Temperature detectors – Bimetal switches

Bimetal switches operate on the principle of mechanical deformation as a result of long-term heating. Bimetal strips bent as a result of such heating have a spring action that results in sudden reversal of the curvature (concave to convex or vice-versa).

When a limit temperature is reached, these temperature detectors (NC contacts) can deactivate an auxiliary circuit. The circuit can only be reclosed following a considerable fall in temperature. Bimetal switches are suitable protection devices in the case of slowly rising motor temperatures. When the motor current rises quickly (e.g. with a locked rotor), these switches are not suitable due to their large thermal time constants.
Temperature detectors for tripping:
15th position of the Article No. letter **Z** and order code **Q3A.**

The temperature detectors have the following current-carrying capacity and switching capacity:
230 V, AC: 2.5 A
24 V, DC: 1.6 A

PTC thermistors – Thermistor motor protection

PTC thermistors provide the most comprehensive protection against thermal overloading of the motor. A rise in the winding temperature over the admissible value can be accurately detected thanks to the low heat capacity of these PTC (Positive Temperature Coefficient) thermistors and their excellent heat contact with the winding. When the limit temperature is reached (rated tripping temperature), the PTC thermistors undergo a sudden change in resistance. This is evaluated by tripping units and can be used to open auxiliary circuits. PTC thermistors cannot themselves be subjected to high currents and voltages. This results in the destruction of the semiconductor. The switching hysteresis of the PTC thermistor and tripping unit is low, which supports fast restarting of the drive. Motor protection of this type is recommended for heavy duty starting, switching duty, extreme changes in load, high ambient temperatures or fluctuating supply systems.

Motor protection with PTC thermistor for tripping. In the terminal box, two auxiliary terminals are required.
15th position of the Article No. letter **B.**

Two temperature sensor circuits are used if a warning is required before the motor is shut down (tripped).
The warning is normally set to 10 K below the tripping temperature.

Motor protection with PTC thermistor for alarm and tripping.
In the terminal box, 4 auxiliary terminals are required.
15th position of the Article No. letter **C.**

Motor protection for frame sizes 80 and 90 is implemented with the 15th position of the Article No. letter **B**, and with the order code **Q11** with a PTC thermistor.

Motor protection for frame sizes 80 and 90 is implemented with the 15th position of the Article No. letter **C**, and with the order code **Q12** with two PTC thermistors.

In order to achieve full thermal protection, it is necessary to combine a thermally delayed overcurrent release and a PTC thermistor. For full motor protection implemented only with PTC thermistors, please inquire.

The SIRIUS 3RN2 thermistor motor protection device for protecting motors against overheating by means of direct temperature measurement, also for a hazardous area with ATEX approval, can be ordered separately. For further details, see Catalog IC 10 or www.siemens.com/product?3RN2.

PTC sensor characteristic

The PTC thermistor is a temperature-dependent component. At the smallest changes in temperature in the region of the rated shutdown temperature, the resistance of the PTC increases steeply.

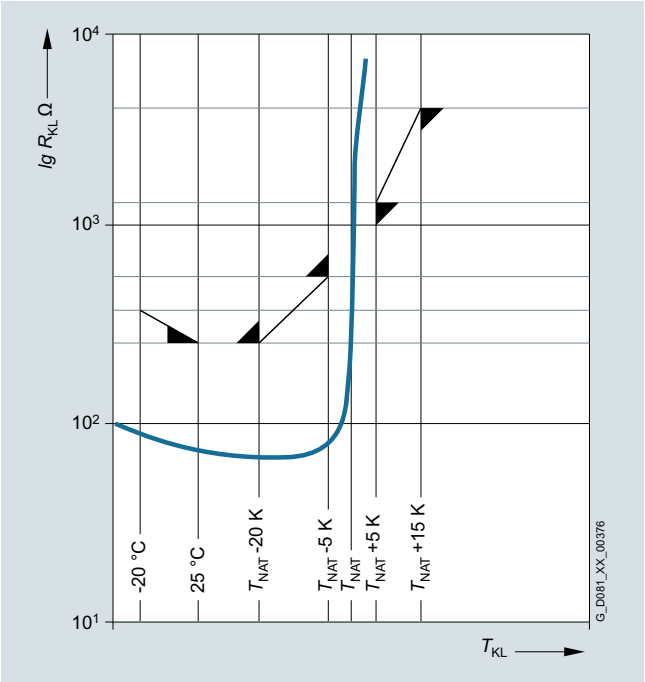

PTC sensor characteristic

© Siemens AG 2018

Overview (continued)

NTC thermistor

NTC thermistors have a negative temperature coefficient and conduct current at higher temperatures better than at lower temperatures.

NTC thermistors are typically used for temperature compensation of electronic circuits, or to limit inrush currents, to achieve the soft starting of electrical machines, for example.

Motor temperature monitoring and shutdown using NTC thermistors is unusual, but it is technically possible. The tripping temperature can be set when using suitable tripping devices of this type.

NTC thermistors for tripping: 15th position of the Article No. letter **Z** and order code **Q2A**.

For line operation, the SIRIUS temperature monitoring relays 3RS1, 3RS2, components of the protective device, can be ordered separately.
For further details, see Catalog IC 10 or www.siemens.com/product?3RS1.

NTC thermistor characteristic

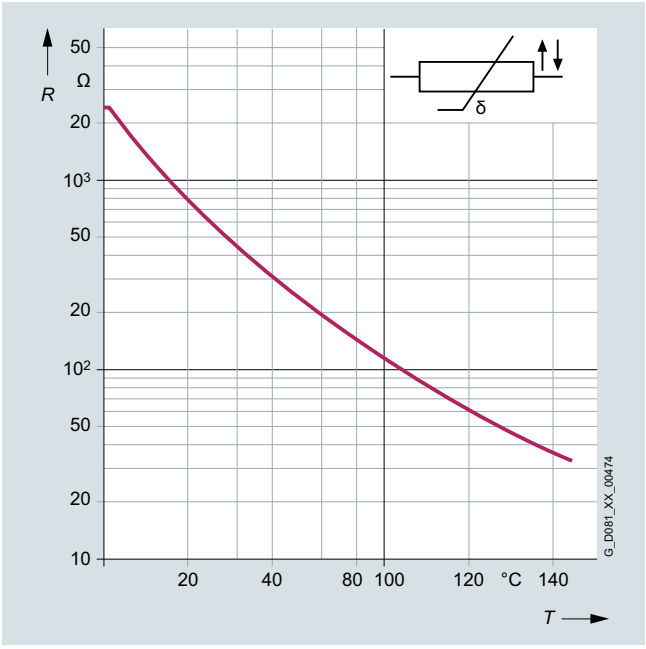

KTY 84-130 temperature sensor

This temperature sensor is a semiconductor which, in a similar manner to a PTC thermistor, changes its resistance as a function of its temperature at a defined rate. Within the measuring range, however, the KTY 84-130 characteristic rises almost linearly. The temperature sensor is embedded in the winding overhang of the motor in the same way as the components mentioned above. It is characterized by its outstanding precision, high reliability, and temperature stability, as well as a fast response time. Thanks to these properties, which permit the almost analog monitoring of winding temperature, the KTY 84-130 is preferred for converter operation.

Motor temperature detection with embedded KTY 84-130 temperature sensor: In the terminal box, two auxiliary terminals are required.
15th position of the Article No. letter **F.**

Temperatures for alarm and tripping can be set as required when using converters from Siemens that determine the motor temperature in accordance with the measuring principle described above. With these devices, the measured signal is evaluated directly in the converter.
For line operation, the SIRIUS 3RS1, 3RS2 temperature monitoring device, which is part of the protection equipment, can be ordered separately.
For further details, see Catalog IC 10 or www.siemens.com/product?3RS1.

KTY 84-130 temperature sensor characteristic

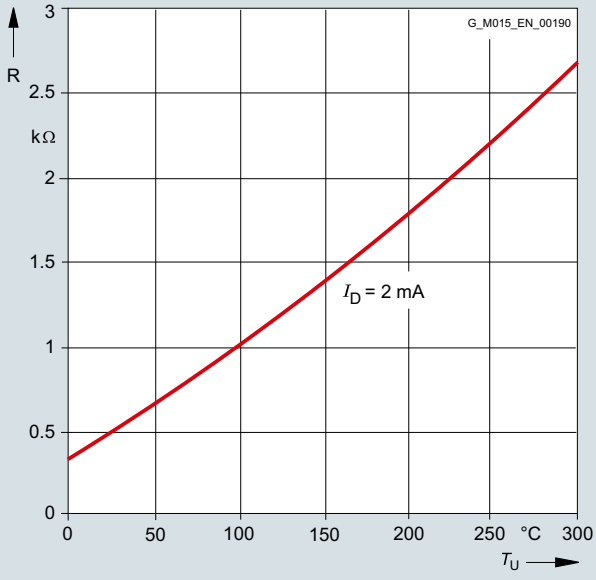

© Siemens AG 2018

Overview (continued)

Pt100/Pt1000 resistance thermometer

The resistance thermometer has a chip for a temperature sensor, the resistance of which changes in relation to temperature according to a series of reproducible basic values. The changes in resistance are transferred as changes in current. At 0 °C, the measurement resistances are adjusted to 100 Ω for the Pt100 and 1000 Ω for the Pt1000, and correspond to the accuracy class B (i.e. the relationship between resistance and temperature). The limit deviation is ±0.3 °C, and the admissible deviations are defined in EN 60751.

The Pt1000 resistance thermometer will, in the future, gradually replace the KTY84-130 temperature sensors available today. Similar to the method of operation of the Pt100, the relationship between the temperature and the electrical resistance of conductors is utilized in the Pt1000 to measure the temperature, just like with the additional resistance thermometers described above.
Pure metals undergo larger changes in resistance than alloys and have a relatively constant temperature coefficient.

The order options for the Pt100/Pt1000 temperature sensors are described in Chapter 2 (15th position of the Article No.: **H, J, K, L, P, Q**, or **R**, or order codes **Q35, Q36, Q60, Q61, Q62, Q63, Q64, Q72, Q78**, or **Q79**).

Temperatures for alarm and tripping can be set as required when using converters from Siemens that determine the motor temperature in accordance with the measuring principle described above. With these devices, the measured signal is evaluated directly in the converter.
In line operation, the SIRIUS 3RS1, 3RS2 temperature monitoring relay can be ordered separately for the protection equipment.
For further details, see Catalog IC 10 or
www.siemens.com/product?3RS1.

Pt100/Pt1000 resistance thermometer characteristics

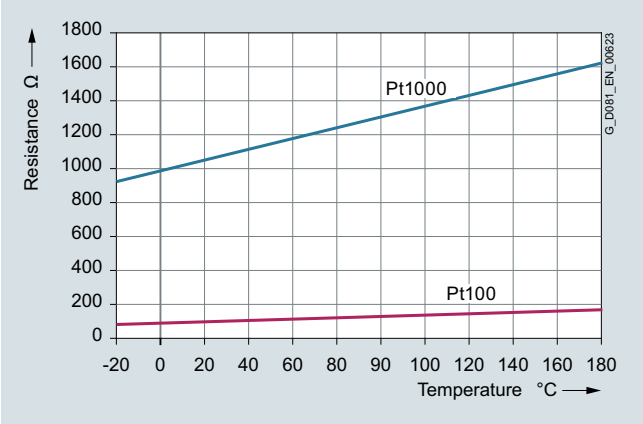

© Siemens AG 2018

Overview

Location of the terminal box

The terminal box of the motor can be mounted in four different locations or positions. For the motors of the 1LE10 aluminum series, frame sizes 63 and 71, the terminal box can only be mounted on the top (16th position of the Article No. **4**).
The position of the terminal box is coded using the 16th position of the motor Article No.
When defining the position of the terminal box, please observe the following:

- Motors with feet must always be viewed looking onto the drive end with the shaft in the horizontal position. The feet are then always at "6 o'clock". This is especially important with construction types IM B6, IM B7, and IM B8, and also applies to combined construction types such as IM B35.
- Flange-mounted motors (e.g. IM B5) whose drive-end flange has a condensation drainage hole must always be viewed looking onto the drive end with the shaft in the horizontal position. The condensation drainage hole is then always at "6 o'clock".

The aluminum series motors 1LE10 and 1PC10 with feet and standard power range have cast feet in the standard version in frame sizes up to 160, e.g. IM B3, IM B6, etc. (applies only to IE3 motors with standard housing; IE3 motors with long housing always have screwed-on feet). Motors from frame size 180 upwards have screwed-on feet. If rotation of the terminal box is to be possible in the future, the "Screwed-on feet" option, order code **H01**, must be ordered.
In accordance with the type of construction, spare holes that are not used for mounting the feet can be used by the customer.
If the customer would like this option, it is advisable to include order code **H10** "Housing with screw mounting" in the order – possible only for frame sizes 80, 90, 180 and 200. Responsibility for any strength calculations required for this type of customer mounting lies with the customer.

For all motors with increased power and with feet, the feet are screw-mounted as standard. The terminal box can be rotated later. Motors with frame sizes 225 to 315 are supplied as standard with cast feet.

Terminal box on right-hand side:
16th position of the Article No. digit **5**

Terminal box on left-hand side:
16th position of the Article No. digit **6**

Terminal box below:
16th position of the Article No. digit **7**

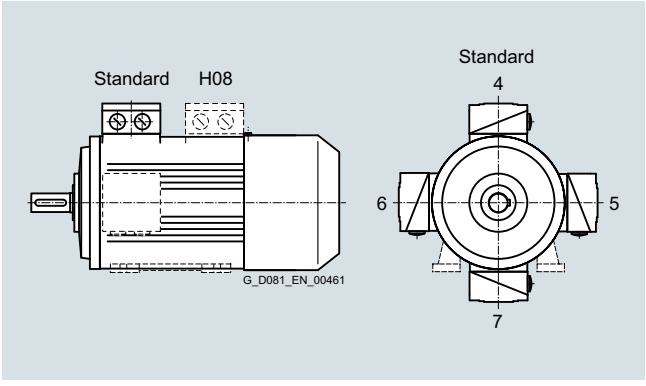

Location of the terminal box with the corresponding digits in the 16th position of the Article No.

The number of winding ends depends on the winding design. Three-phase motors are connected to the three phase conductors L1, L2 and L3 of a three-phase system. The rated voltage of the motor in the running connection must match the phase conductor voltages of the network.

When the three phases are operating in a time sequence and are connected to the terminals of the motor in alphabetical order U1, V1 and W1, clockwise rotation of the motor shaft is established as viewed onto the drive end. The direction of rotation of the motor can be changed to counterclockwise if two connecting leads are interchanged.

Labeled terminals are provided to connect the protective conductor.
A PE terminal is provided in the terminal box for grounding. A grounding terminal is provided on the outside of the motor frame – special version for 1LE1/1PC1 motors.
Order code **H04**

External grounding terminal/external grounding is standard for 1LE15/16 motors from frame size 180 upwards.

A second external grounding connection can also be ordered.
Order code **H70** (must be ordered in combination with option **H04**)

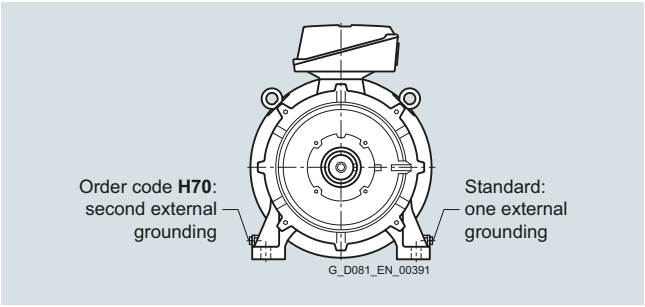

If a brake control system or thermal protection is installed, the connections will also be in the terminal box. The motors are suitable for direct connection to the line supply.

Design of the terminal box

The number of terminals and the size of the terminal box are designed for standard requirements.

For special requirements, or on customer request, a larger terminal box can be supplied.

For motors with frame sizes 71 up to 90, the following constraints apply:

When the terminal box is located on the left or right-hand sides, the customer must not align the cable entry towards the housing feet, because this can cause collisions between the motor connection cables and the foundations.

Larger terminal box
Order code **R50**

If the necessary installation angle of the motor would cause machine components to collide with the terminal box, the terminal box can be moved from the drive end (DE) to the non-drive end (NDE). Only use according to temperature class 155 (F). When the terminal box is rotated to the non-drive end (NDE) of the motor, it is important to note that dimensions "C" and "CA" will not comply with the values specified by EN 50347. Dimensional drawings can be requested via DT Configurator.
Order code **H08**

© Siemens AG 2018

Overview (continued)

Motor connection

Line feeder cables
The line feeder cables must be dimensioned acc. to DIN VDE 0298. The number of required feeder cables, if necessary in parallel, is defined by:

- The max. cable cross-section which can be connected
- The cable type
- The cable routing
- The ambient temperature and the corresponding admissible current in accordance with DIN VDE 0298

For motors with auxiliary terminals (e.g. 15th position of the Article No. letter **B**), additional cable entry holes are provided (M16 × 1.5 or M20 × 1.5 depending on frame size).
For further details, see the data sheet function in the DT Configurator.

The terminal box is located on the housing and bolted in place. The terminal box can be turned by 4 × 90° degrees on the terminal base of the machine housing in the case of a terminal board with 6 terminal studs (standard version).

Parallel feeders
Some motors must be fitted with parallel feeders due to the maximum permissible current per terminal.
These motors are indicated in the selection and ordering data in the respective chapter.

The temperature rises in the terminal box must be taken into account when selecting the connection cable or individual connections.
These approximate temperature rises are as follows:

- Range of ambient temperature (T_{amb}) +50 K for motors with temperature class Th.Cl.155 (F).
- Range of ambient temperature (T_{amb}) +60 K for motors with temperature class Th.Cl.180 (H).
- Without any specifications in field 19 (T_{amb}) on the rating plate, T_{amb} is equal to 40 °C.

Cable entry on terminal box

With a view onto the drive end of the motor with the shaft in the horizontal position and the terminal box on the top, the cable entry is always on the right-hand side of the motor, as shown in the figure below. Standard position 0°, (smoke extraction motors, order code **R13**). The terminal box can be rotated on the base of the motor housing such that the cable entry is located in the positions given below:

- Towards the drive end (DE)
  (rotation of terminal box by 90°,
  entry from DE) for B5 types of constructions only with order code **H08**!
  With B14 construction types, the customer must ensure that sufficient space is available for cable outlet.
  Order code **R10**
- Towards the fan end (NDE)
  (rotation of terminal box by 90°,
  entry from NDE)
  Order code **R11**
- Opposite the standard position 0°
  (rotation of terminal box by 180°,
  entry opposite the standard position 0°)
  Order code **R12**

The dimensions of the terminal box are listed in the section "Dimensions" on pages 2/122 to 2/153 in accordance with the frame size and the "Dimensional drawings".
If the position of the terminal box (right-hand side, left-hand side, or top) is changed, the position of the cable entry must be checked and, if necessary, ordered with the corresponding order codes (**R10**, **R11**, and **R12**).

Location of the cable entries with the corresponding order codes

Motor	Frame size	Terminal box	Terminal box position				Rotation of the terminal box and cable entry				
			Top	Right-hand side	Left-hand side	Retrofitting possible	Continuously by 360°	-90°	+90°	180°	Retrofitting possible
			16th position of Article No. and with specification of order code, Article No. with **-Z**					Article No. with **-Z** and order code			
Type		Type	**4**	**5**	**6**	**4**					
			Order code								
						H01		**R10**	**R11**	**R12**	
1LE10, 1MB10, 1PC10	63 … 71	TB1B00, TB1B10	✔	–	–	– [1]	–	✔	✔	✔	Yes
	80 … 90	TB1E00, TB1E10	✔	✔	✔	– [1]	–	✔	✔	✔	Yes
	100, 112	TB1F00, TB1F10	✔	✔	✔	– [1]	–	✔	✔	✔	Yes
	132	TB1H00, TB1H10	✔	✔	✔	– [1]	–	✔	✔	✔	Yes
	160, 180	TB1J00, TB1J10	✔	✔	✔	– [1]	–	✔	✔	✔	Yes
	200	TB1L00, TB1L10	✔	✔	✔	– [1]	–	✔	✔	✔	Yes
1LE15	71	TB1D01	✔	✔	✔	–	–	✔	✔	✔	Yes
	80, 90	TB1D01	✔	✔	✔	–	–	✔	✔	✔	Yes
1LE15, 1LE16, 1MB15, 1MB16	100 … 315	TB1F01 … TB1R01	✔	✔	✔	–	–	✔	✔	✔	Yes

Motor	Frame size	Terminal box	Terminal box position										
			Top Left	Top Right	45° Left	45° Right	90° Right	90° Left	Bottom	-90°	+90°	180°	Retrofitting possible
			16th position of Article No. and with specification of order code, Article No. with **-Z**							Article No. with **-Z** and order code			
Type		Type	**0**	**1**	**2**	**3**	**5**	**6**	**9**	**R10**	**R11**	**R12**	
1LE5	315	TB3Q01	✔	✔	✔	✔	✔	✔	✔	✔	✔	✔	Yes
	355	TB3R01	✔	✔	✔	✔	✔	✔	✔	✔ [2]	✔	✔	Yes

[1] Not applicable for smoke extraction motors.

[2] Not possible together with terminal box code (16th position of the Article No.) **0**, **1**, **5**, **6** and flange A 900.

© Siemens AG 2018

Overview (continued)

Terminal box in standard position, detailed view

Ordering example:

Terminal box on right-hand side (16th position of the Article No. digit **5**):

Cable entry is from below unless another order code is specified.

Cable entry from drive end (DE) – Article No. with **-Z** and order code **R10**.

For cable entry to a standard terminal box, a metal cable gland can be ordered for motor connection.
One metal cable gland – Article No. with **-Z** and order code **R15**.

For special requirements for which standard holes for the cable entries are inadequate for the UK market, reduction pieces for M cable glands in accordance with British Standard that are mounted on both cable entries can be supplied (only up to frame size 160).
Order code **R30**

Frame size	Cable entry acc. to	
	IEC	British Standard
100	2 × M32	2 × M20
112/132	2 × M32	2 × M25
160	2 × M40	2 × M32

Motor connectors

Motors of frame sizes 80 to 132 can be supplied with a motor connector.
The motor connectors are mounted on the specially designed terminal box at the factory and are aligned towards NDE in the basic version. The terminal boxes can be rotated by 4 × 90° on the base of the motor housing (order codes **R10**, **R12**, and **R13**).

The following motor connector variants are available:

- Motor connector HAN10B-10E
  Order code **R70**
- Motor connector HAN10B-10E EMC
  Order code **R71**
- Motor connector HAN3A-Q12 EMC
  Order code **R72**
- Motor connector HAN3A-Q12
  Order code **R73**

Motor connector assignment

Motor Type	Frame size	Motor connectors Type	Size of the terminal box
1LE10	63 … 70	HAN10B-10E HAN10B-10E EMC	TB1B60
	80 … 90	HAN3A-Q12 HAN3A-Q12 EMC	TB1E00 with mounted brake TB1E10
	80 … 90	HAN10B-10E HAN10B-10E EMC	Only possible with TB1E10
1LE10, 1PC10	100 … 132	HAN10B-10E HAN10B-10E EMC	Currently only available with TB1F10 (frame sizes 100 and 112) or TB1H10 (frame size 132)

Technical characteristic values of motor connectors according to EN 60664-1 and EN 61984

Characteristic value	Motor connector			
	HAN3A-Q12		**HAN10B-10E**	
	Degree of pollution			
	3	2	3	2
Rated current	10 A		16 A	
Rated voltage	400 V	400/690 V	500 V	400/690 V
Rated voltage acc. to UL/CSA	600 V		600 V	

For further technical specifications of the motor connectors, refer to the catalog of Harting Deutschland GmbH & Co. at www.harting.com
or
https://b2b.harting.com/ebusiness/de/industrie-steckverbinder-han/100382.

Protruding cable ends

For confined spaces, protruding cable ends can be ordered without a terminal box with cover plate.

The following lengths of protruding cables can be ordered as standard using order codes:

- 3 cables protruding, 0.5 m long [1)]
  Order code **R20**
- 3 cables protruding, 1.5 m long [1)]
  Order code **R21**
- 6 cables protruding, 0.5 m long
  Order code **R22**
- 6 cables protruding, 1.5 m long
  Order code **R23**
- 6 cables protruding, 3.0 m long
  Order code **R24**

The cross-section of the named cable refers to a coolant temperature of up to CT 40 °C.

[1)] For 3 protruding cables only, it must be specified in plain text whether star or delta connection is required (voltage code **90** and **M1Y**).

© Siemens AG 2018

Overview (continued)

Terminal box type TB1B00

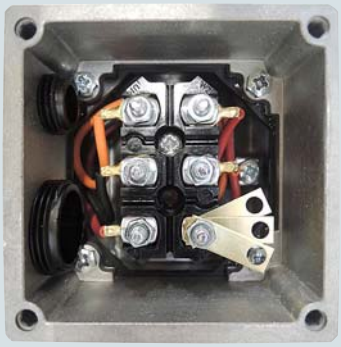

Terminal box type TB1B10

Terminal box type TB1E00

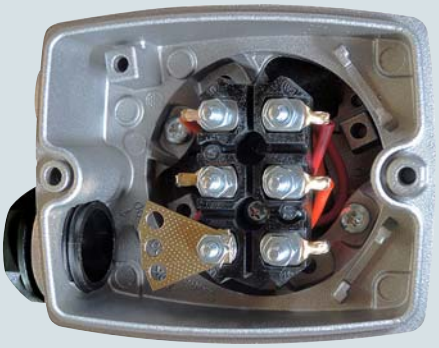

Terminal box type TB1E10 – order code **R50**

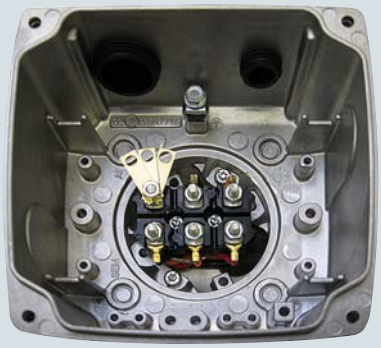

Terminal box types TB1F00, TB1H00, TB1J00

Terminal box type TB1F10, TB1H10, TB1J10 – order code **R50**

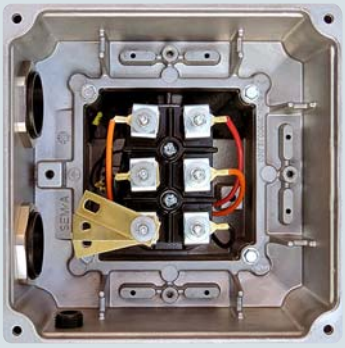

Terminal box type TB1L00

Terminal box type TB1L10 – order code **R50**

© Siemens AG 2018

Overview (continued)

Terminal box type TB1J01

Terminal box type TB1L01

Terminal box type TB1N01

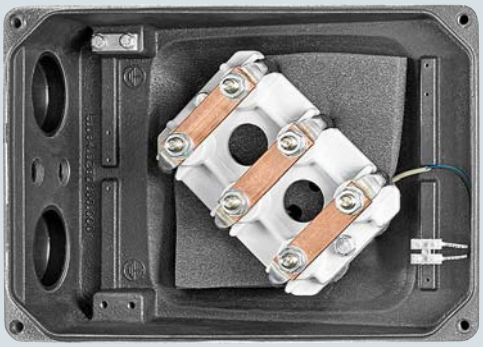

Terminal box type TB1Q01

Motor connector type HAN3A-Q12

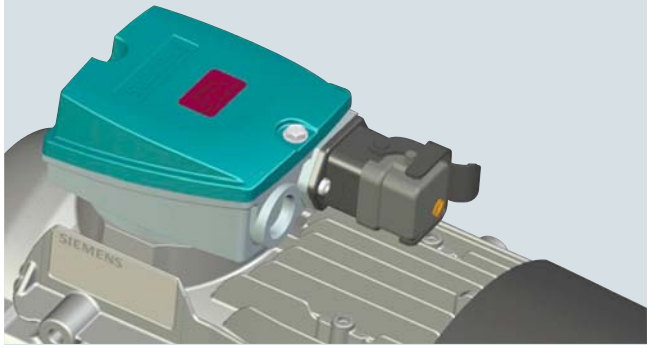

Motor connector type HAN10B-10E

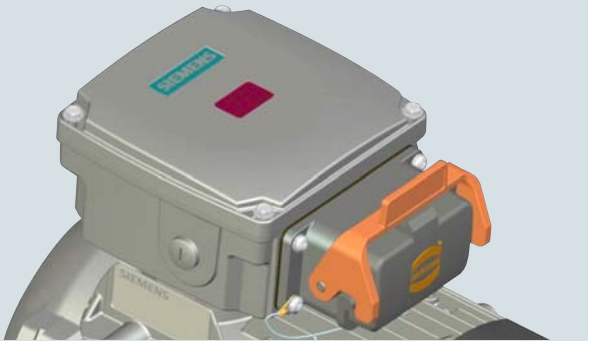

© Siemens AG 2018

Overview (continued)

Basic data for terminal boxes for 1LE1, 1MB1 and 1PC1 motors

Motor	Frame size	Terminal box	Cable entries/locking	Terminal box material	Feeder connection
1LE10/1MB10/1PC10					
1LE10	63 ... 71	TB1B00 TB1B10	2 entries complete with sealing plugs, thread in terminal box, terminal box mounted and screwed in place	Aluminum alloy	• Cable lug • Rigid cable, no cable lug
1LE10	80 … 90	TB1E00	1 entry complete with sealing plugs, thread in terminal box, (2 entries with additional mounting components in the winding) Terminal box mounted and screwed	Aluminum alloy	• Cable lug • Rigid cable, no cable lug
1LE10/ 1MB10	80 … 90	TB1E10	2 entries complete with sealing plugs, thread in terminal box, terminal box mounted and screwed in place	Aluminum alloy	• Cable lug • Rigid cable, no cable lug
1LE10 1MB10 [1] 1PC10	100 … 180 80 … 160 100 … 160	TB1F00 TB1H00 TB1J00 TB1F10 TB1H10 TB1J10	2 entries complete with sealing plugs and locknuts, terminal box mounted and screwed in place	Aluminum alloy	• Cable lug • Rigid cable, no cable lug
1LE10	200	TB1L00 TB1L10	2 entries complete with sealing plugs, thread in terminal box, terminal box mounted and screwed in place	Aluminum alloy	• Cable lug • Rigid cable, no cable lug
1LE15/1LE16/1LE5/1MB15/1MB16					
1LE15/ 1MB15 [1]	71 … 90	TB1D01	2 entries complete with sealing plugs, thread in terminal box, terminal box mounted and screwed in place	Cast iron	• Cable lug • Rigid cable, no cable lug
1LE15/ 1LE16/ 1MB15/ 1MB16 [1]	100 … 315	TB1F01 … TB1R01	2 entries complete with sealing plugs, thread in terminal box, terminal box mounted and screwed in place	Cast iron	• Cable lug • Rigid cable, no cable lug
1LE5	315 … 355	TB3Q01 TB3R01	2 entries complete with sealing plugs, thread in terminal box, terminal box mounted and screwed in place	Cast iron	• Cable lug • Rigid cable, no cable lug
1LE5	355 (500 kW)	TB3R01	4 entries complete with sealing plugs, thread in terminal box, terminal box mounted and screwed in place	Cast iron	• Cable lug • Rigid cable, no cable lug

[1] The certified cable entries are supplied as standard for explosion-proof motors.
- Frame sizes 71 to 200: One certified metric cable gland and one certified metric sealing plug
- Frame sizes 225 to 315: Two certified metric cable glands

© Siemens AG 2018

Overview (continued)

Technical specifications for terminal boxes for 1LE1, 1LE5, 1MB1, and 1PC1 motors

Frame size	Terminal box [1]	Number of terminals	Thread of the contact screw	Max. connectable cable	Outer cable diameter (sealing range)	Cable entry [2] [3]
	Standard/larger (order code **R50**)			mm^2	mm	
1LE10/1MB10/1PC1						
63 … 71	TB1B00/TB1B10	6	M4	1.5/2.5 with cable lug	M16 × 1.5: 4.5 … 10; M25 × 1.5: 9 … 17	1 × M25 × 1.5/ 1 × M16 × 1.5 + 1 × M25 × 1.5
80 and 90	TB1E00/TB1E10 [4]	6	M4	1.5/2.5 with cable lug	M16 × 1.5: 4.5 … 10; M25 × 1.5: 9 … 17	1 × M25 × 1.5/ 1 × M16 × 1.5 + 1 × M25 × 1.5
100	TB1F00/TB1F10	6	M4	4	11 … 21	2 × M32 × 1.5
112						
132	TB1H00/TB1H10	6	M4	6	11 … 21	2 × M32 × 1.5
160	TB1J00/TB1J10	6	M5	16	19 … 28	2 × M40 × 1.5
180						
200	TB1L00/TB1L10	6	M6	25	27 … 35	2 × M50 × 1.5
1LE15/1MB15						
71 … 90	TB1D01	6	M4	1.5/2.5 with cable lug	M16 × 1.5: 4.5 … 10 M25 × 1.5: 9 … 17	1 × M16 × 1.5 + 1 × M25 × 1.5
1LE15/1LE16/1MB15/1MB16						
100	TB1F01/TB1J01	6	M4	4	11 … 21	2 × M32 × 1.5/ 2 × M40 × 1.5
112						
132	TB1H01/TB1J01	6	M4	6	11 … 21	2 × M32 × 1.5
160	TB1J01/TB1K01	6	M5	16	19 … 28	2 × M40 × 1.5
180	TB1J01/TB1K01	6	M5/M6	16/25	19 … 28/ 27 … 35	2 × M40 × 1.5/ 2 × M50 × 1.5
200	TB1L01/TB1L01	6	M6/M8	25/35	27 … 35/ 27 … 35	2 × M50 × 1.5/ 2 × M50 × 1.5
225	TB1L01/TB1N01	6	M8/M10	35/120	27 … 35/ 34 … 42	2 × M50 × 1.5/ 2 × M63 × 1.5
250	TB1N01/TB1Q01	6	M10/M12	120/240	34 … 42/ 38 … 45	2 × M63 × 1.5
280						2 × M63 × 1.5
315	TB1Q01/TB1R01	6	M12/M16	240	38 … 45/ 44 … 54	2 × M63 × 1.5
						2 × M63 × 1.5
	TB3Q01	6	M12	185	38 … 45	2 × M63 × 1.5
	TB3Q61			240	42 … 54	2 × M63 × 1.5
355	TB1R01	6	M16	240	56 … 68.5	2 × M80 × 2
		12	2 × M16			4 × M80 × 2
1LE55/1LE56						
315	TB3Q01/TB3R01	6	M12/M16	185/240	38 … 45/ 42 … 54	2 × M63 × 1.5
						4 × M80 × 2
355	TB3R01/TB3R61	12	M16/2 × M16	300	56 … 68.5/ 56 … 68.5	2 × M80 × 2
						4 × M80 × 2

– not available

Terminal connection

The terminal board accommodates the terminals that are connected to the leads to the motor windings. The terminals are designed so that for frame sizes 71 to 315, the external (line) connections can be made without the need for cable lugs.

[1] In addition to the exact part designation, please specify the machine type and the serial number in all orders for spare parts and repair parts.

[2] Designed for cable glands with O-ring.

[3] NPT threads can be ordered with order code **Y61**.

[4] For 1LE1021 and 1LE1023 terminal boxes TB1E10 normal version.

© Siemens AG 2018

Overview (continued)

Maximum number of auxiliary terminal boxes for main terminal box

Maximum number of auxiliary terminal boxes TB2J01, TB2N01 (order code **R62**, **R63**) **in combination with standard terminal box**

		Frame size									
		100, 112	132	160	180	200	225	250	280	315	355
		Terminal box									
Auxiliary terminal box		Type									
Type	Order code	TB1F01	TB1H01	TB1J01		TB1L01		TB1N01		TB1Q01	TB3Q01	TB3R01
TB2J01	**R62**	–	–	2		2		2		2	4	4
TB2N01	**R63**	–	–	–		–		–		–	2	2

Maximum number of auxiliary terminal boxes TB2J01, TB2N01 (order code **R62**, **R63**) **in combination with large terminal box** (order code **R50**)

		Frame size									
		100, 112	132	160	180	200	225	250	280	315	355
		Terminal box									
Auxiliary terminal box		Type									
Type	Order code	TB1J01		TB1K01		TB1L01	TB1N01	TB1Q01		TB1R01	TB3R01	
TB2J01	**R62**	2	2	2		2	2	2		2 (3, 4 on requ.)	4	4
TB2N01	**R63**	–	–	–		–	–	–		–	2	2

Maximum number of auxiliary terminal boxes TB2J01, TB2N01 (order code **R62**, **R63**) **in combination with universal terminal box** (order code **R52** or **R53**)

		Frame size								
		100 … 160	180	200	225	250	280	315	355
		Terminal box								
Auxiliary terminal box		Type								
Type	Order code		TB1J61	TB1L61		TB1N61		TB1Q61	TB3Q41	TB3R41
TB2J01	**R62**	Not available	2	2		2 (3, 4 on requ.)		2 (3, 4 on requ.)	4	4
TB2N01	**R63**	–	–	–		–		–	2	2

Position of auxiliary terminal box in relation to position of TB1J01, TB1L01, TB1N01, TB1Q01, TB1K01 main terminal box

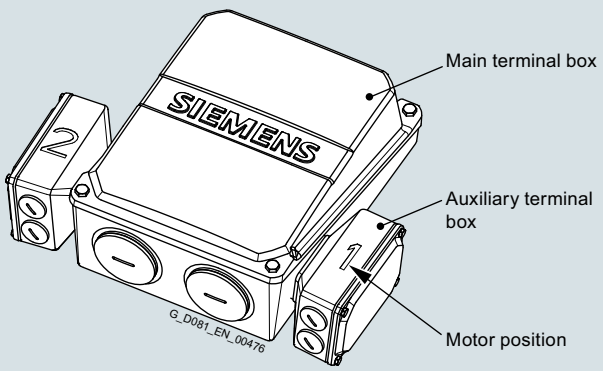

Auxiliary terminal box TB2J01 (order code **R62**) **in combination with TB1J01, TB1L01, TB1N01, TB1Q01, TB1K01 main terminal box**

	Position of the main terminal box											
	Top				Right-hand side				Left-hand side			
	16th position of Article No. and when ordering with order code, Article No. with **-Z**											
	4				**5**				**6**			
	Rotation of terminal box											
	0° (default)	90°, entry from DE	90°, entry from NDE	180°	0° (default)	90°, entry from DE	90°, entry from NDE	180°	0° (default)	90°, entry from DE	90°, entry from NDE	180°
	Order code											
Number of auxiliary terminal boxes	–	**R10**	**R11**	**R12**	–	**R10**	**R11**	**R12**	–	**R10**	**R11**	**R12**
	Positions of auxiliary terminal boxes – see Figure											
1	1	1	1	2	1	2	1	2	2	1	2	1
2	1 + 2	1 + 2	1 + 2	1 + 2	1 + 2	–	–	1 + 2	1 + 2	–	–	1 + 2

© Siemens AG 2018

Overview (continued)

Position of auxiliary terminal box in relation to position of TB1R01, TB1J61, TB1L61, TB1N61, TB1Q61 main terminal box

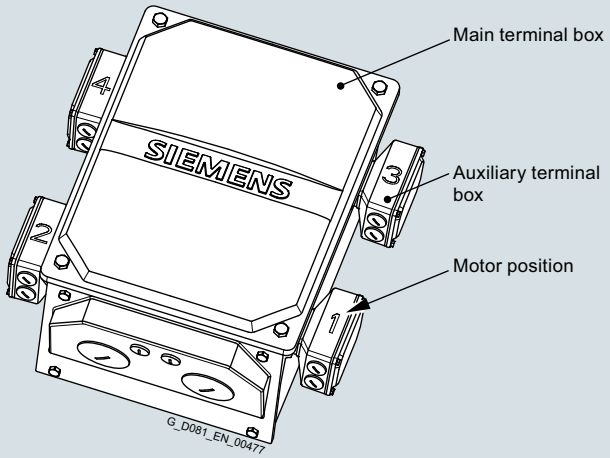

Auxiliary terminal box TB2J01 (order code **R62**) **in combination with TB1R01, TB1J61, TB1L61, TB1N61, TB1Q61 main terminal box**

	Position of the main terminal box											
	Top				Right-hand side				Left-hand side			
	16th position of Article No. and when ordering with order code, Article No. with **-Z**											
	4				**5**				**6**			
	Rotation of terminal box											
	0° (default)	90°, entry from DE	90°, entry from NDE	180°	0° (default)	90°, entry from DE	90°, entry from NDE	180°	0° (default)	90°, entry from DE	90°, entry from NDE	180°
	Order code											
Number of Auxiliary terminal boxes	–	**R10**	**R11**	**R12**	–	**R10**	**R11**	**R12**	–	**R10**	**R11**	**R12**
	Positions of auxiliary terminal boxes – see Figure											
1	1	1	1	2	1	2	1	2	2	1	2	1
2	1 + 3	1 + 3	1 + 3	2 + 4	1 + 3	2 + 4	1 + 3	2 + 4	2 + 4	1 + 3	2 + 4	1 + 3
(3 on requ.)	1 + 2 + 3	1 + 2 + 3	1 + 2 + 3	1 + 2 + 4	1 + 2 + 3	–	–	1 + 2 + 4	1 + 2 + 4	–	–	1 + 2 + 3
(4 on requ.)	1 + 2 + 3 + 4	1 + 2 + 3 + 4	1 + 2 + 3 + 4	1 + 2 + 3 + 4	1 + 2 + 3 + 4	–	–	1 + 2 + 3 + 4	1 + 2 + 3 + 4	–	–	1 + 2 + 3 + 4

© Siemens AG 2018

Overview

All motors are designed to degree of protection IP55. They can be installed in dusty or humid environments. The motors are suitable for operation in tropical climates. Guide value < 60% relative air humidity at CT 40 °C. Other requirements are available on request (see table on page 1/34).

Brief explanation of the degree of protection

IP54:
- Protection against harmful dust deposits
- Protected against spray water

IP55:
- Protection against harmful dust deposits
- Protection against water jets from any direction

IP56:
- Protection against harmful dust deposits
- Protection against powerful water jets from any direction

Order code **H22**
Important: Note that submersion by waves or total immersion, even temporarily, is not permitted especially in the case of motors with fans. This corresponds to IP67 or IP68 degree of protection (please inquire).
EN 60034-5 defines protection level 6 for water protection as: "Protection against water due to heavy seas or water in a powerful jet". IP56 degree of protection can only be used with the requirement "Protection against a powerful jet" and not for the requirement "Protection against heavy sea".
Not possible in combination with brake 2LM8 (order code **F01**).

IP65:
- Complete protection against dust deposits
- Protection against water jets from any direction

Order code **H20**
In EN 60034-5, the code 6 for protection against the ingress of foreign bodies and touch hazard protection for electrical machines is not listed – Data for code 6 (protection against the ingress of dust) is given in EN 60529.
Not possible in combination with HOG 9 DN 1024 I rotary pulse encoder (order code **G05**) and/or brake 2LM8 (order code **F01**) and/or paint finish, cast-iron parts primed (order code **S00**).

EN 60529 contains a comprehensive description of this degree of protection as well as test conditions.

With motors that have a vertical shaft extension, the end user must prevent an ingress of fluid along the shaft.

For motors with shaft extension pointing downwards, the version "Protective cover for types of construction" order code **H00** is urgently recommended, see also the explanations on "Types of construction" on page 1/51.

With flange-mounted motors, for IM V3 type of construction, collection of fluid in the flange basin can be prevented by drainage holes (on request).

The condensation drainage holes at the drive end (DE) and non-drive end (NDE) are sealed (IP55) on delivery. If the condensation drainage holes are ordered for motors of the IM B6, IM B7 or IM B8 type of construction (feet on side or top),
the position of the drainage holes will be in the correct position for the type of construction.
Order code **H03**

© Siemens AG 2018

Overview

Standard types of construction and special types of construction

Type of construction acc. to EN 60034-7		Frame size	Letter of the 14th position of the Article No.	Additional identification code **–Z** with order code
Without flange				
IM B3/IM 1001		63 to 355	**A**	**–**
IM B6/IM 1051	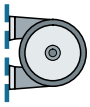	63 to 355	**T**	**–**
IM B7/IM 1061	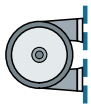	63 to 355	**U**	**–**
IM B8/IM 1071		63 to 355	**V**	**–**
IM V5/IM1011 without protective cover		63 to 355	**C** [1]	**–**
IM V6/IM 1031	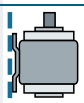	63 to 355	**D**	**–**
IM V5/IM 1011 with protective cover	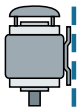	71 to 355	**C**	**+ H00** [2]
With flange				
IM B5/IM 3001	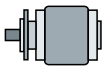	63 to 355	**F**	**–**
IM V1/IM 3011 without protective cover	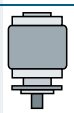	63 to 355	**G** [1]	**–**
IM V1/IM 3011 with protective cover	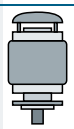	71 to 355	**G**	**+ H00** [2]
IM V3/IM 3031		63 to 355	**H**	**–**
IM B35/IM 2001	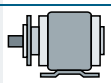	63 to 355	**J**	**–**

In the EN 50347 standard, flanges FF with through holes and flanges FT with tapped holes are specified.

[1] Ⓔx The following applies for explosion-proof motors:
In the case of the types of construction with shaft extension pointing downwards, the version "with protective cover" is required. For types of construction with shaft extension pointing upwards, a suitable cover must be implemented to prevent small parts from falling into the fan cover (see the standard IEC/EN 60079-0). The cover must not block the cooling air flow.

[2] Standard cylindrical shaft extension (second shaft extension) **L05** is not possible.

© Siemens AG 2018

Overview (continued)

Type of construction acc. to EN 60034-7	Frame size	Letter of the 14th position of the Article No.	Additional identification code **–Z** with order code
With flange			
IM B14/IM 3601	80 to 315	**K**	**–**
IM V19/IM 3631	80 to 315	**L**	**–**
IM V18/IM 3611 without protective cover	80 to 315	**M** [1]	**–**
IM V 18/IM 3611 with protective cover 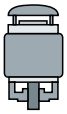	80 to 315	**M**	**+ H00** [2]
IM B34/IM 2101	80 to 315	**N**	**–**
With special flange			
IM B14/IM 3601	80 to 315	**K**	**+ P01**
IM B34/IM 2101	80 to 315	**N**	**+ P01**
IM V18/IM 3611 without protective cover 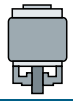	80 to 315	**M** [1]	**+ P01**
IM V 18/IM 3611 with protective cover 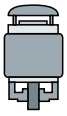	80 to 315	**M**	**+ P01** **+ H00** [2]
IM V19/IM 3631	80 to 315	**L**	**+ P01**

In EN 50347, flanges are assigned to the frame sizes as FT with tapped holes. See the table on the next page for flange dimensions.

The dimensions of the following types of construction are identical:
IM B3, IM B6, IM B7, IM B8, IM V5 and IM V6
IM B5, IM V1 and IM V3
IM B14, IM V18 and IM V19

Motors in the standard power range can be ordered in basic types of construction IM B3, IM B5 or IM B14 and operated in mounting positions IM B6, IM B7, IM B8, IM V5, IM V6, IM V1, IM V3 (up to frame size 160 L) or IM V18 and IM V19.
Lifting eyes are available for transport and installation in a horizontal position. In conjunction with the lifting eyes, for the purpose of stabilizing the position when the motor is arranged vertically, additional lifting straps (EN 1492-1) and/or clamping bands (EN 12195-2) must be used.

When a motor for mounting position IM V1 is ordered directly, the motor is supplied with lifting eyes for vertical mounting (up to frame size 90 and frame sizes 180 and 200 for aluminum motors without eyebolts).

The motors are designated in accordance with the types of construction on the rating plate.

With motors that have a vertical shaft extension, the end user must prevent an ingress of fluid along the shaft.
In the case of all types of construction with shaft extension pointing downwards, the version "with protective cover" is urgently recommended, see section "Degrees of protection" on page 1/50 – housing version.

Motors with feet, in some cases, have two fixing holes at the non-drive end (NDE), see dimension tables on pages 2/122 to 2/153.

A screw-mounted cover (made of sheet metal or plastic depending on shaft height) is included as standard for horizontal types of construction and types of construction with shaft pointing upwards (14th position of the Article No. letter **A, T, U, V, D, F, H, J, K, L, N**) on motors up to FS 160 in combination with condensation drainage holes, order code **H03**.

[1] Ⓔx The following applies for explosion-proof motors:
In the case of the types of construction with shaft extension pointing downwards, the version "with protective cover" is required. For types of construction with shaft extension pointing upwards, a suitable cover must be implemented to prevent small parts from falling into the fan cover (see the standard IEC/EN 60079-0). The cover must not block the cooling air flow.

[2] Standard cylindrical shaft extension (second shaft extension) **L05** is not possible.

© Siemens AG 2018

Overview

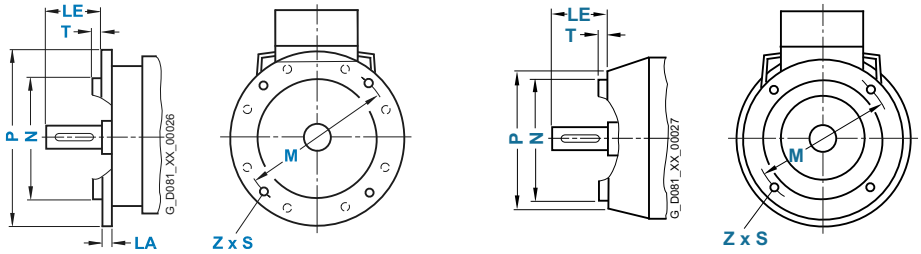

In EN 50347, the frame sizes are allocated flange FF with through holes and flange FT with tapped holes. The designation of flange A and C according to DIN 42948 (invalid since September 2003) are also listed for information purposes. See the table below.
(**Z** = the number of retaining holes)

Frame size	Type of construction	Flange type	Flange with through holes (**FF**/A) Flange with tapped holes (**FT**/C)		Dimension designation acc. to **IEC**							
			Acc. to EN 50347	Acc. to DIN 42948	**LA**	**LE**	**M**	**N**	**P**	**S**	**T**	**Z**
63 M	IM B5, IM B35, IM V1, IM V3	Flange	**FF115**	A 140	–	23	115	95	140	10	3	4
	IM B14, IM B34, IM V18, IM V19	Flange	**FT75**	C 90	–	23	75	60	90	M6	2.5	4
	IM B14, IM B34, IM V18, IM V19	Next largest flange – Order code **P01**	**FT100**	C 120	–	23	100	80	120	M6	3	4
71 M	IM B5, IM B35, IM V1, IM V3	Flange	**FF130**	A 160	5	30	130	110	160	10	3.5	4
	IM B14, IM B34, IM V18, IM V19	Flange	**FT85**	C 105	–	30	85	70	105	M6	2.5	4
	IM B14, IM B34, IM V18, IM V19	Next largest flange [1] – Order code **P01**	**FT115**	C 140	–	30	115	95	140	M8	3	4
80 M	IM B5, IM B35, IM V1, IM V3	Flange	**FF165**	A 200	10	40	165	130	200	12	3.5	4
	IM B14, IM B34, IM V18, IM V19	Flange	**FT100**	C 120	–	40	100	80	120	M6	3	4
	IM B14, IM B34, IM V18, IM V19	Next largest flange [1] – Order code **P01**	**FT130**	C 160	–	40	130	110	160	M8	3.5	4
90 S/L	IM B5, IM B35, IM V1, IM V3	Flange	**FF165**	A 200	10	50	165	130	200	12	3.5	4
	IM B14, IM B34, IM V18, IM V19	Flange	**FT115**	C 140	–	50	115	95	140	M8	3	4
	IM B14, IM B34, IM V18, IM V19	Next largest flange – Order code **P01**	**FT130**	C 160	–	50	130	110	160	M8	3.5	4
100 L	IM B5, IM B35, IM V1, IM V3	Flange	**FF215**	A 250	11	60	215	180	250	14.5	4	4
	IM B5, IM B35, IM V1, IM V3	Next largest flange – Order code **P01**	**FF265**	A 300	12	60	265	230	300	14.5	4	4
	IM B5, IM B35, IM V1, IM V3	Next smallest flange – Order code **P02**	**FF165**	A 200	11	60	165	130	200	12	3.5	4
	IM B14, IM B34, IM V18, IM V19	Flange	**FT130**	C 160	–	60	130	110	160	M8	3.5	4
	IM B14, IM B34, IM V18, IM V19	Next largest flange – Order code **P01**	**FT165**	C 200	–	60	165	130	200	M10	3.5	4
112 M	IM B5, IM B35, IM V1, IM V3	Flange	**FF215**	A 250	11	60	215	180	250	14.5	4	4
	IM B5, IM B35, IM V1, IM V3	Next largest flange – Order code **P01**	**FF265**	A 300	12	60	265	230	300	14.5	4	4
	IM B5, IM B35, IM V1, IM V3	Next smallest flange – Order code **P02**	**FF165**	A 200	11	60	165	130	200	12	3.5	4
	IM B14, IM B34, IM V18, IM V19	Flange	**FT130**	C 160	–	60	130	110	160	M8	3.5	4
	IM B14, IM B34, IM V18, IM V19	Next largest flange – Order code **P01**	**FT165**	C 200	–	60	165	130	200	M10	3.5	4
132 S/M	IM B5, IM B35, IM V1, IM V3	Flange	**FF265**	A 300	12	80	265	230	300	14.5	4	4
	IM B5, IM B35, IM V1, IM V3	Next largest flange – Order code **P01**	**FF300**	A 350	13	80	300	250	350	18.5	5	4
	IM B5, IM B35, IM V1, IM V3	Next smallest flange – Order code **P02**	**FF215**	A 250	11	80	215	180	250	14.5	4	4
	IM B14, IM B34, IM V18, IM V19	Flange	**FT165**	C 200	–	80	165	130	200	M10	3.5	4
	IM B14, IM B34, IM V18, IM V19	Next largest flange – Order code **P01**	**FT215**	C 250	–	80	215	180	250	M12	4	4
160 M/L	IM B5, IM B35, IM V1, IM V3	Flange	**FF300**	A 350	13	110	300	250	350	18.5	5	4
	IM B5, IM B35, IM V1, IM V3	Next smallest flange – Order code **P02**	**FF265**	A 300	12	110	265	230	300	14.5	4	4
	IM B14, IM B34, IM V18, IM V19	Flange	**FT215**	C 250	–	110	215	180	250	M12	4	4
180 M/L	IM B5, IM B35, IM V1, IM V3	Flange	**FF300**	A 350	13	110	300	250	350	18.5	5	4
	IM B5, IM B35, IM V1, IM V3	Next smallest flange – Order code **P02**	**FF 265**	A 300	12	110	265	230	300	14.5	4	4
200 L	IM B5, IM B35, IM V1, IM V3	Flange	**FF350**	A 400	15	110	350	300	400	18.5	5	4
	IM B5, IM B35, IM V1, IM V3	Next smallest flange – Order code **P02**	**FF300**	A 350	13	110	300	250	350	18.5	5	4
225 S/M 2-pole 4- … 8-pole	IM B5, IM B35, IM V1, IM V3	Flange	**FF400**	A 450	16	110 140	400	350	450	18.5	5	8
250 M	IM B5, IM B35, IM V1, IM V3	Flange	**FF500**	A 550	18	140	500	450	550	18.5	5	8
280 S/M	IM B5, IM B35, IM V1, IM V3	Flange	**FF500**	A 550	18	140	500	450	550	18.5	5	8
315 S/M/L 2-pole 4- … 8-pole	IM B5, IM B35, IM V1, IM V3	Flange	**FF600**	A 660	22	140 170	600	550	660	24	6	8
315 L for 1LE5 2-pole 4-pole	IM B5, IM B35, IM V1, IM V3	Flange	**FF740**	A 800	25	140 170	740	680	800	24	6	8
2-pole 4-pole	IM B5, IM B35, IM V1, IM V3	Next smallest flange – Order code **P02**	**FF600**	A 660	22	140 170	600	550	660	24	6	8
355 M/L for 1LE5 2-pole 4-pole	IM B5, IM B35, IM V1, IM V3	Flange	**FF840**	A 900	25	140 170	840	780	900	24	6	8
2-pole 4-pole	IM B5, IM B35, IM V1, IM V3	Next smallest flange – Order code **P02**	**FF740**	A 800	25	140 170	740	680	800	24	6	8

[1] With reference to standard EN 50347, flanges that are 2 steps larger are used with option **P01** in the frame sizes 71 and 80.

© Siemens AG 2018

Overview

Shaft extension

60° center hole acc. to DIN 332, Part 2 with M3 to M24 tapped hole depending on the shaft diameter (see dimension tables in section 2 of the catalog).

DE (shaft extension)	
Diameter	Thread
mm	mm
7 ... 10	DR M3
> 10 ... 13	DR M4
> 13 ... 16	DR M5
> 16 ... 21	DR M6
> 21 ... 24	DR M8
> 24 ... 30	DR M10
> 30 ... 38	DR M12
> 38 ... 50	DR M16/DS M16
> 50 ... 85	DS M20
> 85 ... 130	DS M24

Shaft extension with standard dimensions, without feather keyway

For motor series 1LE1, 1MB1 and 1PC1, the standard shaft extension can be ordered with standard dimensions without a feather keyway. The key convention does not have to be stamped onto the rating plate for balancing.
Order code **L04**

Standard shaft made of stainless steel

A standard shaft made of stainless steel can be ordered (e.g. 1.4021) for the 1LE1, 1MB1 and 1PC1 motor series.
This is only possible for shaft extensions of standard dimensions.
Order code **L06**

Special non-rusting materials are only available on request.

Non-standard cylindrical shaft extension

The non-standard cylindrical shaft extension can be used on the drive end (DE) (with plain text according to table). The feather keys are supplied in every case.
Order code **Y58**

For order code **Y58** non-standard cylindrical shaft extension (DE):

- Dimension D: less than or equal to the inner diameter of the roller bearing, tolerance band less than tolerance band acc. to EN 50347.
- Dimension E: less than or equal to 2 × length E (standard) of the shaft extension.

See the table below "Admissible changes to the shaft extension DE" and the dimension tables in the relevant sections of the catalog.

Admissible changes to the shaft extension DE (**Y58**)

Motor series	Frame size	No. of poles	Shaft extension length E in mm		Shaft extension diameter D in mm		
			Standard	up to max.	minimum	Standard	up to max. [1]
1LE1	63	2 ... 6	23	46	11	11	12
1LE1, 1MB1	71	2 ... 8	30	60	14	14	15
	80	2 ... 8	40	80	19	19	20
	90		50	100	24	24	25
1LE1, 1MB1, 1PC1	100	2 ... 8	60	120	24	28	30
	112						
	132	2 ... 8	80	160	28	38	40
	160	2 ... 8	110	220	38	42	45
1LE15, 1LE16, 1MB1	180	2 ... 8	110	220	On request	48	48
	200	2 ... 8	110	220		55	55
	225	2	110	220		55	60
		4 ... 8	140	280		60	60
	250	2	140	280		60	70
		4 ... 8	140	280		65	70
	280	2	140	280		65	70
		4 ... 8	140	280		75	80
	315	2	140	280		65	75
		4 ... 8	140	280		80	90
1LE5	315	2	140	280		65	75
		4	170	280		85	90
	355	2	140	280		75	85
		4	170	340		95	95

Standard, cylindrical shaft extension NDE acc. to EN 50347 (second shaft extension)

Order code **L05** (on request)

For a coupling output, the standard, cylindrical shaft extension can transmit the full rated power.

Please also inquire about the transmitted power and admissible cantilever force if belt pulleys, chains or gear pinions are used on the standard, cylindrical shaft extension.

A standard, cylindrical shaft extension (second shaft extension) NDE is not available if a rotary pulse encoder and/or a separately driven fan has been mounted onto the motor. Please inquire for mounted brakes.

Dimensions and tolerances for keyways and keys are designed to EN 50347. The motors are always supplied with a key inserted in the shaft.

If the second shaft extension has non-standard dimensions, this must be ordered with order code **L05** in combination with order code **Y59** non-standard shaft dimensions NDE.

For the order code **L05**, this is with order code **Y59** (with plain text specifications according to the table).

- Dimension D: less than or equal to fan hub inner diameter, for frame size 160 tolerance band is less than tolerance band to EN 50347
- Dimension E: less than or equal to 2 × length E (standard) of the shaft extension

See the table below "Admissible changes to the shaft extension NDE" and the dimension tables in the relevant sections of the catalog.

Admissible changes to the shaft extension NDE (**Y59**)

Motor series	Frame size	No. of poles	Shaft extension length E in mm		Shaft extension diameter D in mm		
			Standard	up to max.	minimum	Standard	up to max. [1]
1LE1	63	2 ... 6	23	46	11	11	12
1LE1, 1MB1	71	2 ... 8	30	60		14	15
1LE1, 1MB1	80/90	2 ... 8	40	80		19	20
1LE1, 1MB1, 1PC1	100	2 ... 8	50	100		24	25
	112						
	132	2 ... 8	60	120		28	35
	160	2 ... 8	110	220		42	45
1LE15, 1LE16, 1MB1	180	2 ... 8	110	220		48	48
	200	2 ... 8	110	220		55	55
	225	2	110	220	On request	48	55
		4 ... 8	110	220		55	55
	250	2	110	220		55	70
		4 ... 8	140	280		60	70
	280	2	140	280		60	70
		4 ... 8	140	280		65	70
	315	2	140	280		60	75
		4 ... 8	140	280		70	75
1LE5	315	2	140	280		60	75
		4	140	280		70	75
	355	2	140	280		60	75
		4	170	280		80	90

Non-standard, cylindrical shaft extensions up to the specified lengths and diameters can be supplied for the motor series listed in the tables "Admissible changes to the shaft extension DE (**Y58**)" and "Admissible changes to the shaft extension NDE (**Y59**)". All other dimensions are available on request.

It is the responsibility of the customer to ensure that the admissible cantilever forces are reduced in accordance with the non-standard shaft extension.

[1] At maximum admissible diameter, a step increase in shaft diameter is not possible.

© Siemens AG 2018

Overview (continued)

Concentricity of shaft extension, coaxiality, and linear movement in accordance with IEC 60072-1 Tolerance R for flange-mounted motors

The following are specified in DIN 42955 with Tolerance N (normal) and Tolerance R (reduced):

1. Concentricity tolerances for the shaft extension
2. Coaxiality tolerances for the shaft extension and flange centering
3. Linear movement tolerances for the shaft extension and flange surface

The concentricity of the shaft extension, coaxiality and linear movement according to IEC 60072-1 Tolerance R for flange-mounted motors can be ordered using order code **L08**.
This order code can be combined for motors with deep-groove bearings of series 60.., 62.. and 63… This is not possible in combination with a mounted brake or encoder.

Concentricity of the shaft extension can be ordered according to IEC 60072-1 Tolerance R for types of construction without flange with order code **L07**.

Concentricity tolerance for the shaft extension

Diameter of the cylindrical shaft extension	Concentricity tolerance	
d	N (normal)	R (reduced)
mm	mm	mm
≤ 10	0.03	0.015
> 10 … 18	0.035	0.018
> 18 … 30	0.04	0.021
> 30 … 50	0.05	0.025
> 50 … 80	0.06	0.03
> 80 … 120	0.07	0.035
> 120 … 180	0.08	0.04
> 180 … 250	0.09	0.045
> 250 … 315	0.1	0.05
> 315 … 400	0.11	0.055
> 400 … 500	0.125	0.063
> 500 … 600	0.14	0.07

IEC dimension code D

Coaxiality tolerance of the centering spigot and linear movement tolerance of the flange surface to the shaft extension axis

Mounting flange Centering diameter	Coaxiality tolerance and linear movement tolerance	
b_1	N (normal)	R (reduced)
mm	mm	mm
≤ 22	0.05	0.025
> 22 … < 40	0.06	0.03
40 … 100	0.08	0.04
> 100 … 230	0.1	0.05
> 230 … 450	0.125	0.063
> 450 … 800	0.16	0.08
> 800 … 1400	0.2	0.1
> 1400 … 2000	0.25	0.125
> 2000 … 2240	0.315	0.16

IEC dimension code N

Overview

The flange-mounted motors can be equipped with a radial sealing ring in order to mount gearing.
Order code **H23**

It must be ensured that the sealing ring is lubricated using grease, oil mist, or oil spray. (It is not admissible to use pressurized oil > 0.1 bar.) We recommend that the admissible bearing loads are carefully checked.

© Siemens AG 2018

Overview

All rotors are dynamically balanced with an inserted half key. This corresponds to vibration severity grade A (normal or standard). EN 60034-14 Sept. 2004 regulates the vibrational behavior of machinery. Based on ISO 8821, the key convention "half key (H)" must be used for balancing.

Note:

If there is a keyway, a full feather key is always inserted on delivery.

The type of key convention is stamped on the face of the shaft extension at the customer side DE/NDE:

F = Balancing with full key
(full-key convention)
H = Balancing with half key
(half-key convention) – standard
N = Balancing without key –
Plain text required (convention without key)

For motors up to frame size 112 the code is stamped on the rating plate.
Full-key balancing or balancing with full feather key (F) is possible by specifying order code **L02** (additional charge).

Balancing without feather key (N) is possible by specifying order code **L01** (additional charge).

Vibration severity grade A is the standard version and is valid up to a rated frequency of 60 Hz. If 2-pole motors of frame sizes 280 and 315 are to be rigidly installed, cast feet are necessary in order to comply with the vibration requirements of IEC 60034-14. IE4 2-pole motors in frame size 315 and pole-changing motors (4-pole/2-pole) fulfill the vibration requirements specified in IEC 60034-14 only when the motor is elastically suspended.

The low-vibration version B can be supplied to fulfill stricter requirements on smooth running (additional charge).

Vibration severity grade B
Not possible with parallel roller bearings.
Order code **L00**

The order code **L00** vibration severity grade B is not possible in combination with order codes **G40**, **G41**, **G42**. 2-pole trans-standard aluminum motors in frame sizes 180 and 200 (14th position of the Article No. is A, C, D, J, T, U, V) and order code **L00** have cast-iron feet.

This vibration is assessed in accordance with vibration severity grade A or B according to EN 60034-14 (see table).

The limits stated in the table apply to uncoupled, freely suspended, idling motors.

For converter operation with frequencies higher than 60 Hz, special balancing is required for compliance with the specified limit values (plain text: maximum supply frequency/speed).

For further details, see the online help in the DT Configurator.

Limits (rms values) for max. vibration severity in terms of vibration displacement (s), vibration velocity (v), and acceleration (a) for the shaft height H

Vibration severity grade	Machine installation	Shaft height H in mm								
		56 ≤ H ≤ 132			132 < H ≤ 280			H > 280		
		s_{rms} µm	v_{rms} mm/s	a_{rms} m/s²	s_{rms} µm	v_{rms} mm/s	a_{rms} m/s²	s_{rms} µm	v_{rms} mm/s	a_{rms} m/s²
A	Free suspension	25	1.6	2.5	35	2.2	3.5	45	2.8	4.4
	Rigid clamping	21	1.3	2.0	29	1.8	2.8	37	2.3	3.6
B	Free suspension	11	0.7	1.1	18	1.1	1.7	29	1.8	2.8
	Rigid clamping	–	–	–	14	0.9	1.4	24	1.5	2.4

For details, see standard EN 60034-14 Sept. 2004.

If the type tests for machines with shaft height H > 280 mm demonstrate a determining component with twice the line frequency, the limit for maximum vibration severity in Table 1 (grade A) can be increased from 2.3 mm/s (rms value) to 2.8 mm/s (rms value). Higher values must be agreed beforehand. A component with twice the line frequency is regarded as dominant if the type test shows that it is greater than 2.3 mm/s (rms value).

© Siemens AG 2018

Overview

The noise is measured in accordance with EN ISO 1680 in a dead room. It is specified as A-weighted enveloping surface sound pressure level L_{pfA} in dB (A).
This value is the spatial average value of the sound pressure levels measured at the measuring surface. The measuring surface is a cube 1 m away from the surface of the motor. The sound power level is also specified as L_{WA} in dB (A).
The specified values are valid at 50 Hz and rated power (see the selection and ordering data). The tolerance is +3 dB. Noise values for motors in converter operation on request.

To reduce noise levels, 2-pole motors of frame size 132 S and higher can be equipped with a unidirectional axial fan. The values are listed in the table "Low-noise version" below.

Clockwise rotation:
Order code **F77**

Counterclockwise rotation:
Order code **F78**

Second shaft extension and/or mountings (mounting of brake, separately driven fan or encoder) not possible.

Low-noise version

Motor series	Frame size	2-pole motors	
		L_{pfA} dB (A)	L_{WA} dB (A)
1LE1 [1]	132	60	72
1MB1 [1]	160	60	72
1LE10, 1LE15/6, 1MB15/6	180	63	76
	200	64	77
1LE15/6, 1MB15/6	225	72	86
	250	73	87
	280	72	85
	315	76	90
1LE5	315	78.9	93.6
	355	79.2	94

[1] With the exception of 1LE1 and 1MB1 motors with option **F90** – version "Forced-air cooled motors without external fan and fan cover".

© Siemens AG 2018

Overview

Bearing lifetime (nominal lifetime)

The nominal bearing lifetime is defined according to standardized calculation procedures (ISO 281) and is reached or even exceeded for 90 % of the bearings when the motors are operated in compliance with the data provided in the catalog.

Under average operating conditions, a lifetime (L_{10h}) of 100 000 hours can be achieved.

Generally, the bearing lifetime is defined by the bearing size, the bearing load, the operating conditions, the speed and the grease lifetime. A bearing lifetime calculation is possible on request.

Bearing system

The bearing lifetime of motors with horizontal mounting is 40 000 hours if there is no additional axial loading at the coupling output and 20 000 hours when utilized according to the maximum admissible load. This assumes that the motor is operated at 50 Hz. The nominal bearing lifetime is reduced for converter operation at higher frequencies.

In order to achieve the calculated lifetime in continuous operation, the admissible vibration values (measured at bearing plate) must be determined according to evaluation zones A and B stipulated in ISO 10816. If higher vibration velocities occur in operation (e.g. with option **H02**), special measures must be taken (please inquire).

Due to their physical characteristics, variable-speed motors have a different bearing lifetime under the same load conditions – this relationship is linear, i.e. if the frequency increases by 20 % from 50 Hz to 60 Hz, the lifetime decreases by 20 % from 20 000 to 16 000 hours under the load conditions specified in the catalog.
If the frequency falls by 20 % from 50 Hz to 40 Hz, under the load conditions specified in the catalog, the lifetime rises by 20 % from 20 000 to 24 000 hours.

It should be observed that, for types of construction IM B6, IM B7, IM B8, IM V5, and IM V6, the belt tension is only permitted to act parallel to the mounting plane or towards the mounting plane and the feet must be supported. Both feet must be secured for foot-mounting types of construction.

In the basic bearing system, the floating bearing is situated at the drive end (DE) and the located bearing is situated at the non-drive end (NDE).

The bearing system is axially preloaded with a spring element at the drive end (DE) to ensure smooth running of the motor without play (see Fig. 1 in the diagrams of bearings on page 1/65).

From frame size 160 upwards, the located bearing is axially secured at the non-drive end (NDE). Up to frame size 132, an additional axially-secured located bearing can be supplied on the non-drive end (NDE) complete with a retaining ring (see Fig. 2 in the diagrams of bearings on page 1/65).
Order code **L21**

On request, the located bearing can also be supplied at the drive end (DE) (see Fig. 3 in the diagrams of bearings on Page 1/65). A located bearing at the drive end (DE) is recommended when gearing is installed or pumps and fans are mounted directly on the motor shaft.
Order code **L20**

For increased cantilever forces (e.g. belt drives), reinforced bearings can be used at the drive end (DE).
Order code **L22**

1LE1, 1MB1, and 1PC1 motors can be supplied with reinforced bearings (size range 03) at both ends.
In this case, the bearing plates are made of cast iron (standard for series 1LE16 motors).
Order code **L25**

A measuring nipple for SPM shock pulse measurement can be mounted to check bearing vibration. The motors have an M8 tapped hole for each bearing plate and a measuring nipple with a protective cap. If a second tapped hole is provided, it is fitted with a sealing cap. Not possible for frame sizes < 100.
Order code **Q01**
Bearing selection for increased cantilever forces (see the Table "Bearing selection for 1LE10, 1MB10, and 1PC10 motors – Bearings for increased cantilever forces" on page 1/61) – for the maximum axial load, see page 1/71 onwards.

Bearing insulation

To prevent damage caused by bearing currents, insulated bearings can be supplied for frame sizes 225 to 355 – they are recommended for motors from frame size 225 upwards.

- **L50** (DE bearing insulation) means NDE located bearing as standard
- **L51** (NDE bearing insulation) means DE located bearing as standard
- **L50** + **L51** (insulated DE and NDE bearings) means NDE located bearing as standard
- Combination of order codes **L50** or **L51** or **L50** + **L51** with **L22** (bearing version for increased cantilever forces) means NDE located bearing as standard.

According to IEC 60034-1-11, it is up to the user in the case of DE bearing insulation (order code **L50**) + NDE bearing insulation (order code **L51**) to ensure grounding of the rotor.

The rotor grounding can be implemented either in the system via the coupled driven machine or in the motor via a grounding brush.

The grounding brush (order code **L52**) must always be provided when the driven machine is connected to the motor via an insulating coupling or an insulating belt output shaft.

Permanent lubrication

On motors equipped with permanent lubrication, the bearing grease lifetime is matched to the bearing lifetime. This can, however, only be achieved if the motor is operated in accordance with the catalog specifications.
In the basic version, the motors have permanent lubrication.

© Siemens AG 2018

Overview (continued)

Regreasing

For motors which can be regreased at defined regreasing intervals, the bearing lifetime can be extended and/or unfavorable factors such as temperature, mounting conditions, speed, bearing size, and mechanical load can be compensated.

This regreasing option is possible in the following frame sizes:

- Frame sizes 100 to 160: M8 × 1 acc. to DIN 71412-A (conical lubricating nipple)
- Frame sizes 180 to 315: M10 × 1 acc. to DIN 3404-A (flat lubricating nipple).

Order code **L23**
(frame sizes ≥ 280 basic version, for the Performance Line motors of frame sizes ≥ 160 basic version)

A regreasing device with M10 × 1 lubricating nipple to DIN 71412-A can be optionally provided for frame sizes 180 to 315.
Order code **L19**

In the case of motors equipped with regreasing device, information regarding regreasing intervals, quantity of grease, type of grease and any additional data is provided on the lubrication plate or rating plate. For regreasing intervals for the basic version, see the Table "Grease lifetime and regreasing intervals for horizontal installation". For motors with a mounted holding brake (order code **F01**) a regreasing device cannot be installed, including up to FS 160.

Mechanical stress and grease lifetime

High speeds that exceed the rated speed with converter operation and the resulting increased vibrations alter the mechanical running smoothness and the bearings are subjected to increased mechanical stress. This reduces the grease lifetime and the bearing lifetime (please inquire where applicable).

The use of rigid couplings should be avoided as far as possible. For converter operation in particular, compliance with the mechanical limit speeds n_{max} at maximum supply frequency f_{max} is essential, see the following table "Mechanical limit speeds n_{max} at maximum supply frequency f_{max}".

© Siemens AG 2018

Overview (continued)

Mechanical limit speeds n_{max} at maximum supply frequency f_{max} (standard values) for 1LE1, 1PC1 motors – basic version and 1LE15 and 1LE16 motors – basic version with order codes L22, L25, L28 – 1MB10/5/6 motors with order codes L22 and L25

Frame size	Type	2-pole		4-pole		6-pole		8-pole	
		n_{max} rpm	f_{max} Hz	n_{max} rpm	f_{max} Hz	n_{max} rpm	f_{max} Hz	n_{max} rpm	f_{max} Hz
1LE10 motors, basic version									
	1LE10..-								
63	**0B…**	6000	100	4200	140	3600	180	3000	200
71	**0C…**	6000	100	4200	140	3600	180	3000	200
80 M	**0D…**	6000	100	4200	140	3600	180	3000	200
90 S/L	**0E…**	6000	100	4200	140	3600	180	3000	200
1LE15 Basic Line motors – bearings for increased cantilever forces – order code L22 **1LE15 Basic Line motors – bearings reinforced at both ends – order code L25**									
	1LE15..-								
71 M	**0C…**	6000	100	4200	140	3600	180	3000	200
80 M	**0D…**	6000	100	4200	140	3600	180	3000	200
90 S/L	**0E…**	6000	100	4200	140	3600	180	3000	200
1LE10, 1PC1 motors, basic version **1LE15 Basic Line and 1LE16 Performance Line – bearings for increased cantilever forces – order code L22** **1LE15 Basic Line and 1LE16 Performance Line – bearings reinforced at both ends – order code L25**									
	1LE1...- **1PC1...-**								
100 L	**1A…**	6000	100	4200	140	3600	180	3000	200
112 M	**1B…**	6000	100	4200	140	3600	180	3000	200
132 S/M	**1C…**	5600	90	4200	140	3600	180	3000	200
160 M/L	**1D…**	4800	80	4200	140	3600	180	3000	200
180 M/L	**1E…**	4600	76	4200	140	3600	180	3000	200
200 L	**2A…**	4500	75	4200	140	3600	180	3000	200
1LE15 Basic Line and 1LE16 Performance Line – basic version **1LE15 Basic Line and 1LE16 Performance Line – bearings for increased cantilever forces – order code L22** **1LE15 Basic Line and 1LE16 Performance Line – bearings reinforced at both ends – order code L25** **1LE15 Basic Line and 1LE16 Performance Line – DE cylindrical roller bearings and NDE reinforced bearings – order code L28**									
	1LE15..- **1LE16..-**								
180 M/L	**1E…**	4600	76	4200	140	3600	180	3000	200
200 L	**2A…**	4500	75	4200	140	3600	180	3000	200
225 S/M	**2B…**	4500	75	4500	150	4400	220	4400	293
250 M	**2C…**	3900	65	3700	123	3700	185	3700	247
280 S/M	**2D…**	3600	60	3000	100	3000	150	3000	200
315 S/M/L	**3A…**	3600	60	2600	87	2600	130	2600	173
1LE55 Basic Line and 1LE56 Performance Line – basic version **1LE55 Basic Line and 1LE56 Performance Line – bearings for increased cantilever forces – order code L22**									
	1LE55..- **1LE56..-**								
315 L	**3A…**	5200	87	3400	113	3400	170	3400	227
355 M/L	**3B…**	5200	87	3800	93	2800	140	2800	187

The specified limit speeds are applicable to motors without additional mountings, such as brakes or rotary encoders. In such applications, the characteristics of the respective mounting parts must be taken into account.

© Siemens AG 2018

Overview (continued)

Grease lifetime and regreasing intervals for horizontal installation

Motor series	Frame size	No. of poles				
Permanent lubrication [1]						
			Grease lifetime up to CT 40 °C [2]			
1LE1/1MB1/1PC1	71 … 250	2 … 8	20000 h or 40000 h [3]			
Regreasing [1]						
			Lubrication interval ISO Cl F 155 °C		Lubrication interval ISO Cl H 180 °C	
			CT ≤ 60 °C	60 °C < CT ≤ 80 °C	40 °C < CT ≤ 60 °C	60 °C < CT ≤ 80 °C
1LE1/1MB1/1PC1	100 … 160	2 … 8	8000 h	4000 h [2]	4000 h	2000 h [2]
	180 … 280	2	4000 h	2000 h [2]	1000 h	1000 h [2]
		4 … 8	8000 h	4000 h [2]	2000 h	2000 h [2]
	315	2	3000 h	1500 h [2]	1000 h	1000 h [2]
		4 … 8	6000 h	3000 h [2]	1500 h	1500 h [2]
			CT ≤ 40 °C	40 °C < CT ≤ 80 °C	CT ≤ 40 °C	40 °C < CT ≤ 80 °C
1LE5	315, 355	2	3000 h	1500 h [2]	3000 h	1500 h [2]
		4, 6	6000 h	3000 h [2]	6000 h	3000 h [2]

Bearing selection table for 1LE10, 1MB10, and 1PC10 motors – basic version

The bearing selection tables are only intended for planning purposes. Authoritative information on the actual type of bearings fitted in motors already supplied can be obtained by the factory by quoting the serial number or can be read from the rating plate.

When deep-groove bearings with side plates are used, the side plate is on the inside. Located bearing at drive end (DE) for 1LE1, 1MB1 and 1PC1 motors, see special version Fig. 2 in the "Diagrams of bearings" on Page 1/65.

Frame size	No. of poles	Drive end (DE) bearing Horizontal and vertical types of construction	Non-drive end (NDE) bearing Horizontal and vertical types of construction	Fig. No. on page 1/65
1LE10/1MB10				
63	2 … 6	6201 2ZC3	6201 2ZC3	–
71	2 … 8	6202 2ZC3	6202 2ZC3	–
80	2 … 8	6004 2ZC3	6004 2ZC3	**Fig. 1**
90	2 … 8	6205 2ZC3	6004 2ZC3	**Fig. 1**
1LE10/1MB10/1PC10				
100 L	2 … 8	6206 2ZC3	6206 2ZC3	**Fig. 1**
112 M	2 … 8	6206 2ZC3	6206 2ZC3	**Fig. 1**
132 S/M	2 … 8	6208 2ZC3 [4]	6208 2ZC3 [4]	**Fig. 1**
160 M/L	2 … 8	6209 2ZC3 [4]	6209 2ZC3 [4]	**Fig. 2**
1LE10				
180 M/L	2 … 8	6210 ZC3 [5]	6210 ZC3 [5]	**Fig. 4**
200 L	2 … 8	6212 ZC3 [5]	6212 ZC3 [5]	**Fig. 4**

Bearing selection table for 1LE10, 1MB10, and 1PC10 motors – bearings for increased cantilever forces – order code L22

Please inquire about noise and vibration data. The bearing selection tables are only intended for planning purposes. Authoritative information on the actual type of bearings fitted in motors already supplied can be obtained by the factory by quoting the serial number or can be read from the rating plate.
When deep-groove bearings with side plates are used, the side plate is on the inside.

Frame size	No. of poles	Drive end (DE) bearing Horizontal and vertical types of construction	Non-drive end (NDE) bearing Horizontal and vertical types of construction	Fig. No. on page 1/65
1LE10/1MB10				
80	2 … 8	6304 2ZC3	6204 2ZC3	–
90	2 … 8	6305 2ZC3	6205 2ZC3	–
1LE10/1MB10/1PC10				
100 L	2 … 8	6306 2ZC3	6206 2ZC3	**Fig. 1**
112 M	2 … 8	6306 2ZC3	6206 2ZC3	
132 S/M	2 … 8	6308 2ZC3 [4]	6208 2ZC3 [4]	
160 M/L	2 … 8	6309 2ZC3 [4]	6209 2ZC3 [4]	**Fig. 2**
1LE10				
180 M/L	2 … 8	6310 ZC3 [5]	6210 ZC3 [5]	**Fig. 4**
200 L	2 … 8	6312 ZC3 [5]	6212 ZC3 [5]	**Fig. 4**

[1] For special uses and special greases, please inquire about grease lifetime and regreasing intervals.

[2] For every 10 K the coolant temperature is increased above 80 °C, the grease lifetime and regreasing interval are halved.

[3] 40 000 hours apply to horizontally installed motors with coupling output without additional axial loads.

[4] Deep-groove bearings with a side plate are used for regreasable versions (**L23**).

[5] Deep-groove bearings without a side plate are used for regreasable versions (**L23**).

© Siemens AG 2018

Overview (continued)

Bearing selection table for 1LE10, 1MB10, and 1PC10 motors – bearings reinforced at both ends – order code L25

Please inquire about noise and vibration data. The bearing selection tables are only intended for planning purposes. Authoritative information on the actual type of bearings fitted in motors already supplied can be obtained by the factory by quoting the serial number or can be read from the rating plate.
When deep-groove bearings with side plates are used, the side plate is on the inside.

Frame size	No. of poles	Drive end (DE) bearing Horizontal and vertical types of construction	Non-drive end (NDE) bearing Horizontal and vertical types of construction	Fig. No. on page 1/65
1LE10/1MB10				
80	2 … 8	6304 2ZC3	6204 2ZC3	–
90	2 … 8	6305 2ZC3	6205 2ZC3	–
1LE10/1MB10/1PC10				
100 L	2 … 8	6306 2ZC3	6306 2ZC3	**Fig. 1**
112 M	2 … 8	6306 2ZC3	6306 2ZC3	
132 S/M	2 … 8	6308 2ZC3 [1]	6308 2ZC3 [1]	
160 M/L	2 … 8	6309 2ZC3 [1]	6309 2ZC3 [1]	**Fig. 2**
1LE10				
180 M/L	2 … 8	6310 ZC3 [2]	6310 ZC3 [2]	**Fig. 4**
200 L	2 … 8	6312 ZC3 [2]	6312 ZC3 [2]	**Fig. 4**

Bearing assignment for 1LE15/1MB15, 1LE16/1MB16, and 1LE5 motors (basic version)

Frame size	No. of poles	Drive end (DE) bearing Horizontal and vertical type of construction	Non-drive end (NDE) bearing Horizontal and vertical type of construction	Fig. No. on page 1/65
1LE15, 1MB15 – Basic Line				
71 M	2 … 8	6202 2ZC3	6202 2ZC3	**Fig. 1**
80 M	2 … 8	6204 2ZC3	6204 2ZC3	**Fig. 1**
90 S/L	2 … 8	6205 2ZC3	6204 2ZC3	**Fig. 1**
100 L	2 … 8	6206 2ZC3 [1]	6206 2ZC3 [1]	**Fig. 1**
112 M	2 … 8	6206 2ZC3 [1]	6206 2ZC3 [1]	
132 S/M	2 … 8	6208 2ZC3 [1]	6208 2ZC3 [1]	
160 M/L	2 … 8	6209 2ZC3 [1]	6209 2ZC3 [1]	**Fig. 2**
180 M/L	2 … 8	6210 ZC3 [2]	6210 ZC3 [2]	**Fig. 4**
200 L	2 … 8	6212 ZC3 [2]	6212 ZC3 [2]	
225 S/M	2 … 8	6213 ZC3 [2]	6213 ZC3 [2]	**Fig. 1**
250 M	2 … 8	6215 ZC3 [2]	6215 ZC3 [2]	
280 S/M	2	6315 C3	6315 C3	**Fig. 2**
	4 … 8	6317 C3	6317 C3	
315 S/M/L	2	6316 C3	6316 C3	
	4 … 8	6319 C3	6319 C3	
1LE16, 1MB16 – Performance Line				
100 L	2 … 8	6306 2ZC3	6306 2ZC3	**Fig. 1**
112 M	2 … 8	6306 2ZC3	6306 2ZC3	
132 S/M	2 … 8	6308 2ZC3	6308 2ZC3	
160 M/L	2 … 8	6309 ZC3	6309 ZC3	**Fig. 2**
180 M/L	2 … 8	6310 C3	6310 C3	**Fig. 4**
200 L	2 … 8	6312 C3	6312 C3	
225 S/M	2 … 8	6313 C3	6313 C3	**Fig. 4**
250 M	2 … 8	6315 C3	6315 C3	
280 S/M	2	6315 C3	6315 C3	
	4 … 8	6317 C3	6317 C3	
315 S/M/L	2	6316 C3	6316 C3	
	4 … 8	6319 C3	6319 C3	

		Type of construction		Type of construction		
		Horizontal	Vertical	Horizontal	Vertical	
1LE5						
315 L	2	6316 C4	6316 C4	6316 C4	7316 B	–
	4, 6	6319 C4	6319 C4	6319 C4	7319 B	–
355 M/L	2	6317 C4	6317 C4	6317 C4	7317 B	–
	4, 6	6320 C4	6320 C4	6320 C4	7320 B	–

[1] Deep-groove bearings with a side plate are used for regreasable versions (**L23**).

[2] Deep-groove bearings without a side plate are used for regreasable versions (**L23**).

© Siemens AG 2018

Overview (continued)

Bearing selection table for 1LE15, 1MB15, 1LE16, and 1MB16 motors (bearings for increased cantilever forces – order code L22)

For NU bearings (cylindrical roller bearings), in contrast to ball bearings, a minimum cantilever force is required. Cylindrical roller bearings are not suitable for coupling output.

$F_{min} \sim F_{max}/2$

Frame size	No. of poles	Drive end (DE) bearing Horizontal and vertical type of construction	Non-drive end (NDE) bearing Horizontal and vertical type of construction	Fig. No. on page 1/65
1LE15/1MB15 – Basic Line				
71 M	2 … 8	6302 2ZC3	6202 2ZC3 3)	
80 M	2 … 8	6304 2ZC3	6204 2ZC3 3)	
90 S/L	2 … 8	6305 2ZC3	6204 2ZC3	
100 L	2 … 8	6306 2ZC3 1)	6206 2ZC3 1)3)	
112 M	2 … 8	6306 2ZC3 1)	6206 2ZC3 1)3)	
132 M	2 … 8	6308 2ZC3 1)	6208 2ZC3 1)3)	
160 M/L	2 … 8	6309 2ZC3 1)	6209 2ZC3 1)3)	
180 M/L	2 … 8	NU 210	6210 C3	**Fig. 5**
200 L	2 … 8	NU 212	6212 C3	
225 M	2 … 8	NU 213	6213 C3	
250 M	2 … 8	NU 215	6215 C3	
280 M	2	NU 315	6315 C3 3)	
	4 … 8	NU 317	6317 C3 3)	
315 M/L	2	NU 316	6316 C3 3)	
	4 … 8	NU 319	6319 C3 3)	
1LE16/1MB16 – Performance Line				
100 L	2 … 8	2)		
112 M	2 … 8	2)		
132 M	2 … 8	2)		
160 M/L	2 … 8	2)		
180 M/L	2 … 8	NU 310	6310 C3 3)	
200 L	2 … 8	NU 312	6312 C3 3)	
225 M	2 … 8	NU 313	6313 C3 3)	**Fig. 5**
250 M	2 … 8	NU 315	6315 C3 3)	
280 M	2	NU 315	6315 C3 3)	
	4 … 8	NU 317	6317 C3 3)	
315 M/L	2	NU 316	6316 C3 3)	
	4 … 8	NU 319	6319 C3 3)	

		Type of construction		Type of construction		
		Horizontal	Vertical	Horizontal	Vertical	
1LE5						
315 L	2	NU316	NU316	6316 C4	O. R.	–
	4, 6	NU319	NU319	6319 C4	O. R.	–
355 M/L	2	NU317	NU317	6317 C4	O. R.	–
	4, 6	NU320	NU320	6320 C4	O. R.	–

© Siemens AG 2018

Overview (continued)

Bearing selection table for 1LE15/1MB15 and 1LE16/1MB16 motors (bearings reinforced at both ends – order code L25, for 1LE16 motors – standard)

Frame size	No. of poles	Drive end (DE) bearing Horizontal and vertical type of construction	Non-drive end (NDE) bearing Horizontal and vertical type of construction	Fig. No. on page 1/65
1LE15, 1MB15 – Basic Line				
71 M	2 … 8	6302 2ZC3	6302 2ZC3	
80 M	2 … 8	6304 2ZC3	6304 2ZC3	
90 S/L	2 … 8	6305 2ZC3	6304 2ZC3	
100 L	2 … 8	6306 2ZC3 [1]	6306 2ZC3 [1]	
112 M	2 … 8	6306 2ZC3 [1]	6306 2ZC3 [1]	
132 M	2 … 8	6308 2ZC3 [1]	6308 2ZC3 [1]	
160 M/L	2 … 8	6309 2ZC3 [1]	6309 2ZC3 [1]	
180 M/L	2 … 8	6310 ZC3 [4]	6310 ZC3 [4]	
200 L	2 … 8	6312 ZC3 [4]	6312 ZC3 [4]	
225 M	2 … 8	6313 ZC3 [4]	6313 ZC3 [4]	**Fig. 4**
250 M	2 … 8	6315 ZC3 [4]	6315 ZC3 [4]	
280 M	2	6315 C3 [3]	6315 C3 [3]	
	4 … 8	6317 C3 [3]	6317 C3 [3]	
315 M/L	2	6316 C3 [3]	6316 C3 [3]	
	4 … 8	6319 C3 [3]	6319 C3 [3]	

		Type of construction		Type of construction		
		Horizontal	Vertical	Horizontal	Vertical	
1LE16, 1MB16 – Performance Line – bearing version Performance Line basic version						
1LE5						
315 L	2	6316 C4	6316 C4	6316 C4	7316 B	–
	4, 6	6319 C4	6319 C4	6319 C4	7319 B	–
355 M/L	2	6317 C4	6317 C4	6317 C4	7317 B	–
	4, 6	6320 C4	6320 C4	6320 C4	7320 B	–

[1] Deep-groove bearings with a side plate are used for regreasable versions (**L23**).

[2] Not permitted.

[3] As for basic version.

[4] Deep-groove bearings without a side plate are used for regreasable versions (**L23**).

© Siemens AG 2018

Overview (continued)

Diagrams of bearings

Fig. 1 Drive-end bearing / Non-drive end bearing

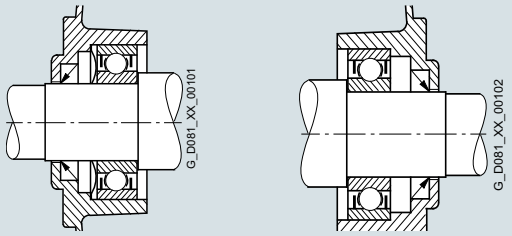

Fig. 2 Drive-end bearing / Non-drive end bearing
Located bearings for 1LE1 and 1MB1 frame size 160

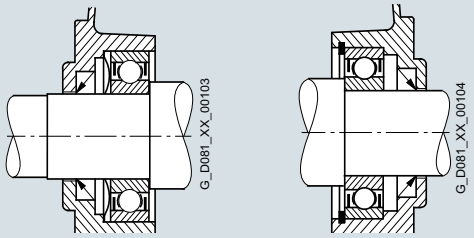

Fig. 3 Drive-end bearing / Non-drive end bearing

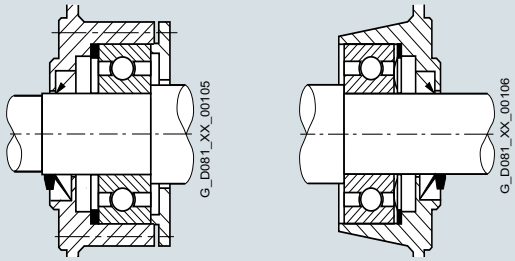

Fig. 4 Drive-end bearing / Non-drive end bearing

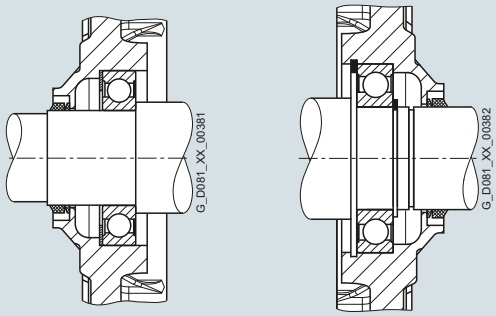

Fig. 5 Drive-end bearing / Non-drive end bearing

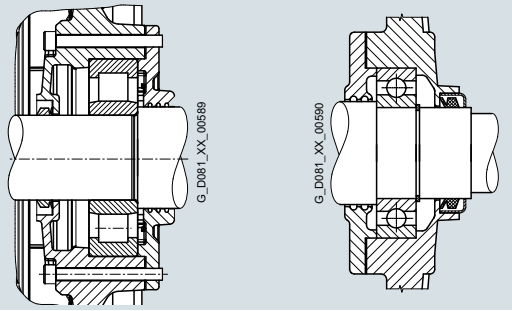

Admissible cantilever forces

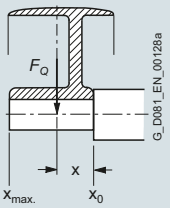

In order to calculate the admissible cantilever forces for a radial load, the line of force (i.e. the centerline of the pulley) of the cantilever force F_Q (N) must be within the free shaft extension (dimension x).

Dimension x (mm) is the distance between the point of application of the force F_Q and the shaft shoulder. The dimension x_{max} corresponds to the length of the shaft extension.

Total cantilever force $F_Q = c \cdot F_u$

The pre-tension factor c is a value gained from experience from the belt manufacturer. The following approximate value can be assumed:

For normal flat leather belts with an idler pulley c = 2;
for V-belts c = 2 to 2.5;
for special synthetic belts (depending on the type of load and type of belt) c = 2 to 2.5.

The circumferential force F_u (N) is calculated using the following equation

$$F_u = 2 \cdot 10^7 \frac{P}{n \cdot D}$$

F_u circumferential force in N
P rated motor power (transmitted power) in kW
n rated motor speed in rpm
D belt pulley diameter in mm

© Siemens AG 2018

Overview (continued)

Admissible cantilever forces – basic version

1LE10, 1MB10 motors (frame sizes 80 ... 160) and 1PC10 (frame sizes 100 ... 160) at 50 Hz

Valid are: x_0 values for x = 0 and $x_{max.}$ values for x = l (l = shaft extension)

For motors			Admissible cantilever force F_Q at x_0	at $x_{max.}$
Frame size	Type	No. of poles	N	N
1LE1 motors – values for IE2 motors with increased power [1]				
80	**1LE1001-0DA**	2	485	400
	1LE1001-0DB	4	625	515
	1LE1001-0DC	6	735	605
90	**1LE1001-0EA**	2	725	605
	1LE1001-0EB	4	920	775
	1LE1001-0EC	6	1090	910
100	**1LE1001-1AA**	2	1010	825
	1LE1001-1AB	4	1230	1010
	1LE1001-1AC	6	1440	1180
112	**1LE1001-1BA**	2	970	785
	1LE1001-1BB	4	1235	1000
	1LE1001-1BC	6	1440	1165
132	**1LE1001-1CA**	2	1470	1180
	1LE1001-1CB	4	1830	1470
	1LE1001-1CC	6	2150	1730
160	**1LE1001-1DA**	2	1550	1270
	1LE1001-1DB	4	1910	1550
	1LE1001-1DC	6	2230	1810
1LE1 motors – standard values for IE2 motors [1] 1MB1 motors – standard values for IE2 motors [1] 1PC1 motors – standard values for IE2 motors [1]				
63	**1LE1001-0BA**	2	270	240
	1LE1001-0BB	4	350	305
71	**1LE1001-0CA**	2	415	355
	1LE1001-0CB	4	530	450
80	**1LE1001-0DA 1MB10.1-0DA 1PC1001-0DA**	2	485	400
	1LE1001-0DB 1MB10.1-0DB 1PC1001-0DB	4	625	515
	1LE1001-0DC 1MB10.1-0DC 1PC1001-0DC	6	735	605
	1LE1001-0DD 1PC1001-0DD	8	815	675
90	**1LE1001-0EA 1MB10.1-0EA 1PC1001-0EA**	2	725	605
	1LE1001-0EB 1MB10.1-0EB 1PC1001-0EB	4	920	775
	1LE1001-0EC 1MB10.1-0EC 1PC1001-0EC	6	1090	910
	1LE1001-0ED 1PC1001-0ED	8	1230	1030

1LE10, 1MB10 motors (frame sizes 80 ... 160) and 1PC10 (frame sizes 100 ... 160) at 50 Hz

Valid are: x_0 values for x = 0 and $x_{max.}$ values for x = l (l = shaft extension)

For motors			Admissible cantilever force F_Q at x_0	at $x_{max.}$
Frame size	Type	No. of poles	N	N
1LE1 motors – standard values for IE2 motors [1] 1MB1 motors – standard values for IE2 motors [1] 1PC1 motors – standard values for IE2 motors [1]				
100	**1LE1001-1AA 1MB10.1-1AA 1PC1001-1AA**	2	1020	815
	1LE1001-1AB 1MB10.1-1AB 1PC1001-1AB	4	1250	1000
	1LE1001-1AC 1MB10.1-1AC 1PC1001-1AC	6	1450	1155
	1LE1001-1AD 1MB10.1-1AD 1PC1001-1AD	8	1615	1290
112	**1LE1001-1BA 1MB10.1-1BA 1PC1001-1BA**	2	1000	790
	1LE1001-1BB 1MB10.1-1BB 1PC1001-1BB	4	1250	990
	1LE1001-1BC 1MB10.1-1BC 1PC1001-1BC	6	1450	1150
	1LE1001-1BD 1MB10.1-1BD 1PC1001-1BD	8	1610	1275
132	**1LE1001-1CA 1MB10.1-1CA 1PC1001-1CA**	2	1505	1170
	1LE1001-1CB 1MB10.1-1CB 1PC1001-1CB	4	1880	1460
	1LE1001-1CC 1MB10.1-1CC 1PC1001-1CC	6	2170	1680
	1LE1001-1CD 1MB10.1-1CD 1PC1001-1CD	8	2420	1880
160	**1LE1001-1DA 1MB10.1-1DA 1PC1001-1DA**	2	1560	1240
	1LE1001-1DB 1MB10.1-1DB 1PC1001-1DB	4	2040	1590
	1LE1001-1DC 1MB10.1-1DC 1PC1001-1DC	6	2350	1820
	1LE1001-1DD 1MB10.1-1DD 1PC1001-1DD	8	2610	2030
180	**1LE10..**	2 4 6	1670 2150 2500	1380 1740 2000
200	**1LE10..**	2 4 6	2460 3180 3600	2070 2630 2980

In the case of cantilever forces that exceed this, see "Bearings for increased cantilever forces".

Note:

1PC10 only for frame sizes 100 to 160.

[1] For IE1 motors, the admissible cantilever force can be increased by up to 5 %.

© Siemens AG 2018

Overview (continued)

1LE15, 1LE55 and 1MB15 motors at 50 Hz

Valid are: x_0 values for x = 0 and x_{max} values for x = l (l = shaft extension)

For motors		Admissible cantilever force at x_0	at x_{max}
Frame size	No. of poles	N	N
1LE1501/03/21/23, 1MB15 – Basic Line			
71	2	400	340
	4	500	420
	6	570	490
80	2	680	570
	4	860	720
	6	980	820
90	2	760	620
	4	950	790
	6	1090	900
100	2	1010	815
	4	1230	1000
	6	1440	1155
	8	1615	1290
112	2	970	785
	4	1235	990
	6	1440	1150
	8	1610	1275
132	2	1470	1170
	4	1830	1460
	6	2150	1680
	8	2420	1880
160	2	1550	1240
	4	1910	1550
	6	2230	1810
	8	2610	2030
180	2	1670	1380
	4	2150	1740
	6	2500	2000
200	2	2460	2070
	4	3180	2630
	6	3600	2980
225	2	2850	2300
	4	3550	2800
	6	4050	3240
	8	4500	3500
250	2	3250	2600
	4	4100	3400
	6	4800	4000
	8	5250	4450
280	2	5200	4200
	4	8500	7000
	6	9800	8150
	8	10800	9000
315 S/M	2	5300	4500
	4	9150	7400
	6	10750	8750
	8	11600	9600
315 L	2	4900	4300
	4	8900	7700
	6	10100	9150
	8	11100	10200
1LE5504/34/03/33 – Basic Line			
315 L	2	5800	5200
	4	9300	8000
	6	10600	9200
	8	12000	9200

1LE16, 1LE56 and 1MB16 motors at 50 Hz

Valid are: x_0 values for x = 0 and x_{max} values for x = l (l = shaft extension)

For motors		Admissible cantilever force at x_0	at x_{max}
Frame size	No. of poles	N	N
1LE1601/03/21/23, 1MB16 – Performance Line			
100	2	1585	1270
	4	1960	1575
	6	2270	1815
	8	2520	2015
112	2	1545	1240
	4	1960	1555
	6	2270	1800
	8	2510	1990
132	2	2285	1795
	4	2860	2250
	6	3320	2580
	8	3700	2870
160	2	2800	2170
	4	3450	2750
	6	4000	3160
	8	4510	3500
180	2	3250	2610
	4	4110	3270
	6	4720	3740
200	2	4320	3550
	4	5480	4500
	6	6220	5110
225	2	5000	4150
	4	6250	4900
	6	7200	5750
	8	7800	6200
250	2	6000	4800
	4	7600	6200
	6	8750	7350
	8	9500	8000
280	2	5200	4200
	4	8500	7000
	6	9800	8150
	8	10800	9000
315 S/M	2	5300	4500
	4	9150	7400
	6	10750	8750
	8	11600	9600
315 L	2	4900	4300
	4	8900	7700
	6	10100	9150
	8	11100	10200
1LE5604/34/03/33 – Performance Line			
315 L	2	5800	5200
	4	9300	8000
	6	10600	9200
	8	12000	9200
355 M,L	2	5800	5200
	4	9900	8700
	6	11200	9800
	8	11200	10000

In the case of cantilever forces that exceed this, see "Bearings for increased cantilever forces".

© Siemens AG 2018

Overview (continued)

Admissible cantilever forces – bearings for increased cantilever forces – order code **L22**

1LE10, 1MB10 motors (frame sizes 80 ... 160) and 1PC10 (frame sizes 100 ... 160) at 50 Hz with reinforced deep-groove bearings at DE

Valid are: x_o values for x = 0 and x_{max} values for x = l (l = shaft extension)

For motors			Admissible cantilever force F_Q at x_0	at x_{max}
Frame size	Type	No. of poles	N	N
1LE1 motors – values for IE2 motors with increased power [1]				
100	**1LE1001-1AA**	2	1585	1300
	1LE1001-1AB	4	1960	1610
	1LE1001-1AC	6	2270	1865
112	**1LE1001-1BA**	2	1545	1250
	1LE1001-1BB	4	1960	1585
	1LE1001-1BC	6	2270	1835
132	**1LE1001-1CA**	2	2285	1840
	1LE1001-1CB	4	2860	2300
	1LE1001-1CC	6	3320	2670
160	**1LE1001-1DA**	2	2800	2240
	1LE1001-1DB	4	3450	2270
	1LE1001-1DC	6	4000	3200
1LE1 motors – standard values for IE2 motors [1] **1MB1 motors – standard values for IE2 motors** [1] **1PC1 motors – standard values for IE2 motors** [1]				
100	**1LE1001-1AA** **1MB10.1-1AA** **1PC1001-1AA**	2	1585	1270
	1LE1001-1AB **1MB10.1-1AB** **1PC1001-1AB**	4	1960	1575
	1LE1001-1AC **1MB10.1-1AC** **1PC1001-1AC**	6	2270	1815
	1LE1001-1AD **1MB10.1-1AD** **1PC1001-1AD**	8	2520	2015
112	**1LE1001-1BA** **1MB10.1-1BA** **1PC1001-1BA**	2	1545	1240
	1LE1001-1BB **1MB10.1-1BB** **1PC1001-1BB**	4	1960	1555
	1LE1001-1BC **1MB10.1-1BC** **1PC1001-1BC**	6	2270	1800
	1LE1001-1BD **1MB10.1-1BD** **1PC1001-1BD**	8	2510	1990
132	**1LE1001-1CA** **1MB10.1-1CA** **1PC1001-1CA**	2	2285	1795
	1LE1001-1CB **1MB10.1-1CB** **1PC1001-1CB**	4	2860	2250
	1LE1001-1CC **1MB10.1-1CC** **1PC1001-1CC**	6	3320	2580
	1LE1001-1CD **1MB10.1-1CD** **1PC1001-1CD**	8	3700	2870
160	**1LE1001-1DA** **1MB10.1-1DA** **1PC1001-1DA**	2	2800	2170
	1LE1001-1DB **1MB10.1-1DB** **1PC1001-1DB**	4	3450	2750
	1LE1001-1DC **1MB10.1-1DC** **1PC1001-1DC**	6	4000	3160
	1LE1001-1DD **1MB10.1-1DD** **1PC1001-1DD**	8	4510	3500
180	**1LE1001-1EA**	2	3250	2610
		4	4110	3270
		6	4720	3740
		8	5130	4050
200	**1LE1001-2AA**	2	4320	3550
		4	5480	4500
		6	6220	5110
		8	6870	5640

[1] For IE1 motors, the admissible cantilever force can be increased by up to 5%.

1LE15 and 1MB15 motors at 50 Hz with reinforced deep-groove bearings at DE up to frame size 160 with cylindrical roller bearings at DE in frame size 180 and above

Valid are: x_0 values for x = 0 and x_{max} values for x = l (l = shaft extension)

For motors			Admissible cantilever force at x_0	at x_{max}
Frame size	Type	No. of poles	N	N
1LE1501/03/21/23, 1MB15 – Basic Line				
71	**1LE15..-0CA** **1MB15..-0CA**	2	400	340
	1LE15..-0CB **1MB15..-0CB**	4	490	420
	1LE15..-0CC **1MB15..-0CC**	6	570	490
	LE15..-0CD **1MB15..-0CD**	8	640	540
80	**1LE15..-0DA** **1MB15..-0DA**	2	680	570
	1LE15..-0DB **1MB15..-0DB**	4	840	720
	1LE15..-0DC **1MB15..-0DC**	6	970	820
	1LE15..-0DD **1MB15..-0DD**	8	1090	910
90	**1LE15..-0EA** **1MB15..-0EA**	2	720	605
	1LE15..-0EB **1MB15..-0EB**	4	920	775
	1LE15..-0EC **1MB15..-0EC**	6	1060	910
	1LE15..-0ED **1MB15..-0ED**	8	1200	1030
100	**1LE15..-1AA** **1MB15..-1AA**	2	1585	1270
	1LE15..-1AB **1MB15..-1AB**	4	1960	1575
	1LE15..-1AC **1MB15..-1AC**	6	2270	1815
	1LE15..-1AD **1MB15..-1AD**	8	2520	2015
112	**1LE15..-1BA** **1MB15..-1BA**	2	1545	1240
	1LE15..-1BB **1MB15..-1BB**	4	1960	1555
	1LE15..-1BC **1MB15..-1BC**	6	2270	1800
	1LE15..-1BD **1MB15..-1BD**	8	2510	1990
132	**1LE15..-1CA** **1MB15..-1CA**	2	2285	1795
	1LE15..-1CB **1MB15..-1CB**	4	2860	2250
	1LE15..-1CC **1MB15..-1CC**	6	3320	2580
	1LE15..-1CD **1MB15..-1CD**	8	3700	2870
160	**1LE15..-1DA** **1MB15..-1DA**	2	2800	2170
	1LE15..-1DB **1MB15..-1DB**	4	3450	2750
	1LE15..-1DC **1MB15..-1DC**	6	4000	3160
	1LE15..-1DD **1MB15..-1DD**	8	4510	3500
180	**1LE15..-1EA** **1MB15..-1EA**	2	4520	3630
	1LE15..-1EB **1MB15..-1EB**	4	5560	4050
	1LE15..-1EC **1MB15..-1EC**	6	6280	4050
	1LE15..-1ED **1MB15..-1ED**	8	6790	4050
200	**1LE15..-2AA** **1MB15..-2AA**	2	6840	5610
	1LE15..-2AB **1MB15..-2AB**	4	8440	6000
	1LE15..-2AC **1MB15..-2AC**	6	9480	6000
	1LE15..-2AD **1MB15..-2AD**	8	10100	6000

Note:
1PC10 and 1MB10 not for frame sizes 180 to 200.

© Siemens AG 2018

Overview (continued)

1LE15 and 1MB15 motors at 50 Hz with reinforced deep-groove bearings at DE up to frame size 160 with cylindrical roller bearings at DE in frame size 180 and above

Valid are: x_0 values for x = 0 and x_{max} values for x = l (l = shaft extension)

For motors			Admissible cantilever force at x_0	at x_{max}
Frame size	Type	No. of poles	N	N
1LE1501/03/21/23, 1MB15 – Basic Line (continued)				
225	**1LE15..-2BA** **1MB15..-2BA**	2	8000	6800
	1LE15..-2BB **1MB15..-2BB**	4	9800	7250
	1LE15..-2BC **1MB15..-2BC**	6	11100	7300
	1LE15..-2BD **1MB15..-2BD**	8	11300	7300
250	**1LE15..-2CA** **1MB15..-2CA**	2	9500	7400
	1LE15..-2CB **1MB15..-2CB**	4	12500	9400
	1LE15..-2CC **1MB15..-2CC**	6	13500	9700
	1LE15..-2CD **1MB15..-2CD**	8	14700	9700
280 [1]	**1LE15..-2DA** **1MB15..-2DA**	2	16500	9800
315 [1]	**1LE15..-3AA** **1MB15..-3AA**	2	18400	7600

1LE16 and 1MB16 motors at 50 Hz with reinforced cylindrical roller bearings (DE)

Valid are: x_0 values for x = 0 and x_{max} values for x = l (l = shaft extension)

For motors		Admissible cantilever force at x_0	at x_{max}
Frame size	No. of poles	N	N
1LE1601/03/21/23, 1MB16 – Performance Line			
100, 112, 132, 160	2, 4, 6, 8	–	–
180	2	8150	4050
	4	9800	4050
	6	9800	4050
200	2	11200	6000
	4	13600	6000
	6	13600	6000
225	2	12700	7900
	4	15700	7250
	6	15700	7300
	8	15700	7300
250	2	17000	7750
	4	21000	9400
	6	21000	9700
	8	21000	9700
280 [1]	2	16500	9800
315 S, M [1]	2	18400	7600
315 L [1]	2	18400	7600

1LE15/6 and 1MB15/6 motors for 50 Hz with cylindrical roller bearings (DE) for frame sizes 280 to 315 in 4 to 8-pole version

Frame size 280, 4 to 8-pole

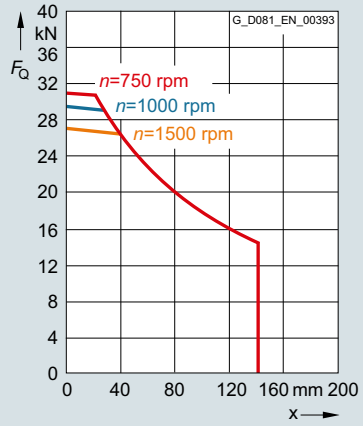

Frame size 315 S/M, 4 to 8-pole

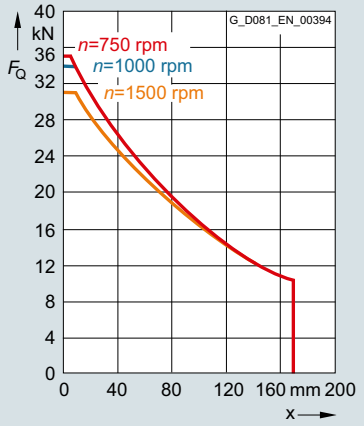

Frame size 315 L, 4 to 8-pole

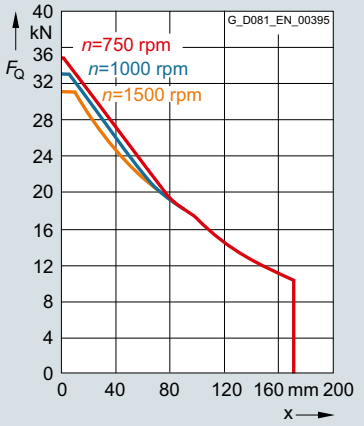

1LE55/6 motors for 50 Hz with cylindrical roller bearings (DE) for frame sizes 315 to 355 in 2 to 8-pole version

1LE55/6 motors of frame size 315, 2 to 8-pole

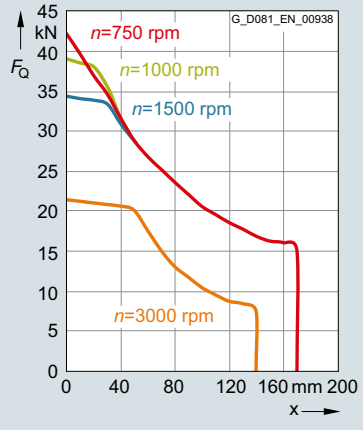

1LE56 motors of frame size 355, 2 to 8-pole

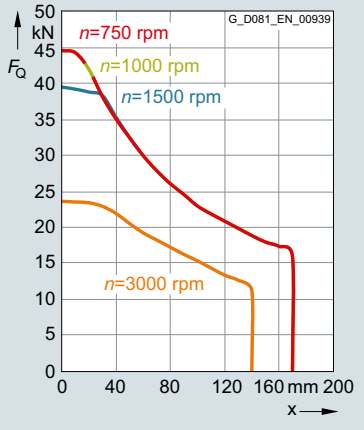

[1] For admissible cantilever forces 4, 6, and 8-pole versions, see diagrams on this page.

© Siemens AG 2018

Overview (continued)

Admissible cantilever forces – bearings reinforced at both ends – order code **L25**

1LE10, 1MB10 motors (frame sizes 80 ... 160) and 1PC10 (frame sizes 100 ... 160) for 50 Hz with deep-groove bearings reinforced at both ends

Valid are: x_0 values for x = 0 and x_{max} values for x = l (l = shaft extension)

For motors		Admissible cantilever force at x_0	at x_{max}
Frame size	No. of poles	N	N
1LE1501/03/21/23, 1MB15 – Basic Line 1LE10, 1MB10, 1PC10			
71	2	610	510
	4	760	640
	6	880	740
	8	970	820
80	2	950	800
	4	1190	1000
	6	1370	1150
	8	1520	1270
90	2	1200	1000
	4	1530	1270
	6	1760	1450
	8	1950	1610
100	2	1585	1270
	4	1960	1575
	6	2270	1815
	8	2520	2015
112	2	1545	1240
	4	1960	1555
	6	2270	1800
	8	2510	1990
132	2	2285	1795
	4	2860	2250
	6	3320	2580
	8	3700	2870
160	2	2800	2170
	4	3450	2750
	6	4000	3160
	8	4510	3500
180	2	3250	2610
	4	4110	3270
	6	4720	3740
	8	5130	4050
200	2	4320	3550
	4	5480	4500
	6	6220	5110
	8	6870	5640
225	2	5000	4150
	4	6250	4900
	6	7200	5750
	8	7800	6200
250	2	6000	4800
	4	7600	6200
	6	8750	7350
	8	9500	8000
280 [1)]	2, 4, 6, 8	–	–
315	2, 4, 6, 8	–	–

Note:

1PC10 only for frame sizes 100 to 160.

Admissible cantilever forces – bearings reinforced at both ends. DE bearings for increased cantilever forces – order code **L28**

1LE15 and 1MB15 motors for 50 Hz with cylindrical roller bearings (DE) with deep-groove bearings (NDE)

Valid are: x_0 values for x = 0 and x_{max} values for x = l (l = shaft extension)

For motors		Admissible cantilever force at x_0	at x_{max}
Frame size	No. of poles	N	N
1LE1501/03/21/23, 1MB15 – Basic Line			
100	2, 4, 6, 8	–	–
112	2, 4, 6, 8	–	–
132	2, 4, 6, 8	–	–
160	2, 4, 6, 8	–	–
180	2	8150	4050
	4	9800	4050
	6	9800	4050
200	2	11200	6000
	4	13600	6000
	6	13600	6000
225	2	12700	7900
	4	15700	7250
	6	15700	7300
	8	15700	7300
250	2	17000	7750
	4	21000	9400
	6	21000	9700
	8	21000	9700
280	2, 4, 6, 8	–	–
315 S, M	2, 4, 6, 8	–	–
315 L	2, 4, 6, 8	–	–

[1)] For values for frame sizes 280 to 315, see page 1/67.
For frame sizes 280 to 315, bearings of size 63 are standard.

© Siemens AG 2018

Overview (continued)

Admissible axial load

1LE10, 1MB10, and 1PC10 motors in vertical type of construction – basic version (with the exception of motors with increased power)

Frame size	3000 rpm				1500 rpm				1000 rpm				750 rpm			
	Shaft extension pointing down		**up**		**down**		**up**		**down**		**up**		**down**		**up**	
	Load down	up	down	up	down	up	down	up	down	up	down	up	down	up	down	up
	N	N	N	N	N	N	N	N	N	N	N	N	N	N	N	N
63	80	245	230	95	80	330	310	95	80	410	390	95	–	–	–	–
71	105	365	335	130	90	380	440	130	90	590	550	130	90	700	660	130
80	110	425	360	160	100	540	480	165	100	650	590	165	100	760	700	165
90	110	440	360	180	100	680	580	190	100	920	820	190	100	1150	1050	190
100	140	700	550	280	130	990	820	285	130	1280	1110	285	130	1560	1390	285
112	140	710	550	300	130	1000	820	310	130	1290	1110	310	130	1570	1390	310
132	200	1200	950	470	180	1680	1200	470	180	1900	1600	470	190	2200	1900	440
160	1500	1400	950	1900	1900	1800	1300	2200	2200	2200	1600	2700	2700	2700	1950	2900
180	1260	1230	500	1990	1600	1770	840	2530	1920	2150	1160	2900	2050	2500	1290	3260
200	1810	1720	660	2870	2410	2480	1260	3630	2700	3050	1550	4200	3060	3510	1910	4660

The values shown do not assume a cantilever force on the shaft extension.
The admissible loads are valid for operation at 50 Hz; for 60 Hz, please inquire.

The calculation of the admissible axial load was based on the drive with generally available coupling. For suppliers, see section "Accessories" on page 2/117 in the respective section of the catalog.
Please inquire if the load direction alternates.

1LE10, 1MB10, [1] and 1PC10 [1] motors in horizontal type of construction – basic version (with the exception of motors with increased power)

Frame size	3000 rpm				1500 rpm				1000 rpm				750 rpm			
	Tensile load	Thrust load (N)			Tensile load	Thrust load (N)			Tensile load	Thrust load (N)			Tensile load	Thrust load (N)		
		with radial load at		without radial load		with radial load at		without radial load		with radial load at		without radial load		with radial load at		without radial load
		x_0	$x_{max.}$			x_0	$x_{max.}$			x_0	$x_{max.}$			x_0	$x_{max.}$	
	N	N	N	N	N	N	N	N	N	N	N	N	N	N	N	N
63	90	120	90	240	90	140	110	320	90	170	120	400	–	–	–	–
71	120	150	120	350	120	210	150	460	120	260	180	570	120	300	210	680
80	140	190	150	400	140	300	260	510	140	330	280	620	140	340	290	730
90	150	300	280	400	150	400	360	630	150	480	430	870	150	550	500	1100
100	220	450	350	630	220	600	500	910	220	650	550	1200	220	750	650	1480
112	220	450	350	630	220	600	500	910	220	650	550	1200	220	750	650	1480
132	350	650	520	1200	350	850	700	1600	350	1020	890	1900	350	1150	1020	2200
160	1500	850	720	1500	1500	1050	920	1800	1500	1250	1120	2200	1500	1350	1220	2600
180	1630	–	–	870	2070	–	–	1310	2420	–	–	1660	2660	–	–	1900
200	2340	–	–	1190	3020	–	–	1870	3450	–	–	2300	3860	–	–	2710

The values shown do not assume a cantilever force on the shaft extension.
The admissible loads are valid for operation at 50 Hz; for 60 Hz, please inquire.

The calculation of the admissible axial load was based on the drive with generally available coupling. For suppliers, see the section "Accessories" on page 2/117.
Please inquire if the load direction alternates.

[1] 1MB10 and 1PC10 motors only available for frame sizes 100 to 160.

© Siemens AG 2018

Overview (continued)

1LE15, 1MB15, 1LE16, 1MB16, 1LE55, and 1LE56 motors in vertical type of construction – basic version

Frame size	Type	2-pole – 3000 rpm				4-pole – 1500 rpm				6-pole – 1000 rpm				8-pole – 750 rpm			
		Shaft extension pointing down		**up**		**down**		**up**		**down**		**up**		**down**		**up**	
		Load down	up	down	up	down	up	down	up	down	up	down	up	down	up	down	up
		N	N	N	N	N	N	N	N	N	N	N	N	N	N	N	N
1LE15, 1MB15 – Basic Line																	
71	**1..1501-0C.2**	220	100	80	240	210	220	180	240	210	300	260	250	–	–	–	–
	1..1501-0C.3	220	90	70	240	210	210	170	250	210	300	260	250	–	–	–	–
	1..1503-0C.2	220	90	70	240	210	210	170	250	210	300	260	250	–	–	–	–
	1..1503-0C.3	210	100	60	250	200	200	150	260	200	290	230	260	–	–	–	–
80	**1..1501-0D.2**	240	280	240	280	230	460	400	290	230	600	540	290	–	–	–	–
	1..1501-0D.3	230	270	220	280	230	450	390	290	220	590	510	300	–	–	–	–
	1..1503-0D.2	230	270	220	280	230	450	390	290	220	590	510	300	–	–	–	–
	1..1503-0D.3	230	270	210	290	220	440	360	300	210	590	490	300	–	–	–	–
90	**1..1501-0E.0**	210	300	230	280	210	480	400	290	210	620	540	290	–	–	–	–
	1..1501-0E.4	210	300	220	290	200	480	380	300	200	620	520	300	–	–	–	–
	1..1503-0E.0	210	300	220	290	200	480	380	300	200	620	520	300	–	–	–	–
	1..1503-0E.4	210	290	210	290	200	460	360	300	200	610	510	300	–	–	–	–
100	**1..15.1-1A.4**	300	450	340	410	280	720	570	430	260	930	740	450	280	1100	940	440
	1..15.1-1A.5	–	–	–	–	270	710	540	440	–	–	–	–	260	1100	910	450
	1..15.1-1A.6	290	440	310	420	250	710	500	460	240	920	690	470	–	–	–	–
	1..15.3-1A.4	290	440	310	420	250	710	500	460	–	–	–	–	–	–	–	–
	1..15.3-1AB5	–	–	–	–	250	710	500	460	–	–	–	–	–	–	–	–
112	**1..15.1-1B.2**	280	460	310	430	260	730	540	450	250	940	730	460	250	1110	900	460
	1..15.1-1B.6	260	460	270	450	250	730	510	470	240	930	700	470	–	–	–	–
	1..15.3-1B.2	260	460	270	450	250	730	510	470	240	930	700	470	–	–	–	–
132	**1..15.1-1C.0**	510	600	370	740	490	1000	730	760	490	1310	1040	760	480	1570	1280	770
	1..15.1-1C.1	490	610	340	760	–	–	–	–	–	–	–	–	–	–	–	–
	1..15.1-1C.2	–	–	–	–	460	1000	670	790	470	1310	1000	780	450	1580	1220	810
	1..15.1-1C.3	–	–	–	–	–	–	–	–	440	1310	940	810	–	–	–	–
	1..15.1-1C.6	450	610	260	800	410	1010	580	840	390	1320	850	860	–	–	–	–
	1..15.3-1C.0	490	610	340	760	410	1010	580	840	440	1310	940	810	–	–	–	–
	1..15.3-1C.1	450	610	260	800	–	–	–	–	–	–	–	–	–	–	–	–
	1..15.3-1C.2	–	–	–	–	410	1010	580	840	440	1310	940	810	–	–	–	–
	1..15.3-1C.3	–	–	–	–	–	–	–	–	400	1320	850	860	–	–	–	–
160	**1..15.1-1D.2**	1560	890	500	1950	1930	1340	870	2400	2190	1700	1130	2760	2540	1990	1480	3050
	1..15.1-1D.3	1510	900	450	1960	–	–	–	–	–	–	–	–	2430	1980	1370	3040
	1..15.1-1D.4	1470	900	410	1960	1840	1350	780	2410	2070	1710	1010	2770	2350	2000	1290	3060
	1..15.1-1D.6	1370	900	310	1960	1760	1380	700	2440	1930	1720	870	2780	–	–	–	–
	1..15.1-1D.7	–	–	–	–	1640	1400	580	2460	–	–	–	–	–	–	–	–
	1..15.3-1D.2	1510	900	450	1960	1840	1350	780	2410	2070	1710	1010	2770	–	–	–	–
	1..15.3-1D.3	1470	900	410	1960	–	–	–	–	–	–	–	–	–	–	–	–
	1..15.3-1D.4	1370	900	310	1960	1760	1380	700	2440	1930	1720	870	2780	–	–	–	–
180	**1..15..-1E.2**	1290	1220	530	1980	1680	1750	920	2500	–	–	–	–	–	–	–	–
	1..15..-1E.4	–	–	–	–	1610	1760	850	2520	1920	2120	1160	2880	2270	2440	1510	3200
	1..15..-1E.6	1260	1230	500	1990	1600	1770	840	2530	1920	2150	1160	2900	2050	2500	1290	3260
200	**1..15..-2A.4**	1920	1680	760	2830	–	–	–	–	2880	2970	1720	4120	–	–	–	–
	1..15..-2A.5	1810	1700	660	2860	2410	2450	1260	3600	2770	3010	1620	4160	3240	3450	2090	4600
	1..15..-2A.6	1810	1720	660	2870	2410	2480	1260	3630	2700	3050	1550	4200	3060	3510	1910	4660
225	**1..15..-2B.0**	–	–	–	–	2200	2800	1180	3830	–	–	–	–	3200	3750	2180	4770
	1..15..-2B.2	1720	2000	630	3020	2100	2850	1070	3900	2340	3470	1300	4480	3090	3800	2070	4820
	1..15..-2B.6	1720	2000	630	3020	2100	2850	1070	3900	2300	3500	1280	4480	2780	3950	1770	4970
250	**1..15..-2C.2**	1630	2600	830	3400	1980	3580	1180	4390	2440	4210	1650	5020	3180	4760	2380	5560
	1..15..-2C.6	1630	2650	830	3450	1940	3740	1140	4530	2440	4320	1640	5120	2950	4850	2150	5650
280	**1..15..-2D.0**	3540	4280	1950	5850	5320	6930	3640	8500	6630	7990	5000	9570	7930	9030	6200	10500
	1..15..-2D.2	3250	4390	1650	5950	4790	6990	3170	8580	6350	8150	4700	9700	7690	9180	6000	10600
	1..15..-2D.6	3180	4540	1580	6100	4770	7170	3150	8750	6230	8400	4600	9900	7370	9300	5700	10700
315	**1..15..-3A.0**	3580	4710	1450	6850	5640	7790	3600	9850	6800	9100	4700	11100	8500	10150	6450	11800
	1..15..-3A.2	3180	4960	1050	7100	4780	7920	2700	9900	6080	9300	4000	11300	8150	10400	6100	11900
	1..15..-3A.4	2890	5080	770	7200	4820	7580	2750	9600	5400	9750	3350	11700	7250	10650	5200	12000
	1..15..-3A.5	2240	5480	100	7600	3720	7620	1650	9650	4800	10150	2750	11800	6500	10900	4450	12300
	1..15..-3A.6	–	–	–	–	–	–	–	–	4550	10000	2500	11800	5900	11000	3900	12500
1LE5 – Basic Line																	
315	**1LE55..-3A.6**	12500	–	10100	622	19100	2293	16700	4633	22000	19600	3014	5354	–	–	–	–
	1LE55..-3A.7	12000	–	9600	622	19000	2353	16600	4693	21000	18600	4054	6394	–	–	–	–

© Siemens AG 2018

Overview (continued)

Frame size	Type	2-pole – 3000 rpm				4-pole – 1500 rpm				6-pole – 1000 rpm				8-pole – 750 rpm			
		Shaft extension pointing down		**up**		**down**		**up**		**down**		**up**		**down**		**up**	
		Load down N	up N	down N	up N	down N	up N	down N	up N	down N	up N	down N	up N	down N	up N	down N	up N
1LE16, 1MB16 – Performance Line																	
100	**1..16.1-1A.4**	220	930	820	330	200	1330	1180	350	180	1640	1450	370	200	1900	1740	360
	1..16.1-1A.5	–	–	–	–	190	1320	1150	360	–	–	–	–	–	–	–	–
	1..16.1-1A.6	210	930	800	340	170	1320	1110	380	160	1640	1410	390	180	1900	1710	370
	1..16.3-1A.4	210	930	800	340	170	1320	1110	380	–	–	–	–	–	–	–	–
	1..16.3-1A.5	–	–	–	–	170	1320	1110	380	–	–	–	–	–	–	–	–
112	**1..16.1-1B.2**	200	940	790	350	180	1340	1150	370	170	1650	1440	380	–	–	–	–
	1..16.1-1B.6	180	940	750	370	170	1340	1120	390	160	1640	1410	390	170	1910	1700	380
	1..16.3-1B.2	180	940	750	370	170	1340	1120	390	160	1640	1410	390	–	–	–	–
132	**1..16.1-1C.0**	540	1120	890	770	520	1700	1430	790	520	2150	1880	790	510	2530	2240	800
	1..16.1-1C.1	520	1130	860	790	–	–	–	–	–	–	–	–	–	–	–	–
	1..16.1-1C.2	–	–	–	–	490	1710	1380	820	500	2150	1840	810	480	2540	2180	840
	1..16.1-1C.3	–	–	–	–	–	–	–	–	470	2150	1780	840	–	–	–	–
	1..16.1-1C.6	480	1130	780	830	440	1710	1280	870	420	2160	1690	890	–	–	–	–
	1..16.3-1C.0	520	1130	860	790	440	1710	1280	870	470	2150	1780	840	–	–	–	–
	1..16.3-1C.1	480	1130	780	830	–	–	–	–	–	–	–	–	–	–	–	–
	1..16.3-1C.2	–	–	–	–	440	1710	1280	870	470	2150	1780	840	–	–	–	–
	1..16.3-1C.3	–	–	–	–	–	–	–	–	420	2160	1690	890	–	–	–	–
160	**1..16.1-1D.2**	2200	1870	1480	2590	2860	2610	2140	3330	3320	3170	2600	3890	3830	3620	3110	4340
	1..16.1-1D.3	2150	1880	1430	2600	–	–	–	–	–	–	–	–	3730	3620	3010	4340
	1..16.1-1D.4	2120	1890	1400	2610	2760	2610	2040	3330	3200	3180	2480	3900	3650	3640	2930	4360
	1..16.1-1D.6	2020	1890	1300	2610	2680	2640	1960	3360	3050	3180	2330	3900	–	–	–	–
	1..16.1-1D.7	–	–	–	–	2570	2670	1850	3390	–	–	–	–	–	–	–	–
	1..16.3-1D.2	2150	1880	1430	2600	2760	2610	2040	3330	3200	3180	2480	3900	–	–	–	–
	1..16.3-1D.3	2120	1890	1400	2610	–	–	–	–	–	–	–	–	–	–	–	–
	1..16.3-1D.4	2020	1890	1300	2610	2680	2640	1960	3360	3050	3180	2330	3900	–	–	–	–
180	**1..16..-1E.2**	2510	2050	1360	3200	3240	2920	2090	4070	–	–	–	–	–	–	–	–
	1..16..-1E.4	–	–	–	–	3180	2930	2020	4090	3740	3560	2580	4710	4300	4090	3150	5240
	1..16..-1E.6	2490	2060	1330	3220	3160	2950	2010	4100	3740	3570	2580	4730	4090	4140	2940	5290
200	**1..16..-2A.4**	2920	3030	2110	3840	–	–	–	–	4570	5010	3760	5820	–	–	–	–
	1..16..-2A.5	2810	3060	2000	3870	3820	4210	3010	5020	4470	5060	3660	5870	5200	5750	4390	6560
	1..16..-2A.6	2810	3060	2000	3870	3820	4230	3010	5040	4400	5090	3590	5900	5010	5800	4200	6610
225	**1..16..-2B.0**	–	–	–	–	4200	4750	3150	5800	–	–	–	–	5900	6400	4850	7650
	1..16..-2B.2	3100	3400	2050	4450	4100	4850	3000	5850	4700	5800	3650	6850	5800	6450	4700	7500
	1..16..-2B.6	3100	3400	2050	4450	4100	4850	3000	5850	4650	5850	3600	6900	5500	6600	4400	7650
250	**1..16..-2C.2**	3850	4100	2250	5600	4850	5650	3250	7250	5750	6750	4200	8350	6900	7700	5300	9200
	1..16..-2C.6	3850	4100	2250	5600	4800	5750	3200	7400	5750	6750	4200	8450	6700	7800	5000	9300
280	**1..16..-2D.0**	3540	4280	1950	5850	5320	6930	3640	8500	6630	7990	5000	9570	7930	9030	6200	10500
	1..16..-2D.2	3250	4390	1650	5950	4790	6990	3170	8580	6350	8150	4700	9700	7690	9180	6000	10600
	1..16..-2D.6	3180	4540	1580	6100	4770	7170	3150	8750	6230	8400	4600	9900	7370	9300	5700	10700
315	**1..16..-3A.0**	3580	4710	1450	6850	5640	7790	3600	9850	6800	9100	4700	11100	8500	10150	6450	11800
	1..16..-3A.2	3180	4960	1050	7100	4780	7920	2700	9900	6080	9300	4000	11300	8150	10400	6100	11900
	1..16..-3A.4	2890	5080	770	7200	4820	7580	2750	9600	5400	9750	3350	11700	7250	10650	5200	12000
	1..16..-3A.5	2240	5480	100	7600	3720	7620	1650	9650	4800	10150	2750	11800	6500	10900	4450	12300
	1..16..-3A.6	–	–	–	–	–	–	–	–	4550	10000	2500	11800	5900	11000	3900	12500
1LE5 – Performance Line																	
315	**1LE56..-3A.6**	12500	–	10100	622	19100	2293	16700	4633	–	–	–	–	–	–	–	–
	1LE56..-3A.7	12000	–	9600	622	19000	2353	16600	4693	–	–	–	–	–	–	–	–
355	**1LE56..-3B.2**	–	–	–	–	–	–	–	–	25500	21700	4791	8591	–	–	–	–
	1LE56..-3B.3	11900	497	10000	2325	24000	2046	20200	5846	25000	21200	5241	9041	–	–	–	–
	1LE56..-3B.4	11500	877	9600	2705	23500	2476	19700	6276	25000	21200	5241	9041	–	–	–	–
	1LE56..-3B.5	11200	1237	9300	3065	22500	3236	18700	7036	–	–	–	–	–	–	–	–

© Siemens AG 2018

Overview (continued)

1LE15 and 1MB15 motors in vertical type of construction – bearings reinforced at both ends – order code **L25**

Frame size	Type	2-pole – 3000 rpm				4-pole – 1500 rpm				6-pole – 1000 rpm				8-pole – 750 rpm			
		Shaft extension pointing down		**up**		**down**		**up**		**down**		**up**		**down**		**up**	
		Load down	up	down	up	down	up	down	up	down	up	down	up	down	up	down	up
		N	N	N	N	N	N	N	N	N	N	N	N	N	N	N	N
1LE15, 1MB15 – Basic Line																	
71/80/90		Available soon															
100	**1..15.1-1A.4**	220	930	820	330	200	1330	1180	350	180	1640	1450	370	200	1900	1740	360
	1..15.1-1A.5	–	–	–	–	190	1320	1150	360	–	–	–	–	180	1900	1710	370
	1..15.1-1A.6	210	930	800	340	170	1320	1110	380	160	1640	1410	390	–	–	–	–
	1..15.3-1A.4	210	930	800	340	170	1320	1110	380	–	–	–	–	–	–	–	–
	1..15.3-1A.5	–	–	–	–	170	1320	1110	380	–	–	–	–	–	–	–	–
112	**1..15.1-1B.2**	200	940	790	350	180	1340	1150	370	170	1650	1440	380	170	1910	1700	380
	1..15.1-1B.6	180	940	750	370	170	1340	1120	390	160	1640	1410	390	–	–	–	–
	1..15.3-1B.2	180	940	750	370	170	1340	1120	390	160	1640	1410	390	–	–	–	–
132	**1..15.1-1C.0**	540	1120	890	770	520	1700	1430	790	520	2150	1880	790	510	2530	2240	800
	1..15.1-1C.1	520	1130	860	790	–	–	–	–	–	–	–	–	–	–	–	–
	1..15.1-1C.2	–	–	–	–	490	1710	1380	820	500	2150	1840	810	480	2540	2180	840
	1..15.1-1C.3	–	–	–	–	–	–	–	–	470	2150	1780	840	–	–	–	–
	1..15.1-1C.6	480	1130	780	830	440	1710	1280	870	420	2160	1690	890	–	–	–	–
	1..15.3-1C.0	520	1130	860	790	440	1710	1280	870	470	2150	1780	840	–	–	–	–
	1..15.3-1C.1	480	1130	780	830	–	–	–	–	–	–	–	–	–	–	–	–
	1..15.3-1C.2	–	–	–	–	440	1710	1280	870	470	2150	1780	840	–	–	–	–
	1..15.3-1C.3	–	–	–	–	–	–	–	–	420	2160	1690	890	–	–	–	–
160	**1..15.1-1D.2**	2200	1870	1480	2590	2860	2610	2140	3330	3320	3170	2600	3890	3830	3620	3110	4340
	1..15.1-1D.3	2150	1880	1430	2600	–	–	–	–	–	–	–	–	3730	3620	3010	4340
	1..15.1-1D.4	2120	1890	1400	2610	2760	2610	2040	3330	3200	3180	2480	3900	3650	3640	2930	4360
	1..15.1-1D.6	2020	1890	1300	2610	2680	2640	1960	3360	3050	3180	2330	3900	–	–	–	–
	1..15.1-1D.7	–	–	–	–	2570	2670	1850	3390	–	–	–	–	–	–	–	–
	1..15.3-1D.2	2150	1880	1430	2600	2760	2610	2040	3330	3200	3180	2480	3900	–	–	–	–
	1..15.3-1D.3	2120	1890	1400	2610	–	–	–	–	–	–	–	–	–	–	–	–
	1..15.3-1D.4	2020	1890	1300	2610	2680	2640	1960	3360	3050	3180	2330	3900	–	–	–	–
180	**1..15..-1E.2**	2510	2050	1360	3200	3240	2920	2090	4070	–	–	–	–	–	–	–	–
	1..15..-1E.4	–	–	–	–	3180	2930	2020	4090	3740	3560	2580	4710	4300	4090	3150	5240
	1..15..-1E.6	2490	2060	1330	3220	3160	2950	2010	4100	3740	3570	2580	4730	4090	4140	2940	5290
200	**1..15..-2A.4**	2920	3030	2110	3840	–	–	–	–	4570	5010	3760	5820	–	–	–	–
	1..15..-2A.5	2810	3060	2000	3870	3820	4210	3010	5020	4470	5060	3660	5870	5200	5750	4390	6560
	1..15..-2A.6	2810	3060	2000	3870	3820	4230	3010	5040	4400	5090	3590	5900	5010	5800	4200	6610
225	**1..15..-2B.0**	–	–	–	–	4200	4750	3150	5800	–	–	–	–	5900	6400	4850	7650
	1..15..-2B.2	3100	3400	2050	4450	4100	4850	3000	5850	4700	5800	3650	6850	5800	6450	4700	7500
	1..15..-2B.6	3100	3400	2050	4450	4100	4850	3000	5850	4650	5850	3600	6900	5500	6600	4400	7650
250	**1..15..-2C.2**	3850	4100	2250	5600	4850	5650	3250	7250	5750	6750	4200	8350	6900	7700	5300	9200
	1..15..-2C.6	3850	4100	2250	5600	4800	5750	3200	7400	5750	6750	4200	8450	6700	7800	5000	9300

For frame sizes > 250 standard version.

© Siemens AG 2018

Overview (continued)

1LE15, 1MB15, 1LE16, 1MB16, 1LE55, and 1LE56 motors in horizontal type of construction – basic version

Frame size	Type	2-pole – 3000 rpm		4-pole – 1500 rpm		6-pole – 1000 rpm		8-pole – 750 rpm		Type	2-pole – 3000 rpm		4-pole – 1500 rpm		6-pole – 1000 rpm		8-pole – 750 rpm	
		Load Tension	Thrust	Tension	Thrust	Tension	Thrust	Tension	Thrust		Load Tension	Thrust	Tension	Thrust	Tension	Thrust	Tension	Thrust
		N	N	N	N	N	N	N	N		N	N	N	N	N	N	N	N
1LE15, 1MB15 – Basic Line										**1LE16, 1MB16 – Performance Line**								
71	**1..1501-0C.2**	230	90	230	200	230	280	–	–	**–**	–	–	–	–	–	–	–	–
	1..1501-0C.3	230	80	230	190	230	280	–	–	**–**	–	–	–	–	–	–	–	–
	1..1503-0C.2	230	80	230	190	230	280	–	–	**–**	–	–	–	–	–	–	–	–
	1..1503-0C.3	230	80	230	180	230	260	–	–	**–**	–	–	–	–	–	–	–	–
80	**1..1501-0D.2**	260	260	260	430	260	570	–	–	**–**	–	–	–	–	–	–	–	–
	1..1501-0D.3	260	250	260	420	260	550	–	–	**–**	–	–	–	–	–	–	–	–
	1..1503-0D.2	260	250	260	420	260	550	–	–	**–**	–	–	–	–	–	–	–	–
	1..1503-0D.3	260	240	260	400	260	540	–	–	**–**	–	–	–	–	–	–	–	–
90	**1..1501-0E.0**	250	270	250	440	250	580	–	–	**–**	–	–	–	–	–	–	–	–
	1..1501-0E.4	250	260	250	430	250	570	–	–	**–**	–	–	–	–	–	–	–	–
	1..1503-0E.0	250	260	250	430	250	570	–	–	**–**	–	–	–	–	–	–	–	–
	1..1503-0E.4	250	250	250	410	250	560	–	–	**–**	–	–	–	–	–	–	–	–
100	**1..15.1-1A.4**	1120	400	1370	650	1560	840	1740	1020	**1..16.1-1A.4**	1440	880	1820	1260	2110	1550	2380	1820
	1..15.1-1A.5	–	–	1350	630	–	–	1730	1010	**1..16.1-1A.5**	–	–	1800	1240	–	–	2370	1810
	1..15.1-1A.6	1000	380	1330	610	1530	810	–	–	**1..16.1-1A.6**	1430	870	1780	1220	2090	1530	–	–
	1..15.3-1A.4	1000	380	1330	610	–	–	–	–	**1..16.3-1A.4**	1430	870	1780	1220	–	–	–	–
	1..15.3-1A.5	–	–	1330	610	–	–	–	–	**1..16.3-1A.5**	–	–	1780	1220	–	–	–	–
112	**1..15.1-1B.2**	1110	390	1360	640	1560	840	1730	1010	**1..16.1-1B.2**	1430	870	1810	1250	2110	1550	2370	1810
	1..15.1-1B.6	1090	370	1340	620	1540	820	–	–	**1..16.1-1B.6**	1410	850	1790	1230	2090	1530	–	–
	1..15.3-1B.2	1090	370	1340	620	1540	820	–	–	**1..16.3-1B.2**	1410	850	1790	1230	2090	1530	–	–
132	**1..15.1-1C.0**	1750	490	2130	870	2440	1180	2690	1430	**1..16.1-1C.0**	2330	1010	2890	1570	3340	2020	3710	2390
	1..15.1-1C.1	1740	480	–	–	–	–	–	–	**1..16.1-1C.1**	2320	1000	–	–	–	–	–	–
	1..15.1-1C.2	–	–	2100	840	2420	1160	2660	1400	**1..16.1-1C.2**	–	–	2870	1550	3320	2000	3680	2360
	1..15.1-1C.3	–	–	–	–	2390	1130	–	–	**1..16.1-1C.3**	–	–	–	–	3290	1970	–	–
	1..15.1-1C.6	1700	440	2060	800	2350	1090	–	–	**1..16.1-1C.6**	2280	960	2820	1500	3250	1930	–	–
	1..15.3-1C.0	1740	480	2060	800	2390	1130	–	–	**1..16.3-1C.0**	2320	1000	2820	1500	3290	1970	–	–
	1..15.3-1C.1	1700	440	–	–	–	–	–	–	**1..16.3-1C.1**	2280	960	–	–	–	–	–	–
	1..15.3-1C.2	–	–	2060	800	2390	1130	–	–	**1..16.3-1C.2**	–	–	2820	1500	3290	1970	–	–
	1..15.3-1C.3	–	–	–	–	2350	1090	–	–	**1..16.3-1C.3**	–	–	–	–	3250	1930	–	–
160	**1..15.1-1D.2**	1760	700	2170	1110	2480	1420	2800	1740	**1..16.1-1D.2**	2400	1680	3100	2380	3610	2890	4090	3370
	1..15.1-1D.3	1740	680	–	–	–	–	2740	1680	**1..16.1-1D.3**	2380	1660	–	–	–	–	4040	3320
	1..15.1-1D.4	1720	660	2130	1070	2420	1360	2710	1650	**1..16.1-1D.4**	2370	1650	3050	2330	3550	2830	4010	3290
	1..15.1-1D.6	1670	610	2100	1040	2360	1300	–	–	**1..16.1-1D.6**	2320	1600	3020	2300	3480	2760	–	–
	1..15.1-1D.7	–	–	2050	990	–	–	–	–	**1..16.1-1D.7**	–	–	2980	2260	–	–	–	–
	1..15.3-1D.2	1740	680	2130	1070	2420	1360	–	–	**1..16.3-1D.2**	2380	1660	3050	2330	3550	2830	–	–
	1..15.3-1D.3	1720	660	–	–	–	–	–	–	**1..16.3-1D.3**	2370	1650	–	–	–	–	–	–
	1..15.3-1D.4	1670	610	2100	1040	2360	1300	–	–	**1..16.3-1D.4**	2320	1600	3020	2300	3480	2760	–	–
180	**1..15..-1E.2**	1640	880	2100	1340	–	–			**1..16..-1E.2**	2860	1710	3660	2510	–	–	–	–
	1..15..-1E.4	–	–	2070	1310	2420	1660	2740	1980	**1..16..-1E.4**	–	–	3630	2480	4230	3080	4770	3620
	1..15..-1E.6	1630	870	2070	1310	2420	1660	2660	1900	**1..16..-1E.6**	2850	1700	3630	2480	4230	3080	4690	3540
200	**1..15..-2A.4**	2380	1230	–	–	3510	2360	–	–	**1..16..-2A.4**	3390	2580	–	–	5210	4400	–	–
	1..15..-2A.5	2340	1190	3020	1870	3470	2320	3920	2770	**1..16..-2A.5**	3340	2530	4430	3620	5170	4360	5880	5070
	1..15..-2A.6	2340	1190	3020	1870	3450	2300	3860	2710	**1..16..-2A.6**	3340	2530	4430	3620	5150	4340	5810	5000
225	**1..15..-2B.0**	–	–	3020	1980	–	–	3950	2950	**1..16..-2B.0**	–	–	4950	3900	–	–	6600	5550
	1..15..-2B.2	2350	1300	3020	1980	3400	2400	3900	2900	**1..16..-2B.2**	3800	2750	4950	3900	5750	4700	6550	5500
	1..15..-2B.6	2350	1300	3020	1980	3400	2400	3800	2800	**1..16..-2B.6**	3800	2750	4900	3850	5700	4650	6500	5450
250	**1..15..-2C.2**	2600	1750	3200	2400	3750	3000	4350	3550	**1..16..-2C.2**	4750	3150	6050	4450	7100	5500	8100	6500
	1..15..-2C.6	2550	1700	3200	2400	3750	3000	4300	3500	**1..16..-2C.6**	4750	3150	6050	4450	7100	5500	8000	6400
280	**1..15..-2D.0**	4500	2900	6700	5100	7900	6350	8800	7200	**1..16..-2D.0**	4500	2900	6700	5100	7900	6350	8800	7200
	1..15..-2D.2	4450	2850	6600	5000	7850	6300	8800	7200	**1..16..-2D.2**	4450	2850	6600	5000	7850	6300	8800	7200
	1..15..-2D.6	4450	2850	6600	5000	7850	6300	8800	7200	**1..16..-2D.6**	4450	2850	6600	5000	7850	6300	8800	7200
315	**1..15..-3A.0**	5000	2900	7550	5500	8900	6850	9800	7800	**1..16..-3A.0**	5000	2900	7550	5500	8900	6850	9800	7800
	1..15..-3A.2	4800	2700	7300	5250	8900	6850	9800	7800	**1..16..-3A.2**	4800	2700	7300	5250	8900	6850	9800	7800
	1..15..-3A.4	4750	2650	7300	5250	8550	6500	9500	7500	**1..16..-3A.4**	4750	2650	7300	5250	8550	6500	9500	7500
	1..15..-3A.5	4700	2600	7050	5000	8250	6200	9300	7300	**1..16..-3A.5**	4700	2600	7050	5000	8250	6200	9300	7300
	1..15..-3A.6	–	–	–	–	8250	6200	9100	7100	**1..16..-3A.6**	–	–	–	–	8250	6200	9100	7100

© Siemens AG 2018

Overview (continued)

Frame size	Type	2-pole – 3000 rpm Load Tension	2-pole – 3000 rpm Thrust	4-pole – 1500 rpm Tension	4-pole – 1500 rpm Thrust	6-pole – 1000 rpm Tension	6-pole – 1000 rpm Thrust	8-pole – 750 rpm Tension	8-pole – 750 rpm Thrust
		N	N	N	N	N	N	N	N
1LE55 – Basic Line									
315	**1LE55..-3A.6**	5400	3000	7750	5400	–	–	–	–
	1LE55..-3A.7	5200	2800	7750	5400	9100	6750	–	–
	1LE55..-3A.8	–	–	–	–	9000	6650	–	–
355	**–**	–	–	–	–	–	–	–	–
	–	–	–	–	–	–	–	–	–
	–	–	–	–	–	–	–	–	–
	–	–	–	–	–	–	–	–	–

Type	2-pole – 3000 rpm Load Tension	2-pole – 3000 rpm Thrust	4-pole – 1500 rpm Tension	4-pole – 1500 rpm Thrust	6-pole – 1000 rpm Tension	6-pole – 1000 rpm Thrust	8-pole – 750 rpm Tension	8-pole – 750 rpm Thrust
	N	N	N	N	N	N	N	N
1LE56 – Performance Line								
1LE56..-3A.6	5400	3000	7750	5400	–	–	–	–
1LE56..-3A.7	5200	2800	7750	5400	9100	6750	–	–
1LE56..-3A.8	–	–	–	–	9000	6650	–	–
1LE56..-3B.2	–	–	–	–	9900	6000	–	–
1LE56..-3B.3	5000	3200	8800	5000	9800	5900	–	–
1LE56..-3B.4	5000	3200	8750	4950	9800	5900	–	–
1LE56..-3B.5	5000	3200	8700	4900	–	–	–	–

1LE15 and 1MB15 motors in horizontal type of construction – bearings reinforced at both ends – order code **L25**

Frame size	Type	2-pole – 3000 rpm Load Tension	2-pole – 3000 rpm Thrust	4-pole – 1500 rpm Tension	4-pole – 1500 rpm Thrust	6-pole – 1000 rpm Tension	6-pole – 1000 rpm Thrust	750 rpm Tension	750 rpm Thrust
		N	N	N	N	N	N	N	N
1LE15, 1MB15 – Basic Line									
71/80/90		Available soon							
100	**1..15.1-1A.4**	1440	880	1820	1260	2110	1550	2380	1820
	1..15.1-1A.5	–	–	1800	1240	–	–	2370	1810
	1..15.1-1A.6	1430	870	1780	1220	2090	1530	–	–
	1..15.3-1A.4	1430	870	1780	1220	–	–	–	–
	1..15.3-1A.5	–	–	1780	1220	–	–	–	–
112	**1..15.1-1B.2**	1430	870	1810	1250	2110	1550	2370	1810
	1..15.1-1B.6	1410	850	1790	1230	2090	1530	–	–
	1..15.3-1B.2	1410	850	1790	1230	2090	1530	–	–
132	**1..15.1-1C.0**	2330	1010	2890	1570	3340	2020	3710	2390
	1..15.1-1C.1	2320	1000	–	–	–	–	–	–
	1..15.1-1C.2	–	–	2870	1550	3320	2000	3680	2360
	1..15.1-1C.3	–	–	–	–	3290	1970	–	–
	1..15.1-1C.6	2280	960	2820	1500	3250	1930	–	–
	1..15.3-1C.0	2320	1000	2820	1500	3290	1970	–	–
	1..15.3-1C.1	2280	960	–	–	–	–	–	–
	1..15.3-1C.2	–	–	2820	1500	3290	1970	–	–
	1..15.3-1C.3	–	–	–	–	3250	1930	–	–

Frame size	Type	2-pole – 3000 rpm Load Tension	2-pole – 3000 rpm Thrust	4-pole – 1500 rpm Tension	4-pole – 1500 rpm Thrust	6-pole – 1000 rpm Tension	6-pole – 1000 rpm Thrust	8-pole – 750 rpm Tension	8-pole – 750 rpm Thrust
		N	N	N	N	N	N	N	N
1LE15, 1MB15 – Basic Line									
160	**1..15.1-1D.2**	2400	1680	3100	2380	3610	2890	4090	3370
	1..15.1-1D.3	2380	1660	–	–	–	–	4040	3320
	1..15.1-1D.4	2370	1650	3050	2330	3550	2830	4010	3290
	1..15.1-1D.6	2320	1600	3020	2300	3480	2760	–	–
	1..15.1-1D.7	–	–	2980	2260	–	–	–	–
	1..15.3-1D.2	2380	1660	3050	2330	3550	2830	–	–
	1..15.3-1D.3	2370	1650	–	–	–	–	–	–
	1..15.3-1D.4	2320	1600	3020	2300	3480	2760	–	–
180	**1..15..-1E.2**	2860	1710	3660	2510	–	–	–	–
	1..15..-1E.4	–	–	3630	2480	4230	3080	4770	3620
	1..15..-1E.6	2850	1700	3630	2480	4230	3080	4690	3540
200	**1..15..-2A.4**	3390	2580	–	–	5210	4400	–	–
	1..15..-2A.5	3340	2530	4430	3620	5170	4360	5880	5070
	1..15..-2A.6	3340	2530	4430	3620	5150	4340	5810	5000
225	**1..15..-2B.0**	–	–	4950	3900	–	–	6600	5550
	1..15..-2B.2	3800	2750	4950	3900	5750	4700	6550	5500
	1..15..-2B.6	3800	2750	4900	3850	5700	4650	6500	5450
250	**1..15..-2C.2**	4750	3150	6050	4450	7100	5500	8100	6500
	1..15..-2C.6	4750	3150	6050	4450	7100	5500	8000	6400

For frame sizes > 250 standard version.

© Siemens AG 2018

Overview

The drainage of condensed water is an important aspect of proper motor maintenance.

Drainage of condensed water is made easy by rotating the outer cap.

If there are condensate drain holes present, these must be opened at regular intervals, depending on climatic conditions and in accordance with the motor operating instructions.

"Modifiable T-Drain" is closed on delivery of the motor and corresponds to degree of protection IP55/IP56.

When opened, it corresponds to degree of protection IP45/IP46. The opened T-Drain can be used for continuous drainage of condensed water in environments with low amounts of dust.

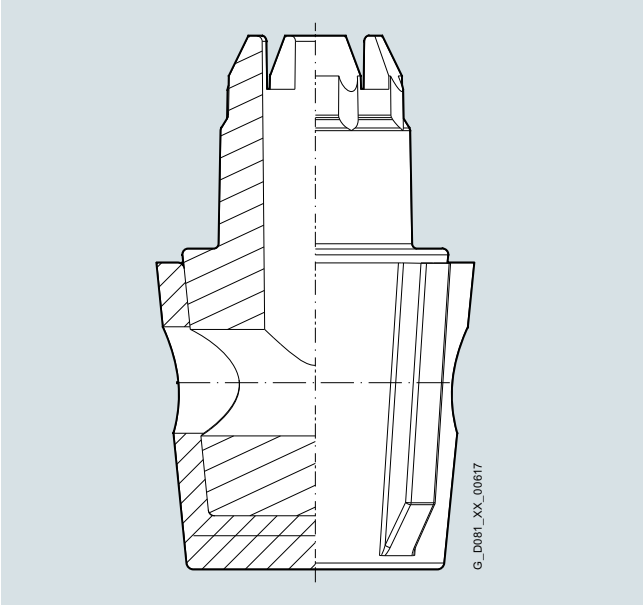

Note:
Motors of the LOHER CHEMSTAR series can be designed in IP66, see Catalog D 83.1.

A screw-mounted cover (made of sheet metal or plastic depending on shaft height) is included as standard for horizontal types of construction and types of construction with shaft pointing upwards (14th position of the Article No. letter **A**, **T**, **U**, **V**, **D**, **F**, **H**, **J**, **K**, **L**, **N**) in combination with condensation drainage holes, order code (**H03**) to facilitate assembly/disassembly.

When the motors are used or stored outdoors, we recommend that they be kept under some sort of additional cover so that they are not subjected to direct intensive solar radiation, rain, snow, ice or dust over a long period of time. In such cases, technical consultation may be appropriate.

When the motors are used outdoors or in a corrosive environment, it is recommended that non-rusting screws are used externally.
Order code **H07**

Vibration-proof version
Continuous vibration resistance to class 3M4 according to IEC 721-3-3:1994 (order code **H02** in combination with order code **G01**, **G02**, **G04**, **G05**, **G06**, **G11**, and **G12** or **F70** on request only).
Order code **H02**

For availability of individual options for the relevant motor series, see section "Special versions" in the respective sections of the catalog.

© Siemens AG 2018

Overview

1LE10, 1MB10 and 1PC10 motors without feet have four cast lifting eyes as standard, each offset by 90°; in the case of screwed-on feet, two lifting eyes are covered by the feet, so in this case only two lifting eyes are available for use. This data is only valid up to frame size 200.

Housing material

Motor series	Frame size	Housing material	Housing feet
1LE10, 1PC1 [2]	63 … 160	Aluminum alloy	cast [1]
	180 … 200	Aluminum alloy	screwed on [1]
1MB10	100 … 160	Aluminum alloy	cast [1]
1LE15 **1MB15** **1PC1301** [3]	71 … 315	Cast iron	cast [1]
1LE16 **1MB16**	100 … 315	Cast iron	cast [1]

Arrangement of lifting eyes/eyebolts (standard)

Frame size	Terminal box position	Cast-iron motors	Aluminum motors	Arrangement of eyebolts	Thread size
63	–	–	None	–	–
71	–	None	None	–	M8
80	Short housing	None	None	–	M8
	Top (long housing)	Two eyebolts		Left/right center	
	Left/right (long housing)	One eyebolt		Top center	
90	Top	Two eyebolts	None	Left/right center	M8
	Left/right	One eyebolt		Top center	
100		Depending on type of construction [4]	Lifting eyes	Top; Left DE side/	M8
112				right NDE side [10]	
132					
160					M10
180		Two eyebolts [10]			M12
200					M16
225		Two eyebolts [11]	–	[5] [6] [7]	M16
250					M20
280					
315 S/M [12]					M24
315 L		Four eyebolts		top; left/right DE and NDE side [8] [9]	
315 L (1LE5)		Two eyebolts			M30
355 M/L (1LE5)					

1) Basic version, cast feet: Special version "Screwed-on feet (instead of cast)" with digits **5**, **6**, and **7** in the 16th position of Article No. or digit **4** with order code **H01**. Screwed-on feet as standard for 1LE10 motors in frame sizes 180 and 200 and motors with increased power.

2) Aluminum motors in frame sizes 80 and 90 and 1PC10 motors in frame sizes 100 to 160 without lifting eyes. Aluminum motors in frame sizes 100 to 200 with cast lifting eyes (does not apply to 1PC10 and 1MB10 motors in frame sizes 180 and 200).

3) 1LE16 motors frame size 100 and above, 1PC1301 motors frame size 180 and above.

4) Two eyebolts for
- IM B5, IM B14, IM V1 or
- IM B34, IM B35 with **H01** or left/right, side terminal box position.

Lifting eyes for
- IM B3 or
- IM B34, IM B35 without **H01** or non-side left/right terminal box position.

5) For IM B3; IM B5: top; DE side left / NDE side right. With rotation of the terminal box through 180° (R12): top; NDE side left / DE side right.

6) For IM V1: top; NDE side right; down; NDE side left.

7) For IM V3: top; DE side left; down; DE side right.

8) For IM V1: NDE side, left/right; top/bottom.

9) For IM V3: DE side, left/right; top/bottom.

10) With rotation of the terminal box through 180° (R12): top; NDE side left / DE side right.

11) Motors with brakes have four top eyebolts.
For IM V1: NDE side, left/right; top/bottom.
For IM V3: DE side, left/right; top/bottom.

12) The assignment 315 L is used for 1000 kg and over.

© Siemens AG 2018

Overview

Brakes as well as rotary encoders of the "modular and special technology" can be retrofitted. The motor must be prepared for this. This is possible for all 1LE1 motors (with the exception of 1LE1 with option **F90** – version "Forced-air cooled motors without external fan and fan cover").

Preparation of the shaft extension at NDE can be ordered with the option "Prepared for mountings, only center hole", order code **G40** for the following frame sizes and mountings:

- Frame sizes 80 to 315: brakes with order code **F01**
- Frame sizes 71 and 90: only rotary encoders with order codes **G01**, **G02**, **G11**, or **G12** from the "modular technology" range
- Frame sizes 100 to 315: all rotary encoders from the "modular and special technology" ranges

Dimensions of center holes

Frame size	∅	L (drilling depth)
100	16^{H7}	34
112	16^{H7}	34
132	22^{H8}	39
160	28^{H8}	42

The length of the motor does not change because the shaft extension is still under the fan cover.

For motors ordered with order code **G40**, the following conversion combinations are possible:

- Frame sizes 71 and 90:
  Either brakes with order code **F01** or rotary encoders with order code **G01** or **G02** from the "modular technology".
  The combination of brake (**F01**) and rotary encoder (G01/G02) is not possible.
- Frame sizes 100 to 315:
  Brakes with order code **F01** or rotary encoders from the "modular and special technology". The combination of brake (**F01**) and rotary encoder is possible.

Conversion is performed exclusively by the authorized contractual partners of Siemens.

For motors of series 1LE15 and 1LE16 frame sizes 100 to 315, grounding brushes are available for converter operation.
Order code **L52**. Please contact your local Siemens office for advice.

For mountings, such as rotary encoders, supplied by the customer, the following applies:

For the rotary encoders:

- 1XP8012-10, order code **G01**
- 1XP8012-20, order code **G02**
- Sendix 5020, order code **G11** and **G12**

from the "modular technology" this preparation of the shaft extension on NDE can be ordered with the option "Prepared for mounting with shaft D12".
Order code **G41**
The length of the motor increases by ΔI due to option **G41**.
For an explanation of the additional dimensions and weights, see "Modular technology" "Dimensions and weights".

For the rotary encoders:

- LL 861 900 220, order code **G04**
- HOG 9 DN 1024 I, order code **G05**
- HOG 10 D 1024 I, order code **G06**

from the "special technology" this preparation of the shaft extension on NDE can be ordered with the option "Prepared for mounting with shaft D16" for motors of frame sizes 100 to 160 only.
Order code **G42**
The length of the motor increases by ΔI due to option **G42**.
For an explanation of the additional dimensions and weights, see "Modular technology" "Dimensions and weights".

Motors that are prepared for mountings supplied by the customer (order codes **G41**, **G42**) are supplied without a protective cover as standard. These mountings can be installed by the customer.

If a protective cover is requested as a cover or mechanical protection for mountings provided by the customer, this can be ordered with order code **G43**.
This protective cover is designed and mounted differently as described below according to frame size:

Frame sizes 71 to 90 and 180 to 200:
Motors ordered with order code **G43** are fitted as standard with a screw-mounted cover (made of sheet metal or plastic depending on shaft height). The protective cover is mounted in the factory. To install the mountings supplied by the customer, the protective cover must be removed beforehand by unscrewing the external fixing screws and reattached afterwards. Protective covers for motors of these frame sizes are not suitable for mountings that correspond to the shape and size of the rotary encoders of the "special technology" (**G04**, **G05**, **G06**, see above).

Frame sizes 100 to 315:
The protective cover must be installed by the customer in accordance with the assembly instructions supplied. It has supports of varying length that can be used for installation according to the height of the planned mountings.

The standard protective cover (order code **H00**) is not suitable for protection of additional mountings, such as rotary encoders.

Order codes **G40**, **G41**, **G42** are not possible in conjunction with order code **L00** vibration severity grade B.

Order code **G43** is only appropriate in combination with order codes **G41** and **G42**, and not in combination with **G40**.

© Siemens AG 2018

Overview

The 1LE and 1FP motors (with the exception of 1LE1 with option **F90** – version "Forced-air cooled motors without external fan and fan cover" and 1PC1) can be used in a much wider range of applications (e.g. as motors with brakes) if the following modules are mounted:

- Separately driven fan
- Brake
- Rotary pulse encoder

The brake must always be mounted in the factory for safety reasons. The rotary pulse encoder and/or the separately driven fan can also be retrofitted.

The degree of protection of the motors with modular technology is IP55. Higher degrees of protection on request.

Attaching rotary pulse encoder, brake, and separately driven fan increases the length of the motor by dimension ΔI. For explanations of the additional dimension and weights, see "Mounting technology" and "Dimensions and weights" from page 1/106.

Separately driven fan

The use of a separately driven fan is recommended to increase motor utilization at low speeds and to limit noise generation at speeds significantly higher than the synchronous speed. Both of these results can only be achieved with converter operation. Please inquire about traction and vibratory operation.

The separately driven fan can be supplied already fitted, order code **F70**. There is no automatic adjustment of the voltage for the separately driven fan when ordering a "special voltage" for the motor. This must be specified in addition using the **Y81** option.

It can also be ordered separately and retrofitted. For selection information and article numbers, see the section "Accessories" (available soon). A rating plate listing all the important data is fitted to the separately driven fan. Please note the direction of rotation of the separately driven fan (axial-flow fan) when connecting it. Admissible coolant temperatures CT_{min} –25 °C, CT_{max} +65 °C [1], lower/higher coolant temperatures are available on request. When the separately driven fan is mounted, the length of the motor increases by ΔI. For explanations of the additional dimension and weights, see "Mounting technology" and "Dimensions and weights" from page 1/106.

Technical specifications of forced ventilation (according to tolerances of EN 60034-1)

Frame size	Rated voltage range		Frequency	P_{max}	I_{max}
	V		Hz	kW	A
63	1 AC	230 to 277	50	0.027	0.11
	3 AC	200 to 303 Δ	50	0.028	0.12
	3 AC	346 to 525 Y	50	0.028	0.07
	1 AC	230 to 277	60	0.032	0.12
	3 AC	220 to 332 Δ	60	0.028	0.1
	3 AC	380 to 575 Y	60	0.028	0.06
71	1 AC	230 to 277	50	0.027	0.1
	3 AC	200 to 303 Δ	50	0.031	0.11
	3 AC	346 to 525 Y	50	0.031	0.06
	1 AC	230 to 277	60	0.033	0.12
	3 AC	220 to 332 Δ	60	0.029	0.1
	3 AC	380 to 575 Y	60	0.029	0.06
80	1 AC	230 to 277	50	0.029	0.11
	3 AC	200 to 303 Δ	50	0.031	0.11
	3 AC	346 to 525 Y	50	0.031	0.06
	1 AC	230 to 277	60	0.037	0.14
	3 AC	220 to 332 Δ	60	0.034	0.1
	3 AC	380 to 575 Y	60	0.034	0.06
90	1 AC	220 to 277	50	0.065	0.29
	3 AC	200 to 303 Δ	50	0.091	0.38
	3 AC	346 to 525 Y	50	0.091	0.22
	1 AC	220 to 277	60	0.065	0.25
	3 AC	220 to 332 Δ	60	0.077	0.33
	3 AC	380 to 575 Y	60	0.077	0.19
100	1 AC	220 to 277	50	0.066	0.28
	3 AC	200 to 303 Δ	50	0.091	0.37
	3 AC	346 to 525 Y	50	0.091	0.22
	1 AC	220 to 277	60	0.075	0.3
	3 AC	220 to 332 Δ	60	0.087	0.31
	3 AC	380 to 575 Y	60	0.087	0.18

Technical specifications of forced ventilation (according to tolerances of EN 60034-1)

Frame size	Rated voltage range		Frequency	P_{max}	I_{max}
	V		Hz	kW	A
112	1 AC	220 to 277	50	0.071	0.28
	3 AC	200 to 303 Δ	50	0.097	0.35
	3 AC	346 to 525 Y	50	0.097	0.2
	1 AC	220 to 277	60	0.094	0.37
	3 AC	220 to 332 Δ	60	0.103	0.31
	3 AC	380 to 575 Y	60	0.103	0.18
132	1 AC	230 to 277	50	0.098	0.4
	3 AC	200 to 303 Δ	50	0.124	0.58
	3 AC	346 to 525 Y	50	0.124	0.33
	1 AC	230 to 277	60	0.149	0.57
	3 AC	220 to 332 Δ	60	0.148	0.44
	3 AC	380 to 575 Y	60	0.148	0.25
160 to 200	1 AC	230 to 277	50	0.253	0.97
	3 AC	200 to 303 Δ	50	0.247	0.87
	3 AC	346 to 525 Y	50	0.247	0.5
	3 AC	220 to 332 Δ	60	0.36	0.93
	3 AC	380 to 575 Y	60	0.36	0.56
225 M to 280 M	3 AC	200 to 240 Δ	50	0.450	2.00
	3 AC	380 to 420 Y	50	0.450	1.15
	3 AC	440 to 480 Y	60	0.520	1.05
315 2-pole	3 AC	200 to 240 Δ	50	0.650	2.85
	3 AC	380 to 420 Y	50	0.650	1.64
	3 AC	440 to 480 Y	60	0.750	1.60
315 4, 6, 8-pole	3 AC	200 to 240 Δ	50	0.450	2.00
	3 AC	380 to 420 Y	50	0.450	1.15
	3 AC	440 to 480 Y	60	0.520	1.05
355 2 and 4-pole	3 AC	200 to 240 Δ	50	0.650	2.85
	3 AC	380 to 420 Y	50	0.650	1.64
	3 AC	440 to 480 Y	60	0.750	1.60

For article numbers and type details, see operating instructions.

[1] For single-phase variants (1 AC) of frame size 160, the admissible coolant temperature CT_{max} is +50 °C.

© Siemens AG 2018

Overview (continued)

Brakes

The brakes with order code **F01** (**F02** brake for increased frequency of operation for SIMOTICS GP motors on request) are designed to be spring-operated brakes. When the brake is ordered, the supply voltage must be specified. For an explanation of the supply voltage, see the descriptions of each brake model in "Modular technology".

For the design of the braking time, run-on revolutions, braking energy per braking procedure as well as the lifetime of the brake linings, see "Configuration of motors with brakes" on page 1/92.

When a brake is mounted, the length of the motor increases by ΔI. For explanations of the additional dimension and weights, see "Mounting technology" and "Dimensions and weights" from page 1/106.

*The brake can be retrofitted by authorized partners. The motor must be prepared for this. When the motor is ordered, the option "Prepared for mountings, center hole only" order code **G40** must be specified (see "Mechanical version and degrees of protection" on page 1/79).*

Ambient temperature

- –40°C to +45°C (with nominal excitation) for SFB-SH brake
- –40°C to +75°C (with double excitation) for SFB-SH brake
- –20 to +40 °C holding/operating brake (standard 2LM8)
- up to +60 °C only as holding brake
- –20 to +60 °C holding/operating brake only for KFB and FDX brake

Definition of duty type

- Operating brake:
  The motor shaft can be braked from full operating speed down to zero speed of the motor. All the kinetic energy produced by the drive train is converted to heat by friction during braking. Braking energy is produced at $n > 0$ rpm. The maximum permissible switching frequency must be taken into account. When this brake is used, installation of a separately driven fan is recommended in order to ensure adequate cooling when the motor is at a standstill. The operating brake is also capable of functioning as a holding brake.
- Holding brake:
  The purpose of braking or "holding" the motor shaft is merely to suppress unintended rotation caused by externally applied torque forces, e.g. when a load is suspended from a crane rope drum. The holding brake is primarily deployed when the motor is at a standstill ($n = 0$ rpm) by holding the motor shaft or is close to $n = 0$ rpm and coasting down to a standstill. As a result, no additional braking energy or braking heat is transferred to the motor.

Note:
A holding brake must not be used as an operating brake as it could then cause danger to life and damage to property.

Bridge rectifier / half-wave rectifier

Brakes are connected through a standard bridge or half-wave rectifier or directly to the 2LM8/SFB-SH brake. See the circuit diagrams below.

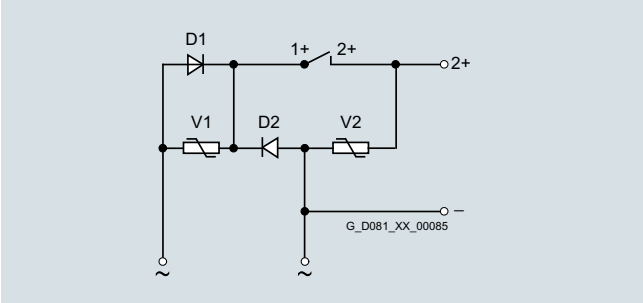

Half-wave rectifier 400 V AC

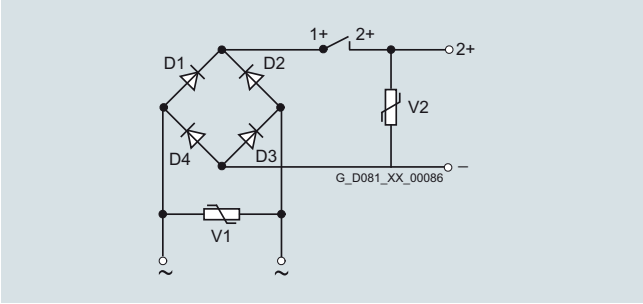

Bridge rectifier 230 V AC

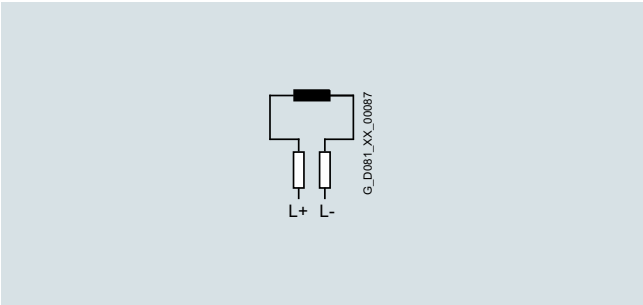

Brake connection for 24 V DC

© Siemens AG 2018

Overview (continued)

2LM8 spring-operated disk brake

Motor series

This brake is the standard brake for 1LE1/1FP1 motors in frame sizes 63 to 225 (except for 1LE1 with order code **F90** version "Forced-air cooled motors without external fan and fan cover").

Other characteristics of the 2ML8 brake

The 2LM8 brake has IP55 degree of protection.

Please inquire if motors with brakes are to be operated below the freezing point or in conjunction with very humid environments (e.g. close to the sea) with long standstill times. Please also inquire if motors with brakes are to be used for low-speed converter operation.

Design and mode of operation

The brake takes the form of a single-disk brake with two friction surfaces.

The braking torque is generated by friction when pressure is applied by one or more pressure springs in the de-energized state.
The brake is released electromagnetically.

When the motor brakes, the rotor which can be axially shifted on the hub or the shaft is pressed via the armature disk against the friction surface by means of the springs. In the braked state, there is a gap S_{Gap} between the armature disk and the solenoid component. To release the brake, the solenoid is energized with DC voltage. The resulting magnetic force pulls the armature disk against the spring force on to the solenoid component. The spring force is then no longer applied to the rotor, which can rotate freely.

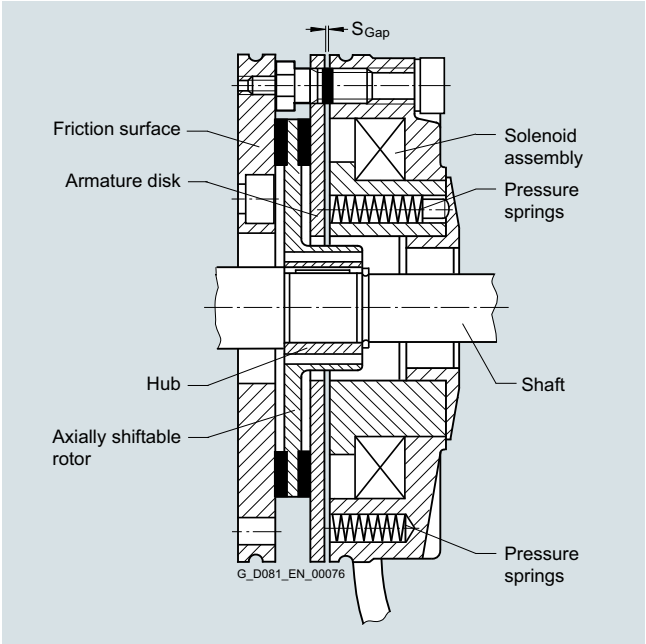

Design of the 2LM8 spring-operated disk brake

Rating plate

The following brake data is specified on the motor rating plate:

- Brake type
- Supply voltage
- Frequency
- Current
- Temperature class
- Braking torque

Voltage and frequency

The solenoids and the brake rectifier are designed for connection to the following voltages or can be supplied for the following voltages:

- Brake supply voltage 24 V DC
  Order code **F10**
- Brake supply voltage 230 V AC
  Order code **F11**
- Brake supply voltage 400 V AC
  (directly at the terminal strip)
  Order code **F12**

When 60 Hz is used, the voltage for the brake must not be increased!

Order codes **F10**, **F11**, and **F12** must only be used in conjunction with order code **F01**.

Lifetime of the brake lining

The braking energy L_N until readjustment of the brake depends on various factors. The main influencing factors include the masses to be braked, the operating speed, the switching frequency, and therefore the temperature at the frictional surfaces. This means it is not possible to specify a value for the friction energy until readjustment that is valid for all operating conditions.

When used as an operating brake, the specific frictional surface wear (wear volume for the frictional work) is approximately 0.05 to 2 cm^3/kWh.

© Siemens AG 2018

Overview (continued)

Operating values for spring-operated brakes with standard excitation

For motor frame size	Brake type	Rated braking torque at 100 rpm	Rated braking torque at 100 rpm in % at the following speeds			Supply voltage	Current/ power input [1]		Brake application time t_2 [2]	Brake release time	Brake moment of inertia	Noise level L_p with rated air gap	Service capability of the brake: Lifetime L of the brake lining	Service capability of the brake: Air gap adjustment required after braking energy L_N
			1500 rpm	3000 rpm	Max. speed									
		Nm	%	%	%	V	A	W	ms	ms	kgm^2	dB (A)	Nm · 10^6	Nm · 10^6
63	**2LM8 005-1NA10**	5	87	80	65	AC 230	0.1	20	25	56	0.000013	77	105	16
	2LM8 005-1NA60					AC 400	0.11							
	2LM8 005-1NA80					DC 24	0.83							
71	**2LM8 005-2NA10**	5	87	80	65	AC 230	0.1	20	25	56	0.000013	77	105	16
	2LM8 005-2NA60					AC 400	0.11							
	2LM8 005-2NA80					DC 24	0.83							
80	**2LM8 010-3NA10**	10	85	78	65	AC 230	0.12	25	26	70	0.000045	75	270	29
	2LM8 010-3NA60					AC 400	0.14							
	2LM8 010-3NA80					DC 24	1.04							
90	**2LM8 020-4NA10**	20	83	76	66	AC 230	0.15	32	37	90	0.00016	75	740	79
	2LM8 020-4NA60					AC 400	0.17							
	2LM8 020-4NA80					DC 24	1.25							
100	**2LM8 040-5NA10**	40	81	74	66	AC 230	0.2	40	43	140	0.00036	80	1350	115
	2LM8 040-5NA60					AC 400	0.22							
	2LM8 040-5NA80					DC 24	1.67							
112	**2LM8 060-6NA10**	60	80	73	65	AC 230	0.25	53	60	210	0.00063	77	1600	215
	2LM8 060-6NA60					AC 400	0.28							
	2LM8 060-6NA80					DC 24	2.1							
132	**2LM8 100-7NA10**	100	79	72	65	AC 230	0.27	55	50	270	0.0015	77	2450	325
	2LM8 100-7NA60					AC 400	0.31							
	2LM8 100-7NA80					DC 24	2.3							
160	**2LM8 260-8NA10**	260	75	68	65	AC 230	0.5	100	165	340	0.0073	79	7300	935
	2LM8 260-8NA60					AC 400	0.47							
	2LM8 260-8NA80					DC 24	4.2							
180	**2LM8 315-0NA10**	315	75	68	65	AC 230	0.5	100	152	410	0.0073	79	5500	470
	2LM8 315-0NA60					AC 400	0.56							
	2LM8 315-0NA80					DC 24	4.2							
200, 225	**2LM8 400-0NA10**	400	73	68	65	AC 230	0.55	110	230	390	0.0200	93	9450	1260
	2LM8 400-0NA60					AC 400	0.61							
	2LM8 400-0NA80					DC 24	4.6							

[1] For 400 V AC and for 24 V DC, the power can deviate by up to +10 % as a function of the selected supply voltage.

[2] The specified switching times are valid for switching on the DC side with a rated release travel and with the coil already warm. They are average values, which may vary depending on factors such as the rectifier type and the release travel. The brake application time for switching on the AC side, for example, is approximately 6 times longer than for switching on the DC side.

© Siemens AG 2018

Overview (continued)

Maximum admissible speeds

The maximum admissible speeds from which emergency stops can be made are listed in the next table. These speeds should be considered as guide values and must be checked for the specific operating conditions.

The maximum admissible friction energy depends on the switching frequency and is shown for the individual brakes in the following diagram. Increased wear can be expected when the brakes are used for emergency stops.

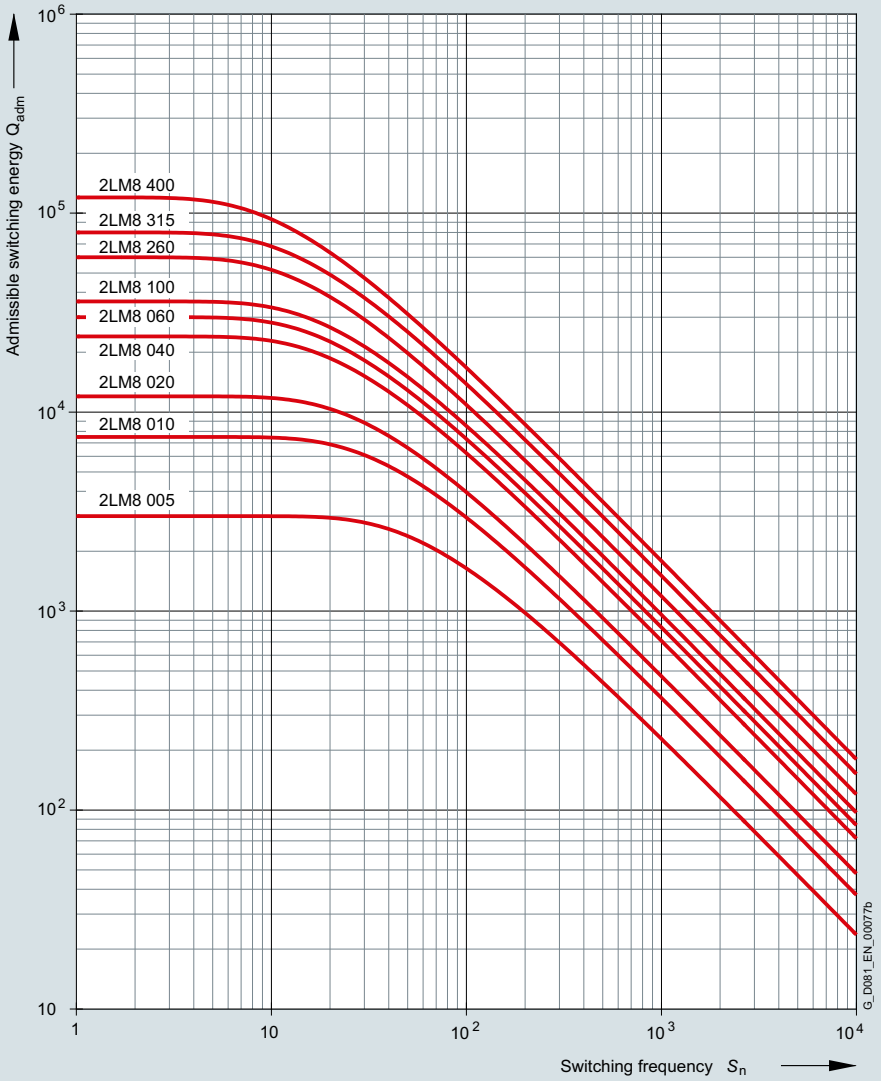

For motor frame size	Brake type	Maximum admissible speeds: Max. adm. operating rpm if max. operating energy utilized	Max. adm. no-load rpm with emergency stop function: for horizontal mounting position	Max. adm. no-load rpm with emergency stop function: for vertical mounting position	Changing the braking torque: Reduction per notch	Changing the braking torque: Dimension "O_1"	Changing the braking torque: Min. braking torque	Readjusting the air gap: Rated air gap $S_{Gap\ rated}$	Readjusting the air gap: Maximum air gap $S_{Gap\ max.}$	Readjusting the air gap: Minimum rotor thickness $h_{min.}$
		rpm	rpm	rpm	Nm	mm	Nm	mm	mm	mm
63	**2LM8 005-1NA . .**	3000	6000	6000	0.17	7	3.7	0.2	0.4	4.5
71	**2LM8 005-2NA . .**	3000	6000	6000	0.17	7	3.7	0.2	0.4	4.5
80	**2LM8 010-3NA . .**	3000	6000	6000	0.35	8.0	7.0	0.2	0.45	5.5
90	**2LM8 020-4NA . .**	3000	6000	6000	0.76	7.5	18.2	0.2	0.55	7.5
100	**2LM8 040-5NA . .**	3000	6000	6000	1.29	12.5	21.3	0.3	0.65	8.0
112	**2LM8 060-6NA . .**	3000	6000	6000	1.66	11.0	32.8	0.3	0.75	7.5
132	**2LM8 100-7NA . .**	3000	5300	5000	1.55	13.0	61.1	0.3	0.75	8.0
160	**2LM8 260-8NA . .**	1500	4400	3200	5.6	17.0	157.5	0.4	1.2	12.0
180	**2LM8 315-0NA . .**	1500	4400	3200	5.6	17.0	178.4	0.4	1.0	12.0
200, 225	**2LM8 400-0NA . .**	1500	3000	3000	6.15	21.0	248.7	0.5	1.5	15.5

© Siemens AG 2018

Overview (continued)

Changing the braking torque

The brake is supplied with the braking torque already set. For 2LM8 brakes, the torque can be reduced to the dimension O_1 by unscrewing the adjusting ring with a hook wrench. The braking torque changes by the values shown in the above table for each notch of the adjusting ring.

Readjusting the air gap

Under normal operating conditions, the brake is practically maintenance-free. The air gap S_{Gap} must only be checked at regular intervals if the application requires an extremely large amount of frictional energy and readjusted to the rated air gap $S_{Gap\ rated}$ at the latest when the maximum air gap $S_{Gap\ max}$ is reached.

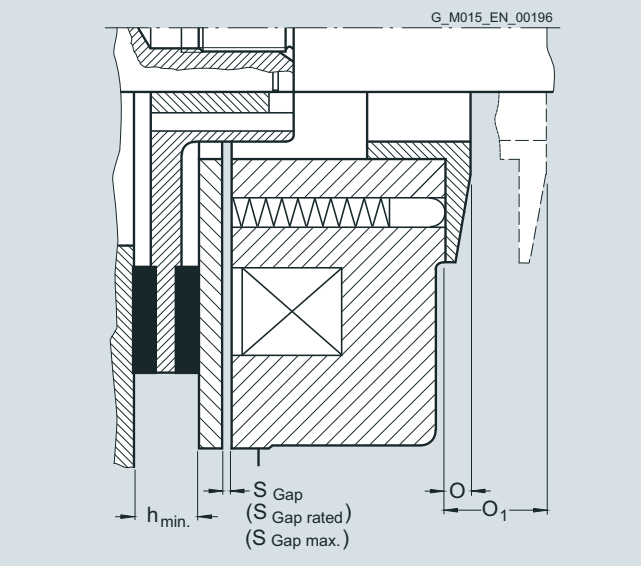

Connection

Labeled terminals are provided in the main terminal box of the motor to connect the brake.

The AC voltage for the brake excitation winding is connected to the two free terminals of the rectifier block (~).

The brake can be released when the motor is at a standstill by separately exciting the solenoid. In this case, an AC voltage must be connected at the rectifier block terminals. The brake remains released as long as this voltage is present.

The rectifiers are protected against overvoltages by varistors in the input and output circuits.

For 24 V DC brakes, the brake terminals are directly connected to the DC voltage source.

For this purpose, see the circuit diagrams on page 1/81.

Fast brake application

If the brake is disconnected from the line supply, the brake is applied.
The application time for the brake disk is delayed as a result of the inductance of the solenoid (shutdown on the AC side). This results in a considerable delay before the brake is mechanically applied. In order to achieve short brake application times, the circuit must be interrupted on the DC side. To realize this, the wire jumpers, located between contacts 1+ and 2+ at the rectifier, are removed and replaced by the contacts of an external switch.
For this purpose, see the circuit diagrams on page 1/81.

Mechanical manual brake release with lever

The brakes can be supplied with a mechanical manual release with lever.
Order code **F50**

The dimensions of the brake lever depend on the motor frame size and can be read from the dimensional drawing generator for motors in the DT Configurator tool for low-voltage motors.

© Siemens AG 2018

Overview (continued)

KFB spring-operated brake

KFB spring-operated brake

The KFB solenoid double-disk spring-operated brake is a safety brake that brakes the motor if the supply is disconnected (power failure, emergency stop). The KFB brake with degree of protection IP67 is mainly used for electric motors for traversing, cross-traversing and lifting gear in cranes as well as for special industrial applications.

Motor series

This brake is the standard brake for 1LE1 motors in frame sizes 250 to 315. For frame sizes 180 to 225, apart from the standard brake 2LM8, KFB brakes can also be supplied. Special brake selections are available on request.

Design and mode of operation

When the brake current is switched on, an electromagnetic field develops which overcomes the spring force of the brake. The corresponding modules, including the motor shaft, can rotate freely. The brake is released. If the brake current is switched off or if there is a power failure, the electromagnetic field of the brake disappears. The mechanical braking energy is transferred to the motor shaft. The motor is braked.

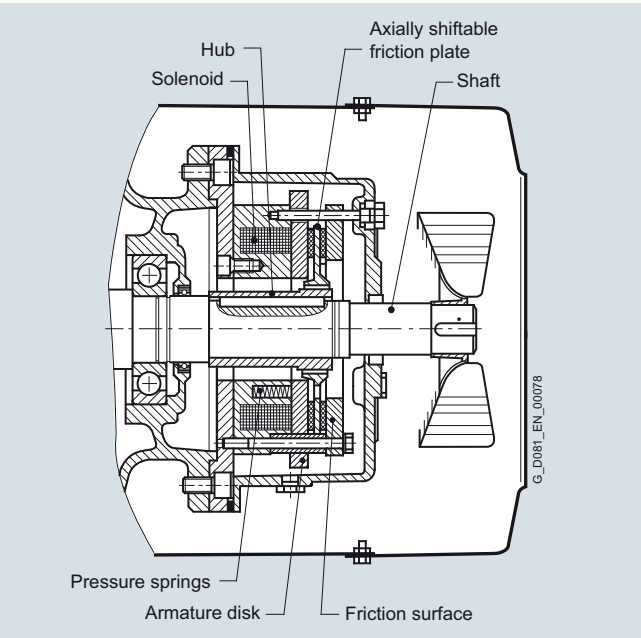

Design of KFB spring-operated brakes

Other characteristics of the KFB brake

- High degree of protection IP67.
- Corrosion-resistant in seawater and in the tropics.
- The brake is a dynamic brake, not simply a holding brake. For this reason there is less wear, especially in the case of emergency stops (commissioning).
- High wear reserves – repeated stepless air gap readjustment is possible. This results in extremely long operating times and low service and operating costs.
- The function and wear can be monitored with microswitches and proximity switches. Microswitch On/Off is standard for 1LE motors, frame size 250 to 315. Microswitch On/Off is not standard for 1LE motors, frame size up to 225. Anti-condensation heating is possible as an option.
- Fully functional brake for housing acceptance test. Visual inspection of brake is possible during operation.
- The brake (air gap) can be adjusted in the factory, for example, and mounted on the drive motor without further adjustments.
- The wear parts can be replaced without great outlay. After the housing has been opened (three screws), it is easy to replace the friction plate. It is not necessary to disassemble the entire brake.

Voltage and frequency

The solenoids and the brake rectifier can be connected to the following voltages:
1 AC 50 Hz 230 V ±10 %

When 60 Hz is used, the voltage for the brake must not be increased!

The brake can also be supplied for other voltages:

- Brake supply voltage: 24 V DC
  Order code **F10**
- Brake supply voltage: 230 V AC
  Order code **F11**
- Brake supply voltage: 400 V AC
  (directly at the terminal strip)
  Order code **F12**

Order codes **F10** and **F12** may only be used in conjunction with order code **F01**.

Fast brake application

Not available for the KFB brake.

Mechanical manual brake release with lever

The brake can be released manually with screws as standard. Mechanical manual release with a lever can be ordered with order code **F50**.

The dimensions of the brake lever depend on the motor frame size and can be read from the dimensional drawing generator for motors in the DT Configurator tool for low-voltage motors. Up-to-date data are available from the brake manufacturer.

© Siemens AG 2018

Overview (continued)

Connection

Labeled terminals are provided in the main terminal box of the motor to connect the brake.
KFB brakes are connected through a standard bridge or half-wave rectifier.

A special circuit is not required. Optimal switching times are achieved without the need to use special circuits.

For this purpose, see the circuit diagrams on page 1/81.

Maximum admissible speeds

The maximum admissible speeds from which emergency stops can be made are listed in the next table. These speeds should be considered as guide values and must be checked for the specific operating conditions.

The maximum admissible friction energy depends on the switching frequency and is shown for the individual brakes in the following diagram. Increased wear can be expected when the brakes are used for emergency stops.

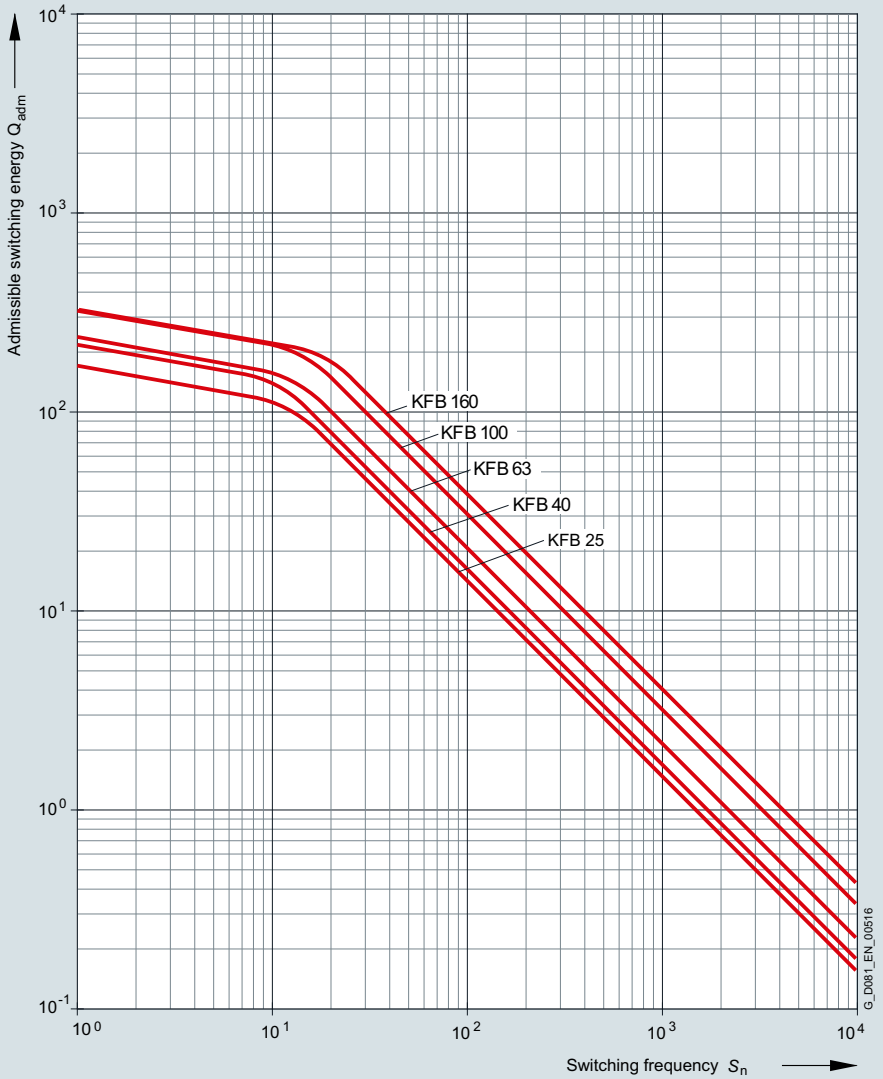

© Siemens AG 2018

Overview (continued)

Overview of brake selection for 1LE1 motors			For motor frame sizes					
			180 [1]	200 [1]	225 [1]	250 [2]	280 [2]	315 [2]
No. of poles			2 to 8	2 to 8	2 to 8	2 to 8	4 to 8	4 to 8
Flanged end shield NDE brake installation			A300	A350	A350	A400	A450	A550
Max. diameter of 2nd shaft extension			48_{k6}	55_{m6}	55_{m6}	60_{m6}	65_{m6}	70_{m6}
Brake type			**KFB 25**	**KFB 40**	**KFB 40**	**KFB 63**	**KFB 100**	**KFB 160**
Braking torque		Nm	225	360	360	567	900	1440
Nominal dynamic braking torque according to VDE 0580		Nm/rpm	250/127	400/117	400/117	630/92	1000/78	1600/69
Dynamic braking torque [3]	at 750 rpm	Nm	207	332	332	504	780	1248
	at 1000 rpm	Nm	200	316	316	491	760	1200
	at 1500 rpm	Nm	192	304	304	466	720	1136
	at 3000 rpm	Nm	175	276	276	378	580	880
	at n_{max}	Nm	137	220	220	346	500	800
Maximum speed n_{max} – IM B3/V1		rpm	6000	5500	5500	4700	4000	3600
Power at 110 V DC		W	158	196	196	220	307	344
Power at 230 V AC		W	160	188	188	206	316	340
Current at 110 V DC		A	1.44	1.78	1.78	2	2.79	3.13
Current at 230 V AC (207 V DC coil voltage)		A	0.77	0.91	0.91	1	1.53	1.64
Current at 400 V AC (180 V DC coil voltage)		A	0.8	1.18	1.18	1.25	1.8	2.1
Current at 24 V DC		A	5.21	6.92	6.92	8.17	12.2	12.8
Weight, approx.		kg	42	55	55	74	106	168
Application time t_1		ms	70	80	80	112	126	183
Release time t_2		ms	240	250	250	342	375	500
Brake moment of inertia		kgm^2	0.0048	0.0068	0.0068	0.0175	0.036	0.05
Lifetime L of the brake lining		$Nm \cdot 10^6$	3600	3110	3110	4615	7375	10945
Air gap adjustment L_N required after braking energy		$Nm \cdot 10^6$	810	935	935	1185	2330	3485

[1] The standard brake for frame sizes 180 to 225 is the 2LM8 brake. KFB brake on request.

[2] The standard brake for frame sizes 250 to 315 is the KFB brake.

[3] The dynamic braking torque also depends on the load data; temperatures in excess of the maximum admissible lining surface temperatures must be avoided.

© Siemens AG 2018

Overview (continued)

SFB-SH solenoid double-disk spring-operated brake

Motor series

This brake is the standard brake for 1LE5 motors in frame sizes 315 to 355.
Special brake selections are available on request.

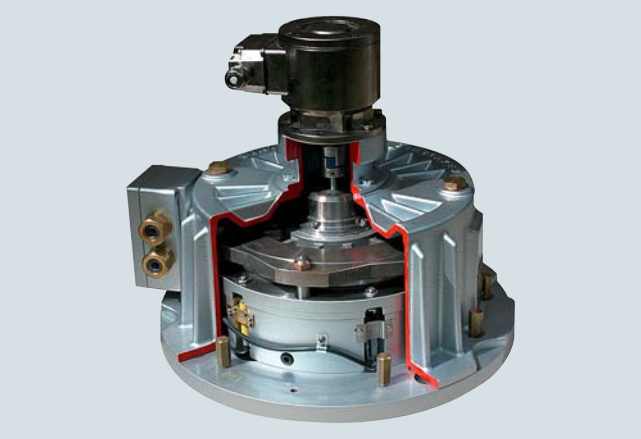

SFB-SH solenoid double-disk spring-operated brake

SFB-SH solenoid double-disk spring-operated brakes are safety brakes that are mechanically operated on a power failure. This ensures that the brake still works during a power failure. These brakes are designed for dry running, must only ever be operated in a safe state, and only installed, commissioned, operated, and maintained by specially trained installation personnel. The brakes of the SFB-SH type series have an increased braking torque due to use of a different friction material and are used for emergency stops as a dynamically loaded brake with a safety margin.

Other characteristics of the SFB-SH brake

- High degree of protection IP67.
- Corrosion-resistant in seawater and in the tropics.
- High wear margins – simple air-gap adjustment. This results in extremely long operating times and low service and operating costs.
- The function and wear can be monitored with microswitches and proximity switches. Microswitch On/Off is standard for 1LE5 motors. Anti-condensation heating is possible as an option.
- Fully functional brake for housing acceptance test. Visual inspection of brake is possible during operation.
- The brake (air gap) can be adjusted in the factory, for example, and mounted on the drive motor without further adjustments.
- The wear parts can be replaced without great effort. After the housing has been opened (three acorn nuts), it is easy to replace the friction plate. It is not necessary to disassemble the entire brake.

Design and mode of operation

When the brake current is switched on, an electromagnetic field develops which overcomes the spring force of the brake. The corresponding modules, including the motor shaft, can rotate freely. The brake is released. If the brake current is switched off or if there is a power failure, the electromagnetic field of the brake disappears. The mechanical braking energy is transferred to the motor shaft. The motor is braked.

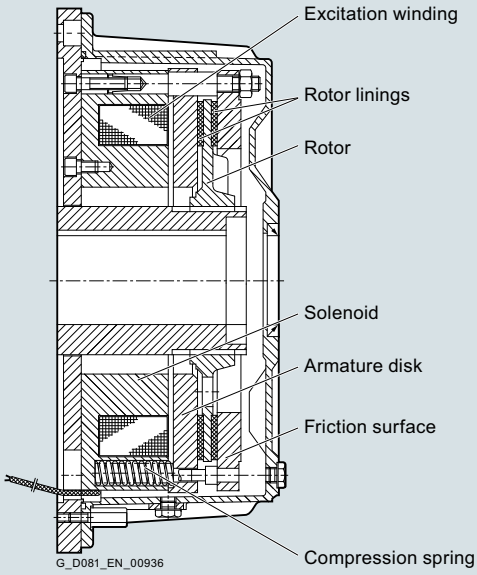

Design of the SFB-SH solenoid double-disk spring-operated brake

Voltage and frequency

The solenoids and the brake rectifier can be connected to the following voltages:
1 AC 50 Hz 230 V ±10 %

When 60 Hz is used, the voltage for the brake must not be increased!

The brake can also be supplied for other voltages:

- Brake supply voltage: 24 V DC
  Order code **F10**
- Brake supply voltage: 230 V AC
  Order code **F11**
- Brake supply voltage: 400 V AC
  (directly at the terminal strip)
  Order code **F12**

Order codes **F10** and **F12** may only be used in conjunction with order code **F01**.

© Siemens AG 2018

Overview (continued)

Connection

Labeled terminals are provided in the main terminal box of the motor to connect the brake.

The AC voltage for the brake excitation winding is connected to the two free terminals of the rectifier block (~). The rectifier is located in the main terminal box and must be connected in the customer's switchboard.

The brake can be released when the motor is at a standstill by separately exciting the solenoid. In this case, an AC voltage must be connected at the rectifier block terminals. The brake remains released as long as this voltage is present.

For 24 V DC brakes, the brake terminals are directly connected to the DC voltage source.

For this purpose, see the circuit diagrams on page 1/81.

Maximum admissible speeds

The maximum admissible speeds from which emergency stops can be made are listed in the next table. These speeds should be considered as guide values and must be checked for the specific operating conditions.

The maximum admissible friction energy depends on the switching frequency and is shown for the individual brakes in the following diagram. Increased wear can be expected when the brakes are used for emergency stops.

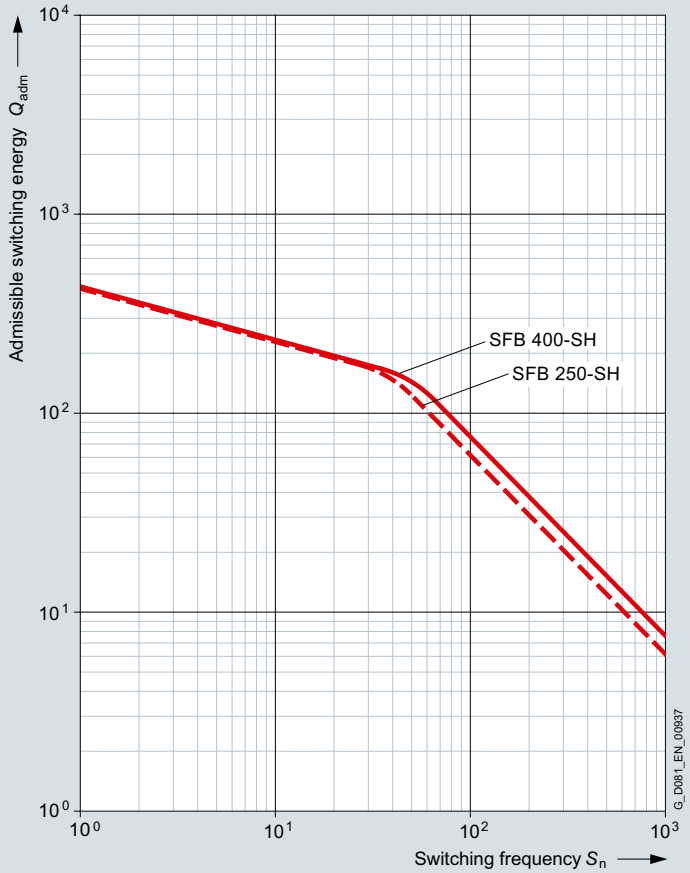

© Siemens AG 2018

Overview (continued)

Overview of brake selection for 1LE5 motors			For motor frame sizes	
			315	355
No. of poles			4 to 8	4 to 8
Flanged end shield NDE brake installation			FF500 (A550) [1]	FF600 (A660) [2]
Max. diameter of 2nd shaft extension			75_{m6}	90_{m6}
Brake type			**SFB 250-SH**	**SFB 400-SH**
Braking torque		Nm	2970	4680
Nominal dynamic braking torque according to VDE 0580		Nm/rpm	3300/54	5200/47
Dynamic braking torque [3]	at 750 rpm	Nm	2400	2100 [4]
	at 1000 rpm	Nm	2200	2300 [4]
	at 1500 rpm	Nm	1850	2100 [4]
	at n_{max}	Nm	1580	2100 [4]
Maximum speed n_{max} – IM B3/V1		rpm	2800	2500
Power at 110 V DC		W	495	553
Power at 230 V AC (207 V DC coil voltage)		W	511	–
Current at 110 V DC		A	4.5	5.03
Current at 230 V AC (207 V DC coil voltage)		A	2.47	–
Current at 400 V AC (180 V DC coil voltage)		A	2.98	3.36
Current at 24 V DC		A	19.93	–
Weight, approx.		kg	306	357
Application time t_1		ms	640	700
Release time t_2		ms	690	1100
Brake moment of inertia		kgm^2	0.14	0.325
Minimum air gap		mm	0.4	0.4
Maximum air gap		mm	2.5	2.5

[1] External dimension increases to 560 mm.

[2] External dimension decreases to 640 mm.

[3] The dynamic braking torque also depends on the load data, temperatures in excess of the maximum admissible lining surface temperatures must be avoided.

[4] Value is guaranteed by the brake manufacturer.
In practice, a higher braking torque can be expected.
Restrictions are determined at the test station of the brake manufacturer.
Information: www.pintschbubenzer.de

© Siemens AG 2018

Overview (continued)

Configuration of motors with brakes

Braking time

The time it takes the motor to come to a standstill comprises two components:
a.) The application time of the brake t_2
b.) The braking time t_{Br}

$$t_{Br} = \frac{J \cdot n_{rated}}{9.55 \cdot (T_B \pm T_L)}$$

t_{Br} Braking time in s
J Total moment of inertia in kgm^2
n_{rated} Rated speed of the motor with brake in rpm
T_B Rated braking torque in Nm
T_L Average load torque in Nm (If T_L supports the braking operation, T_L is positive)

Braking energy per braking operation Q_{adm}

The braking energy per braking operation in Nm comprises the energy of the moments of inertia to be braked Q_{Kin} and the energy Q, which must be applied in order to brake against a load torque:

$Q_{adm} = Q_{Kin} + Q$

a.) The energy of the moments of inertia in Nm

$$Q_{Kin} = \frac{J \cdot n^2_{rated}}{182.4}$$

n_{rated} Rated speed before braking in rpm
J Total moment of inertia in kgm^2. The mass moment of inertia J specified in the formula corresponds to the total moment of inertia of all braked masses referred to the motor/brake speed.

b.) Braking energy on emergency trip

The braking energy for occasional emergency trips must be checked to ensure that it does not cause the brake to overheat. Please refer to table "Technical specifications of brakes" for admissible values. The braking energy produced for traversing gear can be calculated approximately with the following equation:

$$Q = \frac{J_{tot} \cdot n^2_{Br}}{182.4 \cdot 10^3} \cdot \frac{T_{Br}}{T_{Br} \pm T_L}$$

Q Energy capability/braking energy in kJ
T_{Br} Braking torque in Nm
T_L Total of all load torques in Nm referred to the brake (motor) shaft
n_{Br} Speed of brake (motor) shaft in rpm
J_{tot} Total moment of inertia to be braked in kgm^2 reduced to the brake (motor) shaft
T_L is positive if it supports braking (e.g. hoisting a load)
T_L is negative if it counteracts braking (e.g. lowering a load)

The total moment of inertia J_{tot} is the sum of the individual moments of inertia of the system components to be braked, reduced to the brake (motor) shaft, and the moments of inertia of the linear-motion masses. The equivalent mass inertia J_{Eqv} of a linear-motion mass m with velocity v, referred to the brake (motor) speed n_{Br}, is calculated as follows:

$$J_{Eqv} = 91.2 \cdot m \cdot \left(\frac{v}{n_{Br}}\right)^2$$

m Mass of the linear-motion load in kg
v Velocity of the linear-motion load in m/s
n_{Br} Speed of brake (motor) shaft in rpm

The velocity and/or speed to be entered here must equal the maximum values in normal operation. An increase in velocity resulting from wind forces may also need to be taken into account.

Definition of switching times (VDI 2241)

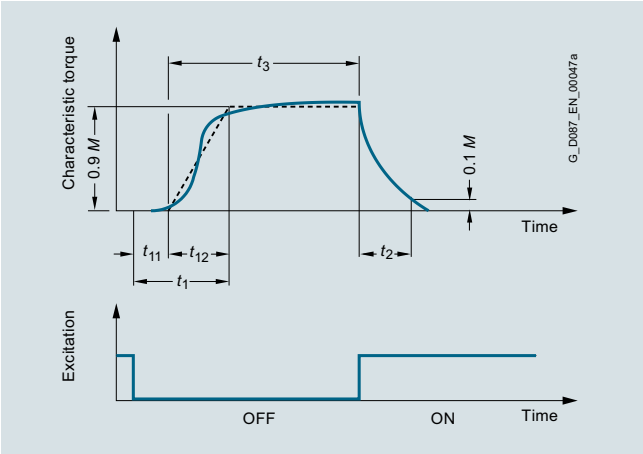

Brake switching times

Switching times:
t_1 Brake application time
t_2 Disconnection time
t_3 Slip time
t_{11} Response delay
t_{12} Rise time

Run-on revolutions U

The number of run-on revolutions U of the motor with brake can be calculated as follows:

$$U = \frac{n_{rated}}{60}\left(t_1 + \frac{t_{Br}}{2}\right)$$

t_1 Brake application time in ms

Lifetime of the brake lining L and readjustment of the air gap

The brake lining wears due to friction which increases the air gap and the release time for the brake at standard excitation.

In order to calculate the lifetime of the brake lining in terms of operations S_{max}, the lifetime of the brake lining L in Nm must be divided by the braking energy Q_{adm}:

$$S_{max} = \frac{L}{Q_{adm}}$$

The interval between adjustments N can be calculated in terms of operations by dividing the braking energy L_N that the brake can output until it is necessary to readjust the working air gap by Q_{adm}:

$$N = \frac{L_N}{Q_{adm}}$$

© Siemens AG 2018

Overview (continued)

FDX spring-operated brake

Motor series

This brake is provided for 1LE1 motors in frame sizes 225 to 315.

Mode of operation of FDX spring-operated brake (holding brake/operating brake)

The FDX solenoid spring-operated brakes (order code **F04**), with IP67 degree of protection, are quiescent current brakes, meaning that the braking torque is produced by spring force and increased by magnetic force in normal operation.

During the braking operation, the built-in compression springs apply pressure to the rotor that interlocks radially with the machine shaft using the axially moving armature disk. In turn, this applies pressure to the opposing side against the friction surface (→ motor label). The braking torque is produced from the linings of the rotor and the armature disk/friction surface being in contact.

During the brake release process, a magnetic force is produced by applying a direct current via the excitation winding in the solenoid. The armature disk is thereby pulled from the solenoid and the rotor is released.

During the manual brake release process (only available for the brake version with manual brake release), the armature disk is pressed mechanically against the solenoid by operating the manual release lever. The brake can therefore still be released in the event of a power failure, for example.

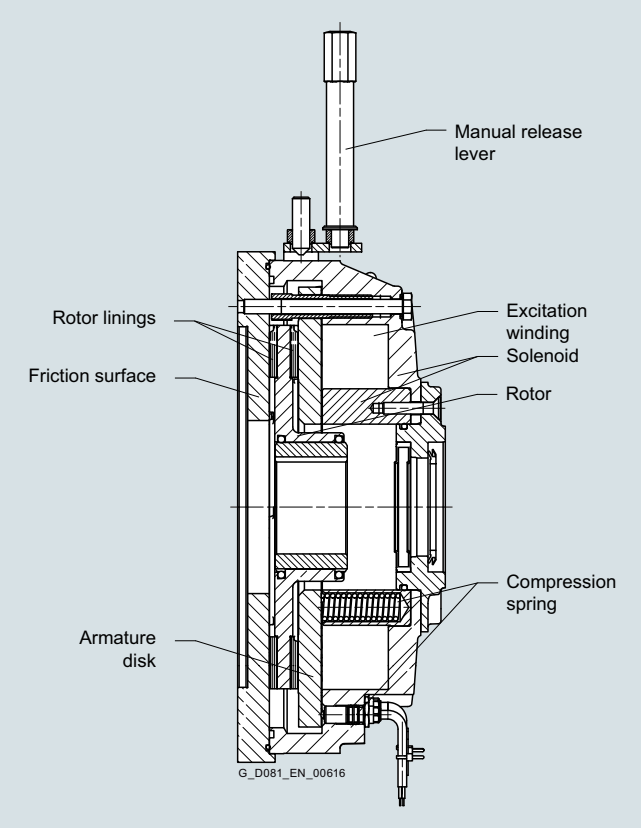

Voltage and frequency

The solenoids and the brake rectifier are designed for connection to the following voltages or can be supplied for the following voltages:

- Brake supply voltage 230 V AC
  Order code **F11**
- Brake supply voltage 400 V AC
  Order code **F12**

When 60 Hz is used, the voltage for the brake must not be increased!

Order codes **F11** and **F12** may only be used in conjunction with order code **F04**.

Connection

Labeled terminals are provided in the main terminal box of the motor to connect the brake.

The AC voltage for the brake excitation winding is connected to the two free terminals of the rectifier block (~).

The brake can be released when the motor is at a standstill by separately exciting the solenoid. In this case, an AC voltage must be connected at the rectifier block terminals. The brake remains released as long as this voltage is present.

The rectifiers are protected against overvoltages by varistors in the input and output circuits. The function and wear can be monitored with microswitches and proximity switches. Microswitch On/Off is standard for 1LE1 motors. Anti-condensation heating is possible as an option.

Mechanical manual brake release with lever

The brake can be supplied with a mechanical manual release with lever.
Order code **F50**

The dimensions of the brake lever depend on the motor frame size and can be read from the dimensional drawing generator for motors in the DT Configurator tool for low-voltage motors.

Lifetime

The amount of frictional energy that can be transferred before the rotor must be replaced depends on various factors:

- Mass to be decelerated
- Switching frequency
- Speed
- Resulting temperature on the friction surfaces

As a result, only guide values can be specified for the frictional energy to be transferred until rotor replacement.

© Siemens AG 2018

Overview (continued)

Abbreviations and definitions used (with their units):

T_{LR} = Motor starting torque (Nm)

T_b = Braking torque (Nm)

T_{breq} = Required braking torque (Nm)

$T_{b,\ rated}$ = Rated torque of the spring-operated brake (Nm)

T_L = Load torque (Nm)

T_{tot} = Total torque (Nm)

F = Force (N)

r = Lever arm (m)

n = Speed (rpm)

K = Safety factor $K \geq 2$

P = Power (kW)

t = Overall braking time (ms)

t_{st} = Startup time (s)

t_B = Braking time (s)

t_2 = Disconnection time (ms)

t_1 = Application time (ms)

t_{11} = Response delay (ms)

P_R = Frictional power (J/s)

W_R = Friction energy (J)

S = Switching cycles (brake operations) per second (Hz)

J_E = Internal moment of inertia (kgm^2)

J_{add} = Additional moment of inertia (kgm^2)

$J_{2.3..}$ = Moment of inertia (kgm^2)

J_{tot} = Total moment of inertia (kgm^2)

n_1 = Motor speed (rpm)

$n_{2.3..}$ = Speeds (rpm)

Multiple moments of inertia with different speeds are converted into a moment of inertia relative to the motor shaft:

$$J_{add} = \frac{J_2 \cdot n_2^2 + J_3 \cdot n_3^2 \cdots}{n_1^2} \ (kgm^2)$$

Torque

A spring-operated brake is designed mainly in accordance with the required braking torque T_{breq}. If the moment of inertia, speed, and admissible braking time of the machine are known, the braking torque of the spring-operated brake can be calculated. If the masses that are to be decelerated by the spring-operated brake are running at a different speed from the shaft decelerated by the spring-operated brake, the moment of inertia of these masses (J_{add}) must be calculated relative to this shaft (see above). In addition, the moment of inertia of the rotor-hub system (J_E) must be taken into account.

Load torque (static loading)

Torque which is present when the system is at a standstill and must be held by the brake. The loading force is converted into the load torque via the relevant lever arm

$T_L = F \cdot r$ (Nm)

Braking torque (dynamic loading)

A purely dynamic load is present when flywheels, rollers, etc., are to be delayed and the static load torque is negligibly small.

The required braking torque is calculated as follows:

$$T_b = 1.046 \cdot 10^2 \cdot J_{tot} \cdot \frac{n}{t - t_1} \ (Nm)$$

$T_{breq} = T_b \cdot K \leq T_{b,\ rated}$ (Nm)

Dynamic and static loading

Most applications involve dynamic loading as well as static load torque:

$$T_{breq} = (T_b \pm T_L) \cdot K \ (Nm)$$

$$T_{breq} = (1.046 \cdot 10^2 \cdot J_{tot} \cdot \frac{n}{t - t_1} \pm T_L) \cdot K \ (Nm)$$

$$T_{breq} \leq T_{b,\ rated} \ (Nm)$$

Sign for T_L:

+ T_L = Load torque is applying force (in the direction of motion)

– T_L = Load torque is applying a decelerating force (opposite to the direction of motion)

If both cases occur, the specific configuration is always adapted to the larger torque.

Approximate determination of T_{breq}

If the moment of inertia is not known and if the input power has been defined, the required braking torque is determined as follows:

$$T_{breq} = 9.55 \cdot 10^3 \cdot \frac{P}{n} \cdot K \leq T_{b,\ rated} \ (Nm)$$

$K \geq 2$

Braking time

General

$$t = 1.046 \cdot 10^2 \cdot J_{tot} \cdot \frac{n}{T_{b,\ rated} \pm T_L} + t_1 \ (ms)$$

Sign for T_L:

– T_L = Load torque is applying force (in the direction of motion)

+ T_L = Load torque is applying a decelerating force (opposite to the direction of motion)

Calculation of the starting and braking time for motors

Startup time for motors with brakes

$$t_{st} = J_{tot} \cdot \frac{n_1}{9.55 \cdot (T_{LR} \pm T_L)} + \frac{t_2}{1000} \ (s)$$

$J_{tot} = J_E + J_{add}$ (kgm^2)

Sign for T_L:

+ T_L = Load torque is applying force (in the direction of motion)

– T_L = Load torque is applying a decelerating force (opposite to the direction of motion)

© Siemens AG 2018

Overview (continued)

Braking time for motors with brakes

$$t_B = J_{tot} \cdot \frac{n_1}{9.55 \cdot (T_{b,\,rated} \pm T_L)} + \frac{t_1}{1000} \quad (s)$$

Sign for T_L:

– T_L = Load torque is applying force (in the direction of motion)

+ T_L = Load torque is applying a decelerating force (opposite to the direction of motion)

Thermal load

When braking, friction energy is applied during the slip phase, which releases thermal energy.

Friction energy per braking operation

$$W_R = J_{tot} \cdot n^2 \cdot \frac{T_{b,\,rated}}{182.5 \cdot (T_{b,\,rated} \pm T_L)} \quad (J)$$

Sign for T_L:

– T_L = Load torque is applying force (in the direction of motion)

+ T_L = Load torque is applying a decelerating force (opposite to the direction of motion)

The friction energy per braking operation must be no greater than the admissible value W_{Rmax}

$W_R \leq W_{Rmax}$ (J)

Frictional power

$P_R = W_R \cdot S$ (J/s)

The friction energy must be no greater than the admissible value P_{Rmax}

$P_R \leq P_{Rmax}$ (J/s)

Connection

Load rating of the rectifier diodes as a function of the ambient temperature:

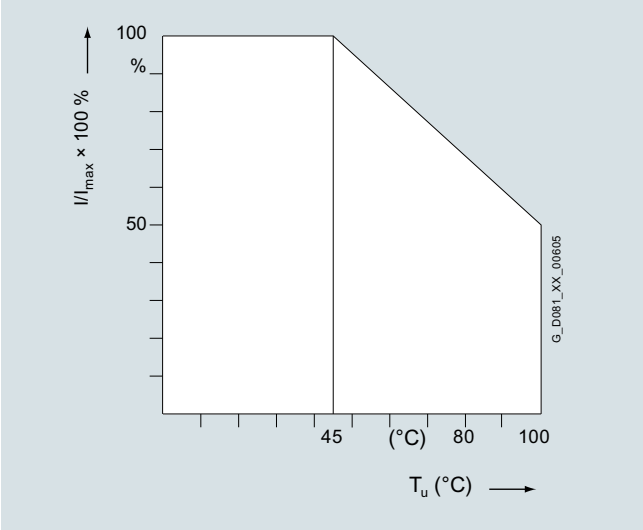

Block diagram:

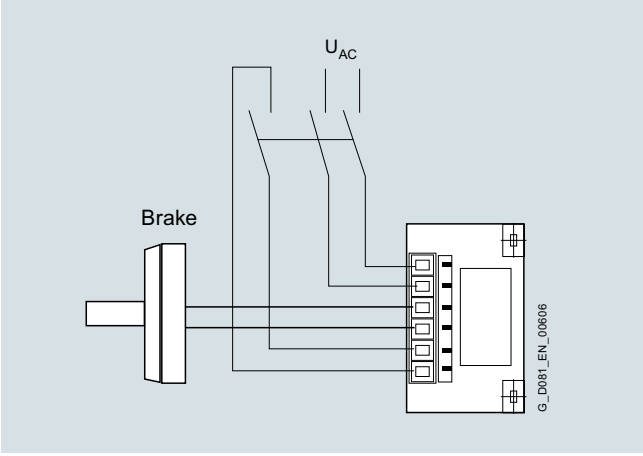

The high-speed rectifier performs the following functions:

- The coil is first supplied with a voltage $U_2 = 0.9 \times U_1$: Over-excitation of the brake
- After excitation time t_1 the voltage is reduced to $U_3 = 0.45 \times U_1$: Non-release voltage of the brake

Designation	Supply voltage (V AC)	Output voltage (V DC)		Ambient temperature
Article No.:	U_1 at 50/60 Hz	U_2	U_3	°C
PMG 480	215 … 500	0.9 × U_1	0.45 × U_1	–15 … +80

© Siemens AG 2018

Overview (continued)

Maximum admissible speeds

The maximum admissible speeds from which emergency stops can be made are listed in the next table. These speeds should be considered as guide values and must be checked for the specific operating conditions.

The maximum admissible friction energy depends on the switching frequency and is shown for the individual brakes in the following diagram. Increased wear can be expected when the brakes are used for emergency stops.

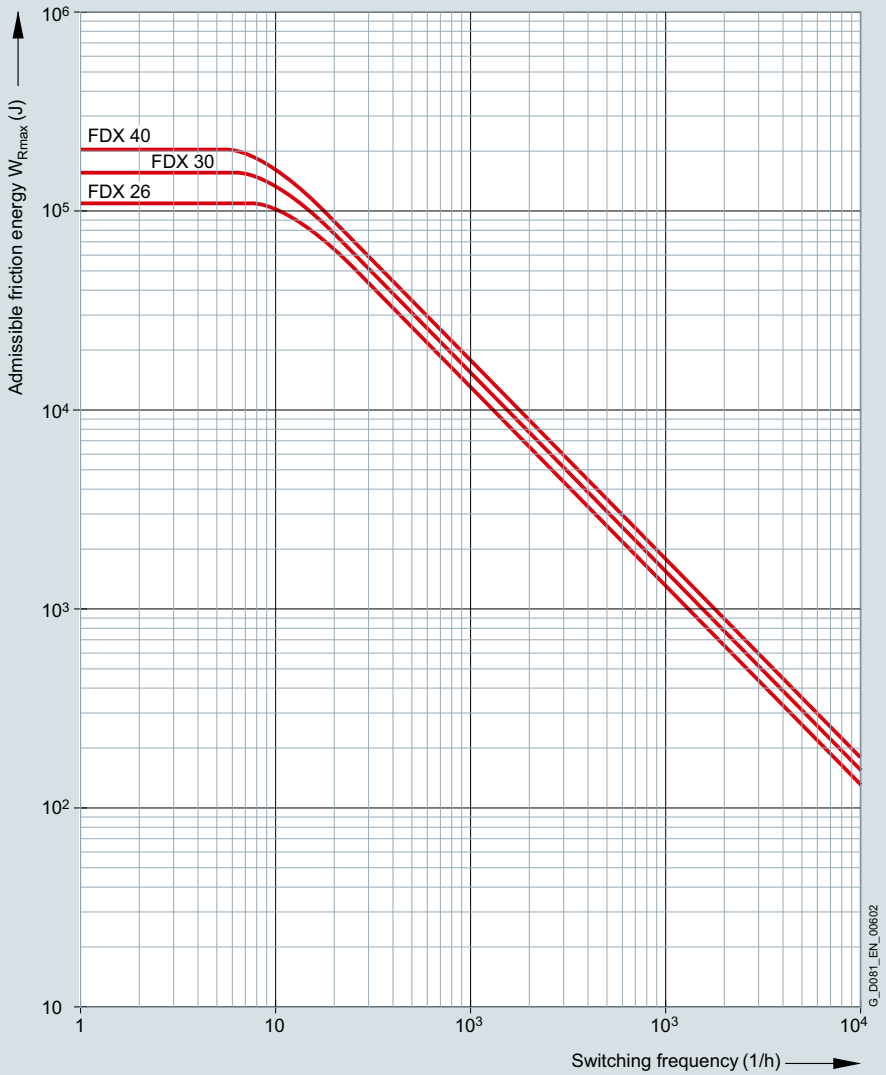

© Siemens AG 2018

Overview (continued)

Overview of brake selection for 1LE1 motors (option F04)			For motor frame sizes			
			225	250	280	315
No. of poles			2 to 8	2 to 8	2 to 8	2 to 8
Flange bearing plate for brake mounting on the NDE side			A350	A400	A450	A535
Max. diameter for the second shaft extensions			55m6	48m6	65m6	48m6
Brake type			**FDX 30**	**FDX 30**	**FDX 40**	**FDX 40**
Static braking torque		Nm	450	567	900	1440[1]
Dynamic rated braking torque acc. to DIN VDE 0580		Nm/rpm	500/88	630/88	1000/65	1600[1]/65
	at 750 rpm	Nm	480	600	800	1200[1]
	at 1000 rpm	Nm	460	580	740	1150[1]
	at 1500 rpm	Nm	460	580	740	1150[1]
	at 3000 rpm	Nm	380	480	600	860[1]
Admissible speed n_{max}		rpm	3000[2]/6000[3]	3000[2]/6000[3]	3000[2]/6000[3]	3000[2]/6000[3]
Power at 180 V DC		W	880/220	880/220	1080/270	1080/270
Power at 103 V DC		W	560/140	560/140	560/140	560/140
Rated current at 230 V AC (103 V DC coil voltage)		A	2.72/1.36	2.72/1.36	2.72/1.36	2.72/1.36
Rated current at 400 V AC (180 V DC coil voltage)		A	2.44/1.22	2.44/1.22	3/1.5	3/1.5
Weight, approx.		kg	45	45	80	80
Closing time t_1 (switching on the DC side)		ms	60	60	160	160
Release time t_2 (switching on the DC side)		ms	140	140	320	320
Brake moment of inertia		kgm^2	0.0195	0.0195	0.0445	0.0445
Lifetime L of brake lining		$Nm \cdot 10^6$	3700	3700	4900	4900

[1] Limit: ON time S3 -50 %
[2] Operating brake
[3] Holding brake

© Siemens AG 2018

Overview (continued)

1XP8 012 rotary pulse encoder

The rotary pulse encoder can be supplied already mounted in an HTL version as **1XP8 012-10** with order code **G01** or in a TTL version as **1XP8 012-20** with order code **G02**. In combination with the separately driven fan, rotary pulse encoders are supplied with a plug connector externally. The rotary pulse encoder can only be mounted on a standard non-drive end (NDE), i.e. a second shaft extension cannot be supplied.

The encoder can be retrofitted. The motor must be prepared for this. When the motor is ordered, the option "Prepared for mountings, center hole only" order code **G40** or the option "Prepared for mountings with shaft D12" order code **G41** must be specified (see "Mechanical version and degrees of protection" on page 1/79).

Attaching the rotary encoder increases the length of the motor by dimension ΔI. For an explanation of the additional dimensions and weights, see "Special technology" "Dimensions and weights" from page 1/106. The rotary pulse encoders of "Modular technology" and "Special technology" are fitted as standard with a protective cover made of non-corrosive sheet steel.

Mounting of encoder for temperatures below –20 °C and higher than +40 °C available on request.

Technical specifications of rotary pulse encoders	**1XP8 012-10** (HTL version)	**1XP8 012-20** (TTL version)
Supply voltage U_B	+10 V to +30 V	5 V ±10 %
Current input without load	150 mA	120 mA
Admissible load current per output	max. 100 mA	max. 20 mA
Pulses per revolution	1024	1024
Outputs	2 square-wave pulses A, B – 2 inverted square-wave pulses A, B Zero pulse and inverted zero pulse	
Pulse offset between the two outputs	90°	90°
Output amplitude	$U_{High} = U_B - 2.5$ V $U_{Low} = 1.6$ V	$U_{High} > 2.5$ V $U_{Low} < 0.5$ V
Edge interval	≥ 0.43 µs	≥ 0.43 µs
Sampling rate	≤ 300 kHz	≤ 300 kHz
Maximum speed	6000 rpm	6000 rpm
Transport/storage temperature range	–30 to +80 °C	–30 to +80 °C
Operating temperature range flange socket or fixed cable	–40 to +100 °C	–40 to +100 °C
Operating temperature range flexible cable	–10 to +100 °C	–10 to +100 °C
Degree of protection	IP66	IP66
Maximum admissible radial cantilever force	60 N	60 N
Maximum admissible axial force	40 N	40 N
Connection system	12-pin connector (mating connector is supplied)	
Certifications	CSA, UL	CSA, UL
Weight	0.3 kg	0.3 kg

© Siemens AG 2018

Overview

"Special technology" comprises rotary pulse encoders of 1LE1 motors (with the exception of 1LE1 with order code **F90** – version "Forced-air cooled motors without external fan and fan cover" and 1PC1).
1LE1 motors with order codes **F70** (mounting of separately driven fan), **F01** (mounting of holding brake (standard arrangement)) and **F01** + **F70** (mounting of brake and separately driven fan) from the modular mounting concept can be combined with rotary pulse encoders LL 861 900 220, HOG 9 DN 1024 I and HOG 10 D 1024 I from the "Special technology" range.
The length of the motor increases by ΔI when the rotary pulse encoder is mounted. For an explanation of the additional dimensions and weights, please refer to "Mounting technology", "Dimensions and weights" from page 1/106.

The rotary pulse encoders of "Modular technology" and "Special technology" are fitted as standard with a protective cover made of non-corrosive sheet steel.

For mounting of rotary pulse encoders with order codes **G01** and **G02** for frame sizes 80 to 315, a protective cover is supplied as standard, with order codes **G04**, **G05**, and **G06** up to frame size 200.

For frame size 180 and above, a protective cover is not supplied as standard when rotary pulse encoders are mounted for order codes **G04**, **G05**, **G06**, **G07** and **G08**.

For mounting of rotary pulse encoders with order codes **G01**, **G02**, **G11**, **G12** + **F70** (mounting of separately driven fan): The cable end is connected to a connector that is located outside the fan cover. The fan cover does not have to be removed to connect the rotary pulse encoder. The rotary pulse encoder can be connected to the main terminal box or an auxiliary terminal box where necessary.

For mounting of rotary pulse encoders with order codes **G04**, **G05**, **G06** + **F70** (mounting of separately driven fan):

- Up to frame size 200, the fan cover has to be removed to connect the rotary pulse encoder. The rotary pulse encoder can also be connected to the main terminal box or an auxiliary terminal box where necessary.
- As of frame size 225, the fan cover does not have to be removed to connect the rotary pulse encoder. The rotary pulse encoder can be connected to the main terminal box and can be connected to the auxiliary terminal box where necessary.

LL 861 900 220 rotary pulse encoder

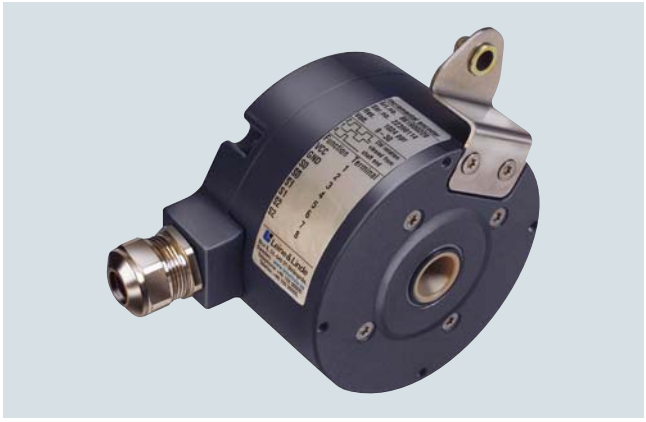

With its rugged construction, this rotary pulse encoder is also suitable for difficult operating environments. It is resistant to shock and vibration and has insulated bearings.

The LL 861 900 220 rotary pulse encoder can be supplied already mounted.
Order code **G04**

*The LL 861 900 220 rotary pulse encoder can be retrofitted. The motor must be prepared for this. When the motor is ordered, the option "Prepared for mountings, center hole only", order code **G40**, or the option "Prepared for mountings with shaft D16", order code **G42**, must be specified (see "Mechanical version and degrees of protection" on page 1/79). The rotary pulse encoder is not part of the scope of supply in this case.*

The version of the rotary pulse encoder with a diagnostics system (ADS) can be supplied by Leine and Linde.

Manufacturer:
Leine und Linde AG
Olivehällsvägen 8
SE-64542 Strängnäs
Phone +46 152 265 00
Fax +46 152 265 05

www.leinelinde.com
Email: info@leinelinde.se

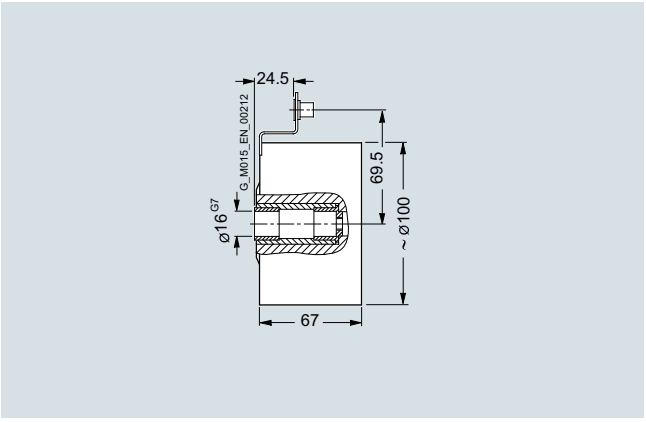

Mounting dimensions of LL 861 900 220 rotary pulse encoder

Technical specifications for LL 861 900 220 (HTL version)

Mounting of encoder for temperatures below –20 °C and higher than +40 °C available on request.

Supply voltage U_B	**+9 V to +30 V**
Current input without load	max. 80 mA
Admissible load current per output	40 mA
Pulses per revolution	1024
Outputs	6 short-circuit proof square-wave pulses A, A', B, B', 0, 0'
Pulse offset between the two outputs	90° ±25° el.
Output amplitude	U_{High} > 20 V U_{Low} < 2.5 V
Mark space ratio	1:1 ±10 %
Edge steepness	50 V/µs (without load)
Maximum frequency	100 kHz for 350 m cable
Maximum speed	4000 rpm
Temperature range	–20 to +80 °C
Degree of protection	IP65
Maximum adm. radial cantilever force	300 N
Maximum adm. axial force	100 N
Connection system	Terminal strips in encoder cable connection M20 × 1.5 radial
Weight	approx. 1.3 kg

© Siemens AG 2018

Overview (continued)

HOG 9 DN 1024 I rotary pulse encoder

The encoder is fitted with insulated bearings.

The HOG 9 DN 1024 I rotary pulse encoder can be supplied already mounted.
Order code **G05**

The HOG 9 DN 1024 I rotary pulse encoder can be retrofitted. The motor must be prepared for this. When the motor is ordered, the option "Prepared for mountings, center hole only", order code ***G40,*** *or the option "Prepared for mountings with shaft D16", order code* ***G42****, must be specified (see "Mechanical version and degrees of protection" on page 1/79). The rotary pulse encoder is not part of the scope of supply in this case.*

Manufacturer:
Baumer Hübner GmbH
Max-Dohrn-Str. 2+4
10589 Berlin, Germany
Phone +49 (30) 69003-0
Fax +49 (30) 69003-104

www.baumerhuebner.com
Email: info@baumerhuebner.com

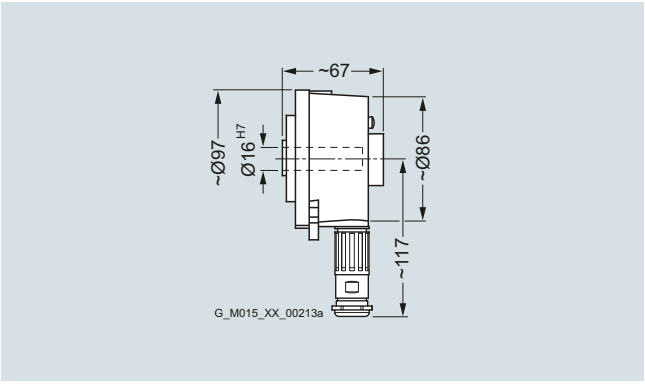

Mounting dimensions of HOG 9 DN 1024 I rotary pulse encoder

Technical specifications for HOG 9 DN 1024 I (HTL version)

Mounting of encoder for temperatures below –20 °C and higher than +40 °C available on request.

Supply voltage U_B	**+9 V to +30 V**
Current input without load	50 to 100 mA
Admissible load current per output	150 mA, 800 mA peak
Pulses per revolution	1024
Outputs	6 short-circuit-proof square-wave pulses A+, A-, B+, B-, R+, R-
Pulse offset between the two outputs	90° ±20 %
Output amplitude	$U_{High} \geq U_B - 3.5$ V $U_{Low} \leq 1.5$ V
Mark space ratio	1:1 ±20 %
Edge steepness	10 V/µs
Maximum frequency	120 kHz
Maximum speed	7000 rpm
Temperature range	–30 to +100 °C
Degree of protection	IP56
Maximum adm. radial cantilever force	500 N
Maximum adm. axial force	400 N
Connection system	M23 flange socket, radial (mating connector is part of the scope of supply)
Mech. version acc. to Baumer Hübner Ident. No.	73 522 B
Weight	approx. 0.9 kg

© Siemens AG 2018

Overview (continued)

POG 9 rotary pulse encoder

The POG 9 rotary pulse encoder can be supplied already mounted.
Order code **G08**

*The POG 9 rotary pulse encoder can be retrofitted. The motor must be prepared for this. When the motor is ordered, the option "Prepared for mountings, center hole only", order code **G40**, or the option "Prepared for mountings with shaft D16", order code **G42**, must be specified (see "Mechanical version and degrees of protection" on page 1/79). The rotary pulse encoder is not part of the scope of supply in this case.*

Manufacturer:
Baumer Hübner GmbH
Max-Dohrn-Str. 2+4
10589 Berlin, Germany
Phone +49 (30) 69003-0
Fax +49 (30) 69003-104

www.baumerhuebner.com
Email: info@baumerhuebner.com

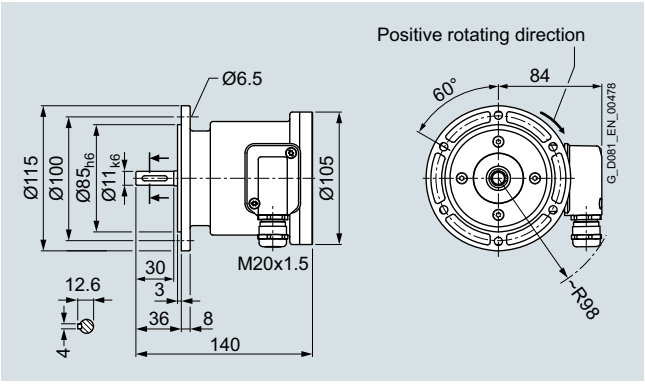

Mounting dimensions of POG 9 rotary pulse encoder

Technical specifications for POG 9

Mounting of encoder for temperatures below –20 °C and higher than +40 °C available on request.

Supply voltage U_B	**+9 V to +30 V**	**+5 V ±5 %**
Current input without load	< 100 mA	
Admissible load current per output	60 mA average 300 mA peak	25 mA average 75 mA peak
Pulses per revolution	300 … 2500	
Output amplitude	$U_{High} \geq U_B - 3.5$ V $U_{Low} \leq 1.5$ V	$U_{High} \geq 2.5$ V $U_{Low} \leq 0.5$ V
Mark space ratio	1:1 ±20 %	
Operating speed	≤ 12000 rpm	
Switching rate	120 kHz	
Temperature range	–30 to +100 °C	
Degree of protection	IP56	
Maximum adm. radial cantilever force	150 N	
Maximum adm. axial force	80 N	
Connection system	Terminal box	
Weight	approx. 1.4 kg	

© Siemens AG 2018

Overview (continued)

POG 10 rotary pulse encoder

The POG 10 rotary pulse encoder can be supplied already mounted.
Order code **G07**

*The POG 10 rotary pulse encoder can be retrofitted. The motor must be prepared for this. When the motor is ordered, the option "Prepared for mountings, center hole only", order code **G40**, or the option "Prepared for mountings with shaft D16", order code **G42**, must be specified (see "Mechanical version and degrees of protection" on page 1/79). The rotary pulse encoder is not part of the scope of supply in this case.*

Manufacturer:
Baumer Hübner GmbH
Max-Dohrn-Str. 2+4
10589 Berlin, Germany
Phone +49 (30) 69003-0
Fax +49 (30) 69003-104

www.baumerhuebner.com
Email: info@baumerhuebner.com

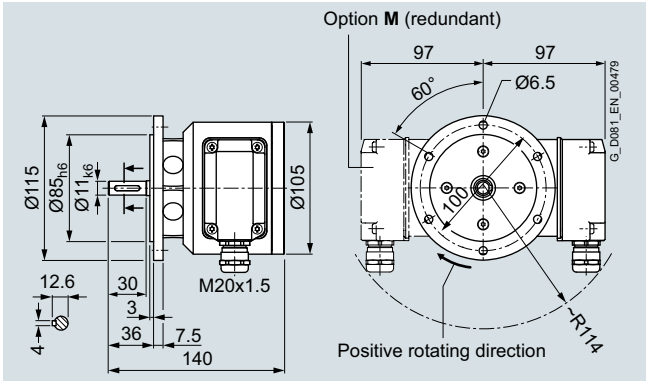

Mounting dimensions of POG 10 rotary pulse encoder

Technical specifications for POG 10

Mounting of encoder for temperatures below –20 °C and higher than +40 °C available on request.

Supply voltage U_B	**+9 V to +30 V**	
Current input without load	< 100 mA	
Admissible load current per output	60 mA average 300 mA peak	25 mA average 75 mA peak
Pulses per revolution	300 … 2500	
Mark space ratio	40:60 … 60:40	
Operating speed	≤ 12000 rpm	
Switching rate	120 kHz	
Temperature range	–40 to +100 °C	
Degree of protection	IP66	
Maximum adm. radial cantilever force	≤ 450 N	
Maximum adm. axial force	≤ 300 N	
Connection system	Terminal box	
Weight	approx. 1.9 kg	

© Siemens AG 2018

Overview (continued)

HOG 10 D 1024 I rotary pulse encoder

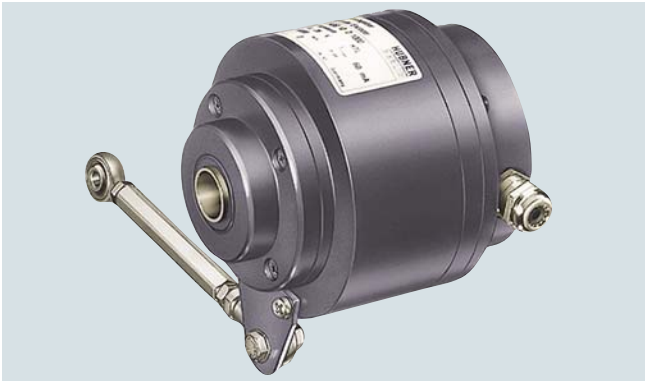

This encoder is extremely rugged and is therefore suitable for difficult operating conditions. It is fitted with insulated bearings.

The HOG 10 D 1024 I rotary pulse encoder can be supplied already mounted.
Order code **G06**

The HOG 10 D 1024 I rotary pulse encoder can be retrofitted. The motor must be prepared for this. When the motor is ordered, the option "Prepared for mountings, center hole only", order code ***G40,*** *or the option "Prepared for mountings with shaft D16", order code* ***G42****, must be specified (see "Mechanical version and degrees of protection" on page 1/79). The rotary pulse encoder is not part of the scope of supply in this case. The letters FSL and ESL stand for the following terms:*
FSL: (mechanical) centrifugal switch
ESL: electronic speed switch
Both switch types are suitable for tripping the motor when a critical limit speed is reached, or for accelerating the motor along a control ramp into the permissible speed range again, or for shutting down the motor completely (depending on the customer application).
The electronic speed switch is particularly suitable for converter operation.
The critical limit rotational speed to be monitored for the customer's application must be specified in the order.
Further settings might also be necessary. These settings will be made at the Baumer & Hübner factory according to customer specifications.

Manufacturer:
Baumer Hübner GmbH
Max-Dohrn-Str. 2+4
10589 Berlin, Germany
Phone +49 (30) 69003-0
Fax +49 (30) 69003-104

www.baumerhuebner.com
Email: info@baumerhuebner.com

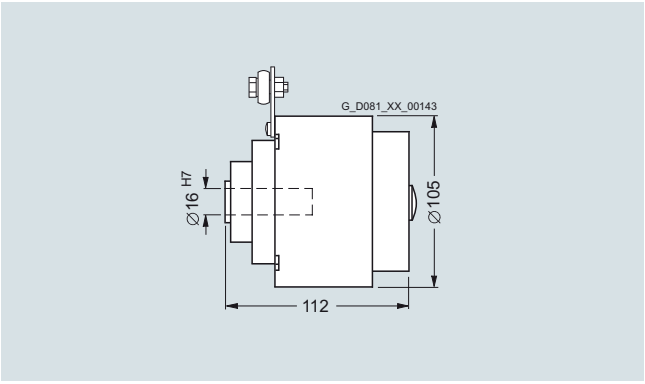

Mounting dimensions of HOG 10 D 1024 I rotary pulse encoder

Technical specifications for HOG 10 D 1024 I (HTL version)

Mounting of encoder for temperatures below –20 °C and higher than +40 °C available on request.

Supply voltage U_B	**+9 V to +30 V**
Current input without load	approx. 100 mA
Admissible load current per output	600 mA, 300 mA peak
Pulses per revolution	1024
Outputs	4 short-circuit proof square-wave pulses A, B and A', B'
Pulse offset between the two outputs	90° ±20 %
Output amplitude	$U_{High} \geq U_B - 3.5$ V $U_{Low} \leq 1.5$ V
Mark space ratio	1:1 ±20 %
Edge steepness	10 V/µs
Maximum frequency	120 kHz
Maximum speed	7000 rpm
Temperature range	–40 to +100 °C
Degree of protection	IP66
Maximum adm. radial cantilever force	150 N
Maximum adm. axial force	80 N
Connection system	Terminals, cable connection M20 × 1.5
Mech. version acc. to Baumer Hübner Ident. No.	74 055 B
Weight	approx. 1.6 kg

© Siemens AG 2018

Overview (continued)

Sendix 5020 rotary pulse encoder

The Sendix 5020 rotary pulse encoder can be ordered completely assembled as an HTL version with order code **G11** or as a TTL version with order code **G12**.

Features of the **G11** and **G12** encoders:

- Use of insulation to avoid surge currents
- Safety-lock technology for high resistance to vibrations, shaft loads, and installation errors
- Cable lengths available up to 300 m

In combination with a separately driven fan, the rotary pulse encoders are supplied with an external plug connection. The rotary pulse encoder can only be attached to a standard NDE shaft extension, meaning that a second shaft extension will not be available.

*The encoder can be retrofitted. When the motor is ordered, the option "Prepared for mountings, center hole only" order code **G40** or the option "Prepared for mountings with D12 shaft" order code **G41** must be specified.*

The dimensions of the motor are increased by Δl by mounting the rotary pulse encoder. The "Modular technology" and "Special technology" rotary pulse encoders are fitted with a protective cover made from corrosion-resistant sheet metal as standard. Mounted encoders for temperatures below –20 °C and above +40 °C are available on request.

Technical specifications for Sendix 5020 (HTL/TTL version)

	Sendix 5020 (HTL version)	Sendix 5020 (TTL version)
Supply voltage	10 … 30 V DC	5 V DC ± 5 %
Energy consumption with inverted signal (no-load operation)	max. 100 mA	max. 90 mA
Admissible load/channel	max. ± 40 mA	max. ± 20 mA
Pulses per revolution	1024 (2048; 512)	
Outputs	2 square-wave pulses A, B – 2 inverted square-wave pulses A, B	
Pulse offset between the two outputs	90°	
Signal level	U_{High} = min. U_B – 1 V U_{Low} = max. 0.5 V	U_{High} = min. 2.5 V
Edge rise time t_r	max. 1 µs	max. 200 µs
Edge fall time t_f	max. 1 µs	max. 200 µs
Pulse frequency	max. 300 kHz	
Maximum speed	12000 rpm/6000 rpm (continuous)	
Working temperature range	–40 [1] … +100 °C	
Degree of protection acc. to EN 60529	IP65	
Maximum admissible radial cantilever force	100 N	
Maximum admissible axial force	50 N	
Connection system	12-pin M23 connector (mating connectors are always supplied)	
Certificates	UL, CSA (ATEX on request)	
Weight	0.4 kg	
Explosion protection certificate for explosive areas	Available on request for Zones 2 and 22	
Shock resistance acc. to EN 60068-2-27	3000 m/s^2, 6 ms	
Vibration resistance acc. to EN 60068-2-6	300 m/s^2, 10 … 2000 Hz	

Manufacturer:
Fritz Kübler GmbH
Schubertstrasse 47
78054 Villingen-Schwenningen, Germany
Phone +49 (7720) 3903-0
Fax +49 (7720) 21564

www.kuebler.com/drehgeber
Email: info@kuebler.com

[1] With connector: –40 °C, permanently installed cable: –30 °C, moving cable: –20 °C.

© Siemens AG 2018

Overview (continued)

Backstop, counterclockwise/clockwise motion blocked

The backstop (order code F40/F41) prevents the motor from moving while in de-energized state against its direction of rotation in the energized state.

The backstop is only available for SIMOTICS SD – 1LE15/1LE16, VSD10, VSD4000 motors.

- Counterclockwise motion blocked: Option **F40**
- Clockwise motion blocked: Option **F41**

Frame size	Order code	
	F40	**F41**
	Δl	Δl
	mm	mm
71	–	–
80	–	–
90	–	–
100	–	–
112	–	–
132	114	114
160	130	130
180	126	126
200	137	137
225	172	172
250	96	96
280	104	104
315	105	105

Protective cover diameter

Frame size	Protective cover for separately driven fan	Protective cover	Protective cover for encoder		Protective cover for encoder adapter	Protective cover
		H00	**G01/G02**	**G04 … G06**	**G41/G42**	**F75**
	mm	mm	mm	mm	mm	mm
71	140	125	125	–	–	–
80	157	155	155	–	155	160
90	177	155	155	–	155	180
100	210	195	195	195	195	195
112	249	195	195	195	195	195
132	300	260	260	260	260	260
160	338	260	260	260	260	260
180	340	340	340	340	340	340
200	338	340	340	340	340	340
225	470	425	165	250	165	–
250	470	470	165	250	165	–
280	525	525	165	250	165	–
315	590	525	165	250	165	–

© Siemens AG 2018

Overview

Dimensions and weights

Fig. 1 Brake,
order codes **F01/F04**
[optionally with manual release, order code **F50**]

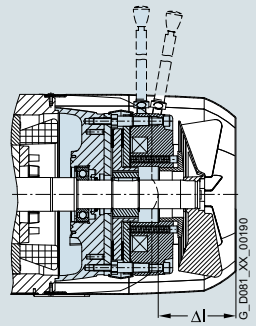

Fig. 2 Rotary pulse encoder (on cover),
order code **G01/G02/G04/G05/G06/G11/G12**
[**G01**, **G02, G11, G12** protective cover as standard]

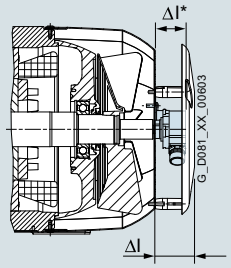

Frame size	Assignment Fig. 1 Brake Order codes F01/F04 ΔI mm	Weight, approx. kg	Fig. 2 Rotary pulse encoder including protective cover (G43) 1XP8 012 Order codes G01/G02 ΔI mm	Weight, approx. kg	LL 861 900 220 Order code G04 ΔI mm	Weight, approx. kg	HOG 9 DN 1024 I Order code G05 ΔI mm	Weight, approx. kg	HOG 10 D 1024 I Order code G06 ΔI mm	Weight, approx. kg	Sendix 5020 Order codes G11/G12 ΔI mm	Weight, approx. kg
1LE1												
80	60	3.5	68.5	0.7	–	–	–	–	–	–	–	–
90	77.5	5.3	68.5	0.7	–	–	–	–	–	–	–	–
100	81	5.9	56	0.9	83	1.9	83	1.5	126	2.2	–	–
112	88	7.8	56	0.8	83	1.9	83	1.5	126	2.2	–	–
132	114	11.9	60	1.3	87	2.4	87	2	130	2.7	–	–
160	130	30.7	60	1.5	87	2.7	87	2.3	130	3	–	–
180	126	28	87	2.1	136.5	2.3	136.5	1.9	136.5	2.6	–	–
200	137	38	87	2.3	136.5	2.5	136.5	2.1	136.5	2.8	–	–
225	135/199	63/49	87	0.9	135	2	135	1.6	135	2.3	87	1
250	225/185	83/54	87	0.9	135	2	135	1.6	135	2.3	87	1
280	297/192	118/92	87	0.9	135	2	135	1.6	135	2.3	87	1
315	308/188	256/167	87	0.9	135	2	135	1.6	135	2.3	87	1
1LE5												
315	309	355	87	0.9	135	2	135	1.6	135	2.3	87	1
355	324	425	87	0.9	135	2	135	1.6	135	2.3	87	1

Frame size	Assignment Fig. 2 Rotary pulse encoder without protective cover 1XP8 012 Order codes G01/G02 ΔI* mm	Weight, approx. kg	LL 861 900 220 Order code G04 ΔI* mm	Weight, approx. kg	HOG 9 DN 1024 I Order code G05 ΔI* mm	Weight, approx. kg	HOG 10 D 1024 I Order code G06 ΔI* mm	Weight, approx. kg	Sendix 5020 Order codes G11/G12 ΔI* mm	Weight, approx. kg
1LE1										
225	51	0.3	75	1.3	72	0.9	116	1.6	65	0.4
250	51	0.3	75	1.3	72	0.9	116	1.6	65	0.4
280	51	0.3	75	1.3	72	0.9	116	1.6	65	0.4
315	51	0.3	75	1.3	72	0.9	116	1.6	65	0.4

© Siemens AG 2018

Overview (continued)

Fig. 3 Brake and rotary pulse encoder (on cover), order codes **F01/F04 + G01/G02/G04/G05/G06/G11/G12** [optionally with manual release, order code **F50**; **G01**, **G02, G11, G12** protective cover as standard]

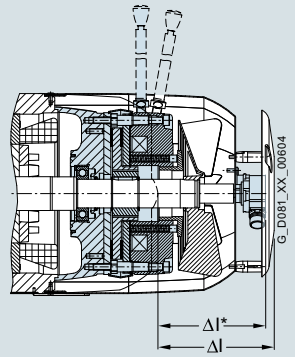

Fig. 4 Separately driven fan, order code **F70**

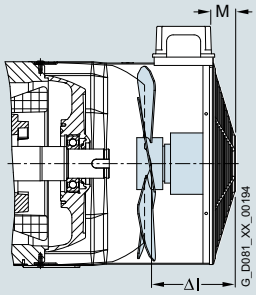

Frame sizes 100 to 200

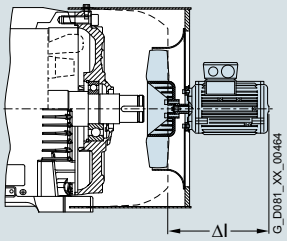

Frame sizes 225 to 315

Frame size	Assignment Fig. 3 Brake and rotary pulse encoder (on cover) 1XP8 012 Order codes F01 + G01/G02 ΔI	Weight, approx.	LL 861 900 220 Order codes F01 + G04 ΔI*	Weight, approx.	HOG9 D 1024 I Order codes F01 + G05 ΔI*	Weight, approx.	HOG10 D 1024 I Order codes F01 + G06 ΔI*	Weight, approx.	Sendix 5020 Order codes F01 + G11/G12 ΔI	Weight, approx.	Fig. 4 Separately driven fan Order code F70 ΔI	M	Weight, approx.
	mm	kg	mm	kg	mm	kg	mm	kg	mm	kg	mm	mm	kg
1LE1													
71	–	–	–	–	–	–	–	–	–	–	75	30	1.9
80	128.5	4.2	–	–	–	–	–	–	–	–	88	10	1.9
90	146	6	–	–	–	–	–	–	–	–	104	20	2.5
100	137	6.8	164	7.8	164	7.4	207	8.1	–	–	86.5	30	2.6
112	144	8.6	171	9.7	171	9.3	214	10	–	–	81.5	30	2.9
132	174	13.2	201	14.3	201	13.9	244	14.6	–	–	116	40	3.9
160	190	32.2	217	33.4	217	33	260	33.7	–	–	135.5	40	5.6
180	216	30.1	216	30.3	216	29.9	252	30.6	–	–	257	40	8.3
200	228	40.3	228	40.5	228	40.1	264	40.8	–	–	262	40	9.3
225	186	63.3	210	64.3	207	64.2	251	63.9	186	63.4	221	–	22
250	276	83.3	300	84.3	297	84.2	341	83.9	276	83.4	226	–	25
280	348	118.3	372	119.3	369	119.2	413	118.9	348	118.4	222	–	28
315	359	255.3	383	256.3	380	256.2	424	255.9	359	256.4	236[1]	–	36[1]
315	–	–	–	–	–	–	–	–	–	–	276[2]	–	38.8[2]
1LE5													
315 2-pole	396	355.9	444	357	444	356.6	444	357.3	396	356	275	–	37.6
4-pole											235	–	35.3
355	411	425	459	427	459	426.6	459	427.3	411	426	248	–	27.5

Frame size	Assignment Fig. 3 Brake and rotary pulse encoder (on cover) 1XP8 012 Order codes F04 + G01/G02 ΔI	Weight, approx.	LL 861 900 220 Order codes F04 + G04 ΔI	Weight, approx.	HOG9 D 1024 I Order codes F04 + G05 ΔI	Weight, approx.	HOG10 D 1024 I Order codes F04 + G06 ΔI	Weight, approx.	Sendix 5020 Order codes F04 + G11/G12 ΔI	Weight, approx.
	mm	kg	mm	kg	mm	kg	mm	kg	mm	kg
1LE1										
225	285.5	49.3	274	50.3	271	49.9	315	50.6	285.5	49.4
250	271.5	54.3	260	55.3	257	54.9	301	55.6	271.5	54.4
280	278.5	92.3	267	93.3	264	92.9	308	93.6	278.5	92.4
315	274.5	167.3	263	168.3	260	167.9	304	168.6	274.5	167.4

[1] Valid for 4-pole, 6-pole, and 8-pole motors

[2] Valid for 2-pole motors

© Siemens AG 2018

Overview (continued)

Fig. 5 Brake and separately driven fan, order codes **F01/F04 + F70** [optionally with manual release, order code **F50**]

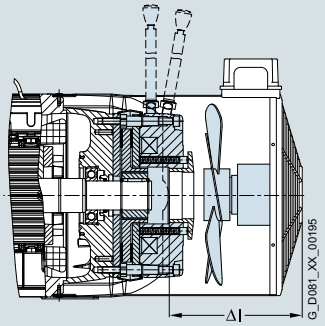

Frame sizes 100 to 200

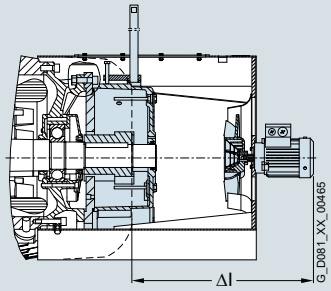

Frame sizes 225 to 355

Fig. 6 Rotary pulse encoder (under cover) and separately driven fan, order codes **F70 + G01/G02/G04/G05/G06/G11/G12**

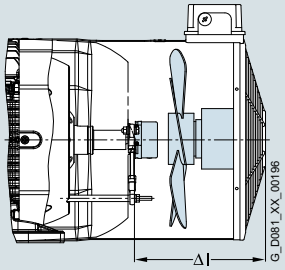

Frame sizes 100 to 200

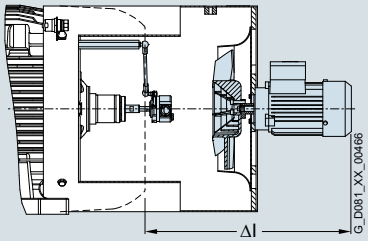

Frame sizes 225 to 355

Assignment

Frame size	**Fig. 5** Brake and separately driven fan				**Fig. 6** Separately driven fan and rotary pulse encoder (under cover)									
	Order codes **F01 + F70**		Order codes **F04 + F70**		Order codes **F70 + G01/G02**		Order codes **F70 + G04**		Order codes **F70 + G05**		Order codes **F70 + G06**		Order codes **F70 + G11/G12**	
	ΔI	Weight, approx.	ΔI	Weight, approx.	ΔI	Weight, approx.	ΔI	Weight, approx.	ΔI	Weight, approx.	ΔI	Weight, approx.	ΔI	Weight, approx.
	mm	kg	mm	kg	mm	kg	mm	kg	mm	kg	mm	kg	mm	kg
1LE1														
71	–	–	–	–	165	2.6	–	–	–	–	–	–	–	–
80	161.5	5.4	–	–	161.5	2.9	–	–	–	–	–	–	–	–
90	174	7.7	–	–	174	3.5	–	–	–	–	–	–	–	–
100	161.5	8.3	–	–	161.5	3.8	161.5	4.8	161.5	4.4	246.5	5.3	–	–
112	156.5	10.4	–	–	156.5	4	156.5	5.1	156.5	4.7	241.5	5.6	–	–
132	186	15.7	–	–	186	5.7	186	6.8	186	6.4	291	7.4	–	–
160	205.5	37.2	–	–	205.5	8.6	205.5	9.8	205.5	9.4	320.5	10.5	–	–
180	257	40	–	–	257	10.4	257	10.6	257	10.2	400	10.9	–	–
200	262	53	–	–	262	11.6	262	11.8	262	11.4	397	12.1	–	–
225	563	87	440.5	60	410	25	410	26	410	26	410	26	410	25
250	609	110	409	79	425	27	425	28	425	28	425	28	425	27
280	571	149	402	120	429	30	429	31	429	31	429	31	429	30
315 (4,- 6-, and 8-pole)	540	296	432	203	432	41	432	42	432	42	432	42	432	41
315 (2-pole)	588	299	–	–	472	44	472	45	472	45	472	45	472	44
1LE5														
315 2-pole	633	415.7	–	–	425	400.9	633	402	633	401.6	633	402.3	633	401
4-pole	593	413.7	–	–	385	398.9	593	400	593	399.6	593	400.3	593	399
355	628	471.7	–	–	381	453.6	381	454.7	381	454.3	381	455	381	453.7

© Siemens AG 2018

Overview (continued)

Fig. 7 Brake, rotary pulse encoder (under cover) and separately driven fan, order codes **F01/F04 + F70 + G01/G02/G04/G05/G06/G11/G12** [optionally with manual release, order code **F50**]

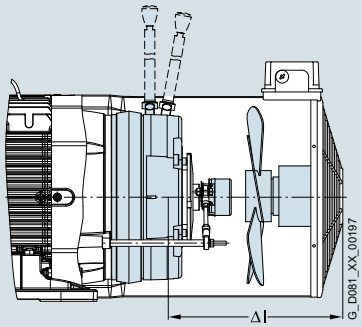

Frame sizes 100 to 200

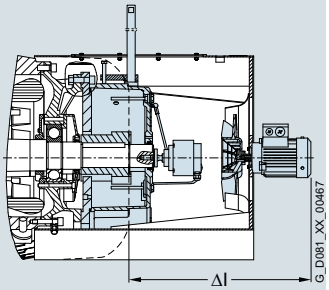

Frame sizes 225 to 355

Fig. 8 Protective cover for separately driven fan, order code **H00**

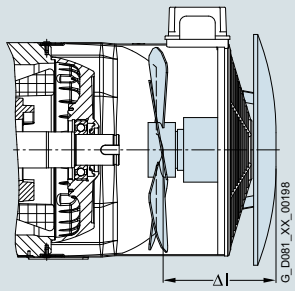

Frame sizes 100 to 200

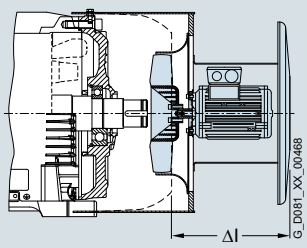

Frame sizes 225 to 355

Frame size	Assignment Fig. 7 Brake, separately driven fan, and rotary pulse encoder (under cover)								Sendix 5020		Fig. 8 Protective cover for separately driven fan		
	Order codes **F01 + F70 + G01/G02**		Order codes **F01 + F70 + G04**		Order codes **F01 + F70 + G05**		Order codes **F01 + F70 + G06**		Order codes **F01 + F70 + G11/G12**		Order code **H00**		
	ΔI	Weight, approx.	ΔI	Weight, approx.	ΔI	Weight, approx.	ΔI	Weight, approx.	ΔI	Weight, approx.	ΔI	Weight, approx.	Diameter of the separately-driven-fan cover
	mm	kg	mm	kg	mm	kg	mm	kg	mm	kg	mm	kg	mm
1LE1													
80	186.5	6.6	–	–	–	–	–	–	–	–	124.5	0.2	157
90	199	8.9	–	–	–	–	–	–	–	–	141.5	0.2	177
100	196.5	9.9	196.5	10.9	196.5	10.5	246.5	11.5	–	–	124	1.4	210
112	191.5	12	191.5	13.1	191.5	12.7	241.5	13.6	–	–	122	1.8	249
132	241	17.9	241	19	241	18.6	291	19.6	–	–	149	2.4	300
160	270.5	39.7	270.5	40.9	270.5	40.5	320.5	41.6	–	–	177	3	338
180	257	38.4	257	38.6	257	38.2	400	40.6	–	–	288	1.7	338
200	262	49.6	262	49.9	262	49.1	397	51.5	–	–	293	1.7	338
225	563	87.3	563	88.3	563	88.2	563	88.9	563	87.4	305	2.5	210
250	609	110.3	609	111.3	609	111.2	609	111.9	609	110.4	311	2.5	249
280	571	149.3	571	150.3	571	150.2	571	150.9	571	149.4	307	2.5	300
315 (4, 6, 8-pole)	540	296.3	540	297.3	540	297.2	540	297.9	540	296.4	321[1)]	2.5[1)]	338[1)]
315 (2-pole)	580	299.3	580	300.3	580	300.2	580	300.9	580	300.9	–	–	–
1LE5													
315 2-pole	–	–	–	–	–	–	–	–	–	–	402	46.1	690
4-pole	–	–	–	–	–	–	–	–	–	–	317	43.5	690
355	–	–	–	–	–	–	–	–	–	–	330	36	690

Frame size	Assignment Fig. 7 Brake, separately driven fan, and rotary pulse encoder (under cover)								Sendix 5020	
	Order codes **F04 + F70 + G01/G02**		Order codes **F04 + F70 + G04**		Order codes **F04 + F70 + G05**		Order codes **F04 + F70 + G06**		Order codes **F04+ F70 + G11/G12**	
	ΔI	Weight, approx.	ΔI	Weight, approx.	ΔI	Weight, approx.	ΔI	Weight, approx.	ΔI	Weight, approx.
	mm	kg	mm	kg	mm	kg	mm	kg	mm	kg
1LE1										
225	593.5	66.3	593.5	67.3	593.5	66.9	593.5	67.6	593.5	66.4
250	609	79.3	609	80.3	609	79.9	609	80.6	609	79.4
280	572	120.3	572	121.3	572	120.9	572	121.6	572	120.4
315	540	203.3	540	204.3	540	203.9	540	204.6	540	203.4
1LE5										
315 2-pole	633	416.6	633	417.7	633	417.3	633	418	633	416.7
4-pole	593	414.6	593	415.7	593	415.6	593	416	593	414.7
355	628	472.6	628	473.7	628	473.3	628	474	628	472.7

[1)] Valid for FS 315 (2, 4, 6, and 8-pole)

© Siemens AG 2018

Overview (continued)

Fig. 9 Prepared for mountings, center hole only (for 2LM8 brake, order code **F01** and/or encoder order code **G01/G02/G04/G05/G06**), order code **G40** (up to frame size 160, standard with frame size 180 and above)

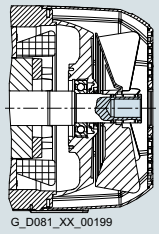

Fig. 10 Prepared for mountings with shaft D12/D16, order code **G41**/**G42**

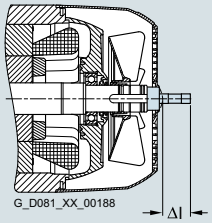

Frame size	Assignment **Fig. 9** Prepared for mountings, center hole only (for brake, order code **F01** and/or encoder order codes **G01**/**G02**/**G04**/**G05**/**G06**) order code **G40**		**Fig. 10** Prepared for mountings with shaft D12/D16, order code **G41**/**G42**			
	Order code **G40**		Order code **G41**		Order code **G42**	
	Δl	Weight, approx.	Δl	Weight, approx.	Δl	Weight, approx.
	mm	kg	mm	kg	mm	kg
1LE1						
71	–	–	–	–	–	–
80	0	0	22	0.1	52	0.1
90	0	0	22	0.1	52	0.1
100	0	0	18.3	0.15	54.3	0.2
112	0	0	14.5	0.15	54.3	0.2
132	0	0.1	18.8	0.3	58.8	0.4
160	0	0.2	18.6	0.4	55.6	0.7
180	0	0	18	0.27	57	0.33
200	0	0	17	0.27	56	0.27
225	0	0	23	0.27	58	0.33
250	0	0	23	0.27	58	0.33
280	0	0	23	0.27	58	0.33
315	0	0	23	0.27	58	0.33
1LE5						
315	0	0	23	0.27	58	0.33
355	0	0	23	0.27	58	0.33

© Siemens AG 2018

Overview (continued)

Fig. 11 Standard protective cover for types of construction, order code **H00**

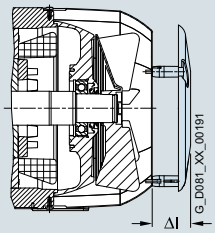

Fig. 12 Protective cover for textile industry, order code **F75**

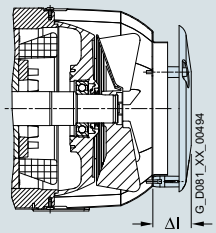

Frame size	Assignment Fig. 11 Protective cover Order code **H00**		Fig. 12 Protective cover Order code **F75**	
	Δl mm	Weight, approx. kg	Δl mm	Weight, approx. kg
71	29	0.15	–	–
80	128	0.3	17	0.3
90	144	0.4	15	0.4
100	137	0.5	64	0.7
112	122	0.7	64	0.9
132	156	1.3	71	1.3
160	182.5	1.7	71	1.9
180	285	1.7	90	3.2
200	297	1.7	90	3.4
225	100	2.2	On request	On request
250	100	2.4	On request	On request
280	110	3.4	On request	On request
315	110	4	On request	On request
1LE5				
315	110	8	–	–
355	140	8.5	–	–

© Siemens AG 2018

© Siemens AG 2018

2/2 Orientation
2/2 Overview, benefits, application, technical specifications, more information
2/6 Converter operation
2/6 Overview, benefits, application, technical specifications
2/7 Article number code

SIMOTICS GP/SD 1LE1

2/8 Motors with IE4 Super Premium Efficiency
2/8 Aluminum series 1LE1004 self-ventilated or forced-air cooled
2/9 Cast-iron series 1LE1504/1LE1604 self-ventilated or forced-air cooled

2/13 Motors with IE3 Premium Efficiency
Aluminum series
2/13 • 1LE1003 self-ventilated
2/16 • 1LE1003 self-ventilated with increased power
Cast-iron series
2/17 • 1LE1503/1LE1603 self-ventilated or forced-air cooled
2/24 • 1LE1503/1LE1603 self-ventilated with increased power

2/26 Motors with IE2 High Efficiency
Aluminum series
2/26 • 1LE1001 self-ventilated or forced-air cooled
2/30 • 1LE1001 self-ventilated with increased power
Cast-iron series
2/32 • 1LE1501/1LE1601 self-ventilated or forced-air cooled
2/40 • 1LE1501/1LE1601 self-ventilated with increased power

2/44 Motors with IE1 Standard Efficiency
Aluminum series
2/44 • 1LE1002 self-ventilated or forced-air cooled
2/47 • 1LE1002 self-ventilated with increased power
Cast-iron series
2/48 • 1LE1502 self-ventilated or forced-air cooled
2/52 • 1LE1502 self-ventilated or forced-air cooled with increased power

SIMOTICS GP/SD 1LE1 – APAC Line

2/54 Motors with IE3 Premium Efficiency
Aluminum series
2/54 • 1LE1043 self-ventilated or forced-air cooled
2/56 • 1LE1043 self-ventilated or forced-air cooled with increased power
Cast-iron series
2/57 • 1LE1543/1LE1643 self-ventilated or forced-air cooled
2/63 • 1LE1543/1LE1643 self-ventilated with increased power

2/65 Motors with IE2 High Efficiency
Aluminum series
2/65 • 1LE1041 self-ventilated or forced-air cooled
2/67 • 1LE1041 self-ventilated or forced-air cooled with increased power
Cast-iron series
2/68 • 1LE1541 self-ventilated or forced-air cooled
2/70 • 1LE1541 self-ventilated or forced-air cooled with increased power

SIMOTICS GP/SD 1LE1 – Eagle Line

2/71 NEMA Premium Efficient motors
2/71 Aluminum series 1LE1023 self-ventilated or forced-air cooled
2/73 Cast-iron series 1LE1523/1LE1623 self-ventilated or forced-air cooled

2/80 NEMA Energy Efficient motors
2/80 Aluminum series 1LE1021 self-ventilated or forced-air cooled
2/81 Cast-iron series 1LE1521 self-ventilated or forced-air cooled

SIMOTICS GP 1LE1 – pole-changing

Aluminum series
2/82 • 1LE1011 self-ventilated, const. load torque
2/83 • 1LE1011/1LE1012 self-ventilated, square-law load torque

2/85 Article No. supplements and special versions
2/85 Voltages
2/90 Types of construction
2/98 Motor protection
2/100 Terminal box position
2/102 Options
2/117 Accessories

2/118 Dimensions
2/118 Overall dimensions
2/121 Notes on the dimensions
2/121 Dimension sheet generator

Aluminum series
2/122 self-ventilated – IE1, IE2, NEMA Energy Efficient and pole-changing
2/124 self-ventilated with increased power – IE1, IE2
2/126 forced-air cooled/naturally cooled – IE1, IE2
2/128 self-ventilated – IE3, NEMA Premium Efficient
2/132 self-ventilated with increased power – IE3
2/134 forced-air cooled – IE3
2/138 self-ventilated – IE4

Cast-iron series
2/140 self-ventilated – IE1, IE2, NEMA Energy Efficient
2/148 self-ventilated – IE3, NEMA Premium Efficient
2/150 self-ventilated – IE4

© Siemens AG 2018

Overview

Increasing energy costs have resulted in greater emphasis on the power consumption of drive systems. It is extremely important to utilize the full potential for minimizing energy consumption here to secure competitiveness today and in the future. The environment will also profit from reduced energy consumption.

This is the reason that already today we are developing a new generation of low-voltage motors. Innovative rotors create the best requisites for motors with a high degree of efficiency. IE1 and IE2 motors with the same power have the same dimensions. The new motors for IE2, IE3 and IE4 offer considerable energy savings and protect our environment. We also consider environmental compatibility and sustainable use of resources during production. Potting compounds and coatings are, for example, solvent-free.

The modular mounting concept provides total flexibility. Each motor is based on a uniform concept for all markets worldwide. Our motors are manufactured according to the most advanced ecological standards.

The new 1LE1 motor family is therefore one of the most compact in the world, because it is manufactured using innovative technology. For an optimized design, a compound of highly conductive materials is used in the rotor (up to frame size 200). This results in minimum rotor losses and an excellent starting and switching response.

The design of the 1LE1 motors ensures maximum flexibility and minimum installation costs. Users benefit from integral lifting eyes, screw-on feet, reinforced bearing plates with optimum mechanical properties and easily accessible terminal boxes. Encoders, brakes and separately driven fans can also be added without any problems. Smaller inventories make stockkeeping easier, so motor suppliers can respond to customer requirements more quickly.

The 1LE1/1PC1 motor family comprises two main series:

- SIMOTICS GP for general purpose applications:
  Motors with an aluminum housing

  SIMOTICS GP 1LE1/1PC1 motors with an aluminum housing are suitable for a wide range of standard drive tasks in the industrial environment. Thanks to their particular low weight, they are predestined for applications in pumps, fans and compressors. But they also reliably fulfill their tasks in conveyor systems and lifting gear.

Brief overview	
Power and voltage range:	0.09 ... 45 kW for all commonly used voltages
Frame sizes and types of construction:	63 ... 200 in all common types of construction
Rated speed:	750 ... 3600 rpm
Number of poles:	2, 4, 6, 8
Efficiency classes:	• IE1 (Standard Efficiency) • IE2 (High Efficiency) • IE3 (Premium Efficiency) • IE4 (Super Premium Efficiency) • NEE (NEMA Energy Efficient, acc. to NEMA MG, Table 12-11) • NPE (NEMA Premium Efficient, acc. to NEMA MG, Table 12-12)

- SIMOTICS SD for severe duty applications:
  Motors with cast-iron housing

  SIMOTICS SD 1LE1 motors with a cast-iron housing are extremely rugged and are therefore the first choice for applications under harsh environmental conditions. They master dust or vibration in mills and mixers as well as the corrosive atmosphere in the petrochemical industry.

Brief overview	
Power and voltage range:	0.09 ... 200 kW for all commonly used voltages
Frame sizes and types of construction:	71 ... 315 in all common types of construction
Rated speed:	750 ... 3600 rpm
Number of poles:	2, 4, 6, 8
Efficiency classes:	• IE1 (Standard Efficiency) • IE2 (High Efficiency) • IE3 (Premium Efficiency) • IE4 (Super Premium Efficiency) • NEE (NEMA Energy Efficient, acc. to NEMA MG, Table 12-11) • NPE (NEMA Premium Efficient, acc. to NEMA MG, Table 12-12)

© Siemens AG 2018

Overview (continued)

High efficiency energy-saving motors for a positive energy balance

Depending on requirements, energy-saving motors for a positive energy balance are available that are compliant with the legal requirements applicable in the European economic area in accordance with EU Directive 640/2009 as well as for the North American market in accordance with US federal law EISA (Energy Independence Security Act).

Motors with increased power and compact construction (1LE1)

Motors with increased power and compact construction can be used to advantage in confined spaces. For a slightly longer overall length, the power is at least as high as that of the next largest frame size. These compact motors are also optimized for efficiency. They are offered in IE2 and IE3 and therefore reduce operating costs.

Motors without fan cover and without external fan (1LE1 with order code F90)

Forced-air cooled motors with surface cooling without fan cover and without external fan are mainly used for driving fans.

Motors with reduced power without fan cover and without external fan (1PC1 motors on request)

Naturally cooled motors with surface cooling without fan cover and without external fan are suitable for the following operating conditions:

- Types of duty with adequate cooling times (e.g. temporary duty for positioning drives)
- Environmental conditions that demand compact installation space (e.g. in motors with a stopping function)

Requirements that make an external fan disadvantageous, e.g. simple cleaning in the food industry, textile industry.

Preferred motors

The most popular basic versions of motor series 1LE1 are available under special terms as so-called "Preferred motors".

The complete range is covered by Price List D 81.1 P Part 1 "Preferred motors". The price list also contains further information regarding the new delivery concept.

Benefits

There is considerable potential in the new 1LE1/1PC1 series of low-voltage motors. As a consistent further development of existing motors, the 1LE1/1PC1 motors offer numerous advantages.

Greater efficiency

Innovative rotor technology and manufacturing technology has been implemented for the IE3 and IE4 high efficiency motor variants.
The energy-efficient motors are therefore considerably more compact.

The SinaSave Webtool can be used to calculate the energy saving potential and life cycle costs of all motors. SinaSave can be downloaded free of charge from the following website:
www.siemens.com/sinasave

The 1LE1 motors also impress customers with their extremely long life and their weight-optimized design has a positive effect on the stability of the equipment unit.

A wider range of applications

The motors are certified for worldwide use and satisfy high standards of quality (confirmed, for example, by CSA [1], UL [2], CQC [3]).

Improved design

The rugged housing in modern EMC design has an attractive appearance and enhances functionality. The rotatable, accessible terminal boxes, integral lifting eyes, screw-on feet and reinforced bearing plates ensure this.

Greater power

For the same frame size, the high-performance motors offer one complete rated power level more. We are also consistently implementing energy efficiency improvements here, too. The motors are offered (based on the categories of IEC 60034-30-1) in various efficiency classes.

More flexibility

The optimized design of the motors makes installation easier in general. Encoders, brakes and separately driven fans can be retrofitted easily. Terminal boxes and feet for flexible mounting can be selected. Smaller inventories make stockkeeping easier and motor suppliers can respond to customer requirements more quickly. Optimized manufacturing processes support fast availability. All motors up to 480 V can be operated either directly on the line or on a converter.

For general purpose applications: SIMOTICS GP motors with an aluminum housing

Particularly user friendly

The previously introduced, well-proven, obliquely partitioned terminal box is being implemented consistently throughout the entire motor series.

Special export line

For exporting to NAFTA, the Eagle Line is available. The motors are supplied with the electrical values stamped on the rating plate in accordance with EISA requirements.

1) Canadian Standard Association
2) Underwriters Laboratories Inc.
3) China Quality Certification

© Siemens AG 2018

Benefits (continued)

For severe duty applications: SIMOTICS SD motors with a cast-iron housing

The right motor for various challenges

The following lines are available for severe duty applications:

- Basic Line (1LE15): rugged, reliable motors for machine construction
- Performance Line (1LE16): Motors for the process industry with reinforced bearings and a more rugged coating – for requirements that extend beyond the Basic Line
- "Eagle Line": Motors for exporting to the NAFTA zone; they fulfill the requirements of UL and CSA and are supplied with the electrical values stamped on the rating plate in accordance with EISA requirements

Comparison: Basic Line versus Performance Line

Function	Basic Line	Performance Line
Bearing size	62 (63 from frame size 280 upwards)	63
Relubrication	Optional (standard from frame size 280 upwards)	Standard from frame size 160 upwards (optional for frame size 100 to 132)
Paint system	Standard paint finish, corrosivity category C2 [1)]	Special paint finish, corrosivity category C3 [1)]
Drainage	Drain plugs	T drains
Rating plate	Aluminum, plastic	Steel
Motor protection	Optional	PTC
Fan cover	Plastic	Steel
Warranty	12 months	36 months

Compact design

The size of a motor is often an important aspect in the case of machines. For this reason, the 1LE1 motors in IE2 and IE3 are not any longer than their predecessors in the 1LG series in IE2.

Another highlight: some of the IE3 motors fit in the same housing as the IE2 motors. The efficiency classes naturally do not differ with regard to shaft height, so that the mechanical interface to the equipment unit remains the same. This also supports a largely problem-free efficiency upgrade to IE3 – without the need to adapt the mechanical design of a machine.

Greater power

In severe duty applications, motors with increased power can also be the right solution if sufficient space is not available for a standard motor. Because these motors offer the same power rating in the next smallest frame size.

Application

As soon as the range of motors and options is complete, it will be possible to use the 1LE1/1PC1 motors from Siemens in all areas and sectors of industry due to their numerous options. They are suitable both for special environmental conditions such as those that predominate in the chemical or petrochemical industry as well as for most climatic requirements such as those of offshore applications.

Their large range of line voltages enables them to be used all over the world.

The wide field of implementation includes the following applications:

- Pumps
- Fans
- Compressors
- Conveyor systems such as cranes, belts and lifting gear
- High-bay warehouses
- Packaging machines
- Automation and drives
- Manufacturing industry
- General machine construction

Motors with a cast-iron housing are particularly suitable for the following severe duty applications:

- Petrochemical industry
- Pharmaceuticals
- Chemical industry
- Printing industry
- Process industry

[1)] See also Chapter 1, pages 1/21 and 1/22.

© Siemens AG 2018

Technical specifications

Overview of technical specifications

This table lists the most important technical specifications. For more information and details, see Catalog Section 1 "Introduction".

Type of motor	SIMOTICS GP/SD 1LE1/1PC1 IEC Low-Voltage Motors
Connection types	Star/delta connection The connection type to be used can be established from the Article No. supplements for the required motor.
Number of poles	2, 4, 6, 8
Frame sizes	63 M ... 315 L
Rated power	0.09 ... 200 kW (1LE1 motor series)/0.3 ... 9 kW (1PC1 motor series)
Frequencies	50 Hz and 60 Hz
Versions	Self-ventilated 1LE1 energy-saving motors with: • IE1 (Standard Efficiency) • IE2 (High Efficiency) • IE3 (Premium Efficiency) • IE4 (Super Premium Efficiency) • NEE (NEMA Energy Efficient, acc. to NEMA MG, Table 12-11) • NPE (NEMA Premium Efficient, acc. to NEMA MG, Table 12-12) Self-ventilated 1LE1 motors with increased power and: • IE1 (Standard Efficiency) • IE2 (High Efficiency) • IE3 (Premium Efficiency) Forced-air cooled 1LE1 motors without external fan and fan cover with: • IE1 (Standard Efficiency) • IE2 (High Efficiency) • IE3 (Premium Efficiency) • IE4 (Super Premium Efficiency) Naturally cooled 1PC1 motors without external fan and fan cover with: • IE1 (Standard Efficiency) • IE2 (High Efficiency) • IE3 (Premium Efficiency) • IE4 (Super Premium Efficiency)
Marking	IEC 60034-30-1 IE1, IE2, IE3, IE4: 2, 4, 6, and 8-pole US Energy Independence Security Act EISA: 2, 4, 6 and 8-pole
Rated speed (synchronous speed)	750 … 3000 rpm
Rated torque	0.6 ... 1703 Nm (1LE1 motor series)
Insulation of the stator winding in accordance with EN 60034-1 (IEC 60034-1)	Temperature class 155 (F), utilized acc. to temperature class 130 (B) (also for motors with increased power) DURIGNIT IR 2000 insulation system
Degree of protection according to EN 60034-5 (IEC 60034-5)	IP55 as standard
Cooling according to EN 60034-6 (IEC 60034-6)	• Self-ventilated (IC 411) (1LE1 motor series) frame size 80 M to 315 L • Forced-air cooled (IC 418) (1LE1 motor series with order code **F90**), frame size 80 M to 200 L • Naturally cooled (IC 410) (1PC1 motor series) frame size 100 L to 160 L
Permissible coolant temperature and installation altitude	–20 ... +40 °C as standard, installation altitude up to 1000 m above sea level. See "Coolant temperature and installation altitude" in Catalog Section 1 "Introduction".
Standard voltages according to EN 60038 (IEC 60038)	50 Hz: 230 V, 400 V, 500 V, 690 V The voltage to be used can be found in the "Selection and ordering data" for the required motor.
Type of construction according to EN 60034-7 (IEC 60034-7)	• Without flange: IM B3, IM B6, IM B7, IM B8, IM V5 without protective cover, IM V6, IM V5 with protective cover • With flange: IM B5, IM V1, IM V3, IM B35 • With flange and special flange (next largest flange): IM B14, IM V19, IM V18, IM B34
Paint finish Suitability of paint finish for climate group according to IEC 60721, Part 2-1	Standard: Color RAL 7030 stone gray See "Paint finish" in Catalog Section 1 "Introduction".
Vibration severity grade according to EN 60034-14 (IEC 60034-14)	Grade A (normal – without special vibration requirements) Optionally: Grade B (with special vibration requirements) See "Balance and vibration severity" in Catalog Section 1 "Introduction".
Shaft extension according to DIN 748 (IEC 60072)	Balancing type: half-key balancing as standard See "Balance and vibration severity" in Catalog Section 1 "Introduction".
Sound pressure level according to EN ISO 1680 (tolerance +3 dB)	The sound pressure level is listed in the selection and ordering data for the required motor.
Weights	The weight is listed in the selection and ordering data for the required motor.
Modular mounting concept	Rotary pulse encoder, brake, separately driven fan or prepared for mountings
Consistent series concept	• Cast housing feet, screwed-on feet available as an option and retrofittable • Terminal box obliquely partitioned and rotatable through 4 × 90° • Bearings at DE and NDE are of identical design, reinforced bearings available as an option
Options	See "Article No. supplements and special versions"

More information

For further information, please get in touch with your local Siemens contact and use the DT Configurator.

Contacts: www.siemens.com/automation/partner

DT Configurator: www.siemens.com/dt-configurator

You can find out about certain technologies through Siemens contact partners worldwide.

Wherever possible, you will find a local contact for:
- Technical support
- Spare parts/repairs
- Service
- Training
- Marketing & Sales
- Technical consultation/engineering

You start by selecting a:
- country
- product or
- sector.

By further specifying the remaining criteria you will find exactly the right contact partner with his/her respective expertise.

© Siemens AG 2018

Converter operation

Overview

Converter operation up to 500 V +10 % line voltage

See Chapter 1, page 1/32.

During installation, the EMC guidelines must be complied with

Note:

When motors are operated on SINAMICS converters additional losses occur which, depending on the admissible winding temperature, can make it necessary to reduce the torque. The admissible torque values can be obtained from the SIZER configuring tool. The lowest frequency specified there is 5 Hz. For stationary converter operation at lower frequencies, particularly in the case of frame sizes < 100, it is necessary to inquire at the Quotation Center.

Benefits

Motors operating with frequency converters offer the user numerous advantages.

The motors feature the future-oriented insulation system DURIGNIT IR 2000 (IR = Inverter Resistant). The DURIGNIT IR 2000 insulation system consists of high-quality enamel wires and insulating sheet materials in conjunction with temperature-resistant resin impregnation.

Application

The wide field of implementation includes the following applications:

- Conveyor systems such as cranes, belts and lifting gear
- High-bay warehouses
- Packaging machines
- Automation and drives

Their large range of line voltages enables them to be used all over the world.

Technical specifications

General note

All the data listed in the catalog is applicable for a 50 Hz line supply. With converter operation, the torque reduction factors for constant torque and drives for fans, pumps and compressors must be configured using the "SIZER for Siemens Drives" engineering tool. Higher noise levels must be expected at frequencies other than 50 Hz for motors operating with converters due to the harmonic content of the supply.

Mechanical limit speeds

When the motor is operated above its rated frequency, it is important to note that the maximum speeds are limited by the limits for the roller bearings, critical rotor speed and rigidity of the rotating parts (see page 1/60).

Motor protection

A motor protection function can be implemented using the I^2t sensing capability implemented in the converter software.

If required, more precise motor protection can be afforded by direct temperature measurement using KTY84 sensors, PTC thermistors, or Pt1000 resistance thermometers in the motor winding. Some converters from Siemens determine the motor temperature using the resistance of the temperature sensor. They can be set to a required temperature for alarm and tripping.

Insulation

The insulation of 1LE motors is designed such that converter operation is possible at voltages up to 500 V[1]. $\hat{U}_{\text{phase-to-phase}} \leq 1500$ V, $\hat{U}_{\text{phase-to-ground}} \leq 1100$ V, voltage rise times of $t_s > 0.1$ µs.

All motors with voltage codes 22 and 34 must be operated on a converter under these conditions. For converter operation with the power ratings specified in the catalog, the motors are used according to temperature class 155 (F), i.e. in this case neither a service factor > 1 nor an increased coolant temperature is possible (order codes N01, N02 and N03 cannot be ordered).

[1] See also IEC 60034-1 Edition 13.0

© Siemens AG 2018

Selection and ordering data

The article number consists of a combination of digits and letters and is divided into three hyphenated blocks to provide a better overview, e.g.:
1LE1001-1DB22-2CB5-Z
H00

The first block (positions 1 to 7) identifies the motor type. The second block (positions 8 to 12) defines the motor frame size and length, the number of poles and in some cases the frequency/voltage. In the third block (positions 13 to 16), the frequency/voltage, type of construction and further design features are encoded.

For deviations in the second and third block from the catalog codes either **Z** or **90** should be used as appropriate.

Ordering data:

- Complete Article No. and order code(s) or plain text
- If a quotation has been requested, please specify the quotation number in addition to the Article No.
- When ordering a complete motor as a spare part, please specify the works serial No. for the previously supplied motor as well as the Article No.

Structure of the Article No.:		Position:	1	2	3	4	5	6	7	-	8	9	10	11	12	-	13	14	15	16	
1st to 4th position: Digit, letter, letter, digit	• Self-ventilated by fan mounted on and driven by the rotor • Forced-air cooled by air flow from the fan to be driven with option extension **F90**		**1**	**L**	**E**	**1**															
	• Naturally cooled without external fan and fan cover		**1**	**P**	**C**	**1**															
5th position: Digit	Aluminum housing						**0**														
	Cast-iron housing Basic Line						**5**														
	Cast-iron housing Performance Line						**6**														
6th to 7th position: 2 digits	Motors with IE2 High Efficiency							**0**	**1**												
	APAC Line motors with IE2 High Efficiency							**4**	**1**												
	Motors with IE1 Standard Efficiency							**0**	**2**												
	Motors with IE3 Premium Efficiency							**0**	**3**												
	APAC Line motors with IE3 Premium Efficiency							**4**	**3**												
	Motors with IE4 Super Premium Efficiency							**0**	**4**												
	Pole-changing motors with one winding connected in Dahlander circuit							**1**	**1**												
	Pole-changing motors with two windings							**1**	**2**												
	NEMA Energy Efficient MG1 motors, Table 12-11 – Eagle Line							**2**	**1**												
	NEMA Premium Efficient MG1 motors, Table 12-12 – Eagle Line							**2**	**3**												
8th, 9th and 11th position: Digit, letter, digit	**Motor frame size** (frame size as a combination of shaft height and overall length, encoded)										**0** ... **3**	**A** ... **E**		**0** ... **6**							
10th position: Letter	**No. of poles** A: 2-pole, B: 4-pole, C: 6-pole, D: 8-pole, J: 4/2-pole const. load torque, L: 8/4-pole const. load torque, P: 4/2-pole square-law load torque, Q: 6/4-pole square-law load torque, R: 8/4-pole square-law load torque												**A** ... **R**								
12th and 13th position: 2 digits	**Voltage, circuit and frequency** (encoded with two digits, 9-0 requires order code M.. (e.g. M1Y))														**0** ... **9**		**0** ... **8**				
14th position: Letter	**Type of construction** (encoded with A ... Z; Z requires order code Q.. (e.g. H00))																	**A** ... **V**			
15th position: Letter	**Motor protection** (encoded with A ... Z; Z requires order code Q.. (e.g. Q2A))																		**A** ... **Z**		
16th position: Digit	**Terminal box position** 4: Terminal box top, 5: Terminal box right, 6: Terminal box left, 7: Terminal box bottom																			**4** ... **7**	
	Special order versions: encoded – additional order code required not encoded – additional plain text required																				- **Z**

Ordering example

Selection criteria	Requirement	Structure of the Article No.
Motor type 1LE1	Standard motor with IE3 High Efficiency, degree of protection IP55, aluminum housing	1LE1003-■■■■■-■■■■
Motor frame size/No. of poles/Speed	160 M/4-pole/1500 rpm	1LE1003-1DB2■-■■■■
Rated power	11 kW	
Voltage and frequency	230 VΔ/400 VY, 50 Hz	1LE1003-1DB22-2■■■
Type of construction with special version	IM V5 with protective cover [1]	1LE1003-1DB22-2C■■-Z H00
Motor protection	1 or 3 PTC thermistors – for tripping (2 terminals)	1LE1003-1DB22-2CB■-Z H00
Terminal box position	Terminal box right (viewed from DE)	1LE1003-1DB22-2CB5-Z H00

[1] Without protective cover as standard – the protective cover is defined with order code **H00** and must be ordered in addition to the Article No. with **-Z** and this order code.

© Siemens AG 2018

2

Selection and ordering data

P_{rated}, 50 Hz/ P50	P_{rated}, 60 Hz/ P60	Frame size	Operating values at rated power: n_{rated} 50 Hz	T_{rated} 50 Hz	η_{rated} 50 Hz, 4/4	η_{rated} 50 Hz, 3/4	η_{rated} 50 Hz, 2/4	cos-φ_{rated}, 50 Hz, 4/4	I_{rated} 50 Hz, 400 V	T_{LR}/T_{rated} 50 Hz	I_{LR}/I_{rated} 50 Hz	T_B/T_{rated} 50 Hz	L_{pfA}, 50 Hz	L_{WA}, 50 Hz	Aluminum series 1LE1004 Article No.	$m_{IM\ B3}$	J
kW	kW	FS	rpm	Nm	%	%	%		A				dB(A)	dB(A)		kg	kgm²
• Cooling: Self-ventilated (IC 411) or with order code F90 forced-air cooled without external fan and fan cover (IC 418) • Efficiency according to IEC 60034-30: IE4 Super Premium Efficiency, service factor (SF) 1.15 • Insulation: Thermal class 155 (temperature class F), IP55 degree of protection, utilization in accordance with thermal class 130 (temperature class B)																	
2-pole: 3000 rpm at 50 Hz, 3600 rpm at 60 Hz [1]																	
3	**3.45**	**100 L**	2920	9.8	89.1	89.8	89.4	0.86	5.7	3.7	9	4.9	62	74	**1LE1004-1AA4■-■■■■**	27	0.0054
4	**4.55**	**112 M**	2950	13	90	90.4	89.7	0.89	7.2	2.6	8.8	4.1	68	80	**1LE1004-1BA2■-■■■■**	34	0.012
5.5	**6.3**	**132 S**	2960	18	90.9	90.9	89.8	0.84	10.4	2.1	8.6	4.6	67	84	**1LE1004-1CA0■-■■■■**	44	0.024
7.5	**8.6**	**132 S**	2955	24	91.7	92.4	92.3	0.91	13	2.2	8.6	4.3	67	80	**1LE1004-1CA1■-■■■■**	56	0.031
11	**12.6**	**160 M**	2955	36	92.6	92.8	92	0.9	19.1	2.8	8.6	4.2	74	87	**1LE1004-1DA2■-■■■■**	84	0.061
15	**17.3**	**160 M**	2955	48	93.3	93.5	92.9	0.9	26	3.1	9	4.5	74	87	**1LE1004-1DA3■-■■■■**	98	0.068
18.5	**21.3**	**160 L**	2955	60	93.7	94.1	93.8	0.91	31.5	3.1	8.9	4.3	74	87	**1LE1004-1DA4■-■■■■**	112	0.074
22	**24.5**	**180 M**	2950	71	94	94.4	94.1	0.89	38	2.8	8.9	4.3	71	84	**1LE1004-1EA2■-■■■■**	139	0.091
30	**33.5**	**200 L**	2955	97	94.5	94.8	94.4	0.85	54	2.8	7.9	4	69	83	**1LE1004-2AA4■-■■■■**	173	0.13
37	**41.5**	**200 L**	2955	120	94.8	95.1	94.9	0.88	64	2.9	7.8	4	69	83	**1LE1004-2AA5■-■■■■**	214	0.20
4-pole: 1500 rpm at 50 Hz, 1800 rpm at 60 Hz [1]																	
2.2	**2.55**	**100 L**	1465	14	89.5	89.6	88.3	0.79	4.5	3.3	8.5	4.7	59	71	**1LE1004-1AB4■-■■■■**	30	0.014
3	**3.45**	**100 L**	1460	20	90.4	91	90.5	0.81	5.9	3.5	8.8	4.2	59	71	**1LE1004-1AB5■-■■■■**	38	0.016
4	**4.55**	**112 M**	1465	26	91.1	91.6	91	0.81	7.8	3.1	8.3	4.3	63	75	**1LE1004-1BB2■-■■■■**	46	0.020
5.5	**6.3**	**132 S**	1470	36	91.9	92.5	92.3	0.83	10.4	2.6	8.3	3.5	56	68	**1LE1004-1CB0■-■■■■**	59	0.039
7.5	**8.6**	**132 M**	1470	49	92.6	93.1	92.7	0.81	14.4	3	7.7	4	56	68	**1LE1004-1CB2■-■■■■**	62	0.046
11	**12.6**	**160 M**	1475	71	93.3	93.5	92.9	0.82	21	2.9	8.1	4.1	63	76	**1LE1004-1DB2■-■■■■**	98	0.099
15	**17.3**	**160 L**	1480	97	93.9	94	93.3	0.8	29	3.7	7.8	4.3	63	76	**1LE1004-1DB4■-■■■■**	109	0.11
18.5	**21.3**	**180 M**	1470	120	94.2	94.7	94.5	0.81	35	2.7	7.9	3.6	59	72	**1LE1004-1EB2■-■■■■**	153	0.17
22	**25.3**	**180 L**	1475	142	94.5	95	94.8	0.81	41.5	2.9	7.7	3.8	59	72	**1LE1004-1EB4■-■■■■**	158	0.18
30	**34.5**	**200 L**	1475	194	94.9	95.2	94.9	0.81	56	3.2	7.3	3.6	60	73	**1LE1004-2AB5■-■■■■**	205	0.27

Voltages		Version					Order code
Frame sizes 100 L to 200 L: Use of the 4 x 90° rotatable terminal box							
50 Hz 230 VΔ/400 VY	60 Hz [1] 460 VY	**Standard**	2	2			–
50 Hz 400 VΔ/690 VY	60 Hz [1] 460 VΔ	**Standard**	3	4			–
For other voltages [1] and more information, see from page 2/85			9	0			. . .
Types of construction		Version					Order code
Without flange	IM B3 [2]	**Standard**			A		–
With flange	IM B5 [2]	With additional charge			F		–
With flange	IM B14 [2]	With additional charge			K		–
For other types of construction and more information, see from page 2/90					■		. . .
Motor protection		Version					Order code
Frame sizes 100 L to 200 L: Use of the 4 x 90° rotatable terminal box							
Without		**Standard**				A	–
PTC thermistor with 3 temperature sensors		With additional charge				B	–
For other motor protection and more information, see from page 2/98						■	. . .
Terminal box position		Version					
Terminal box at top		**Standard**					4
For other terminal box positions and more information, see from page 2/100							■
Special versions							Order code(s)
Forced-air cooled motors w/o ext. fan/fan cover (IC 418)			**1LE1004-. . . .■-■■■■**				**-Z F90** +. . .+. . .+. . .
For options, see from page 2/102			**1LE1004-. . . .■-■■■■**				**-Z** . . .+. . .+. . .+. . .

[1] Operating values at rated power for 60 Hz are stored in the Drive Technology Configurator (DT Configurator; see Appendix, "Tools and engineering").

[2] Types derived from IM B3 (IM B6/7/8, IM V6, and IM V5), from IM B5 (IM V3 and IM V1) and from IM B14 (IM V19 and IM V18) are possible, provided that no requirements exist for condensation drainage holes (**H03**) or stamping of the type on the rating plate. The basic type IM B3, IM B5 or IM B14 is stamped as standard on the rating plate. For orders with condensation drainage holes (**H03**), the type must be specified.

© Siemens AG 2018

Selection and ordering data

P_{rated}, 50 Hz/ P50	P_{rated}, 60 Hz/ P60	Frame size	Operating values at rated power: n_{rated} 50 Hz	T_{rated} 50 Hz	η_{rated} 50 Hz, 4/4	η_{rated} 50 Hz, 3/4	η_{rated} 50 Hz, 2/4	cos-φ_{rated}, 50 Hz, 4/4	I_{rated} 50 Hz, 400 V	T_{LR}/T_{rated} 50 Hz	I_{LR}/I_{rated} 50 Hz	T_B/T_{rated} 50 Hz	L_{pfA}, 50 Hz	L_{WA}, 50 Hz	Cast-iron series 1LE1504 – Basic Line, Article No.	$m_{IM\ B3}$	J
kW	kW	FS	rpm	Nm	%	%	%		A				dB(A)	dB(A)		kg	kgm²
• Cooling: Self-ventilated (IC 411) or with order code F90 forced-air cooled without external fan and fan cover (IC 418) • Efficiency according to IEC 60034-30: IE4 Super Premium Efficiency, service factor (SF) 1.15 • Insulation: Thermal class 155 (temperature class F), IP55 degree of protection, utilization in accordance with thermal class 130 (temperature class B)																	
2-pole: 3000 rpm at 50 Hz, 3600 rpm at 60 Hz																	
3	3.45	100 L	2920	9.8	89.1	89.8	89.4	0.86	5.7	3.7	9	4.9	62	74	1LE1504-1AA4■-■■■■	38	0.0054
4	4.55	112 M	2950	13	90	90.4	89.7	0.89	7.2	2.6	8.8	4.1	68	80	1LE1504-1BA2■-■■■■	45	0.012
5.5	6.3	132 S	2960	18	90.9	90.9	89.8	0.84	10.4	2.1	8.6	4.6	67	84	1LE1504-1CA0■-■■■■	62	0.024
7.5	8.6	132 S	2955	24	91.7	92.4	92.3	0.91	13	2.2	8.6	4.3	67	80	1LE1504-1CA1■-■■■■	74	0.031
11	12.6	160 M	2955	36	92.6	92.8	92	0.9	19.1	2.8	8.6	4.2	74	87	1LE1504-1DA2■-■■■■	113	0.061
15	17.3	160 M	2955	48	93.3	93.5	92.9	0.9	26	3.1	9	4.5	74	87	1LE1504-1DA3■-■■■■	130	0.068
18.5	21.3	160 L	2955	60	93.7	94.1	93.8	0.91	31.5	3.1	8.9	4.3	74	87	1LE1504-1DA4■-■■■■	147	0.074
22	24.5	180 M	2950	71	94	94.4	94.1	0.89	38	2.8	8.9	4.3	71	84	1LE1504-1EA2■-■■■■	175	0.091
30	33.5	200 L	2955	97	94.5	94.8	94.4	0.85	54	2.8	7.9	4	69	83	1LE1504-2AA4■-■■■■	222	0.13
37	41.5	200 L	2955	120	94.8	95.1	94.9	0.88	64	2.9	7.8	4	69	83	1LE1504-2AA5■-■■■■	263	0.20
45	51	225 M	2970	145	95	95	94.4	0.85	80	3.1	8.8	4.1	73	86	1LE1504-2BA2■-■■■■	330	0.26
55	62	250 M	2978	176	95.3	95.2	94.5	0.88	95	2.5	7.5	3.2	73	86	1LE1504-2CA2■-■■■■	430	0.48
75	84	280 S	2980	240	95.6	95.6	95	0.89	127	2.7	8.4	3.5	73	87	1LE1504-2DA0■-■■■■	610	0.94
90	101	280 M	2978	289	95.8	95.9	95.4	0.89	152	2.7	8.4	3.5	77	91	1LE1504-2DA2■-■■■■	610	1.0
110	123	315 S	2985	352	96	96	95.3	0.89	186	2.6	8.8	3.4	77	91	1LE1504-3AA0■-■■■■	750	1.4
132	148	315 M	2988	422	96.2	96.2	95.6	0.9	220	3.1	10.5	4	77	91	1LE1504-3AA2■-■■■■	980	1.9
160	180	315 L	2988	511	96.3	96.3	95.8	0.92	260	3.2	10.3	3.9	78	91	1LE1504-3AA4■-■■■■	1060	2.1
200	224	315 L	2986	640	96.5	96.5	96.1	0.92	325	3.5	10	3.9	78	93	1LE1504-3AA5■-■■■■	1180	2.4

Voltages [2]		Version							Order code
50 Hz 230 VΔ/400 VY	60 Hz [1] 460 VY	**Standard**	2	2					–
50 Hz 400 VΔ/690 VY	60 Hz [1] 460 VΔ	**Standard**	3	4					–
For other voltages and more information, see from page 2/88			9	0					. . .
Types of construction		Version							Order code
Without flange	IM B3 [3]	**Standard**			A				–
With flange	IM B5 [3]	With additional charge			F				–
With flange	IM B5 [3]	With additional charge			K				–
For other types of construction and more information, see from page 2/94					■				. . .
Motor protection		Version							Order code
Without		**Standard**				A			–
PTC thermistor with 3 temperature sensors		With additional charge				B			–
For other motor protection and more information, see from page 2/99						■			. . .
Terminal box position		Version							
Terminal box at top		**Standard**					4		
For other terminal box positions and more information, see from page 2/101							■		
Special versions									Order code(s)
Forced-air cooled motors w/o ext. fan/fan cover (IC 418)		1LE1504-. . . . ■-■■■■						-Z	F90 +. . .+. . .+. . .
For options, see from page 2/109		1LE1504-. . . . ■-■■■■						-Z	. . .+. . .+. . .+. . .

Note: IE4 motors (2-pole) in frame size 315 do not comply with the vibration values stipulated in IEC 60034-14 when rigidly installed (see also page 1/56).

1) Operating values at rated power for 60 Hz are stored in the Drive Technology Configurator (DT Configurator; see Appendix, "Tools and engineering").

2) Parallel supply lines are required in the case of connection to ≤ 240 V. For frame size 315 with connection to ≤ 240 V, due to the high current, a drilled, removable entry plate (order code **R52**) or a larger terminal box (order code **R50**) can be used. Order codes **R52** and **R50** alter the motor dimensions.

3) Types derived from IM B3 (IM B6/7/8, IM V6 and IM V5), from IM B5 (IM V3 and IM V1) and from IM B14 (IM V19 and IM V18) are possible, provided that no requirement exists for stamping of the type on the rating plate. The basic type IM B3, IM B5 or IM B14 is stamped as standard on the rating plate. If mounted in a different position, the position must be specified to ensure that the condensation drainage holes are positioned correctly.

© Siemens AG 2018

2

Selection and ordering data (continued)

P_{rated}, 50 Hz/ P50	P_{rated}, 60 Hz/ P60	Frame size	Operating values at rated power: n_{rated} 50 Hz	T_{rated} 50 Hz	Different IE class 60 Hz/P60	η_{rated} 50 Hz, 4/4	η_{rated} 50 Hz, 3/4	η_{rated} 50 Hz, 2/4	cos-φ_{rated}, 50 Hz, 4/4	I_{rated} 50 Hz, 400 V	T_{LR}/T_{rated} 50 Hz	I_{LR}/I_{rated} 50 Hz	T_B/T_{rated} 50 Hz	L_{pfA}, 50 Hz	L_{WA}, 50 Hz	Cast-iron series 1LE1504 – Basic Line Article No.	$m_{IM\ B3}$	J
kW	kW	FS	rpm	Nm		%	%	%		A				dB(A)	dB(A)		kg	kgm^2
• Cooling: Self-ventilated (IC 411) or with order code F90 forced-air cooled without external fan and fan cover (IC 418) • Efficiency according to IEC 60034-30: IE4 Super Premium Efficiency, service factor (SF) 1.15 • Insulation: Thermal class 155 (temperature class F), IP55 degree of protection, utilization in accordance with thermal class 130 (temperature class B)																		
4-pole: 1500 rpm at 50 Hz, 1800 rpm at 60 Hz																		
2.2	**2.55**	**100 L**	1465	14		89.5	89.6	88.3	0.79	4.5	3.3	8.5	4.7	59	71	**1LE1504-1AB4■-■■■■**	41	0.014
3	**3.45**	**100 L**	1460	20		90.4	91	90.5	0.81	5.9	3.5	8.8	4.2	59	71	**1LE1504-1AB5■-■■■■**	50	0.016
4	**4.55**	**112 M**	1465	26		91.1	91.6	91	0.81	7.8	3.1	8.3	4.3	63	75	**1LE1504-1BB2■-■■■■**	58	0.020
5.5	**6.3**	**132 S**	1470	36		91.9	92.5	92.3	0.83	10.4	2.6	8.3	3.5	56	68	**1LE1504-1CB0■-■■■■**	77	0.039
7.5	**8.6**	**132 M**	1470	49		92.6	93.1	92.7	0.81	14.4	3	7.7	4	56	68	**1LE1504-1CB2■-■■■■**	80	0.046
11	**12.6**	**160 M**	1475	71		93.3	93.5	92.9	0.82	21	2.9	8.1	4.1	63	76	**1LE1504-1DB2■-■■■■**	127	0.099
15	**17.3**	**160 L**	1480	97		93.9	94	93.3	0.8	29	3.7	7.8	4.3	63	76	**1LE1504-1DB4■-■■■■**	138	0.11
18.5	**21.3**	**180 M**	1470	120		94.2	94.7	94.5	0.81	35	2.7	7.9	3.6	59	72	**1LE1504-1EB2■-■■■■**	187	0.17
22	**25.3**	**180 L**	1475	142		94.5	95	94.8	0.81	41.5	2.9	7.7	3.8	59	72	**1LE1504-1EB4■-■■■■**	192	0.18
30	**34.5**	**200 L**	1475	194		94.9	95.2	94.9	0.81	56	3.2	7.3	3.6	60	73	**1LE1504-2AB5■-■■■■**	258	0.27
37	**42.5**	**225 S**	1485	238		95.2	95.5	95.2	0.84	67	3.2	8.4	3.2	69	83	**1LE1504-2BB0■-■■■■**	345	0.52
45	**52**	**225 M**	1485	289	IE3	95.4	95.7	95.4	0.84	81	3.4	8	3.3	69	83	**1LE1504-2BB2■-■■■■**	415	0.66
55	**63**	**250 M**	1486	353		95.7	95.8	95.4	0.86	96	3	8.2	3.3	68	82	**1LE1504-2CB2■-■■■■**	490	1.1
75	**86**	**280 S**	1490	481		96	96.1	95.6	0.85	133	3.4	9.2	3.8	69	83	**1LE1504-2DB0■-■■■■**	670	1.7
90	**104**	**280 M**	1488	578		96.1	96.3	96.1	0.86	157	3.2	9	3.4	70	84	**1LE1504-2DB2■-■■■■**	730	2.0
110	**127**	**315 M** [4]	1491	705		96.3	96.4	95.9	0.86	192	3.2	8.6	3.3	73	87	**1LE1504-3AB0■-■■■■**	910	2.7
132	**152**	**315 M**	1491	845		96.4	96.6	96.2	0.87	225	3.3	8.7	3.3	73	87	**1LE1504-3AB2■-■■■■**	990	3.1
160	**184**	**315 L**	1490	1025		96.6	96.7	96.5	0.86	280	3.6	9	3.2	76	90	**1LE1504-3AB4■-■■■■**	1180	3.7
200	**230**	**315 L**	1490	1282		96.7	96.9	96.6	0.86	345	3.8	9.2	3.4	76	90	**1LE1504-3AB5■-■■■■**	1300	4.4

Voltages [2]		Version				Order code
50 Hz 230 VΔ/400 VY	60 Hz [1] 460 VY	**Standard**	**2**	**2**		–
50 Hz 400 VΔ/690 VY	60 Hz [1] 460 VΔ	**Standard**	**3**	**4**		–
For other voltages and more information, see from page 2/88			**9**	**0**		. . .
Types of construction		Version				Order code
Without flange	IM B3 [3]	**Standard**			**A**	–
With flange	IM B5 [3]	With additional charge			**F**	–
With flange	IM B5 [3]	With additional charge			**K**	–
For other types of construction and more information, see from page 2/94					■	. . .
Motor protection		Version				Order code
Without		**Standard**				–
PTC thermistor with 3 temperature sensors		With additional charge				–
For other motor protection and more information, see from page 2/99						. . .
Terminal box position		Version				
Terminal box at top		**Standard**				**4**
For other terminal box positions and more information, see from page 2/101						■
Special versions						Order code(s)
Forced-air cooled motors w/o ext. fan/fan cover (IC 418)						**1LE1504-. . . . ■-■■■■-Z** **F90 +. . .+. . .+. . .**
For options, see from page 2/109						**1LE1504-. . . . ■-■■■■-Z** **. . .+. . .+. . .+. . .**

1) Operating values at rated power for 60 Hz are stored in the Drive Technology Configurator (DT Configurator; see Appendix, "Tools and engineering").

2) Parallel supply lines are required in the case of connection to ≤ 240 V. For frame size 315 with connection to ≤ 240 V, due to the high current, a drilled, removable entry plate (order code **R52**) or a larger terminal box (order code **R50**) can be used. Order codes **R52** and **R50** alter the motor dimensions.

3) Types derived from IM B3 (IM B6/7/8, IM V6 and IM V5), from IM B5 (IM V3 and IM V1) and from IM B14 (IM V19 and IM V18) are possible, provided that no requirement exists for stamping of the type on the rating plate. The basic type IM B3, IM B5 or IM B14 is stamped as standard on the rating plate. If mounted in a different position, the position must be specified to ensure that the condensation drainage holes are positioned correctly.

4) As 315 M version (not the same as 315 S according to EN 50347).

© Siemens AG 2018

Selection and ordering data

P_{rated}, 50 Hz/ P50	P_{rated}, 60 Hz/ P60	Frame size	Operating values at rated power: n_{rated} 50 Hz	T_{rated} 50 Hz	η_{rated} 50 Hz, 4/4	η_{rated} 50 Hz, 3/4	η_{rated} 50 Hz, 2/4	cos-φ_{rated}, 50 Hz, 4/4	I_{rated} 50 Hz, 400 V	T_{LR}/T_{rated} 50 Hz	I_{LR}/I_{rated} 50 Hz	T_B/T_{rated} 50 Hz	L_{pfA}, 50 Hz	L_{WA}, 50 Hz	Cast-iron series 1LE1604 – *Performance Line* Article No.	$m_{IM\ B3}$	J
kW	kW	FS	rpm	Nm	%	%	%		A				dB(A)	dB(A)		kg	kgm^2
• Cooling: Self-ventilated (IC 411) or with order code F90 forced-air cooled without external fan and fan cover (IC 418) • Efficiency according to IEC 60034-30: IE4 Super Premium Efficiency, service factor (SF) 1.15 • Insulation: Thermal class 155 (temperature class F), IP55 degree of protection, utilization in accordance with thermal class 130 (temperature class B)																	
2-pole: 3000 rpm at 50 Hz, 3600 rpm at 60 Hz																	
3	3.45	100 L	2920	9.8	89.1	89.8	89.4	0.86	5.7	3.7	9	4.9	62	74	1LE1604-1AA4■-■■■■	38	0.0054
4	4.55	112 M	2950	13	90	90.4	89.7	0.89	7.2	2.6	8.8	4.1	68	80	1LE1604-1BA2■-■■■■	45	0.012
5.5	6.3	132 S	2960	18	90.9	90.9	89.8	0.84	10.4	2.1	8.6	4.6	67	84	1LE1604-1CA0■-■■■■	62	0.024
7.5	8.6	132 S	2955	24	91.7	92.4	92.3	0.91	13	2.2	8.6	4.3	67	80	1LE1604-1CA1■-■■■■	74	0.031
11	12.6	160 M	2955	36	92.6	92.8	92	0.9	19.1	2.8	8.6	4.2	74	87	1LE1604-1DA2■-■■■■	113	0.061
15	17.3	160 M	2955	48	93.3	93.5	92.9	0.9	26	3.1	9	4.5	74	87	1LE1604-1DA3■-■■■■	130	0.068
18.5	21.3	160 L	2955	60	93.7	94.1	93.8	0.91	31.5	3.1	8.9	4.3	74	87	1LE1604-1DA4■-■■■■	147	0.074
22	24.5	180 M	2950	71	94	94.4	94.1	0.89	38	2.8	8.9	4.3	71	84	1LE1604-1EA2■-■■■■	175	0.091
30	33.5	200 L	2955	97	94.5	94.8	94.4	0.85	54	2.8	7.9	4	69	83	1LE1604-2AA4■-■■■■	222	0.13
37	41.5	200 L	2955	120	94.8	95.1	94.9	0.88	64	2.9	7.8	4	69	83	1LE1604-2AA5■-■■■■	263	0.20
45	51	225 M	2970	145	95	95	94.4	0.85	80	3.1	8.8	4.1	73	86	1LE1604-2BA2■-■■■■	330	0.26
55	62	250 M	2978	176	95.3	95.2	94.5	0.88	95	2.5	7.5	3.2	73	86	1LE1604-2CA2■-■■■■	430	0.48
75	84	280 S	2980	240	95.6	95.6	95	0.89	127	2.7	8.4	3.5	73	87	1LE1604-2DA0■-■■■■	610	0.94
90	101	280 M	2978	289	95.8	95.9	95.4	0.89	152	2.7	8.4	3.5	77	91	1LE1604-2DA2■-■■■■	610	1.0
110	123	315 S	2985	352	96	96	95.3	0.89	186	2.6	8.8	3.4	77	91	1LE1604-3AA0■-■■■■	750	1.4
132	148	315 M	2988	422	96.2	96.2	95.6	0.9	220	3.1	10.5	4	77	91	1LE1604-3AA2■-■■■■	980	1.9
160	180	315 L	2988	511	96.3	96.3	95.8	0.92	260	3.2	10.3	3.9	78	91	1LE1604-3AA4■-■■■■	1060	2.1
200	224	315 L	2986	640	96.5	96.5	96.1	0.92	325	3.5	10	3.9	78	93	1LE1604-3AA5■-■■■■	1180	2.4

Voltages [2]		Version							Order code
50 Hz 230 VΔ/400 VY	60 Hz [1] 460 VY	**Standard**	2	2					–
50 Hz 400 VΔ/690 VY	60 Hz [1] 460 VΔ	**Standard**	3	4					–
For other voltages and more information, see from page 2/88			9	0					. . .
Types of construction		Version							Order code
Without flange	IM B3 [3]	**Standard**			A				–
With flange	IM B5 [3]	With additional charge			F				–
With flange	IM B5 [3]	With additional charge			K				–
For other types of construction and more information, see from page 2/94					■				. . .
Motor protection		Version							Order code
PTC thermistor with 3 temperature sensors		**Standard**				B			–
For other motor protection and more information, see from page 2/99						■			. . .
Terminal box position		Version							
Terminal box at top		**Standard**					4		
For other terminal box positions and more information, see from page 2/101							■		
Special versions									Order code(s)
Forced-air cooled motors w/o ext. fan/fan cover (IC 418)		1LE1604-. . . . ■-■■■■						-Z	F90 +. . .+. . .+. . .
For options, see from page 2/109		1LE1604-. . . . ■-■■■■						-Z	. . .+. . .+. . .+. . .

Note: IE4 motors (2-pole) in frame size 315 do not comply with the vibration values stipulated in IEC 60034-14 when rigidly installed (see also page 1/56).

1) Operating values at rated power for 60 Hz are stored in the Drive Technology Configurator (DT Configurator; see Appendix, "Tools and engineering").

2) Parallel supply lines are required in the case of connection to ≤ 240 V. For frame size 315 with connection to ≤ 240 V, due to the high current, a drilled, removable entry plate (order code **R52**) or a larger terminal box (order code **R50**) can be used. Order codes **R52** and **R50** alter the motor dimensions.

3) Types derived from IM B3 (IM B6/7/8, IM V6 and IM V5), from IM B5 (IM V3 and IM V1) and from IM B14 (IM V19 and IM V18) are possible, provided that no requirement exists for stamping of the type on the rating plate. The basic type IM B3, IM B5 or IM B14 is stamped as standard on the rating plate. If mounted in a different position, the position must be specified to ensure that the condensation drainage holes are positioned correctly.

© Siemens AG 2018

2

Selection and ordering data (continued)

P_{rated}, 50 Hz/ P50	P_{rated}, 60 Hz/ P60	Frame size	Operating values at rated power: n_{rated} 50 Hz	T_{rated} 50 Hz	Different IE class 60 Hz/P60	η_{rated} 50 Hz, 4/4	η_{rated} 50 Hz, 3/4	η_{rated} 50 Hz, 2/4	cos-φ_{rated}, 50 Hz, 4/4	I_{rated} 50 Hz, 400 V	T_{LR}/T_{rated} 50 Hz	I_{LR}/I_{rated} 50 Hz	T_B/T_{rated} 50 Hz	L_{pfA}, 50 Hz	L_{WA}, 50 Hz	Cast-iron series 1LE1604 – Performance Line, Article No.	$m_{IM\ B3}$	J
kW	kW	FS	rpm	Nm		%	%	%		A				dB(A)	dB(A)		kg	kgm²
• Cooling: Self-ventilated (IC 411) or with order code F90 forced-air cooled without external fan and fan cover (IC 418) • Efficiency according to IEC 60034-30: IE4 Super Premium Efficiency, service factor (SF) 1.15 • Insulation: Thermal class 155 (temperature class F), IP55 degree of protection, utilization in accordance with thermal class 130 (temperature class B)																		
4-pole: 1500 rpm at 50 Hz, 1800 rpm at 60 Hz																		
2.2	**2.55**	**100 L**	1465	14		89.5	89.6	88.3	0.79	4.5	3.3	8.5	4.7	59	71	**1LE1604-1AB4■-■■■■**	41	0.014
3	**3.45**	**100 L**	1460	20		90.4	91	90.5	0.81	5.9	3.5	8.8	4.2	59	71	**1LE1604-1AB5■-■■■■**	50	0.016
4	**4.55**	**112 M**	1465	26		91.1	91.6	91	0.81	7.8	3.1	8.3	4.3	63	75	**1LE1604-1BB2■-■■■■**	58	0.020
5.5	**6.3**	**132 S**	1470	36		91.9	92.5	92.3	0.83	10.4	2.6	8.3	3.5	56	68	**1LE1604-1CB0■-■■■■**	77	0.039
7.5	**8.6**	**132 M**	1470	49		92.6	93.1	92.7	0.81	14.4	3	7.7	4	56	68	**1LE1604-1CB2■-■■■■**	80	0.046
11	**12.6**	**160 M**	1475	71		93.3	93.5	92.9	0.82	21	2.9	8.1	4.1	63	76	**1LE1604-1DB2■-■■■■**	127	0.099
15	**17.3**	**160 L**	1480	97		93.9	94	93.3	0.8	29	3.7	7.8	4.3	63	76	**1LE1604-1DB4■-■■■■**	138	0.11
18.5	**21.3**	**180 M**	1470	120		94.2	94.7	94.5	0.81	35	2.7	7.9	3.6	59	72	**1LE1604-1EB2■-■■■■**	187	0.17
22	**25.3**	**180 L**	1475	142		94.5	95	94.8	0.81	41.5	2.9	7.7	3.8	59	72	**1LE1604-1EB4■-■■■■**	192	0.18
30	**34.5**	**200 L**	1475	194		94.9	95.2	94.9	0.81	56	3.2	7.3	3.6	60	73	**1LE1604-2AB5■-■■■■**	258	0.27
37	**42.5**	**225 S**	1485	238		95.2	95.5	95.2	0.84	67	3.2	8.4	3.2	69	83	**1LE1604-2BB0■-■■■■**	345	0.52
45	**52**	**225 M**	1485	289	IE3	95.4	95.7	95.4	0.84	81	3.4	8	3.3	69	83	**1LE1604-2BB2■-■■■■**	415	0.66
55	**63**	**250 M**	1486	353		95.7	95.8	95.4	0.86	96	3	8.2	3.3	68	82	**1LE1604-2CB2■-■■■■**	490	1.1
75	**86**	**280 S**	1490	481		96	96.1	95.6	0.85	133	3.4	9.2	3.8	69	83	**1LE1604-2DB0■-■■■■**	670	1.7
90	**104**	**280 M**	1488	578		96.1	96.3	96.1	0.86	157	3.2	9	3.4	70	84	**1LE1604-2DB2■-■■■■**	730	2.0
110	**127**	**315 M** [4]	1491	705		96.3	96.4	95.9	0.86	192	3.2	8.6	3.3	73	87	**1LE1604-3AB0■-■■■■**	910	2.7
132	**152**	**315 M**	1491	845		96.4	96.6	96.2	0.87	225	3.3	8.7	3.3	73	87	**1LE1604-3AB2■-■■■■**	990	3.1
160	**184**	**315 L**	1490	1025		96.6	96.7	96.5	0.86	280	3.6	9	3.2	76	90	**1LE1604-3AB4■-■■■■**	1180	3.7
200	**230**	**315 L**	1490	1282		96.7	96.9	96.6	0.86	345	3.8	9.2	3.4	76	90	**1LE1604-3AB5■-■■■■**	1300	4.4

Voltages [2]		Version					Order code
50 Hz 230 VΔ/400 VY	60 Hz [1] 460 VY	**Standard**	**2**	**2**			–
50 Hz 400 VΔ/690 VY	60 Hz [1] 460 VΔ	**Standard**	**3**	**4**			–
For other voltages and more information, see from page 2/88			**9**	**0**			. . .
Types of construction		Version					Order code
Without flange	IM B3 [3]	**Standard**			**A**		–
With flange	IM B5 [3]	With additional charge			**F**		–
With flange	IM B5 [3]	With additional charge			**K**		–
For other types of construction and more information, see from page 2/94					■		. . .
Motor protection		Version					Order code
PTC thermistor with 3 temperature sensors		**Standard**				**B**	–
For other motor protection and more information, see from page 2/99						■	. . .
Terminal box position		Version					
Terminal box at top		**Standard**					**4**
For other terminal box positions and more information, see from page 2/101							■
Special versions							Order code(s)
Forced-air cooled motors w/o ext. fan/fan cover (IC 418)			**1LE1604-. . . .**	■	■■■■		**-Z F90 +. . .+. . .+. . .**
For options, see from page 2/109			**1LE1604-. . . .**	■	■■■■		**-Z . . .+. . .+. . .+. . .**

1) Operating values at rated power for 60 Hz are stored in the Drive Technology Configurator (DT Configurator; see Appendix, "Tools and engineering").

2) Parallel supply lines are required in the case of connection to ≤ 240 V. For frame size 315 with connection to ≤ 240 V, due to the high current, a drilled, removable entry plate (order code **R52**) or a larger terminal box (order code **R50**) can be used. Order codes **R52** and **R50** alter the motor dimensions.

3) Types derived from IM B3 (IM B6/7/8, IM V6 and IM V5), from IM B5 (IM V3 and IM V1) and from IM B14 (IM V19 and IM V18) are possible, provided that no requirement exists for stamping of the type on the rating plate. The basic type IM B3, IM B5 or IM B14 is stamped as standard on the rating plate. If mounted in a different position, the position must be specified to ensure that the condensation drainage holes are positioned correctly.

4) As 315 M version (not the same as 315 S according to EN 50347).

© Siemens AG 2018

Selection and ordering data

P_{rated}, 50 Hz/ P50	P_{rated}, 60 Hz/ P60 [1]	Frame size	Operating values at rated power: n_{rated} 50 Hz	T_{rated} 50 Hz	Different IE class 60 Hz/P60	η_{rated} 50 Hz, 4/4	η_{rated} 50 Hz, 3/4	η_{rated} 50 Hz, 2/4	cos-φ_{rated}, 50 Hz, 4/4	I_{rated} 50 Hz, 400 V	T_{LR}/T_{rated} 50 Hz	I_{LR}/I_{rated} 50 Hz	T_B/T_{rated} 50 Hz	L_{pfA}, 50 Hz	L_{WA}, 50 Hz	Aluminum series 1LE1003 Article No.	$m_{IM\ B3}$	J
kW	kW	FS	rpm	Nm		%	%	%		A				dB(A)	dB(A)		kg	kgm^2
• Cooling: Self-ventilated (IC 411) or with order code F90 forced-air cooled without external fan and fan cover (IC 418) • Efficiency according to IEC 60034-30: IE3 Premium Efficiency, service factor (SF) 1.15 • Insulation: Thermal class 155 (temperature class F), IP55 degree of protection, utilization in accordance with thermal class 130 (temperature class B)																		
2-pole: 3000 rpm at 50 Hz, 3600 rpm at 60 Hz [1]																		
0.75	**0.86**	**80 M**	2850	2.5		80.7	82.2	81.9	0.86	1.56	2.6	6.2	3	60	71	**1LE1003-0DA2**■-■■■■	11	0.0011
1.1	**1.27**	**80 M**	2885	3.6		82.7	83.9	83.1	0.85	2.25	3	7.1	3.3	60	71	**1LE1003-0DA3**■-■■■■	12	0.0013
1.5	**1.75**	**90 S**	2910	4.9		84.2	84.6	83.2	0.86	3	2.7	8.1	4.2	65	77	**1LE1003-0EA0**■-■■■■	15	0.0021
2.2	**2.55**	**90 L**	2910	7.2		85.9	86.8	86.1	0.88	4.2	2.6	8.3	4	65	77	**1LE1003-0EA4**■-■■■■	19	0.0031
3	**3.45**	**100 L**	2920	9.8	IE2	87.1	88	87.5	0.88	5.6	2.8	8	4.3	67	79	**1LE1003-1AA4**■-■■■■	26	0.0054
4	**4.55**	**112 M**	2945	13	IE2	88.1	89.1	88.7	0.9	7.3	1.8	8.2	3.5	69	81	**1LE1003-1BA2**■-■■■■	34	0.012
5.5	**6.3**	**132 S**	2950	17.8		89.2	90	89.7	0.9	9.9	1.8	7.4	3.6	68	80	**1LE1003-1CA0**■-■■■■	43	0.024
7.5	**8.6**	**132 S**	2950	24.5		90.1	91	91	0.92	13.1	1.9	8.3	3.9	68	80	**1LE1003-1CA1**■-■■■■	57	0.031
11	**12.6**	**160 M**	2955	35.5		91.2	91	89.5	0.89	19.6	2.4	7.9	3.8	70	82	**1LE1003-1DA2**■-■■■■	75	0.053
15	**17.3**	**160 M**	2960	48.5		91.9	92.1	91.2	0.87	27	2.7	8.7	4.3	70	82	**1LE1003-1DA3**■-■■■■	84	0.061
18.5	**21.3**	**160 L**	2955	60		92.4	92.8	92.4	0.9	32	2.8	9	4.2	70	82	**1LE1003-1DA4**■-■■■■	94	0.068
22	**24.5**	**180 M**	2950	71		92.7	93.2	92.9	0.89	38.5	2.3	7.5	3.5	67	80	**1LE1003-1EA2**■-■■■■	122	0.08
30	**33.5**	**200 L**	2955	97		93.3	93.5	92.9	0.87	53	2.5	7	3.3	67	80	**1LE1003-2AA4**■-■■■■	173	0.134
37	**41.5**	**200 L**	2955	120		93.7	94.2	94	0.88	65	2.5	7.1	3.2	67	80	**1LE1003-2AA5**■-■■■■	194	0.158

Voltages		Version				Order code
50 Hz 230 VΔ/400 VY	60 Hz [1] 460 VY	**Standard**	**2**	**2**		–
50 Hz 400 VΔ/690 VY	60 Hz [1] 460 VΔ	**Standard**	**3**	**4**		–
50 Hz 500 VY		Without additional charge	**2**	**7**		–
50 Hz 500 VΔ		Without additional charge	**4**	**0**		–
For other voltages [1] and more information, see from page 2/85			**9**	**0**		. . .
Types of construction		Version				Order code
Without flange	IM B3 [3]	**Standard**			**A**	–
With flange	IM B5 [3]	With additional charge			**F**	–
With flange	IM B14 [3]	With additional charge			**K**	–
For other types of construction and more information, see from page 2/90					■	. . .
Motor protection		Version				Order code
Without		**Standard**			**A**	–
PTC thermistor with 1 or 3 temperature sensors (frame sizes 80, 90 or 100 to 200)		With additional charge			**B**	–
For other motor protection and more information, see from page 2/98					■	. . .
Terminal box position		Version				
Terminal box at top		**Standard**				**4**
For other terminal box positions and more information, see from page 2/100						■
Special versions						Order code(s)
For options, see from page 2/102						**1LE1003-** . . . . ■-■■■■ **-Z** . . .+. . .+. . .+. . .

[1] Operating values at rated power for 60 Hz are stored in the Drive Technology Configurator (DT Configurator; see Appendix, "Tools and engineering").

[2] For converter operation of shaft heights 80 and 90, ordering with PTC thermistors and their connection to the converter is recommended.

[3] Types derived from IM B3 (IM B6/7/8, IM V6, and IM V5), from IM B5 (IM V3 and IM V1) and from IM B14 (IM V19 and IM V18) are possible, provided that no requirements exist for condensation drainage holes (**H03**) or stamping of the type on the rating plate. The basic type IM B3, IM B5 or IM B14 is stamped as standard on the rating plate. For orders with condensation drainage holes (**H03**), the type must be specified.

© Siemens AG 2018

2

Selection and ordering data (continued)

P_{rated}, 50 Hz/ P50	P_{rated}, 60 Hz/ P60 [1]	Frame size	Operating values at rated power: n_{rated} 50 Hz	T_{rated} 50 Hz	Different IE class 60 Hz/P60	η_{rated} 50 Hz, 4/4	η_{rated} 50 Hz, 3/4	η_{rated} 50 Hz, 2/4	cos-φ_{rated}, 50 Hz, 4/4	I_{rated} 50 Hz, 400 V	T_{LR}/T_{rated} 50 Hz	I_{LR}/I_{rated} 50 Hz	T_B/T_{rated} 50 Hz	L_{pfA}, 50 Hz	L_{WA}, 50 Hz	Aluminum series 1LE1003 Article No.	$m_{IM\ B3}$	J
kW	kW	FS	rpm	Nm		%	%	%		A				dB(A)	dB(A)		kg	kgm^2
• Cooling: Self-ventilated (IC 411) or with order code F90 forced-air cooled without external fan and cover (IC 418) • Efficiency according to IEC 60034-30: IE3 Premium Efficiency, service factor (SF) 1.15 • Insulation: Thermal class 155 (temperature class F), IP55 degree of protection, utilization in accordance with thermal class 130 (temperature class B)																		
4-pole: 1500 rpm at 50 Hz, 1800 rpm at 60 Hz [1]																		
0.55	**0.63**	**80 M**	1440	3.6		80.8	81.1	79.3	0.78	1.26	2.1	5.9	3.1	53	64	**1LE1003-0DB2■-■■■■**	11	0.0021
0.75	**0.86**	**80 M**	1450	4.9		82.5	82.3	79.9	0.75	1.75	2.7	7.1	3.9	53	64	**1LE1003-0DB3■-■■■■**	14	0.0029
1.1	**1.27**	**90 S**	1440	7.3		84.1	84.7	83.4	0.78	2.4	2.9	6.9	3.6	56	68	**1LE1003-0EB0■-■■■■**	16	0.0036
1.5	**1.75**	**90 L**	1445	10		85.3	85.9	84.9	0.8	3.15	2.7	7.2	3.6	56	68	**1LE1003-0EB4■-■■■■**	19	0.0049
2.2	**2.55**	**100 L**	1465	14.3	IE2	86.7	87.3	86.4	0.83	4.4	2.1	7.6	3.6	60	72	**1LE1003-1AB4■-■■■■**	30	0.014
3	**3.45**	**100 L**	1460	20		87.7	88.4	88.2	0.83	5.9	2.3	7.3	3.7	60	72	**1LE1003-1AB5■-■■■■**	30	0.014
4	**4.55**	**112 M**	1460	26		88.6	89.2	88.6	0.82	7.9	2.4	7.1	3.7	58	70	**1LE1003-1BB2■-■■■■**	34	0.017
5.5	**6.3**	**132 S**	1470	36	IE2	89.6	90.1	89.5	0.84	10.5	2.1	7.2	3.4	64	76	**1LE1003-1CB0■-■■■■**	64	0.046
7.5	**8.6**	**132 M**	1470	49	IE2	90.4	91.1	90.8	0.84	14.3	2.4	7.4	3.5	64	76	**1LE1003-1CB2■-■■■■**	64	0.046
11	**12.6**	**160 M**	1475	71		91.4	91.9	91.4	0.84	20.5	2.2	6.8	3.2	65	77	**1LE1003-1DB2■-■■■■**	83	0.083
15	**17.3**	**160 L**	1475	97		92.1	92.3	91.5	0.82	28.5	2.5	8.5	3.8	65	77	**1LE1003-1DB4■-■■■■**	100	0.099
18.5	**21.3**	**180 M**	1470	120		92.6	93.1	92.9	0.82	35	2.5	7.2	3.3	66	73	**1LE1003-1EB2■-■■■■**	134	0.13
22	**25.3**	**180 L**	1470	143		93	93.7	93.6	0.83	41	2.3	6.8	3.3	68	75	**1LE1003-1EB4■-■■■■**	142	0.14
30	**34.5**	**200 L**	1470	195	IE2	93.6	94	93.7	0.84	55	2.6	7.3	3.1	65	72	**1LE1003-2AB5■-■■■■**	189	0.22

Voltages		Version				Order code
50 Hz 230 VΔ/400 VY	60 Hz [1] 460 VY	**Standard**	2	2		–
50 Hz 400 VΔ/690 VY	60 Hz [1] 460 VΔ	**Standard**	3	4		–
50 Hz 500 VY		Without additional charge	2	7		–
50 Hz 500 VΔ		Without additional charge	4	0		–
For other voltages [1] and more information, see from page 2/85			9	0		. . .
Types of construction		Version				Order code
Without flange	IM B3 [3]	**Standard**			A	–
With flange	IM B5 [3]	With additional charge			F	–
With flange	IM B14 [3]	With additional charge			K	–
For other types of construction and more information, see from page 2/90					■	. . .
Motor protection		Version				Order code
Without		**Standard**			A	–
PTC thermistor with 1 or 3 temperature sensors (frame sizes 80, 90 or 100 to 200)		With additional charge			B	–
For other motor protection and more information, see from page 2/98					■	. . .
Terminal box position		Version				
Terminal box at top		**Standard**			4	
For other terminal box positions and more information, see from page 2/100					■	
Special versions						Order code(s)
For options, see from page 2/102					-Z	. . .+. . .+. . .+. . .

1) Operating values at rated power for 60 Hz are stored in the Drive Technology Configurator (DT Configurator; see Appendix, "Tools and engineering").

2) For converter operation of shaft heights 80 and 90, ordering with PTC thermistors and their connection to the converter is recommended.

3) Types derived from IM B3 (IM B6/7/8, IM V6, and IM V5), from IM B5 (IM V3 and IM V1) and from IM B14 (IM V19 and IM V18) are possible, provided that no requirements exist for condensation drainage holes (**H03**) or stamping of the type on the rating plate. The basic type IM B3, IM B5 or IM B14 is stamped as standard on the rating plate. For orders with condensation drainage holes (**H03**), the type must be specified.

© Siemens AG 2018

Selection and ordering data (continued)

P_{rated}, 50 Hz/ P50	P_{rated}, 60 Hz /P60 [1]	Frame size	Operating values at rated power: n_{rated} 50 Hz	T_{rated} 50 Hz	Different IE class 60 Hz/P60	η_{rated} 50 Hz, 4/4	η_{rated} 50 Hz, 3/4	η_{rated} 50 Hz, 2/4	cos-φ_{rated}, 50 Hz, 4/4	I_{rated} 50 Hz, 400 V	T_{LR}/T_{rated} 50 Hz	I_{LR}/I_{rated} 50 Hz	T_B/T_{rated} 50 Hz	L_{pfA}, 50 Hz	L_{WA}, 50 Hz	Aluminum series 1LE1003 Article No.	$m_{IM\ B3}$	J
kW	kW	FS	rpm	Nm		%	%	%		A				dB(A)	dB(A)		kg	kgm^2
• Cooling: Self-ventilated (IC 411) or with order code F90 forced-air cooled without external fan and fan cover (IC 418)																		
• Efficiency according to IEC 60034-30: IE3 Premium Efficiency, service factor (SF) 1.15																		
• Insulation: Thermal class 155 (temperature class F), IP55 degree of protection, utilization in accordance with thermal class 130 (temperature class B)																		
6-pole: 1000 rpm at 50 Hz, 1200 rpm at 60 Hz [1]																		
0.37	**0.43**	**80 M**	940	3.8		73.5	73.1	69.4	0.66	1.1	2.3	4.2	2.7	42	53	**1LE1003-0DC2■-■■■■**	12	0.0025
0.55	**0.63**	**80 M**	935	5.6		77.2	77	73.9	0.67	1.53	2.5	4.5	2.8	42	53	**1LE1003-0DC3■-■■■■**	14	0.0031
0.75	**0.86**	**90 S**	945	7.6		78.9	80	78.8	0.7	1.96	2.2	4.6	2.6	43	55	**1LE1003-0EC0■-■■■■**	16	0.004
1.1	**1.27**	**90 L**	940	11	IE1	81	82	80.5	0.69	2.85	2.3	4.6	2.7	43	55	**1LE1003-0EC4■-■■■■**	19	0.0048
1.5	**1.75**	**100 M**	970	14.8	IE2	82.5	83.1	81.5	0.73	3.6	1.9	5.2	2.8	59	71	**1LE1003-1AC4■-■■■■**	25	0.011
2.2	**2.55**	**112 M**	970	22	IE2	84.3	85	83.9	0.75	5	2.2	5.6	2.8	65	74	**1LE1003-1BC2■-■■■■**	34	0.017
3	**3.45**	**132 S**	975	30	IE2	85.6	86.9	86.6	0.77	6.6	1.6	5.3	2.4	63	75	**1LE1003-1CC0■-■■■■**	43	0.029
4	**4.55**	**132 M**	975	39	IE2	86.8	88	87.8	0.77	8.6	1.7	5.6	2.5	63	75	**1LE1003-1CC2■-■■■■**	52	0.037
5.5	**6.3**	**132 M**	975	54	IE2	88	89.1	88.8	0.77	11.7	1.8	5.7	2.6	63	75	**1LE1003-1CC3■-■■■■**	64	0.046
7.5	**8.6**	**160 M**	980	73	IE2	89.1	90.1	89.7	0.76	16	1.9	4.9	2.3	67	79	**1LE1003-1DC2■-■■■■**	93	0.098
11	**12.6**	**160 L**	975	108	IE2	90.3	91.2	90.8	0.77	23	1.9	5	2.3	67	79	**1LE1003-1DC4■-■■■■**	115	0.12
15	**18**	**180 L**	975	147	IE2	91.2	92	91.9	0.8	29.5	2.3	5.9	2.8	61	68	**1LE1003-1EC4■-■■■■**	130	0.19
18.5	**22**	**200 L**	978	181	IE2	91.7	92.5	92.4	0.79	37	2.5	5.6	2.6	64	71	**1LE1003-2AC4■-■■■■**	166	0.28
22	**26.5**	**200 L**	978	215	IE2	92.2	93.1	93.2	0.79	43.5	2.5	5.6	2.6	61	68	**1LE1003-2AC5■-■■■■**	179	0.32
8-pole: 750 rpm at 50 Hz, 900 rpm at 60 Hz [1]																		
2.2	**2.55**	**132 S**	725	29		81.9	82.9	81.8	0.63	6.2	1.4	3.6	1.8	64	77	**1LE1003-1CD0■-■■■■**	56	0.038
3	**3.45**	**132 M**	725	40		83.5	84.2	82.7	0.61	8.5	1.5	3.8	2	64	77	**1LE1003-1CD2■-■■■■**	65	0.048
4	**4.55**	**160 M**	730	52		84.8	85.6	84.5	0.66	10.3	1.6	3.6	1.8	65	78	**1LE1003-1DD2■-■■■■**	72	0.065
5.5	**6.3**	**160 M**	730	72		86.2	86.9	85.7	0.66	14	1.6	3.8	1.9	65	78	**1LE1003-1DD3■-■■■■**	86	0.083
7.5	**8.6**	**160 L**	728	98		87.3	88.2	87.7	0.65	19.1	1.6	3.8	1.9	65	78	**1LE1003-1DD4■-■■■■**	110	0.116
11	**13.2**	**180 L**	725	145		88.6	89.7	89.6	0.74	24	2.1	5.1	2.4	61	74	**1LE1003-1ED4■-■■■■**	161	0.267
15	**18**	**200 L**	730	196		89.6	90.1	89.4	0.73	33.5	3	6.8	3.7	57	70	**1LE1003-2AD5■-■■■■**	212	0.420

Voltages		Version			Order code
50 Hz 230 VΔ/400 VY	60 Hz [1] 460 VY	**Standard**	**2**	**2**	–
50 Hz 400 VΔ/690 VY	60 Hz [1] 460 VΔ	**Standard**	**3**	**4**	–
50 Hz 500 VY		Without additional charge	**2**	**7**	–
50 Hz 500 VΔ		Without additional charge	**4**	**0**	–
For other voltages [1] and more information, see from page 2/85			**9**	**0**	. . .

Types of construction		Version		Order code
Without flange	IM B3 [3]	**Standard**	**A**	–
With flange	IM B5 [3]	With additional charge	**F**	–
With flange	IM B14 [3]	With additional charge	**K**	–
For other types of construction and more information, see from page 2/90			■	. . .

Motor protection	Version		Order code
Without	**Standard**	**A**	–
PTC thermistor with 1 or 3 temperature sensors (frame sizes 80, 90 or 100 to 200)	With additional charge	**B**	–
For other motor protection and more information, see from page 2/98		■	. . .

Terminal box position	Version	
Terminal box at top	**Standard**	**4**
For other terminal box positions and more information, see from page 2/100		■

Special versions		Order code(s)
For options, see from page 2/109	**1LE1003- . . . . ■-■■■■**	**-Z** . . .+. . .+. . .+. . .

[1] Operating values at rated power for 60 Hz are stored in the Drive Technology Configurator (DT Configurator; see Appendix, "Tools and engineering").

[2] For converter operation of shaft heights 80 and 90, ordering with PTC thermistors and their connection to the converter is recommended.

[3] Types derived from IM B3 (IM B6/7/8, IM V6, and IM V5), from IM B5 (IM V3 and IM V1) and from IM B14 (IM V19 and IM V18) are possible, provided that no requirements exist for condensation drainage holes (**H03**) or stamping of the type on the rating plate. The basic type IM B3, IM B5 or IM B14 is stamped as standard on the rating plate. For orders with condensation drainage holes (**H03**), the type must be specified.

© Siemens AG 2018

2

Selection and ordering data

P_{rated}, 50 Hz/ P50	P_{rated}, 60 Hz/ P60	Frame size	Operating values at rated power: n_{rated} 50 Hz	T_{rated} 50 Hz	Different IE class 60 Hz/P60	η_{rated} 50 Hz, 4/4	η_{rated} 50 Hz, 3/4	η_{rated} 50 Hz, 2/4	cos-φ_{rated}, 50 Hz, 4/4	I_{rated} 50 Hz, 400 V	T_{LR}/T_{rated} 50 Hz	I_{LR}/I_{rated} 50 Hz	T_B/T_{rated} 50 Hz	L_{pfA}, 50 Hz	L_{WA}, 50 Hz	Aluminum series 1LE1003 Article No.	$m_{IM\ B3}$	J
kW	kW	FS	rpm	Nm		%	%	%		A				dB(A)	dB(A)		kg	kgm^2
• Cooling: Self-ventilated (IC 411) or with order code F90 forced-air cooled without external fan and fan cover (IC 418) • Efficiency according to IEC 60034-30: IE3 Premium Efficiency, service factor (SF) 1.15 • Insulation: Thermal class 155 (temperature class F), IP55 degree of protection, utilization in accordance with thermal class 130 (temperature class B)																		
2-pole: 3000 rpm at 50 Hz, 3600 rpm at 60 Hz [1]																		
11	**12.6**	**132 M**	2955	36		91.2	91.9	91.8	0.86	20	2.4	8.8	4.5	68	80	**1LE1003-1CA6■-■■■■**	57	0.031
22	**25.3**	**160 L**	2950	71		92.7	93.4	93.3	0.91	37.5	2.8	8.7	4	70	82	**1LE1003-1DA6■-■■■■**	105	0.077
30	**33.5**	**180 L**	2950	97		93.3	93.9	93.9	0.88	53	2.6	8.6	3.9	67	80	**1LE1003-1EA6■-■■■■**	140	0.094
45	**51**	**200 L**	2950	146		94	94.3	94	0.87	79	2.5	7.1	3.2	77	84	**1LE1003-2AA6■-■■■■**	194	0.16
4-pole: 1500 rpm at 50 Hz, 1800 rpm at 60 Hz [1]																		
11	**12.6**	**132**	1470	71		91.4	91.9	91.5	0.8	21.5	2.6	7.7	3.6	64	76	**1LE1003-1CB6■-■■■■**	81	0.049
18.5	**21.3**	**160 L**	1470	195	IE2	93.6	94.2	94.1	0.79	59	2.8	7.8	3.7	68	75	**1LE1003-1DB6■-■■■■**	110	0.101
30	**34.5**	**180 L**	1475	240		93.9	94.3	94.2	0.81	70	3.1	8.1	3.5	65	72	**1LE1003-1EB6■-■■■■**	154	0.173
37	**42.5**	**200 L**	1475	120		92.6	92.4	91.1	0.76	38	2.8	8.3	4	65	74	**1LE1003-2AB6■-■■■■**	205	0.275
6-pole: 1000 rpm at 50 Hz, 1200 rpm at 60 Hz [1]																		
18.5	**22**	**180 L**	975	181		91.7	92.3	91.9	0.77	38	2.6	6.9	3.3	68	80	**1LE1003-1EC6■-■■■■**	150	0.247
30	**36**	**200 L**	978	293	IE2	92.9	93.7	93.7	0.79	59	2.8	6.5	2.8	61	68	**1LE1003-2AC6■-■■■■**	220	0.434

Voltages		Version			Order code
50 Hz 230 VΔ/400 VY	60 Hz [1] 460 VY	**Standard**	**2**	**2**	–
50 Hz 400 VΔ/690 VY	60 Hz [1] 460 VΔ	**Standard**	**3**	**4**	–
50 Hz 500 VY		Without additional charge	**2**	**7**	–
50 Hz 500 VΔ		Without additional charge	**4**	**0**	–
For other voltages [1] and more information, see from page 2/85			**9**	**0**	. . .

Types of construction		Version		Order code
Without flange	IM B3 [2]	**Standard**	**A**	–
With flange	IM B5 [2]	With additional charge	**F**	–
For other types of construction and more information, see from page 2/90			■	. . .

Motor protection	Version		Order code
Without	**Standard**	**A**	–
PTC thermistor with 3 temperature sensors	With additional charge	**B**	–
For other motor protection and more information, see from page 2/98		■	. . .

Terminal box position	Version		
Terminal box at top	**Standard**	**4**	
For other terminal box positions and more information, see from page 2/100		■	

Special versions		Order code(s)
For options, see from page 2/102	**1LE1003- . . . . ■-■■■■-Z**	. . .+. . .+. . .+. . .

[1] Operating values at rated power for 60 Hz are stored in the Drive Technology Configurator (DT Configurator; see Appendix, "Tools and engineering").

[2] Types derived from IM B3 (IM B6/7/8, IM V6, and IM V5), from IM B5 (IM V3 and IM V1) and from IM B14 (IM V19 and IM V18) are possible, provided that no requirements exist for condensation drainage holes (**H03**) or stamping of the type on the rating plate. The basic type IM B3, IM B5 or IM B14 is stamped as standard on the rating plate. For orders with condensation drainage holes (**H03**), the type must be specified.

© Siemens AG 2018

Selection and ordering data

P_{rated}, 50 Hz/ P50	P_{rated}, 60 Hz/ P60 [1]	Frame size	Operating values at rated power: n_{rated} 50 Hz	T_{rated} 50 Hz	Different IE class 60 Hz/P60	η_{rated} 50 Hz, 4/4	η_{rated} 50 Hz, 3/4	η_{rated} 50 Hz, 2/4	cos-φ_{rated}, 50 Hz, 4/4	I_{rated} 50 Hz, 400 V	T_{LR}/T_{rated} 50 Hz	I_{LR}/I_{rated} 50 Hz	T_B/T_{rated} 50 Hz	L_{pfA}, 50 Hz	L_{WA}, 50 Hz	Cast-iron series 1LE1503 – *Basic Line* Article No.	$m_{IM\ B3}$	J
kW	kW	FS	rpm	Nm		%	%	%		A				dB(A)	dB(A)		kg	kgm²
• Cooling: Self-ventilated (IC 411) or with order code F90 forced-air cooled without external fan and fan cover (IC 418)																		
• Efficiency according to IEC 60034-30: IE3 Premium Efficiency, service factor (SF) 1.15																		
• Insulation: Thermal class 155 (temperature class F), IP55 degree of protection, utilization in accordance with thermal class 130 (temperature class B)																		
2-pole: 3000 rpm at 50 Hz, 3600 rpm at 60 Hz [1]																		
0.37	0.43	71 M	2850	1.2		73.8	73.3	69.7	0.76	0.95	3.5	5.8	3.5	52	63	1LE1503-0CA2■-■■■■	13	0.00045
0.55	0.63	71 M	2850	1.8		77.8	77.5	74.5	0.76	1.34	3.7	6.1	3.7	57	68	1LE1503-0CA3■-■■■■	15	0.00056
0.75	0.86	80 M	2850	2.5		80.7	82.2	81.9	0.86	1.56	2.6	6.2	3	60	71	1LE1503-0DA2■-■■■■	18	0.0011
1.1	1.27	80 M	2885	3.6		82.7	83.9	83.1	0.85	2.25	3	7.1	3.3	60	71	1LE1503-0DA3■-■■■■	21	0.0013
1.5	1.75	90 S	2910	4.9		84.2	84.6	83.2	0.86	3	2.7	8.1	4.2	65	77	1LE1503-0EA0■-■■■■	26	0.0021
2.2	2.55	90 L	2910	7.2		85.9	86.8	86.1	0.88	4.2	2.6	8.3	4	65	77	1LE1503-0EA4■-■■■■	32	0.0031
3	3.45	100 L	2920	9.8	IE2	87.1	88	87.5	0.88	5.6	2.8	8	4.3	67	79	1LE1503-1AA4■-■■■■	36	0.0054
4	4.55	112 M	2945	13	IE2	88.1	89.1	88.7	0.9	7.3	1.8	8.2	3.5	69	81	1LE1503-1BA2■-■■■■	45	0.012
5.5	6.3	132 S	2950	17.8		89.2	90	89.7	0.9	9.9	1.8	7.4	3.6	68	80	1LE1503-1CA0■-■■■■	58	0.024
7.5	8.6	132 S	2950	24.5		90.1	91	91	0.92	13.1	1.9	8.3	3.9	68	80	1LE1503-1CA1■-■■■■	73	0.031
11	12.6	160 M	2955	35.5		91.2	91	89.5	0.89	19.6	2.4	7.9	3.8	70	82	1LE1503-1DA2■-■■■■	100	0.053
15	17.3	160 M	2960	48.5		91.9	92.1	91.2	0.87	27	2.7	8.7	4.3	70	82	1LE1503-1DA3■-■■■■	110	0.061
18.5	21.3	160 L	2955	60		92.4	92.8	92.4	0.9	32	2.8	9	4.2	70	82	1LE1503-1DA4■-■■■■	127	0.068
22	24.5	180 M	2950	71		92.7	93.2	92.9	0.89	38.5	2.3	7.5	3.5	67	80	1LE1503-1EA2■-■■■■	160	0.08
30	33.5	200 L	2955	97		93.3	93.5	92.9	0.87	53	2.5	7	3.3	67	80	1LE1503-2AA4■-■■■■	225	0.134
37	41.5	200 L	2955	120		93.7	94.2	94	0.88	65	2.5	7.1	3.2	67	80	1LE1503-2AA5■-■■■■	250	0.158
45	51	225 M	2960	145		94	94.5	94.4	0.89	78	2.4	6.9	3.3	73	87	1LE1503-2BA2■-■■■■	315	0.26
55	62	250 M	2975	177		94.3	94.5	93.9	0.89	95	2.3	6.7	3.1	73	87	1LE1503-2CA2■-■■■■	385	0.46
75	84	280 S	2975	241	IE2	94.7	94.8	94.1	0.89	128	2.4	6.8	3	74	88	1LE1503-2DA0■-■■■■	510	0.77
90	101	280 M	2975	289	IE2	95	95.1	94.6	0.9	152	2.4	7.2	3.1	74	88	1LE1503-2DA2■-■■■■	590	0.94
110	123	315 S	2982	352		95.2	95.4	94.9	0.91	183	2.4	7.1	3.1	75	89	1LE1503-3AA0■-■■■■	750	1.4
132	148	315 M	2982	423		95.4	95.5	95.2	0.91	220	2.5	7.2	3.1	75	89	1LE1503-3AA2■-■■■■	880	1.6
160	180	315 L	2982	512	IE2	95.6	95.7	95.2	0.92	265	2.8	7.8	3.3	77	91	1LE1503-3AA4■-■■■■	980	1.9
200	224	315 L	2982	640		95.8	95.9	95.5	0.92	330	2.5	7.2	3	77	91	1LE1503-3AA5■-■■■■	1150	2.3

Voltages [2]		Version					Order code
50 Hz 230 VΔ/400 VY	60 Hz [1] 460 VY	**Standard**	2	2			–
50 Hz 400 VΔ/690 VY	60 Hz [1] 460 VΔ	**Standard**	3	4			–
50 Hz 500 VY		Without additional charge	2	7			–
50 Hz 500 VΔ		Without additional charge	4	0			–
For other voltages [1] and more information, see from page 2/88			9	0			. . .
Types of construction		Version					Order code
Without flange	IM B3 [3]	**Standard**			A		–
With flange	IM B5 [3]	With additional charge			F		–
For other types of construction and more information, see from page 2/94					■		. . .
Motor protection		Version					Order code
Without		**Standard**				A	–
PTC thermistor with 3 temperature sensors		With additional charge				B	–
For other motor protection and more information, see from page 2/99						■	. . .
Terminal box position		Version					
Terminal box at top		**Standard**					4
For other terminal box positions and more information, see from page 2/101							■
Special versions							Order code(s)
Forced-air cooled motors w/o ext. fan/fan cover (IC 418)		1LE1503-. . . . ■-■■■■-Z					F90+. . .+. . .+. . .
For options, see from page 2/109		1LE1503-. . . . ■-■■■■-Z					. . .+. . .+. . .+. . .

[1] Operating values at rated power for 60 Hz are stored in the Drive Technology Configurator (DT Configurator; see Appendix, "Tools and engineering").

[2] Parallel supply lines are required in the case of connection to ≤ 240 V. For frame size 315 with connection to ≤ 240 V, due to the high current, a drilled, removable entry plate (order code **R52**) or a larger terminal box (order code **R50**) can be used. Order codes **R52** and **R50** alter the motor dimensions.

[3] Types derived from IM B3 (IM B6/7/8, IM V6 and IM V5), from IM B5 (IM V3 and IM V1) and from IM B14 (IM V19 and IM V18) are possible, provided that no requirement exists for stamping of the type on the rating plate. The basic type IM B3, IM B5 or IM B14 is stamped as standard on the rating plate. If mounted in a different position, the position must be specified to ensure that the condensation drainage holes are positioned correctly.

© Siemens AG 2018

2

Selection and ordering data (continued)

P_{rated}, 50 Hz/ P50	P_{rated}, 60 Hz/ P60 [1]	Frame size	Operating values at rated power: n rated 50 Hz	T rated 50 Hz	Different IE class 60 Hz/P60	η rated 50 Hz, 4/4	η rated 50 Hz, 3/4	η rated 50 Hz, 2/4	cos-φ rated, 50 Hz, 4/4	I rated 50 Hz, 400 V	T_{LR}/T_{ra} ted 50 Hz	I_{LR}/I_{ra} ted 50 Hz	T_B/T_{ra} ted 50 Hz	L_{pfA}, 50 Hz	L_{WA}, 50 Hz	Cast-iron series 1LE1503 – *Basic Line* Article No.	$m_{IM\ B3}$	J
kW	kW	FS	rpm	Nm		%	%	%		A				dB(A)	dB(A)		kg	kgm²
• Cooling: Self-ventilated (IC 411) or with order code F90 forced-air cooled without external fan and fan cover (IC 418) • Efficiency according to IEC 60034-30: IE3 Premium Efficiency, service factor (SF) 1.15 • Insulation: Thermal class 155 (temperature class F), IP55 degree of protection, utilization in accordance with thermal class 130 (temperature class B)																		
4-pole: 1500 rpm at 50 Hz, 1800 rpm at 60 Hz [1]																		
0.25	0.29	71 M	1395	1.7		73.5	73.7	70.4	0.72	0.68	2.5	4.2	2.6	44	55	1LE1503-0CB2■-■■■■	13	0.00095
0.37	0.43	71 M	1410	2.6		77.3	76.8	73.2	0.7	0.99	3.1	4.8	3.1	56	67	1LE1503-0CB3■-■■■■	16	0.0014
0.55	0.63	80 M	1440	3.6		80.8	81.1	79.3	0.78	1.26	2.1	5.9	3.1	53	64	1LE1503-0DB2■-■■■■	18	0.0021
0.75	0.86	80 M	1450	4.9		82.5	82.3	79.9	0.75	1.75	2.7	7.1	3.9	53	64	1LE1503-0DB3■-■■■■	22	0.0029
1.1	1.27	90 S	1440	7.3		84.1	84.7	83.4	0.78	2.4	2.9	6.9	3.6	56	68	1LE1503-0EB0■-■■■■	25	0.0036
1.5	1.75	90 L	1445	10		85.3	85.9	84.9	0.8	3.15	2.7	7.2	3.6	56	68	1LE1503-0EB4■-■■■■	31	0.0049
2.2	2.55	100 L	1465	14.3	IE2	86.7	87.3	86.4	0.83	4.4	2.1	7.6	3.6	60	72	1LE1503-1AB4■-■■■■	40	0.014
3	3.45	100 L	1460	20		87.7	88.4	88.2	0.83	5.9	2.3	7.3	3.7	60	72	1LE1503-1AB5■-■■■■	40	0.014
4	4.55	112 M	1460	26		88.6	89.2	88.6	0.82	7.9	2.4	7.1	3.7	58	70	1LE1503-1BB2■-■■■■	46	0.017
5.5	6.3	132 S	1470	36	IE2	89.6	90.1	89.5	0.84	10.5	2.1	7.2	3.4	64	76	1LE1503-1CB0■-■■■■	74	0.046
7.5	8.6	132 M	1470	49	IE2	90.4	91.1	90.8	0.84	14.3	2.4	7.4	3.5	64	76	1LE1503-1CB2■-■■■■	80	0.046
11	12.6	160 M	1475	71		91.4	91.9	91.4	0.84	20.5	2.2	6.8	3.2	65	77	1LE1503-1DB2■-■■■■	109	0.083
15	17.3	160 L	1475	97		92.1	92.3	91.5	0.82	28.5	2.5	8.5	3.8	65	77	1LE1503-1DB4■-■■■■	127	0.099
18.5	21.3	180 M	1470	120		92.6	93.1	92.9	0.82	35	2.5	7.2	3.3	66	73	1LE1503-1EB2■-■■■■	165	0.13
22	25.3	180 L	1470	143		93	93.7	93.6	0.83	41	2.3	6.8	3.3	68	75	1LE1503-1EB4■-■■■■	170	0.14
30	34.5	200 L	1470	195	IE2	93.6	94	93.7	0.84	55	2.6	7.3	3.1	65	72	1LE1503-2AB5■-■■■■	240	0.22
37	42.5	225 S	1478	239	IE2	93.9	94.5	94.4	0.86	66	2.5	6.4	2.7	65	78	1LE1503-2BB0■-■■■■	285	0.42
45	52	225 M	1478	291	IE2	94.2	94.9	95.1	0.86	80	2.6	6.4	2.7	65	78	1LE1503-2BB2■-■■■■	320	0.47
55	63	250 M	1482	354	IE2	94.6	95.1	95	0.87	96	2.5	6.8	2.9	66	79	1LE1503-2CB2■-■■■■	420	0.85
75	86	280 S	1485	482	IE2	95	95.3	95	0.86	133	2.5	6.9	3	69	83	1LE1503-2DB0■-■■■■	570	1.4
90	104	280 M	1485	579	IE2	95.2	95.5	95.3	0.87	157	2.6	7.2	3	70	84	1LE1503-2DB2■-■■■■	670	1.7
110	127	315 S	1488	706		95.4	95.8	95.5	0.87	191	2.6	6.8	2.9	70	84	1LE1503-3AB0■-■■■■	760	2.2
132	152	315 M	1490	846		95.6	95.9	95.9	0.87	230	2.8	7.3	3	73	87	1LE1503-3AB2■-■■■■	960	2.9
160	184	315 L	1490	1025		95.8	96.1	96.1	0.87	275	2.9	7.3	3.1	73	87	1LE1503-3AB4■-■■■■	990	3.1
200	230	315 L	1488	1284	IE2	96	96.3	96.1	0.88	340	3.2	7.4	3	73	87	1LE1503-3AB5■-■■■■	1190	3.7

Voltages [2]		Version				Order code
50 Hz 230 VΔ/400 VY	60 Hz [1] 460 VY	**Standard**	2	2		–
50 Hz 400 VΔ/690 VY	60 Hz [1] 460 VΔ	**Standard**	3	4		–
50 Hz 500 VY		Without additional charge	2	7		–
50 Hz 500 VΔ		Without additional charge	4	0		–
For other voltages [1] and more information, see from page 2/88			9	0		. . .
Types of construction		Version				Order code
Without flange	IM B3 [3]	**Standard**			A	–
With flange	IM B5 [3]	With additional charge			F	–
For other types of construction and more information, see from page 2/94					■	. . .
Motor protection		Version				Order code
Without		**Standard**			A	–
PTC thermistor with 3 temperature sensors		With additional charge			B	–
For other motor protection and more information, see from page 2/99					■	. . .
Terminal box position		Version				
Terminal box at top		**Standard**			4	
For other terminal box positions and more information, see from page 2/101					■	
Special versions						Order code(s)
Forced-air cooled motors w/o ext. fan/fan cover (IC 418)		1LE1503-. . . . ■-■■■■-Z				F90+. . .+. . .+. . .
For options, see from page 2/109		1LE1503-. . . . ■-■■■■-Z				. . .+. . .+. . .+. . .

1) Operating values at rated power for 60 Hz are stored in the Drive Technology Configurator (DT Configurator; see Appendix, "Tools and engineering").

2) Parallel supply lines are required in the case of connection to ≤ 240 V. For frame size 315 with connection to ≤ 240 V, due to the high current, a drilled, removable entry plate (order code **R52**) or a larger terminal box (order code **R50**) can be used. Order codes **R52** and **R50** alter the motor dimensions.

3) Types derived from IM B3 (IM B6/7/8, IM V6 and IM V5), from IM B5 (IM V3 and IM V1) and from IM B14 (IM V19 and IM V18) are possible, provided that no requirement exists for stamping of the type on the rating plate. The basic type IM B3, IM B5 or IM B14 is stamped as standard on the rating plate. If mounted in a different position, the position must be specified to ensure that the condensation drainage holes are positioned correctly.

© Siemens AG 2018

Selection and ordering data (continued)

P_{rated}, 50 Hz/ P50	P_{rated}, 60 Hz/ P60 [1]	Frame size	Operating values at rated power: n_{rated} 50 Hz	T_{rated} 50 Hz	Different IE class 60 Hz/P60	η_{rated} 50 Hz, 4/4	η_{rated} 50 Hz, 3/4	η_{rated} 50 Hz, 2/4	cos-φ_{rated}, 50 Hz, 4/4	I_{rated} 50 Hz, 400 V	T_{LR}/T_{rated} 50 Hz	I_{LR}/I_{rated} 50 Hz	T_B/T_{rated} 50 Hz	L_{pfA}, 50 Hz	L_{WA}, 50 Hz	Cast-iron series 1LE1503 – *Basic Line* Article No.	$m_{IM\ B3}$	J
kW	kW	FS	rpm	Nm		%	%	%		A				dB(A)	dB(A)		kg	kgm^2
• Cooling: Self-ventilated (IC 411) or with order code F90 forced-air cooled without external fan and fan cover (IC 418) • Efficiency according to IEC 60034-30: IE3 Premium Efficiency, service factor (SF) 1.15 • Insulation: Thermal class 155 (temperature class F), IP55 degree of protection, utilization in accordance with thermal class 130 (temperature class B)																		
6-pole: 1000 rpm at 50 Hz, 1200 rpm at 60 Hz [1]																		
0.18	0.21	71 M	885	1.9		63.9	64.8	60.8	0.69	0.59	2.3	2.8	2.3	39	50	1LE1503-0CC2■-■■■■	13	0.001
0.25	0.29	71 M	885	2.7		68.6	69.5	66.2	0.69	0.76	2.6	3.2	2.6	46	57	1LE1503-0CC3■-■■■■	16	0.0015
0.37	0.43	80 M	940	3.8		73.5	73.1	69.4	0.66	1.1	2.3	4.2	2.7	42	53	1LE1503-0DC2■-■■■■	19	0.0025
0.55	0.63	80 M	935	5.6		77.2	77	73.9	0.67	1.53	2.5	4.5	2.8	42	53	1LE1503-0DC3■-■■■■	22	0.0031
0.75	0.86	90 S	945	7.6		78.9	80	78.8	0.7	1.96	2.2	4.6	2.6	43	55	1LE1503-0EC0■-■■■■	26	0.004
1.1	1.27	90 L	940	11	IE1	81	82	80.5	0.69	2.85	2.3	4.6	2.7	43	55	1LE1503-0EC4■-■■■■	32	0.0048
1.5	1.75	100 L	970	14.8	IE2	82.5	83.1	81.5	0.73	3.6	1.9	5.2	2.8	59	71	1LE1503-1AC4■-■■■■	36	0.011
2.2	2.55	112 M	970	22	IE2	84.3	85	83.9	0.75	5	2.2	5.6	2.8	65	74	1LE1503-1BC2■-■■■■	53	0.017
3	3.45	132 S	975	30	IE2	85.6	86.9	86.6	0.77	6.6	1.6	5.3	2.4	63	75	1LE1503-1CC0■-■■■■	61	0.029
4	4.55	132 M	975	39	IE2	86.8	88	87.8	0.77	8.6	1.7	5.6	2.5	63	75	1LE1503-1CC2■-■■■■	70	0.037
5.5	6.3	132 M	975	54	IE2	88	89.1	88.8	0.77	11.7	1.8	5.7	2.6	63	75	1LE1503-1CC3■-■■■■	83	0.046
7.5	8.6	160 M	980	73	IE2	89.1	90.1	89.7	0.76	16	1.9	4.9	2.3	67	79	1LE1503-1DC2■-■■■■	122	0.098
11	12.6	160 L	975	108	IE2	90.3	91.2	90.8	0.77	23	1.9	5	2.3	67	79	1LE1503-1DC4■-■■■■	147	0.12
15	18	180 L	975	147	IE2	91.2	92	91.9	0.8	29.5	2.3	5.9	2.8	61	68	1LE1503-1EC4■-■■■■	180	0.19
18.5	22	200 L	978	181	IE2	91.7	92.5	92.4	0.79	37	2.5	5.6	2.6	64	71	1LE1503-2AC4■-■■■■	215	0.28
22	26.5	200 L	978	215	IE2	92.2	93.1	93.2	0.79	43.5	2.5	5.6	2.6	61	68	1LE1503-2AC5■-■■■■	230	0.32
30	36	225 M	982	292	IE2	92.9	93.6	93.5	0.83	56	2.6	6.6	3	64	77	1LE1503-2BC2■-■■■■	325	0.67
37	44.5	250 M	985	359	IE2	93.3	94	94	0.85	67	2.7	7	2.9	62	75	1LE1503-2CC2■-■■■■	405	1
45	54	280 S	988	435	IE2	93.7	94.3	94.2	0.85	82	3	6.8	2.8	60	74	1LE1503-2DC0■-■■■■	510	1.4
55	66	280 M	988	532	IE2	94.1	94.6	94.4	0.85	99	3.2	7.2	3	60	74	1LE1503-2DC2■-■■■■	560	1.6
75	90	315 S	990	723		94.6	94.9	94.4	0.84	136	2.6	7.5	3.1	63	78	1LE1503-3AC0■-■■■■	750	2.6
90	108	315 M	991	867	IE2	94.9	95.2	94.9	0.85	161	2.5	6.7	2.8	63	78	1LE1503-3AC2■-■■■■	890	3.1
110	132	315 L	991	1060	IE2	95.1	95.5	95.3	0.84	199	2.8	7.2	3	63	78	1LE1503-3AC4■-■■■■	990	3.9
132	158	315 L	991	1272	IE2	95.4	95.9	95.8	0.84	240	2.7	7.2	3	67	82	1LE1503-3AC5■-■■■■	1110	4.4
160	192	315 L	991	1542	IE2	95.6	95.8	95.4	0.83	290	3.3	7.7	3.5	67	82	1LE1503-3AC6■-■■■■	1160	4.6

Voltages [2]		Version			Order code
50 Hz 230 VΔ/400 VY	60 Hz [1] 460 VY	**Standard**	2	2	–
50 Hz 400 VΔ/690 VY	60 Hz [1] 460 VΔ	**Standard**	3	4	–
50 Hz 500 VY		Without additional charge	2	7	–
50 Hz 500 VΔ		Without additional charge	4	0	–
For other voltages [1] and more information, see from page 2/88			9	0	...

Types of construction		Version		Order code
Without flange	IM B3 [3]	**Standard**	A	–
With flange	IM B5 [3]	With additional charge	F	–
For other types of construction and more information, see from page 2/94			■	...

Motor protection	Version		Order code
Without	**Standard**	A	–
PTC thermistor with 3 temperature sensors	With additional charge	B	–
For other motor protection and more information, see from page 2/99		■	...

Terminal box position	Version		
Terminal box at top	**Standard**	4	
For other terminal box positions and more information, see from page 2/101		■	

Special versions		Order code(s)
Forced-air cooled motors w/o ext. fan/fan cover (IC 418)	1LE1503-....■-■■■■-Z	F90+...+...+...
For options, see from page 2/109	1LE1503-....■-■■■■-Z	...+...+...+...

[1] Operating values at rated power for 60 Hz are stored in the Drive Technology Configurator (DT Configurator; see Appendix, "Tools and engineering").

[2] Parallel supply lines are required in the case of connection to ≤ 240 V. For frame size 315 with connection to ≤ 240 V, due to the high current, a drilled, removable entry plate (order code **R52**) or a larger terminal box (order code **R50**) can be used. Order codes **R52** and **R50** alter the motor dimensions.

[3] Types derived from IM B3 (IM B6/7/8, IM V6 and IM V5), from IM B5 (IM V3 and IM V1) and from IM B14 (IM V19 and IM V18) are possible, provided that no requirement exists for stamping of the type on the rating plate. The basic type IM B3, IM B5 or IM B14 is stamped as standard on the rating plate. If mounted in a different position, the position must be specified to ensure that the condensation drainage holes are positioned correctly.

© Siemens AG 2018

2

Selection and ordering data

P_{rated}, 50 Hz/ P50	P_{rated}, 60 Hz/ P60 [1]	Frame size	Operating values at rated power: n_{rated} 50 Hz	T_{rated} 50 Hz	Different IE class 60 Hz/P60	η_{rated} 50 Hz, 4/4	η_{rated} 50 Hz, 3/4	η_{rated} 50 Hz, 2/4	cos-φ_{rated}, 50 Hz, 4/4	I_{rated} 50 Hz, 400 V	T_{LR}/T_{rated} 50 Hz	I_{LR}/I_{rated} 50 Hz	T_B/T_{rated} 50 Hz	L_{pfA}, 50 Hz	L_{WA}, 50 Hz	Cast-iron series 1LE1603 – *Performance Line* Article No.	$m_{IM\ B3}$	J
kW	kW	FS	rpm	Nm		%	%	%		A				dB(A)	dB(A)		kg	kgm^2
• Cooling: Self-ventilated (IC 411) or with order code F90 forced-air cooled without external fan and fan cover (IC 418)																		
• Efficiency according to IEC 60034-30: IE3 Premium Efficiency, service factor (SF) 1.15																		
• Insulation: Thermal class 155 (temperature class F), IP55 degree of protection, utilization in accordance with thermal class 130 (temperature class B)																		
2-pole: 3000 rpm at 50 Hz, 3600 rpm at 60 Hz [1]																		
3	**3.45**	**100 L**	2920	9.8	IE2	87.1	88	87.5	0.88	5.6	2.8	8	4.3	67	79	**1LE1603-1AA4■-■■■■**	36	0.0054
4	**4.55**	**112 M**	2945	13	IE2	88.1	89.1	88.7	0.9	7.3	1.8	8.2	3.5	69	81	**1LE1603-1BA2■-■■■■**	45	0.012
5.5	**6.3**	**132 S**	2950	17.8		89.2	90	89.7	0.9	9.9	1.8	7.4	3.6	68	80	**1LE1603-1CA0■-■■■■**	58	0.024
7.5	**8.6**	**132 S**	2950	24.5		90.1	91	91	0.92	13.1	1.9	8.3	3.9	68	80	**1LE1603-1CA1■-■■■■**	73	0.031
11	**12.6**	**160 M**	2955	35.5		91.2	91	89.5	0.89	19.6	2.4	7.9	3.8	70	82	**1LE1603-1DA2■-■■■■**	100	0.053
15	**17.3**	**160 M**	2960	48.5		91.9	92.1	91.2	0.87	27	2.7	8.7	4.3	70	82	**1LE1603-1DA3■-■■■■**	110	0.061
18.5	**21.3**	**160 L**	2955	60		92.4	92.8	92.4	0.9	32	2.8	9	4.2	70	82	**1LE1603-1DA4■-■■■■**	127	0.068
22	**24.5**	**180 M**	2950	71		92.7	93.2	92.9	0.89	38.5	2.3	7.5	3.5	67	80	**1LE1603-1EA2■-■■■■**	160	0.08
30	**33.5**	**200 L**	2955	97		93.3	93.5	92.9	0.87	53	2.5	7	3.3	67	80	**1LE1603-2AA4■-■■■■**	225	0.134
37	**41.5**	**200 L**	2955	120		93.7	94.2	94	0.88	65	2.5	7.1	3.2	67	80	**1LE1603-2AA5■-■■■■**	250	0.158
45	**51**	**225 M**	2960	145		94	94.5	94.4	0.89	78	2.4	6.9	3.3	73	87	**1LE1603-2BA2■-■■■■**	315	0.26
55	**62**	**250 M**	2975	177		94.3	94.5	93.9	0.89	95	2.3	6.7	3.1	73	87	**1LE1603-2CA2■-■■■■**	385	0.46
75	**84**	**280 S**	2975	241	IE2	94.7	94.8	94.1	0.89	128	2.4	6.8	3	74	88	**1LE1603-2DA0■-■■■■**	510	0.77
90	**101**	**280 M**	2975	289	IE2	95	95.1	94.6	0.9	152	2.4	7.2	3.1	74	88	**1LE1603-2DA2■-■■■■**	590	0.94
110	**123**	**315 S**	2982	352		95.2	95.4	94.9	0.91	183	2.4	7.1	3.1	75	89	**1LE1603-3AA0■-■■■■**	750	1.4
132	**148**	**315 M**	2982	423		95.4	95.5	95.2	0.91	220	2.5	7.2	3.1	75	89	**1LE1603-3AA2■-■■■■**	880	1.6
160	**180**	**315 L**	2982	512	IE2	95.6	95.7	95.2	0.92	265	2.8	7.8	3.3	77	91	**1LE1603-3AA4■-■■■■**	980	1.9
200	**224**	**315 L**	2982	640		95.8	95.9	95.5	0.92	330	2.5	7.2	3	77	91	**1LE1603-3AA5■-■■■■**	1150	2.3

Voltages [2]		Version			Order code
50 Hz 230 VΔ/400 VY	60 Hz [1] 460 VY	**Standard**	2	2	–
50 Hz 400 VΔ/690 VY	60 Hz [1] 460 VΔ	**Standard**	3	4	–
50 Hz 500 VY		Without additional charge	2	7	–
50 Hz 500 VΔ		Without additional charge	4	0	–
For other voltages [1] and more information, see from page 2/88			9	0	. . .

Types of construction		Version			Order code
Without flange	IM B3 [3]	**Standard**		A	–
With flange	IM B5 [3]	With additional charge		F	–
For other types of construction and more information, see from page 2/94				■	. . .

Motor protection	Line	Version			Order code
PTC thermistor with 3 temperature sensors		**Standard**		B	–
For other motor protection and more information, see from page 2/99				■	. . .

Terminal box position	Version			Order code
Terminal box at top	**Standard**		4	
For other terminal box positions and more information, see from page 2/101			■	

Special versions		Order code(s)
Forced-air cooled motors w/o ext. fan/fan cover (IC 418)	**1LE1603-. . . . ■-■■■■-Z**	**F90+. . .+. . .+. . .**
For options, see from page 2/109	**1LE1603-. . . . ■-■■■■-Z**	**. . .+. . .+. . .+. . .**

1) Operating values at rated power for 60 Hz are stored in the Drive Technology Configurator (DT Configurator; see Appendix, "Tools and engineering").

2) Parallel supply lines are required in the case of connection to ≤ 240 V. For frame size 315 with connection to ≤ 240 V, due to the high current, a drilled, removable entry plate (order code **R52**) or a larger terminal box (order code **R50**) can be used. Order codes **R52** and **R50** alter the motor dimensions.

3) Types derived from IM B3 (IM B6/7/8, IM V6 and IM V5), from IM B5 (IM V3 and IM V1) and from IM B14 (IM V19 and IM V18) are possible, provided that no requirement exists for stamping of the type on the rating plate. The basic type IM B3, IM B5 or IM B14 is stamped as standard on the rating plate. If mounted in a different position, the position must be specified to ensure that the condensation drainage holes are positioned correctly.

© Siemens AG 2018

Selection and ordering data (continued)

P_{rated}, 50 Hz/ P50	P_{rated}, 60 Hz/ P60 [1]	Frame size	Operating values at rated power: n_{rated} 50 Hz	T_{rated} 50 Hz	Different IE class 60 Hz/P60	η_{rated} 50 Hz, 4/4	η_{rated} 50 Hz, 3/4	η_{rated} 50 Hz, 2/4	cos-φ_{rated}, 50 Hz, 4/4	I_{rated} 50 Hz, 400 V	T_{LR}/T_{rated} 50 Hz	I_{LR}/I_{rated} 50 Hz	T_B/T_{rated} 50 Hz	L_{pfA}, 50 Hz	L_{WA}, 50 Hz	Cast-iron series 1LE1603 – *Performance Line* Article No.	$m_{IM\ B3}$	J
kW	kW	FS	rpm	Nm		%	%	%		A				dB(A)	dB(A)		kg	kgm^2
• Cooling: Self-ventilated (IC 411) or with order code F90 forced-air cooled without external fan and fan cover (IC 418) • Efficiency according to IEC 60034-30: IE3 Premium Efficiency, service factor (SF) 1.15 • Insulation: Thermal class 155 (temperature class F), IP55 degree of protection, utilization in accordance with thermal class 130 (temperature class B)																		
4-pole: 1500 rpm at 50 Hz, 1800 rpm at 60 Hz [1]																		
2.2	**2.55**	**100 L**	1465	14.3	IE2	86.7	87.3	86.4	0.83	4.4	2.1	7.6	3.6	60	72	**1LE1603-1AB4■-■■■■**	40	0.014
3	**3.45**	**100 L**	1460	20		87.7	88.4	88.2	0.83	5.9	2.3	7.3	3.7	60	72	**1LE1603-1AB5■-■■■■**	40	0.014
4	**4.55**	**112 M**	1460	26		88.6	89.2	88.6	0.82	7.9	2.4	7.1	3.7	58	70	**1LE1603-1BB2■-■■■■**	46	0.017
5.5	**6.3**	**132 S**	1470	36	IE2	89.6	90.1	89.5	0.84	10.5	2.1	7.2	3.4	64	76	**1LE1603-1CB0■-■■■■**	74	0.046
7.5	**8.6**	**132 M**	1470	49	IE2	90.4	91.1	90.8	0.84	14.3	2.4	7.4	3.5	64	76	**1LE1603-1CB2■-■■■■**	80	0.046
11	**12.6**	**160 M**	1475	71		91.4	91.9	91.4	0.84	20.5	2.2	6.8	3.2	65	77	**1LE1603-1DB2■-■■■■**	109	0.083
15	**17.3**	**160 L**	1475	97		92.1	92.3	91.5	0.82	28.5	2.5	8.5	3.8	65	77	**1LE1603-1DB4■-■■■■**	127	0.099
18.5	**21.3**	**180 M**	1470	120		92.6	93.1	92.9	0.82	35	2.5	7.2	3.3	66	73	**1LE1603-1EB2■-■■■■**	165	0.13
22	**25.3**	**180 L**	1470	143		93	93.7	93.6	0.83	41	2.3	6.8	3.3	68	75	**1LE1603-1EB4■-■■■■**	170	0.14
30	**34.5**	**200 L**	1470	195	IE2	93.6	94	93.7	0.84	55	2.6	7.3	3.1	65	72	**1LE1603-2AB5■-■■■■**	240	0.22
37	**42.5**	**225 S**	1478	239	IE2	93.9	94.5	94.4	0.86	66	2.5	6.4	2.7	65	78	**1LE1603-2BB0■-■■■■**	285	0.42
45	**52**	**225 M**	1478	291	IE2	94.2	94.9	95.1	0.86	80	2.6	6.4	2.7	65	78	**1LE1603-2BB2■-■■■■**	320	0.47
55	**63**	**250 M**	1482	354	IE2	94.6	95.1	95	0.87	96	2.5	6.8	2.9	66	79	**1LE1603-2CB2■-■■■■**	420	0.85
75	**86**	**280 S**	1485	482	IE2	95	95.3	95	0.86	133	2.5	6.9	3	69	83	**1LE1603-2DB0■-■■■■**	570	1.4
90	**104**	**280 M**	1485	579	IE2	95.2	95.5	95.3	0.87	157	2.6	7.2	3	70	84	**1LE1603-2DB2■-■■■■**	670	1.7
110	**127**	**315 S**	1488	706		95.4	95.8	95.5	0.87	191	2.6	6.8	2.9	70	84	**1LE1603-3AB0■-■■■■**	760	2.2
132	**152**	**315 M**	1490	846		95.6	95.9	95.9	0.87	230	2.8	7.3	3	73	87	**1LE1603-3AB2■-■■■■**	960	2.9
160	**184**	**315 L**	1490	1025		95.8	96.1	96.1	0.87	275	2.9	7.3	3.1	73	87	**1LE1603-3AB4■-■■■■**	990	3.1
200	**230**	**315 L**	1488	1284	IE2	96	96.3	96.1	0.88	340	3.2	7.4	3	73	87	**1LE1603-3AB5■-■■■■**	1190	3.7

Voltages [2]		Version			Order code
50 Hz 230 VΔ/400 VY	60 Hz [1] 460 VY	**Standard**	**2**	**2**	–
50 Hz 400 VΔ/690 VY	60 Hz [1] 460 VΔ	**Standard**	**3**	**4**	–
50 Hz 500 VY		Without additional charge	**2**	**7**	–
50 Hz 500 VΔ		Without additional charge	**4**	**0**	–
For other voltages [1] and more information, see from page 2/88			**9**	**0**	. . .

Types of construction		Version		Order code
Without flange	IM B3 [3]	**Standard**	**A**	–
With flange	IM B5 [3]	With additional charge	**F**	–
For other types of construction and more information, see from page 2/94			■	. . .

Motor protection	Line	Version		Order code
PTC thermistor with 3 temperature sensors		**Standard**	**A**	–
For other motor protection and more information, see from page 2/99			■	. . .

Terminal box position	Version		
Terminal box at top	**Standard**	**4**	
For other terminal box positions and more information, see from page 2/101		■	

Special versions		Order code(s)
Forced-air cooled motors w/o ext. fan/fan cover (IC 418)	**1LE1603-. . . . ■-■■■■-Z**	**F90+. . .+. . .+. . .**
For options, see from page 2/109	**1LE1603-. . . . ■-■■■■-Z**	**. . .+. . .+. . .+. . .**

[1] Operating values at rated power for 60 Hz are stored in the Drive Technology Configurator (DT Configurator; see Appendix, "Tools and engineering").

[2] Parallel supply lines are required in the case of connection to ≤ 240 V. For frame size 315 with connection to ≤ 240 V, due to the high current, a drilled, removable entry plate (order code **R52**) or a larger terminal box (order code **R50**) can be used. Order codes **R52** and **R50** alter the motor dimensions.

[3] Types derived from IM B3 (IM B6/7/8, IM V6 and IM V5), from IM B5 (IM V3 and IM V1) and from IM B14 (IM V19 and IM V18) are possible, provided that no requirement exists for stamping of the type on the rating plate. The basic type IM B3, IM B5 or IM B14 is stamped as standard on the rating plate. If mounted in a different position, the position must be specified to ensure that the condensation drainage holes are positioned correctly.

© Siemens AG 2018

2

Selection and ordering data (continued)

P_{rated}, 50 Hz/ P50	P_{rated}, 60 Hz/ P60 1)	Frame size	Operating values at rated power: n_{rated} 50 Hz	T_{rated} 50 Hz	Different IE class 60 Hz/P60	η_{rated} 50 Hz, 4/4	η_{rated} 50 Hz, 3/4	η_{rated} 50 Hz, 2/4	cos-φ_{rated}, 50 Hz, 4/4	I_{rated} 50 Hz, 400 V	T_{LR}/T_{rated} 50 Hz	I_{LR}/I_{rated} 50 Hz	T_B/T_{rated} 50 Hz	L_{pfA}, 50 Hz	L_{WA}, 50 Hz	Cast-iron series 1LE1603 – *Performance Line* Article No.	$m_{IM\ B3}$	J
kW	kW	FS	rpm	Nm		%	%	%		A				dB(A)	dB(A)		kg	kgm^2
• Cooling: Self-ventilated (IC 411) or with order code F90 forced-air cooled without external fan and fan cover (IC 418) • Efficiency according to IEC 60034-30: IE3 Premium Efficiency, service factor (SF) 1.15 • Insulation: Thermal class 155 (temperature class F), IP55 degree of protection, utilization in accordance with thermal class 130 (temperature class B)																		
6-pole: 1000 rpm at 50 Hz, 1200 rpm at 60 Hz 1)																		
1.5	1.75	100 L	970	14.8	IE2	82.5	83.1	81.5	0.73	3.6	1.9	5.2	2.8	59	71	1LE1603-1AC4■-■■■■	36	0.011
2.2	2.55	112 M	970	22	IE2	84.3	85	83.9	0.75	5	2.2	5.6	2.8	65	74	1LE1603-1BC2■-■■■■	53	0.017
3	3.45	132 S	975	30	IE2	85.6	86.9	86.6	0.77	6.6	1.6	5.3	2.4	63	75	1LE1603-1CC0■-■■■■	61	0.029
4	4.55	132 M	975	39	IE2	86.8	88	87.8	0.77	8.6	1.7	5.6	2.5	63	75	1LE1603-1CC2■-■■■■	70	0.037
5.5	6.3	132 M	975	54	IE2	88	89.1	88.8	0.77	11.7	1.8	5.7	2.6	63	75	1LE1603-1CC3■-■■■■	83	0.046
7.5	8.6	160 M	980	73	IE2	89.1	90.1	89.7	0.76	16	1.9	4.9	2.3	67	79	1LE1603-1DC2■-■■■■	122	0.098
11	12.6	160 L	975	108	IE2	90.3	91.2	90.8	0.77	23	1.9	5	2.3	67	79	1LE1603-1DC4■-■■■■	147	0.12
15	18	180 L	975	147	IE2	91.2	92	91.9	0.8	29.5	2.3	5.9	2.8	61	68	1LE1603-1EC4■-■■■■	180	0.19
18.5	22	200 L	978	181	IE2	91.7	92.5	92.4	0.79	37	2.5	5.6	2.6	64	71	1LE1603-2AC4■-■■■■	215	0.28
22	26.5	200 L	978	215	IE2	92.2	93.1	93.2	0.79	43.5	2.5	5.6	2.6	61	68	1LE1603-2AC5■-■■■■	230	0.32
30	36	225 M	982	292	IE2	92.9	93.6	93.5	0.83	56	2.6	6.6	3	64	77	1LE1603-2BC2■-■■■■	325	0.67
37	44.5	250 M	985	359	IE2	93.3	94	94	0.85	67	2.7	7	2.9	62	75	1LE1603-2CC2■-■■■■	405	1
45	54	280 S	988	435	IE2	93.7	94.3	94.2	0.85	82	3	6.8	2.8	60	74	1LE1603-2DC0■-■■■■	510	1.4
55	66	280 M	988	532	IE2	94.1	94.6	94.4	0.85	99	3.2	7.2	3	60	74	1LE1603-2DC2■-■■■■	560	1.6
75	90	315 S	990	723		94.6	94.9	94.4	0.84	136	2.6	7.5	3.1	63	78	1LE1603-3AC0■-■■■■	750	2.6
90	108	315 M	991	867	IE2	94.9	95.2	94.9	0.85	161	2.5	6.7	2.8	63	78	1LE1603-3AC2■-■■■■	890	3.1
110	132	315 L	991	1060	IE2	95.1	95.5	95.3	0.84	199	2.8	7.2	3	63	78	1LE1603-3AC4■-■■■■	990	3.9
132	158	315 L	991	1272	IE2	95.4	95.9	95.8	0.84	240	2.7	7.2	3	67	82	1LE1603-3AC5■-■■■■	1110	4.4
160	192	315 L	991	1542	IE2	95.6	95.8	95.4	0.83	290	3.3	7.7	3.5	67	82	1LE1603-3AC6■-■■■■	1160	4.6

Voltages 2)		Version					Order code
50 Hz 230 VΔ/400 VY	60 Hz 1) 460 VY	**Standard**	2	2			–
50 Hz 400 VΔ/690 VY	60 Hz 1) 460 VΔ	**Standard**	3	4			–
50 Hz 500 VY		Without additional charge	2	7			–
50 Hz 500 VΔ		Without additional charge	4	0			–
For other voltages 1) and more information, see from page 2/88			9	0			. . .
Types of construction		Version					Order code
Without flange	IM B3 3)	**Standard**			A		–
With flange	IM B5 3)	With additional charge			F		–
For other types of construction and more information, see from page 2/94					■		. . .
Motor protection		Version					Order code
PTC thermistor with 3 temperature sensors		**Standard**				B	–
For other motor protection and more information, see from page 2/99						■	. . .
Terminal box position		Version					
Terminal box at top		**Standard**					4
For other terminal box positions and more information, see from page 2/101							■

Special versions		Order code(s)
Forced-air cooled motors w/o ext. fan/fan cover (IC 418)	1LE1603- . . . . ■-■■■■-Z	F90+. . .+. . .+. . .
For options, see from page 2/109	1LE1603- . . . . ■-■■■■-Z	. . .+. . .+. . .+. . .

1) Operating values at rated power for 60 Hz are stored in the Drive Technology Configurator (DT Configurator; see Appendix, "Tools and engineering").

2) Parallel supply lines are required in the case of connection to ≤ 240 V. For frame size 315 with connection to ≤ 240 V, due to the high current, a drilled, removable entry plate (order code **R52**) or a larger terminal box (order code **R50**) can be used. Order codes **R52** and **R50** alter the motor dimensions.

3) Types derived from IM B3 (IM B6/7/8, IM V6 and IM V5), from IM B5 (IM V3 and IM V1) and from IM B14 (IM V19 and IM V18) are possible, provided that no requirement exists for stamping of the type on the rating plate. The basic type IM B3, IM B5 or IM B14 is stamped as standard on the rating plate. If mounted in a different position, the position must be specified to ensure that the condensation drainage holes are positioned correctly.

© Siemens AG 2018

Selection and ordering data (continued)

P_{rated}, 50 Hz/ P50	P_{rated}, 60 Hz/ P60 [1]	Frame size	Operating values at rated power: n_{rated} 50 Hz	T_{rated} 50 Hz	Different IE class 60 Hz/P60	η_{rated} 50 Hz, 4/4	η_{rated} 50 Hz, 3/4	η_{rated} 50 Hz, 2/4	cos-φ_{rated}, 50 Hz, 4/4	I_{rated} 50 Hz, 400 V	T_{LR}/T_{rated} 50 Hz	I_{LR}/I_{rated} 50 Hz	T_B/T_{rated} 50 Hz	L_{pfA}, 50 Hz	L_{WA}, 50 Hz	Cast-iron series 1LE1603 – *Performance Line* Article No.	$m_{IM\ B3}$	J
kW	kW	FS	rpm	Nm		%	%	%		A				dB(A)	dB(A)		kg	kgm^2
• Cooling: Self-ventilated (IC 411) or with order code F90 forced-air cooled without external fan and fan cover (IC 418) • Efficiency according to IEC 60034-30: IE3 Premium Efficiency, service factor (SF) 1.15 • Insulation: Thermal class 155 (temperature class F), IP55 degree of protection, utilization in accordance with thermal class 130 (temperature class B)																		
8-pole: 750 rpm at 50 Hz, 900 rpm at 60 Hz [1]																		
2.2	2.55	132 S	725	29		81.9	82.9	81.8	0.63	6.2	1.4	3.6	1.8	64	77	1LE1603-1CD0■-■■■■	66	0.038
3	3.45	132 M	725	40		83.5	84.2	82.7	0.61	8.5	1.5	3.8	2	64	77	1LE1603-1CD2■-■■■■	78	0.048
4	4.55	160 M	730	52		84.8	85.6	84.5	0.66	10.3	1.6	3.6	1.8	65	78	1LE1603-1DD2■-■■■■	98	0.065
5.5	6.3	160 M	730	72		86.2	86.9	85.7	0.66	14	1.6	3.8	1.9	65	78	1LE1603-1DD3■-■■■■	110	0.083
7.5	8.6	160 L	728	98		87.3	88.2	87.7	0.65	19.1	1.6	3.8	1.9	65	78	1LE1603-1DD4■-■■■■	135	0.116
11	13.2	180 L	725	145		88.6	89.7	89.6	0.74	24	2.1	5.1	2.4	61	74	1LE1603-1ED4■-■■■■	190	0.267
15	18	200 L	730	196		89.6	90.1	89.4	0.73	33.5	3	6.8	3.7	57	70	1LE1603-2AD5■-■■■■	255	0.420
18.5	22	225 S	732	241		90.1	90.6	90	0.75	39.5	2.5	5.9	3	56	70	1LE1603-2BD0■-■■■■	270	0.50
22	26.5	225 M	732	287		90.6	91.4	91.2	0.77	45.5	2.6	5.9	2.9	56	70	1LE1603-2BD2■-■■■■	280	0.55
30	36	250 M	735	390		91.3	91.8	91.5	0.79	60	2.6	6.1	3	60	74	1LE1603-2CD2■-■■■■	370	0.86
37	44.5	280 S	736	480		91.8	92.5	92.4	0.78	75	2.3	5.4	2.4	63	77	1LE1603-2DD0■-■■■■	460	1.1
45	54	280 M	738	582	IE2	92.2	92.8	92.6	0.8	88	2.5	5.9	2.5	65	79	1LE1603-2DD2■-■■■■	550	1.6
55	66	315 S	740	710		92.5	92.9	92.6	0.81	106	2.3	6	2.7	66	81	1LE1603-3AD0■-■■■■	650	2.0
75	90	315 M	738	970		93.1	93.5	93.3	0.81	144	2.3	5.9	2.7	69	84	1LE1603-3AD2■-■■■■	720	2.5
90	108	315 L	740	1161		93.4	94.2	94.3	0.83	168	2.2	5.8	2.5	71	85	1LE1603-3AD4■-■■■■	860	3.1
110	132	315 L	740	1419		93.7	94.2	94.1	0.82	205	2.7	6.7	2.9	74	88	1LE1603-3AD5■-■■■■	980	3.9
132	158	315 L	740	1703		94	94.4	94.1	0.81	250	2.9	7.2	3.3	76	90	1LE1603-3AD6■-■■■■	1160	4.6

Voltages [2]		Version			Order code
50 Hz 230 VΔ/400 VY	60 Hz [1] 460 VY	**Standard**	2	2	–
50 Hz 400 VΔ/690 VY	60 Hz [1] 460 VΔ	**Standard**	3	4	–
50 Hz 500 VY		Without additional charge	2	7	–
50 Hz 500 VΔ		Without additional charge	4	0	–
For other voltages [1] and more information, see from page 2/88			9	0	. . .

Types of construction		Version		Order code
Without flange	IM B3 [3]	**Standard**	A	–
With flange	IM B5 [3]	With additional charge	F	–
For other types of construction and more information, see from page 2/94			■	. . .

Motor protection	Version		Order code
PTC thermistor with 3 temperature sensors	**Standard**	B	–
For other motor protection and more information, see from page 2/99		■	. . .

Terminal box position	Version		
Terminal box at top	**Standard**	4	
For other terminal box positions and more information, see from page 2/101		■	

Special versions		Order code(s)
Forced-air cooled motors w/o ext. fan/fan cover (IC 418)	1LE1603-. . . . ■-■■■■-Z	F90+. . .+. . .+. . .
For options, see from page 2/109	1LE1603-. . . . ■-■■■■-Z	. . .+. . .+. . .+. . .

[1] Operating values at rated power for 60 Hz are stored in the Drive Technology Configurator (DT Configurator; see Appendix, "Tools and engineering").

[2] Parallel supply lines are required in the case of connection to ≤ 240 V. For frame size 315 with connection to ≤ 240 V, due to the high current, a drilled, removable entry plate (order code **R52**) or a larger terminal box (order code **R50**) can be used. Order codes **R52** and **R50** alter the motor dimensions.

[3] Types derived from IM B3 (IM B6/7/8, IM V6 and IM V5), from IM B5 (IM V3 and IM V1) and from IM B14 (IM V19 and IM V18) are possible, provided that no requirement exists for stamping of the type on the rating plate. The basic type IM B3, IM B5 or IM B14 is stamped as standard on the rating plate. If mounted in a different position, the position must be specified to ensure that the condensation drainage holes are positioned correctly.

© Siemens AG 2018

2

Selection and ordering data

P_{rated}, 50 Hz/ P50	P_{rated}, 60 Hz/ P60	Frame size	Operating values at rated power: n_{rated} 50 Hz	T_{rated} 50 Hz	Different IE class 60 Hz/P60	η_{rated} 50 Hz, 4/4	η_{rated} 50 Hz, 3/4	η_{rated} 50 Hz, 2/4	cos-φ_{rated}, 50 Hz, 4/4	I_{rated} 50 Hz, 400 V	T_{LR}/T_{rated} 50 Hz	I_{LR}/I_{rated} 50 Hz	T_B/T_{rated} 50 Hz	L_{pfA}, 50 Hz	L_{WA}, 50 Hz	Cast-iron series 1LE1503 – *Basic Line* Article No.	$m_{IM\ B3}$	J
kW	kW	FS	rpm	Nm		%	%	%		A				dB(A)	dB(A)		kg	kgm^2
• Cooling: Self-ventilated (IC 411) or with order code F90 forced-air cooled without external fan and fan cover (IC 418) • Efficiency according to IEC 60034-30: IE3 Premium Efficiency, service factor (SF) 1.15 • Insulation: Thermal class 155 (temperature class F), IP55 degree of protection, utilization in accordance with thermal class 130 (temperature class B)																		
2-pole: 3000 rpm at 50 Hz, 3600 rpm at 60 Hz [1]																		
11	**12.6**	**132 M**	2955	36		91.2	91.9	91.8	0.86	20	2.4	8.8	4.5	68	80	**1LE1503-1CA6■-■■■■**	80	0.031
22	**25.3**	**160 L**	2950	71		92.7	93.4	93.3	0.91	37.5	2.8	8.7	4	70	82	**1LE1503-1DA6■-■■■■**	137	0.077
30	**33.5**	**180 L**	2950	97		93.3	93.9	93.9	0.88	53	2.6	8.6	3.9	67	80	**1LE1503-1EA6■-■■■■**	173	0.094
45	**51**	**200 L**	2950	146		94	94.3	94	0.87	79	2.5	7.1	3.2	77	84	**1LE1503-2AA6■-■■■■**	245	0.16
55	**62**	**225 M**	2965	177		94.3	94.6	94.4	0.88	96	2.8	8	3.7	76	89	**1LE1503-2BA6■-■■■■**	370	0.31
75	**84**	**250 M**	2970	241		94.7	94.9	94.5	0.9	127	2.2	6.8	2.9	78	92	**1LE1503-2CA6■-■■■■**	455	0.56
110	**123**	**280 M**	2975	353		95.2	95.4	95.1	0.91	183	2.5	7.7	3.2	78	92	**1LE1503-2DA6■-■■■■**	660	1.1
4-pole: 1500 rpm at 50 Hz, 1800 rpm at 60 Hz [1]																		
11	**12.6**	**132 M**	1470	71		91.4	91.9	91.5	0.8	21.5	2.6	7.7	3.6	64	76	**1LE1503-1CB6■-■■■■**	97	0.049
18.5	**21.3**	**160 L**	1475	120		92.6	92.4	91.1	0.76	38	2.8	8.3	4	65	74	**1LE1503-1DB6■-■■■■**	126	0.101
30	**34.5**	**180 L**	1470	195	IE2	93.6	94.2	94.1	0.79	59	2.8	7.8	3.7	68	75	**1LE1503-1EB6■-■■■■**	193	0.173
37	**42.5**	**200 L**	1475	240		93.9	94.3	94.2	0.81	70	3.1	8.1	3.5	65	72	**1LE1503-2AB6■-■■■■**	260	0.275
55	**63**	**225 M**	1478	355	IE2	94.6	95.3	95.5	0.86	98	2.8	6.5	2.7	70	83	**1LE1503-2BB6■-■■■■**	405	0.65
75	**86**	**250 M**	1486	482		95	95.2	94.8	0.85	134	3	7.9	3.4	70	83	**1LE1503-2CB6■-■■■■**	510	1.1
110	**127**	**280 M**	1486	707	IE2	95.4	95.5	95	0.85	196	3	8.3	3.4	73	87	**1LE1503-2DB6■-■■■■**	710	1.8
6-pole: 1000 rpm at 50 Hz, 1200 rpm at 60 Hz [1]																		
18.5	**22**	**180 L**	975	181		91.7	92.3	91.9	0.77	38	2.6	6.9	3.3	68	80	**1LE1503-1EC6■-■■■■**	185	0.247
30	**36**	**200 L**	978	293	IE2	92.9	93.7	93.7	0.79	59	2.8	6.5	2.8	61	68	**1LE1503-2AC6■-■■■■**	264	0.434
37	**44.5**	**225 M**	982	360	IE2	93.3	93.9	93.7	0.81	71	3	7.1	3.2	65	79	**1LE1503-2BC6■-■■■■**	395	0.84
45	**54**	**250 M**	986	436	IE2	93.7	94.3	94.2	0.84	83	2.8	7	2.9	68	81	**1LE1503-2CC6■-■■■■**	480	1.3
75	**90**	**280 M**	988	725		94.6	95	94.8	0.83	138	3.7	8.6	3.3	68	81	**1LE1503-2DC6■-■■■■**	630	1.9

Voltages [2]		Version					Order code
50 Hz 230 VΔ/400 VY	60 Hz [1] 460 VY	**Standard**	**2**	**2**			–
50 Hz 400 VΔ/690 VY	60 Hz [1] 460 VΔ	**Standard**	**3**	**4**			–
50 Hz 500 VY		Without additional charge	**2**	**7**			–
50 Hz 500 VΔ		Without additional charge	**4**	**0**			–
For other voltages [1] and more information, see from page 2/88			**9**	**0**			. . .
Types of construction		Version					Order code
Without flange	IM B3 [3]	**Standard**			**A**		–
With flange	IM B5 [3]	With additional charge			**F**		–
With flange	IM B14 [3]	With additional charge			**K**		–
For other types of construction and more information, see from page 2/94					■		. . .
Motor protection		Version					Order code
Without		**Standard**				**A**	–
PTC thermistor with 3 temperature sensors		With additional charge				**B**	–
For other motor protection and more information, see from page 2/99						■	. . .
Terminal box position		Version					
Terminal box at top		**Standard**					**4**
For other terminal box positions and more information, see from page 2/101							■
Special versions							Order code(s)
For options, see from page 2/109			**1LE1503-. . . . ■-■■■■**				**-Z** . . .+. . .+. . .+. . .

1) Operating values at rated power for 60 Hz are stored in the Drive Technology Configurator (DT Configurator; see Appendix, "Tools and engineering").

2) Parallel supply lines are required in the case of connection to ≤ 240 V. For frame size 315 with connection to ≤ 240 V, due to the high current, a drilled, removable entry plate (order code **R52**) or a larger terminal box (order code **R50**) can be used. Order codes **R52** and **R50** alter the motor dimensions.

3) Types derived from IM B3 (IM B6/7/8, IM V6 and IM V5), from IM B5 (IM V3 and IM V1) and from IM B14 (IM V19 and IM V18) are possible, provided that no requirement exists for stamping of the type on the rating plate. The basic type IM B3, IM B5 or IM B14 is stamped as standard on the rating plate. If mounted in a different position, the position must be specified to ensure that the condensation drainage holes are positioned correctly.

© Siemens AG 2018

Selection and ordering data

P_{rated}, 50 Hz/ P50	P_{rated}, 60 Hz/ P60	Frame size	Operating values at rated power: n_{rated} 50 Hz	T_{rated} 50 Hz	Different IE class 60 Hz/P60	η_{rated} 50 Hz, 4/4	η_{rated} 50 Hz, 3/4	η_{rated} 50 Hz, 2/4	cos-φ_{rated}, 50 Hz, 4/4	I_{rated} 50 Hz, 400 V	T_{LR}/T_{rated} 50 Hz	I_{LR}/I_{rated} 50 Hz	T_B/T_{rated} 50 Hz	L_{pfA}, 50 Hz	L_{WA}, 50 Hz	Cast-iron series 1LE1603 – *Performance Line* Article No.	$m_{IM\ B3}$	J
kW	kW	FS	rpm	Nm		%	%	%		A				dB(A)	dB(A)		kg	kgm^2
• Cooling: Self-ventilated (IC 411) or with order code F90 forced-air cooled without external fan and fan cover (IC 418) • Efficiency according to IEC 60034-30: IE3 Premium Efficiency, service factor (SF) 1.15 • Insulation: Thermal class 155 (temperature class F), IP55 degree of protection, utilization in accordance with thermal class 130 (temperature class B)																		
2-pole: 3000 rpm at 50 Hz, 3600 rpm at 60 Hz [1]																		
11	**12.6**	**132 M**	2955	36		91.2	91.9	91.8	0.86	20	2.4	8.8	4.5	68	80	**1LE1603-1CA6■-■■■■**	80	0.031
22	**25.3**	**160 L**	2950	71		92.7	93.4	93.3	0.91	37.5	2.8	8.7	4	70	82	**1LE1603-1DA6■-■■■■**	137	0.077
30	**33.5**	**180 L**	2950	97		93.3	93.9	93.9	0.88	53	2.6	8.6	3.9	67	80	**1LE1603-1EA6■-■■■■**	173	0.094
45	**51**	**200 L**	2950	146		94	94.3	94	0.87	79	2.5	7.1	3.2	77	84	**1LE1603-2AA6■-■■■■**	245	0.16
55	**62**	**225 M**	2965	177		94.3	94.6	94.4	0.88	96	2.8	8	3.7	76	89	**1LE1603-2BA6■-■■■■**	370	0.31
75	**84**	**250 M**	2970	241		94.7	94.9	94.5	0.9	127	2.2	6.8	2.9	78	92	**1LE1603-2CA6■-■■■■**	455	0.56
110	**123**	**280 M**	2975	353		95.2	95.4	95.1	0.91	183	2.5	7.7	3.2	78	92	**1LE1603-2DA6■-■■■■**	660	1.1
4-pole: 1500 rpm at 50 Hz, 1800 rpm at 60 Hz [1]																		
11	**12.6**	**132 M**	1470	71		91.4	91.9	91.5	0.8	21.5	2.6	7.7	3.6	64	76	**1LE1603-1CB6■-■■■■**	97	0.049
18.5	**21.3**	**160 L**	1475	120		92.6	92.4	91.1	0.76	38	2.8	8.3	4	65	74	**1LE1603-1DB6■-■■■■**	126	0.101
30	**34.5**	**180 L**	1470	195	IE2	93.6	94.2	94.1	0.79	59	2.8	7.8	3.7	68	75	**1LE1603-1EB6■-■■■■**	193	0.173
37	**42.5**	**200 L**	1475	240		93.9	94.3	94.2	0.81	70	3.1	8.1	3.5	65	72	**1LE1603-2AB6■-■■■■**	260	0.275
55	**63**	**225 M**	1478	355	IE2	94.6	95.3	95.5	0.86	98	2.8	6.5	2.7	70	83	**1LE1603-2BB6■-■■■■**	405	0.65
75	**86**	**250 M**	1486	482		95	95.2	94.8	0.85	134	3	7.9	3.4	70	83	**1LE1603-2CB6■-■■■■**	510	1.1
110	**127**	**280 M**	1486	707	IE2	95.4	95.5	95	0.85	196	3	8.3	3.4	73	87	**1LE1603-2DB6■-■■■■**	710	1.8
6-pole: 1000 rpm at 50 Hz, 1200 rpm at 60 Hz [1]																		
18.5	**22**	**180 L**	975	181		91.7	92.3	91.9	0.77	38	2.6	6.9	3.3	68	80	**1LE1603-1EC6■-■■■■**	185	0.247
30	**36**	**200 L**	978	293	IE2	92.9	93.7	93.7	0.79	59	2.8	6.5	2.8	61	68	**1LE1603-2AC6■-■■■■**	264	0.434
37	**44.5**	**225 M**	982	360	IE2	93.3	93.9	93.7	0.81	71	3	7.1	3.2	65	79	**1LE1603-2BC6■-■■■■**	395	0.84
45	**54**	**250 M**	986	436	IE2	93.7	94.3	94.2	0.84	83	2.8	7	2.9	68	81	**1LE1603-2CC6■-■■■■**	480	1.3
75	**90**	**280 M**	988	725		94.6	95	94.8	0.83	138	3.7	8.6	3.3	68	81	**1LE1603-2DC6■-■■■■**	630	1.9

Voltages [2]		Version				Order code
50 Hz 230 VΔ/400 VY	60 Hz [1] 460 VY	**Standard**	**2**	**2**		–
50 Hz 400 VΔ/690 VY	60 Hz [1] 460 VΔ	**Standard**	**3**	**4**		–
50 Hz 500 VY		Without additional charge	**2**	**7**		–
50 Hz 500 VΔ		Without additional charge	**4**	**0**		–
For other voltages [1] and more information, see from page 2/88			**9**	**0**		. . .
Types of construction		Version				Order code
Without flange	IM B3 [3]	**Standard**			**A**	–
With flange	IM B5 [3]	With additional charge			**F**	–
With flange	IM B14 [3]	With additional charge			**K**	–
For other types of construction and more information, see from page 2/94					■	. . .
Motor protection		Version				Order code
PTC thermistor with 3 temperature sensors		**Standard**			**B**	–
For other motor protection and more information, see from page 2/99					■	. . .
Terminal box position		Version				
Terminal box at top		**Standard**			**4**	
For other terminal box positions and more information, see from page 2/101					■	
Special versions						Order code(s)
For options, see from page 2/109						**1LE1603-. . . . ■-■■■■-Z** . . .+. . .+. . .+. . .

1) Operating values at rated power for 60 Hz are stored in the Drive Technology Configurator (DT Configurator; see Appendix, "Tools and engineering").

2) Parallel supply lines are required in the case of connection to ≤ 240 V. For frame size 315 with connection to ≤ 240 V, due to the high current, a drilled, removable entry plate (order code **R52**) or a larger terminal box (order code **R50**) can be used. Order codes **R52** and **R50** alter the motor dimensions.

3) Types derived from IM B3 (IM B6/7/8, IM V6 and IM V5), from IM B5 (IM V3 and IM V1) and from IM B14 (IM V19 and IM V18) are possible, provided that no requirement exists for stamping of the type on the rating plate. The basic type IM B3, IM B5 or IM B14 is stamped as standard on the rating plate. If mounted in a different position, the position must be specified to ensure that the condensation drainage holes are positioned correctly.

© Siemens AG 2018

2

Selection and ordering data

P_{rated}, 50 Hz/ P50	P_{rated}, 60 Hz/ P60 [1]	Frame size	Operating values at rated power: n_{rated}, 50 Hz	T_{rated}, 50 Hz	Different IE class 60 Hz/P60	η_{rated}, 50 Hz, 4/4	η_{rated}, 50 Hz, 3/4	η_{rated}, 50 Hz, 2/4	cos-φ_{rated}, 50 Hz, 4/4	I_{rated}, 50 Hz, 400 V	T_{LR}/T_{rated}, 50 Hz	I_{LR}/I_{rated}, 50 Hz	T_B/T_{rated}, 50 Hz	L_{pfA}, 50 Hz	L_{WA}, 50 Hz	Aluminum series 1LE1001 Article No.	$m_{IM\ B3}$	J
kW	kW	FS	rpm	Nm		%	%	%		A				dB(A)	dB(A)	▲ New	kg	kgm²
• Cooling: Self-ventilated (IC 411) or with order code F90 forced-air cooled without external fan and fan cover (IC 418)																		
• Efficiency according to IEC 60034-30: IE2 High Efficiency, service factor (SF) 1.15																		
• Insulation: Thermal class 155 (temperature class F), IP55 degree of protection, utilization in accordance with thermal class 130 (temperature class B)																		
2-pole: 3000 rpm at 50 Hz, 3600 rpm at 60 Hz [1]																		
0.18	**0.21**	**63 M**	2835	2.5	IE1	72.1	72.6	69.9	0.86	1.75	2.1	5.2	2.3	64	71	▲ **1LE1001-0BA2■-■■■■**	4	0.00022
0.25	**0.29**	**63 M**	2840	3.7	IE1	75.0	75.7	73.4	0.86	2.45	2.5	5.7	2.5	64	71	▲ **1LE1001-0BA3■-■■■■**	5	0.00026
0.37	**0.43**	**71 M**	2770	1.3		69.5	70.5	67.9	0.81	0.95	2.5	4.1	2.5	58	69	▲ **1LE1001-0CA2■-■■■■**	6	0.00035
0.55	**0.63**	**71 M**	2780	1.9		74.1	75.2	72.9	0.80	1.34	2.6	4.6	2.6	58	69	▲ **1LE1001-0CA3■-■■■■**	7	0.00045
0.75	**0.86**	**80 M**	2805	2.6		77.4	80	80.1	0.84	1.67	1.9	4.9	2.3	60	71	**1LE1001-0DA2■-■■■■**	9	0.0008
1.1	**1.27**	**80 M**	2835	3.7		79.6	81.3	80.9	0.83	2.4	2.7	6	3.1	60	71	**1LE1001-0DA3■-■■■■**	11	0.0011
1.5	**1.75**	**90 S**	2885	4.9		81.3	81.7	79.8	0.84	3.15	2.7	6.9	3.6	65	77	**1LE1001-0EA0■-■■■■**	13	0.0017
2.2	**2.55**	**90 L**	2890	7.3		83.2	83.7	82	0.85	4.5	2.5	7.1	3.7	65	77	**1LE1001-0EA4■-■■■■**	15	0.0021
3	**3.45**	**100 L**	2905	9.9		84.6	85.5	84.6	0.84	6.1	2.3	7	3.3	67	79	**1LE1001-1AA4■-■■■■**	21	0.0044
4	**4.55**	**112 M**	2945	13		85.8	86.2	85.1	0.85	7.9	2.1	8	3.6	69	81	**1LE1001-1BA2■-■■■■**	27	0.0092
5.5	**6.3**	**132 S**	2950	18		87	88	87.6	0.87	10.5	1.8	6.6	2.9	68	80	**1LE1001-1CA0■-■■■■**	39	0.02
7.5	**8.6**	**132 S**	2950	24		88.1	88.5	87.6	0.87	14.1	2.2	7.5	3.1	68	80	**1LE1001-1CA1■-■■■■**	43	0.024
11	**12.6**	**160 M**	2955	36		89.4	89.3	88	0.87	20.5	2.1	7.4	3.2	70	82	**1LE1001-1DA2■-■■■■**	67	0.045
15	**17.3**	**160 M**	2955	48		90.3	90.7	90	0.88	27	2.4	7.6	3.4	70	82	**1LE1001-1DA3■-■■■■**	75	0.053
18.5	**21.3**	**160 L**	2955	60		90.9	91.3	90.6	0.88	33.5	2.9	7.9	3.6	70	82	**1LE1001-1DA4■-■■■■**	84	0.061
22	**24.5**	**180 M**	2940	71		91.3	91.8	91.3	0.87	40	2.7	7.4	3.6	77	84	**1LE1001-1EA2■-■■■■**	123	0.069
30	**33.5**	**200 L**	2960	97		92	92.3	91.8	0.87	54	2.5	6.9	3.3	78	85	**1LE1001-2AA4■-■■■■**	158	0.13
37	**41.5**	**200 L**	2960	119		92.5	93	92.7	0.88	66	2.7	7.4	3.5	78	85	**1LE1001-2AA5■-■■■■**	178	0.15

Voltages		Version			Order code
50 Hz 230 VΔ/400 VY	60 Hz [1] 460 VY	**Standard**	2	2	–
50 Hz 400 VΔ/690 VY	60 Hz [1] 460 VΔ	**Standard**	3	4	–
50 Hz 500 VY		Without additional charge	2	7	–
50 Hz 500 VΔ		Without additional charge	4	0	–
For other voltages [1] and more information, see from page 2/85			9	0	. . .

Types of construction		Version		Order code
Without flange	IM B3 [3]	**Standard**	A	–
With flange	IM B5 [3]	With additional charge	F	–
With flange	IM B14 [3]	With additional charge	K	–
For other types of construction and more information, see from page 2/90			■	. . .

Motor protection	Version		Order code
Without	**Standard**	A	–
PTC thermistor with 1 or 3 temperature sensors (frame sizes 63 to 90 or 100 to 200)	With additional charge	B	–
For other motor protection and more information, see from page 2/98		■	. . .

Terminal box position	Version	
Terminal box at top	**Standard**	4
For other terminal box positions and more information, see from page 2/100		■

Special versions		Order code(s)
Forced-air cooled motors w/o ext. fan/fan cover (IC 418)	**1LE1001-. . . . ■-■■■■-Z**	**F90** +. . .+. . .+. . .
For options, see from page 2/102	**1LE1001-. . . . ■-■■■■-Z**	. . .+. . .+. . .+. . .

1) Operating values at rated power for 60 Hz are stored in the Drive Technology Configurator (DT Configurator; see Appendix, "Tools and engineering").

2) For converter operation of shaft heights 63 and 90, ordering with PTC thermistors and their connection to the converter is recommended.

3) Types derived from IM B3 (IM B6/7/8, IM V6, and IM V5), from IM B5 (IM V3 and IM V1) and from IM B14 (IM V19 and IM V18) are possible, provided that no requirements exist for condensation drainage holes (**H03**) or stamping of the type on the rating plate. The basic type IM B3, IM B5 or IM B14 is stamped as standard on the rating plate. For orders with condensation drainage holes (**H03**), the type must be specified.

© Siemens AG 2018

Please note minimum legal efficiencies in the European Economic Area!

IE2

Selection and ordering data (continued)

P_{rated}, 50 Hz/ P50	P_{rated}, 60 Hz/ P60 [1]	Frame size	Operating values at rated power: n_{rated}, 50 Hz	T_{rated}, 50 Hz	Different IE class 50 Hz/P50, 60 Hz/P60	η_{rated}, 50 Hz, 4/4	η_{rated}, 50 Hz, 3/4	η_{rated}, 50 Hz, 2/4	cos-φ_{rated}, 50 Hz, 4/4	I_{rated}, 50 Hz, 400 V	T_{LR}/T_{rated}, 50 Hz	I_{LR}/I_{rated}, 50 Hz	T_B/T_{rated}, 50 Hz	L_{pfA}, 50 Hz	L_{WA}, 50 Hz	Aluminum series 1LE1001 Article No.	$m_{IM\ B3}$	J
kW	kW	FS	rpm	Nm		%	%	%		A				dB(A)	dB(A)	▲ New	kg	kgm^2
• Cooling: Self-ventilated (IC 411) or with order code F90 forced-air cooled without external fan and fan cover (IC 418)																		
• Efficiency according to IEC 60034-30: IE2 High Efficiency, service factor (SF) 1.15																		
• Insulation: Thermal class 155 (temperature class F), IP55 degree of protection, utilization in accordance with thermal class 130 (temperature class B)																		
4-pole: 1500 rpm at 50 Hz, 1800 rpm at 60 Hz [1]																		
0.12	**0.14**	**63 M**	1385	3.8	IE1	70.0	70.7	67.7	0.79	1.44	2.1	3.7	2.2	59	66	▲ **1LE1001-0BB2■-■■■■**	5	0.00037
0.18	**0.21**	**63 M**	1385	5.2	IE1	72.1	72.0	67.0	0.76	1.85	2.1	3.6	2.3	59	66	▲ **1LE1001-0BB3■-■■■■**	5	0.00045
0.25	**0.29**	**71 M**	1395	1.7		68.5	68.4	64.2	0.69	0.76	2.4	3.7	2.5	50	61	▲ **1LE1001-0CB2■-■■■■**	6	0.00076
0.37	**0.43**	**71 M**	1380	2.6		72.7	73.2	69.9	0.72	1.02	2.3	3.8	2.4	50	61	▲ **1LE1001-0CB3■-■■■■**	7	0.00095
0.55	**0.63**	**80 M**	1440	3.6		77.1	76.8	73.7	0.74	1.39	2.2	5.3	3.1	53	64	**1LE1001-0DB2■-■■■■**	10	0.0017
0.75	**0.86**	**80 M**	1440	5		79.6	79.9	77.5	0.76	1.79	2.2	5.6	3.1	53	64	**1LE1001-0DB3■-■■■■**	11	0.0021
1.1	**1.27**	**90 S**	1425	7.4		81.4	81.8	80	0.78	2.5	2.3	5.6	2.9	56	68	**1LE1001-0EB0■-■■■■**	13	0.0028
1.5	**1.75**	**90 L**	1435	10		82.8	83.5	82.2	0.79	3.3	2.6	6.4	3.4	56	68	**1LE1001-0EB4■-■■■■**	16	0.0036
2.2	**2.55**	**100 L**	1455	14		84.3	85.1	84.2	0.81	4.65	2.1	6.9	3.3	60	72	**1LE1001-1AB4■-■■■■**	21	0.0086
3	**3.45**	**100 L**	1455	20		85.5	86.4	85.6	0.82	6.2	2	6.9	3.1	60	72	**1LE1001-1AB5■-■■■■**	25	0.011
4	**4.55**	**112 M**	1460	26		86.6	87.3	86.4	0.81	8.2	2.5	7.1	3.2	58	70	**1LE1001-1BB2■-■■■■**	29	0.014
5.5	**6.3**	**132 S**	1465	36		87.7	88.4	87.6	0.8	11.3	2.3	6.9	2.9	64	76	**1LE1001-1CB0■-■■■■**	42	0.027
7.5	**8.6**	**132 M**	1465	49		88.7	89.8	89.8	0.83	14.7	2.3	6.9	2.9	64	76	**1LE1001-1CB2■-■■■■**	49	0.034
11	**12.6**	**160 M**	1470	71		89.8	91	90.9	0.85	21	2.1	6.7	2.8	65	77	**1LE1001-1DB2■-■■■■**	71	0.065
15	**17.3**	**160 L**	1475	97		90.6	91.2	90.8	0.85	28	2.3	7.3	3	65	77	**1LE1001-1DB4■-■■■■**	83	0.083
18.5	**21.3**	**180 M**	1465	121		91.2	92	91.9	0.84	35	2.5	7.2	3.4	61	74	**1LE1001-1EB2■-■■■■**	128	0.12
22	**25.3**	**180 L**	1465	143		91.6	92.2	91.9	0.84	41.5	2.6	7.3	3.5	69	76	**1LE1001-1EB4■-■■■■**	132	0.13
30	**34.5**	**200 L**	1470	195		92.3	92.9	92.6	0.84	56	2.5	6.7	3.3	70	77	**1LE1001-2AB5■-■■■■**	173	0.2

Voltages		Version			Order code
50 Hz 230 VΔ/400 VY	60 Hz [1] 460 VY	**Standard**	2	2	–
50 Hz 400 VΔ/690 VY	60 Hz [1] 460 VΔ	**Standard**	3	4	–
50 Hz 500 VY		Without additional charge	2	7	–
50 Hz 500 VΔ		Without additional charge	4	0	–
For other voltages [1] and more information, see from page 2/85			9	0	. . .

Types of construction		Version		Order code
Without flange	IM B3 [3]	**Standard**	A	–
With flange	IM B5 [3]	With additional charge	F	–
With flange	IM B14 [3]	With additional charge	K	–
For other types of construction and more information, see from page 2/90			■	. . .

Motor protection	Version		Order code
Without	**Standard**	A	–
PTC thermistor with 1 or 3 temperature sensors (frame sizes 63 to 90 or 100 to 200)	With additional charge	B	–
For other motor protection and more information, see from page 2/98		■	. . .

Terminal box position	Version	
Terminal box at top	**Standard**	4
For other terminal box positions and more information, see from page 2/100		■

Special versions		Order code(s)
Forced-air cooled motors w/o ext. fan/fan cover (IC 418)	**1LE1001-. . . . ■-■■■■-Z**	**F90** +. . .+. . .+. . .
For options, see from page 2/102	**1LE1001-. . . . ■-■■■■-Z**	. . .+. . .+. . .+. . .

[1] Operating values at rated power for 60 Hz are stored in the Drive Technology Configurator (DT Configurator; see Appendix, "Tools and engineering").

[2] For converter operation of shaft heights 63 and 90, ordering with PTC thermistors and their connection to the converter is recommended.

[3] Types derived from IM B3 (IM B6/7/8, IM V6, and IM V5), from IM B5 (IM V3 and IM V1) and from IM B14 (IM V19 and IM V18) are possible, provided that no requirements exist for condensation drainage holes (**H03**) or stamping of the type on the rating plate. The basic type IM B3, IM B5 or IM B14 is stamped as standard on the rating plate. For orders with condensation drainage holes (**H03**), the type must be specified.

© Siemens AG 2018

2

Selection and ordering data (continued)

P_{rated}, 50 Hz/ P50	P_{rated}, 60 Hz/ P60 [1]	Frame size	Operating values at rated power: n_{rated}, 50 Hz	T_{rated}, 50 Hz	Different IE class 60 Hz/P60	η_{rated}, 50 Hz, 4/4	η_{rated}, 50 Hz, 3/4	η_{rated}, 50 Hz, 2/4	cos-φ_{rated}, 50 Hz, 4/4	I_{rated}, 50 Hz, 400 V	T_{LR}/T_{rated}, 50 Hz	I_{LR}/I_{rated}, 50 Hz	T_B/T_{rated}, 50 Hz	L_{pfA}, 50 Hz	L_{WA}, 50 Hz	Aluminum series 1LE1001 Article No.	$m_{IM\ B3}$	J
kW	kW	FS	rpm	Nm		%	%	%		A				dB(A)	dB(A)	▲ New	kg	kgm^2
• Cooling: Self-ventilated (IC 411) or with order code F90 forced-air cooled without external fan and fan cover (IC 418)																		
• Efficiency according to IEC 60034-30: IE2 High Efficiency, service factor (SF) 1.15																		
• Insulation: Thermal class 155 (temperature class F), IP55 degree of protection, utilization in accordance with thermal class 130 (temperature class B)																		
6-pole: 1000 rpm at 50 Hz, 1200 rpm at 60 Hz [1]																		
0.37	**0.43**	**80 M**	925	3.8		67.6	67.9	64.4	0.69	1.14	2.1	4	2.4	42	53	**1LE1001-0DC2■-■■■■**	9	0.0017
0.55	**0.63**	**80 M**	935	5.6		73.1	73.8	70.8	0.66	1.65	2.5	4.4	2.9	42	53	**1LE1001-0DC3■-■■■■**	12	0.0025
0.75	**0.86**	**90 S**	935	7.7		75.9	76.8	74.5	0.7	2.05	2	4.1	2.5	43	55	**1LE1001-0EC0■-■■■■**	13	0.003
1.1	**1.27**	**90 L**	935	11	IE1	78.1	79.3	77.7	0.7	2.9	2.2	4.4	2.6	43	55	**1LE1001-0EC4■-■■■■**	16	0.004
1.5	**1.75**	**100 L**	970	15		79.8	80.5	79	0.73	3.7	2	5.4	2.8	59	71	**1LE1001-1AC4■-■■■■**	25	0.011
2.2	**2.55**	**112 M**	965	22		81.8	82.7	81.7	0.75	5.2	2	5	2.8	62	74	**1LE1001-1BC2■-■■■■**	29	0.014
3	**3.45**	**132 S**	970	30		83.3	83.4	81	0.72	7.2	1.6	5	2.5	63	75	**1LE1001-1CC0■-■■■■**	38	0.024
4	**4.55**	**132 M**	970	39		84.6	85.5	84.3	0.75	9.1	1.6	5	2.3	63	75	**1LE1001-1CC2■-■■■■**	43	0.029
5.5	**6.3**	**132 M**	970	54		86	87.1	86.4	0.76	12.1	1.9	5.6	2.6	63	75	**1LE1001-1CC3■-■■■■**	52	0.037
7.5	**8.6**	**160 M**	975	73		87.2	87.9	87.2	0.74	16.8	1.9	4.7	2.2	67	79	**1LE1001-1DC2■-■■■■**	77	0.075
11	**12.6**	**160 L**	975	108		88.7	89.7	89.3	0.76	23.5	1.9	4.8	2.2	67	79	**1LE1001-1DC4■-■■■■**	93	0.098
15	**18**	**180 L**	975	147		89.7	90.1	89.5	0.78	31	2.5	6	3.1	57	70	**1LE1001-1EC4■-■■■■**	121	0.17
18.5	**22**	**200 L**	978	181	IE1	90.4	91.4	91.3	0.82	36	2.4	5.8	2.6	63	76	**1LE1001-2AC4■-■■■■**	151	0.25
22	**26.5**	**200 L**	978	215	IE1	90.9	91.7	91.4	0.82	42.5	2.5	6.2	2.6	63	76	**1LE1001-2AC5■-■■■■**	173	0.3

Voltages		Version					Order code
50 Hz 230 VΔ/400 VY	60 Hz [1] 460 VY	**Standard**	**2**	**2**			–
50 Hz 400 VΔ/690 VY	60 Hz [1] 460 VΔ	**Standard**	**3**	**4**			–
50 Hz 500 VY		Without additional charge	**2**	**7**			–
50 Hz 500 VΔ		Without additional charge	**4**	**0**			–
For other voltages [1] and more information, see from page 2/85			**9**	**0**			. . .
Types of construction		Version					Order code
Without flange	IM B3 [3]	**Standard**			**A**		–
With flange	IM B5 [3]	With additional charge			**F**		–
With flange	IM B14 [3]	With additional charge			**K**		–
For other types of construction and more information, see from page 2/90					■		. . .
Motor protection		Version					Order code
Without		**Standard**				**A**	–
PTC thermistor with 1 or 3 temperature sensors (frame sizes 80, 90 or 100 to 200)		With additional charge				**B**	–
For other motor protection and more information, see from page 2/98						■	. . .
Terminal box position		Version					
Terminal box at top		**Standard**					**4**
For other terminal box positions and more information, see from page 2/100							■
Special versions							Order code(s)
Forced-air cooled motors w/o ext. fan/fan cover (IC 418)		**1LE1001-. . . . ■-■■■■-Z**					**F90** +. . .+. . .+. . .
For options, see from page 2/102		**1LE1001-. . . . ■-■■■■-Z**					. . .+. . .+. . .+. . .

1) Operating values at rated power for 60 Hz are stored in the Drive Technology Configurator (DT Configurator; see Appendix, "Tools and engineering").

2) For converter operation of shaft heights 63 and 90, ordering with PTC thermistors and their connection to the converter is recommended.

3) Types derived from IM B3 (IM B6/7/8, IM V6, and IM V5), from IM B5 (IM V3 and IM V1) and from IM B14 (IM V19 and IM V18) are possible, provided that no requirements exist for condensation drainage holes (**H03**) or stamping of the type on the rating plate. The basic type IM B3, IM B5 or IM B14 is stamped as standard on the rating plate. For orders with condensation drainage holes (**H03**), the type must be specified.

© Siemens AG 2018

Please note minimum legal efficiencies in the European Economic Area!

IE2

Selection and ordering data (continued)

P_{rated}, 50 Hz/ P50	P_{rated}, 60 Hz/ P60 [1]	Frame size	Operating values at rated power: n_{rated}, 50 Hz	T_{rated}, 50 Hz	Different IE class 60 Hz/P60	η_{rated}, 50 Hz, 4/4	η_{rated}, 50 Hz, 3/4	η_{rated}, 50 Hz, 2/4	cos-φ_{rated}, 50 Hz, 4/4	I_{rated}, 50 Hz, 400 V	T_{LR}/T_{rated}, 50 Hz	I_{LR}/I_{rated}, 50 Hz	T_B/T_{rated}, 50 Hz	L_{pfA}, 50 Hz	L_{WA}, 50 Hz	Aluminum series 1LE1001 Article No.	$m_{IM\ B3}$	J
kW	kW	FS	rpm	Nm		%	%	%		A				dB(A)	dB(A)		kg	kgm^2
• Cooling: Self-ventilated (IC 411) or with order code F90 forced-air cooled without external fan and fan cover (IC 418) • Efficiency according to IEC 60034-30: IE2 High Efficiency, service factor (SF) 1.15 • Insulation: Thermal class 155 (temperature class F), IP55 degree of protection, utilization in accordance with thermal class 130 (temperature class B)																		
8-pole: 750 rpm at 50 Hz, 900 rpm at 60 Hz [1]																		
0.75	0.86	100 L	705	10		66.2	65.7	61.6	0.61	2.7	1.5	3.2	2.1	60	72	1LE1001-1AD4■-■■■■	21	0.0086
1.1	1.27	100 L	695	15		70.8	72.3	69.6	0.65	3.45	1.4	3.2	1.9	60	72	1LE1001-1AD5■-■■■■	25	0.011
1.5	1.75	112 M	725	20		74.1	73.9	71.2	0.63	4.65	1.6	4	2.4	63	75	1LE1001-1BD2■-■■■■	34	0.017
2.2	2.55	132 S	725	29		77.6	78.2	76.6	0.62	6.6	1.4	3.5	2	63	75	1LE1001-1CD0■-■■■■	46	0.034
3	3.45	132 M	720	40	IE1	80	80.7	79.2	0.62	8.7	1.4	3.7	2	63	75	1LE1001-1CD2■-■■■■	52	0.037
4	4.55	160 M	730	52		81.9	82.6	81.4	0.67	10.5	1.6	3.7	1.9	63	75	1LE1001-1DD2■-■■■■	69	0.065
5.5	6.3	160 M	730	72		83.8	84.2	83	0.67	14.1	1.7	3.9	2	63	75	1LE1001-1DD3■-■■■■	82	0.083
7.5	8.6	160 L	725	99		85.3	86.4	86	0.7	18.1	1.6	3.8	1.9	63	75	1LE1001-1DD4■-■■■■	94	0.098
11	13.2	180 L	720	146	IE1	86.9	88	87.6	0.7	26	2.3	4.9	2.6	72	80	1LE1001-1ED4■-■■■■	122	0.195
15	18	200 L	718	199		88	89.5	89.9	0.76	32.5	2.4	5.4	2.8	58	65	1LE1001-2AD5■-■■■■	172	0.344

Voltages		Version			Order code
50 Hz 230 VΔ/400 VY	60 Hz [1] 460 VY	**Standard**	2	2	–
50 Hz 400 VΔ/690 VY	60 Hz [1] 460 VΔ	**Standard**	3	4	–
50 Hz 500 VY		Without additional charge	2	7	–
50 Hz 500 VΔ		Without additional charge	4	0	–
For other voltages [1] and more information, see from page 2/85			9	0	. . .

Types of construction		Version		Order code
Without flange	IM B3 [2]	**Standard**	A	–
With flange	IM B5 [2]	With additional charge	F	–
With flange	IM B14 [2]	With additional charge	K	–
For other types of construction and more information, see from page 2/90			■	. . .

Motor protection	Version		Order code
Without	**Standard**	A	–
PTC thermistor with 3 temperature sensors	With additional charge	B	–
For other motor protection and more information, see from page 2/98		■	. . .

Terminal box position	Version	
Terminal box at top	**Standard**	4
For other terminal box positions and more information, see from page 2/100		■

Special versions		Order code(s)
Forced-air cooled motors w/o ext. fan/fan cover (IC 418)	1LE1001-. . . . ■-■■■■-Z	F90 +. . .+. . .+. . .
For options, see from page 2/102	1LE1001-. . . . ■-■■■■-Z	. . .+. . .+. . .+. . .

[1] Operating values at rated power for 60 Hz are stored in the Drive Technology Configurator (DT Configurator; see Appendix, "Tools and engineering").

[2] Types derived from IM B3 (IM B6/7/8, IM V6, and IM V5), from IM B5 (IM V3 and IM V1) and from IM B14 (IM V19 and IM V18) are possible, provided that no requirements exist for condensation drainage holes (**H03**) or stamping of the type on the rating plate. The basic type IM B3, IM B5 or IM B14 is stamped as standard on the rating plate. For orders with condensation drainage holes (**H03**), the type must be specified.

© Siemens AG 2018

2

Selection and ordering data

P_{rated}, 50 Hz/ P50	P_{rated}, 60 Hz/ P60 [1]	Frame size	Operating values at rated power: n_{rated}, 50 Hz	T_{rated}, 50 Hz	Different IE class 60 Hz/P60	η_{rated}, 50 Hz, 4/4	η_{rated}, 50 Hz, 3/4	η_{rated}, 50 Hz, 2/4	cos-φ_{rated}, 50 Hz, 4/4	I_{rated}, 50 Hz, 400 V	T_{LR}/T_{rated}, 50 Hz	I_{LR}/I_{rated}, 50 Hz	T_B/T_{rated}, 50 Hz	L_{pfA}, 50 Hz	L_{WA}, 50 Hz	Aluminum series 1LE1001 Article No.	$m_{IM\ B3}$	J
kW	kW	FS	rpm	Nm		%	%	%		A				dB(A)	dB(A)		kg	kgm²
• Cooling: Self-ventilated (IC 411) or with order code F90 forced-air cooled without external fan and fan cover (IC 418)																		
• Efficiency according to IEC 60034-30: IE2 High Efficiency, service factor (SF) 1.15																		
• Insulation: Thermal class 155 (temperature class F), IP55 degree of protection, utilization in accordance with thermal class 130 (temperature class B)																		
2-pole: 3000 rpm at 50 Hz, 3600 rpm at 60 Hz [1]																		
1.5	**1.75**	**80 M**	2830	5.1		81.3	83.4	83.6	0.85	3.15	2.6	6.1	2.8	60	71	**1LE1001-0DA6■-■■■■**	11	0.0013
3	**3.45**	**90 L**	2895	9.9		84.6	85.5	84.5	0.86	6	3.4	7.9	3.6	65	77	**1LE1001-0EA6■-■■■■**	15	0.0031
4	**4.55**	**100 L**	2905	13		85.8	86.9	86.5	0.86	7.8	2.5	7.6	3.5	67	79	**1LE1001-1AA6■-■■■■**	26	0.0054
5.5	**6.3**	**112 M**	2945	18		87	87.8	87.4	0.88	10.4	2.3	8.5	3.8	69	81	**1LE1001-1BA6■-■■■■**	34	0.012
11	**12.6**	**132 M**	2950	36		89.4	90.1	89.9	0.89	20	2.3	7.9	3.2	68	80	**1LE1001-1CA6■-■■■■**	57	0.031
22	**25.3**	**160 L**	2955	71		91.3	91.8	91.4	0.89	39	3.1	8.4	3.7	70	82	**1LE1001-1DA6■-■■■■**	94	0.068
30	**33.5**	**180 L**	2940	97		92	92.6	92.3	0.89	53	2.3	7.8	3.4	76	83	**1LE1001-1EA6■-■■■■**	139	0.094
45	**51**	**200 L**	2950	146		92.9	93.2	92.9	0.87	81	2.5	7.1	3.2	77	84	**1LE1001-2AA6■-■■■■**	194	0.176
4-pole: 1500 rpm at 50 Hz, 1800 rpm at 60 Hz [1]																		
1.1	**1.27**	**80 M**	1440	7.3		81.4	82.1	80.7	0.78	2.5	2.4	6.1	3	53	64	**1LE1001-0DB6■-■■■■**	11	0.0029
2.2	**2.55**	**90 L**	1425	15	IE1	84.3	85.6	85	0.81	4.65	2.8	6.1	3.1	56	68	**1LE1001-0EB6■-■■■■**	16	0.0049
4	**4.55**	**100 L**	1460	26		86.6	88	87.5	0.8	8.3	2.2	7.5	3.5	60	72	**1LE1001-1AB6■-■■■■**	30	0.014
5.5	**6.3**	**112 M**	1460	36		87.7	88.2	87.2	0.81	11.2	2.5	7.1	3.2	58	70	**1LE1001-1BB6■-■■■■**	34	0.017
11	**12.6**	**132 M**	1465	72		89.8	90.9	90.9	0.84	21	2.6	7.7	3.1	64	76	**1LE1001-1CB6■-■■■■**	64	0.046
18.5	**21.3**	**160 L**	1475	120		91.2	91.8	91.3	0.85	34.5	2.5	7.7	3.3	65	77	**1LE1001-1DB6■-■■■■**	100	0.099
30	**34.5**	**180 L**	1465	196		92.3	93	92.9	0.81	58	2.5	7.3	3.3	70	77	**1LE1001-1EB6■-■■■■**	148	0.159
37	**42.5**	**200 L**	1470	240		92.7	93.5	93.6	0.84	69	2.4	7	3	68	75	**1LE1001-2AB6■-■■■■**	189	0.246

Voltages		Version			Order code
50 Hz 230 VΔ/400 VY	60 Hz [1] 460 VY	**Standard**	2	2	–
50 Hz 400 VΔ/690 VY	60 Hz [1] 460 VΔ	**Standard**	3	4	–
50 Hz 500 VY		Without additional charge	2	7	–
50 Hz 500 VΔ		Without additional charge	4	0	–
For other voltages [1] and more information, see from page 2/85			9	0	. . .

Types of construction		Version		Order code
Without flange	IM B3 [2]	**Standard**	A	–
With flange	IM B5 [2]	With additional charge	F	–
With flange	IM B14 [2]	With additional charge	K	–
For other types of construction and more information, see from page 2/90			■	. . .

Motor protection	Version		Order code
Without	**Standard**	A	–
PTC thermistor with 1 or 3 temperature sensors (frame sizes 80, 90 or 100 to 200)	With additional charge	B	–
For other motor protection and more information, see from page 2/98		■	. . .

Terminal box position	Version		
Terminal box at top	**Standard**	4	
For other terminal box positions and more information, see from page 2/100		■	

Special versions		Order code(s)
For options, see from page 2/102	**1LE1001-. . . . ■-■■■■-Z**	. . .+. . .+. . .+. . .

[1] Operating values at rated power for 60 Hz are stored in the Drive Technology Configurator (DT Configurator; see Appendix, "Tools and engineering").

[2] Types derived from IM B3 (IM B6/7/8, IM V6, and IM V5), from IM B5 (IM V3 and IM V1) and from IM B14 (IM V19 and IM V18) are possible, provided that no requirements exist for condensation drainage holes (**H03**) or stamping of the type on the rating plate. The basic type IM B3, IM B5 or IM B14 is stamped as standard on the rating plate. For orders with condensation drainage holes (**H03**), the type must be specified.

© Siemens AG 2018

IE2

Selection and ordering data (continued)

P_{rated}, 50 Hz/ P50	P_{rated}, 60 Hz/ P60 [1]	Frame size	Operating values at rated power: n_{rated}, 50 Hz	T_{rated}, 50 Hz	Different IE class 60 Hz/P60	η_{rated}, 50 Hz, 4/4	η_{rated}, 50 Hz, 3/4	η_{rated}, 50 Hz, 2/4	cos-φ_{rated}, 50 Hz, 4/4	I_{rated}, 50 Hz, 400 V	T_{LR}/T_{rated}, 50 Hz	I_{LR}/I_{rated}, 50 Hz	T_B/T_{rated}, 50 Hz	L_{pfA}, 50 Hz	L_{WA}, 50 Hz	Aluminum series 1LE1001 Article No.	$m_{IM\ B3}$	J
kW	kW	FS	rpm	Nm		%	%	%		A				dB(A)	dB(A)		kg	kgm²
• Cooling: Self-ventilated (IC 411) or with order code F90 forced-air cooled without external fan and fan cover (IC 418) • Efficiency according to IEC 60034-30: IE2 High Efficiency, service factor (SF) 1.15 • Insulation: Thermal class 155 (temperature class F), IP55 degree of protection, utilization in accordance with thermal class 130 (temperature class B)																		
6-pole: 1000 rpm at 50 Hz, 1200 rpm at 60 Hz [1]																		
2.2	2.55	100 L	965	22	IE1	81.8	83.3	82.7	0.76	5.1	1.7	4.9	2.5	59	71	1LE1001-1AC6■-■■■■	30	0.014
3	3.45	112 M	965	30		83.3	84	82.7	0.74	7	2.1	5.4	2.7	62	74	1LE1001-1BC6■-■■■■	34	0.017
7.5	8.6	132 M	970	74		87.2	88.1	87.1	0.75	16.6	2	5.6	2.6	63	75	1LE1001-1CC6■-■■■■	64	0.046
15	17.3	160 L	975	147	IE1	89.7	90.4	89.7	0.75	32	2	5.2	2.4	67	79	1LE1001-1DC6■-■■■■	115	0.12
18.5	22	180 L	975	181		90.4	90.9	90.5	0.77	38.5	2.3	6	2.9	67	80	1LE1001-1EC6■-■■■■	130	0.206
30	34.5	200 L	975	294		91.7	92.5	92.4	0.77	61	2.6	6.3	2.7	68	75	1LE1001-2AC6■-■■■■	192	0.381
8-pole: 750 rpm at 50 Hz, 900 rpm at 60 Hz [1]																		
15	18	180 L	720	199	IE1	88	89.2	89	0.73	33.5	2.2	4.9	2.5	67	75	1LE1001-1ED6■-■■■■	151	0.263
18.5	22	200 L	720	245	IE1	88.6	89.9	90.2	0.78	38.5	2.6	5.8	3	65	72	1LE1001-2AD6■-■■■■	198	0.416

Voltages		Version					Order code
50 Hz 230 VΔ/400 VY	60 Hz [1] 460 VY	**Standard**	2	2			–
50 Hz 400 VΔ/690 VY	60 Hz [1] 460 VΔ	**Standard**	3	4			–
50 Hz 500 VY		Without additional charge	2	7			–
50 Hz 500 VΔ		Without additional charge	4	0			–
For other voltages [1] and more information, see from page 2/85			9	0			. . .
Types of construction		Version					Order code
Without flange	IM B3 [2]	**Standard**			A		–
With flange	IM B5 [2]	With additional charge			F		–
With flange	IM B14 [2]	With additional charge			K		–
For other types of construction and more information, see from page 2/90					■		. . .
Motor protection		Version					Order code
Without		**Standard**				A	–
PTC thermistor with 3 temperature sensors		With additional charge				B	–
For other motor protection and more information, see from page 2/98						■	. . .
Terminal box position		Version					
Terminal box at top		**Standard**				4	
For other terminal box positions and more information, see from page 2/100						■	
Special versions							Order code(s)
For options, see from page 2/102		1LE1001-. . . . ■-■■■■-Z					. . .+. . .+. . .+. . .

[1] Operating values at rated power for 60 Hz are stored in the Drive Technology Configurator (DT Configurator; see Appendix, "Tools and engineering").

[2] Types derived from IM B3 (IM B6/7/8, IM V6, and IM V5), from IM B5 (IM V3 and IM V1) and from IM B14 (IM V19 and IM V18) are possible, provided that no requirements exist for condensation drainage holes (**H03**) or stamping of the type on the rating plate. The basic type IM B3, IM B5 or IM B14 is stamped as standard on the rating plate. For orders with condensation drainage holes (**H03**), the type must be specified.

© Siemens AG 2018

2

Selection and ordering data

P_{rated}, 50 Hz/ P50	P_{rated}, 60 Hz/ P60 [1]	Frame size	Operating values at rated power: n_{ra-ted}, 50 Hz	T_{ra-ted}, 50 Hz	η_{ra-ted}, 50 Hz, 4/4	η_{ra-ted}, 50 Hz, 3/4	η_{ra-ted}, 50 Hz, 2/4	cos-φ_{rated}, 50 Hz, 4/4	I_{ra-ted}, 50 Hz, 400 V	T_{LR}/T_{ra-ted}, 50 Hz	I_{LR}/I_{ra-ted}, 50 Hz	T_B/T_{ra-ted}, 50 Hz	L_{pfA}, 50 Hz	L_{WA}, 50 Hz	Cast-iron series 1LE1501 – *Basic Line* Article No.	$m_{IM\ B3}$	J
kW	kW	FS	rpm	Nm	%	%	%		A				dB(A)	dB(A)		kg	kgm²
• Cooling: Self-ventilated (IC 411) or with order code F90 forced-air cooled without external fan and fan cover (IC 418) • Efficiency according to IEC 60034-30: IE2 High Efficiency, service factor (SF) 1.15 • Insulation: Thermal class 155 (temperature class F), IP55 degree of protection, utilization in accordance with thermal class 130 (temperature class B)																	
2-pole: 3000 rpm at 50 Hz, 3600 rpm at 60 Hz [1]																	
0.37	**0.43**	**71 M**	2770	1.3	69.5	70.5	67.9	0.81	0.95	2.5	4.1	2.5	58	69	**1LE1501-0CA2■-■■■■**	11	0.00035
0.55	**0.63**	**71 M**	2780	1.9	74.1	75.2	72.9	0.8	1.34	2.6	4.6	2.6	58	69	**1LE1501-0CA3■-■■■■**	13	0.00045
0.75	**0.86**	**80 M**	2805	2.6	77.4	80	80.1	0.84	1.67	1.9	4.9	2.3	60	71	**1LE1501-0DA2■-■■■■**	16	0.0008
1.1	**1.27**	**80 M**	2835	3.7	79.6	81.3	80.9	0.83	2.4	2.7	6	3.1	60	71	**1LE1501-0DA3■-■■■■**	18	0.0011
1.5	**1.75**	**90 S**	2885	4.9	81.3	81.7	79.8	0.84	3.15	2.7	6.9	3.6	65	77	**1LE1501-0EA0■-■■■■**	23	0.0017
2.2	**2.55**	**90 L**	2890	7.3	83.2	83.7	82	0.85	4.5	2.5	7.1	3.7	65	77	**1LE1501-0EA4■-■■■■**	25	0.0021
3	**3.45**	**100 L**	2905	9.9	84.6	85.5	84.6	0.84	6.1	2.3	7	3.3	67	79	**1LE1501-1AA4■-■■■■**	32	0.0044
4	**4.55**	**112 M**	2945	13	85.8	86.2	85.1	0.85	7.9	2.1	8	3.6	69	81	**1LE1501-1BA2■-■■■■**	39	0.0092
5.5	**6.3**	**132 S**	2950	18	87	88	87.6	0.87	10.5	1.8	6.6	2.9	68	80	**1LE1501-1CA0■-■■■■**	57	0.02
7.5	**8.6**	**132 S**	2950	24	88.1	88.5	87.6	0.87	14.1	2.2	7.5	3.1	68	80	**1LE1501-1CA1■-■■■■**	61	0.024
11	**12.6**	**160 M**	2955	36	89.4	89.3	88	0.87	20.5	2.1	7.4	3.2	70	82	**1LE1501-1DA2■-■■■■**	96	0.045
15	**17.3**	**160 M**	2955	48	90.3	90.7	90	0.88	27	2.4	7.6	3.4	70	82	**1LE1501-1DA3■-■■■■**	104	0.053
18.5	**21.3**	**160 L**	2955	60	90.9	91.3	90.6	0.88	33.5	2.9	7.9	3.6	70	82	**1LE1501-1DA4■-■■■■**	113	0.061
22	**24.5**	**180 M**	2940	71	91.3	91.8	91.3	0.87	40	2.7	7.4	3.6	77	84	**1LE1501-1EA2■-■■■■**	145	0.069
30	**33.5**	**200 L**	2960	97	92	92.3	91.8	0.87	54	2.5	6.9	3.3	78	85	**1LE1501-2AA4■-■■■■**	200	0.13
37	**41.5**	**200 L**	2960	119	92.5	93	92.7	0.88	66	2.7	7.4	3.5	78	85	**1LE1501-2AA5■-■■■■**	225	0.15
45	**51**	**225 M**	2965	145	92.9	93.1	92.5	0.88	79	2.7	7.8	3.7	76	89	**1LE1501-2BA2■-■■■■**	295	0.23
55	**62**	**250 M**	2970	177	93.2	93.3	92.4	0.88	97	2.3	6.8	3.1	76	89	**1LE1501-2CA2■-■■■■**	360	0.4
75	**84**	**280 S**	2978	240	93.8	93.6	92.4	0.86	134	2.5	7.2	3.2	76	89	**1LE1501-2DA0■-■■■■**	490	0.71
90	**101**	**280 M**	2975	289	94.1	94.2	93.5	0.88	157	2.5	7.1	3.1	76	89	**1LE1501-2DA2■-■■■■**	530	0.83
110	**123**	**315 S**	2982	352	94.3	94.2	93.3	0.9	187	2.4	7.3	3	77	91	**1LE1501-3AA0■-■■■■**	720	1.3
132	**148**	**315 M**	2982	423	94.6	94.7	94.1	0.91	220	2.4	7.2	3.1	77	91	**1LE1501-3AA2■-■■■■**	880	1.6
160	**180**	**315 L**	2982	512	94.8	94.9	94.3	0.92	265	2.3	7	3.1	80	95	**1LE1501-3AA4■-■■■■**	930	1.8
200	**224**	**315 L**	2982	640	95	95.2	94.8	0.92	330	2.5	7.3	3	80	95	**1LE1501-3AA5■-■■■■**	1130	2.2

Voltages [2]		Version					Order code
50 Hz 230 VΔ/400 VY	60 Hz [1] 460 VY	**Standard**	2	2			–
50 Hz 400 VΔ/690 VY	60 Hz [1] 460 VΔ	**Standard**	3	4			–
50 Hz 500 VY		Without additional charge	2	7			–
50 Hz 500 VΔ		Without additional charge	4	0			–
For other voltages [1] and more information, see from page 2/88			9	0			. . .
Types of construction		Version					Order code
Without flange	IM B3 [3]	**Standard**			A		–
With flange	IM B5 [3]	With additional charge			F		–
With flange	IM B14 [3]	With additional charge			K		–
For other types of construction and more information, see from page 2/94					■		. . .
Motor protection		Version					Order code
Without		**Standard**				A	–
PTC thermistor with 3 temperature sensors		With additional charge				B	–
For other motor protection and more information, see from page 2/99						■	. . .
Terminal box position		Version					
Terminal box at top		**Standard**					4
For other terminal box positions and more information, see from page 2/101							■
Special versions							Order code(s)
Forced-air cooled motors w/o ext. fan/fan cover (IC 418)		**1LE1501-. . . . ■-■■■■**					**-Z F90+. . .+. . .+. . .**
For options, see from page 2/109		**1LE1501-. . . . ■-■■■■**					**-Z . . .+. . .+. . .+. . .**

1) Operating values at rated power for 60 Hz are stored in the Drive Technology Configurator (DT Configurator; see Appendix, "Tools and engineering").

2) Parallel supply lines are required in the case of connection to ≤ 240 V. For frame size 315 with connection to ≤ 240 V, due to the high current, a drilled, removable entry plate (order code **R52**) or a larger terminal box (order code **R50**) can be used. Order codes **R52** and **R50** alter the motor dimensions.

3) Types derived from IM B3 (IM B6/7/8, IM V6 and IM V5), from IM B5 (IM V3 and IM V1) and from IM B14 (IM V19 and IM V18) are possible, provided that no requirement exists for stamping of the type on the rating plate. The basic type IM B3, IM B5 or IM B14 is stamped as standard on the rating plate. If mounted in a different position, the position must be specified to ensure that the condensation drainage holes are positioned correctly.

© Siemens AG 2018

Please note minimum legal efficiencies in the European Economic Area!

IE2

Selection and ordering data (continued)

P_{rated}, 50 Hz/ P50	P_{rated}, 60 Hz/ P60 [1]	Frame size	Operating values at rated power: n_{rated}, 50 Hz	T_{rated}, 50 Hz	η_{rated}, 50 Hz, 4/4	η_{rated}, 50 Hz, 3/4	η_{rated}, 50 Hz, 2/4	cos-φ_{rated}, 50 Hz, 4/4	I_{rated}, 50 Hz, 400 V	T_{LR}/T_{rated}, 50 Hz	I_{LR}/I_{rated}, 50 Hz	T_B/T_{rated}, 50 Hz	L_{pfA}, 50 Hz	L_{WA}, 50 Hz	Cast-iron series 1LE1501 – *Basic Line* Article No.	$m_{IM\ B3}$	J
kW	kW	FS	rpm	Nm	%	%	%		A				dB(A)	dB(A)		kg	kgm²
• Cooling: Self-ventilated (IC 411) or with order code F90 forced-air cooled without external fan and fan cover (IC 418) • Efficiency according to IEC 60034-30: IE2 High Efficiency, service factor (SF) 1.15 • Insulation: Thermal class 155 (temperature class F), IP55 degree of protection, utilization in accordance with thermal class 130 (temperature class B)																	
4-pole: 1500 rpm at 50 Hz, 1800 rpm at 60 Hz [1]																	
0.25	0.29	71 M	1395	1.7	68.5	68.4	64.2	0.69	0.76	2.4	3.7	2.5	50	61	1LE1501-0CB2■-■■■■	12	0.00076
0.37	0.43	71 M	1380	2.6	72.7	73.2	69.9	0.72	1.02	2.3	3.8	2.4	50	61	1LE1501-0CB3■-■■■■	13	0.00095
0.55	0.63	80 M	1440	3.6	77.1	76.8	73.7	0.74	1.39	2.2	5.3	3.1	53	64	1LE1501-0DB2■-■■■■	17	0.0017
0.75	0.86	80 M	1440	5	79.6	79.9	77.5	0.76	1.79	2.2	5.6	3.1	53	64	1LE1501-0DB3■-■■■■	18	0.0021
1.1	1.27	90 S	1425	7.4	81.4	81.8	80	0.78	2.5	2.3	5.6	2.9	56	68	1LE1501-0EB0■-■■■■	23	0.0028
1.5	1.75	90 L	1435	10	82.8	83.5	82.2	0.79	3.3	2.6	6.4	3.4	56	68	1LE1501-0EB4■-■■■■	25	0.0036
2.2	2.55	100 L	1455	14	84.3	85.1	84.2	0.81	4.65	2.1	6.9	3.3	60	72	1LE1501-1AB4■-■■■■	32	0.0086
3	3.45	100 L	1455	20	85.5	86.4	85.6	0.82	6.2	2	6.9	3.1	60	72	1LE1501-1AB5■-■■■■	37	0.011
4	4.55	112 M	1460	26	86.6	87.3	86.4	0.81	8.2	2.5	7.1	3.2	58	70	1LE1501-1BB2■-■■■■	46	0.014
5.5	6.3	132 S	1465	36	87.7	88.4	87.6	0.8	11.3	2.3	6.9	2.9	64	76	1LE1501-1CB0■-■■■■	61	0.027
7.5	8.6	132 M	1465	49	88.7	89.8	89.8	0.83	14.7	2.3	6.9	2.9	64	76	1LE1501-1CB2■-■■■■	75	0.034
11	12.6	160 M	1470	71	89.8	91	90.9	0.85	21	2.1	6.7	2.8	65	77	1LE1501-1DB2■-■■■■	96	0.065
15	17.3	160 L	1475	97	90.6	91.2	90.8	0.85	28	2.3	7.3	3	65	77	1LE1501-1DB4■-■■■■	104	0.083
18.5	21.3	180 M	1465	121	91.2	92	91.9	0.84	35	2.5	7.2	3.4	61	74	1LE1501-1EB2■-■■■■	160	0.12
22	25.3	180 L	1465	143	91.6	92.2	91.9	0.84	41.5	2.6	7.3	3.5	69	76	1LE1501-1EB4■-■■■■	170	0.13
30	34.5	200 L	1470	195	92.3	92.9	92.6	0.84	56	2.5	6.7	3.3	70	77	1LE1501-2AB5■-■■■■	230	0.2
37	42.5	225 S	1470	240	92.7	93.5	93.5	0.88	65	2.3	6.6	2.9	66	79	1LE1501-2BB0■-■■■■	280	0.42
45	52	225 M	1475	291	93.1	93.8	93.7	0.87	80	2.5	6.9	3.1	66	79	1LE1501-2BB2■-■■■■	305	0.46
55	63	250 M	1480	355	93.5	93.9	93.5	0.85	100	2.7	6.8	3	66	79	1LE1501-2CB2■-■■■■	385	0.75
75	86	280 S	1485	482	94	94.2	93.8	0.87	132	2.5	6.8	3	71	85	1LE1501-2DB0■-■■■■	550	1.3
90	104	280 M	1486	578	94.2	94.3	93.6	0.87	159	2.6	7.3	3.1	71	85	1LE1501-2DB2■-■■■■	570	1.4
110	127	315 S	1490	705	94.5	94.6	94	0.86	195	2.7	7.4	3	72	86	1LE1501-3AB0■-■■■■	740	2
132	152	315 M	1490	846	94.7	94.9	94.6	0.87	230	2.7	7.1	2.9	75	89	1LE1501-3AB2■-■■■■	870	2.3
160	184	315 L	1490	1025	94.9	95	94.5	0.87	280	2.8	7.2	3.1	76	91	1LE1501-3AB4■-■■■■	940	2.8
200	230	315 L	1490	1282	95.1	95.3	94.7	0.87	350	3.1	7.5	3.2	77	92	1LE1501-3AB5■-■■■■	1140	3.5

Voltages [2]		Version					Order code
50 Hz 230 VΔ/400 VY	60 Hz [1] 460 VY	**Standard**	2	2			–
50 Hz 400 VΔ/690 VY	60 Hz [1] 460 VΔ	**Standard**	3	4			–
50 Hz 500 VY		Without additional charge	2	7			–
50 Hz 500 VΔ		Without additional charge	4	0			–
For other voltages [1] and more information, see from page 2/88			9	0			. . .
Types of construction		Version					Order code
Without flange	IM B3 [3]	**Standard**			A		–
With flange	IM B5 [3]	With additional charge			F		–
With flange	IM B14 [3]	With additional charge			K		–
For other types of construction and more information, see from page 2/94					■		. . .
Motor protection		Version					Order code
Without		**Standard**				A	–
PTC thermistor with 3 temperature sensors		With additional charge				B	–
For other motor protection and more information, see from page 2/99						■	. . .
Terminal box position		Version					
Terminal box at top		**Standard**					4
For other terminal box positions and more information, see from page 2/101							■
Special versions							Order code(s)
Forced-air cooled motors w/o ext. fan/fan cover (IC 418)		1LE1501-. . . . ■-■■■■-Z					F90+. . .+. . .+. . .
For options, see from page 2/109		1LE1501-. . . . ■-■■■■-Z					. . .+. . .+. . .+. . .

[1] Operating values at rated power for 60 Hz are stored in the Drive Technology Configurator (DT Configurator; see Appendix, "Tools and engineering").

[2] Parallel supply lines are required in the case of connection to ≤ 240 V. For frame size 315 with connection to ≤ 240 V, due to the high current, a drilled, removable entry plate (order code **R52**) or a larger terminal box (order code **R50**) can be used. Order codes **R52** and **R50** alter the motor dimensions.

[3] Types derived from IM B3 (IM B6/7/8, IM V6 and IM V5), from IM B5 (IM V3 and IM V1) and from IM B14 (IM V19 and IM V18) are possible, provided that no requirement exists for stamping of the type on the rating plate. The basic type IM B3, IM B5 or IM B14 is stamped as standard on the rating plate. If mounted in a different position, the position must be specified to ensure that the condensation drainage holes are positioned correctly.

© Siemens AG 2018

Selection and ordering data (continued)

P_{rated}, 50 Hz/ P50	P_{rated}, 60 Hz/ P60 [1]	Frame size	Operating values at rated power: n_{rated}, 50 Hz	T_{rated}, 50 Hz	Different IE class 60 Hz/P60	η_{rated}, 50 Hz, 4/4	η_{rated}, 50 Hz, 3/4	η_{rated}, 50 Hz, 2/4	cos-φ_{rated}, 50 Hz, 4/4	I_{rated}, 50 Hz, 400 V	T_{LR}/T_{rated}, 50 Hz	I_{LR}/I_{rated}, 50 Hz	T_B/T_{rated}, 50 Hz	L_{pfA}, 50 Hz	L_{WA}, 50 Hz	Cast-iron series 1LE1501 – *Basic Line* Article No.	$m_{IM\ B3}$	J
kW	kW	FS	rpm	Nm		%	%	%		A				dB(A)	dB(A)		kg	kgm^2
• Cooling: Self-ventilated (IC 411) or with order code F90 forced-air cooled without external fan and fan cover (IC 418)																		
• Efficiency according to IEC 60034-30: IE2 High Efficiency, service factor (SF) 1.15																		
• Insulation: Thermal class 155 (temperature class F), IP55 degree of protection, utilization in accordance with thermal class 130 (temperature class B)																		
6-pole: 1000 rpm at 50 Hz, 1200 rpm at 60 Hz [1]																		
0.18	**0.21**	**71 M**	875	2		56.6	56.9	52.7	0.68	0.68	2.2	2.5	2.3	46	57	**1LE1501-0CC2■-■■■■**	12	0.0008
0.25	**0.29**	**71 M**	870	2.7		61.6	62.7	59.2	0.7	0.84	2.3	2.6	2.3	46	57	**1LE1501-0CC3■-■■■■**	13	0.001
0.37	**0.43**	**80 M**	925	3.8		67.6	67.9	64.4	0.69	1.14	2.1	4	2.4	42	53	**1LE1501-0DC2■-■■■■**	17	0.0017
0.55	**0.63**	**80 M**	935	5.6		73.1	73.8	70.8	0.66	1.65	2.5	4.4	2.9	42	53	**1LE1501-0DC3■-■■■■**	19	0.0025
0.75	**0.86**	**90 S**	935	7.7		75.9	76.8	74.5	0.7	2.05	2	4.1	2.5	43	55	**1LE1501-0EC0■-■■■■**	23	0.003
1.1	**1.27**	**90 L**	935	11	IE1	78.1	79.3	77.7	0.7	2.9	2.2	4.4	2.6	43	55	**1LE1501-0EC4■-■■■■**	26	0.004
1.5	**1.75**	**100 L**	970	15		79.8	80.5	79	0.73	3.7	2	5.4	2.8	59	71	**1LE1501-1AC4■-■■■■**	36	0.011
2.2	**2.55**	**112 M**	965	22		81.8	82.7	81.7	0.75	5.2	2	5	2.8	62	74	**1LE1501-1BC2■-■■■■**	41	0.014
3	**3.45**	**132 S**	970	30		83.3	83.4	81	0.72	7.2	1.6	5	2.5	63	75	**1LE1501-1CC0■-■■■■**	56	0.024
4	**4.55**	**132 M**	970	39		84.6	85.5	84.3	0.75	9.1	1.6	5	2.3	63	75	**1LE1501-1CC2■-■■■■**	61	0.029
5.5	**6.3**	**132 M**	970	54		86	87.1	86.4	0.76	12.1	1.9	5.6	2.6	63	75	**1LE1501-1CC3■-■■■■**	70	0.037
7.5	**8.6**	**160 M**	975	73		87.2	87.9	87.2	0.74	16.8	1.9	4.7	2.2	67	79	**1LE1501-1DC2■-■■■■**	106	0.075
11	**12.6**	**160 L**	975	108		88.7	89.7	89.3	0.76	23.5	1.9	4.8	2.2	67	79	**1LE1501-1DC4■-■■■■**	122	0.098
15	**18**	**180 L**	975	147		89.7	90.1	89.5	0.78	31	2.5	6	3.1	57	70	**1LE1501-1EC4■-■■■■**	155	0.17
18.5	**22**	**200 L**	978	181	IE1	90.4	91.4	91.3	0.82	36	2.4	5.8	2.6	63	76	**1LE1501-2AC4■-■■■■**	200	0.25
22	**26.5**	**200 L**	978	215	IE1	90.9	91.7	91.4	0.82	42.5	2.5	6.2	2.6	63	76	**1LE1501-2AC5■-■■■■**	220	0.3
30	**36**	**225 M**	980	292	IE1	91.7	92.5	92.3	0.83	57	2.5	5.6	2.7	65	78	**1LE1501-2BC2■-■■■■**	300	0.58
37	**44.5**	**250 M**	982	360	IE1	92.2	93.1	93.1	0.83	70	2.8	6	2.5	62	77	**1LE1501-2CC2■-■■■■**	370	0.86
45	**54**	**280 S**	985	436	IE1	92.7	93.4	93.2	0.84	83	2.7	6.3	2.6	65	79	**1LE1501-2DC0■-■■■■**	460	1.1
55	**66**	**280 M**	985	533	IE1	93.1	93.9	94	0.86	99	2.5	6.4	2.6	65	79	**1LE1501-2DC2■-■■■■**	510	1.4
75	**90**	**315 S**	988	725	IE1	93.7	94	93.6	0.84	138	2.5	6.7	2.8	65	79	**1LE1501-3AC0■-■■■■**	660	2.1
90	**108**	**315 M**	988	870	IE1	94	94.3	93.6	0.84	165	2.6	6.9	2.8	65	79	**1LE1501-3AC2■-■■■■**	730	2.5
110	**132**	**315 L**	988	1063	IE1	94.3	94.6	94.5	0.86	196	2.7	7	2.8	68	82	**1LE1501-3AC4■-■■■■**	940	3.6
132	**158**	**315 L**	988	1276		94.6	94.9	94.7	0.86	235	3	7.5	2.9	69	84	**1LE1501-3AC5■-■■■■**	990	4
160	**192**	**315 L**	988	1546		94.8	94.7	94.4	0.86	285	3.1	7.7	3.3	69	84	**1LE1501-3AC6■-■■■■**	1160	4.7

Voltages [2]		Version				Order code
50 Hz 230 VΔ/400 VY	60 Hz [1] 460 VY	**Standard**	2	2		–
50 Hz 400 VΔ/690 VY	60 Hz [1] 460 VΔ	**Standard**	3	4		–
50 Hz 500 VY		Without additional charge	2	7		–
50 Hz 500 VΔ		Without additional charge	4	0		–
For other voltages [1] and more information, see from page 2/88			9	0		. . .
Types of construction		Version				Order code
Without flange	IM B3 [3]	**Standard**			A	–
With flange	IM B5 [3]	With additional charge			F	–
With flange	IM B14 [3]	With additional charge			K	–
For other types of construction and more information, see from page 2/94					■	. . .
Motor protection		Version				Order code
Without		**Standard**			A	–
PTC thermistor with 3 temperature sensors		With additional charge			B	–
For other motor protection and more information, see from page 2/99					■	. . .
Terminal box position		Version				
Terminal box at top		**Standard**			4	
For other terminal box positions and more information, see from page 2/101					■	
Special versions						Order code(s)
Forced-air cooled motors w/o ext. fan/fan cover (IC 418)			**1LE1501-. . . . ■-■■■■-Z**			**F90+. . .+. . .+. . .**
For options, see from page 2/109			**1LE1501-. . . . ■-■■■■-Z**			**. . .+. . .+. . .+. . .**

1) Operating values at rated power for 60 Hz are stored in the Drive Technology Configurator (DT Configurator; see Appendix, "Tools and engineering").

2) Parallel supply lines are required in the case of connection to ≤ 240 V. For frame size 315 with connection to ≤ 240 V, due to the high current, a drilled, removable entry plate (order code **R52**) or a larger terminal box (order code **R50**) can be used. Order codes **R52** and **R50** alter the motor dimensions.

3) Types derived from IM B3 (IM B6/7/8, IM V6 and IM V5), from IM B5 (IM V3 and IM V1) and from IM B14 (IM V19 and IM V18) are possible, provided that no requirement exists for stamping of the type on the rating plate. The basic type IM B3, IM B5 or IM B14 is stamped as standard on the rating plate. If mounted in a different position, the position must be specified to ensure that the condensation drainage holes are positioned correctly.

© Siemens AG 2018

Please note minimum legal efficiencies in the European Economic Area!

IE2

Selection and ordering data (continued)

P_{rated}, 50 Hz/ P50	P_{rated}, 60 Hz/ P60 [1]	Frame size	Operating values at rated power: n_{rated}, 50 Hz	T_{rated}, 50 Hz	Different IE class 60 Hz/P60	η_{rated}, 50 Hz, 4/4	η_{rated}, 50 Hz, 3/4	η_{rated}, 50 Hz, 2/4	cos-φ_{rated}, 50 Hz, 4/4	I_{rated}, 50 Hz, 400 V	T_{LR}/T_{rated}, 50 Hz	I_{LR}/I_{rated}, 50 Hz	T_B/T_{rated}, 50 Hz	L_{pfA}, 50 Hz	L_{WA}, 50 Hz	Cast-iron series 1LE1501 – *Basic Line* Article No.	$m_{IM\ B3}$	J
kW	kW	FS	rpm	Nm		%	%	%		A				dB(A)	dB(A)		kg	kgm²
• Cooling: Self-ventilated (IC 411) or with order code F90 forced-air cooled without external fan and fan cover (IC 418)																		
• Efficiency according to IEC 60034-30: IE2 High Efficiency, service factor (SF) 1.15																		
• Insulation: Thermal class 155 (temperature class F), IP55 degree of protection, utilization in accordance with thermal class 130 (temperature class B)																		
8-pole: 750 rpm at 50 Hz, 900 rpm at 60 Hz [1]																		
0.09	**0.11**	**71 M**	630	1.4	[4]	40.1	40.6	35.8	0.67	0.5	1.7	1.6	1.7	59	63	**1LE1501-0CD2■-■■■■**	12	0.00077
0.12	**0.14**	**71 M**	640	1.8		40.1	39.6	34.7	0.66	0.65	1.8	1.8	1.8	48	59	**1LE1501-0CD3■-■■■■**	13	0.00100
0.18	**0.21**	**80 M**	690	2.5		45.9	43.6	37.8	0.6	0.93	1.7	2.2	2.1	51	62	**1LE1501-0DD2■-■■■■**	17	0.00175
0.25	**0.29**	**80 M**	705	3.4		50.6	48.1	41.9	0.55	1.3	2	2.5	2.5	51	62	**1LE1501-0DD3■-■■■■**	19	0.00246
0.37	**0.43**	**90 S**	675	5.2		56.1	55.6	49.6	0.71	1.34	1.4	2.6	1.7	53	65	**1LE1501-0ED0■-■■■■**	23	0.00225
0.55	**0.63**	**90 L**	665	7.9		61.7	63.4	59.8	0.74	1.74	1.5	2.7	1.7	53	65	**1LE1501-0ED4■-■■■■**	26	0.00305
0.75	**0.86**	**100 L**	705	10		66.2	65.7	61.6	0.61	2.7	1.5	3.2	2.1	60	72	**1LE1501-1AD4■-■■■■**	32	0.0086
1.1	**1.27**	**100 L**	695	15		70.8	72.3	69.6	0.65	3.45	1.4	3.2	1.9	60	72	**1LE1501-1AD5■-■■■■**	36	0.011
1.5	**1.75**	**112 M**	725	20		74.1	73.9	71.2	0.63	4.65	1.6	4	2.4	63	75	**1LE1501-1BD2■-■■■■**	53	0.017
2.2	**2.55**	**132 S**	725	29		77.6	78.2	76.6	0.62	6.6	1.4	3.5	2	63	75	**1LE1501-1CD0■-■■■■**	64	0.034
3	**3.45**	**132 M**	720	40	IE1	80	80.7	79.2	0.62	8.7	1.4	3.7	2	63	75	**1LE1501-1CD2■-■■■■**	67	0.037
4	**4.55**	**160 M**	730	52		81.9	82.6	81.4	0.67	10.5	1.6	3.7	1.9	63	75	**1LE1501-1DD2■-■■■■**	98	0.065
5.5	**6.3**	**160 M**	730	72		83.8	84.2	83	0.67	14.1	1.7	3.9	2	63	75	**1LE1501-1DD3■-■■■■**	111	0.083
7.5	**8.6**	**160 L**	725	99		85.3	86.4	86	0.7	18.1	1.6	3.8	1.9	63	75	**1LE1501-1DD4■-■■■■**	123	0.098
11	**13.2**	**180 L**	720	146	IE1	86.9	88	87.6	0.7	26	2.3	4.9	2.6	72	80	**1LE1501-1ED4■-■■■■**	155	0.195
15	**18**	**200 L**	718	199		88	89.5	89.9	0.76	32.5	2.4	5.4	2.8	58	65	**1LE1501-2AD5■-■■■■**	220	0.344
18.5	**22**	**225 S**	730	242	IE1	89	89.9	89.5	0.78	38.5	2.2	5.4	2.7	59	72	**1LE1501-2BD0■-■■■■**	250	0.43
22	**26.5**	**225 M**	730	288		90.3	91.3	91.1	0.8	44	2.3	5.5	2.7	58	71	**1LE1501-2BD2■-■■■■**	270	0.5
30	**36**	**250 M**	732	391		91.3	92.2	92	0.8	59	2.4	5.6	2.7	60	73	**1LE1501-2CD2■-■■■■**	370	0.86
37	**44.5**	**280 S**	736	480		91.9	92.5	92.1	0.78	75	2.3	5.4	2.4	63	77	**1LE1501-2DD0■-■■■■**	460	1.1
45	**54**	**280 M**	738	582		92.4	92.8	92.4	0.79	89	2.5	5.7	2.5	66	80	**1LE1501-2DD2■-■■■■**	510	1.4
55	**66**	**315 S**	740	710		92.9	93.3	92.9	0.8	107	2.2	5.8	2.6	69	83	**1LE1501-3AD0■-■■■■**	640	2
75	**90**	**315 M**	738	970		93.5	94.4	94.5	0.81	143	2.3	5.9	2.7	69	84	**1LE1501-3AD2■-■■■■**	720	2.5
90	**108**	**315 L**	740	1161		93.5	94.3	94.4	0.83	167	2.2	5.8	2.5	69	84	**1LE1501-3AD4■-■■■■**	860	3.1
110	**132**	**315 L**	740	1419		94.2	95	95.1	0.82	205	2.7	6.7	2.9	74	88	**1LE1501-3AD5■-■■■■**	980	3.9

Voltages [2]		Version			Order code
50 Hz 230 VΔ/400 VY	60 Hz [1] 460 VY	**Standard**	**2**	**2**	–
50 Hz 400 VΔ/690 VY	60 Hz [1] 460 VΔ	**Standard**	**3**	**4**	–
50 Hz 500 VY		Without additional charge	**2**	**7**	–
50 Hz 500 VΔ		Without additional charge	**4**	**0**	–
For other voltages [1] and more information, see from page 2/88			**9**	**0**	. . .

Types of construction		Version		Order code
Without flange	IM B3 [3]	**Standard**	**A**	–
With flange	IM B5 [3]	With additional charge	**F**	–
With flange	IM B14 [3]	With additional charge	**K**	–
For other types of construction and more information, see from page 2/94			■	. . .

Motor protection	Version		Order code
Without	**Standard**	**A**	–
PTC thermistor with 3 temperature sensors	With additional charge	**B**	–
For other motor protection and more information, see from page 2/99		■	. . .

Terminal box position	Version		
Terminal box at top	**Standard**	**4**	
For other terminal box positions and more information, see from page 2/101		■	

Special versions		Order code(s)
Forced-air cooled motors w/o ext. fan/fan cover (IC 418)	**1LE1501-. . . . ■-■■■■-Z**	**F90+. . .+. . .+. . .**
For options, see from page 2/109	**1LE1501-. . . . ■-■■■■-Z**	. . .+. . .+. . .+. . .

1) Operating values at rated power for 60 Hz are stored in the Drive Technology Configurator (DT Configurator; see Appendix, "Tools and engineering").

2) Parallel supply lines are required in the case of connection to ≤ 240 V. For frame size 315 with connection to ≤ 240 V, due to the high current, a drilled, removable entry plate (order code **R52**) or a larger terminal box (order code **R50**) can be used. Order codes **R52** and **R50** alter the motor dimensions.

3) Types derived from IM B3 (IM B6/7/8, IM V6 and IM V5), from IM B5 (IM V3 and IM V1) and from IM B14 (IM V19 and IM V18) are possible, provided that no requirement exists for stamping of the type on the rating plate. The basic type IM B3, IM B5 or IM B14 is stamped as standard on the rating plate. If mounted in a different position, the position must be specified to ensure that the condensation drainage holes are positioned correctly.

4) No IE class for 50 and 60 Hz because the motor is outside the validity for the efficiency classes according to IEC 60034-30-1:2014.

© Siemens AG 2018

2

Selection and ordering data

P_{rated}, 50 Hz/ P50	P_{rated}, 60 Hz/ P60 [1]	Frame size	Operating values at rated power: n_{rated}, 50 Hz	T_{rated}, 50 Hz	η_{rated}, 50 Hz, 4/4	η_{rated}, 50 Hz, 3/4	η_{rated}, 50 Hz, 2/4	cos-φ_{rated}, 50 Hz, 4/4	I_{rated}, 50 Hz, 400 V	T_{LR}/T_{rated}, 50 Hz	I_{LR}/I_{rated}, 50 Hz	T_B/T_{rated}, 50 Hz	L_{pfA}, 50 Hz	L_{WA}, 50 Hz	Cast-iron series 1LE1601 – *Performance Line* Article No.	$m_{IM\ B3}$	J
kW	kW	FS	rpm	Nm	%	%	%		A				dB(A)	dB(A)		kg	kgm²
• Cooling: Self-ventilated (IC 411) or with order code F90 forced-air cooled without external fan and fan cover (IC 418)																	
• Efficiency according to IEC 60034-30: IE2 High Efficiency, service factor (SF) 1.15																	
• Insulation: Thermal class 155 (temperature class F), IP55 degree of protection, utilization in accordance with thermal class 130 (temperature class B)																	
2-pole: 3000 rpm at 50 Hz, 3600 rpm at 60 Hz [1]																	
3	**3.45**	**100 L**	2905	9.9	84.6	85.5	84.6	0.84	6.1	2.3	7	3.3	67	79	**1LE1601-1AA4■-■■■■**	32	0.0044
4	**4.55**	**112 M**	2945	13	85.8	86.2	85.1	0.85	7.9	2.1	8	3.6	69	81	**1LE1601-1BA2■-■■■■**	39	0.0092
5.5	**6.3**	**132 S**	2950	18	87	88	87.6	0.87	10.5	1.8	6.6	2.9	68	80	**1LE1601-1CA0■-■■■■**	57	0.02
7.5	**8.6**	**132 S**	2950	24	88.1	88.5	87.6	0.87	14.1	2.2	7.5	3.1	68	80	**1LE1601-1CA1■-■■■■**	61	0.024
11	**12.6**	**160 M**	2955	36	89.4	89.3	88	0.87	20.5	2.1	7.4	3.2	70	82	**1LE1601-1DA2■-■■■■**	96	0.045
15	**17.3**	**160 M**	2955	48	90.3	90.7	90	0.88	27	2.4	7.6	3.4	70	82	**1LE1601-1DA3■-■■■■**	104	0.053
18.5	**21.3**	**160 L**	2955	60	90.9	91.3	90.6	0.88	33.5	2.9	7.9	3.6	70	82	**1LE1601-1DA4■-■■■■**	113	0.061
22	**24.5**	**180 M**	2940	71	91.3	91.8	91.3	0.87	40	2.7	7.4	3.6	77	84	**1LE1601-1EA2■-■■■■**	145	0.069
30	**33.5**	**200 L**	2960	97	92	92.3	91.8	0.87	54	2.5	6.9	3.3	78	85	**1LE1601-2AA4■-■■■■**	200	0.13
37	**41.5**	**200 L**	2960	119	92.5	93	92.7	0.88	66	2.7	7.4	3.5	78	85	**1LE1601-2AA5■-■■■■**	225	0.15
45	**51**	**225 M**	2965	145	92.9	93.1	92.5	0.88	79	2.7	7.8	3.7	76	89	**1LE1601-2BA2■-■■■■**	295	0.23
55	**62**	**250 M**	2970	177	93.2	93.3	92.4	0.88	97	2.3	6.8	3.1	76	89	**1LE1601-2CA2■-■■■■**	360	0.4
75	**84**	**280 S**	2978	240	93.8	93.6	92.4	0.86	134	2.5	7.2	3.2	76	89	**1LE1601-2DA0■-■■■■**	490	0.71
90	**101**	**280 M**	2975	289	94.1	94.2	93.5	0.88	157	2.5	7.1	3.1	76	89	**1LE1601-2DA2■-■■■■**	530	0.83
110	**123**	**315 S**	2982	352	94.3	94.2	93.3	0.9	187	2.4	7.3	3	77	91	**1LE1601-3AA0■-■■■■**	720	1.3
132	**148**	**315 M**	2982	423	94.6	94.7	94.1	0.91	220	2.4	7.2	3.1	77	91	**1LE1601-3AA2■-■■■■**	880	1.6
160	**180**	**315 L**	2982	512	94.8	94.9	94.3	0.92	265	2.3	7	3.1	80	95	**1LE1601-3AA4■-■■■■**	930	1.8
200	**224**	**315 L**	2982	640	95	95.2	94.8	0.92	330	2.5	7.3	3	80	95	**1LE1601-3AA5■-■■■■**	1130	2.2

Voltages [2]		Version			Order code
50 Hz 230 VΔ/400 VY	60 Hz [1] 460 VY	**Standard**	**2**	**2**	–
50 Hz 400 VΔ/690 VY	60 Hz [1] 460 VΔ	**Standard**	**3**	**4**	–
50 Hz 500 VY		Without additional charge	**2**	**7**	–
50 Hz 500 VΔ		Without additional charge	**4**	**0**	–
For other voltages [1] and more information, see from page 2/88			**9**	**0**	. . .

Types of construction		Version		Order code
Without flange	IM B3 [3]	**Standard**	**A**	–
With flange	IM B5 [3]	With additional charge	**F**	–
With flange	IM B14 [3]	With additional charge	**K**	–
For other types of construction and more information, see from page 2/94			■	. . .

Motor protection	Version		Order code
PTC thermistor with 3 temperature sensors	**Standard**	**B**	–
For other motor protection and more information, see from page 2/99		■	. . .

Terminal box position	Version	
Terminal box at top	**Standard**	**4**
For other terminal box positions and more information, see from page 2/101		■

Special versions		Order code(s)
Forced-air cooled motors w/o ext. fan/fan cover (IC 418)	**1LE1601-. . . . ■-■■■■-Z**	**F90+. . .+. . .+. . .**
For options, see from page 2/109	**1LE1601-. . . . ■-■■■■-Z**	**. . .+. . .+. . .+. . .**

1) Operating values at rated power for 60 Hz are stored in the Drive Technology Configurator (DT Configurator; see Appendix, "Tools and engineering").

2) Parallel supply lines are required in the case of connection to ≤ 240 V. For frame size 315 with connection to ≤ 240 V, due to the high current, a drilled, removable entry plate (order code **R52**) or a larger terminal box (order code **R50**) can be used. Order codes **R52** and **R50** alter the motor dimensions.

3) Types derived from IM B3 (IM B6/7/8, IM V6 and IM V5), from IM B5 (IM V3 and IM V1) and from IM B14 (IM V19 and IM V18) are possible, provided that no requirement exists for stamping of the type on the rating plate. The basic type IM B3, IM B5 or IM B14 is stamped as standard on the rating plate. If mounted in a different position, the position must be specified to ensure that the condensation drainage holes are positioned correctly.

© Siemens AG 2018

Please note minimum legal efficiencies in the European Economic Area!

IE2

Selection and ordering data (continued)

P_{rated}, 50 Hz/ P50	P_{rated}, 60 Hz/ P60 [1]	Frame size	Operating values at rated power: n_{rated}, 50 Hz	T_{rated}, 50 Hz	η_{rated}, 50 Hz, 4/4	η_{rated}, 50 Hz, 3/4	η_{rated}, 50 Hz, 2/4	cos-φ_{rated}, 50 Hz, 4/4	I_{rated}, 50 Hz, 400 V	T_{LR}/T_{rated}, 50 Hz	I_{LR}/I_{rated}, 50 Hz	T_B/T_{rated}, 50 Hz	L_{pfA}, 50 Hz	L_{WA}, 50 Hz	Cast-iron series 1LE1601 – *Performance Line* Article No.	$m_{IM\ B3}$	J
kW	kW	FS	rpm	Nm	%	%	%		A				dB(A)	dB(A)		kg	kgm²
• Cooling: Self-ventilated (IC 411) or with order code F90 forced-air cooled without external fan and fan cover (IC 418) • Efficiency according to IEC 60034-30: IE2 High Efficiency, service factor (SF) 1.15 • Insulation: Thermal class 155 (temperature class F), IP55 degree of protection, utilization in accordance with thermal class 130 (temperature class B)																	
4-pole: 1500 rpm at 50 Hz, 1800 rpm at 60 Hz [1]																	
2.2	**2.55**	**100 L**	1455	14	84.3	85.1	84.2	0.81	4.65	2.1	6.9	3.3	60	72	**1LE1601-1AB4■-■■■■**	32	0.0086
3	**3.45**	**100 L**	1455	20	85.5	86.4	85.6	0.82	6.2	2	6.9	3.1	60	72	**1LE1601-1AB5■-■■■■**	37	0.011
4	**4.55**	**112 M**	1460	26	86.6	87.3	86.4	0.81	8.2	2.5	7.1	3.2	58	70	**1LE1601-1BB2■-■■■■**	46	0.014
5.5	**6.3**	**132 S**	1465	36	87.7	88.4	87.6	0.8	11.3	2.3	6.9	2.9	64	76	**1LE1601-1CB0■-■■■■**	61	0.027
7.5	**8.6**	**132 M**	1465	49	88.7	89.8	89.8	0.83	14.7	2.3	6.9	2.9	64	76	**1LE1601-1CB2■-■■■■**	75	0.034
11	**12.6**	**160 M**	1470	71	89.8	91	90.9	0.85	21	2.1	6.7	2.8	65	77	**1LE1601-1DB2■-■■■■**	96	0.065
15	**17.3**	**160 L**	1475	97	90.6	91.2	90.8	0.85	28	2.3	7.3	3	65	77	**1LE1601-1DB4■-■■■■**	104	0.083
18.5	**21.3**	**180 M**	1465	121	91.2	92	91.9	0.84	35	2.5	7.2	3.4	61	74	**1LE1601-1EB2■-■■■■**	160	0.12
22	**25.3**	**180 L**	1465	143	91.6	92.2	91.9	0.84	41.5	2.6	7.3	3.5	69	76	**1LE1601-1EB4■-■■■■**	170	0.13
30	**34.5**	**200 L**	1470	195	92.3	92.9	92.6	0.84	56	2.5	6.7	3.3	70	77	**1LE1601-2AB5■-■■■■**	230	0.2
37	**42.5**	**225 S**	1470	240	92.7	93.5	93.5	0.88	65	2.3	6.6	2.9	66	79	**1LE1601-2BB0■-■■■■**	280	0.42
45	**52**	**225 M**	1475	291	93.1	93.8	93.7	0.87	80	2.5	6.9	3.1	66	79	**1LE1601-2BB2■-■■■■**	305	0.46
55	**63**	**250 M**	1480	355	93.5	93.9	93.5	0.85	100	2.7	6.8	3	66	79	**1LE1601-2CB2■-■■■■**	385	0.75
75	**86**	**280 S**	1485	482	94	94.2	93.8	0.87	132	2.5	6.8	3	71	85	**1LE1601-2DB0■-■■■■**	550	1.3
90	**104**	**280 M**	1486	578	94.2	94.3	93.6	0.87	159	2.6	7.3	3.1	71	85	**1LE1601-2DB2■-■■■■**	570	1.4
110	**127**	**315 S**	1490	705	94.5	94.6	94	0.86	195	2.7	7.4	3	72	86	**1LE1601-3AB0■-■■■■**	740	2
132	**152**	**315 M**	1490	846	94.7	94.9	94.6	0.87	230	2.7	7.1	2.9	75	89	**1LE1601-3AB2■-■■■■**	870	2.3
160	**184**	**315 L**	1490	1025	94.9	95	94.5	0.87	280	2.8	7.2	3.1	76	91	**1LE1601-3AB4■-■■■■**	940	2.8
200	**230**	**315 L**	1490	1282	95.1	95.3	94.7	0.87	350	3.1	7.5	3.2	77	92	**1LE1601-3AB5■-■■■■**	1140	3.5

Voltages [2]		Version				Order code
50 Hz 230 VΔ/400 VY	60 Hz [1] 460 VY	**Standard**	**2**	**2**		–
50 Hz 400 VΔ/690 VY	60 Hz [1] 460 VΔ	**Standard**	**3**	**4**		–
50 Hz 500 VY		Without additional charge	**2**	**7**		–
50 Hz 500 VΔ		Without additional charge	**4**	**0**		–
For other voltages [1] and more information, see from page 2/88			**9**	**0**		. . .
Types of construction		Version				Order code
Without flange	IM B3 [3]	**Standard**			**A**	–
With flange	IM B5 [3]	With additional charge			**F**	–
With flange	IM B14 [3]	With additional charge			**K**	–
For other types of construction and more information, see from page 2/94					■	. . .
Motor protection		Version				Order code
PTC thermistor with 3 temperature sensors		**Standard**			**B**	–
For other motor protection and more information, see from page 2/99					■	. . .
Terminal box position		Version				
Terminal box at top		**Standard**			**4**	
For other terminal box positions and more information, see from page 2/101					■	
Special versions						Order code(s)
Forced-air cooled motors w/o ext. fan/fan cover (IC 418)			**1LE1601-. . . . ■-■■■■-Z**			**F90+. . .+. . .+. . .**
For options, see from page 2/109			**1LE1601-. . . . ■-■■■■-Z**			**. . .+. . .+. . .+. . .**

1) Operating values at rated power for 60 Hz are stored in the Drive Technology Configurator (DT Configurator; see Appendix, "Tools and engineering").

2) Parallel supply lines are required in the case of connection to ≤ 240 V. For frame size 315 with connection to ≤ 240 V, due to the high current, a drilled, removable entry plate (order code **R52**) or a larger terminal box (order code **R50**) can be used. Order codes **R52** and **R50** alter the motor dimensions.

3) Types derived from IM B3 (IM B6/7/8, IM V6 and IM V5), from IM B5 (IM V3 and IM V1) and from IM B14 (IM V19 and IM V18) are possible, provided that no requirement exists for stamping of the type on the rating plate. The basic type IM B3, IM B5 or IM B14 is stamped as standard on the rating plate. If mounted in a different position, the position must be specified to ensure that the condensation drainage holes are positioned correctly.

© Siemens AG 2018

Selection and ordering data (continued)

P_{rated}, 50 Hz/ P50	P_{rated}, 60 Hz/ P60 [1]	Frame size	Operating values at rated power: n_{rated}, 50 Hz	T_{rated}, 50 Hz	Different IE class 60 Hz/P60	η_{rated}, 50 Hz, 4/4	η_{rated}, 50 Hz, 3/4	η_{rated}, 50 Hz, 2/4	cos-φ_{rated}, 50 Hz, 4/4	I_{rated}, 50 Hz, 400 V	T_{LR}/T_{rated}, 50 Hz	I_{LR}/I_{rated}, 50 Hz	T_B/T_{rated}, 50 Hz	L_{pfA}, 50 Hz	L_{WA}, 50 Hz	Cast-iron series 1LE1601 – *Performance Line* Article No.	$m_{IM\ B3}$	J
kW	kW	FS	rpm	Nm		%	%	%		A				dB(A)	dB(A)		kg	kgm²
• Cooling: Self-ventilated (IC 411) or with order code F90 forced-air cooled without external fan and fan cover (IC 418)																		
• Efficiency according to IEC 60034-30: IE2 High Efficiency, service factor (SF) 1.15																		
• Insulation: Thermal class 155 (temperature class F), IP55 degree of protection, utilization in accordance with thermal class 130 (temperature class B)																		
6-pole: 1000 rpm at 50 Hz, 1200 rpm at 60 Hz [1]																		
1.5	1.75	100 L	970	15		79.8	80.5	79	0.73	3.7	2	5.4	2.8	59	71	1LE1601-1AC4■-■■■■	36	0.011
2.2	2.55	112 M	965	22		81.8	82.7	81.7	0.75	5.2	2	5	2.8	62	74	1LE1601-1BC2■-■■■■	41	0.014
3	3.45	132 S	970	30		83.3	83.4	81	0.72	7.2	1.6	5	2.5	63	75	1LE1601-1CC0■-■■■■	56	0.024
4	4.55	132 M	970	39		84.6	85.5	84.3	0.75	9.1	1.6	5	2.3	63	75	1LE1601-1CC2■-■■■■	61	0.029
5.5	6.3	132 M	970	54		86	87.1	86.4	0.76	12.1	1.9	5.6	2.6	63	75	1LE1601-1CC3■-■■■■	70	0.037
7.5	8.6	160 M	975	73		87.2	87.9	87.2	0.74	16.8	1.9	4.7	2.2	67	79	1LE1601-1DC2■-■■■■	106	0.075
11	12.6	160 L	975	108		88.7	89.7	89.3	0.76	23.5	1.9	4.8	2.2	67	79	1LE1601-1DC4■-■■■■	122	0.098
15	18	180 L	975	147		89.7	90.1	89.5	0.78	31	2.5	6	3.1	57	70	1LE1601-1EC4■-■■■■	155	0.17
18.5	22	200 L	978	181	IE1	90.4	91.4	91.3	0.82	36	2.4	5.8	2.6	63	76	1LE1601-2AC4■-■■■■	200	0.25
22	26.5	200 L	978	215	IE1	90.9	91.7	91.4	0.82	42.5	2.5	6.2	2.6	63	76	1LE1601-2AC5■-■■■■	220	0.3
30	36	225 M	980	292	IE1	91.7	92.5	92.3	0.83	57	2.5	5.6	2.7	65	78	1LE1601-2BC2■-■■■■	300	0.58
37	44.5	250 M	982	360	IE1	92.2	93.1	93.1	0.83	70	2.8	6	2.5	62	77	1LE1601-2CC2■-■■■■	370	0.86
45	54	280 S	985	436	IE1	92.7	93.4	93.2	0.84	83	2.7	6.3	2.6	65	79	1LE1601-2DC0■-■■■■	460	1.1
55	66	280 M	985	533	IE1	93.1	93.9	94	0.86	99	2.5	6.4	2.6	65	79	1LE1601-2DC2■-■■■■	510	1.4
75	90	315 S	988	725	IE1	93.7	94	93.6	0.84	138	2.5	6.7	2.8	65	79	1LE1601-3AC0■-■■■■	660	2.1
90	108	315 M	988	870	IE1	94	94.3	93.6	0.84	165	2.6	6.9	2.8	65	79	1LE1601-3AC2■-■■■■	730	2.5
110	132	315 L	988	1063	IE1	94.3	94.6	94.5	0.86	196	2.7	7	2.8	68	82	1LE1601-3AC4■-■■■■	940	3.6
132	158	315 L	988	1276		94.6	94.9	94.7	0.86	235	3	7.5	2.9	69	84	1LE1601-3AC5■-■■■■	990	4
160	192	315 L	988	1546		94.8	94.7	94.4	0.86	285	3.1	7.7	3.3	69	84	1LE1601-3AC6■-■■■■	1160	4.7

Voltages [2]		Version				Order code
50 Hz 230 VΔ/400 VY	60 Hz [1] 460 VY	**Standard**	2	2		–
50 Hz 400 VΔ/690 VY	60 Hz [1] 460 VΔ	**Standard**	3	4		–
50 Hz 500 VY		Without additional charge	2	7		–
50 Hz 500 VΔ		Without additional charge	4	0		–
For other voltages [1] and more information, see from page 2/88			9	0		...
Types of construction		Version				Order code
Without flange	IM B3 [3]	**Standard**			A	–
With flange	IM B5 [3]	With additional charge			F	–
With flange	IM B14 [3]	With additional charge			K	–
For other types of construction and more information, see from page 2/94					■	...
Motor protection		Version				Order code
PTC thermistor with 3 temperature sensors		**Standard**			B	–
For other motor protection and more information, see from page 2/99					■	...
Terminal box position		Version				
Terminal box at top		**Standard**			4	
For other terminal box positions and more information, see from page 2/101					■	
Special versions						Order code(s)
Forced-air cooled motors w/o ext. fan/fan cover (IC 418)		1LE1601-....■-■■■■-Z				F90+...+...+...
For options, see from page 2/109		1LE1601-....■-■■■■-Z				...+...+...+...

[1] Operating values at rated power for 60 Hz are stored in the Drive Technology Configurator (DT Configurator; see Appendix, "Tools and engineering").

[2] Parallel supply lines are required in the case of connection to ≤ 240 V. For frame size 315 with connection to ≤ 240 V, due to the high current, a drilled, removable entry plate (order code **R52**) or a larger terminal box (order code **R50**) can be used. Order codes **R52** and **R50** alter the motor dimensions.

[3] Types derived from IM B3 (IM B6/7/8, IM V6 and IM V5), from IM B5 (IM V3 and IM V1) and from IM B14 (IM V19 and IM V18) are possible, provided that no requirement exists for stamping of the type on the rating plate. The basic type IM B3, IM B5 or IM B14 is stamped as standard on the rating plate. If mounted in a different position, the position must be specified to ensure that the condensation drainage holes are positioned correctly.

© Siemens AG 2018

IE2

Selection and ordering data (continued)

P_{rated}, 50 Hz/ P50	P_{rated}, 60 Hz/ P60 [1]	Frame size	Operating values at rated power: n_{rated}, 50 Hz	T_{rated}, 50 Hz	Different IE class 60 Hz/P60	η_{rated}, 50 Hz, 4/4	η_{rated}, 50 Hz, 3/4	η_{rated}, 50 Hz, 2/4	cos-φ_{rated}, 50 Hz, 4/4	I_{rated}, 50 Hz, 400 V	T_{LR}/T_{rated}, 50 Hz	I_{LR}/I_{rated}, 50 Hz	T_B/T_{rated}, 50 Hz	L_{pfA}, 50 Hz	L_{WA}, 50 Hz	Cast-iron series 1LE1601 – *Performance Line* Article No.	$m_{IM\ B3}$	J
kW	kW	FS	rpm	Nm		%	%	%		A				dB(A)	dB(A)		kg	kgm^2
• Cooling: Self-ventilated (IC 411) or with order code F90 forced-air cooled without external fan and fan cover (IC 418) • Efficiency according to IEC 60034-30: IE2 High Efficiency, service factor (SF) 1.15 • Insulation: Thermal class 155 (temperature class F), IP55 degree of protection, utilization in accordance with thermal class 130 (temperature class B)																		
8-pole: 750 rpm at 50 Hz, 900 rpm at 60 Hz [1]																		
0.75	**0.86**	**100 L**	705	10		66.2	65.7	61.6	0.61	2.7	1.5	3.2	2.1	60	72	**1LE1601-1AD4■-■■■■**	32	0.0086
1.1	**1.27**	**100 L**	695	15		70.8	72.3	69.6	0.65	3.45	1.4	3.2	1.9	60	72	**1LE1601-1AD5■-■■■■**	36	0.011
1.5	**1.75**	**112 M**	725	20		74.1	73.9	71.2	0.63	4.65	1.6	4	2.4	63	75	**1LE1601-1BD2■-■■■■**	53	0.017
2.2	**2.55**	**132 S**	725	29		77.6	78.2	76.6	0.62	6.6	1.4	3.5	2	63	75	**1LE1601-1CD0■-■■■■**	64	0.034
3	**3.45**	**132 M**	720	40	IE1	80	80.7	79.2	0.62	8.7	1.4	3.7	2	63	75	**1LE1601-1CD2■-■■■■**	67	0.037
4	**4.55**	**160 M**	730	52		81.9	82.6	81.4	0.67	10.5	1.6	3.7	1.9	63	75	**1LE1601-1DD2■-■■■■**	98	0.065
5.5	**6.3**	**160 M**	730	72		83.8	84.2	83	0.67	14.1	1.7	3.9	2	63	75	**1LE1601-1DD3■-■■■■**	111	0.083
7.5	**8.6**	**160 L**	725	99		85.3	86.4	86	0.7	18.1	1.6	3.8	1.9	63	75	**1LE1601-1DD4■-■■■■**	123	0.098
11	**13.2**	**180 L**	720	146	IE1	86.9	88	87.6	0.7	26	2.3	4.9	2.6	72	80	**1LE1601-1ED4■-■■■■**	155	0.195
15	**18**	**200 L**	718	199		88	89.5	89.9	0.76	32.5	2.4	5.4	2.8	58	65	**1LE1601-2AD5■-■■■■**	220	0.344
18.5	**22**	**225 S**	730	242	IE1	89	89.9	89.5	0.78	38.5	2.2	5.4	2.7	59	72	**1LE1601-2BD0■-■■■■**	250	0.43
22	**26.5**	**225 M**	730	288		90.3	91.3	91.1	0.8	44	2.3	5.5	2.7	58	71	**1LE1601-2BD2■-■■■■**	270	0.5
30	**36**	**250 M**	732	391		91.3	92.2	92	0.8	59	2.4	5.6	2.7	60	73	**1LE1601-2CD2■-■■■■**	370	0.86
37	**44.5**	**280 S**	736	480		91.9	92.5	92.1	0.78	75	2.3	5.4	2.4	63	77	**1LE1601-2DD0■-■■■■**	460	1.1
45	**54**	**280 M**	738	582		92.4	92.8	92.4	0.79	89	2.5	5.7	2.5	66	80	**1LE1601-2DD2■-■■■■**	510	1.4
55	**66**	**315 S**	740	710		92.9	93.3	92.9	0.8	107	2.2	5.8	2.6	69	83	**1LE1601-3AD0■-■■■■**	640	2
75	**90**	**315 M**	738	970		93.5	94.4	94.5	0.81	143	2.3	5.9	2.7	69	84	**1LE1601-3AD2■-■■■■**	720	2.5
90	**108**	**315 L**	740	1161		93.5	94.3	94.4	0.83	167	2.2	5.8	2.5	69	84	**1LE1601-3AD4■-■■■■**	860	3.1
110	**132**	**315 L**	740	1419		94.2	95	95.1	0.82	205	2.7	6.7	2.9	74	88	**1LE1601-3AD5■-■■■■**	980	3.9

Voltages [2]		Version			Order code
50 Hz 230 VΔ/400 VY	60 Hz [1] 460 VY	**Standard**	**2**	**2**	–
50 Hz 400 VΔ/690 VY	60 Hz [1] 460 VΔ	**Standard**	**3**	**4**	–
50 Hz 500 VY		Without additional charge	**2**	**7**	–
50 Hz 500 VΔ		Without additional charge	**4**	**0**	–
For other voltages [1] and more information, see from page 2/88			**9**	**0**	. . .

Types of construction		Version		Order code
Without flange	IM B3 [3]	**Standard**	**A**	–
With flange	IM B5 [3]	With additional charge	**F**	–
With flange	IM B14 [3]	With additional charge	**K**	–
For other types of construction and more information, see from page 2/94			■	. . .

Motor protection	Version		Order code
PTC thermistor with 3 temperature sensors	**Standard**	**B**	–
For other motor protection and more information, see from page 2/99		■	. . .

Terminal box position	Version	
Terminal box at top	**Standard**	**4**
For other terminal box positions and more information, see from page 2/101		■

Special versions		Order code(s)
Forced-air cooled motors w/o ext. fan/fan cover (IC 418)	**1LE1601-. . . . ■-■■■■-Z**	**F90+. . .+. . .+. . .**
For options, see from page 2/109	**1LE1601-. . . . ■-■■■■-Z**	**. . .+. . .+. . .+. . .**

[1] Operating values at rated power for 60 Hz are stored in the Drive Technology Configurator (DT Configurator; see Appendix, "Tools and engineering").

[2] Parallel supply lines are required in the case of connection to ≤ 240 V. For frame size 315 with connection to ≤ 240 V, due to the high current, a drilled, removable entry plate (order code **R52**) or a larger terminal box (order code **R50**) can be used. Order codes **R52** and **R50** alter the motor dimensions.

[3] Types derived from IM B3 (IM B6/7/8, IM V6 and IM V5), from IM B5 (IM V3 and IM V1) and from IM B14 (IM V19 and IM V18) are possible, provided that no requirement exists for stamping of the type on the rating plate. The basic type IM B3, IM B5 or IM B14 is stamped as standard on the rating plate. If mounted in a different position, the position must be specified to ensure that the condensation drainage holes are positioned correctly.

[4] No IE class for 50 and 60 Hz because the motor is outside the validity for the efficiency classes according to IEC 60034-30-1:2014.

© Siemens AG 2018

2

Selection and ordering data

P_{rated}, 50 Hz/ P50	P_{rated}, 60 Hz/ P60 [1]	Frame size	Operating values at rated power: n_{rated}, 50 Hz	T_{rated}, 50 Hz	Different IE class 60 Hz/P60	η_{rated}, 50 Hz, 4/4	η_{rated}, 50 Hz, 3/4	η_{rated}, 50 Hz, 2/4	cos-φ_{rated}, 50 Hz, 4/4	I_{rated}, 50 Hz, 400 V	T_{LR}/T_{rated}, 50 Hz	I_{LR}/I_{rated}, 50 Hz	T_B/T_{rated}, 50 Hz	L_{pfA}, 50 Hz	L_{WA}, 50 Hz	Cast-iron series 1LE1501 – *Basic Line* Article No.	$m_{IM\ B3}$	J
kW	kW	FS	rpm	Nm		%	%	%		A				dB(A)	dB(A)		kg	kgm²
• Cooling: Self-ventilated (IC 411) or with order code F90 forced-air cooled without external fan and fan cover (IC 418) • Efficiency according to IEC 60034-30: IE2 High Efficiency, service factor (SF) 1.15 • Insulation: Thermal class 155 (temperature class F), IP55 degree of protection, utilization in accordance with thermal class 130 (temperature class B)																		
2-pole: 3000 rpm at 50 Hz, 3600 rpm at 60 Hz [1]																		
4	**4.55**	**100 L**	2905	13		85.8	86.9	86.5	0.86	7.8	2.5	7.6	3.5	67	79	**1LE1501-1AA6■-■■■■**	45	0.0054
5.5	**6.3**	**112 M**	2945	18		87	87.8	87.4	0.88	10.4	2.3	8.5	3.8	69	81	**1LE1501-1BA6■-■■■■**	53	0.012
11	**12.6**	**132 M**	2950	36		89.4	90.1	89.9	0.89	20	2.3	7.9	3.2	68	80	**1LE1501-1CA6■-■■■■**	80	0.031
22	**25.3**	**160 L**	2955	71		91.3	91.8	91.4	0.89	39	3.1	8.4	3.7	70	82	**1LE1501-1DA6■-■■■■**	126	0.068
30	**33.5**	**180 L**	2940	97		92	92.6	92.3	0.89	53	2.3	7.8	3.4	76	83	**1LE1501-1EA6■-■■■■**	180	0.094
45	**51**	**200 L**	2950	146		92.9	93.2	92.9	0.87	81	2.5	7.1	3.2	77	84	**1LE1501-2AA6■-■■■■**	245	0.176
55	**62**	**225 M**	2960	177		93.2	93.6	93.2	0.88	97	2.5	7	3.3	76	89	**1LE1501-2BA6■-■■■■**	320	0.26
75	**84**	**250 M**	2970	241		93.8	93.6	92.6	0.84	137	2.2	7	3.3	75	89	**1LE1501-2CA6■-■■■■**	390	0.46
110	**123**	**280 M**	2978	353		94.3	94.5	94.1	0.9	187	2.9	8.5	3.6	80	91	**1LE1501-2DA6■-■■■■**	650	1.2
4-pole: 1500 rpm at 50 Hz, 1800 rpm at 60 Hz [1]																		
4	**4.55**	**100 L**	1460	26		86.6	88	87.5	0.8	8.3	2.2	7.5	3.5	60	72	**1LE1501-1AB6■-■■■■**	46	0.014
5.5	**6.3**	**112 M**	1460	36		87.7	88.2	87.2	0.81	11.2	2.5	7.1	3.2	58	70	**1LE1501-1BB6■-■■■■**	58	0.017
11	**12.6**	**132 M**	1465	72		89.8	90.9	90.9	0.84	21	2.6	7.7	3.1	64	76	**1LE1501-1CB6■-■■■■**	80	0.046
18.5	**21.3**	**160 L**	1475	120		91.2	91.8	91.3	0.85	34.5	2.5	7.7	3.3	65	77	**1LE1501-1DB6■-■■■■**	116	0.099
30	**34.5**	**180 L**	1465	196		92.3	93	92.9	0.81	58	2.5	7.3	3.3	70	77	**1LE1501-1EB6■-■■■■**	185	0.159
37	**42.5**	**200 L**	1470	240		92.7	93.5	93.6	0.84	69	2.4	7	3	68	75	**1LE1501-2AB6■-■■■■**	240	0.246
55	**63**	**225 M**	1475	356		93.5	94.2	94.1	0.84	101	2.5	5.8	2.7	69	82	**1LE1501-2BB6■-■■■■**	320	0.47
75	**86**	**250 M**	1480	484		94	94.5	94.3	0.86	134	2.3	6.2	2.8	74	87	**1LE1501-2CB6■-■■■■**	440	0.85
110	**127**	**280 M**	1485	707		94.5	94.9	94.8	0.87	193	2.5	6.9	3	73	87	**1LE1501-2DB6■-■■■■**	680	1.7

Voltages [2]		Version				Order code
50 Hz 230 VΔ/400 VY	60 Hz [1] 460 VY	**Standard**	**2**	**2**		–
50 Hz 400 VΔ/690 VY	60 Hz [1] 460 VΔ	**Standard**	**3**	**4**		–
50 Hz 500 VY		Without additional charge	**2**	**7**		–
50 Hz 500 VΔ		Without additional charge	**4**	**0**		–
For other voltages [1] and more information, see from page 2/88			**9**	**0**		. . .
Types of construction		Version				Order code
Without flange	IM B3 [3]	**Standard**			**A**	–
With flange	IM B5 [3]	With additional charge			**F**	–
With flange	IM B14 [3]	With additional charge			**K**	–
For other types of construction and more information, see from page 2/94					■	. . .
Motor protection		Version				Order code
Without		**Standard**				–
PTC thermistor with 3 temperature sensors		With additional charge				–
For other motor protection and more information, see from page 2/99						. . .
Terminal box position		Version				
Terminal box at top		**Standard**				**4**
For other terminal box positions and more information, see from page 2/101						■
Special versions						Order code(s)
For options, see from page 2/109						**1LE1501-. . . . ■-■■■■-Z** . . .+. . .+. . .+. . .

[1] Operating values at rated power for 60 Hz are stored in the Drive Technology Configurator (DT Configurator; see Appendix, "Tools and engineering").

[2] Parallel supply lines are required in the case of connection to ≤ 240 V. For frame size 315 with connection to ≤ 240 V, due to the high current, a drilled, removable entry plate (order code **R52**) or a larger terminal box (order code **R50**) can be used. Order codes **R52** and **R50** alter the motor dimensions.

[3] Types derived from IM B3 (IM B6/7/8, IM V6 and IM V5), from IM B5 (IM V3 and IM V1) and from IM B14 (IM V19 and IM V18) are possible, provided that no requirement exists for stamping of the type on the rating plate. The basic type IM B3, IM B5 or IM B14 is stamped as standard on the rating plate. If mounted in a different position, the position must be specified to ensure that the condensation drainage holes are positioned correctly.

© Siemens AG 2018

IE2

Selection and ordering data (continued)

P_{rated}, 50 Hz/ P50	P_{rated}, 60 Hz/ P60 [1]	Frame size	Operating values at rated power: n_{rated}, 50 Hz	T_{rated}, 50 Hz	Different IE class 60 Hz/P60	η_{rated}, 50 Hz, 4/4	η_{rated}, 50 Hz, 3/4	η_{rated}, 50 Hz, 2/4	cos-φ_{rated}, 50 Hz, 4/4	I_{rated}, 50 Hz, 400 V	T_{LR}/T_{rated}, 50 Hz	I_{LR}/I_{rated}, 50 Hz	T_B/T_{rated}, 50 Hz	L_{pfA}, 50 Hz	L_{WA}, 50 Hz	Cast-iron series 1LE1501 – *Basic Line* Article No.	$m_{IM\ B3}$	J
kW	kW	FS	rpm	Nm		%	%	%		A				dB(A)	dB(A)		kg	kgm^2
• Cooling: Self-ventilated (IC 411) or with order code F90 forced-air cooled without external fan and fan cover (IC 418) • Efficiency according to IEC 60034-30: IE2 High Efficiency, service factor (SF) 1.15 • Insulation: Thermal class 155 (temperature class F), IP55 degree of protection, utilization in accordance with thermal class 130 (temperature class B)																		
6-pole: 1000 rpm at 50 Hz, 1200 rpm at 60 Hz [1]																		
2.2	**2.55**	**100 L**	965	22	IE1	81.8	83.3	82.7	0.76	5.1	1.7	4.9	2.5	59	71	**1LE1501-1AC6■-■■■■**	49	0.014
3	**3.45**	**112 M**	965	30		83.3	84	82.7	0.74	7	2.1	5.4	2.7	62	74	**1LE1501-1BC6■-■■■■**	53	0.017
7.5	**8.6**	**132 M**	970	74		87.2	88.1	87.1	0.75	16.6	2	5.6	2.6	63	75	**1LE1501-1CC6■-■■■■**	83	0.046
15	**17.3**	**160 L**	975	147	IE1	89.7	90.4	89.7	0.75	32	2	5.2	2.4	67	79	**1LE1501-1DC6■-■■■■**	147	0.12
18.5	**22**	**180 L**	975	181		90.4	90.9	90.5	0.77	38.5	2.3	6	2.9	67	80	**1LE1501-1EC6■-■■■■**	165	0.206
30	**34.5**	**200 L**	975	294		91.7	92.5	92.4	0.77	61	2.6	6.3	2.7	68	75	**1LE1501-2AC6■-■■■■**	240	0.381
37	**44.5**	**225 M**	978	361	IE1	92.2	93	92.9	0.83	70	2.5	6.3	2.9	64	77	**1LE1501-2BC6■-■■■■**	325	0.67
45	**54**	**250 M**	985	436	IE1	92.7	93.4	93.4	0.84	83	2.4	6.6	2.7	67	81	**1LE1501-2CC6■-■■■■**	410	1
75	**90**	**280 M**	986	726		93.7	94.3	94.4	0.85	136	3.2	7	2.9	66	80	**1LE1501-2DC6■-■■■■**	570	1.8
8-pole: 750 rpm at 50 Hz, 900 rpm at 60 Hz [1]																		
15	**18**	**180 L**	720	199	IE1	88	89.2	89	0.73	33.5	2.2	4.9	2.5	67	75	**1LE1501-1ED6■-■■■■**	190	0.263
18.5	**22**	**200 L**	720	245	IE1	88.6	89.9	90.2	0.78	38.5	2.6	5.8	3	65	72	**1LE1501-2AD6■-■■■■**	250	0.416
30	**36**	**225 M**	732	391		90.8	92	92.1	0.76	63	2.8	6.1	3.2	62	76	**1LE1501-2BD6■-■■■■**	325	0.67
37	**44.5**	**250 M**	730	484		91.6	92.6	92.7	0.83	70	2.3	5.5	2.6	63	77	**1LE1501-2CD6■-■■■■**	405	1
55	**66**	**280 M**	736	714		92.9	93.4	93	0.8	107	2.5	5.9	2.5	70	81	**1LE1501-2DD6■-■■■■**	550	1.6

Voltages [2]		Version					Order code
50 Hz 230 VΔ/400 VY	60 Hz [1] 460 VY	**Standard**	**2**	**2**			–
50 Hz 400 VΔ/690 VY	60 Hz [1] 460 VΔ	**Standard**	**3**	**4**			–
50 Hz 500 VY		Without additional charge	**2**	**7**			–
50 Hz 500 VΔ		Without additional charge	**4**	**0**			–
For other voltages [1] and more information, see from page 2/88			**9**	**0**			. . .
Types of construction		Version					Order code
Without flange	IM B3 [3]	**Standard**			**A**		–
With flange	IM B5 [3]	With additional charge			**F**		–
With flange	IM B14 [3]	With additional charge			**K**		–
For other types of construction and more information, see from page 2/94					■		. . .
Motor protection		Version					Order code
Without		**Standard**				**A**	–
PTC thermistor with 1 or 3 temperature sensors		With additional charge				**B**	–
For other motor protection and more information, see from page 2/99						■	. . .
Terminal box position		Version					
Terminal box at top		**Standard**					**4**
For other terminal box positions and more information, see from page 2/101							■
Special versions							Order code(s)
For options, see from page 2/109		**1LE1501-. . . . ■-■■■■-Z**					. . .+. . .+. . .+. . .

[1] Operating values at rated power for 60 Hz are stored in the Drive Technology Configurator (DT Configurator; see Appendix, "Tools and engineering").

[2] Parallel supply lines are required in the case of connection to ≤ 240 V. For frame size 315 with connection to ≤ 240 V, due to the high current, a drilled, removable entry plate (order code **R52**) or a larger terminal box (order code **R50**) can be used. Order codes **R52** and **R50** alter the motor dimensions.

[3] Types derived from IM B3 (IM B6/7/8, IM V6 and IM V5), from IM B5 (IM V3 and IM V1) and from IM B14 (IM V19 and IM V18) are possible, provided that no requirement exists for stamping of the type on the rating plate. The basic type IM B3, IM B5 or IM B14 is stamped as standard on the rating plate. If mounted in a different position, the position must be specified to ensure that the condensation drainage holes are positioned correctly.

© Siemens AG 2018

2

Selection and ordering data

P_{rated}, 50 Hz/ P50	P_{rated}, 60 Hz/ P60 [1]	Frame size	Operating values at rated power: n_{rated}, 50 Hz	T_{rated}, 50 Hz	Different IE class 60 Hz/P60	η_{rated}, 50 Hz, 4/4	η_{rated}, 50 Hz, 3/4	η_{rated}, 50 Hz, 2/4	cos-φ_{rated}, 50 Hz, 4/4	I_{rated}, 50 Hz, 400 V	T_{LR}/T_{rated}, 50 Hz	I_{LR}/I_{rated}, 50 Hz	T_B/T_{rated}, 50 Hz	L_{pfA}, 50 Hz	L_{WA}, 50 Hz	Cast-iron series 1LE1601 – *Performance Line* Article No.	$m_{IM\ B3}$	J
kW	kW	FS	rpm	Nm		%	%	%		A				dB(A)	dB(A)		kg	kgm^2
• Cooling: Self-ventilated (IC 411) or with order code F90 forced-air cooled without external fan and fan cover (IC 418) • Efficiency according to IEC 60034-30: IE2 High Efficiency, service factor (SF) 1.15 • Insulation: Thermal class 155 (temperature class F), IP55 degree of protection, utilization in accordance with thermal class 130 (temperature class B)																		
2-pole: 3000 rpm at 50 Hz, 3600 rpm at 60 Hz [1]																		
4	**4.55**	**100 L**	2905	13		85.8	86.9	86.5	0.86	7.8	2.5	7.6	3.5	67	79	**1LE1601-1AA6■-■■■■**	45	0.0054
5.5	**6.3**	**112 M**	2945	18		87	87.8	87.4	0.88	10.4	2.3	8.5	3.8	69	81	**1LE1601-1BA6■-■■■■**	53	0.012
11	**12.6**	**132 M**	2950	36		89.4	90.1	89.9	0.89	20	2.3	7.9	3.2	68	80	**1LE1601-1CA6■-■■■■**	80	0.031
22	**25.3**	**160 L**	2955	71		91.3	91.8	91.4	0.89	39	3.1	8.4	3.7	70	82	**1LE1601-1DA6■-■■■■**	126	0.068
30	**33.5**	**180 L**	2940	97		92	92.6	92.3	0.89	53	2.3	7.8	3.4	76	83	**1LE1601-1EA6■-■■■■**	180	0.094
45	**51**	**200 L**	2950	146		92.9	93.2	92.9	0.87	81	2.5	7.1	3.2	77	84	**1LE1601-2AA6■-■■■■**	245	0.176
55	**62**	**225 M**	2960	177		93.2	93.6	93.2	0.88	97	2.5	7	3.3	76	89	**1LE1601-2BA6■-■■■■**	320	0.26
75	**84**	**250 M**	2970	241		93.8	93.6	92.6	0.84	137	2.2	7	3.3	75	89	**1LE1601-2CA6■-■■■■**	390	0.46
110	**123**	**280 M**	2978	353		94.3	94.5	94.1	0.9	187	2.9	8.5	3.6	80	91	**1LE1601-2DA6■-■■■■**	650	1.2
4-pole: 1500 rpm at 50 Hz, 1800 rpm at 60 Hz [1]																		
4	**4.55**	**100 L**	1460	26		86.6	88	87.5	0.8	8.3	2.2	7.5	3.5	60	72	**1LE1601-1AB6■-■■■■**	46	0.014
5.5	**6.3**	**112 M**	1460	36		87.7	88.2	87.2	0.81	11.2	2.5	7.1	3.2	58	70	**1LE1601-1BB6■-■■■■**	58	0.017
11	**12.6**	**132 M**	1465	72		89.8	90.9	90.9	0.84	21	2.6	7.7	3.1	64	76	**1LE1601-1CB6■-■■■■**	80	0.046
18.5	**21.3**	**160 L**	1475	120		91.2	91.8	91.3	0.85	34.5	2.5	7.7	3.3	65	77	**1LE1601-1DB6■-■■■■**	116	0.099
30	**34.5**	**180 L**	1465	196		92.3	93	92.9	0.81	58	2.5	7.3	3.3	70	77	**1LE1601-1EB6■-■■■■**	185	0.159
37	**42.5**	**200 L**	1470	240		92.7	93.5	93.6	0.84	69	2.4	7	3	68	75	**1LE1601-2AB6■-■■■■**	240	0.246
55	**63**	**225 M**	1475	356		93.5	94.2	94.1	0.84	101	2.5	5.8	2.7	69	82	**1LE1601-2BB6■-■■■■**	320	0.47
75	**86**	**250 M**	1480	484		94	94.5	94.3	0.86	134	2.3	6.2	2.8	74	87	**1LE1601-2CB6■-■■■■**	440	0.85
110	**127**	**280 M**	1485	707		94.5	94.9	94.8	0.87	193	2.5	6.9	3	73	87	**1LE1601-2DB6■-■■■■**	680	1.7

Voltages [2]		Version			Order code
50 Hz 230 VΔ/400 VY	60 Hz [1] 460 VY	**Standard**	**2**	**2**	–
50 Hz 400 VΔ/690 VY	60 Hz [1] 460 VΔ	**Standard**	**3**	**4**	–
50 Hz 500 VY		Without additional charge	**2**	**7**	–
50 Hz 500 VΔ		Without additional charge	**4**	**0**	–
For other voltages [1] and more information, see from page 2/88			**9**	**0**	. . .

Types of construction		Version		Order code
Without flange	IM B3 [3]	**Standard**	**A**	–
With flange	IM B5 [3]	With additional charge	**F**	–
With flange	IM B14 [3]	With additional charge	**K**	–
For other types of construction and more information, see from page 2/94			■	. . .

Motor protection	Version		Order code
PTC thermistor with 3 temperature sensors	**Standard**	**B**	–
For other motor protection and more information, see from page 2/99		■	. . .

Terminal box position	Version	
Terminal box at top	**Standard**	**4**
For other terminal box positions and more information, see from page 2/101		■

Special versions		Order code(s)
For options, see from page 2/109	**1LE1601-. . . . ■-■■■■-Z**	. . .+. . .+. . .+. . .

1) Operating values at rated power for 60 Hz are stored in the Drive Technology Configurator (DT Configurator; see Appendix, "Tools and engineering").

2) Parallel supply lines are required in the case of connection to ≤ 240 V. For frame size 315 with connection to ≤ 240 V, due to the high current, a drilled, removable entry plate (order code **R52**) or a larger terminal box (order code **R50**) can be used. Order codes **R52** and **R50** alter the motor dimensions.

3) Types derived from IM B3 (IM B6/7/8, IM V6 and IM V5), from IM B5 (IM V3 and IM V1) and from IM B14 (IM V19 and IM V18) are possible, provided that no requirement exists for stamping of the type on the rating plate. The basic type IM B3, IM B5 or IM B14 is stamped as standard on the rating plate. If mounted in a different position, the position must be specified to ensure that the condensation drainage holes are positioned correctly.

© Siemens AG 2018

IE2

Selection and ordering data (continued)

			Operating values at rated power													**Cast-iron series**		
P_{rated}, 50 Hz/ P50	P_{rated}, 60 Hz/ P60 [1]	Frame size	n_{rated}, 50 Hz	T_{rated}, 50 Hz	Different IE class 60 Hz/P60	η_{rated}, 50 Hz, 4/4	η_{rated}, 50 Hz, 3/4	η_{rated}, 50 Hz, 2/4	cos-φ_{rated}, 50 Hz, 4/4	I_{rated}, 50 Hz, 400 V	T_{LR}/T_{rated}, 50 Hz	I_{LR}/I_{rated}, 50 Hz	T_B/T_{rated}, 50 Hz	L_{pfA}, 50 Hz	L_{WA}, 50 Hz	**1LE1601 –** *Performance Line* Article No.	$m_{IM\ B3}$	J
kW	kW	FS	rpm	Nm		%	%	%		A				dB(A)	dB(A)		kg	kgm^2
• Cooling: Self-ventilated (IC 411) or with order code F90 forced-air cooled without external fan and fan cover (IC 418)																		
• Efficiency according to IEC 60034-30: IE2 High Efficiency, service factor (SF) 1.15																		
• Insulation: Thermal class 155 (temperature class F), IP55 degree of protection, utilization in accordance with thermal class 130 (temperature class B)																		
6-pole: 1000 rpm at 50 Hz, 1200 rpm at 60 Hz [1]																		
2.2	**2.55**	**100 L**	965	22	IE1	81.8	83.3	82.7	0.76	5.1	1.7	4.9	2.5	59	71	**1LE1601-1AC6■-■■■■**	49	0.014
3	**3.45**	**112 M**	965	30		83.3	84	82.7	0.74	7	2.1	5.4	2.7	62	74	**1LE1601-1BC6■-■■■■**	53	0.017
7.5	**8.6**	**132 M**	970	74		87.2	88.1	87.1	0.75	16.6	2	5.6	2.6	63	75	**1LE1601-1CC6■-■■■■**	83	0.046
15	**17.3**	**160 L**	975	147	IE1	89.7	90.4	89.7	0.75	32	2	5.2	2.4	67	79	**1LE1601-1DC6■-■■■■**	147	0.12
18.5	**22**	**180 L**	975	181		90.4	90.9	90.5	0.77	38.5	2.3	6	2.9	67	80	**1LE1601-1EC6■-■■■■**	165	0.206
30	**34.5**	**200 L**	975	294		91.7	92.5	92.4	0.77	61	2.6	6.3	2.7	68	75	**1LE1601-2AC6■-■■■■**	240	0.381
37	**44.5**	**225 M**	978	361	IE1	92.2	93	92.9	0.83	70	2.5	6.3	2.9	64	77	**1LE1601-2BC6■-■■■■**	325	0.67
45	**54**	**250 M**	985	436	IE1	92.7	93.4	93.4	0.84	83	2.4	6.6	2.7	67	81	**1LE1601-2CC6■-■■■■**	410	1
75	**90**	**280 M**	986	726		93.7	94.3	94.4	0.85	136	3.2	7	2.9	66	80	**1LE1601-2DC6■-■■■■**	570	1.8
8-pole: 750 rpm at 50 Hz, 900 rpm at 60 Hz [1]																		
15	**18**	**180 L**	720	199	IE1	88	89.2	89	0.73	33.5	2.2	4.9	2.5	67	75	**1LE1601-1ED6■-■■■■**	190	0.263
18.5	**22**	**200 L**	720	245	IE1	88.6	89.9	90.2	0.78	38.5	2.6	5.8	3	65	72	**1LE1601-2AD6■-■■■■**	250	0.416
30	**36**	**225 M**	732	391		90.8	92	92.1	0.76	63	2.8	6.1	3.2	62	76	**1LE1601-2BD6■-■■■■**	325	0.67
37	**44.5**	**250 M**	730	484		91.6	92.6	92.7	0.83	70	2.3	5.5	2.6	63	77	**1LE1601-2CD6■-■■■■**	405	1
55	**66**	**280 M**	736	714		92.9	93.4	93	0.8	107	2.5	5.9	2.5	70	81	**1LE1601-2DD6■-■■■■**	550	1.6

Voltages [2]		Version					Order code
50 Hz 230 VΔ/400 VY	60 Hz [1] 460 VY	**Standard**	**2**	**2**			–
50 Hz 400 VΔ/690 VY	60 Hz [1] 460 VΔ	**Standard**	**3**	**4**			–
50 Hz 500 VY		Without additional charge	**2**	**7**			–
50 Hz 500 VΔ		Without additional charge	**4**	**0**			–
For other voltages [1] and more information, see from page 2/88			**9**	**0**			. . .
Types of construction		Version					Order code
Without flange	IM B3 [3]	**Standard**			**A**		–
With flange	IM B5 [3]	With additional charge			**F**		–
With flange	IM B14 [3]	With additional charge			**K**		–
For other types of construction and more information, see from page 2/94					■		. . .
Motor protection		Version					Order code
PTC thermistor with 1 or 3 temperature sensors		**Standard**				**B**	–
For other motor protection and more information, see from page 2/99						■	. . .
Terminal box position		Version					
Terminal box at top		**Standard**					**4**
For other terminal box positions and more information, see from page 2/101							■
Special versions							Order code(s)
For options, see from page 2/109		**1LE1601-. . . . ■-■■■■-Z**					. . .+. . .+. . .+. . .

[1] Operating values at rated power for 60 Hz are stored in the Drive Technology Configurator (DT Configurator; see Appendix, "Tools and engineering").

[2] Parallel supply lines are required in the case of connection to ≤ 240 V. For frame size 315 with connection to ≤ 240 V, due to the high current, a drilled, removable entry plate (order code **R52**) or a larger terminal box (order code **R50**) can be used. Order codes **R52** and **R50** alter the motor dimensions.

[3] Types derived from IM B3 (IM B6/7/8, IM V6 and IM V5), from IM B5 (IM V3 and IM V1) and from IM B14 (IM V19 and IM V18) are possible, provided that no requirement exists for stamping of the type on the rating plate. The basic type IM B3, IM B5 or IM B14 is stamped as standard on the rating plate. If mounted in a different position, the position must be specified to ensure that the condensation drainage holes are positioned correctly.

© Siemens AG 2018

2

Selection and ordering data

P_{rated}, 50 Hz/ P50	P_{rated}, 60 Hz/ P60 [1]	Frame size	Operating values at rated power: n_{rated}, 50 Hz	T_{rated}, 50 Hz	η_{rated}, 50 Hz, 4/4	η_{rated}, 50 Hz, 3/4	η_{rated}, 50 Hz, 2/4	cos-φ_{rated}, 50 Hz, 4/4	I_{rated}, 50 Hz, 400 V	T_{LR}/T_{rated}, 50 Hz	I_{LR}/I_{rated}, 50 Hz	T_B/T_{rated}, 50 Hz	L_{pfA}, 50 Hz	L_{WA}, 50 Hz	Aluminum series 1LE1002 Article No.	$m_{IM\ B3}$	J
kW	kW	FS	rpm	Nm	%	%	%		A				dB(A)	dB(A)	▲ New	kg	kgm²
• Cooling: Self-ventilated (IC 411) or with order code F90 forced-air cooled without external fan and fan cover (IC 418) • Efficiency according to IEC 60034-30: IE1 Standard Efficiency, service factor (SF) 1.1 • Insulation: Thermal class 155 (temperature class F), IP55 degree of protection, utilization in accordance with thermal class 130 (temperature class B)																	
2-pole: 3000 rpm at 50 Hz, 3600 rpm at 60 Hz [1]																	
0.18	0.21	63 M	2835	2.5	72.1	72.6	69.9	0.86	1.75	2.1	5.2	2.3	64	71	▲ 1LE1002-0BA2■-■■■■	4	0.00018
0.25	0.29	63 M	2840	3.7	75.0	75.7	73.4	0.86	2.45	2.5	5.7	2.5	64	71	▲ 1LE1002-0BA3■-■■■■	4	0.00022
0.37	0.43	71 M	2755	1.3	63.9	64.5	61.1	0.79	1.06	2.2	3.4	2.2	62	73	▲ 1LE1002-0CA2■-■■■■	5	0.00029
0.55	0.63	71 M	2750	1.9	69.0	69.9	66.5	0.79	1.46	2.2	3.7	2.2	62	73	▲ 1LE1002-0CA3■-■■■■	6	0.00041
0.75	0.86	80 M	2835	2.5	72.1	72.6	69.9	0.86	1.75	2.1	5.2	2.3	64	71	1LE1002-0DA2■-■■■■	9	0.00079
1.1	1.27	80 M	2840	3.7	75.0	75.7	73.4	0.86	2.45	2.5	5.7	2.5	64	71	1LE1002-0DA3■-■■■■	12	0.0010
1.5	1.75	90 S	2835	5.1	77.2	78.2	76.8	0.85	3.3	2.6	5.5	2.9	71	78	1LE1002-0EA0■-■■■■	13	0.0014
2.2	2.55	90 L	2855	7.4	79.7	80.9	81.3	0.85	4.7	2.8	6.5	3.2	71	78	1LE1002-0EA4■-■■■■	14	0.0018
3	3.45	100 L	2835	10	81.5	83.2	82.8	0.87	6.1	3.2	6.4	3.5	67	79	1LE1002-1AA4■-■■■■	20	0.0034
4	4.55	112 M	2935	13	83.1	83.0	80.8	0.85	8.2	3.3	8.3	4.2	69	81	1LE1002-1BA2■-■■■■	25	0.0067
5.5	6.3	132 S	2910	18	84.7	85.9	85.7	0.88	10.7	1.8	5.7	2.6	68	80	1LE1002-1CA0■-■■■■	35	0.013
7.5	8.6	132 S	2925	24	86.0	86.7	86.1	0.88	14.3	2.2	6.8	3.1	68	80	1LE1002-1CA1■-■■■■	40	0.016
11	12.6	160 M	2925	36	87.6	88.0	87.1	0.86	21.0	2.0	5.7	2.7	70	82	1LE1002-1DA2■-■■■■	60	0.030
15	17.3	160 M	2935	49	88.7	88.9	87.7	0.85	28.5	2.4	6.8	3.2	70	82	1LE1002-1DA3■-■■■■	68	0.036
18.5	21.3	160 L	2935	60	89.3	89.7	89.3	0.87	34.5	2.7	7.6	3.4	70	82	1LE1002-1DA4■-■■■■	78	0.044
22	24.5	180 M	2945	71	89.9	90.6	90.4	0.87	40.5	2.5	7.7	3.5	72	85	1LE1002-1EA2■-■■■■	112	0.069
30	33.5	200 L	2960	97	90.7	90.9	90.2	0.79	60	2.5	7.3	3.6	72	85	1LE1002-2AA4■-■■■■	149	0.124
37	41.5	200 L	2955	120	91.2	91.6	91.2	0.88	67	2.7	8.2	3.5	72	85	1LE1002-2AA5■-■■■■	169	0.15

Voltages		Version			Order code
50 Hz 230 VΔ/400 VY	60 Hz [1] 460 VY	**Standard**	2	2	–
50 Hz 400 VΔ/690 VY	60 Hz [1] 460 VΔ	**Standard**	3	4	–
50 Hz 500 VY		Without additional charge	2	7	–
50 Hz 500 VΔ		Without additional charge	4	0	–
For other voltages [1] and more information, see from page 2/85			9	0	. . .

Types of construction		Version			Order code
Without flange	IM B3 [2]	**Standard**		A	–
With flange	IM B5 [2]	With additional charge		F	–
With flange	IM B14 [2]	With additional charge		K	–
For other types of construction and more information, see from page 2/90				■	. . .

Motor protection	Version			Order code
Without	**Standard**		A	–
PTC thermistor with 1 or 3 temperature sensors (frame sizes 63 to 90 or 100 to 200)	With additional charge		B	–
For other motor protection and more information, see from page 2/98			■	. . .

Terminal box position	Version		
Terminal box at top	**Standard**		4
For other terminal box positions and more information, see from page 2/100			■

Special versions		Order code(s)
Forced-air cooled motors w/o ext. fan/fan cover (IC 418)	1LE1002-. . . . ■-■■■■-Z	F90 +. . .+. . .+. . .
For options, see from page 2/102	1LE1002-. . . . ■-■■■■-Z	. . .+. . .+. . .+. . .

[1] Operating values at rated power for 60 Hz are stored in the Drive Technology Configurator (DT Configurator; see Appendix, "Tools and engineering").

[2] Types derived from IM B3 (IM B6/7/8, IM V6, and IM V5), from IM B5 (IM V3 and IM V1) and from IM B14 (IM V19 and IM V18) are possible, provided that no requirements exist for condensation drainage holes (**H03**) or stamping of the type on the rating plate. The basic type IM B3, IM B5 or IM B14 is stamped as standard on the rating plate. For orders with condensation drainage holes (**H03**), the type must be specified.

© Siemens AG 2018

Please note minimum legal efficiencies in the European Economic Area!

IE1

Selection and ordering data

P_{rated}, 50 Hz/ P50	P_{rated}, 60 Hz/ P60 [1]	Frame size	Operating values at rated power: n_{rated}, 50 Hz	T_{rated}, 50 Hz	η_{rated}, 50 Hz, 4/4	η_{rated}, 50 Hz, 3/4	η_{rated}, 50 Hz, 2/4	cos-φ_{rated}, 50 Hz, 4/4	I_{rated}, 50 Hz, 400 V	T_{LR}/T_{rated}, 50 Hz	I_{LR}/I_{rated}, 50 Hz	T_B/T_{rated}, 50 Hz	L_{pfA}, 50 Hz	L_{WA}, 50 Hz	Aluminum series 1LE1002 Article No.	$m_{IM\ B3}$	J
kW	kW	FS	rpm	Nm	%	%	%		A				dB(A)	dB(A)	▲ New	kg	kgm²
• Cooling: Self-ventilated (IC 411) or with order code F90 forced-air cooled without external fan and fan cover (IC 418) • Efficiency according to IEC 60034-30: IE1 Standard Efficiency, service factor (SF) 1.1 • Insulation: Thermal class 155 (temperature class F), IP55 degree of protection, utilization in accordance with thermal class 130 (temperature class B)																	
4-pole: 1500 rpm at 50 Hz, 1800 rpm at 60 Hz [1]																	
0.12	**0.14**	**63 M**	1385	3.8	70.0	70.7	67.7	0.79	1.44	2.1	3.7	2.2	59	66	▲ **1LE1002-0BB2■-■■■■**	4	0.00029
0.18	**0.21**	**63 M**	1385	5.2	72.1	72.0	67.0	0.76	1.85	2.1	3.6	2.3	59	66	▲ **1LE1002-0BB3■-■■■■**	4	0.00037
0.25	**0.29**	**71 M**	1365	1.8	61.5	61.4	56.1	0.73	0.80	1.8	3.0	2.0	54	65	▲ **1LE1002-0CB2■-■■■■**	5	0.00052
0.37	**0.43**	**71 M**	1350	2.7	66.0	67.7	65.0	0.75	1.08	2.0	3.2	2.0	54	65	▲ **1LE1002-0CB3■-■■■■**	6	0.00077
0.55	**0.63**	**80 M**	1385	3.8	70.0	70.7	67.7	0.79	1.44	2.1	3.7	2.2	59	66	**1LE1002-0DB2■-■■■■**	9	0.0014
0.75	**0.86**	**80 M**	1385	5.2	72.1	72.0	67.0	0.76	1.85	2.1	3.6	2.3	59	66	**1LE1002-0DB3■-■■■■**	11	0.0017
1.1	**1.27**	**90 S**	1405	7.5	75.0	75.9	73.6	0.81	2.5	2.1	4.5	2.3	61	68	**1LE1002-0EB0■-■■■■**	12	0.0024
1.5	**1.75**	**90 L**	1410	10	77.2	77.8	75.1	0.80	3.35	2.4	4.7	2.6	61	68	**1LE1002-0EB4■-■■■■**	15	0.0033
2.2	**2.55**	**100 L**	1425	15	79.7	80.5	78.5	0.81	4.9	2.2	5.1	2.3	60	72	**1LE1002-1AB4■-■■■■**	18	0.0059
3	**3.45**	**100 L**	1425	20	81.5	83.0	82.3	0.85	6.3	2.4	5.4	2.6	60	72	**1LE1002-1AB5■-■■■■**	22	0.0078
4	**4.55**	**112 M**	1435	27	83.1	84.3	83.7	0.83	8.4	2.5	6.1	2.9	58	70	**1LE1002-1BB2■-■■■■**	27	0.010
5.5	**6.3**	**132 S**	1450	36	84.7	85.7	84.9	0.82	11.2	2.3	5.7	2.7	64	76	**1LE1002-1CB0■-■■■■**	38	0.019
7.5	**8.6**	**132 M**	1450	49	86.0	86.9	86.3	0.82	15.2	2.6	6.6	3.1	64	76	**1LE1002-1CB2■-■■■■**	44	0.024
11	**12.6**	**160 M**	1460	72	87.6	87.9	86.7	0.81	22.5	2.7	6.9	3.3	65	77	**1LE1002-1DB2■-■■■■**	62	0.044
15	**17.3**	**160 L**	1460	98	88.7	89.1	88.0	0.82	30.0	3.0	7.5	3.6	65	77	**1LE1002-1DB4■-■■■■**	73	0.056
18.5	**21.3**	**180 M**	1468	120	89.3	90.2	90.2	0.85	35	2.2	7.3	3.1	63	76	**1LE1002-1EB2■-■■■■**	131	0.13
22	**25.3**	**180 L**	1465	143	89.9	90.8	90.7	0.83	42.5	2.7	8	3.6	63	76	**1LE1002-1EB4■-■■■■**	132	0.13
30	**34.5**	**200 L**	1472	195	90.7	91.5	91.4	0.83	58	2.3	6.9	3.1	64	78	**1LE1002-2AB5■-■■■■**	169	0.2

Voltages		Version				Order code
50 Hz 230 VΔ/400 VY	60 Hz [1] 460 VY	**Standard**	**2**	**2**		–
50 Hz 400 VΔ/690 VY	60 Hz [1] 460 VΔ	**Standard**	**3**	**4**		–
50 Hz 500 VY		Without additional charge	**2**	**7**		–
50 Hz 500 VΔ		Without additional charge	**4**	**0**		–
For other voltages [1] and more information, see from page 2/85			**9**	**0**		. . .
Types of construction		Version				Order code
Without flange	IM B3 [2]	**Standard**			**A**	–
With flange	IM B5 [2]	With additional charge			**F**	–
With flange	IM B14 [2]	With additional charge			**K**	–
For other types of construction and more information, see from page 2/90					■	. . .
Motor protection		Version				Order code
Without		**Standard**				**A** –
PTC thermistor with 1 or 3 temperature sensors (frame sizes 63 to 90 or 100 to 200)		With additional charge				**B** –
For other motor protection and more information, see from page 2/98						■ . . .
Terminal box position		Version				
Terminal box at top		**Standard**				**4**
For other terminal box positions and more information, see from page 2/100						■
Special versions						Order code(s)
Forced-air cooled motors w/o ext. fan/fan cover (IC 418)						**1LE1002-. . . . ■-■■■■-Z** **F90** +. . .+. . .+. . .
For options, see from page 2/102						**1LE1002-. . . . ■-■■■■-Z** . . .+. . .+. . .+. . .

[1] Operating values at rated power for 60 Hz are stored in the Drive Technology Configurator (DT Configurator; see Appendix, "Tools and engineering").

[2] Types derived from IM B3 (IM B6/7/8, IM V6, and IM V5), from IM B5 (IM V3 and IM V1) and from IM B14 (IM V19 and IM V18) are possible, provided that no requirements exist for condensation drainage holes (**H03**) or stamping of the type on the rating plate. The basic type IM B3, IM B5 or IM B14 is stamped as standard on the rating plate. For orders with condensation drainage holes (**H03**), the type must be specified.

© Siemens AG 2018

2

Selection and ordering data

P_{rated}, 50 Hz/ P50	P_{rated}, 60 Hz/ P60 [1]	Frame size	Operating values at rated power: n_{rated}, 50 Hz	T_{rated}, 50 Hz	η_{rated}, 50 Hz, 4/4	η_{rated}, 50 Hz, 3/4	η_{rated}, 50 Hz, 2/4	cos-φ_{rated}, 50 Hz, 4/4	I_{rated}, 50 Hz, 400 V	T_{LR}/T_{rated}, 50 Hz	I_{LR}/I_{rated}, 50 Hz	T_B/T_{rated}, 50 Hz	L_{pfA}, 50 Hz	L_{WA}, 50 Hz	Aluminum series 1LE1002 Article No.	$m_{IM\ B3}$	J
kW	kW	FS	rpm	Nm	%	%	%		A				dB(A)	dB(A)	▲ New	kg	kgm²
• Cooling: Self-ventilated (IC 411) or with order code F90 forced-air cooled without external fan and fan cover (IC 418)																	
• Efficiency according to IEC 60034-30: IE1 Standard Efficiency, service factor (SF) 1.1																	
• Insulation: Thermal class 155 (temperature class F), IP55 degree of protection, utilization in accordance with thermal class 130 (temperature class B)																	
6-pole: 1000 rpm at 50 Hz, 1200 rpm at 60 Hz [1]																	
0.09	0.11	63 M	915	3.9	57.9	56.9	51.1	0.70	1.23	1.6	2.7	1.8	56	64	▲ 1LE1002-0BC2■-■■■■	4	0.00037
0.18	0.21	71 M	800	2.2	45.5	44.4	38.3	0.67	0.84	1.9	2.0	2.0	51	62	▲ 1LE1002-0CC2■-■■■■	5	0.00055
0.25	0.29	71 M	860	2.8	52.1	52.8	48.4	0.71	0.98	2.0	2.2	2.0	51	62	▲ 1LE1002-0CC3■-■■■■	6	0.00080
0.37	0.43	80 M	915	3.9	57.9	56.9	51.1	0.70	1.23	1.6	2.7	1.8	56	64	1LE1002-0DC2■-■■■■	9	0.0014
0.55	0.63	80 M	900	5.8	65.8	66.6	62.6	0.72	1.68	1.7	2.7	1.9	56	64	1LE1002-0DC3■-■■■■	12	0.0017
0.75	0.86	90 S	940	7.6	70.0	70.0	66.0	0.67	2.30	2.0	3.8	2.2	59	70	1LE1002-0EC0■-■■■■	13	0.0033
1.1	1.27	90 L	925	11	72.9	73.8	71.2	0.69	3.15	2.2	3.8	2.4	59	70	1LE1002-0EC4■-■■■■	15	0.004
1.5	1.75	100 L	940	15	75.2	76.0	72.4	0.74	3.9	2.0	4.0	2.2	59	71	1LE1002-1AC4■-■■■■	19	0.0065
2.2	2.55	112 M	940	22	77.7	78.5	76.3	0.72	5.7	2.6	4.6	2.7	57	69	1LE1002-1BC2■-■■■■	25	0.0092
3	3.45	132 S	955	30	79.7	80.2	77.7	0.74	7.3	2.0	4.6	2.6	63	75	1LE1002-1CC0■-■■■■	34	0.017
4	4.55	132 M	955	40	81.4	82.6	81.9	0.76	9.3	2.3	5.2	2.6	63	75	1LE1002-1CC2■-■■■■	39	0.021
5.5	6.3	132 M	955	55	83.1	84.0	83.0	0.75	12.7	2.7	5.7	3.0	63	75	1LE1002-1CC3■-■■■■	48	0.027
7.5	8.6	160 M	970	74	84.7	85.4	85.0	0.73	17.5	2.1	5.5	2.9	67	79	1LE1002-1DC2■-■■■■	72	0.056
11	12.6	160 L	965	109	86.4	86.4	85.4	0.77	24	1.9	5.9	2.7	67	79	1LE1002-1DC4■-■■■■	92	0.078
15	18	180 L	975	147	87.7	88.5	87.9	0.77	32	2.3	6.1	3	56	69	1LE1002-1EC4■-■■■■	119	0.17
18.5	22	200 L	980	214	89.2	90	89.6	0.79	45	2.8	6.8	2.9	59	72	1LE1002-2AC4■-■■■■	149	0.25
22	26.5	200 L	980	214	89.2	90	89.6	0.79	45	2.8	6.8	2.9	59	72	1LE1002-2AC5■-■■■■	166	0.3
8-pole: 750 rpm at 50 Hz, 900 rpm at 60 Hz [1]																	
0.09	0.11	71 M	925	11	72.9	73.8	71.2	0.69	3.15	2.2	3.8	2.4	59	70	▲ 1LE1002-0CD2■-■■■■	6	0.00080
0.12	0.14	71 M	925	11	72.9	73.8	71.2	0.69	3.15	2.2	3.8	2.4	59	70	▲ 1LE1002-0CD3■-■■■■	6	0.00080
0.75	0.86	100 L	705	10	61.2	58.1	50.5	0.62	2.85	1.9	3	2.2	60	72	1LE1002-1AD4■-■■■■	17	0.0056
1.1	1.27	100 L	690	15	66.5	66.0	61.8	0.61	3.90	2.0	3.2	2.3	60	72	1LE1002-1AD5■-■■■■	22	0.0078
1.5	1.75	112 M	700	20	70.2	71.1	68.7	0.66	4.65	1.9	3.5	2.1	63	75	1LE1002-1BD2■-■■■■	29	0.0094
2.2	2.55	132 S	715	29	74.2	74.1	71.4	0.66	6.5	1.7	3.9	2.4	63	75	1LE1002-1CD0■-■■■■	37	0.019
3	3.45	132 M	715	40	77.0	77.4	75.2	0.68	8.3	1.8	3.9	2.2	63	75	1LE1002-1CD2■-■■■■	44	0.024
4	4.55	160 M	720	53	79.2	79.3	76.3	0.67	10.9	1.6	4.1	2.3	63	75	1LE1002-1DD2■-■■■■	60	0.044
5.5	6.3	160 M	720	73	81.4	81.9	80.3	0.68	14.3	1.6	4	2.2	63	75	1LE1002-1DD3■-■■■■	72	0.056
7.5	8.6	160 L	715	100	83.1	83.7	82.4	0.69	18.9	1.7	3.8	2.2	63	75	1LE1002-1DD4■-■■■■	91	0.077
11	13.2	180 L	720	146	85	86.2	86	0.7	26.5	1.9	5	2.5	65	78	1LE1002-1ED4■-■■■■	122	0.2
15	18	200 L	718	199	86.2	87.9	88.4	0.75	33.5	2.5	5.5	2.9	55	69	1LE1002-2AD5■-■■■■	170	0.3

Voltages		Version					Order code
50 Hz 230 VΔ/400 VY	60 Hz [1] 460 VY	**Standard**	2	2			–
50 Hz 400 VΔ/690 VY	60 Hz [1] 460 VΔ	**Standard**	3	4			–
50 Hz 500 VY		Without additional charge	2	7			–
50 Hz 500 VΔ		Without additional charge	4	0			–
For other voltages [1] and more information, see from page 2/85			9	0			. . .
Types of construction		Version					Order code
Without flange	IM B3 [2]	**Standard**			A		–
With flange	IM B5 [2]	With additional charge			F		–
With flange	IM B14 [2]	With additional charge			K		–
For other types of construction and more information, see from page 2/90					■		. . .
Motor protection		Version					Order code
Without		**Standard**				A	–
PTC thermistor with 1 or 3 temperature sensors (frame sizes 63 to 90 or 100 to 200)		With additional charge				B	–
For other motor protection and more information, see from page 2/98						■	. . .
Terminal box position		Version					
Terminal box at top		**Standard**					4
For other terminal box positions and more information, see from page 2/100							■
Special versions							Order code(s)
Forced-air cooled motors w/o ext. fan/fan cover (IC 418)		1LE1002-. . . . ■-■■■■-Z					F90 +. . .+. . .+. . .
For options, see from page 2/102		1LE1002-. . . . ■-■■■■-Z					. . .+. . .+. . .+. . .

[1] Operating values at rated power for 60 Hz are stored in the Drive Technology Configurator (DT Configurator; see Appendix, "Tools and engineering").

[2] Types derived from IM B3 (IM B6/7/8, IM V6, and IM V5), from IM B5 (IM V3 and IM V1) and from IM B14 (IM V19 and IM V18) are possible, provided that no requirements exist for condensation drainage holes (**H03**) or stamping of the type on the rating plate. The basic type IM B3, IM B5 or IM B14 is stamped as standard on the rating plate. For orders with condensation drainage holes (**H03**), the type must be specified.

© Siemens AG 2018

IE1

Selection and ordering data

P_{rated}, 50 Hz/ P50	P_{rated}, 60 Hz/ P60 [1]	Frame size	Operating values at rated power: n_{rated}, 50 Hz	T_{rated}, 50 Hz	η_{rated}, 50 Hz, 4/4	η_{rated}, 50 Hz, 3/4	η_{rated}, 50 Hz, 2/4	cos-φ_{rated}, 50 Hz, 4/4	I_{rated}, 50 Hz, 400 V	T_{LR}/T_{rated}, 50 Hz	I_{LR}/I_{rated}, 50 Hz	T_B/T_{rated}, 50 Hz	L_{pfA}, 50 Hz	L_{WA}, 50 Hz	Aluminum series 1LE1002 Article No.	$m_{IM\ B3}$	J
kW	kW	FS	rpm	Nm	%	%	%		A				dB(A)	dB(A)	▲ New	kg	kgm²
• Cooling: Self-ventilated (IC 411) or with order code F90 forced-air cooled without external fan and fan cover (IC 418) • Efficiency according to IEC 60034-30: IE1 Standard Efficiency, (SF) 1.1 • Insulation: Thermal class 155 (temperature class F), IP55 degree of protection, utilization in accordance with thermal class 130 (temperature class B)																	
2-pole: 3000 rpm at 50 Hz, 3600 rpm at 60 Hz [1]																	
0.37	**0.43**	**63 M**	2835	2.5	72.1	72.6	69.9	0.86	1.75	2.1	5.2	2.3	64	71	▲ **1LE1002-0BA6■-■■■■**	5	0.00018
0.75	**0.86**	**71 M**	2755	1.3	63.9	64.5	61.1	0.79	1.06	2.2	3.4	2.2	62	73	▲ **1LE1002-0CA6■-■■■■**	5	0.00029
4	**4.55**	**100 L**	2850	13	83.1	83.9	83	0.85	8.2	4.5	7	4.1	67	79	**1LE1002-1AA6■-■■■■**	25	0.0044
5.5	**6.3**	**112 M**	2935	18	84.7	84.7	82.7	0.86	10.9	2.9	7.5	3.8	69	81	**1LE1002-1BA6■-■■■■**	31	0.0085
11	**12.6**	**132 M**	2920	36	87.6	88.3	87.8	0.9	20	2.8	7.5	3.7	68	80	**1LE1002-1CA6■-■■■■**	53	0.022
22	**24.5**	**160 L**	2935	72	89.9	90.2	89.5	0.9	39	2.6	7.5	3.4	70	82	**1LE1002-1DA6■-■■■■**	85	0.049
4-pole: 1500 rpm at 50 Hz, 1800 rpm at 60 Hz [1]																	
0.25	**0.29**	**63 M**	1385	3.8	70.0	70.7	67.7	0.79	1.44	2.1	3.7	2.2	59	66	▲ **1LE1002-0BB6■-■■■■**	5	0.00029
0.55	**0.63**	**71 M**	1350	2.7	66.0	67.7	65.0	0.75	1.08	2.0	3.2	2.0	54	65	▲ **1LE1002-0CB6■-■■■■**	7	0.00077
4	**4.55**	**100 L**	1435	27	83.1	83.8	82.3	0.81	8.6	2.9	5.8	3.1	60	72	**1LE1002-1AB6■-■■■■**	27	0.010
5.5	**6.3**	**112 M**	1420	37	84.7	85.9	85.3	0.81	11.6	3	5.8	3.1	58	70	**1LE1002-1BB6■-■■■■**	33	0.012
11	**12.6**	**132 M**	1450	72	87.6	88.2	87.6	0.84	21.5	2.5	7.2	3	64	76	**1LE1002-1CB6■-■■■■**	58	0.033
18.5	**21.3**	**160 L**	1460	121	89.3	89.8	89.2	0.85	35	2.7	7.2	3.2	65	77	**1LE1002-1DB6■-■■■■**	85	0.068
6-pole: 1000 rpm at 50 Hz, 1200 rpm at 60 Hz [1]																	
2.2	**2.55**	**100 L**	930	23	77.7	79.5	78.1	0.78	5.2	2	4	2.2	59	71	**1LE1002-1AC6■-■■■■**	24	0.0084
3	**3.45**	**112 M**	945	30	79.7	79.5	76.3	0.72	7.5	2.9	4.6	3	57	69	**1LE1002-1BC6■-■■■■**	32	0.013
7.5	**8.6**	**132 M**	950	75	84.7	85.3	84.1	0.74	17.3	2.4	5.3	3	63	75	**1LE1002-1CC6■-■■■■**	54	0.032
15	**17.3**	**160 L**	965	148	87.7	87.9	86.5	0.75	33	2.9	6	3.4	67	79	**1LE1002-1DC6■-■■■■**	109	0.094

Voltages		Version				Order code
50 Hz 230 VΔ/400 VY	60 Hz [1] 460 VY	**Standard**	**2**	**2**		–
50 Hz 400 VΔ/690 VY	60 Hz [1] 460 VΔ	**Standard**	**3**	**4**		–
50 Hz 500 VY		Without additional charge	**2**	**7**		–
50 Hz 500 VΔ		Without additional charge	**4**	**0**		–
For other voltages [1] and more information, see from page 2/85			**9**	**0**		. . .
Types of construction		Version				Order code
Without flange	IM B3 [2]	**Standard**			**A**	–
With flange	IM B5 [2]	With additional charge			**F**	–
With flange	IM B14 [2]	With additional charge			**K**	–
For other types of construction and more information, see from page 2/90					■	. . .
Motor protection		Version				Order code
Without		**Standard**				**A** –
PTC thermistor with 1 or 3 temperature sensors (frame sizes 63 to 90 or 100 to 200)		With additional charge				**B** –
For other motor protection and more information, see from page 2/98						■ . . .
Terminal box position		Version				
Terminal box at top		**Standard**				**4**
For other terminal box positions and more information, see from page 2/100						■
Special versions						Order code(s)
For options, see from page 2/102						**1LE1002-. . . . ■-■■■■-Z** . . .+. . .+. . .+. . .

[1] Operating values at rated power for 60 Hz are stored in the Drive Technology Configurator (DT Configurator; see Appendix, "Tools and engineering").

[2] Types derived from IM B3 (IM B6/7/8, IM V6, and IM V5), from IM B5 (IM V3 and IM V1) and from IM B14 (IM V19 and IM V18) are possible, provided that no requirements exist for condensation drainage holes (**H03**) or stamping of the type on the rating plate. The basic type IM B3, IM B5 or IM B14 is stamped as standard on the rating plate. For orders with condensation drainage holes (**H03**), the type must be specified.

© Siemens AG 2018

2

Selection and ordering data

P_{rated}, 50 Hz/ P50	P_{rated}, 60 Hz/ P60 [1]	Frame size	Operating values at rated power: n_{rated}, 50 Hz	T_{rated}, 50 Hz	η_{rated}, 50 Hz, 4/4	η_{rated}, 50 Hz, 3/4	η_{rated}, 50 Hz, 2/4	cos-φ_{rated}, 50 Hz, 4/4	I_{rated}, 50 Hz, 400 V	T_{LR}/T_{rated}, 50 Hz	I_{LR}/I_{rated}, 50 Hz	T_B/T_{rated}, 50 Hz	L_{pfA}, 50 Hz	L_{WA}, 50 Hz	Cast-iron series 1LE1502 – *Basic Line* Article No.	$m_{IM\ B3}$	J
kW	kW	FS	rpm	Nm	%	%	%		A				dB(A)	dB(A)		kg	kgm²
• Cooling: Self-ventilated (IC 411) or with order code F90 forced-air cooled without external fan and fan cover (IC 418) • Efficiency according to IEC 60034-30: IE1 Standard Efficiency, service factor (SF) 1.1 • Insulation: Thermal class 155 (temperature class F), IP55 degree of protection, utilization in accordance with thermal class 130 (temperature class B)																	
2-pole: 3000 rpm at 50 Hz, 3600 rpm at 60 Hz [1]																	
3	**3.45**	**100 L**	2835	10	81.5	83.2	82.8	0.87	6.1	3.2	6.4	3.5	66	80	**1LE1502-1AA4■-■■■■**	31	0.0034
4	**4.55**	**112 M**	2935	13	83.1	83.0	80.8	0.85	8.2	3.3	8.3	4.2	70	83	**1LE1502-1BA2■-■■■■**	36	0.0067
5.5	**6.3**	**132 S**	2910	18	84.7	85.9	85.7	0.88	10.7	1.8	5.7	2.6	68	82	**1LE1502-1CA0■-■■■■**	53	0.013
7.5	**8.6**	**132 S**	2925	24	86.0	86.7	86.1	0.88	14.3	2.2	6.8	3.1	68	82	**1LE1502-1CA1■-■■■■**	58	0.016
11	**12.6**	**160 M**	2925	36	87.6	88.0	87.1	0.86	21.0	2.0	5.7	2.7	73	86	**1LE1502-1DA2■-■■■■**	87	0.030
15	**18**	**160 M**	2935	49	88.7	88.9	87.7	0.85	28.5	2.4	6.8	3.2	73	86	**1LE1502-1DA3■-■■■■**	95	0.036
18.5	**22**	**160 L**	2935	60	89.3	89.7	89.3	0.87	34.5	2.7	7.6	3.4	73	86	**1LE1502-1DA4■-■■■■**	105	0.044
22	**24.5**	**180 M**	2945	71	89.9	90.6	90.4	0.87	40.5	2.5	7.7	3.5	72	85	**1LE1502-1EA2■-■■■■**	150	0.069
30	**33.5**	**200 L**	2960	97	90.7	90.9	90.2	0.79	60	2.5	7.3	3.6	72	85	**1LE1502-2AA4■-■■■■**	195	0.124
37	**41.5**	**200 L**	2955	120	91.2	91.6	91.2	0.88	67	2.7	8.2	3.5	72	85	**1LE1502-2AA5■-■■■■**	230	0.15
45	**51**	**225 M**	2960	145	91.7	92	91.6	0.88	80	2.3	6.7	3	73	86	**1LE1502-2BA2■-■■■■**	280	0.22
55	**62**	**250 M**	2970	177	92.1	92.3	91.4	0.88	98	2	6.7	2.9	77	91	**1LE1502-2CA2■-■■■■**	360	0.4
75	**84**	**280 S**	2975	241	92.7	92.5	91.3	0.86	136	2.2	6.8	3	78	92	**1LE1502-2DA0■-■■■■**	470	0.72
90	**101**	**280 M**	2975	289	93	93.1	92.4	0.88	159	2.5	7.1	3.1	76	89	**1LE1502-2DA2■-■■■■**	530	0.83
110	**123**	**315 S**	2982	352	93.3	92.9	91.5	0.86	198	2.3	7.5	3.3	80	94	**1LE1502-3AA0■-■■■■**	680	1.2
132	**148**	**315 M**	2982	423	93.5	93.2	92.5	0.89	230	2.3	7.6	3	80	94	**1LE1502-3AA2■-■■■■**	740	1.4
160	**180**	**315 L**	2982	512	93.8	93.6	93.1	0.91	270	2.3	7.4	2.9	80	94	**1LE1502-3AA4■-■■■■**	880	1.6
200	**224**	**315 L**	2982	640	94	93.9	93.5	0.92	335	2.2	7.1	2.8	80	94	**1LE1502-3AA5■-■■■■**	1000	2.1

Voltages [2]		Version					Order code
50 Hz 230 VΔ/400 VY	60 Hz [1] 460 VY	**Standard**	2	2			–
50 Hz 400 VΔ/690 VY	60 Hz [1] 460 VΔ	**Standard**	3	4			–
50 Hz 500 VY		Without additional charge	2	7			–
50 Hz 500 VΔ		Without additional charge	4	0			–
For other voltages [1] and more information, see from page 2/88			9	0			. . .
Types of construction		Version					Order code
Without flange	IM B3 [3]	**Standard**			A		–
With flange	IM B5 [3]	With additional charge			F		–
With flange	IM B14 [3]	With additional charge			K		–
For other types of construction and more information, see from page 2/94					■		. . .
Motor protection		Version					Order code
Without		**Standard**				A	–
PTC thermistor with 3 temperature sensors		With additional charge				B	–
For other motor protection and more information, see from page 2/99						■	. . .
Terminal box position		Version					
Terminal box at top		**Standard**					4
For other terminal box positions and more information, see from page 2/101							■
Special versions							Order code(s)
Forced-air cooled motors w/o ext. fan/fan cover (IC 418)							**1LE1502-. . . . ■-■■■■-Z** F90 +. . .+. . .+. . .
For options, see from page 2/109							**1LE1502-. . . . ■-■■■■-Z** . . .+. . .+. . .+. . .

1) Operating values at rated power for 60 Hz are stored in the Drive Technology Configurator (DT Configurator; see Appendix, "Tools and engineering").

2) Parallel supply lines are required in the case of connection to ≤ 240 V. For frame size 315 with connection to ≤ 240 V, due to the high current, a drilled, removable entry plate (order code **R52**) or a larger terminal box (order code **R50**) can be used. Order codes **R52** and **R50** alter the motor dimensions.

3) Types derived from IM B3 (IM B6/7/8, IM V6 and IM V5), from IM B5 (IM V3 and IM V1) and from IM B14 (IM V19 and IM V18) are possible, provided that no requirement exists for stamping of the type on the rating plate. The basic type IM B3, IM B5 or IM B14 is stamped as standard on the rating plate. If mounted in a different position, the position must be specified to ensure that the condensation drainage holes are positioned correctly.

© Siemens AG 2018

Please note minimum legal efficiencies in the European Economic Area!

IE1

Selection and ordering data

P_{rated}, 50 Hz/ P50	P_{rated}, 60 Hz/ P60 [1]	Frame size	Operating values at rated power: n_{rated}, 50 Hz	T_{rated}, 50 Hz	η_{rated}, 50 Hz, 4/4	η_{rated}, 50 Hz, 3/4	η_{rated}, 50 Hz, 2/4	cos-φ_{rated}, 50 Hz, 4/4	I_{rated}, 50 Hz, 400 V	T_{LR}/T_{rated}, 50 Hz	I_{LR}/I_{rated}, 50 Hz	T_B/T_{rated}, 50 Hz	L_{pfA}, 50 Hz	L_{WA}, 50 Hz	Cast-iron series 1LE1502 – *Basic Line* *Article No.*	$m_{IM\ B3}$	J
kW	kW	FS	rpm	Nm	%	%	%		A				dB(A)	dB(A)		kg	kgm²
• Cooling: Self-ventilated (IC 411) or with order code F90 forced-air cooled without external fan and fan cover (IC 418) • Efficiency according to IEC 60034-30: IE1 Standard Efficiency, service factor (SF) 1.1 • Insulation: Thermal class 155 (temperature class F), IP55 degree of protection, utilization in accordance with thermal class 130 (temperature class B)																	
4-pole: 1500 rpm at 50 Hz, 1800 rpm at 60 Hz [1]																	
2.2	**2.55**	**100 L**	1425	15	79.7	80.3	78.1	0.81	4.9	2.3	5.1	2.7	60	72	**1LE1502-1AB4■-■■■■**	29	0.0059
3	**3.45**	**100 L**	1425	20	81.5	82.6	81.5	0.85	6.3	2.4	5.4	2.6	60	72	**1LE1502-1AB5■-■■■■**	33	0.0078
4	**4.55**	**112 M**	1435	27	83.1	84.3	83.7	0.83	8.4	2.5	6.1	2.9	57	70	**1LE1502-1BB2■-■■■■**	38	0.010
5.5	**56.3**	**132 S**	1450	36	84.7	85.3	84.2	0.82	11.4	2.3	5.7	2.7	64	76	**1LE1502-1CB0■-■■■■**	56	0.019
7.5	**8.6**	**132 M**	1450	49	86.0	86.5	85.4	0.82	15.4	2.6	6.6	3.1	64	76	**1LE1502-1CB2■-■■■■**	59	0.024
11	**12.6**	**160 M**	1460	72	87.6	87.9	86.7	0.81	22.5	2.7	6.9	3.3	70	82	**1LE1502-1DB2■-■■■■**	89	0.044
15	**17.3**	**160 L**	1460	98	88.7	89.1	88.0	0.82	30.0	3.0	7.5	3.6	70	82	**1LE1502-1DB4■-■■■■**	105	0.056
18.5	**21.3**	**180 M**	1468	120	89.3	90.2	90.2	0.85	35	2.2	7.3	3.1	63	76	**1LE1502-1EB2■-■■■■**	170	0.13
22	**25.3**	**180 L**	1465	143	89.9	90.8	90.7	0.83	42.5	2.7	8	3.6	63	76	**1LE1502-1EB4■-■■■■**	170	0.13
30	**34.5**	**200 L**	1472	195	90.7	91.5	91.4	0.83	58	2.3	6.9	3.1	64	78	**1LE1502-2AB5■-■■■■**	220	0.2
37	**42.5**	**225 S**	1475	240	91.2	91.6	91.1	0.85	69	2.3	7	3.2	69	83	**1LE1502-2BB0■-■■■■**	260	0.37
45	**52**	**225 M**	1475	291	91.7	92.1	91.7	0.86	82	2.6	7.2	3.2	69	82	**1LE1502-2BB2■-■■■■**	290	0.45
55	**63**	**250 M**	1475	356	92.1	92.5	92.1	0.85	101	2.4	6.1	2.6	69	83	**1LE1502-2CB2■-■■■■**	370	0.69
75	**86**	**280 S**	1485	482	92.7	92.9	92.2	0.85	137	2.3	7	2.8	75	89	**1LE1502-2DB0■-■■■■**	500	1.2
90	**104**	**280 M**	1482	580	93	93.4	93.1	0.87	161	2.2	6.5	2.8	73	87	**1LE1502-2DB2■-■■■■**	560	1.4
110	**127**	**315 S**	1488	706	93.3	93.4	92.8	0.84	205	2.3	6.5	2.7	76	90	**1LE1502-3AB0■-■■■■**	690	1.9
132	**152**	**315 M**	1488	847	93.5	93.7	93.3	0.85	240	2.5	6.8	2.7	76	91	**1LE1502-3AB2■-■■■■**	760	2.2
160	**184**	**315 L**	1486	1028	93.8	93.9	93.5	0.86	285	2.7	7.2	2.7	76	90	**1LE1502-3AB4■-■■■■**	940	2.9
200	**230**	**315 L**	1486	1285	94	94.2	94	0.87	355	2.5	6.9	2.7	76	91	**1LE1502-3AB5■-■■■■**	1140	3.5

Voltages [2]		Version				Order code
50 Hz 230 VΔ/400 VY	60 Hz [1] 460 VY	**Standard**	**2**	**2**		–
50 Hz 400 VΔ/690 VY	60 Hz [1] 460 VΔ	**Standard**	**3**	**4**		–
50 Hz 500 VY		Without additional charge	**2**	**7**		–
50 Hz 500 VΔ		Without additional charge	**4**	**0**		–
For other voltages [1] and more information, see from page 2/88			**9**	**0**		. . .
Types of construction		Version				Order code
Without flange	IM B3 [3]	**Standard**			**A**	–
With flange	IM B5 [3]	With additional charge			**F**	–
With flange	IM B14 [3]	With additional charge			**K**	–
For other types of construction and more information, see from page 2/94					■	. . .
Motor protection		Version				Order code
Without		**Standard**				–
PTC thermistor with 3 temperature sensors		With additional charge				–
For other motor protection and more information, see from page 2/99						. . .
Terminal box position		Version				
Terminal box at top		**Standard**				**4**
For other terminal box positions and more information, see from page 2/101						■
Special versions						Order code(s)
Forced-air cooled motors w/o ext. fan/fan cover (IC 418)						**1LE1502-. . . . ■-■■■■-Z** **F90 +. . .+. . .+. . .**
For options, see from page 2/109						**1LE1502-. . . . ■-■■■■-Z** . . .+. . .+. . .+. . .

[1] Operating values at rated power for 60 Hz are stored in the Drive Technology Configurator (DT Configurator; see Appendix, "Tools and engineering").

[2] Parallel supply lines are required in the case of connection to ≤ 240 V. For frame size 315 with connection to ≤ 240 V, due to the high current, a drilled, removable entry plate (order code **R52**) or a larger terminal box (order code **R50**) can be used. Order codes **R52** and **R50** alter the motor dimensions.

[3] Types derived from IM B3 (IM B6/7/8, IM V6 and IM V5), from IM B5 (IM V3 and IM V1) and from IM B14 (IM V19 and IM V18) are possible, provided that no requirement exists for stamping of the type on the rating plate. The basic type IM B3, IM B5 or IM B14 is stamped as standard on the rating plate. If mounted in a different position, the position must be specified to ensure that the condensation drainage holes are positioned correctly.

© Siemens AG 2018

2

Selection and ordering data

P_{rated}, 50 Hz/ P50	P_{rated}, 60 Hz/ P60 [1]	Frame size	Operating values at rated power: n_{rated}, 50 Hz	T_{rated}, 50 Hz	η_{rated}, 50 Hz, 4/4	η_{rated}, 50 Hz, 3/4	η_{rated}, 50 Hz, 2/4	cos-φ_{rated}, 50 Hz, 4/4	I_{rated}, 50 Hz, 400 V	T_{LR}/T_{rated}, 50 Hz	I_{LR}/I_{rated}, 50 Hz	T_B/T_{rated}, 50 Hz	L_{pfA}, 50 Hz	L_{WA}, 50 Hz	Cast-iron series 1LE1502 – *Basic Line* Article No.	$m_{IM\ B3}$	J
kW	kW	FS	rpm	Nm	%	%	%		A				dB(A)	dB(A)		kg	kgm²
• Cooling: Self-ventilated (IC 411) or with order code F90 forced-air cooled without external fan and fan cover (IC 418) • Efficiency according to IEC 60034-30: IE1 Standard Efficiency, service factor (SF) 1.1 • Insulation: Thermal class 155 (temperature class F), IP55 degree of protection, utilization in accordance with thermal class 130 (temperature class B)																	
6-pole: 1000 rpm at 50 Hz, 1200 rpm at 60 Hz [1]																	
1.5	1.75	100 L	940	15	75.2	75.6	72.3	0.74	3.9	2	4	2.2	59	71	1LE1502-1AC4■-■■■■	30	0.0065
2.2	2.55	112 M	940	22	77.7	78.5	76.3	0.72	5.7	2.6	4.6	2.7	59	71	1LE1502-1BC2■-■■■■	37	0.0092
3	3.45	132 S	955	30	79.7	79.9	77.1	0.74	7.3	2	4.6	2.6	65	78	1LE1502-1CC0■-■■■■	52	0.017
4	4.55	132 M	955	40	81.4	82.6	81.9	0.76	9.3	2.3	5.2	2.6	65	78	1LE1502-1CC2■-■■■■	57	0.021
5.5	6.3	132 M	955	55	83.1	84.0	83.0	0.75	12.7	2.7	5.7	3.0	65	78	1LE1502-1CC3■-■■■■	66	0.027
7.5	8.6	160 M	970	74	84.7	85.4	85.0	0.73	17.5	2.1	5.5	2.9	67	79	1LE1502-1DC2■-■■■■	100	0.056
11	12.6	160 L	965	109	86.4	86.8	85.9	0.77	24	1.9	5.9	2.7	67	79	1LE1502-1DC4■-■■■■	120	0.078
15	18	180 L	975	147	87.7	88.5	87.9	0.77	32	2.3	6.1	3	56	69	1LE1502-1EC4■-■■■■	155	0.17
18.5	22	200 L	978	181	88.6	89.8	89.8	0.79	38	2.5	6.3	2.6	59	72	1LE1502-2AC4■-■■■■	200	0.25
22	26.5	200 L	980	214	89.2	90	89.6	0.79	45	2.8	6.8	2.9	59	72	1LE1502-2AC5■-■■■■	220	0.3
30	36	225 M	978	293	90.2	91	90.7	0.82	59	2.7	6	2.5	65	77	1LE1502-2BC2■-■■■■	270	0.49
37	44.5	250 M	980	361	90.8	91.5	91.3	0.82	72	2.7	6	2.4	63	77	1LE1502-2CC2■-■■■■	330	0.76
45	54	280 S	986	436	91.4	92	91.6	0.84	85	2.6	7	2.6	63	77	1LE1502-2DC0■-■■■■	440	1.1
55	66	280 M	986	533	91.9	92.5	92.6	0.85	102	2.6	6.7	2.6	63	77	1LE1502-2DC2■-■■■■	500	1.3
75	90	315 S	988	725	92.6	92.8	92.1	0.83	141	2.5	7.1	2.7	62	77	1LE1502-3AC0■-■■■■	660	2.1
90	108	315 M	988	870	92.9	93.2	92.8	0.83	168	2.6	7.3	2.6	61	77	1LE1502-3AC2■-■■■■	740	2.5
110	132	315 L	988	1063	93.3	93.6	93.4	0.86	198	2.6	6.8	2.8	61	78	1LE1502-3AC4■-■■■■	880	3.2
132	158	315 L	988	1276	93.5	93.7	93.4	0.86	235	3	7.5	2.9	61	78	1LE1502-3AC5■-■■■■	1030	4
160	192	315 L	988	1546	93.8	93.9	93.6	0.86	285	3.1	7.7	3	64	79	1LE1502-3AC6■-■■■■	1160	4.7

Voltages [2]		Version				Order code
50 Hz 230 VΔ/400 VY	60 Hz [1] 460 VY	**Standard**	2	2		–
50 Hz 400 VΔ/690 VY	60 Hz [1] 460 VΔ	**Standard**	3	4		–
50 Hz 500 VY		Without additional charge	2	7		–
50 Hz 500 VΔ		Without additional charge	4	0		–
For other voltages [1] and more information, see from page 2/88			9	0		. . .
Types of construction		Version				Order code
Without flange	IM B3 [3]	**Standard**			A	–
With flange	IM B5 [3]	With additional charge			F	–
With flange	IM B14 [3]	With additional charge			K	–
For other types of construction and more information, see from page 2/94					■	. . .
Motor protection		Version				Order code
Without		**Standard**			A	–
PTC thermistor with 3 temperature sensors		With additional charge			B	–
For other motor protection and more information, see from page 2/99					■	. . .
Terminal box position		Version				
Terminal box at top		**Standard**			4	
For other terminal box positions and more information, see from page 2/101					■	

Special versions		Order code(s)
Forced-air cooled motors w/o ext. fan/fan cover (IC 418)	1LE1502-. . . . ■-■■■■ -Z	F90 +. . .+. . .+. . .
For options, see from page 2/109	1LE1502-. . . . ■-■■■■ -Z	. . .+. . .+. . .+. . .

1) Operating values at rated power for 60 Hz are stored in the Drive Technology Configurator (DT Configurator; see Appendix, "Tools and engineering").

2) Parallel supply lines are required in the case of connection to ≤ 240 V. For frame size 315 with connection to ≤ 240 V, due to the high current, a drilled, removable entry plate (order code **R52**) or a larger terminal box (order code **R50**) can be used. Order codes **R52** and **R50** alter the motor dimensions.

3) Types derived from IM B3 (IM B6/7/8, IM V6 and IM V5), from IM B5 (IM V3 and IM V1) and from IM B14 (IM V19 and IM V18) are possible, provided that no requirement exists for stamping of the type on the rating plate. The basic type IM B3, IM B5 or IM B14 is stamped as standard on the rating plate. If mounted in a different position, the position must be specified to ensure that the condensation drainage holes are positioned correctly.

© Siemens AG 2018

Please note minimum legal efficiencies in the European Economic Area!

IE1

Selection and ordering data

P_{rated}, 50 Hz/ P50	P_{rated}, 60 Hz/ P60 [1]	Frame size	Operating values at rated power: n_{rated}, 50 Hz	T_{rated}, 50 Hz	η_{rated}, 50 Hz, 4/4	η_{rated}, 50 Hz, 3/4	η_{rated}, 50 Hz, 2/4	cos-φ_{rated}, 50 Hz, 4/4	I_{rated}, 50 Hz, 400 V	T_{LR}/T_{rated}, 50 Hz	I_{LR}/I_{rated}, 50 Hz	T_B/T_{rated}, 50 Hz	L_{pfA}, 50 Hz	L_{WA}, 50 Hz	Cast-iron series 1LE1502 – *Basic Line* Article No.	$m_{IM\ B3}$	J
kW	kW	FS	rpm	Nm	%	%	%		A				dB(A)	dB(A)		kg	kgm²
• Cooling: Self-ventilated (IC 411) or with order code F90 forced-air cooled without external fan and fan cover (IC 418) • Efficiency according to IEC 60034-30: IE1 Standard Efficiency, service factor (SF) 1.1 • Insulation: Thermal class 155 (temperature class F), IP55 degree of protection, utilization in accordance with thermal class 130 (temperature class B)																	
8-pole: 750 rpm at 50 Hz, 900 rpm at 60 Hz [1]																	
0.75	0.86	100 L	705	10	61.2	58.1	50.5	0.62	2.85	1.9	3	2.2	64	72 [4]	1LE1502-1AD4■-■■■■	28	0.0056
1.1	1.27	100 L	690	15	66.5	66.0	61.8	0.61	3.90	2.0	3.2	2.3	64	72 [4]	1LE1502-1AD5■-■■■■	33	0.0078
1.5	1.75	112 M	700	20	70.2	71.1	68.7	0.66	4.65	1.9	3.5	2.1	67	78 [4]	1LE1502-1BD2■-■■■■	42	0.0094
2.2	2.55	132 S	715	29	74.2	74.1	71.4	0.66	6.5	1.7	3.9	2.4	63	75	1LE1502-1CD0■-■■■■	60	0.019
3	3.45	132 M	715	40	77	77.4	75.2	0.68	8.3	1.8	3.9	2.2	63	75	1LE1502-1CD2■-■■■■	62	0.024
4	4.55	160 M	720	53	79.2	79.3	76.3	0.67	10.9	1.6	4.1	2.3	63	75	1LE1502-1DD2■-■■■■	89	0.044
5.5	6.3	160 M	720	73	81.4	81.9	80.3	0.68	14.3	1.6	4	2.2	63	75	1LE1502-1DD3■-■■■■	96	0.056
7.5	8.6	160 L	715	100	83.1	83.7	82.4	0.69	18.9	1.7	3.8	2.2	63	75	1LE1502-1DD4■-■■■■	120	0.077
11	13.2	180 L	720	146	85	86.2	86	0.7	26.5	1.9	5	2.5	65	78	1LE1502-1ED4■-■■■■	160	0.20
15	18	200 L	718	199	86.2	87.9	88.4	0.75	33.5	2.5	5.5	2.9	55	69	1LE1502-2AD5■-■■■■	220	0.3
18.5	22	225 S	730	242	86.9	87.8	87.4	0.78	39.5	2.2	5.5	2.7	59	72	1LE1502-2BD0■-■■■■	250	0.43
22	26.5	225 M	730	288	87.4	88.3	88.1	0.79	46	2.3	5.5	2.7	60	73	1LE1502-2BD2■-■■■■	270	0.5
30	36	250 M	732	391	88.3	89.2	89.2	0.81	61	2.3	5.5	2.6	54	68	1LE1502-2CD2■-■■■■	370	0.84
37	44.5	280 S	735	481	88.8	89.7	89.7	0.81	74	2.1	5	2.1	54	68	1LE1502-2DD0■-■■■■	460	1.22
45	54	280 M	735	585	89.2	90.3	90.4	0.81	90	2.1	5.3	2.1	58	71	1LE1502-2DD2■-■■■■	500	1.42
55	66	315 S	740	710	89.7	90.1	89.7	0.8	111	2.1	5.7	2.6	69	83	1LE1502-3AD0■-■■■■	640	2
75	90	315 M	738	970	90.3	90.7	90.5	0.81	148	2.3	5.9	2.7	69	84	1LE1502-3AD2■-■■■■	720	2.5
90	108	315 L	738	1165	90.7	91.2	91.2	0.84	171	2.2	5.9	2.6	68	83	1LE1502-3AD4■-■■■■	840	3.1
110	132	315 L	740	1419	91.1	91.6	91.5	0.82	215	2.7	6.7	2.9	73	87	1LE1502-3AD5■-■■■■	1000	3.9
132	158	315 L	740	1703	91.5	91.9	91.6	0.81	255	2.9	7.2	3.3	75	89	1LE1502-3AD6■-■■■■	1080	4.5

Voltages [2]		Version				Order code
50 Hz 230 VΔ/400 VY	60 Hz [1] 460 VY	**Standard**	2	2		–
50 Hz 400 VΔ/690 VY	60 Hz [1] 460 VΔ	**Standard**	3	4		–
50 Hz 500 VY		Without additional charge	2	7		–
50 Hz 500 VΔ		Without additional charge	4	0		–
For other voltages [1] and more information, see from page 2/88			9	0		. . .
Types of construction		Version				Order code
Without flange	IM B3 [3]	**Standard**			A	–
With flange	IM B5 [3]	With additional charge			F	–
With flange	IM B14 [3]	With additional charge			K	–
For other types of construction and more information, see from page 2/94					■	. . .
Motor protection		Version				Order code
Without		**Standard**			A	–
PTC thermistor with 3 temperature sensors		With additional charge			B	–
For other motor protection and more information, see from page 2/99					■	. . .
Terminal box position		Version				
Terminal box at top		**Standard**			4	
For other terminal box positions and more information, see from page 2/101					■	

Special versions		Order code(s)
Forced-air cooled motors w/o ext. fan/fan cover (IC 418)	1LE1502-. . . . ■-■■■■ -Z	F90 +. . .+. . .+. . .
For options, see from page 2/109	1LE1502-. . . . ■-■■■■ -Z	. . .+. . .+. . .+. . .

[1] Operating values at rated power for 60 Hz are stored in the Drive Technology Configurator (DT Configurator; see Appendix, "Tools and engineering").

[2] Parallel supply lines are required in the case of connection to ≤ 240 V. For frame size 315 with connection to ≤ 240 V, due to the high current, a drilled, removable entry plate (order code **R52**) or a larger terminal box (order code **R50**) can be used. Order codes **R52** and **R50** alter the motor dimensions.

[3] Types derived from IM B3 (IM B6/7/8, IM V6 and IM V5), from IM B5 (IM V3 and IM V1) and from IM B14 (IM V19 and IM V18) are possible, provided that no requirement exists for stamping of the type on the rating plate. The basic type IM B3, IM B5 or IM B14 is stamped as standard on the rating plate. If mounted in a different position, the position must be specified to ensure that the condensation drainage holes are positioned correctly.

[4] The noise limit values specified as permissible in IEC 60034-9 under load can be exceeded.

© Siemens AG 2018

2

Selection and ordering data

P_{rated}, 50 Hz/ P50	P_{rated}, 60 Hz/ P60 [1]	Frame size	Operating values at rated power: n_{rated}, 50 Hz	T_{rated}, 50 Hz	η_{rated}, 50 Hz, 4/4	η_{rated}, 50 Hz, 3/4	η_{rated}, 50 Hz, 2/4	cos-φ_{rated}, 50 Hz, 4/4	I_{rated}, 50 Hz, 400 V	T_{LR}/T_{rated}, 50 Hz	I_{LR}/I_{rated}, 50 Hz	T_B/T_{rated}, 50 Hz	L_{pfA}, 50 Hz	L_{WA}, 50 Hz	Cast-iron series 1LE1502 – *Basic Line* Article No.	$m_{IM\ B3}$	J
kW	kW	FS	rpm	Nm	%	%	%		A				dB(A)	dB(A)		kg	kgm²
• Cooling: Self-ventilated (IC 411) or with order code F90 forced-air cooled without external fan and fan cover (IC 418) • Efficiency according to IEC 60034-30: IE1 Standard Efficiency, service factor (SF) 1.1 • Insulation: Thermal class 155 (temperature class F), IP55 degree of protection, utilization in accordance with thermal class 155 (temperature class F)																	
2-pole: 3000 rpm at 50 Hz, 3600 rpm at 60 Hz [1]																	
4	**4.6**	**100 L**	2850	13	83.1	83.9	83	0.85	8.2	4.5	7	4.1	67	79	**1LE1502-1AA6■-■■■■**	33	0.0044
5.5	**6.3**	**112 M**	2935	18	84.7	84.7	82.7	0.86	10.9	2.9	7.5	3.8	69	81	**1LE1502-1BA6■-■■■■**	40	0.0085
11	**12.6**	**132 M**	2920	36	87.6	88.3	87.8	0.9	20	2.8	7.5	3.7	68	80	**1LE1502-1CA6■-■■■■**	76	0.022
22	**24.5**	**160 L**	2935	72	89.9	90.2	89.5	0.9	39	2.6	7.5	3.4	70	82	**1LE1502-1DA6■-■■■■**	125	0.049
30	**33.5**	**180 L**	2940	97	90.7	91.5	91.5	0.89	54	2.4	8.1	3.5	72	85	**1LE1502-1EA6■-■■■■**	180	0.094
45	**51**	**200 L**	2955	145	91.7	92.3	92.4	0.85	83	2.5	8.1	3.6	71	85	**1LE1502-2AA6■-■■■■**	245	0.176
55	**62**	**225 M**	2960	177	92.1	92.4	92	0.88	98	2.5	7.3	3.2	76	89	**1LE1502-2BA6■-■■■■**	330	0.27
75	**84**	**250 M**	2970	241	92.7	92.8	92.1	0.87	134	2.4	7.3	3.1	76	89	**1LE1502-2CA6■-■■■■**	420	0.48
110	**123**	**280 M**	2975	353	93.3	93.5	93.1	0.9	189	2.4	7.3	3.1	77	90	**1LE1502-2DA6■-■■■■**	620	1
4-pole: 1500 rpm at 50 Hz, 1800 rpm at 60 Hz [1]																	
4	**4.6**	**100 L**	1435	27	83.1	83.8	82.3	0.81	8.6	2.9	5.8	3.1	60	72	**1LE1502-1AB6■-■■■■**	36	0.01
5.5	**6.3**	**112 M**	1420	37	84.7	85.9	85.3	0.81	11.6	3	5.8	3.1	58	70	**1LE1502-1BB6■-■■■■**	43	0.012
11	**12.6**	**132 M**	1450	72	87.6	88.2	87.6	0.84	21.5	2.5	7.2	3	64	76	**1LE1502-1CB6■-■■■■**	76	0.033
18.5	**21.3**	**160 L**	1460	121	89.3	89.8	89.2	0.85	35	2.7	7.2	3.2	65	77	**1LE1502-1DB6■-■■■■**	125	0.068
30	**34.5**	**180 L**	1465	196	90.7	91.7	91.9	0.79	60	2.6	7.2	3.4	64	77	**1LE1502-1EB6■-■■■■**	185	0.159
37	**42.5**	**200 L**	1470	240	91.2	92	92.1	0.82	71	2.4	6.8	2.9	64	78	**1LE1502-2AB6■-■■■■**	240	0.246
55	**63**	**225 M**	1475	356	92.1	92.8	92.6	0.86	100	2.5	6.7	2.6	70	83	**1LE1502-2BB6■-■■■■**	320	0.49
75	**86**	**250 M**	1482	483	92.7	93.1	92.6	0.84	139	2.5	7.4	3	73	87	**1LE1502-2CB6■-■■■■**	440	0.86
110	**127**	**280 M**	1486	707	93.3	93.5	93	0.85	200	2.6	8	3.3	75	89	**1LE1502-2DB6■-■■■■**	670	1.7

Voltages [2]		Version					Order code
50 Hz 230 VΔ/400 VY	60 Hz [1] 460 VY	**Standard**	2	2			–
50 Hz 400 VΔ/690 VY	60 Hz [1] 460 VΔ	**Standard**	3	4			–
50 Hz 500 VY		Without additional charge	2	7			–
50 Hz 500 VΔ		Without additional charge	4	0			–
For other voltages [1] and more information, see from page 2/88			9	0			. . .
Types of construction		Version					Order code
Without flange	IM B3 [3]	**Standard**			A		–
With flange	IM B5 [3]	With additional charge			F		–
With flange	IM B14 [3]	With additional charge			K		–
For other types of construction and more information, see from page 2/94					■		. . .
Motor protection		Version					Order code
Without		**Standard**				A	–
PTC thermistor with 3 temperature sensors		With additional charge				B	–
For other motor protection and more information, see from page 2/99						■	. . .
Terminal box position		Version					
Terminal box at top		**Standard**					4
For other terminal box positions and more information, see from page 2/101							■
Special versions							Order code(s)
Forced-air cooled motors w/o ext. fan/fan cover (IC 418)		**1LE1502-. . . . ■-■■■■**					**-Z F90 +. . .+. . .+. . .**
For options, see from page 2/109		**1LE1502-. . . . ■-■■■■**					**-Z . . .+. . .+. . .+. . .**

1) Operating values at rated power for 60 Hz are stored in the Drive Technology Configurator (DT Configurator; see Appendix, "Tools and engineering").

2) Parallel supply lines are required in the case of connection to ≤ 240 V. For frame size 315 with connection to ≤ 240 V, due to the high current, a drilled, removable entry plate (order code **R52**) or a larger terminal box (order code **R50**) can be used. Order codes **R52** and **R50** alter the motor dimensions.

3) Types derived from IM B3 (IM B6/7/8, IM V6 and IM V5), from IM B5 (IM V3 and IM V1) and from IM B14 (IM V19 and IM V18) are possible, provided that no requirement exists for stamping of the type on the rating plate. The basic type IM B3, IM B5 or IM B14 is stamped as standard on the rating plate. If mounted in a different position, the position must be specified to ensure that the condensation drainage holes are positioned correctly.

© Siemens AG 2018

IE1

Selection and ordering data

P_{rated}, 50 Hz/ P50	P_{rated}, 60 Hz/ P60 [1]	Frame size	Operating values at rated power: n_{ra-ted}, 50 Hz	T_{ra-ted}, 50 Hz	η_{ra-ted}, 50 Hz, 4/4	η_{ra-ted}, 50 Hz, 3/4	η_{ra-ted}, 50 Hz, 2/4	cos-φ_{rated}, 50 Hz, 4/4	I_{ra-ted}, 50 Hz, 400 V	T_{LR}/T_{ra-ted}, 50 Hz	I_{LR}/I_{ra-ted}, 50 Hz	T_B/T_{ra-ted}, 50 Hz	L_{pfA}, 50 Hz	L_{WA}, 50 Hz	Cast-iron series 1LE1502 – *Basic Line* Article No.	$m_{IM\ B3}$	J
kW	kW	FS	rpm	Nm	%	%	%		A				dB(A)	dB(A)		kg	kgm^2
• Cooling: Self-ventilated (IC 411) or with order code F90 forced-air cooled without external fan and fan cover (IC 418) • Efficiency according to IEC 60034-30: IE1 Standard Efficiency, service factor (SF) 1.1 • Insulation: Thermal class 155 (temperature class F), IP55 degree of protection, utilization in accordance with thermal class 155 (temperature class F)																	
6-pole: 1000 rpm at 50 Hz, 1200 rpm at 60 Hz [1]																	
2.2	**2.55**	**100 L**	930	23	77.7	79.5	78.1	0.78	5.2	2	4	2.2	59	71	**1LE1502-1AC6■-■■■■**	35	0.0084
3	**3.45**	**112 M**	945	30	79.7	79.5	76.3	0.72	7.5	2.9	4.6	3	57	69	**1LE1502-1BC6■-■■■■**	45	0.013
7.5	**8.6**	**132 M**	950	75	84.7	85.3	84.1	0.74	17.3	2.4	5.3	3	63	75	**1LE1502-1CC6■-■■■■**	78	0.032
15	**17.3**	**160 L**	965	148	87.7	87.9	86.5	0.75	33	2.9	6	3.4	67	79	**1LE1502-1DC6■-■■■■**	140	0.094
18.5	**22**	**180 L**	970	182	88.6	89.4	89.1	0.77	39	2.2	5.9	2.9	56	69	**1LE1502-1EC6■-■■■■**	165	0.206
30	**34.5**	**200 L**	975	294	90.2	91.4	91.7	0.78	62	2.6	6	2.7	61	75	**1LE1502-2AC6■-■■■■**	245	0.381
37	**44.5**	**225 M**	978	361	90.8	91.5	91.5	0.82	72	2.5	6.1	2.8	76	93	**1LE1502-2BC6■-■■■■**	310	0.62
45	**54**	**250 M**	982	438	91.4	92.2	92.1	0.83	86	2.7	6.6	2.3	76	95	**1LE1502-2CC6■-■■■■**	390	0.93
75	**90**	**280 M**	985	727	92.6	93.3	93.2	0.84	139	2.9	7	2.7	61	75	**1LE1502-2DC6■-■■■■**	560	1.7
8-pole: 750 rpm at 50 Hz, 900 rpm at 60 Hz [1]																	
15	**18**	**180 L**	718	199	86.2	87.5	87.2	0.74	34	2.1	4.7	2.3	64	78	**1LE1502-1ED6■-■■■■**	190	0.263
18.5	**22**	**200 L**	720	245	86.9	88.2	88.4	0.76	40	2.7	6.1	3.2	59	72	**1LE1502-2AD6■-■■■■**	250	0.416
30	**36**	**225 M**	730	392	88.3	89.1	89.1	0.79	62	2.6	5.6	2.8	57	70	**1LE1502-2BD6■-■■■■**	320	0.73
37	**44.5**	**250 M**	730	484	88.8	89.8	89.9	0.83	72	2.3	5.7	2.6	63	77	**1LE1502-2CD6■-■■■■**	405	1
55	**66**	**280 M**	736	714	89.7	90.4	90.5	0.8	111	2.5	5.7	2.5	70	81	**1LE1502-2DD6■-■■■■**	550	1.6

Voltages [2]		Version					Order code
50 Hz 230 VΔ/400 VY	60 Hz [1] 460 VY	**Standard**	**2**	**2**			–
50 Hz 400 VΔ/690 VY	60 Hz [1] 460 VΔ	**Standard**	**3**	**4**			–
50 Hz 500 VY		Without additional charge	**2**	**7**			–
50 Hz 500 VΔ		Without additional charge	**4**	**0**			–
For other voltages [1] and more information, see from page 2/88			**9**	**0**			. . .
Types of construction		Version					Order code
Without flange	IM B3 [3]	**Standard**			**A**		–
With flange	IM B5 [3]	With additional charge			**F**		–
With flange	IM B14 [3]	With additional charge			**K**		–
For other types of construction and more information, see from page 2/94					■		. . .
Motor protection		Version					Order code
Without		**Standard**				**A**	–
PTC thermistor with 3 temperature sensors		With additional charge				**B**	–
For other motor protection and more information, see from page 2/99						■	. . .
Terminal box position		Version					
Terminal box at top		**Standard**					**4**
For other terminal box positions and more information, see from page 2/101							■

Special versions		Order code(s)
Forced-air cooled motors w/o ext. fan/fan cover (IC 418)	**1LE1502-. . . . ■-■■■■-Z**	**F90 +. . .+. . .+. . .**
For options, see from page 2/109	**1LE1502-. . . . ■-■■■■-Z**	**. . .+. . .+. . .+. . .**

[1] Operating values at rated power for 60 Hz are stored in the Drive Technology Configurator (DT Configurator; see Appendix, "Tools and engineering").

[2] Parallel supply lines are required in the case of connection to ≤ 240 V. For frame size 315 with connection to ≤ 240 V, due to the high current, a drilled, removable entry plate (order code **R52**) or a larger terminal box (order code **R50**) can be used. Order codes **R52** and **R50** alter the motor dimensions.

[3] Types derived from IM B3 (IM B6/7/8, IM V6 and IM V5), from IM B5 (IM V3 and IM V1) and from IM B14 (IM V19 and IM V18) are possible, provided that no requirement exists for stamping of the type on the rating plate. The basic type IM B3, IM B5 or IM B14 is stamped as standard on the rating plate. If mounted in a different position, the position must be specified to ensure that the condensation drainage holes are positioned correctly.

© Siemens AG 2018

2

Selection and ordering data

Technical specifications at 60 Hz/P50 power rating

P_{rated}, 60 Hz/ P50	P_{rated}, 60 Hz/ P60	Frame size	Operating values at rated power: n_{rated}, 60 Hz	T_{rated}, 60 Hz	Different IE class 60 Hz/P60	η_{rated}, 60 Hz, 4/4	η_{rated}, 60 Hz, 3/4	η_{rated}, 60 Hz, 2/4	cos-φ_{rated}, 60 Hz, 4/4	I_{rated}, 60 Hz, 460 V	T_{LR}/T_{rated}, 60 Hz	I_{LR}/I_{rated}, 60 Hz	T_B/T_{rated}, 60 Hz	L_{pfA}, 60 Hz	L_{WA}, 60 Hz	Aluminum series 1LE1043 Article No.	$m_{IM\ B3}$	J
kW	kW	FS	rpm	Nm		%	%	%		A				dB(A)	dB(A)		kg	kgm²
• Cooling: Self-ventilated (IC 411) or with order code F90 forced-air cooled without external fan and fan cover (IC 418) • Efficiency according to IEC 60034-30: IE3 Premium Efficiency • Insulation: Thermal class 155 (temperature class F), IP55 degree of protection, utilization in accordance with thermal class 130 (temperature class B)																		
2-pole: 3000 rpm at 50 Hz, 3600 rpm at 60 Hz																		
0.75	**0.86**	**80 M**	3480	2.1		77	77.2	75.7	0.84	1.45	3	7.1	3.6	64	75	**1LE1043-0DA2■-■■■■**	11	0.0011
1.1	**1.27**	**80 M**	3500	3		84	84	82	0.83	1.98	3.3	8.4	4	64	75	**1LE1043-0DA3■-■■■■**	12	0.0013
1.5	**1.75**	**90 S**	3525	4.1		85.5	84.8	82.3	0.84	2.6	3.1	9.8	4.9	69	81	**1LE1043-0EA0■-■■■■**	15	0.0021
2.2	**2.55**	**90 L**	3530	6		86.5	86.4	84.5	0.87	3.65	3	9.6	4.9	69	81	**1LE1043-0EA4■-■■■■**	19	0.0031
3	**3.45**	**100 L**	3525	8.1		88.5	88.7	87.2	0.87	4.9	3.8	9.7	5.5	71	83	**1LE1043-1AA4■-■■■■**	26	0.0054
4	**4.55**	**112 M**	3560	10		88.5	88	86.2	0.88	6	3.2	10.8	5.1	73	85	**1LE1043-1BA2■-■■■■**	34	0.012
5.5	**6.3**	**132 S**	3555	15		89.5	89.4	88.2	0.9	8.6	2.1	8.6	4.4	72	84	**1LE1043-1CA0■-■■■■**	43	0.024
7.5	**8.6**	**132 S**	3555	20		90.2	90.5	90	0.91	11.5	2.4	9.5	4.7	72	84	**1LE1043-1CA1■-■■■■**	57	0.031
11	**12.6**	**160 M**	3560	30		91	90.4	88.4	0.88	17.2	2.8	8.5	4.3	77	89	**1LE1043-1DA2■-■■■■**	75	0.053
15	**17.3**	**160 M**	3565	40		91	90.5	88.9	0.86	24	3.1	9.7	4.8	77	89	**1LE1043-1DA3■-■■■■**	84	0.061
18.5	**21.3**	**160 L**	3560	50		91.7	91.5	90.3	0.9	28	3.1	9.4	4.4	77	89	**1LE1043-1DA4■-■■■■**	94	0.068
22	**24.5**	**180 M**	3560	59		91.7	91.4	90	0.89	34	2.8	8.2	3.9	77	89	**1LE1043-1EA2■-■■■■**	129	0.08
30	**33.5**	**200 L**	3560	80		92.4	92.2	91.4	0.87	47	2.9	7.6	3.6	77	84	**1LE1043-2AA4■-■■■■**	173	0.134
37	**41.5**	**200 L**	3560	99		93	92.8	91.6	0.88	57	2.8	7.5	3.6	77	84	**1LE1043-2AA5■-■■■■**	194	0.158
4-pole: 1500 rpm at 50 Hz, 1800 rpm at 60 Hz																		
0.75	**0.86**	**80 M**	1760	4.1		83.5	82.6	79.3	0.71	1.59	3.1	8.3	4.7	55	66	**1LE1043-0DB3■-■■■■**	14	0.0021
1.1	**1.27**	**90 S**	1750	6		86.5	86.4	84.2	0.75	2.15	3.4	8.2	4.4	58	70	**1LE1043-0EB0■-■■■■**	16	0.0029
1.5	**1.75**	**90 L**	1755	8.2		86.5	86.4	84.6	0.77	2.85	3	8.4	4.3	58	70	**1LE1043-0EB4■-■■■■**	19	0.0049
2.2	**2.55**	**100 L**	1770	11.9		89.5	89.2	87.2	0.81	3.8	3.5	9.6	5.1	62	74	**1LE1043-1AB4■-■■■■**	30	0.014
3	**3.45**	**100 L**	1760	16.3		89.5	89.5	88.3	0.82	5.1	3.1	9.5	4.6	62	74	**1LE1043-1AB5■-■■■■**	30	0.014
4	**4.55**	**112 M**	1770	19		89.5	89.4	87.7	0.8	6.5	2.9	8.2	4.3	62	74	**1LE1043-1BB2■-■■■■**	34	0.017
5.5	**6.3**	**132 S**	1775	30		91.7	91.6	90.5	0.81	9.3	3.9	9.7	4.5	68	80	**1LE1043-1CB0■-■■■■**	64	0.046
7.5	**8.6**	**132 M**	1770	40		91.7	91.8	91	0.83	12.4	2.7	9.6	4.2	68	80	**1LE1043-1CB2■-■■■■**	64	0.046
11	**12.6**	**160 M**	1775	59		92.4	92.3	91.1	0.83	18	3	8.9	3.8	69	81	**1LE1043-1DB2■-■■■■**	83	0.083
15	**17.3**	**160 L**	1780	80		93	92.8	91.4	0.81	25	2.9	9.5	4.3	69	81	**1LE1043-1DB4■-■■■■**	100	0.099
18.5	**21.3**	**180 M**	1775	100		93.6	93.7	93.1	0.81	30.5	2.7	7.8	3.6	68	75	**1LE1043-1EB2■-■■■■**	134	0.13
22	**25.3**	**180 L**	1775	118		93.6	93.8	93.3	0.81	36.5	2.8	7.7	3.7	70	77	**1LE1043-1EB4■-■■■■**	142	0.14
30	**34.5**	**200 L**	1778	161	IE2	94.1	94.3	93.8	0.83	48	3	8.1	3.5	70	77	**1LE1043-2AB5■-■■■■**	189	0.22

Voltages		Version					Order code
50 Hz 230 VΔ/400 VY	60 Hz 460 VY	**Standard**	2	2			–
50 Hz 400 VΔ/690 VY	60 Hz 460 VΔ	**Standard**	3	4			–
50 Hz 500 VY		Without additional charge	2	7			–
50 Hz 500 VΔ		Without additional charge	4	0			–
For other voltages and more information, see from page 2/85			9	0			. . .
Types of construction		Version					Order code
Without flange	IM B3 [1]	**Standard**			A		–
With flange	IM B5 [1]	With additional charge			F		–
With flange	IM B14 [1]	With additional charge			K		–
For other types of construction and more information, see from page 2/90					■		. . .
Motor protection		Version					Order code
Without		**Standard**				A	–
PTC thermistor with 1 or 3 temperature sensors (frame sizes 80, 90 or 100 to 200)		With additional charge				B	–
For other motor protection and more information, see from page 2/98						■	. . .
Terminal box position		Version					
Terminal box at top		**Standard**					4
For other terminal box positions and more information, see from page 2/100							■

Special versions		Order code(s)
Forced-air cooled motors w/o ext. fan/fan cover (IC 416)	**1LE1043-. . . . ■–■■■■**	**-Z F90**
For other terminal box positions and more information, see from page 2/102	**1LE1043-. . . . ■–■■■■**	**-Z** . . .+. . .+. . .+. . .

[1] Types derived from IM B3 (IM B6/7/8, IM V6, and IM V5), from IM B5 (IM V3 and IM V1) and from IM B14 (IM V19 and IM V18) are possible, provided that no requirements exist for condensation drainage holes (**H03**) or stamping of the type on the rating plate. The basic type IM B3, IM B5, or IM B14 is stamped as standard on the rating plate. For orders with condensation drainage holes (**H03**), the type must be specified.

© Siemens AG 2018

Selection and ordering data

Technical specifications at 60 Hz/P50 power rating

			Operating values at rated power												Aluminum series 1LE1043 Article No.		
P_{rated}, 60 Hz/P50	P_{rated}, 60 Hz/P60	Frame size	n_{rated}, 60 Hz	T_{rated}, 60 Hz	Different IE class 60 Hz/P60	η_{rated}, 60 Hz, 4/4	η_{rated}, 60 Hz, 3/4	η_{rated}, 60 Hz, 2/4	cos-φ_{rated}, 60 Hz, 4/4	I_{rated}, 60 Hz, 460 V	T_{LR}/T_{rated}, 60 Hz	I_{LR}/I_{rated}, 60 Hz	T_B/T_{rated}, 60 Hz	L_{pfA}, 60 Hz	L_{WA}, 60 Hz		$m_{IM\ B3}$	J
kW	kW	FS	rpm	Nm		%	%	%		A				dB(A)	dB(A)	▲ New	kg	kgm²
• Cooling: Self-ventilated (IC 411) or with order code F90 forced-air cooled without external fan and fan cover (IC 418) • Efficiency according to IEC 60034-30: IE3 Premium Efficiency • Insulation: Thermal class 155 (temperature class F), IP55 degree of protection, utilization in accordance with thermal class 130 (temperature class B)																		
6-pole: 1000 rpm at 50 Hz, 1200 rpm at 60 Hz																		
0.75	0.86	90 S	1155	6.2		82.5	82.4	79.9	0.65	1.76	2.4	5.3	3.1	46	58	1LE1043-0EC0■-■■■■	16	0.004
1.1	1.27	100 L	1180	8.9		87.5	87.2	84.8	0.69	2.3	2.4	6.7	3.3	62	74	1LE1043-1AC3■-■■■■	30	0.014
1.5	1.75	112 S	1170	14		88.5	88.7	87.3	0.76	3.25	2	6.2	2.8	65	77	▲ 1LE1043-1BC1■-■■■■	34	0.017
2.2	2.55	132 S	1180	21		89.5	89.8	88.8	0.77	4.65	2	7.1	3.1	67	79	▲ 1LE1043-1CC1■-■■■■	52	0.037
3	3.45	132 S	1185	24		89.5	89.6	88.4	0.75	5.6	2.3	7.5	3.3	67	79	1LE1043-1CC0■-■■■■	52	0.037
4	4.55	132 M	1175	30		89.5	89.6	88.4	0.73	7.1	2.4	7.6	3.4	67	79	1LE1043-1CC2■-■■■■	52	0.037
5.5	6.3	132 M	1180	45		91	91.4	90.5	0.74	10.3	2.3	7.2	3.3	67	79	1LE1043-1CC3■-■■■■	64	0.046
7.5	8.6	160 M	1185	60		91	91.1	90	0.75	13.8	2.4	5.9	2.6	70	82	1LE1043-1DC2■-■■■■	93	0.098
11	12.6	160 L	1180	89		91.7	91.9	91	0.75	20	2.3	5.8	2.6	70	82	1LE1043-1DC4■-■■■■	115	0.12
15	18	180 L	1178	122	IE2	91.7	92	91.4	0.79	26	2.5	6.8	3	61	68	1LE1043-1EC4■-■■■■	130	0.19
18.5	22	200 L	1180	150	IE2	93	93.8	93.8	0.78	32	2.8	6.5	3	64	71	1LE1043-2AC4■-■■■■	166	0.28
22	26.5	200 L	1180	178	IE2	93	93.5	93.4	0.79	37.5	2.6	6.3	2.8	63	70	1LE1043-2AC5■-■■■■	179	0.32

Voltages		Version			Order code
50 Hz 230 VΔ/400 VY	60 Hz 460 VY	**Standard**	2	2	–
50 Hz 400 VΔ/690 VY	60 Hz 460 VΔ	**Standard**	3	4	–
50 Hz 500 VY		Without additional charge	2	7	–
50 Hz 500 VΔ		Without additional charge	4	0	–
For other voltages and more information, see from page 2/85			9	0	. . .

Types of construction		Version		Order code
Without flange	IM B3 [1]	**Standard**	A	–
With flange	IM B5 [1]	With additional charge	F	–
With flange	IM B14 [1]	With additional charge	K	–
For other types of construction and more information, see from page 2/90			■	. . .

Motor protection	Version		Order code
Without	**Standard**	A	–
PTC thermistor with 1 or 3 temperature sensors (frame sizes 90 or 100 to 200)	With additional charge	B	–
For other motor protection and more information, see from page 2/98		■	. . .

Terminal box position	Version	
Terminal box at top	**Standard**	4
For other terminal box positions and more information, see from page 2/100		■

Special versions		Order code(s)
Forced-air cooled motors w/o ext. fan/fan cover (IC 416)	1LE1043-. . . . ■–■■■■	-Z F90 +. . .+. . .+. . .
For other terminal box positions and more information, see from page 2/102	1LE1043-. . . . ■–■■■■	-Z . . .+. . .+. . .+. . .

[1] Types derived from IM B3 (IM B6/7/8, IM V6, and IM V5), from IM B5 (IM V3 and IM V1) and from IM B14 (IM V19 and IM V18) are possible, provided that no requirements exist for condensation drainage holes (**H03**) or stamping of the type on the rating plate. The basic type IM B3, IM B5, or IM B14 is stamped as standard on the rating plate. For orders with condensation drainage holes (**H03**), the type must be specified.

© Siemens AG 2018

2

Selection and ordering data

Technical specifications at 60 Hz/P50 power rating

P_{rated}, 60 Hz/ P50	P_{rated}, 60 Hz/ P60	Frame size	Operating values at rated power: n_{rated}, 60 Hz	T_{rated}, 60 Hz	Different IE class 60 Hz/P60	η_{rated}, 60 Hz, 4/4	η_{rated}, 60 Hz, 3/4	η_{rated}, 60 Hz, 2/4	cos-φ_{rated}, 60 Hz, 4/4	I_{rated}, 60 Hz, 460 V	T_{LR}/T_{rated}, 60 Hz	I_{LR}/I_{rated}, 60 Hz	T_B/T_{rated}, 60 Hz	L_{pfA}, 60 Hz	L_{WA}, 60 Hz	Aluminum series 1LE1043 Article No.	$m_{IM\ B3}$	J
kW	kW	FS	rpm	Nm		%	%	%		A				dB(A)	dB(A)	▲ New	kg	kgm^2
• Cooling: Self-ventilated (IC 411) or with order code F90 forced-air cooled without external fan and fan cover (IC 418) • Efficiency according to IEC 60034-30: IE3 Premium Efficiency • Insulation: Thermal class 155 (temperature class F), IP55 degree of protection, utilization in accordance with thermal class 130 (temperature class B)																		
2-pole: 3000 rpm at 50 Hz, 3600 rpm at 60 Hz																		
4	**4.55**	**100 L**	3500	12		88.5	89.6	89.5	0.89	7.3	3	8.4	4	71	83	▲ **1LE1043-1AA6■-■■■■**	26	0.0054
11	**12.6**	**132 M**	3565	29		91	91.1	90.3	0.86	17.6	2.5	9.6	5.2	72	84	**1LE1043-1CA6■-■■■■**	57	0.031
15	**17.3**	**132 L**	3555	46		91.7	92.1	91.7	0.89	26.5	2.4	8.7	4.8	72	84	▲ **1LE1043-1CA7■-■■■■**	65	0.035
22	**25.3**	**160 L**	3560	59		91.7	91.8	90.9	0.9	33.5	3.1	9.7	4.5	77	89	**1LE1043-1DA6■-■■■■**	105	0.073
30	**33.5**	**180 L**	3560	80		92.4	92.6	92.1	0.87	47	2.9	8.8	4.5	77	89	**1LE1043-1EA6■-■■■■**	140	0.094
45	**51**	**200 L**	3560	121		93.6	93.7	93	0.86	70	3	8.4	3.7	77	84	**1LE1043-2AA6■-■■■■**	194	0.170
4-pole: 1500 rpm at 50 Hz, 1800 rpm at 60 Hz																		
11	**12.6**	**132 M**	1775	59		92.4	92.6	91.8	0.79	19	3.1	8.7	4.1	68	80	**1LE1043-1CB6■-■■■■**	62	0.046
18.5	**21.3**	**160 L**	1780	99		93.6	93.3	91.9	0.75	33	3.9	9.6	4.5	69	81	**1LE1043-1DB6■-■■■■**	110	0.099
30	**34.5**	**180 L**	1775	161	IE2	94.1	94.4	94	0.78	51	3.1	8.8	4.1	70	77	**1LE1043-1EB6■-■■■■**	154	0.173
37	**42.5**	**200 L**	1780	198		94.5	94.7	94.2	0.8	61	3.3	9	4	70	77	**1LE1043-2AB6■-■■■■**	205	0.275

Voltages		Version					Order code
50 Hz 230 VΔ/400 VY	60 Hz 460 VY	**Standard**	2	2			–
50 Hz 400 VΔ/690 VY	60 Hz 460 VΔ	**Standard**	3	4			–
50 Hz 500 VY		Without additional charge	2	7			–
50 Hz 500 VΔ		Without additional charge	4	0			–
For other voltages and more information, see from page 2/85			9	0			. . .
Types of construction		Version					Order code
Without flange	IM B3 [1]	**Standard**			A		–
With flange	IM B5 [1]	With additional charge			F		–
With flange	IM B14 [1]	With additional charge			K		–
For other types of construction and more information, see from page 2/90					■		. . .
Motor protection		Version					Order code
Without		**Standard**				A	–
PTC thermistor with 3 temperature sensors		With additional charge				B	–
For other motor protection and more information, see from page 2/98						■	. . .
Terminal box position		Version					
Terminal box at top		**Standard**					4
For other terminal box positions and more information, see from page 2/100							■
Special versions							Order code(s)
Forced-air cooled motors w/o ext. fan/fan cover (IC 416)		**1LE1043-. . . . ■–■■■■**					-Z F90 +. . .+. . .+. . .
For other terminal box positions and more information, see from page 2/102		**1LE1043-. . . . ■–■■■■**					-Z . . .+. . .+. . .+. . .

[1] Types derived from IM B3 (IM B6/7/8, IM V6, and IM V5), from IM B5 (IM V3 and IM V1) and from IM B14 (IM V19 and IM V18) are possible, provided that no requirements exist for condensation drainage holes (**H03**) or stamping of the type on the rating plate. The basic type IM B3, IM B5, or IM B14 is stamped as standard on the rating plate. For orders with condensation drainage holes (**H03**), the type must be specified.

© Siemens AG 2018

Selection and ordering data

Technical specifications at 60 Hz/P50 power rating

			Operating values at rated power													Cast-iron series 1LE1543 – Basic Line		
P_{rated}, 60 Hz/P50	P_{rated}, 60 Hz/P60	Frame size	n_{rated}, 60 Hz	T_{rated}, 60 Hz	Different IE class 60 Hz/P60	η_{rated}, 60 Hz, 4/4	η_{rated}, 60 Hz, 3/4	η_{rated}, 60 Hz, 2/4	cos-φ_{rated}, 60 Hz, 4/4	I_{rated}, 60 Hz, 460 V	T_{LR}/T_{rated}, 60 Hz	I_{LR}/I_{rated}, 60 Hz	T_B/T_{rated}, 60 Hz	L_{pfA}, 60 Hz	L_{WA}, 60 Hz	Article No.	$m_{IM\ B3}$	J
kW	kW	FS	rpm	Nm		%	%	%		A				dB(A)	dB(A)		kg	kgm²
• Cooling: Self-ventilated (IC 411) or with order code F90 forced-air cooled without external fan and fan cover (IC 418) • Efficiency according to IEC 60034-30: IE3 Premium Efficiency • Insulation: Thermal class 155 (temperature class F), IP55 degree of protection, utilization in accordance with thermal class 130 (temperature class B)																		
2-pole: 3000 rpm at 50 Hz, 3600 rpm at 60 Hz																		
0.75	0.86	80 M	3480	2.1		77	77.2	75.7	0.84	1.45	3	7.1	3.6	64	75	1LE1543-0DA2■-■■■■	18	0.0011
1.1	1.27	80 M	3500	3		84	84	82	0.83	1.98	3.3	8.4	4	64	75	1LE1543-0DA3■-■■■■	21	0.0013
1.5	1.75	90 S	3525	4.1		85.5	84.8	82.3	0.84	2.6	3.1	9.8	4.9	69	81	1LE1543-0EA0■-■■■■	26	0.0021
2.2	2.55	90 L	3530	6		86.5	86.4	84.5	0.87	3.65	3	9.6	4.9	69	81	1LE1543-0EA4■-■■■■	32	0.0031
3	3.45	100 L	3525	8.1		88.5	88.7	87.2	0.87	4.9	3.8	9.7	5.5	71	83	1LE1543-1AA4■-■■■■	36	0.0054
3.7	4.55	112 M	3560	10		88.5	88	86.2	0.88	6	3.2	10.8	5.1	73	85	1LE1543-1BA2■-■■■■	45	0.012
5.5	6.3	132 S	3555	15		89.5	89.4	88.2	0.9	8.6	2.1	8.6	4.4	72	84	1LE1543-1CA0■-■■■■	58	0.024
7.5	8.6	132 S	3555	20		90.2	90.5	90	0.91	11.5	2.4	9.5	4.7	72	84	1LE1543-1CA1■-■■■■	73	0.031
11	12.6	160 M	3560	30		91	90.4	88.4	0.88	17.2	2.8	8.5	4.3	77	89	1LE1543-1DA2■-■■■■	100	0.053
15	17.3	160 M	3565	40		91	90.5	88.9	0.86	24	3.1	9.7	4.8	77	89	1LE1543-1DA3■-■■■■	110	0.061
18.5	21.3	160 L	3560	50		91.7	91.5	90.3	0.9	28	3.1	9.4	4.4	77	89	1LE1543-1DA4■-■■■■	127	0.068
22	24.5	180 M	3560	59		91.7	91.4	90	0.89	34	2.8	8.2	3.9	77	89	1LE1543-1EA2■-■■■■	160	0.08
30	33.5	200 L	3560	80		92.4	92.2	91.4	0.87	47	2.9	7.6	3.6	77	84	1LE1543-2AA4■-■■■■	225	0.134
37	41.5	200 L	3560	99		93	92.8	91.6	0.88	57	2.8	7.5	3.6	77	84	1LE1543-2AA5■-■■■■	250	0.158
45	51	225 M	3570	120		93.6	93.7	93.1	0.88	69	2.7	7.6	3.5	75	89	1LE1543-2BA2■-■■■■	315	0.26
55	62	250 M	3578	147		93.6	93.4	92.3	0.89	83	2.5	7.3	3.3	76	90	1LE1543-2CA2■-■■■■	385	0.46
75	84	280 S	3578	200	IE2	94.1	93.9	92.7	0.89	112	2.7	7.6	3.2	78	92	1LE1543-2DA0■-■■■■	510	0.77
90	101	280 M	3578	240	IE2	95	94.8	93.8	0.9	132	2.7	8.1	3.3	78	92	1LE1543-2DA2■-■■■■	590	0.94
110	123	315 S	3585	293		95	94.8	93.8	0.91	160	2.6	8	3.3	79	93	1LE1543-3AA0■-■■■■	750	1.4
132	148	315 M	3585	352		95.4	95.1	94	0.91	191	2.8	8	3.4	79	93	1LE1543-3AA2■-■■■■	880	1.6
160	180	315 L	3588	426	IE2	95.4	95.1	93.9	0.91	230	3.2	8.8	3.5	82	96	1LE1543-3AA4■-■■■■	980	1.9
200	224	315 L	3586	533		95.8	95.7	94.8	0.92	285	3.2	8.3	3.3	82	96	1LE1543-3AA5■-■■■■	1150	2.3

Voltages		Version					Order code
50 Hz 230 VΔ/400 VY	60 Hz 460 VY	**Standard**	2	2			–
50 Hz 400 VΔ/690 VY	60 Hz 460 VΔ	**Standard**	3	4			–
50 Hz 500 VY		Without additional charge	2	7			–
50 Hz 500 VΔ		Without additional charge	4	0			–
For other voltages and more information, see from page 2/88			9	0			. . .
Types of construction		Version					Order code
Without flange	IM B3 [1]	**Standard**			A		–
With flange	IM B5 [1]	With additional charge			F		–
For other types of construction and more information, see from page 2/94					■		. . .
Motor protection		Version					Order code
Without		**Standard**				A	–
PTC thermistor with 3 temperature sensors		With additional charge				B	–
For other motor protection and more information, see from page 2/99						■	. . .
Terminal box position		Version					
Terminal box at top		**Standard**					4
For other terminal box positions and more information, see from page 2/101							■
Special versions							Order code(s)
Forced-air cooled motors w/o ext. fan/fan cover (IC 418)		1LE1543-. . . . ■-■■■■					-Z F90+. . .+. . .+. . .
For options, see from page 2/109		1LE1543-. . . . ■-■■■■					-Z . . .+. . .+. . .+. . .

[1] Types derived from IM B3 (IM B6/7/8, IM V6 and IM V5), from IM B5 (IM V3 and IM V1) and from IM B14 (IM V19 and IM V18) are possible, provided that no requirement exists for stamping of the type on the rating plate. The basic type IM B3, IM B5 or IM B14 is stamped as standard on the rating plate. If mounted in a different position, the position must be specified to ensure that the condensation drainage holes are positioned correctly.

© Siemens AG 2018

2

Selection and ordering data

Technical specifications at 60 Hz/P50 power rating

P_{rated}, 60 Hz/ P50	P_{rated}, 60 Hz/ P60	Frame size	Operating values at rated power: n_{rated}, 60 Hz	T_{rated}, 60 Hz	Different IE class 60 Hz/P60	η_{rated}, 60 Hz, 4/4	η_{rated}, 60 Hz, 3/4	η_{rated}, 60 Hz, 2/4	cos-φ_{rated}, 60 Hz, 4/4	I_{rated}, 60 Hz, 460 V	T_{LR}/T_{rated}, 60 Hz	I_{LR}/I_{rated}, 60 Hz	T_B/T_{rated}, 60 Hz	L_{pfA}, 60 Hz	L_{WA}, 60 Hz	Cast-iron series 1LE1543 – *Basic Line* Article No.	$m_{IM\ B3}$	J
kW	kW	FS	rpm	Nm		%	%	%		A				dB(A)	dB(A)	▲ New	kg	kgm^2
• Cooling: Self-ventilated (IC 411) or with order code F90 forced-air cooled without external fan and fan cover (IC 418) • Efficiency according to IEC 60034-30: IE3 Premium Efficiency • Insulation: Thermal class 155 (temperature class F), IP55 degree of protection, utilization in accordance with thermal class 130 (temperature class B)																		
4-pole: 1500 rpm at 50 Hz, 1800 rpm at 60 Hz																		
0.75	0.86	80 M	1760	4.1		83.5	82.6	79.3	0.71	1.59	3.1	8.3	4.7	55	66	1LE1543-0DB3■-■■■■	22	0.0029
1.1	1.27	90 S	1750	6		86.5	86.4	84.2	0.75	2.15	3.4	8.2	4.4	58	70	1LE1543-0EB0■-■■■■	25	0.0036
1.5	1.75	90 L	1755	8.2		86.5	86.4	84.6	0.77	2.85	3	8.4	4.3	58	70	1LE1543-0EB4■-■■■■	31	0.0049
2.2	2.55	100 L	1770	11.9		89.5	89.2	87.2	0.81	3.8	3.5	9.6	5.1	62	74	1LE1543-1AB4■-■■■■	40	0.014
3	3.45	100 L	1760	16.3		89.5	89.5	88.3	0.82	5.1	3.1	9.5	4.6	62	74	1LE1543-1AB5■-■■■■	40	0.014
4	4.55	112 M	1770	19		89.5	89.4	87.7	0.8	6.5	2.9	8.2	4.3	62	74	1LE1543-1BB2■-■■■■	46	0.017
5.5	6.3	132 S	1775	30		91.7	91.6	90.5	0.81	9.3	3.9	9.7	4.5	68	80	1LE1543-1CB0■-■■■■	74	0.046
7.5	8.6	132 M	1770	40		91.7	91.8	91	0.83	12.4	2.7	9.6	4.2	68	80	1LE1543-1CB2■-■■■■	80	0.046
11	12.6	160 M	1775	59		92.4	92.3	91.1	0.83	18	3	8.9	3.8	69	81	1LE1543-1DB2■-■■■■	109	0.083
15	17.3	160 L	1780	80		93	92.8	91.4	0.81	25	2.9	9.5	4.3	69	81	1LE1543-1DB4■-■■■■	127	0.099
18.5	21.3	180 M	1775	100		93.6	93.7	93.1	0.81	30.5	2.7	7.8	3.6	68	75	1LE1543-1EB2■-■■■■	165	0.13
22	25.3	180 L	1775	118		93.6	93.8	93.3	0.81	36.5	2.8	7.7	3.7	70	77	1LE1543-1EB4■-■■■■	170	0.14
30	34.5	200 L	1778	161	IE2	94.1	94.3	93.8	0.83	48	3	8.1	3.5	70	77	1LE1543-2AB5■-■■■■	240	0.22
37	42.5	225 S	1782	198	IE2	94.5	94.7	94.2	0.85	58	2.8	7.5	3	66	80	1LE1543-2BB0■-■■■■	285	0.42
45	52	225 M	1782	241	IE2	95	95.3	94.9	0.84	71	2.9	7.2	3	67	81	1LE1543-2BB2■-■■■■	320	0.47
55	63	250 M	1786	294	IE2	95.4	95.6	95.1	0.86	84	2.8	7.6	3.2	67	81	1LE1543-2CB2■-■■■■	420	0.85
75	86	280 S	1785	460	IE2	94.5	94.7	94.2	0.87	131	2.5	6.8	2.9	77	91	▲ 1LE1543-2DB0■-■■■■	570	1.39
90	104	280 M	1788	481	IE2	95.4	95.5	94.9	0.87	136	2.9	8	3.3	79	93	1LE1543-2DB2■-■■■■	670	1.7
110	127	315 S	1790	587		95.8	95.9	95.4	0.86	168	3	7.5	3.1	73	87	1LE1543-3AB0■-■■■■	760	2.2
132	152	315 M	1790	704		96.2	96.3	95.8	0.87	198	3.1	8.2	3.2	76	90	1LE1543-3AB2■-■■■■	960	2.9
160	184	315 L	1791	853		96.2	96.2	95.7	0.87	240	3.3	8.4	3.3	76	90	1LE1543-3AB4■-■■■■	990	3.1
200	230	315 L	1791	1066	IE2	96.2	96.2	95.5	0.87	300	3.5	8.7	3.2	78	93	1LE1543-3AB5■-■■■■	1190	3.7

Voltages		Version			Order code
50 Hz 230 VΔ/400 VY	60 Hz 460 VY	**Standard**	2	2	–
50 Hz 400 VΔ/690 VY	60 Hz 460 VΔ	**Standard**	3	4	–
50 Hz 500 VY		Without additional charge	2	7	–
50 Hz 500 VΔ		Without additional charge	4	0	–
For other voltages and more information, see from page 2/88			9	0	. . .

Types of construction		Version		Order code
Without flange	IM B3 [1]	**Standard**	A	–
With flange	IM B5 [1]	With additional charge	F	–
For other types of construction and more information, see from page 2/94			■	. . .

Motor protection	Version		Order code
Without	**Standard**	A	–
PTC thermistor with 3 temperature sensors	With additional charge	B	–
For other motor protection and more information, see from page 2/99		■	. . .

Terminal box position	Version		
Terminal box at top	**Standard**	4	
For other terminal box positions and more information, see from page 2/101		■	

Special versions		Order code(s)
Forced-air cooled motors w/o ext. fan/fan cover (IC 418)	1LE1543- . . . . ■-■■■■ -Z	F90+. . .+. . .+. . .
For options, see from page 2/109	1LE1543- . . . . ■-■■■■ -Z	. . .+. . .+. . .+. . .

[1] Types derived from IM B3 (IM B6/7/8, IM V6 and IM V5), from IM B5 (IM V3 and IM V1) and from IM B14 (IM V19 and IM V18) are possible, provided that no requirement exists for stamping of the type on the rating plate. The basic type IM B3, IM B5 or IM B14 is stamped as standard on the rating plate. If mounted in a different position, the position must be specified to ensure that the condensation drainage holes are positioned correctly.

© Siemens AG 2018

Selection and ordering data

Technical specifications at 60 Hz/P50 power rating

			Operating values at rated power													Cast-iron series 1LE1543 – Basic Line		
P_{rated}, 60 Hz/P50	P_{rated}, 60 Hz/P60	Frame size	n_{rated}, 60 Hz	T_{rated}, 60 Hz	Different IE class 60 Hz/P60	η_{rated}, 60 Hz, 4/4	η_{rated}, 60 Hz, 3/4	η_{rated}, 60 Hz, 2/4	cos-φ_{rated}, 60 Hz, 4/4	I_{rated}, 60 Hz, 460 V	T_{LR}/T_{rated}, 60 Hz	I_{LR}/I_{rated}, 60 Hz	T_B/T_{rated}, 60 Hz	L_{pfA}, 60 Hz	L_{WA}, 60 Hz	Article No.	$m_{IM\ B3}$	J
kW	kW	FS	rpm	Nm		%	%	%		A				dB(A)	dB(A)		kg	kgm²
• Cooling: Self-ventilated (IC 411) or with order code F90 forced-air cooled without external fan and fan cover (IC 418) • Efficiency according to IEC 60034-30: IE3 Premium Efficiency • Insulation: Thermal class 155 (temperature class F), IP55 degree of protection, utilization in accordance with thermal class 130 (temperature class B)																		
6-pole: 1000 rpm at 50 Hz, 1200 rpm at 60 Hz																		
0.75	0.86	90 S	1155	6.2		82.5	82.4	79.9	0.65	3.05	2.4	5.3	3.1	46	58	1LE1543-0EC0■-■■■■	27	0.004
1.1	1.27	100 L	1180	8.9		87.5	87.2	84.8	0.69	2.3	2.4	6.7	3.3	62	74	1LE1543-1AC3■-■■■■	25	0.011
1.5	1.75	112 M	1175	12		88.5	88.3	86.2	0.73	2.9	2.2	6.9	3.2	65	77	1LE1543-1BC1■-■■■■	53	0.017
2.2	2.55	132 S	1185	18		89.5	89.3	87.7	0.74	4.15	2.3	8	3.5	67	79	1LE1543-1CC1■-■■■■	61	0.037
3	3.45	132 S	1185	24		89.5	89.6	88.4	0.75	5.6	2.3	7.5	3.3	67	79	1LE1543-1CC0■-■■■■	70	0.037
4	4.55	132 M	1175	30		89.5	89.6	88.4	0.73	7.1	2.4	7.6	3.4	67	79	1LE1543-1CC2■-■■■■	70	0.037
5.5	6.3	132 M	1180	45		91	91.4	90.5	0.74	10.3	2.3	7.2	3.3	67	79	1LE1543-1CC3■-■■■■	83	0.037
7.5	8.6	160 M	1185	60		91	91.1	90	0.75	13.8	2.4	5.9	2.6	70	82	1LE1543-1DC2■-■■■■	122	0.098
11	12.6	160 L	1180	89		91.7	91.9	91	0.75	20	2.3	5.8	2.6	70	82	1LE1543-1DC4■-■■■■	147	0.12
15	18	180 L	1178	122	IE2	91.7	92	91.4	0.79	26	2.5	6.8	3	61	68	1LE1543-1EC4■-■■■■	180	0.19
18.5	22	200 L	1180	150	IE2	93	93.8	93.8	0.78	32	2.8	6.5	3	64	71	1LE1543-2AC4■-■■■■	215	0.28
22	26.5	200 L	1180	178	IE2	93	93.5	93.4	0.79	37.5	2.6	6.3	2.8	63	70	1LE1543-2AC5■-■■■■	230	0.32
37	44.5	250 M	1188	297	IE2	94.1	94.4	93.9	0.83	59	3.1	8	3.1	63	76	1LE1543-2CC2■-■■■■	405	1
45	54	280 S	1190	361	IE2	94.5	94.6	94.1	0.83	72	3.3	7.7	3.1	66	80	1LE1543-2DC0■-■■■■	510	1.4
55	66	280 M	1190	441	IE2	94.5	94.6	94	0.83	88	3.6	7.9	3.3	66	80	1LE1543-2DC2■-■■■■	560	1.6
75	90	315 S	1192	601		95	94.9	94.1	0.82	121	3.1	8.4	3.3	64	79	1LE1543-3AC0■-■■■■	750	2.6
90	108	315 M	1192	721	IE2	95	95	94.4	0.84	142	2.7	7.7	3	64	79	1LE1543-3AC2■-■■■■	890	3.1
110	132	315 L	1192	881	IE2	95.8	95.9	95.5	0.83	174	3.2	8.2	3.4	64	79	1LE1543-3AC4■-■■■■	990	3.9
132	158	315 L	1192	1057	IE2	95.8	96	95.6	0.84	205	3.1	8.4	3.3	65	80	1LE1543-3AC5■-■■■■	1110	4.4

Voltages		Version					Order code
50 Hz 230 VΔ/400 VY	60 Hz 460 VY	**Standard**	**2**	**2**			–
50 Hz 400 VΔ/690 VY	60 Hz 460 VΔ	**Standard**	**3**	**4**			–
50 Hz 500 VY		Without additional charge	**2**	**7**			–
50 Hz 500 VΔ		Without additional charge	**4**	**0**			–
For other voltages and more information, see from page 2/88			**9**	**0**			. . .
Types of construction		Version					Order code
Without flange	IM B3 [1]	**Standard**			**A**		–
With flange	IM B5 [1]	With additional charge			**F**		–
For other types of construction and more information, see from page 2/94					■		. . .
Motor protection		Version					Order code
Without		**Standard**				**A**	–
PTC thermistor with 3 temperature sensors		With additional charge				**B**	–
For other motor protection and more information, see from page 2/99						■	. . .
Terminal box position		Version					
Terminal box at top		**Standard**					**4**
For other terminal box positions and more information, see from page 2/101							■
Special versions							Order code(s)
Forced-air cooled motors w/o ext. fan/fan cover (IC 418)		1LE1543-. . . . ■-■■■■ -Z					F90+. . .+. . .+. . .
For options, see from page 2/109		1LE1543-. . . . ■-■■■■ -Z					. . .+. . .+. . .+. . .

[1] Types derived from IM B3 (IM B6/7/8, IM V6 and IM V5), from IM B5 (IM V3 and IM V1) and from IM B14 (IM V19 and IM V18) are possible, provided that no requirement exists for stamping of the type on the rating plate. The basic type IM B3, IM B5 or IM B14 is stamped as standard on the rating plate. If mounted in a different position, the position must be specified to ensure that the condensation drainage holes are positioned correctly.

© Siemens AG 2018

2

Selection and ordering data

Technical specifications at 60 Hz/P50 power rating

P_{rated}, 60 Hz/ P50	P_{rated}, 60 Hz/ P60	Frame size	Operating values at rated power: n_{rated}, 60 Hz	T_{rated}, 60 Hz	Different IE class 60 Hz/P60	η_{rated}, 60 Hz, 4/4	η_{rated}, 60 Hz, 3/4	η_{rated}, 60 Hz, 2/4	cos-φ_{rated}, 60 Hz, 4/4	I_{rated}, 60 Hz, 460 V	T_{LR}/T_{rated}, 60 Hz	I_{LR}/I_{rated}, 60 Hz	T_B/T_{rated}, 60 Hz	L_{pfA}, 60 Hz	L_{WA}, 60 Hz	Cast-iron series 1LE1643 – *Performance Line* Article No.	$m_{IM\ B3}$	J
kW	kW	FS	rpm	Nm		%	%	%		A				dB(A)	dB(A)		kg	kgm^2
• Cooling: Self-ventilated (IC 411) or with order code F90 forced-air cooled without external fan and fan cover (IC 418) • Efficiency according to IEC 60034-30: IE3 Premium Efficiency • Insulation: Thermal class 155 (temperature class F), IP55 degree of protection, utilization in accordance with thermal class 130 (temperature class B)																		
2-pole: 3000 rpm at 50 Hz, 3600 rpm at 60 Hz																		
0.75	**0.86**	**80 M**	3480	2.1		77	77.2	75.7	0.84	1.45	3	7.1	3.6	64	75	**1LE1643-0DA2■-■■■■**	18	0.0011
1.1	**1.27**	**80 M**	3500	3		84	84	82	0.83	1.98	3.3	8.4	4	64	75	**1LE1643-0DA3■-■■■■**	21	0.0013
1.5	**1.75**	**90 S**	3525	4.1		85.5	84.8	82.3	0.84	2.6	3.1	9.8	4.9	69	81	**1LE1643-0EA0■-■■■■**	26	0.0021
2.2	**2.55**	**90 L**	3530	6		86.5	86.4	84.5	0.87	3.65	3	9.6	4.9	69	81	**1LE1643-0EA4■-■■■■**	32	0.0031
3	**3.45**	**100 L**	3525	8.1		88.5	88.7	87.2	0.87	4.9	3.8	9.7	5.5	71	83	**1LE1643-1AA4■-■■■■**	36	0.0054
3.7	**4.55**	**112 M**	3560	10		88.5	88	86.2	0.88	6	3.2	10.8	5.1	73	85	**1LE1643-1BA2■-■■■■**	45	0.012
5.5	**6.3**	**132 S**	3555	15		89.5	89.4	88.2	0.9	8.6	2.1	8.6	4.4	72	84	**1LE1643-1CA0■-■■■■**	58	0.024
7.5	**8.6**	**132 S**	3555	20		90.2	90.5	90	0.91	11.5	2.4	9.5	4.7	72	84	**1LE1643-1CA1■-■■■■**	73	0.031
11	**12.6**	**160 M**	3560	30		91	90.4	88.4	0.88	17.2	2.8	8.5	4.3	77	89	**1LE1643-1DA2■-■■■■**	100	0.053
15	**17.3**	**160 M**	3565	40		91	90.5	88.9	0.86	24	3.1	9.7	4.8	77	89	**1LE1643-1DA3■-■■■■**	110	0.061
18.5	**21.3**	**160 L**	3560	50		91.7	91.5	90.3	0.9	28	3.1	9.4	4.4	77	89	**1LE1643-1DA4■-■■■■**	127	0.068
22	**24.5**	**180 M**	3560	59		91.7	91.4	90	0.89	34	2.8	8.2	3.9	77	89	**1LE1643-1EA2■-■■■■**	160	0.08
30	**33.5**	**200 L**	3560	80		92.4	92.2	91.4	0.87	47	2.9	7.6	3.6	77	84	**1LE1643-2AA4■-■■■■**	225	0.134
37	**41.5**	**200 L**	3560	99		93	92.8	91.6	0.88	57	2.8	7.5	3.6	77	84	**1LE1643-2AA5■-■■■■**	250	0.158
45	**51**	**225 M**	3570	120		93.6	93.7	93.1	0.88	69	2.7	7.6	3.5	75	89	**1LE1643-2BA2■-■■■■**	315	0.26
55	**62**	**250 M**	3578	147		93.6	93.4	92.3	0.89	83	2.5	7.3	3.3	76	90	**1LE1643-2CA2■-■■■■**	385	0.46
75	**84**	**280 S**	3578	200	IE2	94.1	93.9	92.7	0.89	112	2.7	7.6	3.2	78	92	**1LE1643-2DA0■-■■■■**	510	0.77
90	**101**	**280 M**	3578	240	IE2	95	94.8	93.8	0.9	132	2.7	8.1	3.3	78	92	**1LE1643-2DA2■-■■■■**	590	0.94
110	**123**	**315 S**	3585	293		95	94.8	93.8	0.91	160	2.6	8	3.3	79	93	**1LE1643-3AA0■-■■■■**	750	1.4
132	**148**	**315 M**	3585	352		95.4	95.1	94	0.91	191	2.8	8	3.4	79	93	**1LE1643-3AA2■-■■■■**	880	1.6
160	**180**	**315 L**	3588	426	IE2	95.4	95.1	93.9	0.91	230	3.2	8.8	3.5	82	96	**1LE1643-3AA4■-■■■■**	980	1.9
200	**224**	**315 L**	3586	533		95.8	95.7	94.8	0.92	285	3.2	8.3	3.3	82	96	**1LE1643-3AA5■-■■■■**	1150	2.3

Voltages		Version			Order code
50 Hz 230 VΔ/400 VY	60 Hz 460 VY	**Standard**	**2**	**2**	–
50 Hz 400 VΔ/690 VY	60 Hz 460 VΔ	**Standard**	**3**	**4**	–
50 Hz 500 VY		Without additional charge	**2**	**7**	–
50 Hz 500 VΔ		Without additional charge	**4**	**0**	–
For other voltages and more information, see from page 2/88			**9**	**0**	. . .

Types of construction		Version		Order code
Without flange	IM B3 [1]	**Standard**	**A**	–
With flange	IM B5 [1]	With additional charge	**F**	–
For other types of construction and more information, see from page 2/94			■	. . .

Motor protection	Version		Order code
PTC thermistor with 3 temperature sensors	**Standard**	**B**	–
For other motor protection and more information, see from page 2/99		■	. . .

Terminal box position	Version		
Terminal box at top	**Standard**	**4**	
For other terminal box positions and more information, see from page 2/101		■	

Special versions		Order code(s)
Forced-air cooled motors w/o ext. fan/fan cover (IC 418)	**1LE1643- . . . . ■-■■■■** **-Z**	**F90+. . .+. . .+. . .**
For options, see from page 2/109	**1LE1643- . . . . ■-■■■■** **-Z**	**. . .+. . .+. . .+. . .**

[1] Types derived from IM B3 (IM B6/7/8, IM V6 and IM V5), from IM B5 (IM V3 and IM V1) and from IM B14 (IM V19 and IM V18) are possible, provided that no requirement exists for stamping of the type on the rating plate. The basic type IM B3, IM B5 or IM B14 is stamped as standard on the rating plate. If mounted in a different position, the position must be specified to ensure that the condensation drainage holes are positioned correctly.

© Siemens AG 2018

Selection and ordering data

Technical specifications at 60 Hz/P50 power rating

P_{rated}, 60 Hz/P50	P_{rated}, 60 Hz/P60	Frame size	Operating values at rated power: n_{rated}, 60 Hz	T_{rated}, 60 Hz	Different IE class 60 Hz/P60	η_{rated}, 60 Hz, 4/4	η_{rated}, 60 Hz, 3/4	η_{rated}, 60 Hz, 2/4	cos-φ_{rated}, 60 Hz, 4/4	I_{rated}, 60 Hz, 460 V	T_{LR}/T_{rated}, 60 Hz	I_{LR}/I_{rated}, 60 Hz	T_B/T_{rated}, 60 Hz	L_{pfA}, 60 Hz	L_{WA}, 60 Hz	Cast-iron series 1LE1643 – Performance Line, Article No.	$m_{IM\ B3}$	J
kW	kW	FS	rpm	Nm		%	%	%		A				dB(A)	dB(A)	▲ New	kg	kgm^2
• Cooling: Self-ventilated (IC 411) or with order code F90 forced-air cooled without external fan and fan cover (IC 418) • Efficiency according to IEC 60034-30: IE3 Premium Efficiency • Insulation: Thermal class 155 (temperature class F), IP55 degree of protection, utilization in accordance with thermal class 130 (temperature class B)																		
4-pole: 1500 rpm at 50 Hz, 1800 rpm at 60 Hz																		
3	3.45	100 L	1760	16.3		89.5	89.5	88.3	0.82	5.1	3.1	9.5	4.6	62	74	1LE1643-1AB5■-■■■■	40	0.014
4	4.55	112 M	1770	19		89.5	89.4	87.7	0.8	6.5	2.9	8.2	4.3	62	74	1LE1643-1BB2■-■■■■	46	0.017
5.5	6.3	132 S	1775	30		91.7	91.6	90.5	0.81	9.3	3.9	9.7	4.5	68	80	1LE1643-1CB0■-■■■■	74	0.046
7.5	8.6	132 M	1770	40		91.7	91.8	91	0.83	12.4	2.7	9.6	4.2	68	80	1LE1643-1CB2■-■■■■	80	0.046
11	12.6	160 M	1775	59		92.4	92.3	91.1	0.83	18	3	8.9	3.8	69	81	1LE1643-1DB2■-■■■■	109	0.083
15	17.3	160 L	1780	80		93	92.8	91.4	0.81	25	2.9	9.5	4.3	69	81	1LE1643-1DB4■-■■■■	127	0.099
18.5	21.3	180 M	1775	100		93.6	93.7	93.1	0.81	30.5	2.7	7.8	3.6	68	75	1LE1643-1EB2■-■■■■	165	0.13
22	25.3	180 L	1775	118		93.6	93.8	93.3	0.81	36.5	2.8	7.7	3.7	70	77	1LE1643-1EB4■-■■■■	170	0.14
30	34.5	200 L	1778	161	IE2	94.1	94.3	93.8	0.83	48	3	8.1	3.5	70	77	1LE1643-2AB5■-■■■■	240	0.22
37	42.5	225 S	1782	198	IE2	94.5	94.7	94.2	0.85	58	2.8	7.5	3	66	80	1LE1643-2BB0■-■■■■	285	0.42
45	52	225 M	1782	241	IE2	95	95.3	94.9	0.84	71	2.9	7.2	3	67	81	1LE1643-2BB2■-■■■■	320	0.47
55	63	250 M	1786	294	IE2	95.4	95.6	95.1	0.86	84	2.8	7.6	3.2	67	81	1LE1643-2CB2■-■■■■	420	0.85
75	86	280 S	1785	460	IE2	94.5	94.7	94.2	0.87	131	2.5	6.8	2.9	77	91	▲ 1LE1643-2DB0■-■■■■	570	1.39
90	104	280 M	1788	481	IE2	95.4	95.5	94.9	0.87	136	2.9	8	3.3	79	93	1LE1643-2DB2■-■■■■	670	1.7
110	127	315 S	1790	587		95.8	95.9	95.4	0.86	168	3	7.5	3.1	73	87	1LE1643-3AB0■-■■■■	760	2.2
132	152	315 M	1790	704		96.2	96.3	95.8	0.87	198	3.1	8.2	3.2	76	90	1LE1643-3AB2■-■■■■	960	2.9
160	184	315 L	1791	853		96.2	96.2	95.7	0.87	240	3.3	8.4	3.3	76	90	1LE1643-3AB4■-■■■■	990	3.1
200	230	315 L	1791	1066	IE2	96.2	96.2	95.5	0.87	300	3.5	8.7	3.2	78	93	1LE1643-3AB5■-■■■■	1190	3.7

Voltages		Version						Order code
50 Hz 230 VΔ/400 VY	60 Hz 460 VY	**Standard**	2	2				–
50 Hz 400 VΔ/690 VY	60 Hz 460 VΔ	**Standard**	3	4				–
50 Hz 500 VY		Without additional charge	2	7				–
50 Hz 500 VΔ		Without additional charge	4	0				–
For other voltages and more information, see from page 2/88			9	0				. . .
Types of construction		Version						Order code
Without flange	IM B3 [1]	**Standard**			A			–
With flange	IM B5 [1]	With additional charge			F			–
For other types of construction and more information, see from page 2/94					■			. . .
Motor protection		Version						Order code
PTC thermistor with 3 temperature sensors		**Standard**				B		–
For other motor protection and more information, see from page 2/99						■		. . .
Terminal box position		Version						
Terminal box at top		**Standard**					4	
For other terminal box positions and more information, see from page 2/101							■	
Special versions								Order code(s)
Forced-air cooled motors w/o ext. fan/fan cover (IC 418)		1LE1643-. . . . ■-■■■■ -Z						F90+. . .+. . .+. . .
For options, see from page 2/109		1LE1643-. . . . ■-■■■■ -Z						. . .+. . .+. . .+. . .

[1] Types derived from IM B3 (IM B6/7/8, IM V6 and IM V5), from IM B5 (IM V3 and IM V1) and from IM B14 (IM V19 and IM V18) are possible, provided that no requirement exists for stamping of the type on the rating plate. The basic type IM B3, IM B5 or IM B14 is stamped as standard on the rating plate. If mounted in a different position, the position must be specified to ensure that the condensation drainage holes are positioned correctly.

© Siemens AG 2018

2

Selection and ordering data

Technical specifications at 60 Hz/P50 power rating

P_{rated}, 60 Hz/ P50	P_{rated}, 60 Hz/ P60	Frame size	Operating values at rated power: n_{rated}, 60 Hz	T_{rated}, 60 Hz	Different IE class 60 Hz/P60	η_{rated}, 60 Hz, 4/4	η_{rated}, 60 Hz, 3/4	η_{rated}, 60 Hz, 2/4	cos-φ_{rated}, 60 Hz, 4/4	I_{rated}, 60 Hz, 460 V	T_{LR}/T_{rated}, 60 Hz	I_{LR}/I_{rated}, 60 Hz	T_B/T_{rated}, 60 Hz	L_{pfA}, 60 Hz	L_{WA}, 60 Hz	Cast-iron series 1LE1643 – Performance Line, Article No.	$m_{IM\ B3}$	J
kW	kW	FS	rpm	Nm		%	%	%		A				dB(A)	dB(A)		kg	kgm^2
• Cooling: Self-ventilated (IC 411) or with order code F90 forced-air cooled without external fan and fan cover (IC 418) • Efficiency according to IEC 60034-30: IE3 Premium Efficiency • Insulation: Thermal class 155 (temperature class F), IP55 degree of protection, utilization in accordance with thermal class 130 (temperature class B)																		
6-pole: 1000 rpm at 50 Hz, 1200 rpm at 60 Hz																		
1.1	1.27	100 L	1180	8.9		87.5	87.2	84.8	0.69	2.3	2.4	6.7	3.3	62	74	1LE1643-1AC3■-■■■■	25	0.011
1.5	1.75	112 M	1175	12		88.5	88.3	86.2	0.73	2.9	2.2	6.9	3.2	65	77	1LE1643-1BC1■-■■■■	53	0.017
2.2	2.55	132 S	1185	18		89.5	89.3	87.7	0.74	4.15	2.3	8	3.5	67	79	1LE1643-1CC1■-■■■■	61	0.037
3	3.45	132 S	1185	24		89.5	89.6	88.4	0.75	5.6	2.3	7.5	3.3	67	79	1LE1643-1CC0■-■■■■	70	0.037
4	4.55	132 M	1175	30		89.5	89.6	88.4	0.73	7.1	2.4	7.6	3.4	67	79	1LE1643-1CC2■-■■■■	70	0.037
5.5	6.3	132 M	1180	45		91	91.4	90.5	0.74	10.3	2.3	7.2	3.3	67	79	1LE1643-1CC3■-■■■■	83	0.037
7.5	8.6	160 M	1185	60		91	91.1	90	0.75	13.8	2.4	5.9	2.6	70	82	1LE1643-1DC2■-■■■■	122	0.098
11	12.6	160 L	1180	89		91.7	91.9	91	0.75	20	2.3	5.8	2.6	70	82	1LE1643-1DC4■-■■■■	147	0.12
15	18	180 L	1178	122	IE2	91.7	92	91.4	0.79	26	2.5	6.8	3	61	68	1LE1643-1EC4■-■■■■	180	0.19
18.5	22	200 L	1180	150	IE2	93	93.8	93.8	0.78	32	2.8	6.5	3	64	71	1LE1643-2AC4■-■■■■	215	0.28
22	26.5	200 L	1180	178	IE2	93	93.5	93.4	0.79	37.5	2.6	6.3	2.8	63	70	1LE1643-2AC5■-■■■■	230	0.32
37	44.5	250 M	1188	297	IE2	94.1	94.4	93.9	0.83	59	3.1	8	3.1	63	76	1LE1643-2CC2■-■■■■	405	1
45	54	280 S	1190	361	IE2	94.5	94.6	94.1	0.83	72	3.3	7.7	3.1	66	80	1LE1643-2DC0■-■■■■	510	1.4
55	66	280 M	1190	441	IE2	94.5	94.6	94	0.83	88	3.6	7.9	3.3	66	80	1LE1643-2DC2■-■■■■	560	1.6
75	90	315 S	1192	601		95	94.9	94.1	0.82	121	3.1	8.4	3.3	64	79	1LE1643-3AC0■-■■■■	750	2.6
90	108	315 M	1192	721	IE2	95	95	94.4	0.84	142	2.7	7.7	3	64	79	1LE1643-3AC2■-■■■■	890	3.1
110	132	315 L	1192	881	IE2	95.8	95.9	95.5	0.83	174	3.2	8.2	3.4	64	79	1LE1643-3AC4■-■■■■	990	3.9
132	158	315 L	1192	1057	IE2	95.8	96	95.6	0.84	205	3.1	8.4	3.3	65	80	1LE1643-3AC5■-■■■■	1110	4.4

Voltages		Version						Order code
50 Hz 230 VΔ/400 VY	60 Hz 460 VY	**Standard**	2	2				–
50 Hz 400 VΔ/690 VY	60 Hz 460 VΔ	**Standard**	3	4				–
50 Hz 500 VY		Without additional charge	2	7				–
50 Hz 500 VΔ		Without additional charge	4	0				–
For other voltages and more information, see from page 2/88			9	0				. . .
Types of construction		Version						Order code
Without flange	IM B3 [1]	**Standard**			A			–
With flange	IM B5 [1]	With additional charge			F			–
For other types of construction and more information, see from page 2/94					■			. . .
Motor protection		Version						Order code
PTC thermistor with 3 temperature sensors		**Standard**				B		–
For other motor protection and more information, see from page 2/99						■		. . .
Terminal box position		Version						
Terminal box at top		**Standard**					4	
For other terminal box positions and more information, see from page 2/101							■	
Special versions								Order code(s)
Forced-air cooled motors w/o ext. fan/fan cover (IC 418)		1LE1643-. . . . ■-■■■■-Z						F90+. . .+. . .+. . .
For options, see from page 2/109		1LE1643-. . . . ■-■■■■-Z						. . .+. . .+. . .+. . .

[1] Types derived from IM B3 (IM B6/7/8, IM V6 and IM V5), from IM B5 (IM V3 and IM V1) and from IM B14 (IM V19 and IM V18) are possible, provided that no requirement exists for stamping of the type on the rating plate. The basic type IM B3, IM B5 or IM B14 is stamped as standard on the rating plate. If mounted in a different position, the position must be specified to ensure that the condensation drainage holes are positioned correctly.

© Siemens AG 2018

Selection and ordering data

Technical specifications at 60 Hz/P50 power rating

P_{rated}, 60 Hz/ P50	P_{rated}, 60 Hz/ P60	Frame size	Operating values at rated power: n_{rated}, 60 Hz	T_{rated}, 60 Hz	Different IE class 60 Hz/P60	η_{rated}, 60 Hz, 4/4	η_{rated}, 60 Hz, 3/4	η_{rated}, 60 Hz, 2/4	cos-φ_{rated}, 60 Hz, 4/4	I_{rated}, 60 Hz, 460 V	T_{LR}/T_{rated}, 60 Hz	I_{LR}/I_{rated}, 60 Hz	T_B/T_{rated}, 60 Hz	L_{pfA}, 60 Hz	L_{WA}, 60 Hz	Cast-iron series 1LE1543 – *Basic Line* Article No.	$m_{IM\ B3}$	J
kW	kW	FS	rpm	Nm		%	%	%		A				dB(A)	dB(A)	▲ New	kg	kgm^2
• Cooling: Self-ventilated (IC 411) or with order code F90 forced-air cooled without external fan and fan cover (IC 418) • Efficiency according to IEC 60034-30: IE3 Premium Efficiency • Insulation: Thermal class 155 (temperature class F), IP55 degree of protection, utilization in accordance with thermal class 130 (temperature class B)																		
2-pole: 3000 rpm at 50 Hz, 3600 rpm at 60 Hz																		
4	4.55	100 L	3500	12		88.5	89.6	89.5	0.89	7.3	3	8.4	4	71	83	▲ 1LE1543-1AA6■-■■■■	37	0.0054
11	12.6	132 M	3565	29		91	91.1	90.3	0.86	17.6	2.5	9.6	5.2	72	84	1LE1543-1CA6■-■■■■	75	0.031
15	17.3	132 M	3560	40		91	91.1	90.2	0.87	24	2.7	9.9	5.5	72	84	1LE1543-1CA7■-■■■■	85	0.035
22	25.3	160 L	3560	59		91.7	91.8	90.9	0.9	33.5	3.1	9.7	4.5	77	89	1LE1543-1DA6■-■■■■	148	0.073
30	33.5	180 L	3560	80		92.4	92.6	92.1	0.87	47	2.9	8.8	4.5	77	89	1LE1543-1EA6■-■■■■	180	0.094
45	51	200 L	3560	121		93.6	93.7	93	0.86	70	3	8.4	3.7	77	84	1LE1543-2AA6■-■■■■	245	0.17
55	62	225 M	3570	147		93.6	93.6	92.8	0.88	84	3.2	8.9	4	76	89	1LE1543-2BA6■-■■■■	370	0.31
75	84	250 M	3575	200		94.1	93.9	92.9	0.9	111	2.5	7.5	3.2	82	96	1LE1543-2CA6■-■■■■	455	0.56
110	123	280 M	3578	294		95	94.8	94	0.91	160	2.9	8.5	3.5	82	96	1LE1543-2DA6■-■■■■	660	1.1
4-pole: 1500 rpm at 50 Hz, 1800 rpm at 60 Hz																		
11	12.6	132 M	1775	59		92.4	92.6	91.8	0.79	19	3.1	8.7	4.1	68	80	1LE1543-1CB6■-■■■■	82	0.046
18.5	21.3	160 L	1780	99		93.6	93.3	91.9	0.75	33	3.9	9.6	4.5	69	81	1LE1543-1DB6■-■■■■	140	0.099
30	34.5	180 L	1775	161	IE2	94.1	94.4	94	0.78	51	3.1	8.8	4.1	70	77	1LE1543-1EB6■-■■■■	192	0.173
37	42.5	200 L	1780	198		94.5	94.7	94.2	0.8	61	3.3	9	4	70	77	1LE1543-2AB6■-■■■■	258	0.275
55	63	225 M	1782	295	IE2	95.4	95.7	95.4	0.85	85	3.1	7.4	3	75	89	1LE1543-2BB6■-■■■■	405	0.65
75	86	250 M	1788	401		95.4	95.4	94.8	0.84	117	3.4	8.8	3.8	75	89	1LE1543-2CB6■-■■■■	510	1.1
110	127	280 M	1788	587	IE2	95.8	95.7	94.9	0.85	170	3.4	9.2	3.7	82	96	1LE1543-2DB6■-■■■■	710	1.8
6-pole: 1000 rpm at 50 Hz, 1200 rpm at 60 Hz																		
18.5	22	180 L	1180	150		93	93.2	92.6	0.75	33.5	2.9	7.9	3.7	69	81	1LE1543-1EC6■-■■■■	185	0.247
30	36	200 L	1182	242	IE2	94.1	94.5	94.2	0.77	52	3.2	7.6	3.2	63	70	1LE1543-2AC6■-■■■■	270	0.434
37	44.5	225 M	1186	298	IE2	94.1	94.3	93.7	0.8	62	3.3	8.2	3.5	71	85	1LE1543-2BC6■-■■■■	395	0.84
45	54	250 M	1188	362	IE2	94.5	94.7	94.2	0.83	72	2.8	8.1	3.2	69	83	1LE1543-2CC6■-■■■■	480	1.3
75	90	280 M	1190	602		95	95.1	94.6	0.82	121	4.2	9.5	3.6	70	84	1LE1543-2DC6■-■■■■	630	1.9
160	192	315 L	1192	1282	IE2	95.8	95.7	95	0.82	255	3.3	9	3.8	69	83	1LE1543-3AC6■-■■■■	1160	4.6

Voltages		Version					Order code
50 Hz 230 VΔ/400 VY	60 Hz 460 VY	**Standard**	2	2			–
50 Hz 400 VΔ/690 VY	60 Hz 460 VΔ	**Standard**	3	4			–
50 Hz 500 VY		Without additional charge	2	7			–
50 Hz 500 VΔ		Without additional charge	4	0			–
For other voltages and more information, see from page 2/88			9	0			. . .
Types of construction		Version					Order code
Without flange	IM B3 [1]	**Standard**			A		–
With flange	IM B5 [1]	With additional charge			F		–
For other types of construction and more information, see from page 2/94					■		. . .
Motor protection		Version					Order code
Without		**Standard**				A	–
PTC thermistor with 3 temperature sensors		With additional charge				B	–
For other motor protection and more information, see from page 2/99						■	. . .
Terminal box position		Version					
Terminal box at top		**Standard**					4
For other terminal box positions and more information, see from page 2/101							■
Special versions							Order code(s)
For options, see from page 2/109		1LE1543-. . . . ■-■■■■-Z					. . .+. . .+. . .+. . .

[1] Types derived from IM B3 (IM B6/7/8, IM V6 and IM V5), from IM B5 (IM V3 and IM V1) and from IM B14 (IM V19 and IM V18) are possible, provided that no requirement exists for stamping of the type on the rating plate. The basic type IM B3, IM B5 or IM B14 is stamped as standard on the rating plate. If mounted in a different position, the position must be specified to ensure that the condensation drainage holes are positioned correctly.

© Siemens AG 2018

2

Selection and ordering data

Technical specifications at 60 Hz/P50 power rating

P_{rated}, 60 Hz/ P50	P_{rated}, 60 Hz/ P60	Frame size	Operating values at rated power: n_{rated}, 60 Hz	T_{rated}, 60 Hz	Different IE class 60 Hz/P60	η_{rated}, 60 Hz, 4/4	η_{rated}, 60 Hz, 3/4	η_{rated}, 60 Hz, 2/4	cos-φ_{rated}, 60 Hz, 4/4	I_{rated}, 60 Hz, 460 V	T_{LR}/T_{rated}, 60 Hz	I_{LR}/I_{rated}, 60 Hz	T_B/T_{rated}, 60 Hz	L_{pfA}, 60 Hz	L_{WA}, 60 Hz	Cast-iron series 1LE1643 – Performance Line Article No.	$m_{IM\ B3}$	J
kW	kW	FS	rpm	Nm		%	%	%		A				dB(A)	dB(A)	▲ New	kg	kgm²
• Cooling: Self-ventilated (IC 411) or with order code F90 forced-air cooled without external fan and fan cover (IC 418) • Efficiency according to IEC 60034-30: IE3 Premium Efficiency • Insulation: Thermal class 155 (temperature class F), IP55 degree of protection, utilization in accordance with thermal class 130 (temperature class B)																		
2-pole: 3000 rpm at 50 Hz, 3600 rpm at 60 Hz																		
4	**4.55**	**100 L**	3500	12		88.5	89.6	89.5	0.89	7.3	3	8.4	4	71	83	▲ **1LE1643-1AA6■-■■■■**	37	0.0054
11	**12.6**	**132 M**	3565	29		91	91.1	90.3	0.86	17.6	2.5	9.6	5.2	72	84	**1LE1643-1CA6■-■■■■**	75	0.031
15	**17.3**	**132 M**	3560	40		91	91.1	90.2	0.87	24	2.7	9.9	5.5	72	84	**1LE1643-1CA7■-■■■■**	85	0.035
22	**25.3**	**160 L**	3560	59		91.7	91.8	90.9	0.9	33.5	3.1	9.7	4.5	77	89	**1LE1643-1DA6■-■■■■**	148	0.073
30	**33.5**	**180 L**	3560	80		92.4	92.6	92.1	0.87	47	2.9	8.8	4.5	77	89	**1LE1643-1EA6■-■■■■**	180	0.094
45	**51**	**200 L**	3560	121		93.6	93.7	93	0.86	70	3	8.4	3.7	77	84	**1LE1643-2AA6■-■■■■**	245	0.17
55	**62**	**225 M**	3570	147		93.6	93.6	92.8	0.88	84	3.2	8.9	4	76	89	**1LE1643-2BA6■-■■■■**	370	0.31
75	**84**	**250 M**	3575	200		94.1	93.9	92.9	0.9	111	2.5	7.5	3.2	82	96	**1LE1643-2CA6■-■■■■**	455	0.56
110	**123**	**280 M**	3578	294		95	94.8	94	0.91	160	2.9	8.5	3.5	82	96	**1LE1643-2DA6■-■■■■**	660	1.1
4-pole: 1500 rpm at 50 Hz, 1800 rpm at 60 Hz																		
11	**12.6**	**132 M**	1775	59		92.4	92.6	91.8	0.79	19	3.1	8.7	4.1	68	80	**1LE1643-1CB6■-■■■■**	82	0.046
18.5	**21.3**	**160 L**	1780	99		93.6	93.3	91.9	0.75	33	3.9	9.6	4.5	69	81	**1LE1643-1DB6■-■■■■**	140	0.099
30	**34.5**	**180 L**	1775	161	IE2	94.1	94.4	94	0.78	51	3.1	8.8	4.1	70	77	**1LE1643-1EB6■-■■■■**	192	0.173
37	**42.5**	**200 L**	1780	198		94.5	94.7	94.2	0.8	61	3.3	9	4	70	77	**1LE1643-2AB6■-■■■■**	258	0.275
55	**63**	**225 M**	1782	295	IE2	95.4	95.7	95.4	0.85	85	3.1	7.4	3	75	89	**1LE1643-2BB6■-■■■■**	405	0.65
75	**86**	**250 M**	1788	401		95.4	95.4	94.8	0.84	117	3.4	8.8	3.8	75	89	**1LE1643-2CB6■-■■■■**	510	1.1
110	**127**	**280 M**	1788	587	IE2	95.8	95.7	94.9	0.85	170	3.4	9.2	3.7	82	96	**1LE1643-2DB6■-■■■■**	710	1.8
6-pole: 1000 rpm at 50 Hz, 1200 rpm at 60 Hz																		
18.5	**22**	**180 L**	1180	150		93	93.2	92.6	0.75	33.5	2.9	7.9	3.7	69	81	**1LE1643-1EC6■-■■■■**	185	0.247
30	**36**	**200 L**	1182	242	IE2	94.1	94.5	94.2	0.77	52	3.2	7.6	3.2	63	70	**1LE1643-2AC6■-■■■■**	270	0.434
37	**44.5**	**225 M**	1186	298	IE2	94.1	94.3	93.7	0.8	62	3.3	8.2	3.5	71	85	**1LE1643-2BC6■-■■■■**	395	0.84
45	**54**	**250 M**	1188	362	IE2	94.5	94.7	94.2	0.83	72	2.8	8.1	3.2	69	83	**1LE1643-2CC6■-■■■■**	480	1.3
75	**90**	**280 M**	1190	602		95	95.1	94.6	0.82	121	4.2	9.5	3.6	70	84	**1LE1643-2DC6■-■■■■**	630	1.9
160	**192**	**315 L**	1192	1282	IE2	95.8	95.7	95	0.82	255	3.3	9	3.8	69	83	**1LE1643-3AC6■-■■■■**	1160	4.6

Voltages		Version					Order code
50 Hz 230 VΔ/400 VY	60 Hz 460 VY	**Standard**	2	2			–
50 Hz 400 VΔ/690 VY	60 Hz 460 VΔ	**Standard**	3	4			–
50 Hz 500 VY		Without additional charge	2	7			–
50 Hz 500 VΔ		Without additional charge	4	0			–
For other voltages and more information, see from page 2/88			9	0			. . .
Types of construction		Version					Order code
Without flange	IM B3 [1]	**Standard**			A		–
With flange	IM B5 [1]	With additional charge			F		–
For other types of construction and more information, see from page 2/94					■		. . .
Motor protection		Version					Order code
PTC thermistor with 3 temperature sensors		**Standard**				B	–
For other motor protection and more information, see from page 2/99						■	. . .
Terminal box position		Version					
Terminal box at top		**Standard**					4
For other terminal box positions and more information, see from page 2/101							■
Special versions							Order code(s)
For options, see from page 2/109							**1LE1643-. . . .** ■**-■■■■-Z** . . .+. . .+. . .+. . .

[1] Types derived from IM B3 (IM B6/7/8, IM V6 and IM V5), from IM B5 (IM V3 and IM V1) and from IM B14 (IM V19 and IM V18) are possible, provided that no requirement exists for stamping of the type on the rating plate. The basic type IM B3, IM B5 or IM B14 is stamped as standard on the rating plate. If mounted in a different position, the position must be specified to ensure that the condensation drainage holes are positioned correctly.

© Siemens AG 2018

Selection and ordering data

P_{rated}, 60 Hz/ P50	P_{rated}, 60 Hz/ P60	Frame size	Operating values at rated power: n_{rated}, 60 Hz	T_{rated}, 60 Hz	η_{rated}, 60 Hz, 4/4	η_{rated}, 60 Hz, 3/4	η_{rated}, 60 Hz, 2/4	cos-φ_{rated}, 60 Hz, 4/4	I_{rated}, 60 Hz, 460 V	T_{LR}/T_{rated}, 60 Hz	I_{LR}/I_{rated}, 60 Hz	T_B/T_{rated}, 60 Hz	L_{pfA}, 60 Hz	L_{WA}, 60 Hz	Aluminum series 1LE1041 Article No.	$m_{IM\ B3}$	J
kW	kW	FS	rpm	Nm	%	%	%		A				dB(A)	dB(A)			
• Cooling: Self-ventilated (IC 411) or with order code F90 forced-air cooled without external fan and fan cover (IC 418) • Efficiency according to IEC 60034-30: IE2 High Efficiency • Insulation: Thermal class 155 (temperature class F), IP55 degree of protection, utilization in accordance with thermal class 130 (temperature class B)																	
2-pole: 3000 rpm at 50 Hz, 3600 rpm at 60 Hz																	
0.75	**0.86**	**80 M**	3445	2.1	75.5	76.2	74.8	0.83	1.5	2.1	6	3	64	75	**1LE1041-0DA2** ■-■■■■	9	0.0008
1.5	**1.75**	**90 S**	3505	4.1	84	83.5	80.7	0.82	2.75	3.1	8.5	4.5	69	81	**1LE1041-0EA0** ■-■■■■	13	0.0017
2.2	**2.55**	**90 L**	3510	6	85.5	85.2	82.6	0.83	3.9	3	8.7	4.6	69	81	**1LE1041-0EA4** ■-■■■■	15	0.0021
4	**4.55**	**112 M**	3555	10	87.5	86.9	84.6	0.83	6.4	2.7	9.9	4.5	73	85	**1LE1041-1BA2** ■-■■■■	27	0.0092
5.5	**6.3**	**132 S**	3555	15	88.5	88.4	87	0.86	9.1	2	7.6	3.3	72	84	**1LE1041-1CA0** ■-■■■■	39	0.02
7.5	**8.6**	**132 S**	3560	20	89.5	89.7	88.7	0.87	12.1	2.3	8.2	3.6	72	84	**1LE1041-1CA1** ■-■■■■	43	0.024
11	**12.6**	**160 M**	3560	30	90.2	89.6	87.4	0.86	17.8	2.4	8.2	3.6	77	89	**1LE1041-1DA2** ■-■■■■	67	0.045
15	**17.3**	**160 M**	3565	40	90.2	90	88.6	0.87	24	2.8	8.4	3.9	77	89	**1LE1041-1DA3** ■-■■■■	75	0.053
18.5	**21.3**	**160 L**	3565	50	91	90.8	89.5	0.87	29.5	3.3	8.9	4.1	77	89	**1LE1041-1DA4** ■-■■■■	84	0.061
4-pole: 1500 rpm at 50 Hz, 1800 rpm at 60 Hz																	
0.75	**0.86**	**80 M**	1750	4.1	78	77.4	74.6	0.72	1.68	2.5	6.8	3.8	55	66	**1LE1041-0DB3** ■-■■■■	11	0.0021
1.5	**1.75**	**90 L**	1745	8.2	84	84	81.9	0.75	3	2.9	7.5	4	58	70	**1LE1041-0EB4** ■-■■■■	16	0.0036
2.2	**2.55**	**100 L**	1760	12	87.5	88.3	87.4	0.78	4.05	2.5	8.1	3.9	62	74	**1LE1041-1AB4** ■-■■■■	21	0.0086
4	**4.55**	**112 M**	1770	20	87.5	87.2	85.1	0.77	6.9	3	8.7	4	62	74	**1LE1041-1BB2** ■-■■■■	29	0.014
5.5	**6.3**	**132 S**	1770	30	89.5	89.6	88.1	0.78	9.9	2.6	8	3.3	68	80	**1LE1041-1CB0** ■-■■■■	42	0.027
7.5	**8.6**	**132 M**	1770	40	89.5	90	89.3	0.82	12.8	2.7	8	3.4	68	80	**1LE1041-1CB2** ■-■■■■	49	0.034
11	**12.6**	**160 M**	1775	59	91	91.2	90.1	0.84	18.1	2.5	7.7	3.2	69	81	**1LE1041-1DB2** ■-■■■■	71	0.065
15	**17.3**	**160 L**	1780	80	91	91.1	90.1	0.84	24.5	2.6	8.5	3.4	69	81	**1LE1041-1DB4** ■-■■■■	83	0.083

Voltages (≤ 600 V)		Version				Order code
50 Hz 230 VΔ/400 VY	60 Hz 460 VY	**Standard**	2	2		–
50 Hz 400 VΔ	60 Hz 460 VΔ	**Standard**	3	4		–
50 Hz 500 VY		Without additional charge	2	7		–
50 Hz 500 VΔ		Without additional charge	4	0		–
For other voltages and more information, see from page 2/85			9	0		. . .
Types of construction		Version				Order code
With flange	IM B5 [1]	With additional charge			F	–
With flange	IM B14 [1]	With additional charge			K	–
For other types of construction and more information, see from page 2/90					■	. . .
Motor protection		Version				Order code
Without		**Standard**				A –
PTC thermistor with 1 or 3 temperature sensors (frame sizes 80, 90 or 100 to 200)		With additional charge				B –
For other motor protection and more information, see from page 2/98						■ . . .
Terminal box position		Version				
Terminal box at top		**Standard**				4
For other terminal box positions and more information, see from page 2/100						■
Special versions						Order code(s)
Forced-air cooled motors w/o ext. fan/fan cover (IC 418)		**1LE1041-. . . .** ■-■■■■ -Z				**F90+. . .+. . .+. . .**
For options, see from page 2/102		**1LE1041-. . . .** ■-■■■■ -Z				**. . .+. . .+. . .+. . .**

[1] Types derived from IM B5 (IM V3 and IM V1) and from IM B14 (IM V19 and IM V18) are possible, provided that no requirements exist for condensation drainage holes (**H03**) and stamping of the type on the rating plate. The basic type IM B5 or IM B14 is stamped as standard on the rating plate. For orders with condensation drainage holes (**H03**), the type must be specified.

© Siemens AG 2018

2

Selection and ordering data

P_{rated}, 60 Hz/ P50	P_{rated}, 60 Hz/ P60	Frame size	Operating values at rated power: n_{rated}, 60 Hz	T_{rated}, 60 Hz	η_{rated}, 60 Hz, 4/4	η_{rated}, 60 Hz, 3/4	η_{rated}, 60 Hz, 2/4	cos-φ_{rated}, 60 Hz, 4/4	I_{rated}, 60 Hz, 460 V	T_{LR}/T_{rated}, 60 Hz	I_{LR}/I_{rated}, 60 Hz	T_B/T_{rated}, 60 Hz	L_{pfA}, 60 Hz	L_{WA}, 60 Hz	Aluminum series 1LE1041 Article No.	$m_{IM\ B3}$	J
kW	kW	FS	rpm	Nm	%	%	%		A				dB(A)	dB(A)			
• Cooling: Self-ventilated (IC 411) or with order code F90 forced-air cooled without external fan and fan cover (IC 418) • Efficiency according to IEC 60034-30: IE2 High Efficiency • Insulation: Thermal class 155 (temperature class F), IP55 degree of protection, utilization in accordance with thermal class 130 (temperature class B)																	
6-pole: 1000 rpm at 50 Hz, 1200 rpm at 60 Hz																	
0.75	**0.86**	**90 S**	1145	6.3	73	72.7	69.7	0.65	1.98	2.2	4.5	3	46	58	**1LE1041-0EC0** ■-■■■■	13	0.003
1.5	**1.75**	**100 L**	1175	12	86.5	86.3	84.2	0.69	3.15	2.2	6.4	3.2	62	74	**1LE1041-1AC4** ■-■■■■	25	0.011
2.2	**2.55**	**112 M**	1170	18	87.5	87.6	86	0.73	4.3	2.1	6.3	3.2	65	77	**1LE1041-1BC2** ■-■■■■	29	0.014
4	**4.55**	**132 M**	1180	30	87.5	87.5	85.7	0.71	7.5	1.9	6.2	3	67	79	**1LE1041-1CC2** ■-■■■■	43	0.029
5.5	**6.3**	**132 M**	1175	45	89.5	89.9	88.9	0.73	10.6	2.1	6.5	2.9	67	79	**1LE1041-1CC3** ■-■■■■	52	0.037
7.5	**8.6**	**160 M**	1180	61	89.5	89.6	88.4	0.73	14.4	2.1	5.4	2.5	70	82	**1LE1041-1DC2** ■-■■■■	77	0.075
11	**12.6**	**160 L**	1180	89	90.2	90.5	89.5	0.74	20.5	2.2	5.5	2.5	70	82	**1LE1041-1DC4** ■-■■■■	93	0.098

Voltages (≤ 600 V)		Version					Order code
50 Hz 230 VΔ/400 VY	60 Hz 460 VY	**Standard**	**2**	**2**			–
50 Hz 400 VΔ	60 Hz 460 VΔ	**Standard**	**3**	**4**			–
50 Hz 500 VY		Without additional charge	**2**	**7**			–
50 Hz 500 VΔ		Without additional charge	**4**	**0**			–
For other voltages and more information, see from page 2/85			**9**	**0**			. . .
Types of construction		Version					Order code
With flange	IM B5 [1]	With additional charge			**F**		–
With flange	IM B14 [1]	With additional charge			**K**		–
For other types of construction and more information, see from page 2/90					■		. . .
Motor protection		Version					Order code
Without		**Standard**				**A**	–
PTC thermistor with 1 or 3 temperature sensors (frame sizes 90 or 100 to 200)		With additional charge				**B**	–
For other motor protection and more information, see from page 2/98						■	. . .
Terminal box position		Version					
Terminal box at top		**Standard**					**4**
For other terminal box positions and more information, see from page 2/100							■
Special versions							Order code(s)
Forced-air cooled motors w/o ext. fan/fan cover (IC 418)		**1LE1041-. . . .** ■-■■■■ **-Z**					**F90+. . .+. . .+. . .**
For options, see from page 2/102		**1LE1041-. . . .** ■-■■■■ **-Z**					**. . .+. . .+. . .+. . .**

[1] Types derived from IM B5 (IM V3 and IM V1) and from IM B14 (IM V19 and IM V18) are possible, provided that no requirements exist for condensation drainage holes (**H03**) and stamping of the type on the rating plate. The basic type IM B5 or IM B14 is stamped as standard on the rating plate. For orders with condensation drainage holes (**H03**), the type must be specified.

© Siemens AG 2018

Selection and ordering data

P_{rated}, 60 Hz/ P50	P_{rated}, 60 Hz/ P60	Frame size	Operating values at rated power: n_{rated}, 60 Hz	T_{rated}, 60 Hz	Different IE class	η_{rated}, 60 Hz, 4/4	η_{rated}, 60 Hz, 3/4	η_{rated}, 60 Hz, 2/4	cos-φ_{rated}, 60 Hz, 4/4	I_{rated}, 60 Hz, 460 V	T_{LR}/T_{rated}, 60 Hz	I_{LR}/I_{rated}, 60 Hz	T_B/T_{rated}, 60 Hz	L_{pfA}, 60 Hz	L_{WA}, 60 Hz	Aluminum series 1LE1041 Article No.	$m_{IM\ B3}$	J
kW	kW	FS	rpm	Nm		%	%	%		A				dB(A)	dB(A)		kg	kgm²
• Cooling: Self-ventilated (IC 411) or with order code F90 forced-air cooled without external fan and fan cover (IC 418) • Efficiency according to IEC 60034-30: IE2 High Efficiency • Insulation: Thermal class 155 (temperature class F), IP55 degree of protection, utilization in accordance with thermal class 130 (temperature class B)																		
2-pole: 3000 rpm at 50 Hz, 3600 rpm at 60 Hz																		
4	**4.55**	**100 L**	3530	10		87.5	87.5	85.9	0.84	6.3	3.3	9.6	4.6	71	83	**1LE1041-1AA6 ■-■■■■**	26	0.0054
5.5	**6.3**	**112 M**	3550	15		88.5	88.6	87.4	0.87	9	2.8	9.9	4.5	73	85	**1LE1041-1BA6 ■-■■■■**	34	0.012
11	**12.6**	**132 M**	3555	30		90.2	90.5	89.8	0.9	17	2.7	9.3	3.6	72	84	**1LE1041-1CA6 ■-■■■■**	57	0.031
15	**17.3**	**132 L**	3555	40		90.2	90.6	90.3	0.91	23	2.5	10	4.7	72	84	**1LE1041-1CA7 ■-■■■■**	65	0.035
22	**25.3**	**160 L**	3565	59		91	91	89.9	0.89	34	3.6	9.6	4.3	77	89	**1LE1041-1DA6 ■-■■■■**	94	0.068
4-pole: 1500 rpm at 50 Hz, 1800 rpm at 60 Hz																		
4	**4.55**	**100 L**	1770	20		87.5	87.7	86.3	0.76	7	2.8	9.2	4.3	62	74	**1LE1041-1AB6 ■-■■■■**	30	0.014
5.5	**6.3**	**112 M**	1765	30		89.5	89.3	87.4	0.8	9.6	2.8	8.3	3.6	62	74	**1LE1041-1BB6 ■-■■■■**	34	0.017
11	**12.6**	**132 M**	1770	59		91	91.5	90.8	0.82	18.5	2.9	8.5	3.6	68	80	**1LE1041-1CB6 ■-■■■■**	64	0.046
18.5	**21.3**	**160 L**	1780	99		92.4	92.4	91.3	0.84	30	2.9	8.8	3.6	69	81	**1LE1041-1DB6 ■-■■■■**	100	0.099
6-pole: 1000 rpm at 50 Hz, 1200 rpm at 60 Hz																		
7.5	**8.6**	**132 M**	1175	61		89.5	89.8	88.7	0.72	14.6	2.2	6.4	3	67	79	**1LE1041-1CC6 ■-■■■■**	64	0.046
15	**17.3**	**160 L**	1180	121	IE1	90.2	90.4	89.3	0.73	28.5	2.3	5.8	2.6	70	82	**1LE1041-1DC6 ■-■■■■**	115	0.12

Voltages (≤ 600 V) [1]		Version					Order code
50 Hz 230 VΔ/400 VY	60 Hz 460 VY	**Standard**	**2**	**2**			–
50 Hz 400 VΔ	60 Hz 460 VΔ	**Standard**	**3**	**4**			–
50 Hz 500 VY		Without additional charge	**2**	**7**			–
50 Hz 500 VΔ		Without additional charge	**4**	**0**			–
For other voltages and more information, see from page 2/85			**9**	**0**			. . .
Types of construction [2]		Version					Order code
With flange	IM B5 [3]	With additional charge			**F**		–
With flange	IM B14 [3]	With additional charge			**K**		–
For other types of construction and more information, see from page 2/90					■		. . .
Motor protection		Version					Order code
Without		**Standard**				**A**	–
PTC thermistor with 3 temperature sensors		With additional charge				**B**	–
For other motor protection and more information, see from page 2/98						■	. . .
Terminal box position		Version					
Terminal box at top		**Standard**					**4**
For other terminal box positions and more information, see from page 2/100							■
Special versions							Order code(s)
Forced-air cooled motors w/o ext. fan/fan cover (IC 418)		**1LE1041-. . . . ■-■■■■**					**-Z F90+. . .+. . .+. . .**
For options, see from page 2/102		**1LE1041-. . . . ■-■■■■**					**-Z . . .+. . .+. . .+. . .**

[1] Operating voltages only ≤ 600 V admissible in accordance with MG1 Table 12-11.

[2] Types of construction with feet are not possible for 2-pole, 4-pole and 6-pole motors ≤ 200 hp in accordance with MG1 Table 12-11.

[3] Types derived from IM B5 (IM V3 and IM V1) and from IM B14 (IM V19 and IM V18) are possible, provided that no requirements exist for condensation drainage holes (**H03**) and stamping of the type on the rating plate. The basic type IM B5 or IM B14 is stamped as standard on the rating plate. For orders with condensation drainage holes (**H03**), the type must be specified.

© Siemens AG 2018

2

Selection and ordering data

P_{rated}, 60 Hz/ P50	P_{rated}, 60 Hz/ P60	Frame size	Operating values at rated power: n_{rated}, 60 Hz	T_{rated}, 60 Hz	Different IE class	η_{rated}, 60 Hz, 4/4	η_{rated}, 60 Hz, 3/4	η_{rated}, 60 Hz, 2/4	cos-φ_{rated}, 60 Hz, 4/4	I_{rated}, 60 Hz, 460 V	T_{LR}/T_{rated}, 60 Hz	I_{LR}/I_{rated}, 60 Hz	T_B/T_{rated}, 60 Hz	L_{pfA}, 60 Hz	L_{WA}, 60 Hz	Cast-iron series 1LE1541 – *Basic Line* Article No.	$m_{IM\ B3}$	J
kW	kW	FS	rpm	Nm			%	%		A				dB(A)	dB(A)		kg	kgm^2
• Cooling: Self-ventilated (IC 411) or with order code F90 forced-air cooled without external fan and fan cover (IC 418) • Efficiency according to IEC 60034-30: IE2 High Efficiency • Insulation: Thermal class 155 (temperature class F), IP55 degree of protection, utilization in accordance with thermal class 130 (temperature class B)																		
2-pole: 3000 rpm at 50 Hz, 3600 rpm at 60 Hz																		
22	24.5	180 M	3550	59		91	90.8	89.5	0.86	35.5	3	8.4	4.1	81	84	1LE1541-1EA2■-■■■■	145	0.069
30	33.5	200 L	3565	80		91.7	91.2	89.6	0.86	47.5	2.9	7.7	3.8	82	89	1LE1541-2AA4■-■■■■	200	0.13
37	41.5	200 L	3565	99		92.4	92.2	91	0.87	58	3.3	8.1	3.8	82	89	1LE1541-2AA5■-■■■■	225	0.15
45	51	225 M	3570	120		93	92.7	91.3	0.88	69	3.1	8.7	3.8	77	90	1LE1541-2BA2■-■■■■	295	0.23
55	62	250 M	3575	147		93	92.5	91	0.89	83	2.4	7.4	3.5	80	94	1LE1541-2CA2■-■■■■	360	0.4
75	84	280 S	3580	200		93.6	92.9	91.1	0.87	116	2.8	7.7	3.5	81	95	1LE1541-2DA0■-■■■■	490	0.71
90	101	280 M	3578	240		94.5	94.2	93.1	0.88	136	2.7	7.9	3.4	81	95	1LE1541-2DA2■-■■■■	530	0.83
110	123	315 S	3585	293		94.5	94	92.5	0.9	162	2.6	7.9	3.3	82	96	1LE1541-3AA0■-■■■■	720	1.3
132	148	315 M	3585	352		95	94.7	93.6	0.91	192	2.7	8.1	3.4	82	96	1LE1541-3AA2■-■■■■	880	1.6
160	180	315 L	3585	426		95	94.6	93.3	0.92	230	2.7	8	3.2	84	99	1LE1541-3AA4■-■■■■	930	1.8
200	224	315 L	3585	533		95.4	95.2	94.2	0.92	285	3.1	8.3	3.2	84	99	1LE1541-3AA5■-■■■■	1130	2.2
4-pole: 1500 rpm at 50 Hz, 1800 rpm at 60 Hz																		
18.5	21.3	180 M	1770	100		92.4	92.6	91.9	0.83	30.5	2.8	7.7	3.9	64	77	1LE1541-1EB2■-■■■■	160	0.12
22	25.3	180 L	1770	119		92.4	92.5	91.8	0.83	36	3	8.4	3.9	72	79	1LE1541-1EB4■-■■■■	170	0.13
30	34.5	200 L	1778	161		93	93.1	92.2	0.84	48	3.2	8.2	3.7	72	79	1LE1541-2AB5■-■■■■	230	0.2
37	42.5	225 S	1778	199		93	93.2	92.5	0.87	57	2.7	7.2	3.3	69	82	1LE1541-2BB0■-■■■■	280	0.42
45	52	225 M	1778	242		93.6	93.8	93.1	0.86	70	3	7.6	3.5	69	83	1LE1541-2BB2■-■■■■	305	0.46
55	63	250 M	1785	294		94.1	94.1	93.3	0.84	87	3.1	7.3	3.3	69	83	1LE1541-2CB2■-■■■■	385	0.75
75	86	280 S	1788	401		94.5	94.3	93.2	0.87	114	2.7	7.6	3.2	79	92	1LE1541-2DB0■-■■■■	550	1.3
90	104	280 M	1788	481		94.5	94.3	93.3	0.87	137	2.9	8.1	3.4	78	92	1LE1541-2DB2■-■■■■	570	1.4
110	127	315 S	1790	587		95	94.8	93.8	0.86	169	3.1	8	3.3	79	93	1LE1541-3AB0■-■■■■	740	2
132	152	315 M	1790	704		95	94.8	94	0.86	205	3.1	7.8	3.2	79	93	1LE1541-3AB2■-■■■■	870	2.3
160	184	315 L	1790	854		95	94.7	93.5	0.87	245	3.1	8.3	3.2	80	95	1LE1541-3AB4■-■■■■	940	2.8
200	230	315 L	1792	1066		95.4	94.7	93.6	0.86	305	3.8	9	3.2	84	98	1LE1541-3AB5■-■■■■	1140	3.5

Voltages		Version						Order code
50 Hz 230 VΔ/400 VY	60 Hz 460 VY	**Standard**	2	2				–
50 Hz 400 VΔ/690 VY	60 Hz 460 VΔ	**Standard**	3	4				–
50 Hz 500 VY		Without additional charge	2	7				–
50 Hz 500 VΔ		Without additional charge	4	0				–
For other voltages and more information, see from page 2/88			9	0				. . .
Types of construction		Version						Order code
With flange	IM B5 [1]	With additional charge			F			–
For other types of construction and more information, see from page 2/94					■			. . .
Motor protection		Version						Order code
Without		**Standard**				A		–
PTC thermistor with 3 temperature sensors		With additional charge				B		–
For other motor protection and more information, see from page 2/99						■		. . .
Terminal box position		Version						
Terminal box at top		**Standard**					4	
For other terminal box positions and more information, see from page 2/101							■	

Special versions		Order code(s)
Forced-air cooled motors w/o ext. fan/fan cover (IC 418)	1LE1541-. . . . ■-■■■■ -Z	F90 +. . .+. . .+. . .
For options, see from page 2/109	1LE1541-. . . . ■-■■■■ -Z	. . .+. . .+. . .+. . .

[1] Types derived from IM B5 (IM V3 and IM V1) and from IM B14 (IM V19 and IM V18) are possible, provided that no requirement exists for stamping of the type on the rating plate. The basic type IM B5 or IM B14 is stamped as standard on the rating plate. If mounted in a different position, the position must be specified to ensure that the condensation drainage holes are positioned correctly.

© Siemens AG 2018

Selection and ordering data (continued)

P_{rated}, 60 Hz/ P50	P_{rated}, 60 Hz/ P60	Frame size	Operating values at rated power: n_{rated}, 60 Hz	T_{rated}, 60 Hz	Different IE class	η_{rated}, 60 Hz, 4/4	η_{rated}, 60 Hz, 3/4	η_{rated}, 60 Hz, 2/4	cos-φ_{rated}, 60 Hz, 4/4	I_{rated}, 60 Hz, 460 V	T_{LR}/T_{rated}, 60 Hz	I_{LR}/I_{rated}, 60 Hz	T_B/T_{rated}, 60 Hz	L_{pfA}, 60 Hz	L_{WA}, 60 Hz	Cast-iron series 1LE1541 – *Basic Line* Article No.	$m_{IM\ B3}$	J
kW	kW	FS	rpm	Nm			%	%		A				dB(A)	dB(A)		kg	kgm^2
• Cooling: Self-ventilated (IC 411) or with order code F90 forced-air cooled without external fan and fan cover (IC 418) • Efficiency according to IEC 60034-30: IE2 High Efficiency • Insulation: Thermal class 155 (temperature class F), IP55 degree of protection, utilization in accordance with thermal class 130 (temperature class B)																		
6-pole: 1000 rpm at 50 Hz, 1200 rpm at 60 Hz																		
15	18	180 L	1178	122		90.2	90.2	89	0.77	27	2.8	6.9	3.4	60	73	1LE1541-1EC4■-■■■■	155	0.17
18.5	22	200 L	1182	149	IE1	91.7	92	91.5	0.81	31.5	2.6	6.7	3	66	79	1LE1541-2AC4■-■■■■	200	0.25
22	26.5	200 L	1182	178	IE1	91.7	92.1	91.6	0.81	37	3	7.4	3	66	79	1LE1541-2AC5■-■■■■	220	0.3
30	36	225 M	1182	242	IE1	93	93.3	92.6	0.83	49	2.9	7	3.1	66	79	1LE1541-2BC2■-■■■■	300	0.58
37	44.5	250 M	1185	298	IE1	93	93.3	92.6	0.83	60	3.3	7.3	2.8	66	79	1LE1541-2CC2■-■■■■	370	0.86
45	54	280 S	1188	362	IE1	93.6	93.8	93.1	0.84	72	3.1	7.4	3	67	81	1LE1541-2DC0■-■■■■	460	1.1
55	66	280 M	1188	442	IE1	93.6	93.9	93.4	0.85	87	3.1	7.2	2.9	67	81	1LE1541-2DC2■-■■■■	510	1.4
75	90	315 S	1190	602	IE1	94.1	94.1	93.2	0.83	121	2.7	7.5	3	67	82	1LE1541-3AC0■-■■■■	660	2.1
90	108	315 M	1190	722	IE1	94.1	94.4	93.5	0.84	143	2.9	7.6	3.1	68	83	1LE1541-3AC2■-■■■■	730	2.5
110	132	315 L	1190	883	IE1	95	95	94.6	0.85	171	3.3	8.1	3.2	69	84	1LE1541-3AC4■-■■■■	940	3.6
132	158	315 L	1190	1059		95	95	94.4	0.85	205	3.7	9.2	3.6	69	84	1LE1541-3AC5■-■■■■	990	4
160	192	315 L	1192	1282		95	94.9	94.2	0.85	250	3.8	9.3	3.4	72	87	1LE1541-3AC6■-■■■■	1160	4.7

Voltages		Version						Order code
50 Hz 230 VΔ/400 VY	60 Hz 460 VY	**Standard**	2	2				–
50 Hz 400 VΔ/690 VY	60 Hz 460 VΔ	**Standard**	3	4				–
50 Hz 500 VY		Without additional charge	2	7				–
50 Hz 500 VΔ		Without additional charge	4	0				–
For other voltages and more information, see from page 2/88			9	0				. . .
Types of construction [1]		Version						Order code
With flange	IM B5 [2]	With additional charge			F			–
For other types of construction and more information, see from page 2/94					■			. . .
Motor protection		Version						Order code
Without		**Standard**				A		–
PTC thermistor with 3 temperature sensors		With additional charge				B		–
For other motor protection and more information, see from page 2/99						■		. . .
Terminal box position		Version						
Terminal box at top		**Standard**					4	
For other terminal box positions and more information, see from page 2/101							■	
Special versions								Order code(s)
Forced-air cooled motors w/o ext. fan/fan cover (IC 418)		1LE1541-. . . . ■-■■■■					-Z	F90 +. . .+. . .+. . .
For options, see from page 2/109		1LE1541-. . . . ■-■■■■					-Z	. . .+. . .+. . .+. . .

[1] Types of construction with feet are not possible for 2-pole, 4-pole and 6-pole motors ≤ 200 hp in accordance with MG1 Table 12-11.

[2] Types derived from IM B5 (IM V3 and IM V1) and from IM B14 (IM V19 and IM V18) are possible, provided that no requirement exists for stamping of the type on the rating plate. The basic type IM B5 or IM B14 is stamped as standard on the rating plate. If mounted in a different position, the position must be specified to ensure that the condensation drainage holes are positioned correctly.

© Siemens AG 2018

2

Selection and ordering data

P_{rated}, 60 Hz/ P50	P_{rated}, 60 Hz/ P60	Frame size	Operating values at rated power: n_{rated}, 60 Hz	T_{rated}, 60 Hz	Different IE class	η_{rated}, 60 Hz, 4/4	η_{rated}, 60 Hz, 3/4	η_{rated}, 60 Hz, 2/4	cos-φ_{rated}, 60 Hz, 4/4	I_{rated}, 60 Hz, 460 V	T_{LR}/T_{rated}, 60 Hz	I_{LR}/I_{rated}, 60 Hz	T_B/T_{rated}, 60 Hz	L_{pfA}, 60 Hz	L_{WA}, 60 Hz	Cast-iron series 1LE1541 – *Basic Line* Article No.	$m_{IM\ B3}$	J
kW	kW	FS	rpm	Nm			%	%		A				dB(A)	dB(A)		kg	kgm^2
• Cooling: Self-ventilated (IC 411) or with order code F90 forced-air cooled without external fan and fan cover (IC 418) • Efficiency according to IEC 60034-30: IE2 High Efficiency • Insulation: Thermal class 155 (temperature class F), IP55 degree of protection, utilization in accordance with thermal class 130 (temperature class B)																		
2-pole: 3000 rpm at 50 Hz, 3600 rpm at 60 Hz																		
30	**33.5**	**180 L**	3550	81		91.7	91.8	90.6	0.89	46	2.5	8.5	3.7	81	83	**1LE1541-1EA6■-■■■■**	180	0.094
45	**51**	**200 L**	3560	121		93	93.1	92.4	0.86	71	3	8.4	3.7	82	89	**1LE1541-2AA6■-■■■■**	245	0.176
55	**62**	**225 M**	3565	147		93	92.8	91.8	0.88	84	2.8	7.9	3.6	77	91	**1LE1541-2BA6■-■■■■**	320	0.26
75	**84**	**250 M**	3578	200		93.6	93.1	91.6	0.85	118	2.4	7.7	3.5	80	94	**1LE1541-2CA6■-■■■■**	390	0.46
110	**123**	**280 M**	3582	293		94.5	94.4	93.5	0.9	162	3.5	9.6	3.9	82	96	**1LE1541-2DA6■-■■■■**	650	1.2
4-pole: 1500 rpm at 50 Hz, 1800 rpm at 60 Hz																		
30	**34.5**	**180 L**	1770	162		93	93.2	92.7	0.8	51	2.6	8.7	3.9	71	78	**1LE1541-1EB6■-■■■■**	185	0.159
37	**42.5**	**200 L**	1775	199		93	93.4	93.1	0.84	59	2.6	8.4	3.3	71	78	**1LE1541-2AB6■-■■■■**	240	0.246
55	**63**	**225 M**	1780	295		94.1	94.4	94	0.84	87	2.8	7.1	3	72	85	**1LE1541-2BB6■-■■■■**	320	0.47
75	**86**	**250 M**	1785	401		94.5	94.6	94	0.85	117	2.6	7.1	3.1	76	89	**1LE1541-2CB6■-■■■■**	440	0.85
110	**127**	**280 M**	1786	588		95	95.1	94.5	0.86	169	2.9	7.9	3.3	80	94	**1LE1541-2DB6■-■■■■**	680	1.7
6-pole: 1000 rpm at 50 Hz, 1200 rpm at 60 Hz																		
18.5	**22**	**180 L**	1180	150		91.7	91.8	90.9	0.75	34	2.6	7	3.4	70	83	**1LE1541-1EC6■-■■■■**	165	0.206
30	**34.5**	**200 L**	1180	243		93	93.4	93	0.77	53	2.9	7.4	3.1	71	78	**1LE1541-2AC6■-■■■■**	240	0.381
37	**44.5**	**225 M**	1182	299	IE1	93	93.3	92.8	0.82	61	2.8	7.3	3.2	66	79	**1LE1541-2BC6■-■■■■**	325	0.67
45	**54**	**250 M**	1186	362	IE1	93.6	93.9	93.4	0.84	72	2.7	7.8	3	70	84	**1LE1541-2CC6■-■■■■**	410	1
75	**90**	**280 M**	1188	603		94.1	94.3	93.9	0.84	119	3.7	8	3.2	69	83	**1LE1541-2DC6■-■■■■**	570	1.8

Voltages		Version			Order code
50 Hz 230 VΔ/400 VY	60 Hz 460 VY	**Standard**	**2**	**2**	–
50 Hz 400 VΔ/690 VY	60 Hz 460 VΔ	**Standard**	**3**	**4**	–
50 Hz 500 VY		Without additional charge	**2**	**7**	–
50 Hz 500 VΔ		Without additional charge	**4**	**0**	–
For other voltages and more information, see from page 2/88			**9**	**0**	. . .

Types of construction [1]		Version		Order code
With flange	IM B5 [2]	With additional charge	**F**	–
For other types of construction and more information, see from page 2/94			■	. . .

Motor protection	Version		Order code
Without	**Standard**	**A**	–
PTC thermistor with 3 temperature sensors	With additional charge	**B**	–
For other motor protection and more information, see from page 2/99		■	. . .

Terminal box position	Version		
Terminal box at top	**Standard**	**4**	
For other terminal box positions and more information, see from page 2/101		■	

Special versions		Order code(s)
Forced-air cooled motors w/o ext. fan/fan cover (IC 418)	**1LE1541-....■-■■■■-Z**	**F90 +. . .+. . .+. . .**
For options, see from page 2/109	**1LE1541-....■-■■■■-Z**	**. . .+. . .+. . .+. . .**

[1] Types of construction with feet are not possible for 2-pole, 4-pole and 6-pole motors ≤ 200 hp in accordance with MG1 Table 12-11.

[2] Types derived from IM B5 (IM V3 and IM V1) and from IM B14 (IM V19 and IM V18) are possible, provided that no requirement exists for stamping of the type on the rating plate. The basic type IM B5 or IM B14 is stamped as standard on the rating plate. If mounted in a different position, the position must be specified to ensure that the condensation drainage holes are positioned correctly.

© Siemens AG 2018

Selection and ordering data

P_{rated}, 60 Hz/ P50	P_{rated}, 60 Hz/ P60	Frame size	Operating values at rated power: n_{rated}, 60 Hz	T_{rated}, 60 Hz	EISA CC No. CC032A	η_{rated}, 60 Hz, 4/4	η_{rated}, 60 Hz, 3/4	η_{rated}, 60 Hz, 2/4	cos-φ_{rated}, 60 Hz, 4/4	I_{rated}, 60 Hz, 460 V	T_{LR}/T_{rated}, 60 Hz	I_{LR}/I_{rated}, 60 Hz	T_B/T_{rated}, 60 Hz	L_{pfA}, 60 Hz	L_{WA}, 60 Hz	Aluminum series 1LE1023 Article No.	$m_{IM\ B3}$	J
kW	hp	FS	rpm	Nm		%	%	%		A				dB(A)	dB(A)		kg	kgm²
• Cooling: Self-ventilated (IC 411) or with order code F90 forced-air cooled without external fan and fan cover (IC 418)																		
• Efficiency: NEMA Premium Efficient, UL, CSA, and service factor (SF) 1.15 – for operation in the USA, Canada, and Mexico																		
• Insulation: Thermal class 155 (temperature class F), IP55 degree of protection, utilization in accordance with thermal class 130 (temperature class B)																		
2-pole: 3000 rpm at 50 Hz, 3600 rpm at 60 Hz																		
0.75	1	80 M	3480	2.1	✓	77	77.2	75.7	0.84	1.45	3	7.1	3.6	64	75	1LE1023-0DA2■-■■■■	11	0.0011
1.1	1.5	80 M	3500	3	✓	84	84	82	0.83	1.98	3.3	8.4	4	64	75	1LE1023-0DA3■-■■■■	12	0.0013
1.5	2	90 S	3525	4.1	✓	85.5	84.8	82.3	0.84	2.6	3.1	9.8	4.9	69	81	1LE1023-0EA0■-■■■■	15	0.0021
2.2	3	90 L	3530	6	✓	86.5	86.4	84.5	0.87	3.65	3	9.6	4.9	69	81	1LE1023-0EA4■-■■■■	19	0.0031
3	4	100 L	3525	8.1	✓	88.5	88.7	87.2	0.87	4.9	3.8	9.7	5.5	71	83	1LE1023-1AA4■-■■■■	26	0.0054
3.7	5	112 M	3560	10	✓	88.5	88	86.2	0.88	6	3.2	10.8	5.1	73	85	1LE1023-1BA2■-■■■■	34	0.012
5.5	7.5	132 S	3555	15	✓	89.5	89.4	88.2	0.9	8.6	2.1	8.6	4.4	72	84	1LE1023-1CA0■-■■■■	43	0.024
7.5	10	132 S	3555	20	✓	90.2	90.5	90	0.91	11.5	2.4	9.5	4.7	72	84	1LE1023-1CA1■-■■■■	57	0.031
11	15	160 M	3560	30	✓	91	90.4	88.4	0.88	17.2	2.8	8.5	4.3	77	89	1LE1023-1DA2■-■■■■	75	0.053
15	20	160 M	3565	40	✓	91	90.5	88.9	0.86	24	3.1	9.7	4.8	77	89	1LE1023-1DA3■-■■■■	84	0.061
18.5	25	160 L	3560	50	✓	91.7	91.5	90.3	0.9	28	3.1	9.4	4.4	77	89	1LE1023-1DA4■-■■■■	94	0.068
22	30	180 M	3560	59	✓	91.7	91.4	90	0.89	34	2.8	8.2	3.9	77	89	1LE1023-1EA2■-■■■■	129	0.08
30	40	200 L	3560	80	✓	92.4	92.2	91.4	0.87	47	2.9	7.6	3.6	77	84	1LE1023-2AA4■-■■■■	173	0.134
37	50	200 L	3560	99	✓	93	92.8	91.6	0.88	57	2.8	7.5	3.6	77	84	1LE1023-2AA5■-■■■■	194	0.158
4-pole: 1500 rpm at 50 Hz, 1800 rpm at 60 Hz																		
0.55	0.75	80 M	1750	3	–	81.1	80.8	78.2	0.74	1.15	2.7	6.9	3.8	55	66	1LE1023-0DB2■-■■■■	11	0.0021
0.75	1	80 M	1760	4.1	✓	83.5	82.6	79.3	0.71	1.59	3.1	8.3	4.7	55	66	1LE1023-0DB3■-■■■■	14	0.0029
1.1	1.5	90 S	1750	6	✓	86.5	86.4	84.2	0.75	2.15	3.4	8.2	4.4	58	70	1LE1023-0EB0■-■■■■	16	0.0036
1.5	2	90 L	1755	8.2	✓	86.5	86.4	84.6	0.77	2.85	3	8.4	4.3	58	70	1LE1023-0EB4■-■■■■	19	0.0049
2.2	3	100 L	1770	11.9	✓	89.5	89.2	87.2	0.81	3.8	3.5	9.6	5.1	62	74	1LE1023-1AB4■-■■■■	30	0.014
3	4	100 L	1760	16.3	✓	89.5	89.5	88.3	0.82	5.1	3.1	9.5	4.6	62	74	1LE1023-1AB5■-■■■■	30	0.014
3.7	5	112 M	1770	19	✓	89.5	89.4	87.7	0.8	6.5	2.9	8.2	4.3	62	74	1LE1023-1BB2■-■■■■	34	0.017
5.5	7.5	132 S	1775	30	✓	91.7	91.6	90.5	0.81	9.3	3.9	9.7	4.5	68	80	1LE1023-1CB0■-■■■■	64	0.046
7.5	10	132 M	1770	40	✓	91.7	91.8	91	0.83	12.4	2.7	9.6	4.2	68	80	1LE1023-1CB2■-■■■■	64	0.046
11	15	160 M	1775	59	✓	92.4	92.3	91.1	0.83	18	3	8.9	3.8	69	81	1LE1023-1DB2■-■■■■	83	0.083
15	20	160 L	1780	80	✓	93	92.8	91.4	0.81	25	2.9	9.5	4.3	69	81	1LE1023-1DB4■-■■■■	100	0.099
18.5	25	180 M	1775	100	✓	93.6	93.7	93.1	0.81	30.5	2.7	7.8	3.6	68	75	1LE1023-1EB2■-■■■■	134	0.13
22	30	180 L	1775	118	✓	93.6	93.8	93.3	0.81	36.5	2.8	7.7	3.7	70	77	1LE1023-1EB4■-■■■■	142	0.14
30	40	200 L	1778	161	✓	94.1	94.3	93.8	0.83	48	3	8.1	3.5	70	77	1LE1023-2AB5■-■■■■	189	0.22

Voltages (≤ 600 V) [1]		Version						Order code
50 Hz 230 VΔ/400 VY	60 Hz 460 VY	**Standard**	2	2				–
50 Hz 400 VΔ	60 Hz 460 VΔ	**Standard**	3	4				–
50 Hz 500 VY		Without additional charge	2	7				–
50 Hz 500 VΔ		Without additional charge	4	0				–
For other voltages and more information, see from page 2/85			9	0				. . .
Types of construction		Version						Order code
Without flange	IM B3 [2]	**Standard**			A			–
With flange	IM B5 [2]	With additional charge			F			–
With flange	IM B14 [2]	With additional charge			K			–
For other types of construction and more information, see from page 2/90					■			. . .
Motor protection		Version						Order code
Without		**Standard**				A		–
PTC thermistor with 1 or 3 temperature sensors (frame sizes 80, 90 or 100 to 200)		With additional charge				B		–
For other motor protection and more information, see from page 2/98						■		. . .
Terminal box position		Version						
Terminal box at top		**Standard**					4	
For other terminal box positions and more information, see from page 2/100							■	
Special versions								Order code(s)
Forced-air cooled motors w/o ext. fan/fan cover (IC 418)			1LE1023-. . . . ■–■■■■					-Z F90 +. . .+. . .+. . .
For options, see from page 2/102			1LE1023-. . . . ■–■■■■					-Z . . .+. . .+. . .+. . .

– Not required
✓ Available

[1] Operating voltages only ≤ 600 V admissible in accordance with MG1 Table 12-12.

[2] Types derived from IM B3 (IM B6/7/8, IM V6, and IM V5), from IM B5 (IM V3 and IM V1) and from IM B14 (IM V19 and IM V18) are possible, provided that no requirements exist for condensation drainage holes (**H03**) or stamping of the type on the rating plate. The basic type IM B3, IM B5, or IM B14 is stamped as standard on the rating plate. For orders with condensation drainage holes (**H03**), the type must be specified.

© Siemens AG 2018

2

Selection and ordering data (continued)

P_{rated}, 60 Hz/ P50	P_{rated}, 60 Hz/ P60	Frame size	Operating values at rated power: n_{rated}, 60 Hz	T_{rated}, 60 Hz	EISA CC No. CC032A	η_{rated}, 60 Hz, 4/4	η_{rated}, 60 Hz, 3/4	η_{rated}, 60 Hz, 2/4	cos-φ_{rated}, 60 Hz, 4/4	I_{rated}, 60 Hz, 460 V	T_{LR}/T_{rated}, 60 Hz	I_{LR}/I_{rated}, 60 Hz	T_B/T_{rated}, 60 Hz	L_{pfA}, 60 Hz	L_{WA}, 60 Hz	Aluminum series 1LE1023 Article No.	$m_{IM\ B3}$	J
kW	hp	FS	rpm	Nm		%	%	%		A				dB(A)	dB(A)		kg	kgm²
• Cooling: Self-ventilated (IC 411) or with order code F90 forced-air cooled without external fan and fan cover (IC 418) • Efficiency: NEMA Premium Efficient, UL, CSA, and service factor (SF) 1.15 – for operation in the USA, Canada, and Mexico • Insulation: Thermal class 155 (temperature class F), IP55 degree of protection, utilization in accordance with thermal class 130 (temperature class B)																		
6-pole: 1000 rpm at 50 Hz, 1200 rpm at 60 Hz																		
0.37	0.5	80 M	1150	3.1	–	75.3	74.3	70	0.61	1.01	2.7	5	3.3	45	56	1LE1023-0DC2■-■■■■	12	0.0025
0.55	0.75	80 M	1145	4.6	–	81.7	80.5	76.4	0.63	1.34	2.8	5.3	3.4	45	56	1LE1023-0DC3■-■■■■	14	0.0031
0.75	1	90 S	1155	6.2	✓	82.5	82.4	79.9	0.65	1.76	2.4	5.3	3.1	46	58	1LE1023-0EC0■-■■■■	16	0.004
1.1	1.5	100 L	1180	8.9	✓	87.5	87.2	84.8	0.69	2.3	2.4	6.7	3.3	62	74	1LE1023-1AC3■-■■■■	30	0.014
3	4	132 S	1185	24	✓	89.5	89.6	88.4	0.75	5.6	2.3	7.5	3.3	67	79	1LE1023-1CC0■-■■■■	52	0.037
3.7	5	132 M	1175	30	✓	89.5	89.6	88.4	0.73	7.1	2.4	7.6	3.4	67	79	1LE1023-1CC2■-■■■■	52	0.037
5.5	7.5	132 M	1180	45	✓	91	91.4	90.5	0.74	10.3	2.3	7.2	3.3	67	79	1LE1023-1CC3■-■■■■	64	0.046
7.5	10	160 M	1185	60	✓	91	91.1	90	0.75	13.8	2.4	5.9	2.6	70	82	1LE1023-1DC2■-■■■■	93	0.098
11	15	160 L	1180	89	✓	91.7	91.9	91	0.75	20	2.3	5.8	2.6	70	82	1LE1023-1DC4■-■■■■	115	0.12
15	20	180 L	1178	122	✓	91.7	92	91.4	0.79	26	2.5	6.8	3	61	68	1LE1023-1EC4■-■■■■	130	0.19
18.5	25	200 L	1180	150	✓	93	93.8	93.8	0.78	32	2.8	6.5	3	64	71	1LE1023-2AC4■-■■■■	166	0.28
22	30	200 L	1180	178	✓	93	93.5	93.4	0.79	37.5	2.6	6.3	2.8	63	70	1LE1023-2AC5■-■■■■	179	0.32
8-pole: 750 rpm at 50 Hz, 900 rpm at 60 Hz																		
2.2	3	132 S	880	24	✓	85.5	85.6	83.6	0.6	5.4	1.5	4	2.1	67	80	1LE1023-1CD0■-■■■■	56	0.038
3	4	132 M	880	33	✓	86.5	86.7	84.9	0.6	7.3	1.7	4.3	2.3	67	80	1LE1023-1CD2■-■■■■	65	0.048
3.7	5	160 M	885	40	✓	86.5	86.2	84	0.62	8.7	2	4.4	2.2	66	79	1LE1023-1DD2■-■■■■	72	0.065
5.5	7.5	160 M	884	59	✓	86.5	86.5	85	0.64	12.5	1.9	4.4	2.2	66	79	1LE1023-1DD3■-■■■■	86	0.083
7.5	10	160 L	882	81	✓	89.5	89.8	88.9	0.64	16.4	2	4.3	2.2	66	79	1LE1023-1DD4■-■■■■	110	0.116
11	15	180 L	880	119	✓	89.5	89.9	89.3	0.72	21.5	2.3	5.8	2.7	65	78	1LE1023-1ED4■-■■■■	161	0.267
15	20	200 L	882	162	✓	90.2	90.2	89.2	0.7	30	3.4	7.7	4.2	60	73	1LE1023-2AD5■-■■■■	212	0.420

Voltages (≤ 600 V) [1]		Version						Order code
50 Hz 230 VΔ/400 VY	60 Hz 460 VY	**Standard**	2	2				–
50 Hz 400 VΔ	60 Hz 460 VΔ	**Standard**	3	4				–
50 Hz 500 VY		Without additional charge	2	7				–
50 Hz 500 VΔ		Without additional charge	4	0				–
For other voltages and more information, see from page 2/85			9	0				. . .
Types of construction		Version						Order code
Without flange	IM B3 [2]	**Standard**			A			–
With flange	IM B5 [2]	With additional charge			F			–
With flange	IM B14 [2]	With additional charge			K			–
For other types of construction and more information, see from page 2/90					■			. . .
Motor protection		Version						Order code
Without		**Standard**				A		–
PTC thermistor with 1 or 3 temperature sensors (frame sizes 80, 90 or 100 to 200)		With additional charge				B		–
For other motor protection and more information, see from page 2/98						■		. . .
Terminal box position		Version						
Terminal box at top		**Standard**					4	
For other terminal box positions and more information, see from page 2/100							■	
Special versions								Order code(s)
Forced-air cooled motors w/o ext. fan/fan cover (IC 418)								1LE1023-. . . . ■–■■■■ -Z F90 +. . .+. . .+. . .
For options, see from page 2/102								1LE1023-. . . . ■–■■■■ -Z . . .+. . .+. . .+. . .

– Not required
✓ Available

[1] Operating voltages only ≤ 600 V admissible in accordance with MG1 Table 12-12.

[2] Types derived from IM B3 (IM B6/7/8, IM V6, and IM V5), from IM B5 (IM V3 and IM V1) and from IM B14 (IM V19 and IM V18) are possible, provided that no requirements exist for condensation drainage holes (**H03**) or stamping of the type on the rating plate. The basic type IM B3, IM B5, or IM B14 is stamped as standard on the rating plate. For orders with condensation drainage holes (**H03**), the type must be specified.

© Siemens AG 2018

Selection and ordering data

P_{rated}, 60 Hz/ P50	P_{rated}, 60 Hz/ P60	Frame size	Operating values at rated power: n_{rated}, 60 Hz	T_{rated}, 60 Hz	EISA CC No. CC032A	η_{rated}, 60 Hz, 4/4	η_{rated}, 60 Hz, 3/4	η_{rated}, 60 Hz, 2/4	cos-φ_{rated}, 60 Hz, 4/4	I_{rated}, 60 Hz, 460 V	T_{LR}/T_{rated}, 60 Hz	I_{LR}/I_{rated}, 60 Hz	T_B/T_{rated}, 60 Hz	L_{pfA}, 60 Hz	L_{WA}, 60 Hz	Cast-iron series 1LE1523 – *Basic Line* Article No.	$m_{IM\ B3}$	J
kW	hp	FS	rpm	Nm		%	%	%		A				dB(A)	dB(A)		kg	kgm²
• Cooling: Self-ventilated (IC 411) or with order code F90 forced-air cooled without external fan and fan cover (IC 418) • Efficiency: NEMA Premium Efficient, UL, CSA, and service factor (SF) 1.15 – for operation in the USA, Canada, and Mexico • Insulation: Thermal class 155 (temperature class F), IP55 degree of protection, utilization in accordance with thermal class 130 (temperature class B)																		
2-pole: 3000 rpm at 50 Hz, 3600 rpm at 60 Hz																		
0.37	0.5	71 M	3470	1	–	73.4	71.7	67	0.73	0.87	4.2	6.8	4.2	57	68	1LE1523-0CA2■-■■■■	13	0.00045
0.55	0.75	71 M	3470	1.5	–	76.8	75.3	71	0.73	1.23	4.5	7.2	4.5	62	73	1LE1523-0CA3■-■■■■	15	0.00056
0.75	1	80 M	3480	2.1	✓	77	77.2	75.7	0.84	1.45	3	7.1	3.6	64	75	1LE1523-0DA2■-■■■■	18	0.0011
1.1	1.5	80 M	3500	3	✓	84	84	82	0.83	1.98	3.3	8.4	4	64	75	1LE1523-0DA3■-■■■■	21	0.0013
1.5	2	90 S	3525	4.1	✓	85.5	84.8	82.3	0.84	2.6	3.1	9.8	4.9	69	81	1LE1523-0EA0■-■■■■	26	0.0021
2.2	3	90 L	3530	6	✓	86.5	86.4	84.5	0.87	3.65	3	9.6	4.9	69	81	1LE1523-0EA4■-■■■■	32	0.0031
3	4	100 L	3525	8.1	✓	88.5	88.7	87.2	0.87	4.9	3.8	9.7	5.5	71	83	1LE1523-1AA4■-■■■■	36	0.0054
3.7	5	112 M	3560	10	✓	88.5	88	86.2	0.88	6	3.2	10.8	5.1	73	85	1LE1523-1BA2■-■■■■	45	0.012
5.5	7.5	132 S	3555	15	✓	89.5	89.4	88.2	0.9	8.6	2.1	8.6	4.4	72	84	1LE1523-1CA0■-■■■■	58	0.024
7.5	10	132 S	3555	20	✓	90.2	90.5	90	0.91	11.5	2.4	9.5	4.7	72	84	1LE1523-1CA1■-■■■■	73	0.031
11	15	160 M	3560	30	✓	91	90.4	88.4	0.88	17.2	2.8	8.5	4.3	77	89	1LE1523-1DA2■-■■■■	100	0.053
15	20	160 M	3565	40	✓	91	90.5	88.9	0.86	24	3.1	9.7	4.8	77	89	1LE1523-1DA3■-■■■■	110	0.061
18.5	25	160 L	3560	50	✓	91.7	91.5	90.3	0.9	28	3.1	9.4	4.4	77	89	1LE1523-1DA4■-■■■■	127	0.068
22	30	180 M	3560	59	✓	91.7	91.4	90	0.89	34	2.8	8.2	3.9	77	89	1LE1523-1EA2■-■■■■	160	0.08
30	40	200 L	3560	80	✓	92.4	92.2	91.4	0.87	47	2.9	7.6	3.6	77	84	1LE1523-2AA4■-■■■■	225	0.134
37	50	200 L	3560	99	✓	93	92.8	91.6	0.88	57	2.8	7.5	3.6	77	84	1LE1523-2AA5■-■■■■	250	0.158
45	60	225 M	3570	120	✓	93.6	93.7	93.1	0.88	69	2.7	7.6	3.5	75	89	1LE1523-2BA2■-■■■■	315	0.26
55	75	250 M	3578	147	✓	93.6	93.4	92.3	0.89	83	2.5	7.3	3.3	76	90	1LE1523-2CA2■-■■■■	385	0.46
75	100	280 S	3578	200	✓	94.1	93.9	92.7	0.89	112	2.7	7.6	3.2	78	92	1LE1523-2DA0■-■■■■	510	0.77
90	125	280 M	3578	240	✓	95	94.8	93.8	0.9	132	2.7	8.1	3.3	78	92	1LE1523-2DA2■-■■■■	590	0.94
110	150	315 S	3585	293	✓	95	94.8	93.8	0.91	160	2.6	8	3.3	79	93	1LE1523-3AA0■-■■■■	750	1.4
132	175	315 M	3585	352	✓	95.4	95.1	94	0.91	191	2.8	8	3.4	79	93	1LE1523-3AA2■-■■■■	880	1.6
150	200	315 L	3588	399	✓	95.4	95.1	93.9	0.91	215	3.3	9.1	3.7	82	96	1LE1523-3AA4■-■■■■	980	1.9
185	250	315 L	3586	493	✓	95.8	95.7	94.8	0.92	265	3.5	8.5	3.5	82	96	1LE1523-3AA5■-■■■■	1150	2.3

Voltages (≤ 600 V) [1]		Version						Order code
50 Hz 230 VΔ/400 VY	60 Hz 460 VY	**Standard**	2	2				–
50 Hz 400 VΔ	60 Hz 460 VΔ	**Standard**	3	4				–
50 Hz 500 VY		Without additional charge	2	7				–
50 Hz 500 VΔ		Without additional charge	4	0				–
For other voltages and more information, see from page 2/88			9	0				. . .
Types of construction		Version						Order code
Without flange	IM B3 [2]	**Standard**			A			–
With flange	IM B5 [2]	With additional charge			F			–
With flange	IM B14 [2]	With additional charge			K			–
For other types of construction and more information, see from page 2/94					■			. . .
Motor protection		Version						Order code
Without		**Standard**				A		–
PTC thermistor with 3 temperature sensors		With additional charge				B		–
For other motor protection and more information, see from page 2/99						■		. . .
Terminal box position		Version						
Terminal box at top		**Standard**					4	
For other terminal box positions and more information, see from page 2/101							■	

Special versions		Order code(s)
Forced-air cooled motors w/o ext. fan/fan cover (IC 418)	1LE1523-. . . . ■-■■■■-Z	F90+. . .+. . .+. . .
For options, see from page 2/109	1LE1523-. . . . ■-■■■■-Z	. . .+. . .+. . .+. . .

– Not required
✓ Available

[1] Operating voltages only ≤ 600 V admissible in accordance with MG1 Table 12-12.
Parallel supply lines are required in the case of connection to ≤ 240 V.
For frame size 315 with connection to ≤ 240 V, due to the high current, a drilled, removable entry plate (order code **R52**) or a larger terminal box (order code **R50**) can be used. Order codes **R52** and **R50** alter the motor dimensions.

[2] Types derived from IM B3 (IM B6/7/8, IM V6, and IM V5), from IM B5 (IM V3 and IM V1) and from IM B14 (IM V19 and IM V18) are possible, provided that no requirement exists for stamping of the type on the rating plate. The basic type IM B3, IM B5 or IM B14 is stamped as standard on the rating plate. If mounted in a different position, the position must be specified to ensure that the condensation drainage holes are positioned correctly.

© Siemens AG 2018

Selection and ordering data (continued)

P_{rated}, 60 Hz/ P50	P_{rated}, 60 Hz/ P60	Frame size	Operating values at rated power: n_{rated}, 60 Hz	T_{rated}, 60 Hz	EISA CC No. CC032A	η_{rated}, 60 Hz, 4/4	η_{rated}, 60 Hz, 3/4	η_{rated}, 60 Hz, 2/4	cos-φ_{rated}, 60 Hz, 4/4	I_{rated}, 60 Hz, 460 V	T_{LR}/T_{rated}, 60 Hz	I_{LR}/I_{rated}, 60 Hz	T_B/T_{rated}, 60 Hz	L_{pfA}, 60 Hz	L_{WA}, 60 Hz	Cast-iron series 1LE1523 – *Basic Line* Article No.	$m_{IM\ B3}$	J
kW	hp	FS	rpm	Nm		%	%	%		A				dB(A)	dB(A)		kg	kgm²
• Cooling: Self-ventilated (IC 411) or with order code F90 forced-air cooled without external fan and fan cover (IC 418) • Efficiency: NEMA Premium Efficient, UL, CSA, and service factor (SF) 1.15 – for operation in the USA, Canada, and Mexico • Insulation: Thermal class 155 (temperature class F), IP55 degree of protection, utilization in accordance with thermal class 130 (temperature class B)																		
4-pole: 1500 rpm at 50 Hz, 1800 rpm at 60 Hz																		
0.25	0.33	71 M	1715	1.4	–	73.4	72.3	68	0.68	0.63	2.9	4.9	3.1	47	58	1LE1523-0CB2■-■■■■	13	0.00095
0.37	0.5	71 M	1720	2.1	–	78.2	76.9	72.5	0.66	0.9	3.6	5.7	3.8	62	73	1LE1523-0CB3■-■■■■	16	0.0014
0.55	0.75	80 M	1750	3	–	81.1	80.8	78.2	0.74	1.15	2.7	6.9	3.8	55	66	1LE1523-0DB2■-■■■■	19	0.0021
0.75	1	80 M	1760	4.1	✓	83.5	82.6	79.3	0.71	1.59	3.1	8.3	4.7	55	66	1LE1523-0DB3■-■■■■	23	0.0029
1.1	1.5	90 S	1750	6	✓	86.5	86.4	84.2	0.75	2.15	3.4	8.2	4.4	58	70	1LE1523-0EB0■-■■■■	25	0.0036
1.5	2	90 L	1755	8.2	✓	86.5	86.4	84.6	0.77	2.85	3	8.4	4.3	58	70	1LE1523-0EB4■-■■■■	31	0.0049
2.2	3	100 L	1770	11.9	✓	89.5	89.2	87.2	0.81	3.8	3.5	9.6	5.1	62	74	1LE1523-1AB4■-■■■■	40	0.014
3	4	100 L	1760	16.3	✓	89.5	89.5	88.3	0.82	5.1	3.1	9.5	4.6	62	74	1LE1523-1AB5■-■■■■	40	0.014
3.7	5	112 M	1770	19	✓	89.5	89.4	87.7	0.8	6.5	2.9	8.2	4.3	62	74	1LE1523-1BB2■-■■■■	46	0.017
5.5	7.5	132 S	1775	30	✓	91.7	91.6	90.5	0.81	9.3	3.9	9.7	4.5	68	80	1LE1523-1CB0■-■■■■	74	0.046
7.5	10	132 M	1770	40	✓	91.7	91.8	91	0.83	12.4	2.7	9.6	4.2	68	80	1LE1523-1CB2■-■■■■	80	0.046
11	15	160 M	1775	59	✓	92.4	92.3	91.1	0.83	18	3	8.9	3.8	69	81	1LE1523-1DB2■-■■■■	109	0.083
15	20	160 L	1780	80	✓	93	92.8	91.4	0.81	25	2.9	9.5	4.3	69	81	1LE1523-1DB4■-■■■■	127	0.099
18.5	25	180 M	1775	100	✓	93.6	93.7	93.1	0.81	30.5	2.7	7.8	3.6	68	75	1LE1523-1EB2■-■■■■	165	0.13
22	30	180 L	1775	118	✓	93.6	93.8	93.3	0.81	36.5	2.8	7.7	3.7	70	77	1LE1523-1EB4■-■■■■	170	0.14
30	40	200 L	1778	161	✓	94.1	94.3	93.8	0.83	48	3	8.1	3.5	70	77	1LE1523-2AB5■-■■■■	240	0.22
37	50	225 S	1782	198	✓	94.5	94.7	94.2	0.85	58	2.8	7.5	3	66	80	1LE1523-2BB0■-■■■■	285	0.42
45	60	225 M	1782	241	✓	95	95.3	94.9	0.84	71	2.9	7.2	3	67	81	1LE1523-2BB2■-■■■■	320	0.47
55	75	250 M	1786	294	✓	95.4	95.6	95.1	0.86	84	2.8	7.6	3.2	67	81	1LE1523-2CB2■-■■■■	420	0.85
75	100	280 S	1788	401	✓	95.4	95.3	94.5	0.85	116	2.8	7.7	3.3	77	91	1LE1523-2DB0■-■■■■	570	1.4
90	125	280 M	1788	481	✓	95.4	95.5	94.9	0.87	136	2.9	8	3.3	79	93	1LE1523-2DB2■-■■■■	670	1.7
110	150	315 S	1790	587	✓	95.8	95.9	95.4	0.86	168	3	7.5	3.1	73	87	1LE1523-3AB0■-■■■■	760	2.2
132	175	315 M	1790	704	✓	96.2	96.3	95.8	0.87	198	3.1	8.2	3.2	76	90	1LE1523-3AB2■-■■■■	960	2.9
150	200	315 L	1791	800	✓	96.2	96.2	95.7	0.87	225	3.5	8.8	3.6	76	90	1LE1523-3AB4■-■■■■	990	3.1
185	250	315 L	1791	986	✓	96.2	96.2	95.5	0.87	275	3.9	9	3.6	78	93	1LE1523-3AB5■-■■■■	1190	3.7

Voltages (≤ 600 V) [1]		Version					Order code
50 Hz 230 VΔ/400 VY	60 Hz 460 VY	**Standard**	2	2			–
50 Hz 400 VΔ	60 Hz 460 VΔ	**Standard**	3	4			–
50 Hz 500 VY		Without additional charge	2	7			–
50 Hz 500 VΔ		Without additional charge	4	0			–
For other voltages and more information, see from page 2/88			9	0			. . .
Types of construction		Version					Order code
Without flange	IM B3 [2]	**Standard**			A		–
With flange	IM B5 [2]	With additional charge			F		–
With flange	IM B14 [2]	With additional charge			K		–
For other types of construction and more information, see from page 2/94					■		. . .
Motor protection		Version					Order code
Without		**Standard**				A	–
PTC thermistor with 3 temperature sensors		With additional charge				B	–
For other motor protection and more information, see from page 2/99						■	. . .
Terminal box position		Version					
Terminal box at top		**Standard**					4
For other terminal box positions and more information, see from page 2/101							■
Special versions							Order code(s)
Forced-air cooled motors w/o ext. fan/fan cover (IC 418)		1LE1523-. . . . ■-■■■■-Z					F90+. . .+. . .+. . .
For options, see from page 2/109		1LE1523-. . . . ■-■■■■-Z					. . .+. . .+. . .+. . .

– Not required
✓ Available

[1] Operating voltages only ≤ 600 V admissible in accordance with MG1 Table 12-12.
Parallel supply lines are required in the case of connection to ≤ 240 V.
For frame size 315 with connection to ≤ 240 V, due to the high current, a drilled, removable entry plate (order code **R52**) or a larger terminal box (order code **R50**) can be used. Order codes **R52** and **R50** alter the motor dimensions.

[2] Types derived from IM B3 (IM B6/7/8, IM V6 and IM V5), from IM B5 (IM V3 and IM V1) and from IM B14 (IM V19 and IM V18) are possible, provided that no requirement exists for stamping of the type on the rating plate. The basic type IM B3, IM B5 or IM B14 is stamped as standard on the rating plate. If mounted in a different position, the position must be specified to ensure that the condensation drainage holes are positioned correctly.

© Siemens AG 2018

Selection and ordering data (continued)

P_{rated}, 60 Hz/ P50	P_{rated}, 60 Hz/ P60	Frame size	Operating values at rated power: n_{rated}, 60 Hz	T_{rated}, 60 Hz	EISA CC No. CC032A	η_{rated}, 60 Hz, 4/4	η_{rated}, 60 Hz, 3/4	η_{rated}, 60 Hz, 2/4	cos-φ_{rated}, 60 Hz, 4/4	I_{rated}, 60 Hz, 460 V	T_{LR}/T_{rated}, 60 Hz	I_{LR}/I_{rated}, 60 Hz	T_B/T_{rated}, 60 Hz	L_{pfA}, 60 Hz	L_{WA}, 60 Hz	Cast-iron series 1LE1523 – *Basic Line* Article No.	$m_{IM\ B3}$	J
kW	hp	FS	rpm	Nm		%	%	%		A				dB(A)	dB(A)		kg	kgm²
• Cooling: Self-ventilated (IC 411) or with order code F90 forced-air cooled without external fan and fan cover (IC 418) • Efficiency: NEMA Premium Efficient, UL, CSA, and service factor (SF) 1.15 – for operation in the USA, Canada, and Mexico • Insulation: Thermal class 155 (temperature class F), IP55 degree of protection, utilization in accordance with thermal class 130 (temperature class B)																		
6-pole: 1000 rpm at 50 Hz, 1200 rpm at 60 Hz																		
0.18	0.25	71 M	1110	1.5	–	67.5	66.3	61	0.63	0.53	2.8	3.5	2.9	42	53	1LE1523-0CC2■-■■■■	13	0.001
0.25	0.33	71 M	1110	2.2	–	71.4	70.6	66.4	0.64	0.69	3.2	3.9	3.2	48	59	1LE1523-0CC3■-■■■■	16	0.015
0.37	0.5	80 M	1150	3.1	–	75.3	74.3	70	0.61	1.01	2.7	5	3.3	45	56	1LE1523-0DC2■-■■■■	19	0.0025
0.55	0.75	80 M	1145	4.6	–	81.7	80.5	76.4	0.63	1.34	2.8	5.3	3.4	45	56	1LE1523-0DC3■-■■■■	23	0.0031
0.75	1	90 S	1155	6.2	✓	82.5	82.4	79.9	0.65	1.76	2.4	5.3	3.1	46	58	1LE1523-0EC0■-■■■■	27	0.0040
3	4	132 S	1185	24	✓	89.5	89.6	88.4	0.75	5.6	2.3	7.5	3.3	67	79	1LE1523-1CC0■-■■■■	70	0.037
3.7	5	132 M	1175	30	✓	89.5	89.6	88.4	0.73	7.1	2.4	7.6	3.4	67	79	1LE1523-1CC2■-■■■■	70	0.037
5.5	7.5	132 M	1180	45	✓	91	91.4	90.5	0.74	10.3	2.3	7.2	3.3	67	79	1LE1523-1CC3■-■■■■	83	0.046
7.5	10	160 M	1185	60	✓	91	91.1	90	0.75	13.8	2.4	5.9	2.6	70	82	1LE1523-1DC2■-■■■■	122	0.098
11	15	160 L	1180	89	✓	91.7	91.9	91	0.75	20	2.3	5.8	2.6	70	82	1LE1523-1DC4■-■■■■	147	0.12
15	20	180 L	1178	122	✓	91.7	92	91.4	0.79	26	2.5	6.8	3	61	68	1LE1523-1EC4■-■■■■	180	0.19
18.5	25	200 L	1180	150	✓	93	93.8	93.8	0.78	32	2.8	6.5	3	64	71	1LE1523-2AC4■-■■■■	215	0.28
22	30	200 L	1180	178	✓	93	93.5	93.4	0.79	37.5	2.6	6.3	2.8	63	70	1LE1523-2AC5■-■■■■	230	0.32
30	40	225 M	1185	242	✓	94.1	94.4	94.1	0.82	49	2.9	7.6	3.3	66	79	1LE1523-2BC2■-■■■■	325	0.67
37	50	250 M	1188	297	✓	94.1	94.4	93.9	0.83	59	3.1	8	3.1	63	76	1LE1523-2CC2■-■■■■	405	1
45	60	280 S	1190	361	✓	94.5	94.6	94.1	0.83	72	3.3	7.7	3.1	66	80	1LE1523-2DC0■-■■■■	510	1.4
55	75	280 M	1190	441	✓	94.5	94.6	94	0.83	88	3.6	7.9	3.3	66	80	1LE1523-2DC2■-■■■■	560	1.6
75	100	315 S	1192	601	✓	95	94.9	94.1	0.82	121	3.1	8.4	3.3	64	79	1LE1523-3AC0■-■■■■	750	2.6
90	125	315 M	1192	721	✓	95	95	94.4	0.84	142	2.7	7.7	3	64	79	1LE1523-3AC2■-■■■■	890	3.1
110	150	315 L	1192	881	✓	95.8	95.9	95.5	0.83	174	3.2	8.2	3.4	64	79	1LE1523-3AC4■-■■■■	990	3.9
132	175	315 L	1192	1057	✓	95.8	96	95.6	0.84	205	3.1	8.4	3.3	65	80	1LE1523-3AC5■-■■■■	1110	4.4
150	200	315 L	1192	1202	✓	95.8	95.7	95	0.81	245	3.6	9.6	4.1	69	83	1LE1523-3AC6■-■■■■	1160	4.6

Voltages (≤ 600 V) [1]		Version					Order code
50 Hz 230 VΔ/400 VY	60 Hz 460 VY	**Standard**	2	2			–
50 Hz 400 VΔ	60 Hz 460 VΔ	**Standard**	3	4			–
50 Hz 500 VY		Without additional charge	2	7			–
50 Hz 500 VΔ		Without additional charge	4	0			–
For other voltages and more information, see from page 2/88			9	0			. . .
Types of construction		Version					Order code
Without flange	IM B3 [2]	**Standard**			A		–
With flange	IM B5 [2]	With additional charge			F		–
With flange	IM B14 [2]	With additional charge			K		–
For other types of construction and more information, see from page 2/94					■		. . .
Motor protection		Version					Order code
Without		**Standard**				A	–
PTC thermistor with 3 temperature sensors		With additional charge				B	–
For other motor protection and more information, see from page 2/99						■	. . .
Terminal box position		Version					
Terminal box at top		**Standard**					4
For other terminal box positions and more information, see from page 2/101							■
Special versions							Order code(s)
Forced-air cooled motors w/o ext. fan/fan cover (IC 418)		1LE1523-. . . . ■-■■■■-Z					F90+. . .+. . .+. . .
For options, see from page 2/109		1LE1523-. . . . ■-■■■■-Z					. . .+. . .+. . .+. . .

– Not required
✓ Available

[1] Operating voltages only ≤ 600 V admissible in accordance with MG1 Table 12-12.
Parallel supply lines are required in the case of connection to ≤ 240 V.
For frame size 315 with connection to ≤ 240 V, due to the high current, a drilled, removable entry plate (order code **R52**) or a larger terminal box (order code **R50**) can be used. Order codes **R52** and **R50** alter the motor dimensions.

[2] Types derived from IM B3 (IM B6/7/8, IM V6 and IM V5), from IM B5 (IM V3 and IM V1) and from IM B14 (IM V19 and IM V18) are possible, provided that no requirement exists for stamping of the type on the rating plate. The basic type IM B3, IM B5 or IM B14 is stamped as standard on the rating plate. If mounted in a different position, the position must be specified to ensure that the condensation drainage holes are positioned correctly.

© Siemens AG 2018

2

Selection and ordering data

P_{rated}, 60 Hz/ P50	P_{rated}, 60 Hz/ P60	Frame size	Operating values at rated power: n_{rated}, 60 Hz	T_{rated}, 60 Hz	EISA CC No. CC032A	η_{rated}, 60 Hz, 4/4	η_{rated}, 60 Hz, 3/4	η_{rated}, 60 Hz, 2/4	cos-φ_{rated}, 60 Hz, 4/4	I_{rated}, 60 Hz, 460 V	T_{LR}/T_{rated}, 60 Hz	I_{LR}/I_{rated}, 60 Hz	T_B/T_{rated}, 60 Hz	L_{pfA}, 60 Hz	L_{WA}, 60 Hz	Cast-iron series 1LE1623 – *Performance Line* Article No.	$m_{IM\ B3}$	J
kW	hp	FS	rpm	Nm		%	%	%		A				dB(A)	dB(A)		kg	kgm²
• Cooling: Self-ventilated (IC 411) or with order code F90 forced-air cooled without external fan and fan cover (IC 418) • Efficiency: NEMA Premium Efficient, UL, CSA, and service factor (SF) 1.15 – for operation in the USA, Canada, and Mexico • Insulation: Thermal class 155 (temperature class F), IP55 degree of protection, utilization in accordance with thermal class 130 (temperature class B)																		
2-pole: 3000 rpm at 50 Hz, 3600 rpm at 60 Hz																		
3	**4**	**100 L**	3525	8.1	✓	88.5	88.7	87.2	0.87	4.9	3.8	9.7	5.5	71	83	**1LE1623-1AA4■-■■■■**	36	0.0054
3.7	**5**	**112 M**	3560	10	✓	88.5	88	86.2	0.88	6	3.2	10.8	5.1	73	85	**1LE1623-1BA2■-■■■■**	45	0.012
5.5	**7.5**	**132 S**	3555	15	✓	89.5	89.4	88.2	0.9	8.6	2.1	8.6	4.4	72	84	**1LE1623-1CA0■-■■■■**	58	0.024
7.5	**10**	**132 S**	3555	20	✓	90.2	90.5	90	0.91	11.5	2.4	9.5	4.7	72	84	**1LE1623-1CA1■-■■■■**	73	0.031
11	**15**	**160 M**	3560	30	✓	91	90.4	88.4	0.88	17.2	2.8	8.5	4.3	77	89	**1LE1623-1DA2■-■■■■**	100	0.053
15	**20**	**160 M**	3565	40	✓	91	90.5	88.9	0.86	24	3.1	9.7	4.8	77	89	**1LE1623-1DA3■-■■■■**	110	0.061
18.5	**25**	**160 L**	3560	50	✓	91.7	91.5	90.3	0.9	28	3.1	9.4	4.4	77	89	**1LE1623-1DA4■-■■■■**	127	0.068
22	**30**	**180 M**	3560	59	✓	91.7	91.4	90	0.89	34	2.8	8.2	3.9	77	89	**1LE1623-1EA2■-■■■■**	160	0.08
30	**40**	**200 L**	3560	80	✓	92.4	92.2	91.4	0.87	47	2.9	7.6	3.6	77	84	**1LE1623-2AA4■-■■■■**	225	0.134
37	**50**	**200 L**	3560	99	✓	93	92.8	91.6	0.88	57	2.8	7.5	3.6	77	84	**1LE1623-2AA5■-■■■■**	250	0.158
45	**60**	**225 M**	3570	120	✓	93.6	93.7	93.1	0.88	69	2.7	7.6	3.5	75	89	**1LE1623-2BA2■-■■■■**	315	0.26
55	**75**	**250 M**	3578	147	✓	93.6	93.4	92.3	0.89	83	2.5	7.3	3.3	76	90	**1LE1623-2CA2■-■■■■**	385	0.46
75	**100**	**280 S**	3578	200	✓	94.1	93.9	92.7	0.89	112	2.7	7.6	3.2	78	92	**1LE1623-2DA0■-■■■■**	510	0.77
90	**125**	**280 M**	3578	240	✓	95	94.8	93.8	0.9	132	2.7	8.1	3.3	78	92	**1LE1623-2DA2■-■■■■**	590	0.94
110	**150**	**315 S**	3585	293	✓	95	94.8	93.8	0.91	160	2.6	8	3.3	79	93	**1LE1623-3AA0■-■■■■**	750	1.4
132	**175**	**315 M**	3585	352	✓	95.4	95.1	94	0.91	191	2.8	8	3.4	79	93	**1LE1623-3AA2■-■■■■**	880	1.6
150	**200**	**315 L**	3588	399	✓	95.4	95.1	93.9	0.91	215	3.3	9.1	3.7	82	96	**1LE1623-3AA4■-■■■■**	980	1.9
185	**250**	**315 L**	3586	493	✓	95.8	95.7	94.8	0.92	265	3.5	8.5	3.5	82	96	**1LE1623-3AA5■-■■■■**	1150	2.3

Voltages (≤ 600 V) [1]		Version					Order code
50 Hz 230 VΔ/400 VY	60 Hz 460 VY	**Standard**	**2**	**2**			–
50 Hz 400 VΔ	60 Hz 460 VΔ	**Standard**	**3**	**4**			–
50 Hz 500 VY		Without additional charge	**2**	**7**			–
50 Hz 500 VΔ		Without additional charge	**4**	**0**			–
For other voltages and more information, see from page 2/88			**9**	**0**			. . .
Types of construction		Version					Order code
Without flange	IM B3 [2]	**Standard**			**A**		–
With flange	IM B5 [2]	With additional charge			**F**		–
With flange	IM B14 [2]	With additional charge			**K**		–
For other types of construction and more information, see from page 2/94					■		. . .
Motor protection		Version					Order code
PTC thermistor with 3 temperature sensors		**Standard**				**B**	–
For other motor protection and more information, see from page 2/99						■	. . .
Terminal box position		Version					
Terminal box at top		**Standard**					**4**
For other terminal box positions and more information, see from page 2/101							■
Special versions							Order code(s)
Forced-air cooled motors w/o ext. fan/fan cover (IC 418)			**1LE1623-. . . .**	■	■■■■	**-Z**	**F90+. . .+. . .+. . .**
For options, see from page 2/109			**1LE1623-. . . .**	■	■■■■	**-Z**	**. . .+. . .+. . .+. . .**

– Not required
✓ Available

[1] Operating voltages only ≤ 600 V admissible in accordance with MG1 Table 12-12.
Parallel supply lines are required in the case of connection to ≤ 240 V.
For frame size 315 with connection to ≤ 240 V, due to the high current, a drilled, removable entry plate (order code **R52**) or a larger terminal box (order code **R50**) can be used. Order codes **R52** and **R50** alter the motor dimensions.

[2] Types derived from IM B3 (IM B6/7/8, IM V6, and IM V5), from IM B5 (IM V3 and IM V1) and from IM B14 (IM V19 and IM V18) are possible, provided that no requirement exists for stamping of the type on the rating plate. The basic type IM B3, IM B5 or IM B14 is stamped as standard on the rating plate. If mounted in a different position, the position must be specified to ensure that the condensation drainage holes are positioned correctly.

© Siemens AG 2018

Selection and ordering data (continued)

P_{rated}, 60 Hz/ P50	P_{rated}, 60 Hz/ P60	Frame size	Operating values at rated power: n_{rated}, 60 Hz	T_{rated}, 60 Hz	EISA CC No. CC032A	η_{rated}, 60 Hz, 4/4	η_{rated}, 60 Hz, 3/4	η_{rated}, 60 Hz, 2/4	cos-φ_{rated}, 60 Hz, 4/4	I_{rated}, 60 Hz, 460 V	T_{LR}/T_{rated}, 60 Hz	I_{LR}/I_{rated}, 60 Hz	T_B/T_{rated}, 60 Hz	L_{pfA}, 60 Hz	L_{WA}, 60 Hz	Cast-iron series 1LE1623 – Performance Line Article No.	$m_{IM\ B3}$	J
kW	hp	FS	rpm	Nm		%	%	%		A				dB(A)	dB(A)		kg	kgm²
• Cooling: Self-ventilated (IC 411) or with order code F90 forced-air cooled without external fan and fan cover (IC 418) • Efficiency: NEMA Premium Efficient, UL, CSA, and service factor (SF) 1.15 – for operation in the USA, Canada, and Mexico • Insulation: Thermal class 155 (temperature class F), IP55 degree of protection, utilization in accordance with thermal class 130 (temperature class B)																		
4-pole: 1500 rpm at 50 Hz, 1800 rpm at 60 Hz																		
2.2	3	100 L	1770	11.9	✓	89.5	89.2	87.2	0.81	3.8	3.5	9.6	5.1	62	74	1LE1623-1AB4■-■■■■	40	0.014
3	4	100 L	1760	16.3	✓	89.5	89.5	88.3	0.82	5.1	3.1	9.5	4.6	62	74	1LE1623-1AB5■-■■■■	40	0.014
3.7	5	112 M	1770	19	✓	89.5	89.4	87.7	0.8	6.5	2.9	8.2	4.3	62	74	1LE1623-1BB2■-■■■■	46	0.017
5.5	7.5	132 S	1775	30	✓	91.7	91.6	90.5	0.81	9.3	3.9	9.7	4.5	68	80	1LE1623-1CB0■-■■■■	74	0.046
7.5	10	132 M	1770	40	✓	91.7	91.8	91	0.83	12.4	2.7	9.6	4.2	68	80	1LE1623-1CB2■-■■■■	80	0.046
11	15	160 M	1775	59	✓	92.4	92.3	91.1	0.83	18	3	8.9	3.8	69	81	1LE1623-1DB2■-■■■■	109	0.083
15	20	160 L	1780	80	✓	93	92.8	91.4	0.81	25	2.9	9.5	4.3	69	81	1LE1623-1DB4■-■■■■	127	0.099
18.5	25	180 M	1775	100	✓	93.6	93.7	93.1	0.81	30.5	2.7	7.8	3.6	68	75	1LE1623-1EB2■-■■■■	165	0.13
22	30	180 L	1775	118	✓	93.6	93.8	93.3	0.81	36.5	2.8	7.7	3.7	70	77	1LE1623-1EB4■-■■■■	170	0.14
30	40	200 L	1778	161	✓	94.1	94.3	93.8	0.83	48	3	8.1	3.5	70	77	1LE1623-2AB5■-■■■■	240	0.22
37	50	225 S	1782	198	✓	94.5	94.7	94.2	0.85	58	2.8	7.5	3	66	80	1LE1623-2BB0■-■■■■	285	0.42
45	60	225 M	1782	241	✓	95	95.3	94.9	0.84	71	2.9	7.2	3	67	81	1LE1623-2BB2■-■■■■	320	0.47
55	75	250 M	1786	294	✓	95.4	95.6	95.1	0.86	84	2.8	7.6	3.2	67	81	1LE1623-2CB2■-■■■■	420	0.85
75	100	280 S	1788	401	✓	95.4	95.3	94.5	0.85	116	2.8	7.7	3.3	77	91	1LE1623-2DB0■-■■■■	570	1.4
90	125	280 M	1788	481	✓	95.4	95.5	94.9	0.87	136	2.9	8	3.3	79	93	1LE1623-2DB2■-■■■■	670	1.7
110	150	315 S	1790	587	✓	95.8	95.9	95.4	0.86	168	3	7.5	3.1	73	87	1LE1623-3AB0■-■■■■	760	2.2
132	175	315 M	1790	704	✓	96.2	96.3	95.8	0.87	198	3.1	8.2	3.2	76	90	1LE1623-3AB2■-■■■■	960	2.9
150	200	315 L	1791	800	✓	96.2	96.2	95.7	0.87	225	3.5	8.8	3.6	76	90	1LE1623-3AB4■-■■■■	990	3.1
185	250	315 L	1791	986	✓	96.2	96.2	95.5	0.87	275	3.9	9	3.6	78	93	1LE1623-3AB5■-■■■■	1190	3.7

Voltages (≤ 600 V) [1]		Version						Order code
50 Hz 230 VΔ/400 VY	60 Hz 460 VY	**Standard**	2	2				–
50 Hz 400 VΔ	60 Hz 460 VΔ	**Standard**	3	4				–
50 Hz 500 VY		Without additional charge	2	7				–
50 Hz 500 VΔ		Without additional charge	4	0				–
For other voltages and more information, see from page 2/88			9	0				. . .
Types of construction		Version						Order code
Without flange	IM B3 [2]	**Standard**			A			–
With flange	IM B5 [2]	With additional charge			F			–
With flange	IM B14 [2]	With additional charge			K			–
For other types of construction and more information, see from page 2/94					■			. . .
Motor protection		Version						Order code
PTC thermistor with 3 temperature sensors		**Standard**				B		–
For other motor protection and more information, see from page 2/99						■		. . .
Terminal box position		Version						
Terminal box at top		**Standard**					4	
For other terminal box positions and more information, see from page 2/101							■	
Special versions								Order code(s)
Forced-air cooled motors w/o ext. fan/fan cover (IC 418)		1LE1623-. . . . ■-■■■■					-Z	F90+. . .+. . .+. . .
For options, see from page 2/109		1LE1623-. . . . ■-■■■■					-Z	. . .+. . .+. . .+. . .

– Not required
✓ Available

[1] Operating voltages only ≤ 600 V admissible in accordance with MG1 Table 12-12.
Parallel supply lines are required in the case of connection to ≤ 240 V.
For frame size 315 with connection to ≤ 240 V, due to the high current, a drilled, removable entry plate (order code **R52**) or a larger terminal box (order code **R50**) can be used. Order codes **R52** and **R50** alter the motor dimensions.

[2] Types derived from IM B3 (IM B6/7/8, IM V6 and IM V5), from IM B5 (IM V3 and IM V1) and from IM B14 (IM V19 and IM V18) are possible, provided that no requirement exists for stamping of the type on the rating plate. The basic type IM B3, IM B5 or IM B14 is stamped as standard on the rating plate. If mounted in a different position, the position must be specified to ensure that the condensation drainage holes are positioned correctly.

© Siemens AG 2018

Selection and ordering data (continued)

P_{rated}, 60 Hz/ P50	P_{rated}, 60 Hz/ P60	Frame size	Operating values at rated power: n_{rated}, 60 Hz	T_{rated}, 60 Hz	EISA CC No. CC032A	η_{rated}, 60 Hz, 4/4	η_{rated}, 60 Hz, 3/4	η_{rated}, 60 Hz, 2/4	cos-φ_{rated}, 60 Hz, 4/4	I_{rated}, 60 Hz, 460 V	T_{LR}/T_{rated}, 60 Hz	I_{LR}/I_{rated}, 60 Hz	T_B/T_{rated}, 60 Hz	L_{pfA}, 60 Hz	L_{WA}, 60 Hz	Cast-iron series 1LE1623 – Performance Line Article No.	$m_{IM\ B3}$	J
kW	hp	FS	rpm	Nm		%	%	%		A				dB(A)	dB(A)		kg	kgm²
• Cooling: Self-ventilated (IC 411) or with order code F90 forced-air cooled without external fan and fan cover (IC 418) • Efficiency: NEMA Premium Efficient, UL, CSA, and service factor (SF) 1.15 – for operation in the USA, Canada, and Mexico • Insulation: Thermal class 155 (temperature class F), IP55 degree of protection, utilization in accordance with thermal class 130 (temperature class B)																		
6-pole: 1000 rpm at 50 Hz, 1200 rpm at 60 Hz																		
3	4	132 S	1185	24	✓	89.5	89.6	88.4	0.75	5.6	2.3	7.5	3.3	67	79	1LE1623-1CC0■-■■■■	70	0.037
3.7	5	132 M	1175	30	✓	89.5	89.6	88.4	0.73	7.1	2.4	7.6	3.4	67	79	1LE1623-1CC2■-■■■■	70	0.037
5.5	7.5	132 M	1180	45	✓	91	91.4	90.5	0.74	10.3	2.3	7.2	3.3	67	79	1LE1623-1CC3■-■■■■	83	0.046
7.5	10	160 M	1185	60	✓	91	91.1	90	0.75	13.8	2.4	5.9	2.6	70	82	1LE1623-1DC2■-■■■■	122	0.098
11	15	160 L	1180	89	✓	91.7	91.9	91	0.75	20	2.3	5.8	2.6	70	82	1LE1623-1DC4■-■■■■	147	0.12
15	20	180 L	1178	122	✓	91.7	92	91.4	0.79	26	2.5	6.8	3	61	68	1LE1623-1EC4■-■■■■	180	0.19
18.5	25	200 L	1180	150	✓	93	93.8	93.8	0.78	32	2.8	6.5	3	64	71	1LE1623-2AC4■-■■■■	215	0.28
22	30	200 L	1180	178	✓	93	93.5	93.4	0.79	37.5	2.6	6.3	2.8	63	70	1LE1623-2AC5■-■■■■	230	0.32
30	40	225 M	1185	242	✓	94.1	94.4	94.1	0.82	49	2.9	7.6	3.3	66	79	1LE1623-2BC2■-■■■■	325	0.67
37	50	250 M	1188	297	✓	94.1	94.4	93.9	0.83	59	3.1	8	3.1	63	76	1LE1623-2CC2■-■■■■	405	1
45	60	280 S	1190	361	✓	94.5	94.6	94.1	0.83	72	3.3	7.7	3.1	66	80	1LE1623-2DC0■-■■■■	510	1.4
55	75	280 M	1190	441	✓	94.5	94.6	94	0.83	88	3.6	7.9	3.3	66	80	1LE1623-2DC2■-■■■■	560	1.6
75	100	315 S	1192	601	✓	95	94.9	94.1	0.82	121	3.1	8.4	3.3	64	79	1LE1623-3AC0■-■■■■	750	2.6
90	125	315 M	1192	721	✓	95	95	94.4	0.84	142	2.7	7.7	3	64	79	1LE1623-3AC2■-■■■■	890	3.1
110	150	315 L	1192	881	✓	95.8	95.9	95.5	0.83	174	3.2	8.2	3.4	64	79	1LE1623-3AC4■-■■■■	990	3.9
132	175	315 L	1192	1057	✓	95.8	96	95.6	0.84	205	3.1	8.4	3.3	65	80	1LE1623-3AC5■-■■■■	1110	4.4
150	200	315 L	1192	1202	✓	95.8	95.7	95	0.81	245	3.6	9.6	4.1	69	83	1LE1623-3AC6■-■■■■	1160	4.6

Voltages (≤ 600 V) [1]		Version					Order code
50 Hz 230 VΔ/400 VY	60 Hz 460 VY	**Standard**	2	2			–
50 Hz 400 VΔ	60 Hz 460 VΔ	**Standard**	3	4			–
50 Hz 500 VY		Without additional charge	2	7			–
50 Hz 500 VΔ		Without additional charge	4	0			–
For other voltages and more information, see from page 2/88			9	0			. . .
Types of construction		Version					Order code
Without flange	IM B3 [2]	**Standard**			A		–
With flange	IM B5 [2]	With additional charge			F		–
With flange	IM B14 [2]	With additional charge			K		–
For other types of construction and more information, see from page 2/94					■		. . .
Motor protection		Version					Order code
PTC thermistor with 3 temperature sensors		**Standard**				B	–
For other motor protection and more information, see from page 2/99						■	. . .
Terminal box position		Version					
Terminal box at top		**Standard**					4
For other terminal box positions and more information, see from page 2/101							■

Special versions		Order code(s)
Forced-air cooled motors w/o ext. fan/fan cover (IC 418)	1LE1623-. . . . ■-■■■■-Z	F90+. . .+. . .+. . .
For options, see from page 2/109	1LE1623-. . . . ■-■■■■-Z	. . .+. . .+. . .+. . .

– Not required
✓ Available

[1] Operating voltages only ≤ 600 V admissible in accordance with MG1 Table 12-12.
Parallel supply lines are required in the case of connection to ≤ 240 V.
For frame size 315 with connection to ≤ 240 V, due to the high current, a drilled, removable entry plate (order code **R52**) or a larger terminal box (order code **R50**) can be used. Order codes **R52** and **R50** alter the motor dimensions.

[2] Types derived from IM B3 (IM B6/7/8, IM V6 and IM V5), from IM B5 (IM V3 and IM V1) and from IM B14 (IM V19 and IM V18) are possible, provided that no requirement exists for stamping of the type on the rating plate. The basic type IM B3, IM B5 or IM B14 is stamped as standard on the rating plate. If mounted in a different position, the position must be specified to ensure that the condensation drainage holes are positioned correctly.

© Siemens AG 2018

Selection and ordering data (continued)

P_{rated}, 60 Hz/ P50	P_{rated}, 60 Hz/ P60	Frame size	Operating values at rated power: n_{rated}, 60 Hz	T_{rated}, 60 Hz	EISA CC No. CC032A	η_{rated}, 60 Hz, 4/4	η_{rated}, 60 Hz, 3/4	η_{rated}, 60 Hz, 2/4	cos-φ_{rated}, 60 Hz, 4/4	I_{rated}, 60 Hz, 460 V	T_{LR}/T_{rated}, 60 Hz	I_{LR}/I_{rated}, 60 Hz	T_B/T_{rated}, 60 Hz	L_{pfA}, 60 Hz	L_{WA}, 60 Hz	Cast-iron series 1LE1623 – Performance Line, Article No.	$m_{IM\ B3}$	J
kW	hp	FS	rpm	Nm		%	%	%		A				dB(A)	dB(A)		kg	kgm²
• Cooling: Self-ventilated (IC 411) or with order code F90 forced-air cooled without external fan and fan cover (IC 418) • Efficiency: NEMA Premium Efficient, UL, CSA, and service factor (SF) 1.15 – for operation in the USA, Canada, and Mexico • Insulation: Thermal class 155 (temperature class F), IP55 degree of protection, utilization in accordance with thermal class 130 (temperature class B)																		
8-pole: 750 rpm at 50 Hz, 900 rpm at 60 Hz																		
2.2	3	132 S	880	24	✓	85.5	85.6	83.6	0.6	5.4	1.5	4	2.1	67	80	1LE1623-1CD0■-■■■■	66	0.038
3	4	132 M	880	33	✓	86.5	86.7	84.9	0.6	7.3	1.7	4.3	2.3	67	80	1LE1623-1CD2■-■■■■	78	0.048
3.7	5	160 M	885	40	✓	86.5	86.2	84	0.62	8.7	2	4.4	2.2	66	79	1LE1623-1DD2■-■■■■	98	0.065
5.5	7.5	160 M	884	59	✓	86.5	86.5	85	0.64	12.5	1.9	4.4	2.2	66	79	1LE1623-1DD3■-■■■■	110	0.083
7.5	10	160 L	882	81	✓	89.5	89.8	88.9	0.64	16.4	2	4.3	2.2	66	79	1LE1623-1DD4■-■■■■	135	0.116
11	15	180 L	880	119	✓	89.5	89.9	89.3	0.72	21.5	2.3	5.8	2.7	65	78	1LE1623-1ED4■-■■■■	190	0.267
15	20	200 L	882	162	✓	90.2	90.2	89.2	0.7	30	3.4	7.7	4.2	60	73	1LE1623-2AD5■-■■■■	255	0.420
18.5	25	225 S	886	199	✓	90.2	90.2	89	0.73	35.5	2.9	6.6	3.4	58	72	1LE1623-2BD0■-■■■■	270	0.50
22	30	225 M	886	237	✓	91.7	91.8	90.8	0.76	39.5	2.9	6.8	3.3	60	74	1LE1623-2BD2■-■■■■	280	0.55
30	40	250 M	888	323	✓	91.7	91.9	91.1	0.77	53	2.9	7	3.3	63	77	1LE1623-2CD2■-■■■■	370	0.86
37	50	280 S	890	397	✓	92.4	92.6	91.9	0.77	65	2.5	6.1	2.6	64	78	1LE1623-2DD0■-■■■■	460	1.1
45	60	280 M	890	483	✓	92.4	92.5	91.9	0.79	77	2.7	6.8	2.7	65	79	1LE1623-2DD2■-■■■■	550	1.6
55	75	315 S	891	589	✓	93.6	93.6	92.9	0.79	93	2.6	6.8	3	68	82	1LE1623-3AD0■-■■■■	650	2.0
75	100	315 M	890	805	✓	93.6	93.7	93	0.8	126	2.5	6.7	3	73	87	1LE1623-3AD2■-■■■■	720	2.5
90	125	315 L	890	966	✓	94.1	94.4	94.1	0.81	148	2.4	6.5	2.8	74	88	1LE1623-3AD4■-■■■■	860	3.1
110	150	315 L	891	1179	✓	94.1	94.2	93.7	0.81	181	2.8	7.2	3.2	74	88	1LE1623-3AD5■-■■■■	980	3.9
132	175	315 L	892	1413	✓	94.5	94.5	93.9	0.8	220	3.2	7.9	3.7	78	92	1LE1623-3AD6■-■■■■	1070	4.5

Voltages (≤ 600 V) [1]		Version				Order code
50 Hz 230 VΔ/400 VY	60 Hz 460 VY	**Standard**	2	2		–
50 Hz 400 VΔ	60 Hz 460 VΔ	**Standard**	3	4		–
50 Hz 500 VY		Without additional charge	2	7		–
50 Hz 500 VΔ		Without additional charge	4	0		–
For other voltages and more information, see from page 2/88			9	0		. . .
Types of construction		Version				Order code
Without flange	IM B3 [2]	**Standard**			A	–
With flange	IM B5 [2]	With additional charge			F	–
With flange	IM B14 [2]	With additional charge			K	–
For other types of construction and more information, see from page 2/94					■	. . .
Motor protection		Version				Order code
PTC thermistor with 3 temperature sensors		**Standard**			B	–
For other motor protection and more information, see from page 2/99					■	. . .
Terminal box position		Version				
Terminal box at top		**Standard**			4	
For other terminal box positions and more information, see from page 2/101					■	
Special versions						Order code(s)
Forced-air cooled motors w/o ext. fan/fan cover (IC 418)		1LE1623-. . . . ■-■■■■			-Z	F90+. . .+. . .+. . .
For options, see from page 2/109		1LE1623-. . . . ■-■■■■			-Z	. . .+. . .+. . .+. . .

– Not required
✓ Available

[1] Operating voltages only ≤ 600 V admissible in accordance with MG1 Table 12-12.
Parallel supply lines are required in the case of connection to ≤ 240 V.
For frame size 315 with connection to ≤ 240 V, due to the high current, a drilled, removable entry plate (order code **R52**) or a larger terminal box (order code **R50**) can be used. Order codes **R52** and **R50** alter the motor dimensions.

[2] Types derived from IM B3 (IM B6/7/8, IM V6 and IM V5), from IM B5 (IM V3 and IM V1) and from IM B14 (IM V19 and IM V18) are possible, provided that no requirement exists for stamping of the type on the rating plate. The basic type IM B3, IM B5 or IM B14 is stamped as standard on the rating plate. If mounted in a different position, the position must be specified to ensure that the condensation drainage holes are positioned correctly.

© Siemens AG 2018

2

Selection and ordering data (continued)

P_{rated}, 60 Hz/ P50	P_{rated}, 60 Hz/ P60	Frame size	Operating values at rated power: n_{rated}, 60 Hz	T_{rated}, 60 Hz	EISA CC No. CC032A	η_{rated}, 60 Hz, 4/4	η_{rated}, 60 Hz, 3/4	η_{rated}, 60 Hz, 2/4	cos-φ_{rated}, 60 Hz, 4/4	I_{rated}, 60 Hz, 460 V	T_{LR}/T_{rated}, 60 Hz	I_{LR}/I_{rated}, 60 Hz	T_B/T_{rated}, 60 Hz	L_{pfA}, 60 Hz	L_{WA}, 60 Hz	Aluminum series 1LE1021 Article No.	$m_{IM\ B3}$	J
kW	hp	FS	rpm	Nm		%	%	%		A				dB(A)	dB(A)	▲ New		
• Cooling: Self-ventilated (IC 411) or with order code F90 forced-air cooled without external fan and fan cover (IC 418)																		
• Efficiency: NEMA Energy Efficient, UL, CSA, and service factor (SF) 1.15 – for operation in the USA and Canada, not admissible for exporting to Mexico																		
• Insulation: Thermal class 155 (temperature class F), IP55 degree of protection, utilization in accordance with thermal class 130 (temperature class B)																		
4-pole: 1500 rpm at 50 Hz, 1800 rpm at 60 Hz																		
0.55	**0.75**	**80 M**	1750	3	–	75.5	74.6	71.1	0.71	1.29	2.7	6.4	3.8	55	66	**1LE1021-0DB2■-■■■■**	10	0.0017
6-pole: 1000 rpm at 50 Hz, 1200 rpm at 60 Hz																		
0.37	**0.5**	**80 M**	1140	3.1	–	64	63	59.1	0.63	1.15	2.3	4.6	2.9	45	56	**1LE1021-0DC2■-■■■■**	9	0.0017
0.55	**0.75**	**80 M**	1135	4.6	–	68	67.4	63.7	0.61	1.66	2.9	5.2	3.6	45	56	**1LE1021-0DC3■-■■■■**	12	0.0025

Voltages (≤ 600 V) [1]		Version					Order code
50 Hz 230 VΔ/400 VY	60 Hz 460 VY	**Standard**	**2**	**2**			–
50 Hz 400 VΔ	60 Hz 460 VΔ	**Standard**	**3**	**4**			–
50 Hz 500 VY		Without additional charge	**2**	**7**			–
50 Hz 500 VΔ		Without additional charge	**4**	**0**			–
For other voltages and more information, see from page 2/85			**9**	**0**			. . .
Types of construction [2]		Version					Order code
With flange	IM B5 [3]	With additional charge			**F**		–
With flange	IM B14 [3]	With additional charge			**K**		–
For other types of construction and more information, see from page 2/90					■		. . .
Motor protection		Version					Order code
Without		**Standard**				**A**	–
PTC thermistor with 1 temperature sensor		With additional charge				**B**	–
For other motor protection and more information, see from page 2/98						■	. . .
Terminal box position		Version					
Terminal box at top		**Standard**					**4**
For other terminal box positions and more information, see from page 2/100							■

Special versions		Order code(s)
Forced-air cooled motors w/o ext. fan/fan cover (IC 418)	**1LE1021-. . . . ■-■■■■-Z**	**F90 +. . .+. . .+. . .**
For options, see from page 2/102	**1LE1021-. . . . ■-■■■■-Z**	**. . .+. . .+. . .+. . .**

– Not required
✓ Available

1) Operating voltages only ≤ 600 V admissible in accordance with MG1 Table 12-11.

2) Types of construction with feet are not possible for 2-pole, 4-pole and 6-pole motors ≤ 200 hp in accordance with MG1 Table 12-11.

3) Types derived from IM B5 (IM V3 and IM V1) and from IM B14 (IM V19 and IM V18) are possible, provided that no requirements exist for condensation drainage holes (**H03**) and stamping of the type on the rating plate. The basic type IM B5 or IM B14 is stamped as standard on the rating plate. For orders with condensation drainage holes (**H03**), the type must be specified.

© Siemens AG 2018

Selection and ordering data

P_{rated}, 60 Hz/ P50	P_{rated}, 60 Hz/ P60	Frame size	Operating values at rated power: n_{rated}, 60 Hz	T_{rated}, 60 Hz	EISA CC No. CC032A	η_{rated}, 60 Hz, 4/4	η_{rated}, 60 Hz, 3/4	η_{rated}, 60 Hz, 2/4	cos-φ_{rated}, 60 Hz, 4/4	I_{rated}, 60 Hz, 460 V	T_{LR}/T_{rated}, 60 Hz	I_{LR}/I_{rated}, 60 Hz	T_B/T_{rated}, 60 Hz	L_{pfA}, 60 Hz	L_{WA}, 60 Hz	Cast-iron series 1LE1521 – *Basic Line* Article No.	$m_{IM\ B3}$	J
kW	hp	FS	rpm	Nm		%	%	%		A				dB(A)	dB(A)		kg	kgm²
• Cooling: Self-ventilated (IC 411) or with order code F90 forced-air cooled without external fan and fan cover (IC 418)																		
• Efficiency: NEMA Energy Efficient, UL, CSA, and service factor (SF) 1.15 – for operation in the USA and Canada, not admissible for exporting to Mexico																		
• Insulation: Thermal class 155 (temperature class F), IP55 degree of protection, utilization in accordance with thermal class 130 (temperature class B)																		
2-pole: 3000 rpm at 50 Hz, 3600 rpm at 60 Hz																		
0.37	**0.5**	**71 M**	3410	1.0	–	72	71.4	67.8	0.77	0.84	2.9	5.1	3	63	74	**1LE1521-0CA2■-■■■■**	12	0.00035
0.55	**0.75**	**71 M**	3420	1.5	–	74	73.4	69.6	0.76	1.23	3.4	5.4	3.4	63	74	**1LE1521-0CA3■-■■■■**	13	0.00045
4-pole: 1500 rpm at 50 Hz, 1800 rpm at 60 Hz																		
0.25	**0.33**	**71 M**	1715	1.4	–	70	68.5	63.6	0.64	0.7	2.8	4.4	3.1	53	64	**1LE1521-0CB2■-■■■■**	12	0.00076
0.37	**0.5**	**71 M**	1705	2.1	–	72	71.2	66.9	0.67	0.96	2.8	4.4	2.8	53	64	**1LE1521-0CB3■-■■■■**	13	0.00095
0.55	**0.75**	**80 M**	1750	3.0	–	75.5	74.6	71.1	0.71	1.29	2.7	6.4	3.8	55	66	**1LE1521-0DB2■-■■■■**	17	0.0017
6-pole: 1000 rpm at 50 Hz, 1200 rpm at 60 Hz																		
0.18	**0.25**	**71 M**	1105	1.6	–	55	53.6	48.8	0.61	0.67	2.9	2.7	2.9	49	60	**1LE1521-0CC2■-■■■■**	12	0.00080
0.25	**0.33**	**71 M**	1100	2.4	–	59.5	58.9	54.7	0.64	0.82	2.7	3	2.7	49	60	**1LE1521-0CC3■-■■■■**	13	0.00100
0.37	**0.5**	**80 M**	1140	3.1	–	64	63	59.1	0.63	1.15	2.3	4.6	2.9	45	56	**1LE1521-0DC2■-■■■■**	17	0.0017
0.55	**0.75**	**80 M**	1135	4.6	–	68	67.4	63.7	0.61	1.66	2.9	5.2	3.6	45	56	**1LE1521-0DC3■-■■■■**	19	0.0025
8-pole: 750 rpm at 50 Hz, 900 rpm at 60 Hz																		
0.09	**0.12**	**71 M**	815	1.1	–	40	38	33	0.59	0.5	2.1	1.8	2.1	59	63	**1LE1521-0CD2■-■■■■**	12	0.00077
0.12	**0.16**	**71 M**	815	1.4	–	40	38	33	0.57	0.7	2.3	2.1	2.4	52	63	**1LE1521-0CD3■-■■■■**	13	0.00100
0.18	**0.25**	**80 M**	855	2.1	–	46	43.5	37	0.53	0.93	2	2.5	2.6	55	66	**1LE1521-0DD2■-■■■■**	17	0.00175
0.25	**0.33**	**80 M**	860	2.8	–	52	49	43	0.51	1.21	2.2	2.9	3	55	66	**1LE1521-0DD3■-■■■■**	19	0.00246
0.37	**0.5**	**90 S**	845	4.2	–	58	55.8	49.5	0.64	1.25	1.6	3	2.1	57	69	**1LE1521-0ED0■-■■■■**	23	0.00225
0.55	**0.75**	**90 L**	840	6.3	–	62	61.2	56.5	0.66	1.69	1.8	3.1	2.1	57	69	**1LE1521-0ED4■-■■■■**	26	0.00305

Voltages (≤ 600 V) [1]		Version						Order code
50 Hz 230 VΔ/400 VY	60 Hz 460 VY	**Standard**	**2**	**2**				–
50 Hz 400 VΔ	60 Hz 460 VΔ	**Standard**	**3**	**4**				–
50 Hz 500 VY		Without additional charge	**2**	**7**				–
50 Hz 500 VΔ		Without additional charge	**4**	**0**				–
For other voltages and more information, see from page 2/88			**9**	**0**				. . .
Types of construction [2]		Version						Order code
Without flange	IM B3 [3]	**Standard**			**A**			–
With flange	IM B5 [3]	With additional charge			**F**			–
For other types of construction and more information, see from page 2/94					■			. . .
Motor protection		Version						Order code
Without		**Standard**				**A**		–
PTC thermistor with 1 temperature sensor		With additional charge				**B**		–
For other motor protection and more information, see from page 2/99						■		. . .
Terminal box position		Version						
Terminal box at top		**Standard**					**4**	
For other terminal box positions and more information, see from page 2/101							■	

Special versions		Order code(s)
Forced-air cooled motors w/o ext. fan/fan cover (IC 418)	**1LE1521-. . . . ■-■■■■**	**-Z F90+. . .+. . .+. . .**
For options, see from page 2/109	**1LE1521-. . . . ■-■■■■**	**-Z . . .+. . .+. . .+. . .**

– Not required
✓ Available

[1] Operating voltages only ≤ 600 V admissible in accordance with MG1 Table 12-11.
Parallel supply lines are required in the case of connection to ≤ 240 V.
For frame size 315 with connection to ≤ 240 V, due to the high current, a drilled, removable entry plate (order code **R52**) or a larger terminal box (order code **R50**) can be used. Order codes **R52** and **R50** alter the motor dimensions.

[2] Types of construction with feet are not possible for 2-pole, 4-pole and 6-pole motors ≤ 200 hp in accordance with MG1 Table 12-11.

[3] Types derived from IM B5 (IM V3 and IM V1) and from IM B14 (IM V19 and IM V18) are possible, provided that no requirement exists for stamping of the type on the rating plate. The basic type IM B5 or IM B14 is stamped as standard on the rating plate. If mounted in a different position, the position must be specified to ensure that the condensation drainage holes are positioned correctly.

© Siemens AG 2018

2

Selection and ordering data

P_{rated1}, 50 Hz	P_{rated2}, 50 Hz	Frame size	Operating values at rated power for N1: n_{rated1}, 50 Hz	T_{rated1}, 50 Hz	η_{rated1}, 50 Hz, 4/4	cos φ_{rated1}, 50 Hz, 4/4	I_{rated1}, 50 Hz, 400 V	T_{LR}/T_{rated1}, 50 Hz	I_{LR}/I_{rated1}, 50 Hz	T_B/T_{rated1}, 50 Hz	Operating values at rated power for N2: n_{rated2}, 50 Hz	T_{rated2}, 50 Hz	η_{rated2}, 50 Hz, 4/4	cos φ_{rated2}, 50 Hz, 4/4	I_{rated2}, 50 Hz, 400 V	T_{LR}/T_{rated2}, 50 Hz	I_{LR}/I_{rated2}, 50 Hz	T_B/T_{rated2}, 50 Hz	Aluminum series 1LE1011 – *one winding* Article No.	$m_{IM\ B3}$	J
kW	kW	FS	rpm	Nm	%		A				rpm	Nm	%		A					kg	kgm²
• **Cooling: Self-ventilated (IC411)** • **Line operation: double pole-changing for constant load torque** • **Insulation: Thermal class 155 (temperature class F), IP55 degree of protection, utilization in accordance with thermal class 130 (temperature class B)**																				
4/2-pole: 1500/3000 rpm at 50 Hz with one winding connected in Dahlander circuit																				
1500 rpm	*3000 rpm*		*1500 rpm*								*3000 rpm*									
1.9	**2.4**	**100 L**	1390	13.1	72	0.87	4.40	1.7	4.1	1.8	2800	8.2	70	0.88	5.6	1.8	4.2	1.8	**1LE1011-1AJ4** ■-■■■■	18	0.0059
2.5	**3.1**	**100 L**	1440	16.6	76.3	0.87	5.4	1.9	5.2	2.8	2840	10.4	77.3	0.9	6.4	2.1	5.2	2.9	**1LE1011-1AJ5** ■-■■■■	22	0.0078
3.7	**4.4**	**112 M**	1420	24.9	79.9	0.86	7.8	1.8	4.9	2.3	2885	14.6	80.8	0.92	8.5	2.1	6.4	2.6	**1LE1011-1BJ2** ■-■■■■	27	0.01
4.7	**5.9**	**132 S**	1440	31.2	82	0.84	9.8	1.6	5.6	2.7	2875	19.6	80	0.89	12.0	1.8	5.6	2.8	**1LE1011-1CJ0** ■-■■■■	38	0.019
6.5	**8.0**	**132 M**	1435	43.3	82	0.86	13.3	1.7	5.4	2.6	2880	26.5	82	0.92	15.3	1.8	6.3	2.8	**1LE1011-1CJ2** ■-■■■■	44	0.024
9.3	**11.5**	**160 M**	1440	61.7	84.5	0.87	18.3	1.7	5.7	2.8	2870	38.3	82	0.92	22.0	1.8	6	2.9	**1LE1011-1DJ2** ■-■■■■	62	0.044
13.0	**16**	**160 L**	1450	85.6	87	0.85	25.5	1.6	6	2.3	2920	52.3	86	0.94	35.5	1.9	7.1	2.8	**1LE1011-1DJ6** ■-■■■■	85	0.068
8/4-pole: 750/1500 rpm at 50 Hz with one winding connected in Dahlander circuit																				
750 rpm	*1500 rpm*		*750 rpm*								*1500 rpm*									
0.55	**1.1**	**100 L**	715	7.3	57	0.53	2.65	2	3	2.7	1425	7.4	77.7	0.87	2.35	1.7	4.6	2.1	**1LE1011-1AL4** ■-■■■■	18	0.0059
0.9	**1.5**	**100 L**	700	12.3	64.2	0.64	3.15	1.5	2.9	2	1415	10.1	77.7	0.89	3.15	1.5	4.5	1.9	**1LE1011-1AL5** ■-■■■■	22	0.0078
1.1	**1.9**	**112 M**	715	14.7	66.5	0.6	4.00	1.6	3.2	2.3	1440	12.6	80.9	0.87	3.90	1.6	5.4	2.3	**1LE1011-1BL2** ■-■■■■	27	0.01
1.6	**3.2**	**132 S**	730	20.9	61.5	0.53	7.1	1.6	3.3	2.6	1450	21.1	82.3	0.87	6.5	1.4	5	2.1	**1LE1011-1CL0** ■-■■■■	38	0.019
2.2	**4.4**	**132 M**	730	28.8	68	0.52	9.0	2	3.8	3	1450	29	84.5	0.88	8.5	1.5	5.5	2.3	**1LE1011-1CL2** ■-■■■■	44	0.024
3.5	**7**	**160 M**	730	45.8	77.5	0.57	11.4	2	4.2	2.8	1450	46.1	84	0.9	13.4	1.6	5.2	2.2	**1LE1011-1DL2** ■-■■■■	62	0.044
5.6	**11**	**160 L**	725	73.8	80.2	0.6	16.8	1.9	4	2.7	1445	72.7	84.4	0.9	21.0	1.5	5.1	2.2	**1LE1011-1DL4** ■-■■■■	73	0.056

Voltages	Version			Order code
50 Hz 230 V	**Standard**	2	2	–
50 Hz 400 V	**Standard**	3	4	–
50 Hz 500 V	Without additional charge	4	0	–
50 Hz 690 V	Without additional charge	4	7	–
For other voltages [1] and more information, see from page 2/87		9	0	. . .

Types of construction		Version		Order code
Without flange	IM B3 [2]	**Standard**	A	–
With flange	IM B5 [2]	With additional charge	F	–
With flange	IM B14 [2]	With additional charge	K	–
For other types of construction and more information, see from page 2/90			■	. . .

Motor protection	Version		Order code
Without	**Standard**	A	–
PTC thermistor with 3 temperature sensors	With additional charge	B	–
For other motor protection and more information, see from page 2/98		■	. . .

Terminal box position	Version		
Terminal box at top	**Standard**	4	
For other terminal box positions and more information, see from page 2/100		■	

Special versions		Order code(s)
For options, see from page 2/102	**1LE1011-. . . .** ■-■■■■ -Z	. . .+. . .+. . .+. . .

Note: Pole-changing motors (4/2-pole) do not comply with the vibration values stipulated in IEC 60034-14 when rigidly installed (see also page 1/56).

[1] Operating values for 60 Hz are available on request.

[2] Types derived from IM B3 (IM B6/7/8, IM V6, and IM V5), from IM B5 (IM V3 and IM V1) and from IM B14 (IM V19 and IM V18) are possible, provided that no requirements exist for condensation drainage holes (**H03**) or stamping of the type on the rating plate. The basic type IM B3, IM B5 or IM B14 is stamped as standard on the rating plate. For orders with condensation drainage holes (**H03**), the type must be specified.

© Siemens AG 2018

Selection and ordering data

P_{rated1}, 50 Hz	P_{rated2}, 50 Hz	Frame size	Operating values at rated power for N1: n_{rated1}, 50 Hz	T_{rated1}, 50 Hz	η_{rated1}, 50 Hz, 4/4	cos φ_{rated1}, 50 Hz, 4/4	I_{rated1}, 50 Hz, 400 V	T_{LR}/T_{rated1}, 50 Hz	I_{LR}/I_{rated1}, 50 Hz	T_B/T_{rated1}, 50 Hz	Operating values at rated power for N2: n_{rated2}, 50 Hz	T_{rated2}, 50 Hz	η_{rated2}, 50 Hz, 4/4	cos φ_{rated2}, 50 Hz, 4/4	I_{rated2}, 50 Hz, 400 V	T_{LR}/T_{rated2}, 50 Hz	I_{LR}/I_{rated2}, 50 Hz	T_B/T_{rated2}, 50 Hz	Aluminum series 1LE1011 – *one winding* 1LE1012 – *two windings* Article No.	$m_{IM\ B3}$	J
kW	kW	FS	rpm	Nm	%		A				rpm	Nm	%		A						
• Cooling: Self-ventilated (IC411) • Line operation: double pole-changing for square-law load torque, e.g. for driving fans • Insulation: Thermal class 155 (temperature class F), IP55 degree of protection, utilization in accordance with thermal class 130 (temperature class B)																					
4/2-pole: 1500/3000 rpm at 50 Hz with one winding connected in Dahlander circuit																					
1500 rpm	*3000 rpm*		*1500 rpm*								*3000 rpm*										
0.65	**2.4**	**100 L**	1415	4.4	75	0.86	1.45	1.6	4.1	1.8	2800	8.2	70	0.88	5.6	1.8	4.2	1.8	**1LE1011-1AP4■-■■■■**	18	0.0059
0.8	**3.1**	**100 L**	1435	5.3	79	0.85	1.72	1.9	5.2	2.8	2840	10.4	77.3	0.9	6.4	2.1	5.2	2.8	**1LE1011-1AP5■-■■■■**	22	0.0078
1.1	**4.4**	**112 M**	1455	7.2	83.4	0.85	2.25	2.2	6.1	2.5	2885	14.6	80.8	0.92	8.5	2.1	6.4	2.5	**1LE1011-1BP2■-■■■■**	27	0.01
1.45	**5.9**	**132 S**	1460	9.5	84	0.84	2.95	1.6	5.8	2.8	2875	19.6	80	0.89	12.0	1.8	5.6	2.8	**1LE1011-1CP0■-■■■■**	38	0.019
2.0	**8.0**	**132 M**	1455	13.1	85	0.85	4.00	1.8	5.6	2.8	2880	26.5	82	0.92	15.3	1.8	6.3	2.8	**1LE1011-1CP2■-■■■■**	44	0.024
2.9	**11.5**	**160 M**	1465	18.9	86.5	0.86	5.6	1.8	5.9	2.9	2870	38.3	82	0.92	22.0	1.8	6	2.9	**1LE1011-1DP2■-■■■■**	62	0.044
4.3	**16**	**160 L**	1455	28.2	87	0.85	8.4	1.6	6	2.3	2920	52.3	86	0.94	28.5	1.9	7.1	2.3	**1LE1011-1DP6■-■■■■**	85	0.068
6/4-pole: 1000/1500 rpm at 50 Hz with two windings																					
1000 rpm	*1500 rpm*		*1000 rpm*								*1500 rpm*										
0.6	**1.7**	**100 L**	970	5.9	55.5	0.62	2.50	1.7	3.4	2.7	1435	11.3	76.2	0.83	3.90	1.8	4.6	2.7	**1LE1012-1AQ4■-■■■■**	18	0.0059
0.75	**2.1**	**100 L**	955	8	64.2	0.77	2.20	1.2	3.4	2	1435	14	78.4	0.84	4.60	2	5.4	2	**1LE1012-1AQ5■-■■■■**	22	0.0078
0.9	**3.0**	**112 M**	975	8.8	64.7	0.66	3.05	1.6	3.9	2.5	1455	19.7	81.4	0.78	6.8	2.1	6.4	2.5	**1LE1012-1BQ2■-■■■■**	27	0.01
1.2	**3.9**	**132 S**	980	11.7	72.3	0.7	3.40	1.4	4.6	2.5	1455	25.6	83.1	0.83	8.2	1.5	5.7	2.5	**1LE1012-1CQ0■-■■■■**	38	0.019
1.7	**5.4**	**132 M**	980	16.6	74.1	0.71	4.65	1.7	5	2.5	1465	35.2	85.9	0.82	11.1	2	6.9	2.5	**1LE1012-1CQ2■-■■■■**	44	0.024
2.5	**7.2**	**160 M**	985	24.2	77.7	0.71	6.5	1.5	4.7	2.6	1470	46.8	86.9	0.85	14.1	1.8	6.3	2.6	**1LE1012-1DQ2■-■■■■**	62	0.044
3.7	**12.0**	**160 L**	985	35.9	82.4	0.69	9.4	2.3	6.2	3.5	1475	77.7	87.9	0.8	24.5	2.1	7.5	3.5	**1LE1012-1DQ4■-■■■■**	73	0.059
6.5	**19**	**180 L**	985	63	81.0	0.7	16.5	1.8	5.5	2.7	1475	123	0.9	0.8	38.0	2.5	8.1	3.7	**1LE1012-1EQ4■-■■■■**	132	0.13
9.5	**26**	**200 L**	985	92	84.5	0.7	23.0	2.3	6.5	2.8	1475	168	0.91	0.8	52	2.3	7.5	3.4	**1LE1012-2AQ5■-■■■■**	173	0.20

Voltages		Version						Order code
50 Hz 230 V		**Standard**	2	2				–
50 Hz 400 V		**Standard**	3	4				–
50 Hz 500 V		Without additional charge	4	0				–
50 Hz 690 V		Without additional charge	4	7				–
For other voltages [1] and more information, see from page 2/87			9	0				...
Types of construction		Version						Order code
Without flange	IM B3 [2]	**Standard**			A			–
With flange	IM B5 [2]	With additional charge			F			–
With flange	IM B14 [2]	With additional charge			K			–
For other types of construction and more information, see from page 2/90					■			...
Motor protection		Version						Order code
Without		**Standard**				A		–
PTC thermistor with 3 temperature sensors		With additional charge				B		–
For other motor protection and more information, see from page 2/98						■		...
Terminal box position		Version						
Terminal box at top		**Standard**					4	
For other terminal box positions and more information, see from page 2/100							■	
Special versions								Order code(s)
For options, see from page 2/102								**1LE101■-....■-■■■■-Z** ...+...+...

Note: Pole-changing motors (4/2-pole) do not comply with the vibration values stipulated in IEC 60034-14 when rigidly installed (see also page 1/56).

[1] Operating values for 60 Hz are available on request.

[2] Types derived from IM B3 (IM B6/7/8, IM V6, and IM V5), from IM B5 (IM V3 and IM V1) and from IM B14 (IM V19 and IM V18) are possible, provided that no requirements exist for condensation drainage holes (**H03**) or stamping of the type on the rating plate. The basic type IM B3, IM B5 or IM B14 is stamped as standard on the rating plate. For orders with condensation drainage holes (**H03**), the type must be specified.

© Siemens AG 2018

2

Selection and ordering data (continued)

P_{rated1}, 50 Hz	P_{rated2}, 50 Hz	Frame size	Operating values at rated power for N1: n_{rated1}, 50 Hz	T_{rated1}, 50 Hz	η_{rated1}, 50 Hz, 4/4	cos φ_{rated1}, 50 Hz, 4/4	I_{rated1}, 400 V	T_{LR}/T_{rated1}, 50 Hz	I_{LR}/I_{rated1}, 50 Hz	T_B/T_{rated1}, 50 Hz	Operating values at rated power for N2: n_{rated2}, 50 Hz	T_{rated2}, 50 Hz	η_{rated2}, 50 Hz, 4/4	cos φ_{rated2}, 50 Hz, 4/4	I_{rated2}, 400 V	T_{LR}/T_{rated2}, 50 Hz	I_{LR}/I_{rated2}, 50 Hz	T_B/T_{rated2}, 50 Hz	Aluminum series 1LE1011 – one winding, Article No.	$m_{IM\ B3}$	J
kW	kW	FS	rpm	Nm	%		A				rpm	Nm	%		A						
• Cooling: Self-ventilated (IC411) • Line operation: double pole-changing for square-law load torque, e.g. for driving fans • Insulation: Thermal class 155 (temperature class F), IP55 degree of protection, utilization in accordance with thermal class 130 (temperature class B)																					
8/4-pole: 750/1500 rpm at 50 Hz with one winding connected in Dahlander circuit																					
750 rpm	*1500 rpm*		*750 rpm*								*1500 rpm*										
0.5	**2.0**	**100 L**	720	6.6	52	0.5	2.80	1.3	3.3	3.4	1440	13.3	82	0.79	4.45	3	7.5	3.4	**1LE1011-1AR4■-■■■■**	22	0.0078
0.65	**2.5**	**100 L**	715	8.7	56	0.58	2.90	1	3.2	2.6	1425	16.8	81	0.84	5.3	2.3	6.3	2.6	**1LE1011-1AR5■-■■■■**	22	0.0078
0.9	**3.6**	**112 M**	715	12	56	0.57	4.05	1	2.8	2.1	1430	24	82	0.84	7.5	1.9	5.6	2.1	**1LE1011-1BR2■-■■■■**	27	0.01
1.1	**4.7**	**132 S**	730	14.4	62	0.54	4.75	1	3.2	2.2	1430	31.4	82	0.86	9.6	1.7	5.2	2.2	**1LE1011-1CR0■-■■■■**	38	0.019
1.4	**6.4**	**132 M**	730	18.3	67.5	0.52	5.8	1.1	3.5	2.3	1440	42.4	84.5	0.87	12.6	1.9	5.7	2.3	**1LE1011-1CR2■-■■■■**	44	0.024
2.2	**9.5**	**160 M**	730	28.8	80.6	0.63	6.3	1.5	4	2.5	1465	61.9	86.1	0.84	19.0	2	6.3	2.5	**1LE1011-1DR2■-■■■■**	62	0.044
3.3	**14**	**160 L**	735	42.9	81.4	0.56	10.4	2.5	4.8	3.3	1475	90.6	85.8	0.73	32.5	2.5	7.2	3.3	**1LE1011-1DR4■-■■■■**	73	0.056
4.5	**16**	**180 M**	730	59	79.3	0.59	13.9	1.4	3.8	2.3	1470	104	84.6	0.83	33.0	1.4	7	2.9	**1LE1011-1ER2■-■■■■**	128	0.12
5	**18.5**	**180 L**	730	65	78.3	0.6	15.4	1.5	3.8	2.1	1470	120	86.6	0.83	37.0	2.3	7	2.7	**1LE1011-1ER4■-■■■■**	132	0.13
7.5	**28**	**200 L**	735	97	85.0	0.6	21.0	1.7	4	2.1	1475	181	90.5	0.85	53	2.7	7.4	3.1	**1LE1011-2AR5■-■■■■**	173	0.20

Voltages		Version				Order code
50 Hz 230 V		**Standard**	2	2		–
50 Hz 400 V		**Standard**	3	4		–
50 Hz 500 V		Without additional charge	4	0		–
50 Hz 690 V		Without additional charge	4	7		–
For other voltages [1] and more information, see from page 2/87			9	0		. . .
Types of construction		Version				Order code
Without flange	IM B3 [2]	**Standard**			A	–
With flange	IM B5 [2]	With additional charge			F	–
With flange	IM B14 [2]	With additional charge			K	–
For other types of construction and more information, see from page 2/90					■	. . .
Motor protection		Version				Order code
Without		**Standard**				–
PTC thermistor with 3 temperature sensors		With additional charge			B	–
For other motor protection and more information, see from page 2/98					■	. . .
Terminal box position		Version				
Terminal box at top		**Standard**				4
For other terminal box positions and more information, see from page 2/100						■
Special versions						Order code(s)
For options, see from page 2/102						**1LE101■-. . . . ■-■■■■-Z** . . .+. . .+. . .

Note: Pole-changing motors (4/2-pole) do not comply with the vibration values stipulated in IEC 60034-14 when rigidly installed (see also page 1/56).

[1] Operating values for 60 Hz are available on request.

[2] Types derived from IM B3 (IM B6/7/8, IM V6, and IM V5), from IM B5 (IM V3 and IM V1) and from IM B14 (IM V19 and IM V18) are possible, provided that no requirements exist for condensation drainage holes (**H03**) or stamping of the type on the rating plate. The basic type IM B3, IM B5 or IM B14 is stamped as standard on the rating plate. For orders with condensation drainage holes (**H03**), the type must be specified.

© Siemens AG 2018

Selection and ordering data

Voltages	Article No. supplement: Voltage code 12th and 13th position of the Article No.		Additional identification code withorder code and plain text if required	Frame size: 63	71	80	90	100	112	132	160	180	200	Motor version		
								1LE1004						IEC	IE4	①
						1LE1003									IE3	②
				1LE1001											IE2	③
				1LE1002											IE1	④
						1LE1043								APAC Line	IE3	⑤
						1LE1041									IE2	⑥
						1LE1023								Eagle Line	NPE (NEMA)	⑦
1LE10 . . - . . . . ■ - ■ . . .			Order code				1LE1021								NEE (NEMA)	⑧
Voltage at 50 Hz or 60 Hz – Operating values at rated power for 60 Hz are stored in the Drive Technology Configurator (DTC)																
50 Hz 230 VΔ/400 VY, 60 Hz 460 VY	**2**	**2**	–	□	□	□	□	□	□	□	□	□	□			
50 Hz 400 VΔ/690 VY, 60 Hz 460 VΔ [1]	**3**	**4**	–	□	□	□	□	□	□	□	□	□	□	Not for:	APAC Line Eagle Line	⑤, ⑥ ⑦, ⑧
50 Hz 400 VΔ, 60 Hz 460 VΔ [1]				–	–	□	□	□	□	□	□	□	□	Only for:	APAC Line Eagle Line	⑤, ⑥ ⑦, ⑧
50 Hz 400 VY, 60 Hz 460 VY [2] [3]	**0**	**2**	–	–	–	□	□	□	□	□	□	□	□			
50 Hz 400 VΔ, 60 Hz 460 VΔ [4]	**0**	**4**	–	–	–	□	□	□	□	□	□	□	□			
50 Hz 500 VY 60 Hz 575 VY [7]	**2**	**7**	–	○	○	○	○	○	○	○	○	○	○	Not for:	IEC IE4	①
50 Hz 500 VΔ 60 Hz 575 VΔ	**4**	**0**	–	○	○	–	–	○	○	○	○	○	○	Not for:	IEC IE4	①
50 Hz 220 VΔ/380 VY 60 Hz 440 VY	**2**	**1**	–	✓	✓	✓	✓	✓	✓	✓	✓	✓	✓			
50 Hz 380 VΔ/660 VY [1], 60 Hz 440 VΔ	**3**	**3**	–	✓	✓	✓	✓	✓	✓	✓	✓	✓	✓	Not for:	APAC Line Eagle Line	⑤, ⑥ ⑦, ⑧
50 Hz 380 VΔ [1]				–	–	–	–	✓	✓	✓	✓	✓	✓	Only for:	APAC Line Eagle Line	⑤, ⑥ ⑦, ⑧
50 Hz 240 VΔ/415 VY, 60 Hz 480 VY	**2**	**3**	–	✓	✓	✓	✓	✓	✓	✓	✓	✓	✓			
50 Hz 415 VΔ, 60 Hz 480 VΔ	**3**	**5**	–	○	○	✓	✓	✓	✓	✓	✓	✓	✓			
60 Hz 220 VΔ/380 VY	**1**	**7**	–	–	–	✓	✓	✓	✓	✓	✓	✓	✓	Not for:	IEC IE1	④
60 Hz 230 VΔ/400 VY	**1**	**8**	–	–	–	✓	✓	✓	✓	✓	✓	✓	✓	Not for:	IEC IE1	④
60 Hz 380 VΔ/660 VY [1]	**3**	**0**	–	–	–	✓	✓	✓	✓	✓	✓	✓	✓	Not for:	IEC IE1 Eagle Line	④ ⑦, ⑧
60 Hz 380 VΔ [1]			–	–	–	✓	✓	✓	✓	✓	✓	✓	✓	Only for:	Eagle Line	⑦ ⑧
60 Hz 400 VΔ/690 VY [1]	**3**	**1**	–	–	–	✓	✓	✓	✓	✓	✓	✓	✓	Not for:	IEC IE1 Eagle Line	④ ⑦, ⑧
60 Hz 400 VΔ [1]			–	–	–	✓	✓	✓	✓	✓	✓	✓	✓	Only for:	Eagle Line	⑦, ⑧
Multi-voltage at 60 Hz and required power at 60 Hz																
60 Hz 230 VYY/460 VY; 50 Hz power, 9 main terminals and electrical version according to NEMA	**6**	**0**	–	–	–	–	–	–	–	–	–	✓	✓	Not for:	IEC IE1 APAC Line IE2	④ ⑥
60 Hz 230 VYY/460 VY; 60 Hz power, 9 main terminals and electrical version according to NEMA	**6**	**1**	–	–	–	–	–	–	–	–	–	✓	✓	Not for:	IEC IE1 APAC Line IE2	④ ⑥
60 Hz 230 VΔΔ/460 VΔ; 50 Hz power, 12 main terminals and electrical version according to NEMA	**6**	**2**	–	–	–	–	–	–	–	–	–	✓	✓	Not for:	IEC IE1 APAC Line IE2	④ ⑥
60 Hz 230 VΔΔ/460 VΔ; 60 Hz power, 12 main terminals and electrical version according to NEMA	**6**	**3**	–	–	–	–	–	–	–	–	–	✓	✓	Not for:	IEC/IE1 APAC Line IE2	④ ⑥

For legends and footnotes, see page 2/86.

© Siemens AG 2018

Article No. supplements and special versions

SIMOTICS GP 1LE1 standard motors

Voltages · Aluminum series 1LE10

Voltages	Article No. supplement			Frame size										Motor version		
	Voltage code 12th and 13th position of the Article No.		Additional identification code withorder code and plain text if required	63	71	80	90	100	112	132	160	180	200			
								1LE1004						IEC	IE4	①
						1LE1003									IE3	②
				1LE1001											IE2	③
				1LE1002											IE1	④
						1LE1043								APAC Line	IE3	⑤
						1LE1041									IE2	⑥
						1LE1023								Eagle Line	NPE (NEMA)	⑦
1LE10 . . - . . . . ■ - ■ . . .			Order code				1LE1021								NEE (NEMA)	⑧
Voltage at 60 Hz and required power at 60 Hz																
220 VΔ/380 VY; 50 Hz power	**9**	**0**	**M2A**	✓	✓	✓	✓	✓	✓	✓	✓	✓	✓			
220 VΔ/380 VY; 60 Hz power	**9**	**0**	**M1A**	✓	✓	✓	✓	✓	✓	✓	✓	✓	✓	Not for:	APAC Line Eagle Line	⑤, ⑥ ⑦, ⑧
380 VΔ/660 VY; 50 Hz power [1]	**9**	**0**	**M2B**	✓	✓	✓	✓	✓	✓	✓	✓	✓	✓	Not for:	APAC Line Eagle Line	⑤, ⑥ ⑦, ⑧
380 VΔ; 50 Hz power [1]				–	–	–	–	✓	✓	✓	✓	✓	✓	Only for:	APAC Line Eagle Line	⑤, ⑥ ⑦, ⑧
380 VΔ/660 VY; 60 Hz power [1] [5]	**9**	**0**	**M1B**	✓	✓	✓	✓	✓	✓	✓	✓	✓	✓	Not for:	APAC Line Eagle Line	⑤, ⑥ ⑦, ⑧
440 VY; 50 Hz power	**9**	**0**	**M2C**	✓	✓	✓	✓	✓	✓	✓	✓	✓	✓			
440 VY; 60 Hz power	**9**	**0**	**M1C**	✓	✓	✓	✓	✓	✓	✓	✓	✓	✓	Not for:	APAC Line Eagle Line	⑤, ⑥ ⑦, ⑧
440 VΔ; 50 Hz power	**9**	**0**	**M2D**	✓	✓	✓	✓	✓	✓	✓	✓	✓	✓			
440 VΔ; 60 Hz power	**9**	**0**	**M1D**	✓	✓	✓	✓	✓	✓	✓	✓	✓	✓	Not for:	APAC Line Eagle Line	⑤, ⑥ ⑦, ⑧
460 VY; 50 Hz power	**9**	**0**	**M2E**	✓	✓	✓	✓	✓	✓	✓	✓	✓	✓			
460 VY; 60 Hz power	**9**	**0**	**M1E**	○	○	○	○	○	○	○	○	○	○	Not for:	APAC Line Eagle Line	⑤, ⑥ ⑦, ⑧
460 VΔ; 50 Hz power	**9**	**0**	**M2F**	✓	✓	✓	✓	✓	✓	✓	✓	✓	✓			
460 VΔ; 60 Hz power	**9**	**0**	**M1F**	○	○	○	○	○	○	○	○	○	○	Not for:	APAC Line Eagle Line	⑤, ⑥ ⑦, ⑧
575 VY; 50 Hz power [7]	**9**	**0**	**M2G**	✓	✓	✓	✓	✓	✓	✓	✓	✓	✓	Not for:	IEC IE4	①
575 VY; 60 Hz power [7]	**9**	**0**	**M1G**	✓	✓	✓	✓	✓	✓	✓	✓	✓	✓	Not for:	APAC Line Eagle Line	⑤, ⑥ ⑦, ⑧
575 VΔ; 50 Hz power [7]	**9**	**0**	**M2H**	✓	✓	✓	✓	✓	✓	✓	✓	✓	✓	Not for:	IEC IE4	①
575 VΔ; 60 Hz power [7]	**9**	**0**	**M1H**	✓	✓	✓	✓	✓	✓	✓	✓	✓	✓	Not for:	APAC Line Eagle Line	⑤, ⑥ ⑦, ⑧
400 VΔ/690 VY; 50 Hz power [1]	**9**	**0**	**M2J**	✓	✓	✓	✓	✓	✓	✓	✓	✓	✓	Not for:	Eagle Line	⑦, ⑧
400 VΔ; 50 Hz power				–	–	✓	✓	✓	✓	✓	✓	✓	✓	Only for:	Eagle Line	⑦, ⑧
400 VΔ/690 VY; 60 Hz power	**9**	**0**	**M1J**	✓	✓	✓	✓	✓	✓	✓	✓	✓	✓	Not for:	Eagle Line	⑦, ⑧
480 VY; 50 Hz power	**9**	**0**	**M2K**	✓	✓	✓	✓	✓	✓	✓	✓	✓	✓			
480 VY; 60 Hz power	**9**	**0**	**M1K**	✓	✓	✓	✓	✓	✓	✓	✓	✓	✓	Not for:	Eagle Line	⑦, ⑧
480 VΔ; 50 Hz power	**9**	**0**	**M2L**	✓	✓	✓	✓	✓	✓	✓	✓	✓	✓			
480 VΔ; 60 Hz power	**9**	**0**	**M1L**	✓	✓	✓	✓	✓	✓	✓	✓	✓	✓	Not for:	Eagle Line	⑦, ⑧
230 VΔ/400 VY; 50 Hz power	**9**	**0**	**M2M**	✓	✓	✓	✓	✓	✓	✓	✓	✓	✓			
230 VΔ/400 VY; 60 Hz power	**9**	**0**	**M1M**	✓	✓	✓	✓	✓	✓	✓	✓	✓	✓	Not for:	Eagle Line	⑦, ⑧
Voltage at 87 Hz and 87 Hz power																
400 VΔ [5]	**9**	**0**	**M3A**	–	–	✓	✓	✓	✓	✓	✓	✓	✓			
Non-standard voltage and/or frequencies																
Non-standard winding [6]	**9**	**0**	**M1Y** • and customer specifications	✓	✓	✓	✓	✓	✓	✓	✓	✓	✓			

□ Standard version
○ Without additional charge
• This order code only determines the price of the version – Additional plain text is required.
✓ With additional charge
– Not possible

1) For North America export versions Eagle Line 1LE1021 NEMA Energy Efficient and 1LE1023 NEMA Premium Efficient, voltages above 600 V will not be stamped.

2) Frame sizes 80 and 90 with voltage code 02 can only be supplied without motor protection (motor protection code A).

3) Delta connection is not possible.

4) Star connection is not possible.

5) Only possible for 4-pole, 6-pole and 8-pole motors. The operating data for converter operation is also provided in a table on the rating plate.

6) Plain text must be specified in the order: Voltage between 200 and 690 V (voltages outside this range are available on request), frequency, circuit, for 60 Hz additionally required rated power in kW.

7) Not possible for 2-pole and 4-pole motors with increased power (11th position of the Article No.: 6) in frame sizes 80 and 90.

© Siemens AG 2018

Selection and ordering data

Voltages	Article No. supplement			Frame size						Motor version
	Voltage code 12th and 13th position of the Article No.		Additional identification code withorder code and plain text if required	100	112	132	160	180	200	
				1LE1011						Pole-changing
				1LE1012						
1LE10 . . - . . . . ■ - ■ . . .			Order code							
Voltage at 50 Hz and 50 Hz power										
230 V	**2**	**2**	**–**	□	□	□	□	□	□	
400 V	**3**	**4**	**–**	□	□	□	□	□	□	
500 V	**4**	**0**	**–**	○	○	○	○	○	○	
690 V	**4**	**7**	**–**	○	○	○	○	○	○	
Voltage at 60 Hz and required power										
220 V; 50 Hz power	**9**	**0**	**M5K**	O. R.	O. R.	O. R.	O. R.	O. R.	O. R.	
220 V; 60 Hz power	**9**	**0**	**M5C**	O. R.	O. R.	O. R.	O. R.	O. R.	O. R.	
380 V; 50 Hz power	**9**	**0**	**M5L**	O. R.	O. R.	O. R.	O. R.	O. R.	O. R.	
380 V; 60 Hz power	**9**	**0**	**M5D**	O. R.	O. R.	O. R.	O. R.	O. R.	O. R.	
440 V; 50 Hz power	**9**	**0**	**M5M**	O. R.	O. R.	O. R.	O. R.	O. R.	O. R.	
440 V; 60 Hz power	**9**	**0**	**M5E**	O. R.	O. R.	O. R.	O. R.	O. R.	O. R.	
460 V; 50 Hz power	**9**	**0**	**M5N**	O. R.	O. R.	O. R.	O. R.	O. R.	O. R.	
460 V; 60 Hz power	**9**	**0**	**M5F**	O. R.	O. R.	O. R.	O. R.	O. R.	O. R.	
575 V; 50 Hz power	**9**	**0**	**M5P**	O. R.	O. R.	O. R.	O. R.	O. R.	O. R.	
575 V; 60 Hz power	**9**	**0**	**M5G**	O. R.	O. R.	O. R.	O. R.	O. R.	O. R.	
Non-standard voltage and/or frequencies										
Non-standard winding [1]	**9**	**0**	**M1Y** • and customer specifications	✓	✓	✓	✓	✓	✓	

□ Standard version
○ Without additional charge
• This order code only determines the price of the version – Additional plain text is required.
✓ With additional charge
O. R. Possible on request

[1] Plain text must be specified in the order: Voltage between 200 and 690 V (voltages outside this range are available on request), frequency, circuit, for 60 Hz additionally required rated power in kW.

© Siemens AG 2018

2

Selection and ordering data

Voltages	Article No. supplement: Voltage code 12th and 13th position of the Article No.		Additional identification code with order code and plain text if required	Frame size: 71	80	90	100	112	132	160	180	200	225	250	280	315	Motor version		
							1LE1504 Basic Line										IEC	IE4	①
							1LE1604 Performance Line												②
				1LE1503 Basic Line														IE3	③
							1LE1603 Performance Line												④
				1LE1501 Basic Line														IE2	⑤
							1LE1601 Performance Line												⑥
							1LE1502 Basic Line											IE1	⑦
					1LE1543 Basic Line												APAC Line	IE3	⑧
							1LE1643 Performance Line												⑨
											1LE1541 Basic Line							IE2	⑩
				1LE1523 Basic Line													Eagle Line	NPE (NEMA)	⑪
							1LE1623 Performance Line												⑫
1LE1 . . . - . . . . ■ - ■ . . .			Order code				1LE1521 Basic Line											NEE (NEMA)	⑬
Voltage at 50 Hz or 60 Hz																			
50 Hz 230 VΔ/400 VY, 60 Hz 460 VY	**2**	**2**	–	□	□	□	□	□	□	□	□	□	□	□	□	□			
50 Hz 400 VΔ/690 VY, 60 Hz 460 VΔ [1]	**3**	**4**	–	□	□	□	□	□	□	□	□	□	□	□	□	□	Not for:	APAC Line ⑧, ⑨, ⑩ Eagle Line ⑪, ⑫, ⑬	
50 Hz 400 VΔ, 60 Hz 460 VΔ [1]				□	□	□	□	□	□	□	□	□	□	□	□	□	Only for:	APAC Line ⑧, ⑨, ⑩ Eagle Line ⑪, ⑫, ⑬	
50 Hz 400 VY, 60 Hz 460 VY [2] [3]	**0**	**2**	–	□	□	□	□	□	□	□	□	□	□	□	O.R.				
50 Hz 400 VΔ, 60 Hz 460 VΔ [4]	**0**	**4**	–	□	□	□	□	□	□	□	□	□	□	□	□	□			
50 Hz 500 VY/575 VY	**2**	**7**	–	○	○	○	○	○	○	○	○	○	○	○	○	○	Not for:	IEC IE4 ①, ② frame sizes 100 … 160	
50 Hz 500 VΔ, 60 Hz 575 VΔ	**4**	**0**	–	–	–	–	○	○	○	○	○	○	○	○	○	○	Not for:	IEC IE4 ①, ② frame sizes 100 … 160	
50 Hz 220 VΔ/380 VY, 60 Hz 440 VY	**2**	**1**	–	✓	✓	✓	✓	✓	✓	✓	✓	✓	✓	✓	✓	✓			
50 Hz 380 VΔ/660 VY, 60 Hz 440 VΔ [1]	**3**	**3**	–	✓	✓	✓	✓	✓	✓	✓	✓	✓	✓	✓	✓	✓	Not for:	APAC Line ⑧, ⑨, ⑩ Eagle Line ⑪, ⑫, ⑬	
50 Hz 380 VΔ [1]				✓	✓	✓	✓	✓	✓	✓	✓	✓	✓	✓	✓	✓	Only for:	APAC Line ⑧, ⑨, ⑩ Eagle Line ⑪, ⑫, ⑬	
50 Hz 240 VΔ/415 VY, 60 Hz 480 VY	**2**	**3**	–	✓	✓	✓	✓	✓	✓	✓	✓	✓	✓	✓	✓	✓			
50 Hz 415 VΔ, 60 Hz 480 VΔ	**3**	**5**	–	✓	✓	✓	✓	✓	✓	✓	✓	✓	✓	✓	✓	✓			
60 Hz 220 VΔ/380 VY	**1**	**7**	–	✓	✓	✓	✓	✓	✓	✓	✓	✓	✓	✓	✓	O.R.			
60 Hz 230 VΔ/400 VY	**1**	**8**	–	✓	✓	✓	✓	✓	✓	✓	✓	✓	✓	✓	✓	O.R.			
60 Hz 380 VΔ/660 VY [1]	**3**	**0**	–	✓	✓	✓	✓	✓	✓	✓	✓	✓	✓	✓	✓	✓	Not for:	IEC IE1 ⑦ Eagle Line ⑪, ⑫	
60 Hz 380 VΔ [1]				✓	✓	✓	✓	✓	✓	✓	✓	✓	✓	✓	✓	✓	Only for:	IEC IE1 ⑦ Eagle Line ⑪, ⑫	
60 Hz 400 VΔ/690 VY [1]	**3**	**1**	–	✓	✓	✓	✓	✓	✓	✓	✓	✓	✓	✓	✓	✓	Not for:	IEC IE1 ⑦ Eagle Line ⑪, ⑫	
60 Hz 400 VΔ [1]				✓	✓	✓	✓	✓	✓	✓	✓	✓	✓	✓	✓	✓	Only for:	IEC IE1 ⑦ Eagle Line ⑪, ⑫	
Voltage at 60 Hz and required power																			
220 VΔ/380 VY; 50 Hz power	**9**	**0**	**M2A**	✓	✓	✓	✓	✓	✓	✓	✓	✓	✓	✓	✓	✓			
220 VΔ/380 VY; 60 Hz power [2]	**9**	**0**	**M1A**	✓	✓	✓	✓	✓	✓	✓	✓	✓	✓	✓	✓	✓	Not for:	APAC Line ⑧, ⑨, ⑩ Eagle Line ⑪, ⑫, ⑬	
380 VΔ/660 VY; 50 Hz power [1]	**9**	**0**	**M2B**	–	–	–	✓	✓	✓	✓	✓	✓	✓	✓	✓	✓	Not for:	APAC Line ⑧, ⑨, ⑩ Eagle Line ⑪, ⑫, ⑬	
380 VΔ; 50 Hz power [1]				–	–	–	✓	✓	✓	✓	✓	✓	✓	✓	✓	✓	Only for:	APAC Line ⑧, ⑨, ⑩ Eagle Line ⑪, ⑫, ⑬	
380 VΔ/660 VY; 60 Hz power [1] [2]	**9**	**0**	**M1B**	–	–	–	✓	✓	✓	✓	✓	✓	✓	✓	✓	✓	Not for:	APAC Line ⑧, ⑨, ⑩ Eagle Line ⑪, ⑫, ⑬	
440 VY; 50 Hz power	**9**	**0**	**M2C**	–	–	–	✓	✓	✓	✓	✓	✓	✓	✓	✓	✓			
440 VY; 60 Hz power [2]	**9**	**0**	**M1C**	–	–	–	✓	✓	✓	✓	✓	✓	✓	✓	✓	✓	Not for:	APAC Line ⑧, ⑨, ⑩ Eagle Line ⑪, ⑫, ⑬	
440 VΔ; 50 Hz power	**9**	**0**	**M2D**	–	–	–	✓	✓	✓	✓	✓	✓	✓	✓	✓	✓			
440 VΔ; 60 Hz power [2]	**9**	**0**	**M1D**	–	–	–	✓	✓	✓	✓	✓	✓	✓	✓	✓	✓	Not for:	APAC Line ⑧, ⑨, ⑩ Eagle Line ⑪, ⑫, ⑬	
460 VY; 50 Hz power	**9**	**0**	**M2E**	–	–	–	✓	✓	✓	✓	✓	✓	✓	✓	✓	✓			

For legends and footnotes, see page 2/89.

© Siemens AG 2018

Voltages · Cast-iron series 1LE15 Basic Line, 1LE16 Performance Line

Voltages	Article No. supplement: Voltage code 12th and 13th position of the Article No.		Additional identification code with order code and plain text if required	Frame size: 71	80	90	100	112	132	160	180	200	225	250	280	315	Motor version		
							1LE1504 Basic Line										IEC	IE4	①
							1LE1604 Performance Line												②
				1LE1503 Basic Line														IE3	③
							1LE1603 Performance Line												④
				1LE1501 Basic Line														IE2	⑤
							1LE1601 Performance Line												⑥
							1LE1502 Basic Line											IE1	⑦
					1LE1543 Basic Line												APAC Line	IE3	⑧
							1LE1643 Performance Line												⑨
											1LE1541 Basic Line							IE2	⑩
				1LE1523 Basic Line													Eagle Line	NPE (NEMA)	⑪
							1LE1623 Performance Line												⑫
1LE1 . . . - . . . . ■ - ■ . . .			Order code				1LE1521 Basic Line											NEE (NEMA)	⑬
Voltage at 60 Hz and required power (continued)																			
460 VY; 60 Hz power [2]	**9**	**0**	**M1E**	–	–	–	○	○	○	○	○	○	○	○	○	○	Not for:	APAC Line ⑧, ⑨, ⑩ Eagle Line ⑪, ⑫, ⑬	
460 VΔ; 50 Hz power	**9**	**0**	**M2F**	–	–	–	✓	✓	✓	✓	✓	✓	✓	✓	✓	✓			
460 VΔ; 60 Hz power [2]	**9**	**0**	**M1F**	–	–	–	○	○	○	○	○	○	○	○	○	○	Not for:	APAC Line ⑧, ⑨, ⑩ Eagle Line ⑪, ⑫, ⑬	
575 VY; 50 Hz power	**9**	**0**	**M2G**	–	–	–	✓	✓	✓	✓	✓	✓	✓	✓	✓	✓	Not for:	IEC IE4 ①, ② frame sizes 100 … 160	
575 VY; 60 Hz power [2]	**9**	**0**	**M1G**	–	–	–	✓	✓	✓	✓	✓	✓	✓	✓	✓	✓	Not for:	⑩, ⑪, ⑫, ⑬ and ①, ② frame sizes 100 … 160	
575 VΔ; 50 Hz power	**9**	**0**	**M2H**	–	–	–	✓	✓	✓	✓	✓	✓	✓	✓	✓	✓	Not for:	IEC IE4 ①, ② frame sizes 100 … 160	
575 VΔ; 60 Hz power [2]	**9**	**0**	**M1H**	–	–	–	✓	✓	✓	✓	✓	✓	✓	✓	✓	✓	Not for:	⑩, ⑪, ⑫, ⑬ and ①, ② frame sizes 100 … 160	
400 VΔ/690 VY; 50 Hz power [1]	**9**	**0**	**M2J**	✓	✓	✓	✓	✓	✓	✓	✓	✓	✓	✓	✓	✓	Not for:	IEC IE1 ⑦ Eagle Line ⑪, ⑫	
400 VΔ; 50 Hz power [1]				✓	✓	✓	✓	✓	✓	✓	✓	✓	✓	✓	✓	✓	Only for:	IEC IE1 ⑦ Eagle Line ⑪, ⑫	
400 VΔ/690 VY; 60 Hz power	**9**	**0**	**M1J**	✓	✓	✓	✓	✓	✓	✓	✓	✓	✓	✓	✓	✓	Not for:	IEC IE1 ⑦ Eagle Line ⑪, ⑫	
480 VY; 50 Hz power	**9**	**0**	**M2K**	✓	✓	✓	✓	✓	✓	✓	✓	✓	✓	✓	✓	✓			
480 VY; 60 Hz power	**9**	**0**	**M1K**	✓	✓	✓	✓	✓	✓	✓	✓	✓	✓	✓	✓	✓	Not for:	IEC IE1 ⑦ Eagle Line ⑪, ⑫	
480 VΔ; 50 Hz power	**9**	**0**	**M2L**	✓	✓	✓	✓	✓	✓	✓	✓	✓	✓	✓	✓	✓			
480 VΔ; 60 Hz power	**9**	**0**	**M1L**	✓	✓	✓	✓	✓	✓	✓	✓	✓	✓	✓	✓	✓	Not for:	IEC IE1 ⑦ Eagle Line ⑪, ⑫	
230 VΔ/400 VY; 50 Hz power	**9**	**0**	**M2M**	✓	✓	✓	✓	✓	✓	✓	✓	✓	✓	✓	✓	O. R.			
230 VΔ/400 VY; 60 Hz power	**9**	**0**	**M1M**	✓	✓	✓	✓	✓	✓	✓	✓	✓	✓	✓	✓	O. R.	Not for:	IEC IE1 ⑦ Eagle Line ⑪, ⑫	
Voltage at 87 Hz and 87 Hz power																			
400 VΔ [5]	**9**	**0**	**M3A**	✓	✓	✓	✓	✓	✓	✓	✓	✓	✓	✓	✓	✓			
Non-standard voltage and/or frequencies																			
Non-standard winding [6]	**9**	**0**	**M1Y** • and customer specifications	✓	✓	✓	✓	✓	✓	✓	✓	✓	✓	✓	✓	✓			

□ Standard version
○ Without additional charge
• This order code only determines the price of the version – Additional plain text is required.
✓ With additional charge
O. R. Possible on request

1) For North America export versions Eagle Line 1LE1521 NEMA Energy Efficient and 1LE1523/1LE1623 NEMA Premium Efficient, voltages above 600 V will not be stamped.

2) Not admissible for North America export versions Eagle Line 1LE1521 NEMA Energy Efficient and 1LE1523/1LE1623 NEMA Premium Efficient.

3) Delta connection is not possible.

4) Star connection is not possible.

5) Only possible for 4-pole, 6-pole and 8-pole motors. The operating data for converter operation is also provided in a table on the rating plate.

6) Plain text must be specified in the order: Voltage between 200 and 690 V (voltages outside this range are available on request), frequency, circuit, for 60 Hz additionally required rated power in kW.

© Siemens AG 2018

2

Selection and ordering data

Types of construction		Article No. supplement: Type of construction code letter 14th position of the Article No.	Article No. supplement: For types of construction with order code(s) Article No. with additional identification code -Z	Frame size: 63	71	80	90	100	112	132	160	180	200	Motor version
								1LE1004						IEC IE4 ①
						1LE1003								IEC IE3 ②
				1LE1001										IEC IE2 ③
				1LE1002										IEC IE1 ④
						1LE1043								APAC Line IE3 ⑤
						1LE1041								APAC Line IE2 ⑥
						1LE1023								Eagle Line NPE (NEMA) ⑦
							1LE1021							Eagle Line NEE (NEMA) ⑧
								1LE1011						Pole-changing ⑨
1LE10 . . - . . . . . - . ■ . . (-Z)			Order code					1LE1012						⑩
Without flange														
IM B3 [1) 2) 3)]		**A**	**–**	□	□	□	□	□	□	□	□	□	□	Not for: APAC Line IE2 ⑥, Eagle Line NEE ⑧
IM B6 [2) 3)]	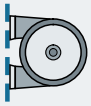	**T**	**–**	□	□	□	□	□	□	□	□	□	□	Not for: APAC Line IE2 ⑥, Eagle Line NEE ⑧
IM B7 [2) 3) 9)]	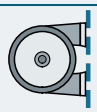	**U**	**–**	□	□	□	□	□	□	□	□	□	□	Not for: APAC Line IE2 ⑥, Eagle Line NEE ⑧
IM B8 [2) 3)]		**V**	**–**	□	□	□	□	□	□	□	□	□	□	Not for: APAC Line IE2 ⑥, Eagle Line NEE ⑧
IM V6 [2) 3)]	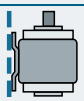	**D**	**–**	□	□	□	□	□	□	□	□	□	□	Not for: APAC Line IE2 ⑥, Eagle Line NEE ⑧
IM V5 without protective cover [2) 3)]	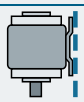	**C**	**–**	□	□	□	□	□	□	□	□	□	□	Not for: APAC Line IE2 ⑥, Eagle Line NEE ⑧
IM V5 with protective cover [2) 3) 4) 5) 6)]	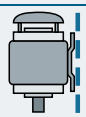	**C**	**H00**	–	–	✓	✓	✓	✓	✓	✓	✓	✓	Not for: APAC Line IE2 ⑥, Eagle Line NEE ⑧, Combination with order code F90
With flange		**EN 50347 DIN 42948**		**FF115 A 140**	**FF130 A 160**	**FF165 A 200**	**FF165 A 200**	**FF215 A 250**	**FF215 A 250**	**FF265 A 300**	**FF300 A 350**	**FF300 A 350**	**FF350 A 400**	
IM B5 [2) 7)]	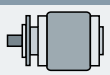	**F**	**–**	✓	✓	✓	✓	✓	✓	✓	✓	✓	✓	
IM V1 without protective cover [2)]		**G**	**–**	✓	✓	✓	✓	✓	✓	✓	✓	✓	✓	
IM V1 with protective cover [2) 4) 5) 6)]	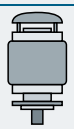	**G**	**H00**	–	–	✓	✓	✓	✓	✓	✓	✓	✓	Not for: Combination with order code F90
IM V3 [4)]		**H**	**–**	✓	✓	✓	✓	✓	✓	✓	✓	✓	✓	
IM B35 [3)]	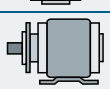	**J**	**–**	✓	✓	✓	✓	✓	✓	✓	✓	✓	✓	Not for: APAC Line IE2 ⑥, Eagle Line NEE ⑧

For legends and footnotes, see page 2/93.

© Siemens AG 2018

Types of construction	Article No. supplement: Type of construction code letter 14th position of the Article No.	For types of construction with order code(s) Article No. with additional identification code -Z	Frame size: 63	71	80	90	100	112	132	160	180	200	Motor version	
							1LE1004						IEC	IE4 ①
					1LE1003									IE3 ②
			1LE1001											IE2 ③
			1LE1002											IE1 ④
					1LE1043								APAC Line	IE3 ⑤
					1LE1041									IE2 ⑥
					1LE1023								Eagle Line	NPE (NEMA) ⑦
						1LE1021								NEE (NEMA) ⑧
							1LE1011						Pole-changing	⑨
1LE10 . . - . . . . . - . ■ . . (-Z)		Order code					1LE1012							⑩
With special flange next largest	**EN 50347 / DIN 42948**		– / –	– / –	– / –	– / –	**FF265 / A 300**	**FF265 / A 300**	**FF300 / A 350**	– / –	– / –	– / –		
IM B5 [2) 7)] 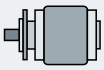	**F**	**P01**	–	–	–	–	✓	✓	✓	–	–	–		
IM V1 without protective cover [2)]	**G**	**P01**	–	–	–	–	✓	✓	✓	–	–	–		
IM V1 with protective cover [2) 4) 5) 6)]	**G**	**P01+H00**	–	–	–	–	✓	✓	✓	–	–	–	Not for:	Combination with order code F90
IM V3 [4)]	**H**	**P01**	–	–	–	–	✓	✓	✓	–	–	–		
IM B35 [3)] 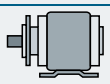	**J**	**P01**	–	–	–	–	✓	✓	✓	–	–	–	Not for:	APAC Line IE2 ⑥ Eagle Line NEE ⑧
With special flange next smallest	**EN 50347 / DIN 42948**		– / –	– / –	**FF130 / A 160**	**FF165 / A 200**	**FF165 / A 200**	**FF165 / A 200**	**FF215 / A 250**	**FF265 / A 300**	**FF265 / A 300**	**FF300 / A 350**		
IM B5 [2) 7)] 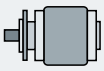	**F**	**P02**	–	–	O. R.	O. R.	✓	✓	✓	✓	✓	✓		
IM V1 without protective cover [2)]	**G**	**P02**	–	–	–	–	O. R.	O. R.	O. R.	O. R.	O. R.	O. R.		
IM V1 with protective cover [2) 4) 5) 6)]	**G**	**P02+H00**	–	–	–	–	O. R.	O. R.	O. R.	O. R.	O. R.	O. R.	Not for:	Combination with order code F90
IM V3 [4)]	**H**	**P02**	–	–	–	–	O. R.	O. R.	O. R.	O. R.	O. R.	O. R.	All	All
IM B35 [3)] 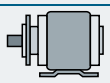	**J**	**P02**	–	–	–	–	O. R.	O. R.	O. R.	O. R.	O. R.	O. R.	Not for:	APAC Line IE2 ⑥ Eagle Line NEE ⑧

For legends and footnotes, see page 2/93.

© Siemens AG 2018

Article No. supplements and special versions

SIMOTICS GP 1LE1 standard motors

Types of construction · Aluminum series 1LE10

Types of construction	Article No. supplement: Type of construction code letter 14th position of the Article No.	Article No. supplement: For types of construction with order code(s) Article No. with additional identification code -Z	Frame size: 63	71	80	90	100	112	132	160	180	200	Motor version		
							1LE1004						IEC	IE4	①
					1LE1003									IE3	②
			1LE1001											IE2	③
			1LE1002											IE1	④
					1LE1043								APAC Line	IE3	⑤
					1LE1041									IE2	⑥
					1LE1023								Eagle Line	NPE (NEMA)	⑦
						1LE1021								NEE (NEMA)	⑧
							1LE1011						Pole-changing		⑨
1LE10 . . - . . . . . - . ■ . . (-Z)		Order code					1LE1012								⑩

With flange	EN 50347 DIN 42948		FT75 C 90	FT85 C 105	FT100 C 120	FT115 C 140	FT130 C 160	FT130 C 160	FT165 C 200	FT215 C 250	– –	– –	
IM B14 [2) 8)]	K	–	✓	✓	✓	✓	✓	✓	✓	✓	–	–	
IM V19 [2)]	L	–	✓	✓	✓	✓	✓	✓	✓	✓	–	–	
IM V18 without protective cover [2)] 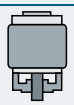	M	–	✓	✓	✓	✓	✓	✓	✓	✓	–	–	
IM V18 with protective cover [2) 4) 5) 6)] 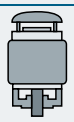	M	H00	–	–	✓	✓	✓	✓	✓	✓	–	–	Not for: Combination with order code F90
IM B34 [3)] 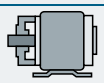	N	–	✓	✓	✓	✓	✓	✓	✓	✓	–	–	Not for: Eagle Line NEE ⑧
With special flange next largest [10)]	EN 50347 DIN 42948		– –	– –	FT130 C 160	FT130 C 160	FT165 C 200	FT165 C 200	FT215 C 250	– –	– –	– –	
IM B14 [2) 8)] 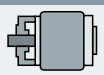	K	P01	–	–	✓	✓	✓	✓	✓	–	–	–	
IM V19 [2)] 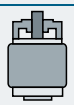	L	P01	–	–	✓	✓	✓	✓	✓	–	–	–	
IM V18 without protective cover [2)] 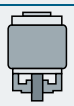	M	P01	–	–	✓	✓	✓	✓	✓	–	–	–	
IM V18 with protective cover [2) 4) 5) 6)] 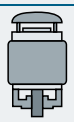	M	P01+H00	–	–	✓	✓	✓	✓	✓	–	–	–	Not for: Combination with order code F90
IM B34 [3)] 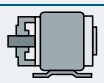	N	P01	–	–	✓	✓	✓	✓	✓	–	–	–	Not for: APAC Line IE2 ⑥ Eagle Line NEE ⑧

For legends and footnotes, see page 2/93.

© Siemens AG 2018

Types of construction	Article No. supplement: Type of construction code letter 14th position of the Article No.	Article No. supplement: For types of construction with order code(s) Article No. with additional identification code **-Z**	Frame size: 63	71	80	90	100	112	132	160	180	200	Motor version		
							1LE1004						IEC	IE4	①
					1LE1003									IE3	②
			1LE1001											IE2	③
			1LE1002											IE1	④
					1LE1043								APAC Line	IE3	⑤
					1LE1041									IE2	⑥
					1LE1023								Eagle Line	NPE (NEMA)	⑦
						1LE1021								NEE (NEMA)	⑧
							1LE1011						Pole-changing		⑨
1LE10 . . -. . . . . -. ■ . . (-Z)		Order code					1LE1012								⑩
With special flange next smallest	**EN 50347 DIN 42948**		– –	– –	– –	– –	**FT115 C 140**	**FT115 C 140**	**FT130 C 160**	**FT165 C 200**	– –	– –			
IM B14 [2) 8)]	**K**	**P02**	–	–	–	–	O. R.	O. R.	O. R.	O. R.	–	–	Not for:	EC IE4	①
IM V19 [2)] 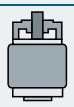	**L**	**P02**	–	–	–	–	O. R.	O. R.	O. R.	O. R.	–	–	Not for:	IEC IE4	①
IM V18 without protective cover [2)] 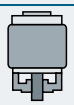	**M**	**P02**	–	–	–	–	O. R.	O. R.	O. R.	O. R.	–	–	Not for:	IEC IE4	①
IM V18 with protective cover [2) 4) 5) 6)] 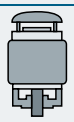	**M**	**P02+H00**	–	–	–	–	O. R.	O. R.	O. R.	O. R.	–	–	Not for:	IEC IE4 Combination with order code F90	①
IM B34 [3)] 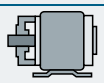	**N**	**P02**	–	–	–	–	O. R.	O. R.	O. R.	O. R.	–	–	Not for:	IEC IE4 APAC Line IE2 Eagle Line NEE	① ⑥ ⑧

□ Standard version
✓ With additional charge
– Not possible
O. R. Possible on request

1) The types of construction IM B6/7/8, IM V6, and IM V5 with/without protective cover are also possible as long as there are no condensation drainage holes (order code **H03**) and these types of construction do not have to be stamped on the rating plate. As standard the type of construction IM B3 is then stamped on the rating plate. With type of construction IM V5 with protective cover, the protective cover has to be additionally ordered with order code **H00**. The protective cover is not stamped on the rating plate.

2) The type of construction is stamped on the rating plate. For orders with condensation drainage holes (order code **H03**), if mounted in a different position, the position must be specified to ensure that the condensation drainage holes are positioned correctly.

3) For North America export version Eagle Line 1LE1021 NEMA Energy Efficient, types of construction with feet are not possible for 2-pole, 4-pole and 6-pole motors ≤ 200 hp in accordance with NEMA MG1 Table 12-11.

4) The "Standard cylindrical shaft extension (second shaft extension)" option (order code **L05**) is not possible.

5) In combination with an encoder, it is not necessary to order the protective cover (order code **H00**), as this is delivered as a protection for the encoder as standard. In this case the protective cover is standard version (without additional charge).

6) Not possible for forced-air cooled 1LE1 motors with order code **F90** without external fan and fan cover.

7) The types of construction IM V3 and IM V1 with/without protective cover are also possible as long as there are no condensation drainage holes (order code **H03**) and these types of construction do not have to be stamped on the rating plate. As standard the type of construction IM B5 is then stamped on the rating plate. With type of construction IM V1 with protective cover, the protective cover has to be additionally ordered with order code **H00**. The protective cover is not stamped on the rating plate.

8) The types of construction IM V19 and IM V18 with/without protective cover are also possible as long as there are no condensation drainage holes (order code **H03**) and these types of construction do not have to be stamped on the rating plate. As standard the type of construction IM B14 is then stamped on the rating plate. With type of construction IM V18 with protective cover, the protective cover has to be additionally ordered with order code **H00**. The protective cover is not stamped on the rating plate.

9) When ordering frame size B7 and the required cable outlet below, option **R12** must also be ordered.

10) For the standard EN 50347, flanges which are 2 levels larger are used in frame size 80 with option **P01**.

© Siemens AG 2018

2

Selection and ordering data

Types of construction		Article No. supplement: Type of construction code letter 14th position of the Article No.	Article No. supplement: For types of construction with order code(s) Article No. with additional identification code -Z	Frame size: 71	80	90	100	112	132	160	180	200	225	250	280	315 S/M	315 L 2-pole	315 L 4 to 8-pole	Motor version		
							1LE1504 Basic Line												IEC	IE4	①
							1LE1604 Performance Line														②
				1LE1503 Basic Line																IE3	③
							1LE1603 Performance Line														④
				1LE1501 Basic Line																IE2	⑤
							1LE1601 Performance Line														⑥
							1LE1502 Basic Line													IE1	⑦
					1LE1543 Basic Line														APAC Line	IE3	⑧
							1LE1643 Performance Line														⑨
											1LE1541 Basic Line									IE2	⑩
				1LE1523 Basic Line															Eagle Line	NPE (NEMA)	⑪
							1LE1623 Performance Line														⑫
1LE1 . . . - . . . . . - . ■ . . (-Z)			Order code				1LE1521 Basic Line													NEE (NEMA)	⑬
Without flange																					
IM B3 1) 2) 3)		A	–	□	□	□	□	□	□	□	□	□	□	□	□	□	□	□	Not for:	⑩, ⑬ 2, 4, 6-pole ≤ 200 hp; ⑪, ⑫ 8-pole ≤ 200 hp	
IM B6 2) 3)	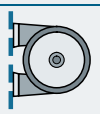	T	–	□	□	□	□	□	□	□	□	□	□	□	□	□	□	□	Not for:	⑩, ⑬ 2, 4, 6-pole ≤ 200 hp; ⑪, ⑫ 8-pole ≤ 200 hp	
IM B7 2) 3) 9)	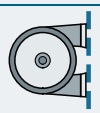	U	–	□	□	□	□	□	□	□	□	□	□	□	□	□	□	□	Not for:	⑩, ⑬ 2, 4, 6-pole ≤ 200 hp; ⑪, ⑫ 8-pole ≤ 200 hp	
IM B8 2) 3)		V	–	□	□	□	□	□	□	□	□	□	□	□	□	□	□	□	Not for:	⑩, ⑬ 2, 4, 6-pole ≤ 200 hp; ⑪, ⑫ 8-pole ≤ 200 hp	
IM V6 2) 3)		D	–	□	□	□	□	□	□	□	□	□	□	□	□	✓	□	Not for:	⑩, ⑬ 2, 4, 6-pole ≤ 200 hp; ⑪, ⑫ 8-pole ≤ 200 hp		
IM V5 without protective cover 2) 3)		C	–	□	□	□	□	□	□	□	□	□	□	□	□	✓	□	Not for:	⑩, ⑬ 2, 4, 6-pole ≤ 200 hp; ⑪, ⑫ 8-pole ≤ 200 hp		
IM V5 with protective cover 2) 3) 4) 5)	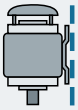	C	H00	✓	✓	✓	✓	✓	✓	✓	✓	✓	✓	✓	✓	✓	✓	✓	Not for:	⑩, ⑬ 2, 4, 6-pole ≤ 200 hp; ⑪, ⑫ 8-pole ≤ 200 hp	

For legends and footnotes, see page 2/97.

© Siemens AG 2018

Types of construction · Cast-iron series 1LE15 Basic Line, 1LE16 Performance Line

Types of construction	Article No. supplement: Type of construction code letter 14th position of the Article No.	Article No. supplement: For types of construction with order code(s) Article No. with additional identification code -Z	Frame size															Motor version		
			71	80	90	100	112	132	160	180	200	225	250	280	315 S/M	315 L 2-pole	315 L 4 to 8-pole			
						1LE1504 Basic Line												IEC	IE4	①
						1LE1604 Performance Line														②
			1LE1503 Basic Line																IE3	③
						1LE1603 Performance Line														④
			1LE1501 Basic Line																IE2	⑤
						1LE1601 Performance Line														⑥
						1LE1502 Basic Line													IE1	⑦
				1LE1543 Basic Line														APAC Line	IE3	⑧
						1LE1643 Performance Line														⑨
										1LE1541 Basic Line									IE2	⑩
			1LE1523 Basic Line															Eagle Line	NPE (NEMA)	⑪
						1LE1623 Performance Line														⑫
1LE1 . . . - . . . . . - . ■ . . (-Z)		Order code				1LE1521 Basic Line													NEE (NEMA)	⑬
With flange	**EN 50347 / DIN 42948**		FF130 A 160	FF165 A 200	FF165 A 200	FF215 A 250	FF215 A 250	FF265 A 300	FF300 A 350	FF300 A 350	FF350 A 400	FF400 A 450	FF500 A 550	FF500 A 550	FF600 A 660	FF600 A 660	FF600 A 660			
IM B5 2) 6) 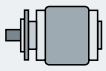	**F**	**–**	✓	✓	✓	✓	✓	✓	✓	✓	✓	✓	✓	✓	✓	–	–			
IM V1 without protective cover 2)	**G**	**–**	✓	✓	✓	✓	✓	✓	✓	✓	✓	✓	✓	✓	✓	✓	✓			
IM V1 with protective cover 2) 4) 5) 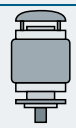	**G**	**H00**	✓	✓	✓	✓	✓	✓	✓	✓	✓	✓	✓	✓	✓	✓	✓			
IM V3 5)	**H**	**–**	✓	✓	✓	✓	✓	✓	✓	✓	✓	✓	✓	✓	✓	–	–			
IM B35 3) 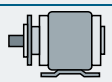	**J**	**–**	✓	✓	✓	✓	✓	✓	✓	✓	✓	✓	✓	✓	✓	✓	✓	Not for:		⑩, ⑬ 2, 4, 6-pole ≤ 200 hp; ⑪, ⑫ 8-pole ≤ 200 hp
With special flange next largest	**EN 50347**		–	–	–	FF265	FF265	FF300	–	–	–	–	–	–	–	–	–			
	DIN 42948		–	–	–	A 300	A 300	A 350	–	–	–	–	–	–	–	–	–			
IM B5 2) 6) 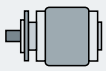	**F**	**P01**	–	–	–	✓	✓	✓	–	–	–	–	–	–	–	–	–			
IM V1 without protective cover 2)	**G**	**P01**	–	–	–	✓	✓	✓	–	–	–	–	–	–	–	–	–			
IM V1 with protective cover 2) 4) 5) 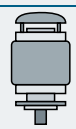	**G**	**P01+ H00**	–	–	–	✓	✓	✓	–	–	–	–	–	–	–	–	–			
IM V3 5)	**H**	**P01**	–	–	–	✓	✓	✓	–	–	–	–	–	–	–	–	–			
IM B35 3) 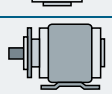	**J**	**P01**	–	–	–	✓	✓	✓	–	–	–	–	–	–	–	–	–	Not for:		⑩, ⑬ 2, 4, 6-pole ≤ 200 hp; ⑪, ⑫ 8-pole ≤ 200 hp; ①, ② on request

For legends and footnotes, see page 2/97.

© Siemens AG 2018

Article No. supplements and special versions
SIMOTICS SD 1LE1 standard motors

Types of construction · Cast-iron series 1LE15 Basic Line, 1LE16 Performance Line

Types of construction		Article No. supplement		Frame size														Motor version		
		Type of construction code letter 14th position of the Article No.	For types of construction with order code(s) Article No. with additional identification code -Z	71	80	90	100	112	132	160	180	200	225	250	280	315 S/M	315 L 2-pole	315 L 4 to 8-pole			
							1LE1504 Basic Line												IEC	IE4	①
							1LE1604 Performance Line														②
				1LE1503 Basic Line																IE3	③
							1LE1603 Performance Line														④
				1LE1501 Basic Line																IE2	⑤
							1LE1601 Performance Line														⑥
							1LE1502 Basic Line													IE1	⑦
					1LE1543 Basic Line														APAC Line	IE3	⑧
							1LE1643 Performance Line														⑨
											1LE1541 Basic Line									IE2	⑩
				1LE1523 Basic Line															Eagle Line	NPE (NEMA)	⑪
							1LE1623 Performance Line														⑫
1LE1 . . . - . . . . . - . ■ . . (-Z)			Order code				1LE1521 Basic Line													NEE (NEMA)	⑬
With special flange next smallest		**EN 50347**		–	–	–	FF165	FF165	FF215	FF265	–	–	–	–	–	–	–	–			
		DIN 42948		–	–	–	A 200	A 200	A 250	A 300	–	–	–	–	–	–	–	–			
IM B5 2) 6)	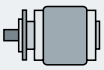	**F**		–	–	–	✓	✓	✓	✓	–	–	–	–	–	–	–	–			
IM V1 without protective cover 2)		**G**		–	–	–	O. R.	O. R.	O. R.	O. R.	–	–	–	–	–	–	–	–			
IM V1 with protective cover 2) 4) 5)	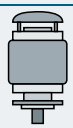	**G**	**P02+ H00**	–	–	–	O. R.	O. R.	O. R.	O. R.	–	–	–	–	–	–	–	–			
IM V3 5)		**H**		–	–	–	O. R.	O. R.	O. R.	O. R.	–	–	–	–	–	–	–	–			
IM B35 3)	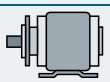	**J**		–	–	–	O. R.	O. R.	O. R.	O. R.	–	–	–	–	–	–	–	–	Not for:	⑩, ⑬ 2, 4, 6-pole ≤ 200 hp; ⑪, ⑫ 8-pole ≤ 200 hp	
With flange		**EN 50347**		FT85	FT100	FT115	FT130	FT130	FT165	FT215	–	–	–	–	–	–	–	–			
		DIN 42948		C 105	C 120	C 140	C 160	C 160	C 200	C 250	–	–	–	–	–	–	–	–			
IM B14 2) 7)	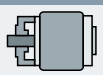	**K**		–	–	–	✓	✓	✓	✓	–	–	–	–	–	–	–	–			
IM V19 2)	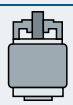	**L**		–	–	–	✓	✓	✓	✓	–	–	–	–	–	–	–	–			
IM V18 without protective cover 2)	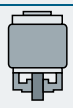	**M**		–	–	–	✓	✓	✓	✓	–	–	–	–	–	–	–	–			
IM V18 with protective cover 2) 4) 5)	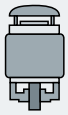	**M**	**H00**	–	–	–	✓	✓	✓	✓	–	–	–	–	–	–	–	–			
IM B34 3)	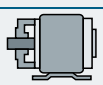	**N**		✓	✓	✓	✓	✓	✓	✓	–	–	–	–	–	–	–	–	Not for:	⑩, ⑬ 2, 4, 6-pole ≤ 200 hp; ⑪, ⑫ 8-pole ≤ 200 hp	

For legends and footnotes, see page 2/97.

© Siemens AG 2018

Types of construction · Cast-iron series 1LE15 Basic Line, 1LE16 Performance Line

Types of construction	Article No. supplement: Type of construction code letter 14th position of the Article No.	Article No. supplement: For types of construction with order code(s) Article No. with additional identification code **-Z**	Frame size														Motor version		
			71	**80**	**90**	**100**	**112**	**132**	**160**	**180**	**200**	**225**	**250**	**280**	**315 S/M**	**315 L 2-pole**	**315 L 4 to 8-pole**			
						1LE1504 Basic Line												IEC	IE4	①
						1LE1604 Performance Line														②
			1LE1503 Basic Line																IE3	③
						1LE1603 Performance Line														④
			1LE1501 Basic Line																IE2	⑤
						1LE1601 Performance Line														⑥
						1LE1502 Basic Line													IE1	⑦
				1LE1543 Basic Line														APAC Line	IE3	⑧
						1LE1643 Performance Line														⑨
										1LE1541 Basic Line									IE2	⑩
			1LE1523 Basic Line															Eagle Line	NPE (NEMA)	⑪
						1LE1623 Performance Line														⑫
1LE1 . . . - . . . . . - . ■ . . (-Z)		Order code				**1LE1521 Basic Line**													NEE (NEMA)	⑬
With special flange next largest	**EN 50347 DIN 42948**		**FT115 C 140**	**FT130 C 160**	**FT130 C 160**	**FT165 C 200**	**FT165 C 200**	**FT215 C 250**	**– –**	**– –**	**– –**	**– –**	**– –**	**– –**	**– –**	**– –**	**– –**			
IM B14 2) 7) 8)	**K**	**P01**	–	–	–	✓	✓	✓	–	–	–	–	–	–	–	–	–			
IM V19 2) 8)	**L**	**P01**	–	–	–	✓	✓	✓	–	–	–	–	–	–	–	–	–			
IM V18 without protective cover 2) 8) 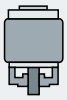	**M**	**P01**	–	–	–	✓	✓	✓	–	–	–	–	–	–	–	–	–			
IM V18 with protective cover 2) 4) 5) 8) 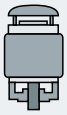	**M**	**P01+ H00**	–	–	–	✓	✓	✓	–	–	–	–	–	–	–	–	–			
IM B34 3) 8) 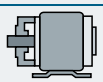	**N**	**P01**	–	–	–	✓	✓	✓	–	–	–	–	–	–	–	–	–	Not for:	⑩, ⑬ 2, 4, 6-pole ≤ 200 hp ⑪, ⑫ 8-pole ≤ 200 hp	

□ Standard version
✓ With additional charge
O. R. Possible on request
– Not possible

1) The types of construction IM B6/7/8, IM V6 and IM V5 with/without protective cover are also possible as long as no stamping of these types of construction on the rating plate is required. As standard the type of construction IM B3 is then stamped on the rating plate. With type of construction IM V5 with protective cover, the protective cover has to be additionally ordered with order code **H00**. The protective cover is not stamped on the rating plate.

2) The type of construction is stamped on the rating plate. If mounted in a different position, the position must be specified to ensure that the condensation drainage holes are positioned correctly.

3) For North America export version Eagle Line 1LE1521
NEMA Energy Efficient, types of construction with feet are not possible for 2-pole, 4-pole and 6-pole motors ≤ 200 hp in accordance with NEMA MG1 Table 12-11.

4) In combination with an encoder, it is not necessary to order the protective cover (order code **H00**), as this is delivered as a protection for the encoder as standard. In this case the protective cover is standard design (without additional charge).

5) The "Standard cylindrical shaft extension (second shaft extension)" option (order code **L05**) is not possible.

6) The types of construction IM V3 and IM V1 with/without protective cover are also possible as long as no stamping of these types of construction on the rating plate is required. As standard the type of construction IM B5 is then stamped on the rating plate. With type of construction IM V1 with protective cover, the protective cover has to be additionally ordered with order code **H00**. The protective cover is not stamped on the rating plate.

7) The types of construction IM V19 and IM V18 with/without protective cover are also possible as long as no stamping of these types of construction on the rating plate is required. As standard the type of construction IM B14 is then stamped on the rating plate. With type of construction IM V18 with protective cover, the protective cover has to be additionally ordered with order code **H00**. The protective cover is not stamped on the rating plate.

8) With reference to standard EN 50347, flanges that are 2 levels larger are used with option **P01** in the frame sizes 71 and 80.

9) When ordering frame size B7 and the required cable outlet below, option **R12** must also be ordered.

© Siemens AG 2018

2

Selection and ordering data

Motor protection	Article No. supplement		Frame size										Motor version		
	Motor protection code letter 15th position of the Article No.	Additional identification code with order code and plain text if required	63	71	80	90	100	112	132	160	180	200			
							1LE1004						IEC	IE4	①
					1LE1003									IE3	②
			1LE1001											IE2	③
			1LE1002											IE1	④
					1LE1043								APAC Line	IE3	⑤
					1LE1041									IE2	⑥
					1LE1023								Eagle Line	NPE (NEMA)	⑦
						1LE1021								NEE (NEMA)	⑧
							1LE1011						Pole-changing		⑨
1LE10 . . - . . . . . - . . ■ .		Order code					1LE1012								⑩
Motor protection															
Without (standard)	**A**	**–**	□	□	□	□	□	□	□	□	□	□			
1 or 3 PTC thermistors – for tripping (2 terminals) [1]	**B**	**–**	✓	✓	✓	✓	✓	✓	✓	✓	✓	✓			
2 or 6 PTC thermistors – for alarm and tripping (4 terminals) [1]	**C**	**–**	✓	✓	✓	✓	✓	✓	✓	✓	✓	✓			
1 KTY84-130 temperature sensor (2 terminals) [1]	**F**	**–**	✓	✓	✓	✓	✓	✓	✓	✓	✓	✓			
2 KTY84-130 temperature sensors (4 terminals) [1]	**G**	**–**	✓	✓	✓	✓	✓	✓	✓	✓	✓	✓			
3 Pt100 resistance thermometers – 2-wire input (6 terminals) [1]	**H**	**–**	–	–	–	–	✓	✓	✓	✓	✓	✓			
1 Pt1000 resistance thermometer (2 terminals) [2]	**K**	**–**	✓	✓	✓	✓	✓	✓	✓	✓	✓	✓			
2 Pt1000 resistance thermometers (4 terminals) [2]	**L**	**–**	✓	✓	✓	✓	✓	✓	✓	✓	✓	✓			
1 Pt100 resistance thermometer – 2-wire input (2 terminals)	**P**	**–**	–	–	–	–	✓	✓	✓	✓	✓	✓			
3 Pt100 resistance thermometers – 3-wire input (9 terminals)	**Q**	**–**	–	–	–	–	✓	✓	✓	✓	✓	✓			
6 Pt100 resistance thermometers – 3-wire input (18 terminals)	**R**	**–**	–	–	–	–	✓	✓	✓	✓	✓	–			
3 NTC thermistors – for tripping (6 terminals) [1]	**Z**	**Q2A**	–	–	–	–	✓	✓	✓	✓	–	–			
3 bimetal sensors (NC contacts) – for tripping (2 terminals) [1]	**Z**	**Q3A**	✓	✓	✓	✓	✓	✓	✓	✓	✓	✓			

□ Standard version
✓ With additional charge
– Not possible

[1] Evaluation with appropriate tripping unit (see Catalog IC 10) is recommended. For pole-changing motors with two separate windings, double the number of temperature sensors or temperature detectors is required. This also results in a double additional charge.

[2] Not UL certified. Not in combination with option **D31**.

© Siemens AG 2018

Selection and ordering data

Motor protection	Article No. supplement		Frame size													Motor version		
	Motor protection code letter 15th position of the Article No.	Additional identification code with order code and plain text if required	71	80	90	100	112	132	160	180	200	225	250	280	315			
						1LE1504 Basic Line										IEC	IE4	①
						1LE1604 Performance Line												②
			1LE1503 Basic Line														IE3	③
						1LE1603 Performance Line												④
			1LE1501 Basic Line														IE2	⑤
						1LE1601 Performance Line												⑥
						1LE1502 Basic Line											IE1	⑦
				1LE1543 Basic Line												APAC Line	IE3	⑧
						1LE1643 Performance Line												⑨
										1LE1541 Basic Line							IE2	⑩
			1LE1523 Basic Line													Eagle Line	NPE (NEMA)	⑪
						1LE1623 Performance Line												⑫
1LE1 . . . - . . . . . - . . ■ .		Order code				1LE1521 Basic Line											NEE (NEMA)	⑬
Motor protection																		
Without (standard) [1]	**A**	–	□	□	□	□	□	□	□	□	□	□	□	□	□	Only for:	Basic Line ①, ③, ⑤, ⑦, ⑧, ⑩, ⑪, ⑬	
1 or 3 PTC thermistors – for tripping (2 terminals) [1] [2]	**B**	–	✓	✓	✓	✓	✓	✓	✓	✓	✓	✓	✓	✓	✓	Only for:	Basic Line ①, ③, ⑤, ⑦, ⑧, ⑩, ⑪, ⑬	
			□	□	□	□	□	□	□	□	□	□	□	□	□	Only for:	Performance Line ②, ④, ⑥, ⑨, ⑫	
2 or 6 PTC thermistors – for alarm and tripping (4 terminals) [2]	**C**	–	✓	✓	✓	✓	✓	✓	✓	✓	✓	✓	✓	✓	✓			
1 KTY84-130 temperature sensor (2 terminals) [2]	**F**	–	✓	✓	✓	✓	✓	✓	✓	✓	✓	✓	✓	✓	✓			
2 KTY84-130 temperature sensor (4 terminals) [2]	**G**	–	✓	✓	✓	✓	✓	✓	✓	✓	✓	✓	✓	✓	✓			
3 Pt100 resistance thermometers – 2-wire input (6 terminals)	**H**	–	✓	✓	✓	✓	✓	✓	✓	✓	✓	✓	✓	✓	✓			
6 Pt100 resistance thermometers – 2-wire input (12 terminals)	**J**	–	–	–	–	–	–	–	–	✓	✓	✓	✓	✓	✓			
1 Pt1000 resistance thermometers (2 terminals) [3]	**K**	–	✓	✓	✓	✓	✓	✓	✓	✓	✓	✓	✓	✓	✓			
2 Pt1000 resistance thermometers (4 terminals) [3]	**L**	–	✓	✓	✓	✓	✓	✓	✓	✓	✓	✓	✓	✓	✓			
1 Pt100 resistance thermometer – 2-wire input (2 terminals)	**P**	–	–	–	–	✓	✓	✓	✓	✓	✓	✓	✓	✓	✓			
3 Pt100 resistance thermometers – 3-wire input (9 terminals)	**Q**	–	–	–	–	✓	✓	✓	✓	✓	✓	✓	✓	✓	✓			
6 Pt100 resistance thermometers – 3-wire input (18 terminals)	**R**	–	–	–	–	✓	✓	✓	✓	✓	✓	✓	✓	✓	✓			
3 NTC thermistors – for tripping (6 terminals)	**Z**	**Q2A**	✓	✓	✓	✓	✓	✓	✓	–	–	–	–	–	–			
3 bimetal sensors (NC contacts) – for tripping (2 terminals) [2]	**Z**	**Q3A**	✓	✓	✓	✓	✓	✓	✓	✓	✓	✓	✓	✓	✓			
6 bimetal sensors (NC contacts) for alarm and tripping (4 terminals) [2]	**Z**	**Q9A**	–	–	–	✓	✓	✓	✓	✓	✓	✓	✓	✓	✓			

□ Standard version
✓ With additional charge
– Not possible

Note:

Options are available specifically for bearing protection – for order codes and descriptions, see from page 2/109.

[1] For the Performance Line, motor protection by means of PTC thermistors with 3 built-in temperature sensors for tripping (motor protection code letter B) is already included in the basic price. For the Performance Line, the option "without motor protection" (motor protection code letter A) is not possible.

[2] Evaluation with appropriate tripping unit (see Catalog IC 10) is recommended.

[3] Not UL certified. Not in combination with option **D31**.

© Siemens AG 2018

Terminal box position · Aluminum series 1LE10

Selection and ordering data

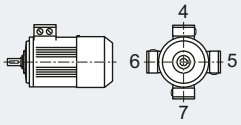

Terminal box position	Article No. supplement		Frame size										Motor version		
	Terminal box position code 16th position of the Article No.	Additional identification code with order code and plain text if required	63	71	80	90	100	112	132	160	180	200			
							1LE1004						IEC	IE4	①
					1LE1003									IE3	②
			1LE1001											IE2	③
			1LE1002											IE1	④
					1LE1043								APAC Line	IE3	⑤
					1LE1041									IE2	⑥
					1LE1023								Eagle Line	NPE (NEMA)	⑦
						1LE1021								NEE (NEMA)	⑧
							1LE1011						Pole-changing		⑨
1LE10 . . - . . . . . - . . . ■		Order code					1LE1012								⑩
Terminal box position															
Terminal box top [1]	**4**	**–**	□	□	□	□	□	□	□	□	□	□			
Terminal box right-hand side [2]	**5**	**–**	–	–	✓	✓	✓	✓	✓	✓	✓	✓			
Terminal box left-hand side [2]	**6**	**–**	–	–	✓	✓	✓	✓	✓	✓	✓	✓			
Terminal box at bottom [2] [3]	**7**	**–**	–	–	–	–	✓	✓	✓	✓	–	–			

□ Standard version
✓ With additional charge
– Not possible

[1] For types of construction with feet up to and including frame size 160, cast feet are standard. Screwed-on feet are available with order code **H01**. Frame sizes 180 and 200 are fitted as standard with screwed-on feet.

[2] For types of construction with feet, screwed-on feet are standard.

[3] Not generally possible for motors with feet.

© Siemens AG 2018

Selection and ordering data

Terminal box position	Article No. supplement		Frame size													Motor version		
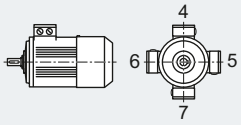	Terminal box position code 16th position of the Article No.	Additional identification code with order code and plain text if required	71	80	90	100	112	132	160	180	200	225	250	280	315			
						1LE1504 Basic Line										IEC	IE4	①
						1LE1604 Performance Line												②
			1LE1503 Basic Line														IE3	③
						1LE1603 Performance Line												④
			1LE1501 Basic Line														IE2	⑤
						1LE1601 Performance Line												⑥
						1LE1502 Basic Line											IE1	⑦
				1LE1543 Basic Line												APAC Line	IE3	⑧
						1LE1643 Performance Line												⑨
										1LE1541 Basic Line							IE2	⑩
			1LE1523 Basic Line													Eagle Line	NPE (NEMA)	⑪
						1LE1623 Performance Line												⑫
1LE1 . . . - . . . . . - . . . ■		Order code				1LE1521 Basic Line											NEE (NEMA)	⑬

Terminal box position																
Terminal box top [1]	4	–	□	□	□	□	□	□	□	□	□	□	□	□	□	
Terminal box right-hand side [2]	5	–	–	✓	✓	✓	✓	✓	✓	✓	✓	✓	✓	✓	✓	
Terminal box left-hand side [2]	6	–	–	✓	✓	✓	✓	✓	✓	✓	✓	✓	✓	✓	✓	
Terminal box bottom [3]	7	–	–	–	–	✓	✓	✓	✓	–	–	–	–	–	–	

□ Standard version
✓ With additional charge
– Not possible

[1] For types of construction with feet and flange-mounted with feet, cast feet are standard. Screwed-on feet are available with order code **H01**.

[2] For types of construction with feet and flange-mounted with feet, screwed-on feet are standard. Except for frame sizes 225, 250, 280 and 315: in which case for types of construction with feet and flange-mounted with feet, cast feet are standard. Screwed-on feet are available with order code **H01**.

[3] Not generally possible for motors with feet.

© Siemens AG 2018

Selection and ordering data

Special versions	Additional identification code **-Z** with order code and plain text if required		Frame size 63	71	80	90	100	112	132	160	180	200	Motor version		
							1LE1004						IEC	IE4	①
					1LE1003									IE3	②
			1LE1001											IE2	③
			1LE1002											IE1	④
					1LE1043								APAC Line	IE3	⑤
					1LE1041									IE2	⑥
					1LE1023								Eagle Line	NPE (NEMA)	⑦
						1LE1021								NEE (NEMA)	⑧
							1LE1011						Pole-changing		⑨
1LE10 . . - . . . . . - . . . . -Z	Order code						1LE1012								⑩
Motor protection															
1 or 3 PTC thermistors – for tripping (2 terminals)	**Q11**	*New!*	✓	✓	✓	✓	✓	✓	✓	✓	✓	✓			
2 or 6 PTC thermistors – for alarm and tripping (4 terminals)	**Q12**	*New!*	✓	✓	✓	✓	✓	✓	✓	✓	✓	✓			
1 KTY84-130 temperature sensor (2 terminals)	**Q23**	*New!*	✓	✓	✓	✓	✓	✓	✓	✓	✓	✓			
2 KTY84-130 temperature sensors (4 terminals)	**Q25**	*New!*	✓	✓	✓	✓	✓	✓	✓	✓	✓	✓			
3 bimetal sensors (NC contacts) for tripping (2 terminals)	**Q31**	*New!*	–	–	✓	✓	✓	✓	✓	✓	✓	✓			
6 bimetal sensors (NC contacts) for alarm and tripping (4 terminals)	**Q32**	*New!*	–	–	✓	✓	✓	✓	✓	✓	✓	✓			
3 bimetal sensors (NC contacts) for tripping (6 terminals)	**Q33**	*New!*	–	–	–	–	–	–	–	–	✓	✓			
6 bimetal sensors (NC contacts) for alarm and tripping (12 terminals)	**Q34**	*New!*	–	–	–	–	–	–	–	–	✓	✓			
1 Pt1000 resistance thermometer (2 terminals) [40]	**Q35**		✓	✓	✓	✓	✓	✓	✓	✓	✓	✓			
2 Pt1000 resistance thermometers (4 terminals) [40]	**Q36**		✓	✓	✓	✓	✓	✓	✓	✓	✓	✓			
3 Pt100 resistance thermometers – 2-wire input (6 terminals)	**Q60**	*New!*	–	–	–	–	✓	✓	✓	✓	✓	✓			
6 Pt100 resistance thermometers – 2-wire input (12 terminals)	**Q61**	*New!*	–	–	–	–	✓	✓	✓	✓	✓	✓			
1 Pt100 resistance thermometer – 2-wire input (2 terminals)	**Q62**	*New!*	–	–	–	–	✓	✓	✓	✓	✓	✓			
3 Pt100 resistance thermometers – 3-wire input (9 terminals)	**Q63**	*New!*	–	–	–	–	✓	✓	✓	✓	✓	✓			
6 Pt100 resistance thermometers – 3-wire input (18 terminals)	**Q64**	*New!*	–	–	–	–	✓	✓	✓	✓	✓	–			
2 Pt100 screw-in thermometers in basic configuration for bearings (2 terminals)	**Q72**	*New!*	–	–	–	–	O. R.	O. R.	O. R.	O. R.	✓	✓			
2 Pt100 screw-in thermometers in 3-wire input for bearing (6 terminals)	**Q78**	*New!*	–	–	–	–	O. R.	O. R.	O. R.	O. R.	✓	✓			
2 Pt100 double screw-in thermometers in 3-wire input for bearing (12 terminals)	**Q79**	*New!*	–	–	–	–	O. R.	O. R.	O. R.	O. R.	✓	✓			
Motor connection and terminal box															
External grounding	**H04**		✓	✓	✓	✓	✓	✓	✓	✓	✓	✓			
Terminal box on NDE [3]	**H08**		✓	✓	✓	✓	✓	✓	✓	✓	✓	✓			
Rotation of the terminal box through 90°, entry from DE [1]	**R10**		○	○	○	○	○	○	○	○	✓	✓			
Rotation of the terminal box through 90°, entry from NDE	**R11**		○	○	○	○	○	○	○	○	✓	✓			
Rotation of the terminal box by 180°	**R12**		○	○	○	○	○	○	○	○	✓	✓			
Terminal box in position 0°; connection from right [41]	**R13**	*New!*	○	○	○	○	○	○	○	–	–	–			
One metal cable gland	**R15**		✓	✓	✓	✓	✓	✓	✓	✓	✓	✓			
Metal cable gland, maximum configuration	**R18**		–	–	–	–	–	–	–	–	✓	✓			
3 cables protruding, 0.5 m long [4][5]	**R20**		✓	✓	✓	✓	✓	✓	✓	✓	–	–	Not for:	⑨, ⑩	
3 cables protruding, 1.5 m long [4][5]	**R21**		✓	✓	✓	✓	✓	✓	✓	✓	O. R.	O. R.	Not for:	⑨, ⑩	
6 cables protruding, 0.5 m long [4]	**R22**		✓	✓	✓	✓	✓	✓	✓	✓	O. R.	O. R.			
6 cables protruding, 1.5 m long [4]	**R23**		✓	✓	✓	✓	✓	✓	✓	✓	O. R.	O. R.			

For legends and footnotes, see page 2/108.

© Siemens AG 2018

Special versions	Additional identification code **-Z** with order code and plain text if required	Frame size 63	71	80	90	100	112	132	160	180	200	Motor version		
						1LE1004						IEC	IE4	①
				1LE1003									IE3	②
		1LE1001											IE2	③
		1LE1002											IE1	④
				1LE1043								APAC Line	IE3	⑤
				1LE1041									IE2	⑥
				1LE1023								Eagle Line	NPE (NEMA)	⑦
					1LE1021								NEE (NEMA)	⑧
						1LE1011						Pole-changing		⑨
1LE10 . . - . . . . . - . . . . -Z	Order code					1LE1012								⑩
Motor connection and terminal box (continued)														
6 cables protruding, 3 m long [4]	**R24**	✓	✓	✓	✓	✓	✓	✓	✓	O. R.	O. R.			
Reduction piece for M cable gland in accordance with British Standard, mounted on both cable entries [2]	**R30**	–	–	–	–	✓	✓	✓	✓	–	–			
Larger terminal box	**R50**	✓	✓	✓	✓	✓	✓	✓	✓	✓	✓	Not for:	⑦, ⑧ < frame size 100	
	–	–	–	□	□	□	□	□	□	□	□	Only for:	⑦, ⑧ < frame size 100	
Auxiliary terminal box, aluminum	**R60**	–	–	–	–	–	–	–	–	✓	✓			
Motor connector Han-Drive 10e for 230 VΔ/400 VY [30]	**R70**	✓	✓	✓	✓	✓	✓	✓	–	–	–			
Motor connector Han-Drive 10e EMC for 230 VΔ/400 VY [30]	**R71**	✓	✓	✓	✓	✓	✓	✓	–	–	–			
Small motor connector CQ12 with EMC	**R72**	–	–	✓	✓	–	–	–	–	–	–			
Small motor connector CQ12 without EMC	**R73**	–	–	✓	✓	–	–	–	–	–	–			
Windings and insulation														
Temperature class 155 (F), utilized according to 155 (F), with service factor	**N01**	–	–	–	–	✓	✓	✓	✓	✓	✓			
Temperature class 155 (F), utilized acc. to 155 (F), with increased power	**N02**	–	–	–	–	✓	✓	✓	✓	✓	✓			
Temperature class 155 (F), utilized acc. to 155 (F), with increased coolant temperature	**N03**	✓	✓	✓	✓	✓	✓	✓	✓	✓	✓			
Temperature class 155 (F), utilized acc. to 130 (B), coolant temperature 45 °C, derating approx. 4 %	**N05**	✓	✓	✓	✓	✓	✓	✓	✓	✓	✓			
Temperature class 155 (F), utilized acc. to 130 (B), coolant temperature 50 °C, derating approx. 8 %	**N06**	✓	✓	✓	✓	✓	✓	✓	✓	✓	✓			
Temperature class 155 (F), utilized acc. to 130 (B), coolant temperature 55 °C, derating approx. 13 %	**N07**	✓	✓	✓	✓	✓	✓	✓	✓	✓	✓			
Temperature class 155 (F), utilized acc. to 130 (B), coolant temperature 60 °C, derating approx. 18 %	**N08**	✓	✓	✓	✓	✓	✓	✓	✓	✓	✓			
Temperature class 180 (H) [31]	**N10**	✓	✓	✓	✓	–	–	–	–	–	–	Not for:	①, ⑤, ⑥, ⑧, ⑩	
Temperature class 180 (H) at rated power and max. CT 60 °C [6] [31]	**N11**	✓	✓	✓	✓	✓	✓	✓	✓	✓	✓	Not for:	①	
Increased air humidity/temperature with 30 to 60 g water per m^3 of air	**N30**	✓	✓	✓	✓	✓	✓	✓	✓	✓	✓			
Increased air humidity/temperature with 60 to 100 g water per m^3 of air	**N31**	✓	✓	✓	✓	✓	✓	✓	✓	✓	✓			
Temperature class 155 (F), utilized acc. to 130 (B), with higher coolant temperature and/or installation altitude	**Y50** • and spec. power, CT .. °C or IA .... m above sea level	✓	✓	✓	✓	✓	✓	✓	✓	✓	✓			
Temperature class 155 (F), utilized according to 155 (F), other require-ments	**Y52** • and spec. power, CT .. °C or IA .... m above sea level	✓	✓	✓	✓	✓	✓	✓	✓	✓	✓			
Temperature class 180 (H), utilized according to 155 (F)	**Y75** • and spec. power, CT .. °C or IA .... m above sea level	–	–	–	–	O. R.	O. R.	O. R.	O. R.	–	–	Not for:	①	

For legends and footnotes, see page 2/108.

© Siemens AG 2018

Article No. supplements and special versions
SIMOTICS GP 1LE1 standard motors

Options · Aluminum series 1LE10

Special versions	Additional identification code **-Z** with order code and plain text if required		Frame size 63	71	80	90	100	112	132	160	180	200	Motor version		
							1LE1004						IEC	IE4	①
					1LE1003									IE3	②
			1LE1001											IE2	③
			1LE1002											IE1	④
					1LE1043								APAC Line	IE3	⑤
					1LE1041									IE2	⑥
					1LE1023								Eagle Line	NPE (NEMA)	⑦
						1LE1021								NEE (NEMA)	⑧
							1LE1011						Pole-changing		⑨
1LE10 . . - . . . . . - . . . . -Z	Order code						1LE1012								⑩
Colors and paint finish															
Standard paint finish C2 in RAL 7030 stone gray			□	□	□	□	□	□	□	□	□	□			
Unpainted (only cast-iron parts primed)	**S00**		○	○	○	○	○	○	○	○	○	○			
Unpainted, only primed	**S01**		✓	✓	✓	✓	✓	✓	✓	✓	✓	✓			
Special paint finish C3	**S02**		✓	✓	✓	✓	✓	✓	✓	✓	✓	✓			
Special paint finish sea air resistant C4	**S03**		✓	✓	✓	✓	✓	✓	✓	✓	✓	✓			
Internal coating	**S05**	*New!*	✓	✓	✓	✓	✓	✓	✓	✓	✓	✓			
Top coat polyurethane [34]	**S06**		✓	✓	✓	✓	✓	✓	✓	✓	✓	✓			
Paint finish in other standard RAL colors: RAL 1002, 1013, 1015, 1019, 2003, 2004, 3000, 3007, 5002, 5007, 5009, 5010, 5012, 5015, 5017, 5018, 5019, 6011, 6019, 6021, 7000, 7001, 7004, 7011, 7016, 7022, 7031, 7032, 7033, 7035, 9001, 9002, 9005 (see Catalog Section 1 "Introduction")	**Y53 •** and paint finish RAL....		✓	✓	✓	✓	✓	✓	✓	✓	✓	✓			
Paint finish in special RAL colors: For RAL colors, see "Special paint finish in special RAL colors" (see Catalog Section 1 "Introduction")	**Y56 •** and paint finish RAL....		✓	✓	✓	✓	✓	✓	✓	✓	✓	✓			
Modular technology – Basic versions [7]															
Mounting of holding brake (standard assignment) [8] [28]	**F01**		✓	✓	✓	✓	✓	✓	✓	✓	✓	✓			
Mounting of brake for higher switching frequency (operating brake)	**F02**		O. R.	O. R.	O. R.	O. R.	O. R.	O. R.	O. R.	O. R.	–	–			
Mounting of separately driven fan [29]	**F70**		✓	✓	✓	✓	✓	✓	✓	✓	✓	✓			
Mounting of 1XP8012-10 (HTL) rotary pulse encoder [9] [10]	**G01**		✓	✓	✓	✓	✓	✓	✓	✓	✓	✓			
Mounting of 1XP8012-20 (TTL) rotary pulse encoder [9] [10]	**G02**		✓	✓	✓	✓	✓	✓	✓	✓	✓	✓			
Mounting of Kübler Sendix 5020 HTL, 1024 I rotary pulse encoder	**G11**		–	–	✓	✓	✓	✓	✓	✓	✓	✓			
Mounting of Kübler Sendix 5020 TTL, 1024 I rotary pulse encoder	**G12**		–	–	✓	✓	✓	✓	✓	✓	✓	✓			
Modular technology – Additional versions															
Brake supply voltage 24 V DC	**F10**		✓	✓	✓	✓	✓	✓	✓	✓	✓	✓			
Brake supply voltage 230 V AC, 50/60 Hz	**F11**		✓	✓	✓	✓	○	○	○	○	○	○			
Brake supply voltage 400 V AC, 50/60 Hz	**F12**		✓	✓	✓	✓	✓	✓	✓	✓	✓	✓			
Mechanical manual brake release with lever (no locking)	**F50**		✓	✓	✓	✓	✓	✓	✓	✓	✓	✓			
Special technology [7]															
Mounting of LL 861 900 220 rotary pulse encoder [9]	**G04**		–	–	–	–	✓	✓	✓	✓	✓	✓			
Mounting of HOG 9 DN 1024 I rotary pulse encoder [9]	**G05**		–	–	–	–	✓	✓	✓	✓	✓	✓			
Mounting of HOG 10 D 1024 I rotary pulse encoder [9]	**G06**		–	–	–	–	✓	✓	✓	✓	✓	✓			
Mechanical version and degrees of protection															
Low-noise version for 2-pole motors with clockwise direction of rotation	**F77**		–	–	–	–	–	–	✓	✓	✓	✓			
Low-noise version for 2-pole motors with counterclockwise direction of rotation	**F78**		–	–	–	–	–	–	✓	✓	✓	✓			
Prepared for mountings, centering hole only [10]	**G40**		–	–	✓	✓	✓	✓	✓	✓	□	□			
Prepared for mountings with D12 shaft [15]	**G41**		✓	✓	✓	✓	✓	✓	✓	✓	✓	✓			
Prepared for mountings with D16 shaft [15]	**G42**		–	–	O. R.	O. R.	✓	✓	✓	✓	✓	✓			
Mechanical protection for encoder	**G43**		O. R.	O. R.	✓	✓	✓	✓	✓	✓	✓	✓			

For legends and footnotes, see page 2/108.

© Siemens AG 2018

Special versions	Additional identification code **-Z** with order code and plain text if required		Frame size 63	71	80	90	100	112	132	160	180	200	Motor version		
							1LE1004						IEC	IE4	①
					1LE1003									IE3	②
			1LE1001											IE2	③
			1LE1002											IE1	④
					1LE1043								APAC Line	IE3	⑤
					1LE1041									IE2	⑥
					1LE1023								Eagle Line	NPE (NEMA)	⑦
						1LE1021								NEE (NEMA)	⑧
							1LE1011						Pole-changing		⑨
1LE10 . . - . . . . . - . . . . -Z	Order code						1LE1012								⑩
Mechanical design and degrees of protection (continued)															
Protective cover [9) 11)]	**H00**		✓	✓	✓	✓	✓	✓	✓	✓	✓	✓			
Screwed-on (instead of cast) feet	**H01**		–	–	✓	✓	✓	✓	✓	✓	□	□			
Vibration-proof version; vibration resistance to Class 3M4 according to IEC 60721-3-3:1994 [39)]	**H02**		✓	✓	✓	✓	✓	✓	✓	✓	✓	✓			
Condensation drainage holes [14)]	**H03**		✓	✓	✓	✓	✓	✓	✓	✓	✓	✓			
Rust-resistant screws (externally)	**H07**		✓	✓	✓	✓	✓	✓	✓	✓	✓	✓			
Housing with screw mounting [32)]	**H10**		–	–	✓	✓	–	–	–	–	✓	✓	Only for:	②, ③, ⑤, ⑥ (frame sizes 80, 90), ⑦, ⑧	
Degree of protection IP65 [13)]	**H20**		✓	✓	✓	✓	✓	✓	✓	✓	✓	✓			
Degree of protection IP56 [12)]	**H22**		✓	✓	✓	✓	✓	✓	✓	✓	✓	✓			
Drive-end seal for flange-mounting motors, oil-tight to 0.1 bar [16)]	**H23**		✓	✓	✓	✓	✓	✓	✓	✓	✓	✓			
Coolant temperature and installation altitude															
Coolant temperature –40 to +40 °C [16) 28)]	**D03**		✓	✓	✓	✓	✓	✓	✓	✓	✓	✓			
Coolant temperature –30 to +40 °C [16) 28)]	**D04**		✓	✓	✓	✓	✓	✓	✓	✓	✓	✓			
Versions in accordance with standards and specifications															
VIK version	**C02**		–	–	✓	✓	✓	✓	✓	✓	–	–	Only for:	②, ③	
CCC China Compulsory Certification [17)]	**D01**	*New!*	–	–	✓	✓	–	–	–	–	–	–			
Motor without CE marking for export outside EEA (see EU Directive 640/2009)	**D22**		–	○	○	○	○	○	○	○	○	○	Only for:	③, ④	
Electrical according to NEMA MG1-12 [18)]	**D30**		–	–	✓	✓	✓	✓	✓	✓	✓	✓	Not for:	⑦, ⑧	
	–		–	–	□	□	□	□	□	□	□	□	Only for:	⑦, ⑧	
Design according to UL with "Recognition Mark" [19)]	**D31**		–	–	✓	✓	✓	✓	✓	✓	✓	✓	Not for:	⑦, ⑧	
	–		–	–	□	□	□	□	□	□	□	□	Only for:	⑦, ⑧	
KEMCO Korea Energy Efficiency Label	**D33**		–	–	○	○	○	○	○	○	○	○	Only for:	⑤, ⑥	
China Energy Efficiency Label [38)]	**D34**		–	–	○	○	○	○	○	○	○	○	Not for:	④, ⑨, ⑩	
Canadian regulations (CSA) [33) 37)]	**D40**		✓	✓	✓	✓	✓	✓	✓	✓	✓	✓	Not for:	④, ⑦, ⑧, ⑨, ⑩	
	–		–	–	□	□	□	□	□	□	□	□	Only for:	⑦, ⑧	
TR CU product safety certificate EAC for Eurasian customs union [35)]	**D47**		–	–	✓	✓	✓	✓	✓	✓	✓	✓			
Version suitable for railways IC 411, EN IEC 60349, without EN 45545, with external fan and fan cover in plastic	**L90**	*New!*	–	–	✓	✓	✓	✓	✓	✓	✓	✓			
Version suitable for railways IC 411, EN IEC 60349, with EN 45545, with external fan and fan cover in metal	**L91**	*New!*	✓	✓	✓	✓	✓	✓	✓	✓	✓	✓			
Version suitable for railways IC 418, EN IEC 60349, without EN 45545, without external fan and fan cover	**L92**	*New!*	✓	✓	✓	✓	✓	✓	✓	✓	✓	✓			
Bearings and lubrication															
Regreasing device with M10 × 1 grease nipple according to DIN 71412-A	**L19**		–	–	–	–	–	–	–	–	✓	✓			
Located bearing DE	**L20**		✓	✓	✓	✓	✓	✓	✓	✓	✓	✓			
Located bearing NDE	**L21**		✓	✓	✓	✓	✓	✓	✓	□	□	□			
Bearing design for increased cantilever forces [36)]	**L22**		–	–	✓	✓	✓	✓	✓	✓	✓	✓			
Regreasing device [20)]	**L23**		–	–	–	–	✓	✓	✓	✓	✓	✓			
Bearings reinforced at both ends for DE and NDE, bearing size 63	**L25**		–	–	✓	✓	✓	✓	✓	✓	✓	✓			
Measuring nipple for SPM shock pulse measurement for bearing inspection [20)]	**Q01**		–	–	–	–	✓	✓	✓	✓	✓	✓			

For legends and footnotes, see page 2/108.

© Siemens AG 2018

Article No. supplements and special versions
SIMOTICS GP 1LE1 standard motors

Options · Aluminum series 1LE10

Special versions	Additional identification code **-Z** with order code and plain text if required	Frame size 63	71	80	90	100	112	132	160	180	200	Motor version
						1LE1004						IEC IE4 ①
				1LE1003								IEC IE3 ②
		1LE1001										IEC IE2 ③
		1LE1002										IEC IE1 ④
				1LE1043								APAC Line IE3 ⑤
				1LE1041								APAC Line IE2 ⑥
				1LE1023								Eagle Line NPE (NEMA) ⑦
					1LE1021							Eagle Line NEE (NEMA) ⑧
						1LE1011						Pole-changing ⑨
1LE10 . . - . . . . . - . . . . -Z	Order code					1LE1012						⑩
Balance and vibration severity												
Vibration severity grade A		□	□	□	□	□	□	□	□	□	□	
Vibration severity grade B	**L00**	✓	✓	✓	✓	✓	✓	✓	✓	✓	✓	
Half-key balancing (standard)		□	□	□	□	□	□	□	□	□	□	
Balancing without feather key	**L01**	✓	✓	✓	✓	✓	✓	✓	✓	✓	✓	
Full-key balancing	**L02**	–	–	✓	✓	✓	✓	✓	✓	✓	✓	
Shaft and rotor												
Shaft extension with standard dimensions, without feather keyway	**L04**	–	–	–	–	✓	✓	✓	✓	✓	✓	
Standard, cylindrical shaft extension (second shaft extension) NDE acc. to EN 50347	**L05**	✓	✓	✓	✓	✓	✓	✓	✓	✓	✓	
Standard shaft made of stainless steel (e.g. 1.4021)	**L06**	✓	✓	✓	✓	✓	✓	✓	✓	✓	✓	
Concentricity of shaft extension in accordance with DIN 42955 Tolerance R	**L07**	✓	✓	✓	✓	✓	✓	✓	✓	✓	✓	
Concentricity of shaft extension, coaxiality, and linear movement in accordance with DIN 42955 Tolerance R for flange-mounted motors	**L08**	✓	✓	✓	✓	✓	✓	✓	✓	✓	✓	
Non-standard cylindrical shaft extension, DE [21]	**Y58** • and customer specifications	✓	✓	✓	✓	✓	✓	✓	✓	✓	✓	
Non-standard cylindrical shaft extension, NDE [21]	**Y59** • and customer specifications	✓	✓	✓	✓	✓	✓	✓	✓	✓	✓	
Heating and ventilation												
Sheet metal fan cover	**F74**	–	–	✓	✓	✓	✓	✓	✓	✓	✓	
Fan cover for textile industry [22]	**F75**	✓	✓	✓	✓	✓	✓	✓	✓	✓	✓	
Metal external fan [23] [29]	**F76**	✓	✓	✓	✓	✓	✓	✓	✓	✓	✓	
Without external fan and without fan cover	**F90**	✓	✓	✓	✓	✓	✓	✓	✓	✓	✓	Not for: ⑨, ⑩
Anti-condensation heating for 230 V (2 terminals)	**Q02**	✓	✓	✓	✓	✓	✓	✓	✓	✓	✓	
Anti-condensation heating for 115 V (2 terminals)	**Q03**	✓	✓	✓	✓	✓	✓	✓	✓	✓	✓	
Rating plate and additional rating plates												
Additional rating plate for voltage tolerance [24]	**B07**	✓	✓	✓	✓	✓	✓	✓	✓	✓	✓	Not for: ⑨, ⑩, 8-pole motors
Second rating plate, loose [25]	**M10**	✓	✓	✓	✓	✓	✓	✓	✓	✓	✓	
Rating plate, stainless steel	**M11**	✓	✓	✓	✓	✓	✓	✓	✓	✓	✓	
Additional rating plate with deviating rating plate data	**Y80** • and customer specifications	✓	✓	✓	✓	✓	✓	✓	✓	✓	✓	
Additional rating plate with customer specifications	**Y82** • and customer specifications	✓	✓	✓	✓	✓	✓	✓	✓	✓	✓	
Additional information on rating plate and on package label (max. 20 characters)	**Y84** • and customer specifications	✓	✓	✓	✓	✓	✓	✓	✓	✓	✓	
Adhesive label, supplied loose (printed with: Article No., Serial No.: 2 lines of text)	**Y85** • and customer specifications	–	–	–	–	✓	✓	✓	✓	✓	✓	

For legends and footnotes, see page 2/108.

© Siemens AG 2018

Special versions	Additional identification code **-Z** with order code and plain text if required		Frame size 63	71	80	90	100	112	132	160	180	200	Motor version		
							1LE1004						IEC	IE4	①
					1LE1003									IE3	②
			1LE1001											IE2	③
			1LE1002											IE1	④
					1LE1043								APAC Line	IE3	⑤
					1LE1041									IE2	⑥
					1LE1023								Eagle Line	NPE (NEMA)	⑦
						1LE1021								NEE (NEMA)	⑧
							1LE1011						Pole-changing		⑨
1LE10 . . - . . . . . - . . . . -Z	Order code						1LE1012								⑩
Packaging, safety notes, documentation and test certificates															
Printed German/English Operating Instructions (compact) enclosed [27]			□	□	□	□	□	□	□	□	□	□			
Printed German/English Operating Instructions (compact) enclosed in each wire-lattice pallet [27]	**B01**		○	○	○	○	○	○	○	○	○	○			
Acceptance test certificate 3.1 according to EN 10204 [26]	**B02**		✓	✓	✓	✓	✓	✓	✓	✓	✓	✓			
Printed German/English Operating Instructions enclosed	**B04**		–	–	✓	✓	✓	✓	✓	✓	✓	✓			
Document - Electrical data sheet	**B60**		–	–	✓	✓	✓	✓	✓	✓	✓	✓			
Document - Order dimensional drawing	**B61**		–	–	✓	✓	✓	✓	✓	✓	✓	✓			
Type test with heat run for horizontal motors, with acceptance	**B83**		✓	✓	✓	✓	✓	✓	✓	✓	✓	✓			
"Basic" documentation package	**B90**	*New!*	–	–	✓	✓	✓	✓	✓	✓	✓	✓			
"Advanced" documentation package	**B91**	*New!*	–	–	✓	✓	✓	✓	✓	✓	✓	✓			
"Projects" documentation package	**B92**	*New!*	–	–	✓	✓	✓	✓	✓	✓	✓	✓			
Wire-lattice pallet packaging	**B99**		✓	✓	○	○	○	○	○	○	○	○			
Connected in star for dispatch	**M01**		–	–	–	–	✓	✓	✓	✓	✓	✓			
Connected in delta for dispatch	**M02**		–	–	–	–	✓	✓	✓	✓	✓	✓			

For legends and footnotes, see page 2/108.

© Siemens AG 2018

Options · Aluminum series 1LE10

◘	Standard version
○	Without additional charge
•	This order code only determines the price of the version – Additional plain text is required.
✓	With additional charge
O. R.	Possible on request
Av. soon	Available soon
–	Not possible

1) With IM B5 flange, only possible in combination with **H08**.

2) Not possible in combination with order code **R15** "One metal cable gland".

3) With **H08**, feet dimensions C and CA differ from EN 50347! Further information is available in the DT Configurator (see Appendix, "Tools and engineering").

4) In conjunction with motor protection (15th position of the Article No.) or anti-condensation heating option, please inquire before ordering.

5) Not possible in combination with voltage code **22** or **34**.

6) Cannot be used for motors in UL version (order code **D31**). The grease lifetime specified in Catalog Section 1 "Introduction" refers to CT 40 °C. If the coolant temperature is increased by 10 K, the grease lifetime and regreasing interval are halved.

7) A second shaft extension is not possible. Please inquire for mounted brakes.

8) For order codes **F10**, **F11**, and **F12**, the brake supply voltage must be specified or ordered.

9) All encoders are supplied with a protective cover as standard. The protective cover is omitted at the factory when a rotary pulse encoder is combined with a separately driven fan, because in this case the rotary pulse encoder is installed under the fan cover. In combination with a separately driven fan (order code **F70**) the 1XP8032-10 rotary pulse encoder is used instead of 1XP8012-10 or 1XP8032-20 is used instead of 1XP8012-20.

10) As standard, motors that are prepared for additional mountings (order codes **G40**, **G41**, **G42**) are shipped without protective cover. If a protective cover is requested as a cover or mechanical protection for mountings provided by the customer, this can be ordered with order code **G43**. Not possible in combination with order code **L00** vibration severity grade B. In combination with a separately driven fan (order code **F70**) the 1XP8032-10 rotary pulse encoder is used instead of 1XP8012-10 or 1XP8032-20 is used instead of 1XP8012-20.

11) Order code **H00** provides mechanical protection for encoders.

12) Not possible in combination with 2LM8 brake – order code **F01**.

13) Not possible in combination with HOG 9 DN 1024 I rotary pulse encoder (order code **G05**) and/or brake 2LM8 (order code **F01**).

14) Supplied with the condensation drainage holes sealed at the drive end DE and non-drive end NDE (IP55, IP56, IP65). If the condensation drainage holes are required for motors of the IM B6, IM B7, or IM B8 type of construction (feet on side or top), the motors must be ordered in the respective type of construction and with order code **H03**, so that the condensation drainage holes will be placed in the correct position.

15) As standard, motors that are prepared for additional mountings (order codes **G40**, **G41**, **G42**) are shipped without protective cover. If a protective cover is requested as a cover or mechanical protection for mountings provided by the customer, this can be ordered with order code **G43**. Not possible in combination with order code **L00** vibration severity grade B.

16) In connection with mountings, the respective technical specifications must be observed, please inquire before ordering.

17) CCC mandatory certification, see Chapter 1 Page 1/27.

18) Possible up to 600 V max. The rated voltage is indicated on the rating plate without voltage range. Order codes **D30** and **D31** do not authorize importing into USA and Mexico. The North America export versions Eagle Line 1LE1021 NEMA Energy Efficient and 1LE1023 NEMA Premium Efficient are available for this purpose.

19) In connection with mountings, the respective technical specifications must be observed, please inquire before ordering.

20) Not possible when brake is mounted.

21) When motors are ordered that have a longer or shorter shaft extension than normal, the required position and length of the feather keyway must be specified in a sketch. It must be ensured that only feather keys in accordance with EN 50347, Form A are used. The feather keyway is positioned centrally on the shaft extension. The length is defined by the manufacturer in accordance with the appropriate standard. Not valid for: Conical shafts, non-standard threaded journals, non-standard shaft tolerances, friction welded journals, extremely "thin" shafts, special geometry dimensions (e.g. square journals), hollow shafts. Valid for non-standard shaft extensions DE or NDE. The feather key is always supplied. For order codes **Y58**, **Y59** and **L05** the following applies:
– Dimensions D and DA ≤ ball bearing inner diameter (see dimension tables for "Dimensions")
– Dimensions E and EA ≤ 2 × length E (standard) of the shaft extension.

22) The special requirements of the textile industry regarding the sheet metal cover open up the possibility that a finger may be inserted between the cover and housing. The customer must implement appropriate measures to ensure that the installed system is "finger-safe".

23) Converter operation is permitted for 1LE1 motors with metal external fans. The metal external fan is not possible in combination with the low-noise version – order code **F77** or **F78**.

24) Can be ordered for 230 VΔ/400 VY or 400 VΔ/690 VY (voltage code "**22**" or "**34**"). Not possible in combination with order code **D34**.

25) As adhesive label for frame sizes 80 and 90.

26) The delivery time for the factory test certificate may differ from the delivery time for the motor and it will be dispatched by email.

27) The Operating Instructions (compact) are available in PDF format for all official EU languages at http://support.automation.siemens.com/WW/view/en/40761976.

28) Not possible in combination with order codes **N05**, **N06**, **N07**, **N08**, and **N11**.

29) Order codes **F70** and **F76** cannot be combined.

30) When ordering with order code **R70** and **R71**, order code **R50** is included.

31) Not possible for 2-pole and 4-pole motors with increased power (11th position of the Article No.: 6) in frame sizes 80 and 90.

32) Possible with frame sizes 180 and 200 with screw-mounted fan cover.

33) For frame sizes 180 and 200, constructed with metric entry thread.

34) Order code **S06** cannot be combined with order code **S00** and **S01**. It can be combined with **Y53** and **Y56** on request.

35) Please note the additional use of order code **D22** "Motor without CE marking for export outside EEA (see EU Directive 640/2009)".

36) A minimum cantilever force F_{min} of 0.5 · F_{max} is required for NU bearings (cylindrical roller bearings) in contrast to ball bearings. Cylindrical roller bearings are not suitable for coupling output or for brief periods of no-load operation without cantilever force.

37) The rated voltage is indicated on the rating plate without voltage range. Order code **D40** does not authorize importing into Canada. The North America export versions Eagle Line 1LE1021 NEMA Energy Efficient and 1LE1023 NEMA Premium Efficient are available for this purpose.

38) Not possible in combination with voltage code (12th or 13th position of the Article No.) 17, 18, 30, 31, 60, 61, 62, 63 and 90 with the additional order codes **M1A; M2A; M2B; M1B; M1C; M2C; M1D; M2D; M1E; M2E; M1F; M2F; M1G; M2G; M1H; M2H; 1K; M2K; M1J; M2J; M1L; M2L; M1M; M2M** and **M3A**.

39) Not possible in combination with order code **R50**.

40) Not UL certified. Not in combination with option **D31**.

41) Not possible in combination with order codes **R70**, **R71**, **R72**, and **R73**.

© Siemens AG 2018

Selection and ordering data

Special versions	Additional identification code **-Z** with order code and plain text if required	Frame size												Motor version		
		71	**80**	**90**	**100**	**112**	**132**	**160**	**180**	**200**	**225**	**250**	**280**	**315**			
					1LE1504 Basic Line										IEC	IE4	①
					1LE1604 Performance Line												②
		1LE1503 Basic Line														IE3	③
					1LE1603 Performance Line												④
		1LE1501 Basic Line														IE2	⑤
					1LE1601 Performance Line												⑥
					1LE1502 Basic Line											IE1	⑦
			1LE1543 Basic Line												APAC Line	IE3	⑧
					1LE1643 Performance Line												⑨
									1LE1541 Basic Line							IE2	⑩
		1LE1523 Basic Line													Eagle Line	NPE (NEMA)	⑪
					1LE1623 Performance Line												⑫
1LE1 . . . -. . . . . -. . . . -Z	Order code				**1LE1521 Basic Line**											NEE (NEMA)	⑬
Motor protection																	
1 or 3 PTC thermistors – for tripping (2 terminals)	**Q11**	–	–	–	✓	✓	✓	✓	✓	✓	✓	✓	✓	✓			
2 or 6 PTC thermistors – for alarm and tripping (4 terminals)	**Q12**	–	–	–	✓	✓	✓	✓	✓	✓	✓	✓	✓	✓			
1 KTY84-130 temperature sensor (2 terminals)	**Q23**	–	–	–	✓	✓	✓	✓	✓	✓	✓	✓	✓	✓			
2 KTY84-130 temperature sensors (4 terminals)	**Q25**	–	–	–	✓	✓	✓	✓	✓	✓	✓	✓	✓	✓			
3 bimetal sensors (NC contacts) for tripping (2 terminals)	**Q31**	–	–	–	✓	✓	✓	✓	✓	✓	✓	✓	✓	✓			
6 bimetal sensors (NC contacts) for alarm and tripping (4 terminals)	**Q32**	–	–	–	✓	✓	✓	✓	✓	✓	✓	✓	✓	✓			
3 bimetal sensors (NC contacts) for tripping (6 terminals)	**Q33**	–	–	–	✓	✓	✓	✓	✓	✓	✓	✓	✓	✓			
6 bimetal sensors (NC contacts) for alarm and tripping (12 terminals)	**Q34**	–	–	–	✓	✓	✓	✓	✓	✓	✓	✓	✓	✓			
1 Pt1000 resistance thermometer (2 terminals) [40]	**Q35**	–	–	–	✓	✓	✓	✓	✓	✓	✓	✓	✓	✓			
2 Pt1000 resistance thermometers (4 terminals) [40]	**Q36**	–	–	–	✓	✓	✓	✓	✓	✓	✓	✓	✓	✓			
3 Pt100 resistance thermometers – 2-wire input (6 terminals)	**Q60**	–	–	–	✓	✓	✓	✓	✓	✓	✓	✓	✓	✓			
6 Pt100 resistance thermometers – 2-wire input (12 terminals) [27]	**Q61**	–	–	–	✓	✓	✓	✓	✓	✓	✓	✓	✓	✓			
1 Pt100 resistance thermometer – 2-wire input (2 terminals)	**Q62**	–	–	–	✓	✓	✓	✓	✓	✓	✓	✓	✓	✓			
3 Pt100 resistance thermometers – 3-wire input (9 terminals) [30]	**Q63**	–	–	–	✓	✓	✓	✓	✓	✓	✓	✓	✓	✓			
6 Pt100 resistance thermometers – 3-wire input (18 terminals) [30]	**Q64**	–	–	–	✓	✓	✓	✓	✓	✓	✓	✓	✓	✓			
2 Pt100 screw-in thermometers in basic configuration for bearing (2 terminals) [2]	**Q72**	–	–	–	–	–	–	–	✓	✓	✓	✓	✓	✓			
2 Pt100 screw-in thermometers in 3-wire input for bearing (6 terminals)	**Q78**	–	–	–	–	–	–	–	✓	✓	✓	✓	✓	✓			
2 Pt100 double screw-in thermometers in 3-wire input for bearing (12 terminals)	**Q79**	–	–	–	–	–	–	–	✓	✓	✓	✓	✓	✓			
Motor connection and terminal box																	
External grounding	**H04**	✓	✓	✓	✓	✓	✓	✓	□	□	□	□	□	□			
Terminal box on NDE [27]	**H08**	✓	✓	✓	✓	✓	✓	✓	✓	✓	✓	✓	✓	✓			
Second external grounding	**H70**	–	–	–	✓	✓	✓	✓	✓	✓	✓	✓	✓	✓			
Rotation of the terminal box through 90°, entry from DE [41]	**R10**	○	○	○	○	○	○	○	✓	✓	✓	✓	✓	✓			
Rotation of the terminal box through 90°, entry from NDE	**R11**	○	○	○	○	○	○	○	✓	✓	✓	✓	✓	✓			

For legends and footnotes, see page 2/116.

© Siemens AG 2018

Options · Cast-iron series 1LE15 Basic Line, 1LE16 Performance Line

Special versions	Additional identification code -Z with order code and plain text if required	Frame size 71	80	90	100	112	132	160	180	200	225	250	280	315	Motor version		
					1LE1504 Basic Line										IEC	IE4	①
					1LE1604 Performance Line												②
		1LE1503 Basic Line														IE3	③
					1LE1603 Performance Line												④
		1LE1501 Basic Line														IE2	⑤
					1LE1601 Performance Line												⑥
					1LE1502 Basic Line											IE1	⑦
			1LE1543 Basic Line												APAC Line	IE3	⑧
					1LE1643 Performance Line												⑨
									1LE1541 Basic Line							IE2	⑩
		1LE1523 Basic Line													Eagle Line	NPE (NEMA)	⑪
					1LE1623 Performance Line												⑫
1LE1 . . . - . . . . . - . . . . -Z	Order code				1LE1521 Basic Line											NEE (NEMA)	⑬
Motor connection and terminal box (continued)																	
Rotation of the terminal box by 180°	**R12**	○	○	○	○	○	○	○	✓	✓	✓	✓	✓	✓			
One EMC cable gland	**R14**	✓	✓	✓	✓	✓	✓	✓	✓	✓	✓	✓	✓	✓			
One metal cable gland	**R15**	✓	✓	✓	✓	✓	✓	✓	✓	✓	✓	✓	✓	✓			
EMC cable gland, maximum configuration	**R16**	✓	✓	✓	✓	✓	✓	✓	✓	✓	✓	✓	✓	✓			
Stud terminal for cable connection, accessories pack (3 items)	**R17**	–	–	–	–	–	–	–	–	–	–	✓	✓	✓			
Metal cable gland, maximum configuration	**R18**	✓	✓	✓	✓	✓	✓	✓	✓	✓	✓	✓	✓	✓			
Saddle terminal for connection without cable lug, accessories pack	**R19**	–	–	–	–	–	–	–	–	–	–	✓	✓	✓			
3 cables protruding, 0.5 m long	**R20**	✓	✓	✓	✓	✓	✓	✓	✓	–	–	–	–	–			
3 cables protruding, 1.5 m long	**R21**	✓	✓	✓	✓	✓	✓	✓	O.R.	O.R.	O.R.	O.R.	O.R.	O.R.			
6 cables protruding, 0.5 m long	**R22**	✓	✓	✓	✓	✓	✓	✓	✓	–	–	–	–	–			
6 cables protruding, 1.5 m long	**R23**	✓	✓	✓	✓	✓	✓	✓	O.R.	O.R.	O.R.	O.R.	O.R.	O.R.			
6 cables protruding, 3 m long	**R24**	✓	✓	✓	✓	✓	✓	✓	O.R.	O.R.	O.R.	O.R.	O.R.	O.R.			
Reduction piece for M cable gland in accordance with British Standard, mounted on both cable entries	**R30**	–	–	–	✓	✓	✓	✓	–	–	–	–	–	–			
Larger terminal box	**R50**	✓	✓	✓	✓	✓	✓	✓	✓	✓	✓	✓	✓	✓			
Terminal box without cable entry opening	**R51**	–	–	–	○	○	○	○	○	○	○	○	○	○			
Drilled removable entry plate	**R52**	–	–	–	–	–	–	–	✓	✓	✓	✓	✓	✓			
Undrilled removable entry plate	**R53**	–	–	–	–	–	–	–	✓	✓	✓	✓	✓	✓			
Cast-iron auxiliary terminal box (small) 30) 37)	**R62**	–	–	–	–	–	–	✓	✓	✓	✓	✓	✓	✓			
					✓	✓	✓	–	–	–	–	–	–	–	Only for:	Motors with order code R50 possible	
Silicone-free version	**R74**	–	–	–	□	□	□	□	□	□	□	✓	✓	✓			
Non-standard threaded through hole (NPT or G thread)	**Y61** • and customer specifications	–	–	–	✓	✓	✓	✓	✓	✓	✓	✓	✓	✓			
Windings and insulation																	
Temperature class 155 (F), utilized according to 155 (F), with service factor	**N01**	✓	✓	✓	✓	✓	✓	✓	✓	✓	✓	✓	✓	✓			
Temperature class 155 (F), utilized acc. to 155 (F), with increased power	**N02**	✓	✓	✓	✓	✓	✓	✓	✓	✓	✓	✓	✓	✓			
Temperature class 155 (F), utilized acc. to 155 (F), with increased coolant temperature	**N03**	✓	✓	✓	✓	✓	✓	✓	✓	✓	✓	✓	✓	✓			
Temperature class 155 (F), utilized acc. to 130 (B), coolant temperature 45 °C, derating approx. 4 %	**N05**	✓	✓	✓	✓	✓	✓	✓	✓	✓	✓	✓	✓	✓			
Temperature class 155 (F), utilized acc. to 130 (B), coolant temperature 50 °C, derating approx. 8 %	**N06**	✓	✓	✓	✓	✓	✓	✓	✓	✓	✓	✓	✓	✓			
Temperature class 155 (F), utilized acc. to 130 (B), coolant temperature 55 °C, derating approx. 13 %	**N07**	✓	✓	✓	✓	✓	✓	✓	✓	✓	✓	✓	✓	✓			

For legends and footnotes, see page 2/116.

© Siemens AG 2018

Options · Cast-iron series 1LE15 Basic Line, 1LE16 Performance Line

Special versions	Additional identification code **-Z** with order code and plain text if required	Frame size 71	80	90	100	112	132	160	180	200	225	250	280	315	Motor version		
					1LE1504 Basic Line										IEC	IE4	①
					1LE1604 Performance Line												②
		1LE1503 Basic Line														IE3	③
					1LE1603 Performance Line												④
		1LE1501 Basic Line														IE2	⑤
					1LE1601 Performance Line												⑥
					1LE1502 Basic Line											IE1	⑦
			1LE1543 Basic Line												APAC Line	IE3	⑧
					1LE1643 Performance Line												⑨
									1LE1541 Basic Line							IE2	⑩
		1LE1523 Basic Line													Eagle Line	NPE (NEMA)	⑪
					1LE1623 Performance Line												⑫
1LE1 . . . - . . . . . - . . . . -Z	Order code				1LE1521 Basic Line											NEE (NEMA)	⑬
Windings and insulation (continued)																	
Temperature class 155 (F), utilized acc. to 130 (B), coolant temperature 60 °C, derating approx. 18 %	**N08**	✓	✓	✓	✓	✓	✓	✓	✓	✓	✓	✓	✓	✓			
Temperature class 180 (H)	**N10**	✓	✓	✓	✓	✓	✓	✓	✓	✓	✓	✓	✓	✓	Not for:	①, ②, ⑧, ⑨, ⑩, ⑪, ⑫, ⑬	
Temperature class 180 (H) at rated power and max. CT 60 °C [4) 5)]	**N11**	✓	✓	✓	✓	✓	✓	✓	✓	✓	✓	✓	✓	✓	Not for:	①, ②	
Increased air humidity/temperature with 30 to 60 g water per m^3 of air	**N30**	✓	✓	✓	✓	✓	✓	✓	✓	✓	✓	✓	✓	✓			
Increased air humidity/temperature with 60 to 100 g water per m^3 of air	**N31**	✓	✓	✓	✓	✓	✓	✓	✓	✓	✓	✓	✓	✓			
Temperature class 155 (F), utilized acc. to 130 (B), with higher coolant temperature and/or installation altitude	**Y50** • and spec. power, CT .. °C or IA .... m above sea level	–	–	–	✓	✓	✓	✓	✓	✓	✓	✓	✓	✓			
Temperature class 155 (F), utilized acc. to 155 (F), other requirements [5)]	**Y52** • and spec. power, CT .. °C or IA .... m above sea level	✓	✓	✓	✓	✓	✓	✓	✓	✓	✓	✓	✓	✓			
Temperature class 180 (H), utilized according to 155 (F)	**Y75** • and spec. power, CT .. °C or IA .... m above sea level	–	–	–	✓	✓	✓	✓	✓	✓	✓	✓	✓	✓	Not for:	①, ②	
Colors and paint finish																	
Standard paint finish C2 in RAL 7030 stone gray		✓	✓	✓	✓	✓	✓	✓	✓	✓	✓	✓	✓	✓	Only for:	①, ③, ⑤, ⑦, ⑧, ⑬, ⑩, ⑪	
Unpainted (only cast-iron parts primed)	**S00**	○	○	○	○	○	○	○	○	○	○	○	○	○			
Unpainted, only primed	**S01**	✓	✓	✓	✓	✓	✓	✓	✓	✓	✓	✓	✓	✓			
Special paint finish C3	**S02**	✓	✓	✓	✓	✓	✓	✓	✓	✓	✓	✓	✓	✓	Not for:	②, ④, ⑥, ⑨, ⑫	
	–	◘	◘	◘	◘	◘	◘	◘	◘	◘	◘	◘	◘	◘	Only for:	②, ④, ⑥, ⑨, ⑫	
Special paint finish sea air resistant C4	**S03**	✓	✓	✓	✓	✓	✓	✓	✓	✓	✓	✓	✓	✓			
Special paint for use offshore C5	**S04**	✓	✓	✓	✓	✓	✓	✓	✓	✓	✓	✓	✓	✓			
Internal coating	**S05**	–	–	–	✓	✓	✓	✓	✓	✓	✓	✓	✓	✓			
Top coat polyurethane [33)]	**S06**	✓	✓	✓	✓	✓	✓	✓	✓	✓	✓	✓	✓	✓			
Paint finish in other standard RAL colors: RAL 1002, 1013, 1015, 1019, 2003, 2004, 3000, 3007, 5002, 5007, 5009, 5010, 5012, 5015, 5017, 5018, 5019, 6011, 6019, 6021, 7000, 7001, 7004, 7011, 7016, 7022, 7031, 7032, 7033, 7035, 9001, 9002, 9005 (see Catalog Section 1 "Introduction")	**Y53** • and paint finish RAL....	✓	✓	✓	✓	✓	✓	✓	✓	✓	✓	✓	✓	✓	Only for:	①, ③, ⑤, ⑦, ⑧, ⑬, ⑩, ⑪	
Paint finish in special RAL colors: For RAL colors, see "Special paint finish in special RAL colors" (see Catalog Section 1 "Introduction")	**Y56** • and paint finish RAL....	✓	✓	✓	✓	✓	✓	✓	✓	✓	✓	✓	✓	✓			

For legends and footnotes, see page 2/116.

© Siemens AG 2018

Article No. supplements and special versions
SIMOTICS SD 1LE1 standard motors

Options · Cast-iron series 1LE15 Basic Line, 1LE16 Performance Line

Special versions	Additional identification code -Z with order code and plain text if required	Frame size 71	80	90	100	112	132	160	180	200	225	250	280	315	Motor version		
					1LE1504 Basic Line										IEC	IE4	①
					1LE1604 Performance Line												②
		1LE1503 Basic Line														IE3	③
					1LE1603 Performance Line												④
		1LE1501 Basic Line														IE2	⑤
					1LE1601 Performance Line												⑥
					1LE1502 Basic Line											IE1	⑦
			1LE1543 Basic Line												APAC Line	IE3	⑧
					1LE1643 Performance Line												⑨
									1LE1541 Basic Line							IE2	⑩
		1LE1523 Basic Line													Eagle Line	NPE (NEMA)	⑪
					1LE1623 Performance Line												⑫
1LE1 . . . -. . . . . -. . . . -Z	Order code				1LE1521 Basic Line											NEE (NEMA)	⑬
Modular technology – Basic versions [6]																	
Mounting of holding brake (standard assignment) [7] [31] [32]	**F01**	–	–	–	✓	✓	✓	✓	✓	✓	✓	✓	✓	✓	Not for:	Motors in combination with order code F90	
Mounting of PRECIMA brake	**F04**	–	–	–	–	–	–	–	–	–	✓	✓	✓	✓			
Mounting of separately driven fan [28] [34]	**F70**	✓	✓	✓	✓	✓	✓	✓	✓	✓	✓	✓	✓	✓	Not for:	Motors in combination with order code F90	
Mounting of 1XP8012-10 (HTL) rotary pulse encoder [8] [9]	**G01**	✓	✓	✓	✓	✓	✓	✓	✓	✓	✓	✓	✓	✓	Not for:	Motors in combination with order code F90	
Mounting of 1XP8012-20 (TTL) rotary pulse encoder [8] [9]	**G02**	✓	✓	✓	✓	✓	✓	✓	✓	✓	✓	✓	✓	✓	Not for:	Motors in combination with order code F90	
Mounting of Kübler Sendix 5020 HTL, 1024 I rotary pulse encoder	**G11**	✓	✓	✓	✓	✓	✓	✓	✓	✓	✓	✓	✓	✓			
Mounting of Kübler Sendix 5020 TTL, 1024 I rotary pulse encoder	**G12**	✓	✓	✓	✓	✓	✓	✓	✓	✓	✓	✓	✓	✓			
Modular technology – Additional versions																	
Brake supply voltage 24 V DC	**F10**	–	–	–	✓	✓	✓	✓	✓	✓	✓	✓	✓	✓	Not for:	Motors in combination with order code F90	
Brake supply voltage 230 V AC, 50/60 Hz	**F11**	–	–	–	○	○	○	○	○	○	○	○	○	○	Not for:	Motors in combination with order code F90	
Brake supply voltage 400 V AC, 50/60 Hz [32]	**F12**	–	–	–	✓	✓	✓	✓	✓	✓	✓	✓	✓	✓	Not for:	Motors in combination with order code F90	
Backstop, counterclockwise motion blocked, clockwise direction of rotation	**F40**	–	–	–	–	–	✓	✓	✓	✓	✓	✓	✓	✓			
Backstop, clockwise motion blocked, counterclockwise direction of rotation	**F41**	–	–	–	–	–	✓	✓	✓	✓	✓	✓	✓	✓			
Mechanical manual brake release with lever (no locking)	**F50**	–	–	–	✓	✓	✓	✓	✓	✓	✓	✓	✓	✓	Not for:	Motors in combination with order code F90	
Special technology [6]																	
Mounting of LL 861 900 220 rotary pulse encoder [10]	**G04**	–	–	–	✓	✓	✓	✓	✓	✓	✓	✓	✓	✓	Not for:	Motors in combination with order code F90	
Mounting of HOG 9 DN 1024 I rotary pulse encoder [10]	**G05**	–	–	–	✓	✓	✓	✓	✓	✓	✓	✓	✓	✓	Not for:	Motors in combination with order code F90	
Mounting of HOG 10 D 1024 I rotary pulse encoder [10]	**G06**	–	–	–	✓	✓	✓	✓	✓	✓	✓	✓	✓	✓	Not for:	Motors in combination with order code F90	
Mounting of POG10D rotary pulse encoder (only in combination with separately driven fan or brake) [11]	**G07**	–	–	–	–	–	–	–	✓	✓	✓	✓	✓	✓	Not for:	Motors in combination with order code F90	
Mounting of POG9 rotary pulse encoder (only in combination with separately driven fan or brake) [11]	**G08**	–	–	–	–	–	–	–	✓	✓	✓	✓	✓	✓	Not for:	Motors in combination with order code F90	
Mounting of HOG 10 DN 1024 I rotary pulse encoder, terminal box moisture protection	**G15**	–	–	–	✓	✓	✓	✓	✓	✓	✓	✓	✓	✓	Not for:	Motors in combination with order code F90	
Mounting of HOG 10 DN 1024 I rotary pulse encoder, terminal box dust protection	**G16**	–	–	–	✓	✓	✓	✓	✓	✓	✓	✓	✓	✓	Not for:	Motors in combination with order code F90	
Mounting of rotary pulse encoder HOG 10 DN 1024 I + FSL, (integrated centrifugal switch, speed ... rpm), terminal box moisture protection	**Y74 •** and spec. speed .... rpm	–	–	–	–	–	–	–	✓	✓	✓	✓	✓	✓	Not for:	Motors in combination with order code F90	
Mounting of rotary pulse encoder HOG 10 DN 1024 I + FSL, (integrated centrifugal switch, speed .... rpm), terminal box dust protection	**Y76 •** and spec. speed .... rpm	–	–	–	–	–	–	–	✓	✓	✓	✓	✓	✓	Not for:	Motors in combination with order code F90	
Mounting of rotary pulse encoder HOG 10 DN 1024 I + ESL 93, (integrated electronic speed switch, speed .... rpm), terminal box dust protection	**Y79 •** and spec. speed (max 3) .... rpm	–	–	–	–	–	–	–	✓	✓	✓	✓	✓	✓	Not for:	Motors in combination with order code F90	

For legends and footnotes, see page 2/116.

© Siemens AG 2018

Options · Cast-iron series 1LE15 Basic Line, 1LE16 Performance Line

Special versions	Additional identification code -Z with order code and plain text if required	Frame size 71	80	90	100	112	132	160	180	200	225	250	280	315	Motor version		
					1LE1504 Basic Line										IEC	IE4	①
					1LE1604 Performance Line												②
		1LE1503 Basic Line														IE3	③
					1LE1603 Performance Line												④
		1LE1501 Basic Line														IE2	⑤
					1LE1601 Performance Line												⑥
					1LE1502 Basic Line											IE1	⑦
			1LE1543 Basic Line												APAC Line	IE3	⑧
					1LE1643 Performance Line												⑨
									1LE1541 Basic Line							IE2	⑩
		1LE1523 Basic Line													Eagle Line	NPE (NEMA)	⑪
					1LE1623 Performance Line												⑫
1LE1 . . . -. . . . . -. . . . -Z	Order code				1LE1521 Basic Line											NEE (NEMA)	⑬
Mechanical version and degrees of protection																	
Low-noise version for 2-pole motors with clockwise direction of rotation	**F77**	–	–	–	–	–	✓	✓	✓	✓	✓	✓	✓	✓	Not for:	Motors in combination with order code F90	
Low-noise version for 2-pole motors with counterclockwise direction of rotation	**F78**	–	–	–	–	–	✓	✓	✓	✓	✓	✓	✓	✓	Not for:	Motors in combination with order code F90	
Prepared for mountings, center hole only	**G40**	–	✓	✓	✓	✓	✓	✓	□	□	□	□	□	□	Not for:	Motors in combination with order code F90	
Prepared for mountings with D12 shaft	**G41**	–	✓	✓	✓	✓	✓	✓	✓	✓	✓	✓	✓	✓	Not for:	Motors in combination with order code F90	
Prepared for mountings with D16 shaft	**G42**	–	✓	✓	✓	✓	✓	✓	✓	✓	✓	✓	✓	✓	Not for:	Motors in combination with order code F90	
Mechanical protection for encoder	**G43**	✓	✓	✓	✓	✓	✓	✓	✓	✓	✓	✓	✓	✓	Not for:	Motors in combination with order code F90	
Protective cover [8) 10) 12)]	**H00**	✓	✓	✓	✓	✓	✓	✓	✓	✓	✓	✓	✓	✓	Not for:	Motors in combination with order code F90	
Screwed-on (instead of cast) feet	**H01**	–	–	–	✓	✓	✓	✓	✓	✓	✓	✓	✓	✓			
Vibration-proof version; vibration resistance to Class 3M4 according to IEC 60721-3-3:1994 [39)]	**H02**	✓	✓	✓	✓	✓	✓	✓	✓	✓	✓	✓	✓	✓			
Condensation drainage holes [38)]	**H03**	✓	✓	✓	□	□	□	□	□	□	□	□	□	□			
Rust-resistant screws (externally)	**H07**	✓	✓	✓	✓	✓	✓	✓	✓	✓	✓	✓	✓	✓			
Degree of protection IP65 [14)]	**H20**	✓	✓	✓	✓	✓	✓	✓	✓	✓	✓	✓	✓	✓			
Degree of protection IP54	**H21**	–	–	–	–	–	–	–	✓	✓	✓	✓	✓	✓			
Degree of protection IP56 [15)]	**H22**	✓	✓	✓	✓	✓	✓	✓	✓	✓	✓	✓	✓	✓			
Drive-end seal for flange-mounting motors, oil-tight to 0.1 bar [13) 29)]	**H23**	✓	✓	✓	✓	✓	✓	✓	✓	✓	✓	✓	✓	✓			
Grounding brush for converter operation	**L52**	–	–	–	–	–	–	–	–	–	–	–	✓	✓			
Coolant temperature and installation altitude																	
Coolant temperature –50 to +40 °C	**D02**	–	–	–	✓	✓	✓	✓	✓	✓	✓	✓	✓	✓			
Coolant temperature –40 to +40 °C [16)]	**D03**	✓	✓	✓	✓	✓	✓	✓	✓	✓	✓	✓	✓	✓			
Coolant temperature –30 to +40 °C [17)]	**D04**	✓	✓	✓	✓	✓	✓	✓	✓	✓	✓	✓	✓	✓			
Versions in accordance with standards and specifications																	
VIK version	**C02**	–	–	–	✓	✓	✓	✓	✓	✓	✓	✓	✓	✓	Not for:	①, ②	
CCC China Compulsory Certification	**D01**	✓	✓	✓	–	–	–	–	–	–	–	–	–	–			
Motor without CE marking for export outside EEA (see EU Directive 640/2009)	**D22**	○	○	○	○	○	○	○	○	○	○	○	○	○	Not for:	①, ②	
Electrical according to NEMA MG1-12 [18)]	**D30**	–	–	–	✓	✓	✓	✓	✓	✓	✓	✓	✓	✓	Not for:	⑪, ⑫, ⑬	
	–	□	□	□	□	□	□	□	□	□	□	□	□	□	Only for:	⑪, ⑫, ⑬	
Design according to UL with "Recognition Mark" [18)]	**D31**	–	✓	✓	✓	✓	✓	✓	✓	✓	✓	✓	✓	✓	Not for:	⑪, ⑫, ⑬	
	–	□	□	□	□	□	□	□	□	□	□	□	□	□	Only for:	⑪, ⑫, ⑬	
KEMCO Korea Energy Efficiency Label	**D33**	–	–	–	–	–	–	–	–	○	○	○	○	○	Only for:	⑧, ⑨, ⑩	
China Energy Efficiency Label	**D34**	○	○	○	○	○	○	○	○	○	○	○	○	○	Not for:	①, ② and motors with increased power	
Canadian regulations (CSA) [17)]	**D40**	✓	✓	✓	✓	✓	✓	✓	✓	✓	✓	✓	✓	✓	Not for:	⑪, ⑫, ⑬	
	–	□	□	□	□	□	□	□	□	□	□	□	□	□	Only for:	⑪, ⑫, ⑬	
TR CU product safety certificate EAC for Eurasian customs union [35)]	**D47**	–	✓	✓	✓	✓	✓	✓	✓	✓	✓	✓	✓	✓			

For legends and footnotes, see page 2/116.

© Siemens AG 2018

Article No. supplements and special versions
SIMOTICS SD 1LE1 standard motors

Options · Cast-iron series 1LE15 Basic Line, 1LE16 Performance Line

Special versions	Additional identification code -Z with order code and plain text if required	Frame size 71	80	90	100	112	132	160	180	200	225	250	280	315	Motor version		
		1LE1504 Basic Line													IEC	IE4	①
		1LE1604 Performance Line															②
		1LE1503 Basic Line														IE3	③
		1LE1603 Performance Line															④
		1LE1501 Basic Line														IE2	⑤
		1LE1601 Performance Line															⑥
		1LE1502 Basic Line														IE1	⑦
		1LE1543 Basic Line													APAC Line	IE3	⑧
		1LE1643 Performance Line															⑨
		1LE1541 Basic Line														IE2	⑩
		1LE1523 Basic Line													Eagle Line	NPE (NEMA)	⑪
		1LE1623 Performance Line															⑫
1LE1 . . . -. . . . . -. . . . -Z	Order code	1LE1521 Basic Line														NEE (NEMA)	⑬
Bearings and lubrication																	
Regreasing device with M10 × 1 grease nipple according to DIN 71412-A	**L19**	–	–	–	–	–	–	–	✓	✓	✓	✓	○	○	Only for:	①, ③, ⑤, ⑧, ⑩, ⑪, ⑬	
		–	–	–	–	–	–	–	○	○	○	○	○	○	Only for:	②, ④, ⑥, ⑨, ⑫	
Located bearing DE	**L20**	✓	✓	✓	✓	✓	✓	✓	✓	✓	✓	✓	✓	✓			
Located bearing NDE	**L21**	✓	✓	✓	✓	✓	✓	□	□	□	□	□	□	□			
Bearing design for increased cantilever forces [36]	**L22**	✓	✓	✓	✓	✓	✓	✓	✓	✓	✓	✓	✓	✓			
Regreasing device [1]	**L23**	–	–	–	✓	✓	✓	✓	✓	✓	✓	✓	□	□	Not for:	②, ④, ⑥, ⑨, ⑫	
		–	–	–	✓	✓	✓	□	□	□	□	□	□	□	Only for:	②, ④, ⑥, ⑨, ⑫	
Bearings reinforced at both ends for DE and NDE, bearing size 63 [19]	**L25**	✓	✓	✓	✓	✓	✓	✓	✓	✓	✓	✓	□	□	Not for:	②, ④, ⑥, ⑨, ⑫	
	–	□	□	□	□	□	□	□	□	□	□	□	□	□	Only for:	②, ④, ⑥, ⑨, ⑫	
Reinforced bearings at both DE and NDE, DE bearing for increased cantilever forces	**L28**	–	–	–	–	–	–	–	✓	✓	✓	✓	–	–			
Bearing insulation DE	**L50**	–	–	–	–	–	–	–	–	–	✓	✓	✓	✓			
Bearing insulation NDE	**L51**	–	–	–	✓	✓	✓	✓	✓	✓	✓	✓	✓	✓			
Measuring nipple for SPM shock pulse measurement for bearing inspection [1]	**Q01**	–	–	–	✓	✓	✓	✓	✓	✓	✓	✓	✓	✓			
Balance and vibration severity																	
Vibration severity grade A		□	□	□	□	□	□	□	□	□	□	□	□	□			
Vibration severity grade B [20]	**L00**	✓	✓	✓	✓	✓	✓	✓	✓	✓	✓	✓	✓	✓			
Half-key balancing (standard)		□	□	□	□	□	□	□	□	□	□	□	□	□			
Balancing without feather key	**L01**	✓	✓	✓	✓	✓	✓	✓	✓	✓	✓	✓	✓	✓			
Full-key balancing	**L02**	✓	✓	✓	✓	✓	✓	✓	✓	✓	✓	✓	✓	✓			
Shaft and rotor																	
Shaft extension with standard dimensions, without feather keyway	**L04**	–	–	–	✓	✓	✓	✓	✓	✓	✓	✓	✓	✓			
Standard, cylindrical shaft extension (second shaft extension) NDE acc. to EN 50347	**L05**	✓	✓	✓	✓	✓	✓	✓	✓	✓	✓	✓	✓	✓			
Standard shaft made of stainless steel (e.g. 1.4021)	**L06**	✓	✓	✓	✓	✓	✓	✓	✓	✓	✓	✓	✓	✓			
Concentricity of shaft extension in accordance with DIN 42955 Tolerance R	**L07**	✓	✓	✓	✓	✓	✓	✓	✓	✓	✓	✓	✓	✓			
Concentricity of shaft extension, coaxiality, and linear movement in accordance with DIN 42955 Tolerance R for flange-mounted motors	**L08**	✓	✓	✓	✓	✓	✓	✓	✓	✓	✓	✓	✓	✓			
Non-standard cylindrical shaft extension, DE [21]	**Y58 •** and customer specifications	✓	✓	✓	✓	✓	✓	✓	✓	✓	✓	✓	✓	✓			
Non-standard cylindrical shaft extension, NDE [21]	**Y59 •** and customer specifications	✓	✓	✓	✓	✓	✓	✓	✓	✓	✓	✓	✓	✓			
Special shaft steel	**Y60 •** and customer specifications	–	–	–	O.R.	O.R.	O.R.	O.R.	O.R.	O.R.	O.R.	O.R.	O.R.	O.R.			

For legends and footnotes, see page 2/116.

© Siemens AG 2018

Options · Cast-iron series 1LE15 Basic Line, 1LE16 Performance Line

Special versions	Additional identification code -Z with order code and plain text if required		Frame size 71	80	90	100	112	132	160	180	200	225	250	280	315	Motor version		
						1LE1504 Basic Line										IEC	IE4	①
						1LE1604 Performance Line												②
			1LE1503 Basic Line														IE3	③
						1LE1603 Performance Line												④
			1LE1501 Basic Line														IE2	⑤
						1LE1601 Performance Line												⑥
						1LE1502 Basic Line											IE1	⑦
				1LE1543 Basic Line												APAC Line	IE3	⑧
						1LE1643 Performance Line												⑨
										1LE1541 Basic Line							IE2	⑩
			1LE1523 Basic Line													Eagle Line	NPE (NEMA)	⑪
						1LE1623 Performance Line												⑫
1LE1 . . . -. . . . . -. . . . -Z	Order code					1LE1521 Basic Line											NEE (NEMA)	⑬
Heating and ventilation																		
Sheet metal fan cover	**F74**		□	□	□	✓	✓	✓	✓	✓	✓	✓	✓	✓	✓	Only for:	①, ③, ⑤, ⑦, ⑧, ⑩, ⑪, ⑬	
	–		□	□	□	□	□	□	□	□	□	□	□	□	□	Only for:	②, ④, ⑥, ⑨, ⑫	
Metal external fan [22) 28)]	**F76**		✓	✓	✓	✓	✓	✓	✓	✓	✓	✓	✓	✓	✓			
Without external fan and without fan cover	**F90**		✓	✓	✓	✓	✓	✓	✓	✓	✓	✓	✓	✓	✓			
Anti-condensation heating for 230 V (2 terminals)	**Q02**		✓	✓	✓	✓	✓	✓	✓	✓	✓	✓	✓	✓	✓			
Anti-condensation heating for 115 V (2 terminals)	**Q03**		✓	✓	✓	✓	✓	✓	✓	✓	✓	✓	✓	✓	✓			
Separately driven fan with non-standard voltage and/or frequency	**Y81** • and customer specifications		–	–	–	–	–	–	–	–	–	✓	✓	✓	✓			
Rating plate and additional rating plates																		
Additional rating plate for voltage tolerance [23)]	**B07**		✓	✓	✓	✓	✓	✓	✓	✓	✓	✓	✓	✓	✓	Not for:	8-pole motors	
Second rating plate, loose	**M10**		✓	✓	✓	✓	✓	✓	✓	✓	✓	✓	✓	✓	✓			
Rating plate, stainless steel	**M11**		✓	✓	✓	✓	✓	✓	✓	✓	✓	✓	✓	✓	✓	Only for:	①, ③, ⑤, ⑦, ⑧, ⑩, ⑪, ⑬	
						○	○	○	○	○	○	○	○	○	○	Only for:	④, ⑥, ⑨, ⑫	
	–		–	–	–	□	□	□	□	□	□	□	□	□	□	Only for:	②	
Additional rating plate with deviating rating plate data	**Y80** • and customer specifications		✓	✓	✓	✓	✓	✓	✓	✓	✓	✓	✓	✓	✓			
Additional rating plate with customer specifications	**Y82** • and customer specifications		✓	✓	✓	✓	✓	✓	✓	✓	✓	✓	✓	✓	✓			
Additional information on rating plate and on package label (max. 20 characters)	**Y84** • and customer specifications		✓	✓	✓	✓	✓	✓	✓	✓	✓	✓	✓	✓	✓			
Adhesive label, supplied loose (printed with: Article No., Serial No.: 2 lines of text)	**Y85** • and customer specifications		–	–	–	✓	✓	✓	✓	✓	✓	✓	✓	✓	✓			
Extension of the liability for defects																		
Extension of the liability for defects by 12 months to a total of 24 months (2 years) from delivery [24)]	**Q80**		–	–	–	–	–	–	–	✓	✓	✓	✓	✓	✓	Only for:	①, ③, ⑤, ⑦, ⑧, ⑩, ⑪, ⑬	
	–		–	–	–	–	–	–	–	□	□	□	□	□	□	Only for:	②, ④, ⑥, ⑨, ⑫ 36 months	
Extension of the liability for defects by 24 months to a total of 36 months (3 years) from delivery [24)]	**Q82**		–	–	–	–	–	–	–	✓	✓	✓	✓	✓	✓	Only for:	①, ③, ⑤, ⑦, ⑧, ⑩, ⑪, ⑬	
	–		–	–	–	–	–	–	–	□	□	□	□	□	□	Only for:	②, ④, ⑥, ⑨, ⑫ 36 months	
Packaging, safety notes, documentation and test certificates																		
Acceptance test certificate 3.1 according to EN 10204 [25)]	**B02**		✓	✓	✓	✓	✓	✓	✓	✓	✓	✓	✓	✓	✓			
Printed German/English Operating Instructions enclosed [26)]	**B04**		–	–	–	✓	✓	✓	✓	✓	✓	✓	✓	✓	✓			
Document - Electrical data sheet	**B60**		–	–	–	✓	✓	✓	✓	✓	✓	✓	✓	✓	✓			
Document - Order dimensional drawing	**B61**		–	–	–	✓	✓	✓	✓	✓	✓	✓	✓	✓	✓			
Standard test (routine test) with acceptance	**B65**		–	–	–	✓	✓	✓	✓	✓	✓	✓	✓	✓	✓			
Type test with heat run for horizontal motors, without acceptance	**B82**		✓	✓	✓	✓	✓	✓	✓	✓	✓	✓	✓	✓	✓			
Type test with heat run for horizontal motors, with acceptance	**B83**		✓	✓	✓	✓	✓	✓	✓	✓	✓	✓	✓	✓	✓			
"Basic" documentation package	**B90**	*New!*	✓	✓	✓	✓	✓	✓	✓	✓	✓	✓	✓	✓	✓			
"Advanced" documentation package	**B91**	*New!*	✓	✓	✓	✓	✓	✓	✓	✓	✓	✓	✓	✓	✓			
"Projects" documentation package	**B92**	*New!*	✓	✓	✓	✓	✓	✓	✓	✓	✓	✓	✓	✓	✓			
Connected in star for dispatch	**M01**		✓	✓	✓	✓	✓	✓	✓	✓	✓	✓	✓	✓	✓			
Connected in delta for dispatch	**M02**		✓	✓	✓	✓	✓	✓	✓	✓	✓	✓	✓	✓	✓			

For legends and footnotes, see page 2/116.

© Siemens AG 2018

Options · Cast-iron series 1LE15 Basic Line, 1LE16 Performance Line

- ◘ Standard version
- ○ Without additional charge
- • This order code only determines the price of the version – Additional plain text is required.
- ✓ With additional charge
- O. R. Possible on request
- – Not possible

1) Up to frame size 160 not possible when brake is mounted.

2) Evaluation with appropriate tripping unit (see Catalog IC 10) is recommended.

3) Parallel Whitworth threaded pipe DIN ISO 228 (DIN 259) BSPP (British Standard Pipe Parallel) threaded pipe for connections not sealed in the thread (cylindrical), external = G.

4) Cannot be used for motors in UL version (order code **D31**). The grease lifetime specified in Catalog Section 1 "Introduction" refers to CT 40 °C. If the coolant temperature is increased by 10 K, the grease lifetime and regreasing interval are halved.

5) Not possible for 1LE15 and 1LE16 motors with increased power.

6) A second shaft extension is not possible. Please inquire for mounted brakes.

7) For order codes **F10**, **F11**, and **F12**, the brake supply voltage must be specified or ordered.

8) The 1XP8 rotary pulse encoders are fitted with a protective cover as standard. The protective cover is omitted at the factory when a rotary pulse encoder is combined with a separately driven fan, because in this case the rotary pulse encoder is installed under the fan cover.

9) In combination with a separately driven fan (order code **F70**) the 1XP8032-10 rotary pulse encoder is used instead of 1XP8012-10 or 1XP8032-20 is used instead of 1XP8012-20.

10) The LL and HOG rotary pulse encoders up to frame size 160 are fitted with a protective cover as standard. The protective cover is omitted at the factory when a rotary pulse encoder is combined with a separately driven fan, because in this case the rotary pulse encoder is installed under the fan cover.

11) Option (encoder mounting) is only possible for motors with a mounted separately driven fan or for naturally cooled motors (without an external fan). This option can be used in combination with brakes of type KFB! This option cannot be used in combination with brakes of type 2LM8.

12) Order code **H00** provides mechanical protection for encoders.

13) Not possible for type of construction IM V3.

14) Not possible in combination with HOG 9 DN 1024 I rotary pulse encoder (order code **G05**) and/or brake 2LM8 (order code **F01**).

15) Not possible in combination with 2LM8 brake – order code **F01**.

16) In connection with mountings, the respective technical specifications must be observed, please inquire before ordering.

17) The rated voltage is indicated on the rating plate without voltage range. Order code **D40** does not authorize importing into Canada. The North America export versions Eagle Line 1LE1521 NEMA Energy Efficient and 1LE1523/1LE1623 NEMA Premium Efficient are available for this purpose.

18) Possible up to 600 V max. The rated voltage is indicated on the rating plate without voltage range. Order codes **D30** and **D31** do not authorize importing into USA and Mexico. The North America export versions Eagle Line 1LE1521 NEMA Energy Efficient and 1LE1523/1LE1623 NEMA Premium Efficient are available for this purpose.

19) For Performance Line motors (all frame sizes) and Basic Line motors (from frame size 280) in the standard version.

20) On request for 2-pole motors (concerns frame sizes 225 to 315).

21) When motors are ordered that have a longer or shorter shaft extension than normal, the required position and length of the feather keyway must be specified in a sketch. It must be ensured that only feather keys in accordance with EN 50347, Form A are used. The feather keyway is positioned centrally on the shaft extension. The length is defined by the manufacturer in accordance with the appropriate standard. Not valid for: Conical shafts, non-standard threaded journals, non-standard shaft tolerances, friction welded journals, extremely "thin" shafts, special geometry dimensions (e.g. square journals), hollow shafts. Valid for non-standard shaft extensions DE or NDE. The feather key is always supplied. For order codes **Y58**, **Y59** and **L05** the following applies:
– Dimensions D and DA ≤ ball bearing inner diameter (see dimension tables for "Dimensions")
– Dimensions E and EA ≤ 2 × length E (standard) of the shaft extension.

22) Converter operation is permitted for 1LE1 motors with metal external fans.

23) Can be ordered for 230 VΔ/400 VY or 400 VΔ/690 VY (voltage code "**22**" or "**34**"). Not possible for 8-pole motors and in combination with order code **D34**.

24) Wearing parts (bearings) are excluded from the warranty extension.

25) The delivery time for the factory test certificate may differ from the delivery time for the motor.

26) The Operating Instructions (compact) are available in PDF format for all official EU languages at http://support.automation.siemens.com/WW/view/en/40761976.

27) With **H08**, feet dimensions C and CA differ from EN 50347! Further information is available in the DT Configurator (see Appendix, "Tools and engineering").

28) Order codes **F70** and **F76** cannot be combined.

29) Not possible in combination with order codes **Q72** and **Q78**.

30) For frame sizes 100 to 132 only possible in combination with order code **R50**.

31) Not possible in combination with order codes **N05**, **N06**, **N07**, **N08**, and **N11**.

32) For frame size 315, when combining order codes **F01** and **F12**, the rectifier for the brake will be supplied separately as a single part.

33) Order code **S06** cannot be combined with order codes **S00**, **S01**, and **S02**. It can be combined with **Y53** and **Y56** on request.

34) Order codes **F70** (separately driven fan) and **H02** (vibration-proof version) cannot be combined for motors in frame sizes 71, 80, and 90.

35) Please note the additional use of order code **D22** "Motor without CE marking for export outside EEA (see EU Directive 640/2009)".

36) A minimum cantilever force F_{min} of 0.5 · F_{max} is required for NU bearings (cylindrical roller bearings) in contrast to ball bearings. Cylindrical roller bearings are not suitable for coupling output or for brief periods of no-load operation without cantilever force.

37) Order code **R62** only possible in combination with **R50**.

38) Supplied with the condensation drainage holes sealed at the drive end DE and non-drive end NDE (IP55, IP56, IP65). If the condensation drainage holes are required for motors of the IM B6, IM B7, or IM B8 type of construction (feet on side or top), the motors must be ordered in the respective type of construction and with order code **H03**, so that the condensation drainage holes will be placed in the correct position.

39) Not possible in combination with order code **R50**.

40) Not UL certified. Not in combination with option **D31**.

41) With IM B5 flange, only possible in combination with **H08**.

© Siemens AG 2018

Overview

Couplings

The motor from Siemens is connected to the machine or gear unit through a coupling. Siemens is an important coupling manufacturer with a wide range of products.

For standard applications, Siemens recommends that flexible couplings, types N-EUPEX and RUPEX or torsionally rigid couplings, types ARPEX and ZAPEX are used. For special applications, FLUDEX and ELPEX-S couplings are recommended.

Available from:

Siemens contact partner - ordering from catalog
Siemens MD 10.1 "FLENDER Standard Couplings"

or

Siemens AG
Kupplungswerk Mussum
Industriepark Bocholt
Schlavenhorst 100
46395 Bocholt, Germany
Phone +49 (2871) 922185
Fax +49 (2871) 922579

www.siemens.com
Email: flendercouplings@siemens.com

Taper pins according to DIN 258 with threaded ends and constant taper lengths

Taper pins are used for components that are repeatedly removed. The drilled hole is conically ground using a conical reamer until the pin can be pushed in by hand until the cone shoulder lies approx. 3 to 4 mm above the rim of the hole.

It can then be driven in using a hammer until it is correctly seated. The pin is removed from the drilled hole by screwing on the nut and tightening it.

Standardized taper pins are commercially available.

For instance, available from:

Otto Roth GmbH & Co. KG
Rutesheimer Strasse 22
70499 Stuttgart, Germany
Phone +49 (711) 1388-0
Fax. +49 (711) 1388-233

www.ottoroth.de
Email: info@ottoroth.de

Foundation block according to DIN 799

The foundation blocks are inserted into the stone foundation and embedded in concrete. They are used for fixing machines of medium size, slide rails, pedestal bearings, base frames, etc. After the fixing bolts have been unscrewed, the machines can be shifted without them having to be lifted.

When the machine is initially installed, the foundation block that is bolted to the machine (without shims) and fitted with taper pins is not embedded with concrete until the machine has been completely aligned. In this case, the machine is positioned 2 to 3 mm lower. The difference in shaft height is compensated for by inserting shims on final installation. The taper pins safeguard the exact position of the machine when it is repeatedly removed and replaced without the need for realignment.

Available from:

Lütgert & Co. GmbH
Postfach 42 51
33276 Gütersloh, Germany
Phone +49 (5241) 7407-0
Fax +49 (5241) 7407-90

www.luetgert-antriebe.de
Email: info@luetgert-antriebe.de

Slide rails with fixing bolts and tensioning screws according to DIN 42923

Slide rails are used to tension the belt of a machine easily and conveniently when a belt tightener is not available. They are fixed to the base using stone bolts or foundation blocks.

The assignment of slide rails to motor size can be found in DIN 42923.
For motors of frame sizes 355 to 450, there are no standardized slide rails (please inquire).

Available from:

Lütgert & Co. GmbH
Postfach 42 51
33276 Gütersloh, Germany
Phone +49 (5241) 7407-0
Fax +49 (5241) 7407-90

www.luetgert-antriebe.de
Email: info@luetgert-antriebe.de

More information

Spare motors and repair parts

- Supply commitment for spare motors and repair parts following delivery of the motor:
  - For up to 3 years after delivery of the original motor, in the event of total motor failure, Siemens will supply a comparable spare motor with regard to the mounting dimensions and functions. (The type series may vary.)
  - If a spare motor is supplied within the 3-year period, this does not mean that the warranty restarts.
  - Replacement motors delivered after the active production of the machine series are also identified as spare motors on the rating plate.
  - Spare parts are offered only for these spare motors on request; repair and replacement are not possible.
  - After a period of 3 years (after the delivery of the original motor), it is only possible to repair these motors (depending on the availability of the spare parts required).
  - For up to 5 years after the delivery of the original motor, spare parts will be available and for a further 5 years, Siemens will provide information about spare parts and will supply documents when required.
- When repair parts are ordered, the following details must be provided:
  - Designation and part number
  - Article No. and factory number of the motor.

  Example for ordering a fan cover 1LE1003, frame size 112 M, 4-pole:

  Fan cover No. 7.40, 1LE1003-1BB23-4AA4-Z, part No. E1001/5236197_01_001
- For bearing types, see Catalog Section 1 "Introduction".
- Repair parts for 1MJ6, 1MJ7, 1MJ8, 1MJ1, 1ME8, 1ML8 motors are available on request.
- For standard components, a commitment to supply repaired parts does not apply.
- Support hotline
  In Germany
  Phone: +49 (180) 5050448

You will find telephone numbers for other countries on our Internet site:
www.siemens.com/automation/service&support

© Siemens AG 2018

Overview

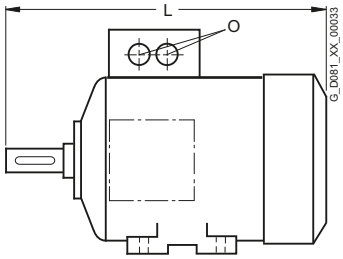

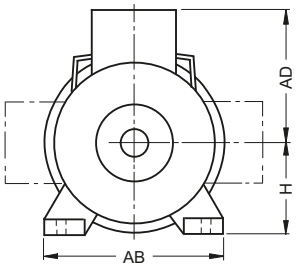

Frame size	Type	Dimension L	AD	H	AB	O
71 M	Cast-iron series, self-ventilated					
	1LE1501, 1LE1521, 1LE1503-, 1LE1523-0CA2, 0CB2, 0CC2	240	149	71	132	1 × M16 × 1.5 + 1 × M25 × 1.5
	1LE1503-, 1LE1523-0CA3, 0CB3, 0CC3	280	149	71	132	1 × M16 × 1.5 + 1 × M25 × 1.5
80 M	Aluminum series, self-ventilated					
	1LE1001, 1LE1003, 1LE1023	292	121.5	80	150	1 × M25 × 1.5
	Aluminum series, self-ventilated with increased power					
	1LE1001, 1LE1002	378	121.5	80	150	1 × M25 × 1.5
	Aluminum series, forced-air cooled or naturally cooled					
	1LE1001, 1LE1023, 1LE1043	253	122	80	150	1 × M25 × 1.5
	Cast-iron series, self-ventilated					
	1LE1501, 1LE1521, 1LE1503-, 1LE1523-0DA2, 0DB2, 0DC2	292	159	80	150	1 × M16 × 1.5 + 1 × M25 × 1.5
	1LE1503-, 1LE1523-0DA3, 0DB3, 0DC3	327	159	80	150	1 × M16 × 1.5 + 1 × M25 × 1.5
90 S/ 90 L	Aluminum series, self-ventilated					
	1LE1001	347	126	90	165	1 × M25 × 1.5
	Aluminum series, self-ventilated with increased power					
	1LE1001, 1LE1002	387	126	90	165	1 × M25 × 1.5
	Aluminum series, forced-air cooled or naturally cooled					
	1LE1001, 1LE1003, 1LE1023	295	126	90	165	1 × M25 × 1.5
	Cast-iron series, self-ventilated					
	1LE1501, 1LE1521, 1LE1503-, 1LE1523-0EA0, 0EB0, 0EC0	347/387	164	90	165	1 × M16 × 1.5 + 1 × M25 × 1.5
	1LE1503-, 1LE1523-0EA4, 0EB4, 0EC4	347/387	164	90	165	1 × M16 × 1.5 + 1 × M25 × 1.5
100 L	Aluminum series, self-ventilated					
	1LE1001, 1LE1002, 1LE1003, 1LE1011, 1LE1012, 1LE1021, 1LE1023	396 [1]	166	100	196	2 × M32 × 1.5
	1LE1004	431	166	100	196	
	Aluminum series, self-ventilated with increased power					
	1LE1001, 1LE1002	431 [1]	166	100	196	2 × M32 × 1.5
	Aluminum series, forced-air cooled or naturally cooled					
	1LE1001, 1PC1001, 1LE1002, 1PC1002, 1LE1021	324	166	100	196	2 × M32 × 1.5
	Aluminum series, self-ventilated					
	1LE1003, 1LE1023	431	166	100	196	2 × M32 × 1.5
	Aluminum series, forced-air cooled					
	1LE1023	357	166	100	196	2 × M32 × 1.5
	Cast-iron series, self-ventilated					
	1LE1501, 1LE1503, 1LE1504, 1LE1521, 1LE1601, 1LE1603, 1LE1604,	397.5	193	100	196	2 × M32 × 1.5
	1LE1523, 1LE1623	425	193	100	196	2 × M32 × 1.5

Frame size	Type	Dimension L	AD	H	AB	O
112 M	Aluminum series, self-ventilated					
	1LE1001, 1LE1002, 1LE1003, 1LE1011, 1LE1012, 1LE1021, 1LE1023	389 [1]	177	112	226	2 × M32 × 1.5
	1LE1004	414	177	112	226	
	Aluminum series, self-ventilated with increased power					
	1LE1001, 1LE1002	414 [1]	177	112	226	2 × M32 × 1.5
	Aluminum series, forced-air cooled or naturally cooled					
	1LE1001, 1PC1001, 1LE1002, 1PC1002, 1LE1021	311	177	112	226	2 × M32 × 1.5
	Aluminum series, self-ventilated					
	1LE1003, 1LE1023	414	177	112	226	2 × M32 × 1.5
	Aluminum series, forced-air cooled					
	1LE1023	336	177	112	226	2 × M32 × 1.5
	Cast-iron series, self-ventilated					
	1LE1501, 1LE1503, 1LE1504, 1LE1521, 1LE1601, 1LE1603, 1LE1604	390.5	195	112	226	2 × M32 × 1.5
	1LE1523, 1LE1623	415.5	195	112	226	2 × M32 × 1.5
132 S/M	Aluminum series, self-ventilated					
	1LE1001, 1LE1002, 1LE1003, 1LE1011, 1LE1012, 1LE1021, 1LE1023	465 [1]	202	132	256	2 × M32 × 1.5
	1LE1004	465/515	202	132	256	
	Aluminum series, self-ventilated with increased power					
	1LE1001, 1LE1002, 1LE1003	515 [1]	202	132	256	2 × M32 × 1.5
	Aluminum series, forced-air cooled or naturally cooled					
	1LE1001, 1PC1001, 1LE1002, 1PC1002, 1LE1021	381	202	132	256	2 × M32 × 1.5
	Aluminum series, self-ventilated					
	1LE1003-, 1LE1023-					
	1CA0, 1CC0, 1CC2	465	202	132	256	2 × M32 × 1.5
	1CA1, 1CB0, 1CB2, 1CC3	515	202	132	256	2 × M32 × 1.5
	Aluminum series, forced-air cooled					
	1LE1023-					
	1CA0, 1CC0, 1CC2	381	202	132	256	2 × M32 × 1.5
	1CA1, 1CB0, 1CB2, 1CC3	431	202	132	256	2 × M32 × 1.5
	Cast-iron series, self-ventilated					
	1LE1501, 1LE1503, 1LE1504, 1LE1521, 1LE1601, 1LE1603	466.5	214.5	132	256	2 × M32 × 1.5
	1LE1523-, LE1623-					
	1CA0, 1CC0, 1CC2	466.5	214.5	132	256	2 × M32 × 1.5
	1CA1, 1CB0, 1CB2, 1CC3	516.5	214.5	132	256	2 × M32 × 1.5

[1] The length is specified as far as the tip of the fan cover.

© Siemens AG 2018

Overview (continued)

Frame size	Type	Dimension L	AD	H	AB	O
160 M/L	Aluminum series, self-ventilated					
	1LE1001, 1LE1002, 1LE1003, 1LE1011, 1LE1012, 1LE1021, 1LE1023	604 [1) 2)]	237	160	300	2 × M40 × 1.5
	Aluminum series, self-ventilated with increased power					
	1LE1001, 1LE1002, 1LE1003	664 [1)]	237	160	300	2 × M40 × 1.5
	Aluminum series, forced-air cooled or naturally cooled					
	1LE1001, 1PC1001, 1LE1002, 1PC1002, 1LE1021	510	237	160	300	2 × M40 × 1.5
	Cast-iron series, self-ventilated					
	1LE1501, 1LE1503, 1LE1504, 1LE1521, 1LE1601, 1LE1603, 1LE1604	606	265	160	300	2 × M40 × 1.5
160 M	Aluminum series, self-ventilated					
	1LE1003, 1LE1023	604	237	160	300	2 × M40 × 1.5
	1LE1004	604	237		300	
	Aluminum series, forced-air cooled					
	1LE1023, 1LE1043	510	237	160	300	2 × M40 × 1.5
	Cast-iron series, self-ventilated					
	1LE1523, 1LE1623	596	261	160	300	2 × M40 × 1.5
160 L	Aluminum series, self-ventilated					
	1LE1003, 1LE1023	664	237	160	300	2 × M40 × 1.5
	1LE1004	664	237	160	300	
	Aluminum series, forced-air cooled					
	1LE1023, 1LE1043	570	237	160	300	2 × M40 × 1.5
	Cast-iron series, self-ventilated					
	1LE1523, 1LE1623	666	237	160	300	2 × M40 × 1.5
180 M	Aluminum series, self-ventilated					
	1LE1001, 1LE1003, 1LE1023					
	1EA2, 1EB2	699	259	180	339	2 × M40 × 1.5
	Aluminum series, forced-air cooled or naturally cooled					
	1LE1001, 1LE1021	592	259	180	339	2 × M40 × 1.5
	Cast-iron series, self-ventilated					
	1LE15.1-, 1LE16.1-, 1LE1504					
	1EA2, 1EB2	668	286	180	339	2 × M40 × 1.5
	1EA6	698				
	1LE15.3-, 1LE16.3-, 1LE1604					
	1EB2	668	286	180	339	2 × M40 × 1.5
	1EA2	698				
180 L	Aluminum series, self-ventilated					
	1LE1001					
	1EB4, 1EC4, 1ED4	699	259	180	339	2 × M40 × 1.5
	1EA6, 1EB6, 1EC6, 1ED6	698				
	Aluminum series, forced-air cooled or naturally cooled					
		642	296	180	378	2 × M40 × 1.5
	Aluminum series, self-ventilated with increased power					
	1LE1001, 1LE1002, 1LE1003	699	259	180	339	
	Cast-iron series, self-ventilated					
	1LE15.1-, 1LE16.1-, 1LE1504					
	1EC4, 1EC6	668	286	180	339	2 × M40 × 1.5
	1EB6	698				
	1LE15.3-, 1LE16.3-, 1LE1604					
	1EC4	668	286	180	339	2 × M40 × 1.5
	1EB4	698				

Frame size	Type	Dimension L	AD	H	AB	O
200 L	Aluminum series, self-ventilated					
	1LE1001, 1LE1003, 1LE1023					
	2AA4, 2AA5, 2AB5, 2AC4, 2AC5, 2AD5	746	296	200	378	2 × M50 × 1.5
	2AA6, 2AB6, 2AC6, 2AD6	746				
	Aluminum series, self-ventilated with increased power					
	1LE1001, 1LE1002, 1LE1003	746	296	180	378	
	Cast-iron series, self-ventilated					
	1LE15.1-, 1LE16.1-, 1LE1504					
	2AA4, 2AA5, 2AB5, 2AC4, 2AC5	721	315	200	378	2 × M50 × 1.5
	2AA6	746				
	1LE15.3-, 1LE16.3-, 1LE1604					
	2AA4, 2AC4	721	315	200	378	2 × M50 × 1.5
	2AA5, 2AB5, 2AC5	746				
225 S	Cast-iron series, self-ventilated					
	1LE15.1-, 1LE16.1-, 1LE1504					
	2BB0, 2BD0	788	338	225	436	2 × M50 × 1.5
	1LE15.3-, 1LE16.3-, 1LE1604					
	2BB0	788	338	225	436	2 × M50 × 1.5
225 M	Cast-iron series, self-ventilated					
	1LE15.1-, 1LE16.1-, 1LE1504					
	2BA2, 2BA6	818	338	225	436	2 × M50 × 1.5
	2BB2, 2BB6, 2BC2, 2BC6, 2BD6	848				
	1LE15.3-, 1LE16.3-, 1LE1604					
	2BA2	818	338	225	436	2 × M50 × 1.5
	2BB2, 2BC2	848				
250 M	Cast-iron series, self-ventilated					
	1LE15.1-, 1LE16.1-, 1LE1504					
	2CA2, 2CA6, 2CB2, 2CC2, 2CC6, 2CD2, 2CD6	887	410	250	490	2 × M63 × 1.5
	2CB6	957				
	1LE15.3-, 1LE16.3-, 1LE1604					
	2CA2, 2CB2, 2CC2	887	410	250	490	2 × M63 × 1.5
280 S	Cast-iron series, self-ventilated					
	1LE15.1-, 1LE16.1-, 1LE1504					
	2DA0, 2DB0, 2DC0, 2DD0	960	433	280	540	2 × M63 × 1.5
	1LE15.3, 1LE16.3, 1LE1604					
	2DA0, 2DB0, 2DC0	960	433	280	540	2 × M63 × 1.5
280 M	Cast-iron series, self-ventilated					
	1LE15.1-, 1LE16.1-, 1LE1504					
	2DA2, 2DB2, 2DC2, 2DC6, 2DD2, 2DD6	960	433	280	540	2 × M63 × 1.5
	2DA6, 2DB6	1070				
	1LE15.3-, 1LE16.3-, 1LE1604					
	2DC2	960	433	280	540	2 × M63 × 1.5
	2DA2, 2DB2	1070				

[1)] The length is specified as far as the tip of the fan cover.

[2)] Only for pole-changing types 1LE1011-1DP6 and 1LE1012-1DQ6 the dimension L is 664 mm.

© Siemens AG 2018

2

Overview (continued)

Frame size	Type	Dimension L	AD	H	AB	O
315 S	Cast-iron series, self-ventilated					
	1LE15.1-, 1LE16.1-, 1LE1504					
	3AA0	1052	515	315	610	2 × M63 × 1.5
	3AB0, 3AC0, 3AD0	1082				
	1LE15.3-, 1LE16.3-, 1LE1604					
	3AA0	1052	515	315	610	2 × M63 × 1.5
	3AB0, 3AC0	1082				
315 M	Cast-iron series, self-ventilated					
	1LE15.1-, 1LE16.1-, 1LE1504					
	3AC2, 3AD2	1082	515	315	610	2 × M63 × 1.5
	3AA2	1217				
	3AB2	1247				
	1LE15.3-, 1LE16.3-, 1LE1604					
	3AA2	1217	515	315	610	2 × M63 × 1.5
	3AB2, 3AC2	1247				
315 L	Cast-iron series, self-ventilated					
	1LE15.1-, 1LE16.1-, 1LE1504					
	3AA4	1217	515	315	610	2 × M63 × 1.5
	3AB4, 3AC4, 3AC5, 3AD4, 3AD5, 3AD6	1247				
	3AA5, 3AA6	1372				
	3AB5, 3AB6, 3AC6	1402				
	1LE15.3-, 1LE16.3-, 1LE1604					
	3AA4	1217	515	315	610	2 × M63 × 1.5
	3AB4, 3AC4	1247	515	315	610	2 × M63 × 1.5
	3AA5	1372				
	3AB5, 3AC5, 3AC6	1402				

© Siemens AG 2018

Overview

- Dimensional drawings according to EN 50347 and IEC 60072.
- Fits
  The shaft extensions specified in the dimension tables (DIN 748) and centering spigot diameters (EN 50347) are machined with the following fits:

Dimension designation	ISO fit DIN ISO 286-2	
D, DA	to 30	j6
	over 30 to 50	k6
	over 50	m6
N	to 250	j6
	over 250	h6
F, FA		h9
K		H17
S	Flange (FF)	H17

  The drilled holes of couplings and belt pulleys should have an ISO fit of at least H7.

- Dimension tolerances
  For the following dimensions, the admissible deviations are given below:

Dimension designation	Dimension	Admissible deviation
H	to 250	– 0.5
	over 250	– 1.0
E, EA		– 0.5

  Keyways and feather keyways (dimensions GA, GC, F, and FA) are made in compliance with DIN 6885 Part 1.
- All dimensions are specified in mm.

Dimension sheet generator (within the DT Configurator)

Overview

A dimensional drawing can be created in the Drive Technology (DT) Configurator for every configurable motor. A dimensional drawing can be requested for every other motor.

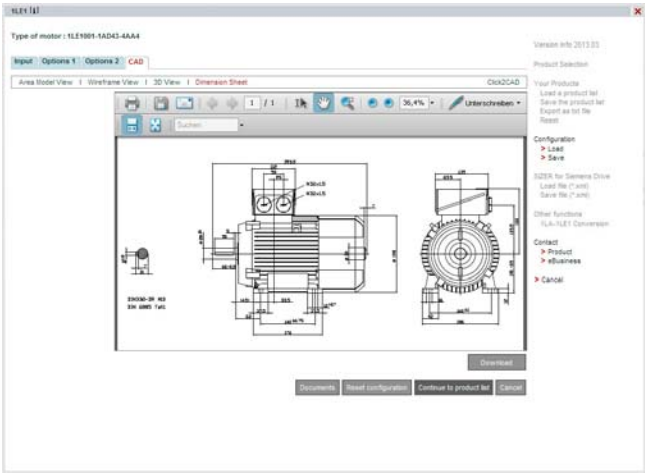

When a complete Article No. is entered or configured with or without order codes, a dimensional drawing can be called up under the "Documentation" tab.
These dimensional drawings can be presented in different views and sections and printed.
The corresponding dimension sheets can be exported, saved and processed further in DXF format (interchange/import format for CAD systems) or as bitmap graphics.

Online access in the Siemens Industry Mall

The DT Configurator is integrated into the Siemens Industry Mall and can be used on the Internet without installation.
German: www.siemens.de/dt-konfigurator
English: www.siemens.com/dt-configurator

Offline access in the Interactive Catalog CA 01

The DT Configurator is also integrated on the DVD of the Interactive Catalog CA 01 – the offline version of Siemens Industry Mall. CA 01 can be ordered from the relevant Siemens sales office or via the Internet:
www.siemens.com/automation/CA01

© Siemens AG 2018

Dimensional drawings

Type of construction IM B3

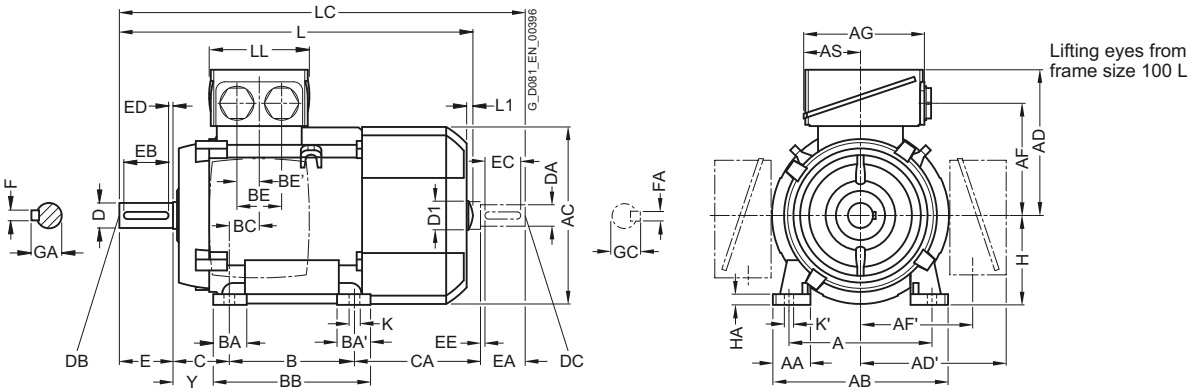

Types of construction IM B5 and IM V1

For flange dimensions, see page 1/53 (Z = the number of retaining holes)

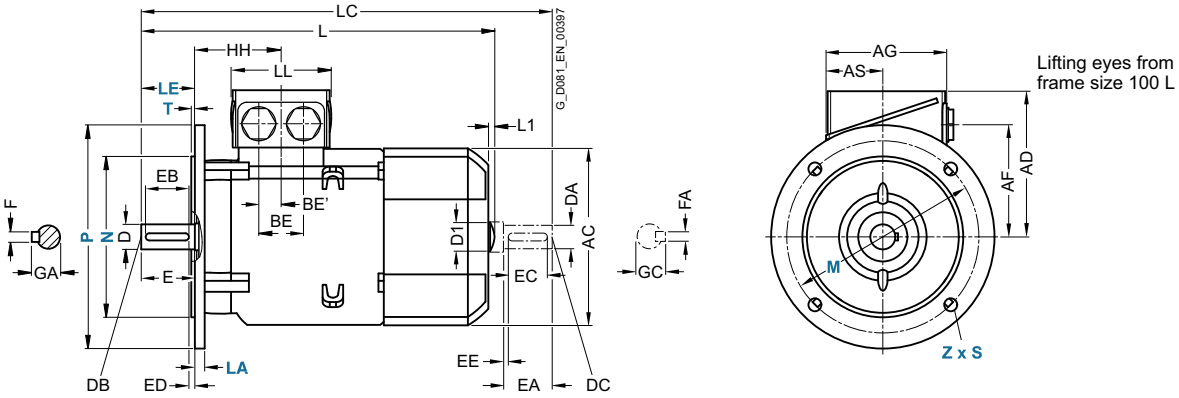

For motor			Dimension designation acc. to **IEC**																				
Frame size	Motor type 1LE100. 1LE101. 1LE1021	No. of poles	A	AA	AB	AC	AD	AD'	AF	AF'	AG	AS	B	BA	BA'	BB	BC	BE	BE'	C	CA	H	HA	Y
63 M	1LE100.-0B.2 1LE1002-0B.3	2, 4, 6	100	27	120	124	101	101	78	78	75	37.5	80	27	–	96	30	32	32	40	66	63	7	26.5
	1LE1001-0B.3 1LE1002-0B.6	2, 4																			92			
71 M	1LE1001, 1LE1002	2, 4, 6, 8	112	27	132	145	111	111	88	88	75	37.5	90	27	–	106	18	18	18	45	83	71	7	31.5
80 M	1LE1001 1LE1041	2, 4, 6	125	30.5	150	159	121.5	121.5	96.5	96.5	93	43	100	32	32	118	23	–	18[1]	50	113	80	8	41
90 S		2, 4, 6	140	30.5	165	178	126	126	101.5	101.5	93	43	100	33	54	143	22.5	–	18[1]	56	174	90	10	47
90 L		2, 4, 6	140	30.5	165	178	126	126	101.5	101.5	93	43	125	33	54	143	22.5	–	18[1]	56	174	90	10	47
100 L	All	2, 4, 6, 8	160	42	196	198	166	166	125.5	125.5	135	63.5	140	37.5	37.5	176	33.5	50	25	63	141	100	12	45
112 M	All	2, 4, 6, 8	190	46	226	222	177	177	136.5	136.5	135	63.5	140	37.5	37.5	176	26	50	25	70	130	112	12	52
132 S	All	2, 4, 6, 8	216	53	256	262	202	202	159.5	159.5	155	70.5	140	38	76[3]	218[4]	26.5	48	24	89	167	132	15	69
132 M	All	2, 4, 6, 8	216	53	256	262	202	202	159.5	159.5	155	70.5	178	38	76	218	26.5	48	24	89	179	132	15	69
160 M	All	2, 4, 6, 8	254	60	300	314	236.5	236.5	190	190	175	77.5	210	44	89[5]	300[6]	47	57	28.5	108	192	160	18	85
160 L	All	2, 4, 6, 8	254	60	300	314	236.5	236.5	190	190	175	77.5	254	44	89	300	47	57	28.5	108	148[2]	160	18	85
180 M	All	2, 4, 6, 8	279	65	339	356	259	259	212.5	212.5	175	77.5	241	80	100	328	30	57	28.5	121	232	180	20	95
180 L	All	2, 4, 6, 8	279	65	339	356	259	259	212.5	212.5	175	77.5	279	80	100	328	30	57	28.5	121	194	180	20	95
200 L	All	2, 4, 6, 8	318	70	378	396	296	296	238	238	225	102.5	305	90	100	355	45	75	37.5	133	202	200	25	108

[1] Only one termination hole available.

[2] Only for pole-changing types 1LE1011-1DP6 and 1LE1012-1DQ6 the dimension CA* is 208 mm.

[3] With screwed-on feet, dimension BA' is 38 mm.

[4] With screwed-on feet, dimension BB is 180 mm.

[5] With screwed-on feet, dimension BA' is 44 mm.

[6] With screwed-on feet, dimension BB is 256 mm.

© Siemens AG 2018

2

Dimensional drawings (continued)

Type of construction IM B35

For flange dimensions, see page 1/53 (**Z** = the number of retaining holes)

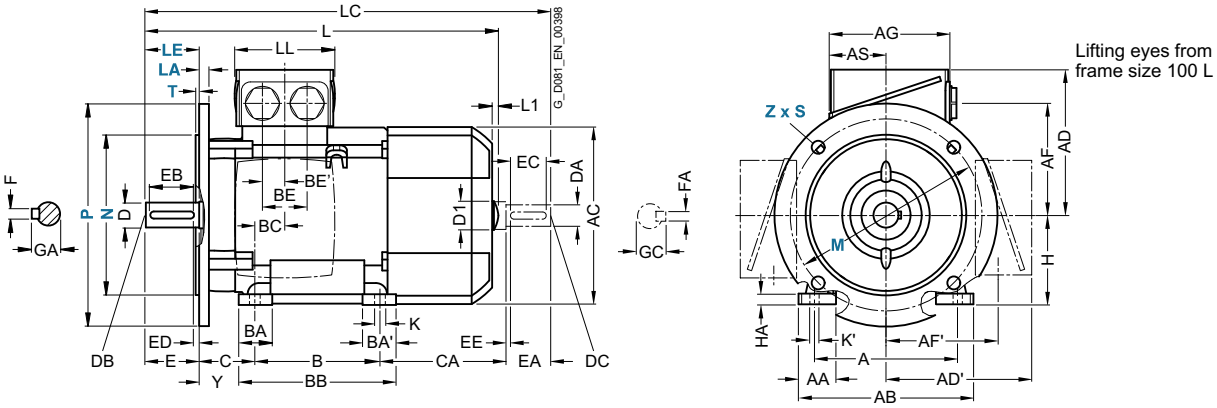

Type of construction IM B14

For flange dimensions, see page 1/53 (**Z** = the number of retaining holes)

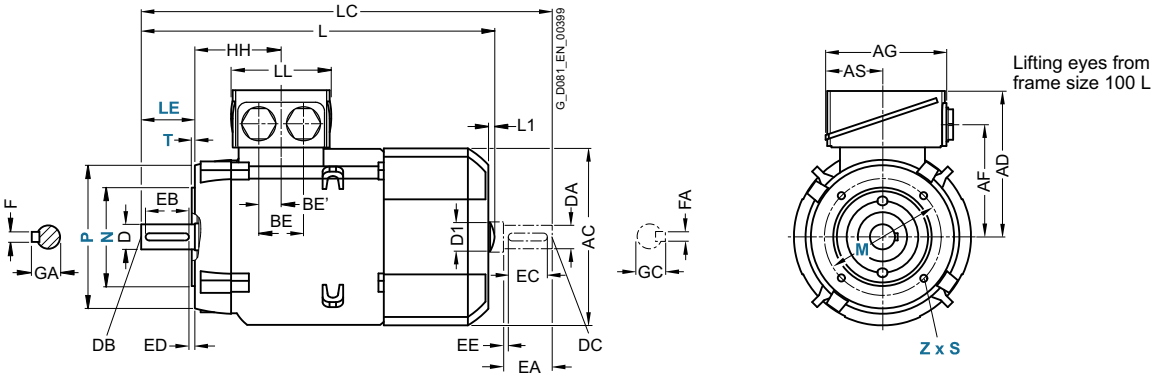

For motor			Dimension designation acc. to **IEC**								DE shaft extension							NDE shaft extension						
Frame size	Motor type 1LE100. 1LE101. 1LE1021	No. of poles	HH	K	K'	L[1]	L1	D1	LC	LL	D	DB	E	EB	ED	F	GA	DA	DC	EA	EC	EE	FA	GC
63 M	1LE100.-0B.2 1LE1002-0B.3	2, 4, 6	69.5	7	10	202.5[4]	–	–	232[4]	75	11	M4	23	16	3.5	4	12.5	11	M4	23	16	3.5	4	12.5
	1LE1001-0B.3 1LE1002-0B.6	2, 4				228.5			258															
71 M	1LE1001, 1LE1002	2, 4, 6, 8	63.5	7	10	240	–	–	278	75	14	M5	30	22	4	5	16	14	M5	30	22	4	5	16
80 M	1LE1001 1LE1041	2, 4, 6	73	9.5	13.5	292	–	–	342.5	79	19	M6	40	32	4	6	21.5	19	M6	40	32	4	6	21.5
90 S		2, 4, 6	78.5	10	14	347	–	–	405	79	24	M8	50	40	5	8	27	19	M6	40	32	4	6	21.5
90 L		2, 4, 6	78.5	10	14	347	–	–	405	79	24	M8	50	40	5	8	27	19	M6	40	32	4	6	21.5
100 L	All	2, 4, 6, 8	96.5	12	16	395.5	7	32	454	112	28	M10	60	50	5	8	31	24	M8	50	40	5	8	27
112 M	All	2, 4, 6, 8	96	12	16	389 414	7	32	450 475	112	28	M10	60	50	5	8	31	24	M8	50	40	5	8	27
132 S	All	2, 4, 6, 8	115.5	12	16	465	8.5	39	535.5	130	38	M12	80	70	5	10	41	28	M10	60	50	5	8	31
132 M	All	2, 4, 6, 8	115.5	12	16	465	8.5	39	535.5	130	38	M12	80	70	5	10	41	28	M10	60	50	5	8	31
160 M	All	2, 4, 6, 8	155	15	19	604	10	45	730	145	42	M16	110	90	10	12	45	42	M16	110	90	10	12	45
160 L	All	2, 4, 6, 8	155	15	19	604[2]	10	45	730[3]	145	42	M16	110	90	10	12	45	42	M16	110	90	10	12	45
180 M	All	2, 4, 6, 8	151	14.5	19	698	–	–	814	145	48	M16	110	100	5	14	52	48	M16	110	100	5	14	52
180 L	All	2, 4, 6, 8	151	14.5	19	698	–	–	814	145	48	M16	110	100	5	14	52	48	M16	110	100	5	14	52
200 L	All	2, 4, 6, 8	178	18.5	25	746	–	–	860	185	55	M20	110	100	5	16	59	55	M20	110	100	5	16	59

[1] The length is specified as far as the tip of the fan cover.

[2] Only for pole-changing types 1LE1011-1DP6 and 1LE1012-1DQ6 the dimension L is 664 mm.

[3] Only for pole-changing types 1LE1011-1DP6 and 1LE1012-1DQ6 the dimension LC is 790 mm.

[4] For 1LE1002-0B.3 with the type of construction code letters (14th position of the article number) **F**, **G**, **H** (IM B5, IM V1 without protective cover, IM V3) is dimension L 228.5 mm. Dimension LC is 258 mm.

© Siemens AG 2018

Dimensional drawings

Type of construction IM B3

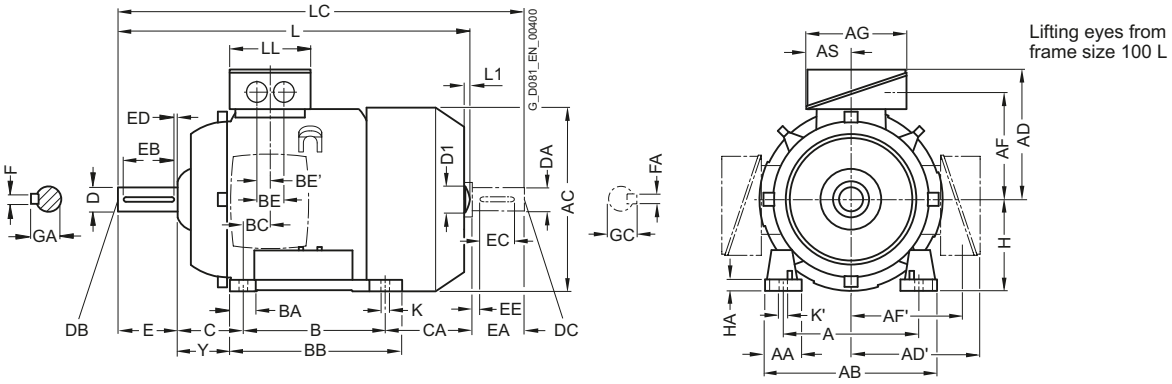

Types of construction IM B5 and IM V1

For flange dimensions, see page 1/53 (**Z** = the number of retaining holes)

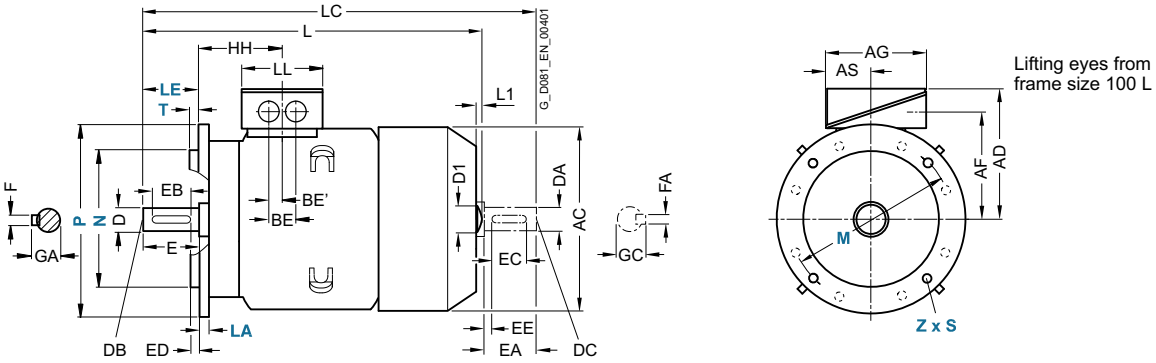

For motor			Dimension designation acc. to **IEC**																					
Frame size	Motor type 1LE1001 1LE1002 1LE1041	No. of poles	A	AA	AB	AC	AD	AD'	AF	AF'	AG	AS	B	BA	BA'	BB	BC	BE	BE'	C	CA	H	HA	Y
80 M	All	2, 4	125	30.5	150	159	121.5	121.5	96.5	96.5	93	43	100	32	32	118	23	–	18[1)]	50	148	80	8	41
90 L	All	2, 4	140	30.5	165	178	126	126	101.5	101.5	93	43	125	33	54	143	22.5	–	18[1)]	56	174	90	10	47
100 L	All	2, 4, 6, 8	160	42	196	198	166	166	125.5	125.5	135	63.5	140	37.5	37.5	176	33.5	50	25	63	176	100	12	45
112 M	All	2, 4, 6, 8	190	46	226	222	177	177	136.5	136.5	135	63.5	140	37.5	37.5	176	26	50	25	70	155	112	12	52
132 M	All	2, 4, 6, 8	216	53	256	262	202	202	159.5	159.5	155	70.5	178	38	76	218	26.5	48	24	89	179	132	15	69
160 L	All	2, 4, 6, 8	254	60	300	314	236.5	236.5	190	190	175	77.5	254	44	89	300	47	57	28.5	108	208	160	18	85
180 L	1LE1001 1LE1002	2, 4, 6, 8	279	65	339	356	259	259	212.5	212.5	175	77.5	279	80	100	328	30	57	28.5	121	194	180	20	95
200 L	1LE1001 1LE1002	2, 4, 6, 8	318	70	378	396	296	296	238	238	225	102.5	305	90	100	355	45	75	37.5	133	202	200	25	108

[1)] Only one termination hole available.

© Siemens AG 2018

Dimensional drawings (continued)

Type of construction IM B35

For flange dimensions, see page 1/53 (**Z** = the number of retaining holes)

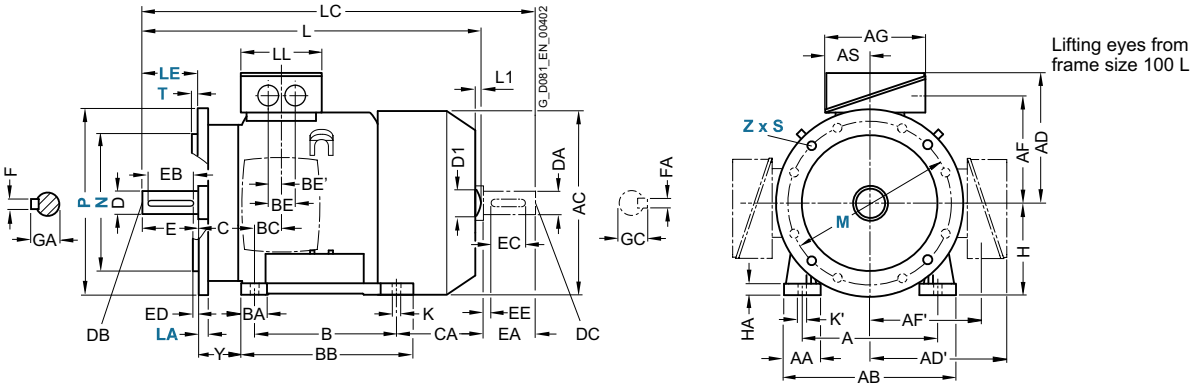

Type of construction IM B14

For flange dimensions, see page 1/53 (**Z** = the number of retaining holes)

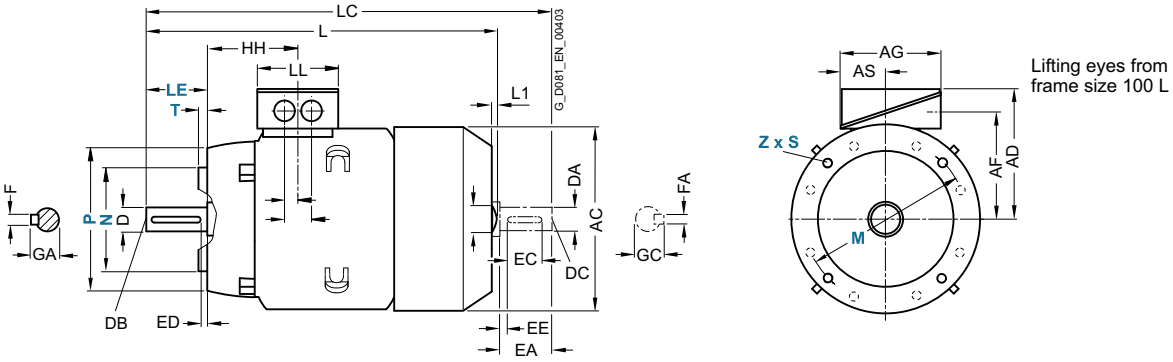

For motor			Dimension designation acc. to **IEC**								DE shaft extension						NDE shaft extension							
Frame size	Motor type 1LE1001 1LE1002 1LE1041	No. of poles	HH	K	K'	L [1]	L1	D1	LC	LL	D	DB	E	EB	ED	F	GA	DA	DC	EA	EC	EE	FA	GC
80 M	All	2, 4	73	9.5	13.5	327	327	–	378	79	19	M6	40	32	4	6	21.5	19	M6	40	32	4	6	21.5
90 L	All	2, 4	78.5	10	14	387	–	–	445	79	24	M8	50	40	5	8	27	19	M6	40	32	4	6	21.5
100 L	All	2, 4, 6, 8	96.5	12	16	430.5	7	32	489	112	28	M10	60	50	5	8	31	24	M8	50	40	5	8	27
112 M	All	2, 4, 6, 8	96	12	16	414	7	32	475	112	28	M10	60	50	5	8	31	24	M8	50	40	5	8	27
132 M	All	2, 4, 6, 8	115.5	12	16	515	8.5	39	585.5	130	38	M12	80	70	5	10	41	28	M10	60	50	5	8	31
160 L	All	2, 4, 6, 8	155	15	19	664	10	45	790	145	42	M16	110	90	10	12	45	42	M16	110	90	10	12	45
180 L	1LE1001 1LE1002	2, 4, 6	151	14.5	19	698	–	–	814	145	48	M16	110	100	5	14	52	48	M16	110	100	5	14	52
200 L	1LE1001 1LE1002	2, 4, 6	178	18.5	25	746	–	–	860	185	55	M20	110	100	5	16	59	55	M20	110	100	5	16	59

[1] The length is specified as far as the tip of the fan cover.

© Siemens AG 2018

Dimensional drawings

Type of construction IM B3

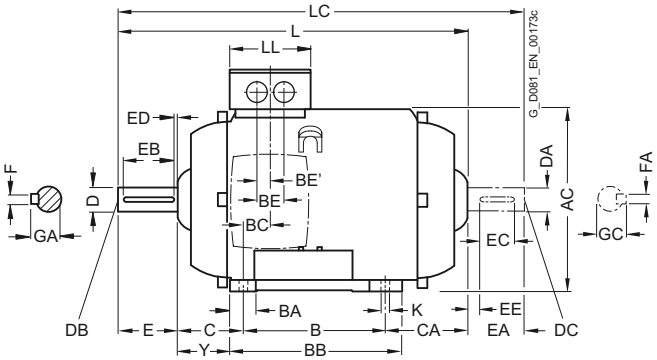

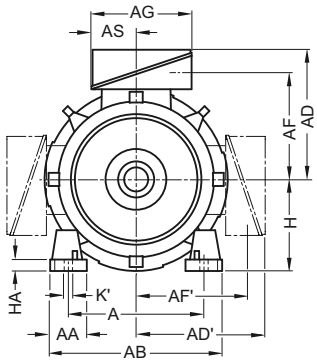

Lifting eyes from frame size 100 L

Only cast housing feet for frame sizes 132 S/M and 160 L/M each have 2 holes at NDE.

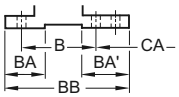

Types of construction IM B5 and IM V1

For flange dimensions, see page 1/53 (**Z** = the number of retaining holes)

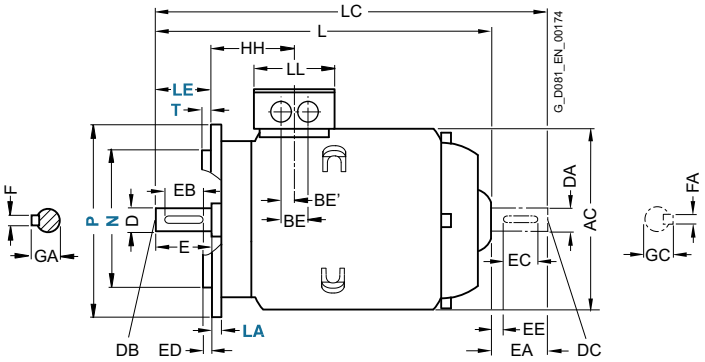

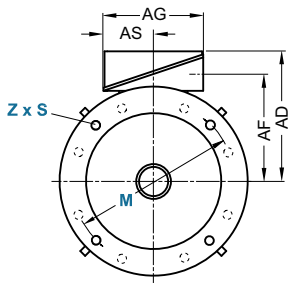

Lifting eyes from frame size 100 L

For motor			Dimension designation acc. to **IEC**																				
Frame size	Motor type 1LE100. 1PC100. 1LE1021	No. of poles	A	AA	AB	AC	AD	AD'	AF	AF'	AG	AS	B	BA	BA'	BB	BC	BE	BE'	C	CA	H	HA	Y
80 M	1LE1001	2, 4, 6	125	30.5	150	159	121.5	121.5	96.5	96.5	93	43	100	32	32	118	23	–	18[5]	50	70.5	80	8	41
	1LE1021	2, 4, 6					149.5	149.5	112.5	112.5	119.5	61.5												
90 S	1LE1001	2, 4, 6	140	30.5	165	178	126	126	101.5	101.5	93	43	100	33	54	143	22.5	–[5]	18[5]	56	103	90	10	47
	1LE1021	2, 4, 6					154.5	154.5	117.5	117.5	119.5	61.5												
90 L	1LE1001	2, 4, 6	140	30.5	165	178	126	126	101.5	101.5	93	43	125	33	54	143	22.5	–[5]	18[5]	56	78	90	10	47
	1LE1021	2, 4, 6					154.5	154.5	117.5	117.5	119.5	61.5												
100 L	All	2, 4, 6, 8	160	42	196	198	166	166	125.5	125.5	135	63.5	140	37.5	37.5	176	33.5	50	25	63	63	100	12	45
112 M	All	2, 4 6, 8	190	46	226	222	177	177	136.5	136.5	135	63.5	140	37.5	37.5	176	26	50	25	70	45 70	112	12	52
132 S	All	2, 4, 6, 8	216	53	256	261	202	202	159.5	159.5	155	70.5	140	38	76[1]	218[2]	26.5	48	24	89	77	132	15	69
132 M	All	2, 4, 6, 8	216	53	256	261	202	202	159.5	159.5	155	70.5	178	38	76	218	26.5	48	24	89	39	132	15	69
160 M	All	2, 4, 6, 8	254	60	300	314	236.5	236.5	190	190	175	77.5	210	44	89[3]	300[4]	47	57	28.5	108	92	160	18	85
160 L	All	2, 4, 6, 8	254	60	300	314	236.5	236.5	190	190	175	77.5	254	44	89	300	47	57	28.5	108	48	160	18	85
180 M	1LE1001 1LE1021	2, 4, 6, 8	279	65	339	356	259	259	212.5	212.5	175	77.5	241	80	100	328	30	57	28.5	121	124	180	20	95
200 L	1LE1001 1LE1021	2, 4, 6, 8	318	70	378	396	296	296	238	238	225	102.5	305	90	100	355	45	75	37.5	133	101	200	25	108

[1] With screwed-on feet, dimension BA' is 38 mm.

[2] With screwed-on feet, dimension BB is 180 mm.

[3] With screwed-on feet, dimension BA' is 44 mm.

[4] With screwed-on feet, dimension BB is 256 mm.

[5] Only one termination hole available, except for 1LE1021. In this case, dimension BE is 32 mm.

© Siemens AG 2018

Dimensional drawings (continued)

Type of construction IM B35

For flange dimensions, see page 1/53 (**Z** = the number of retaining holes)

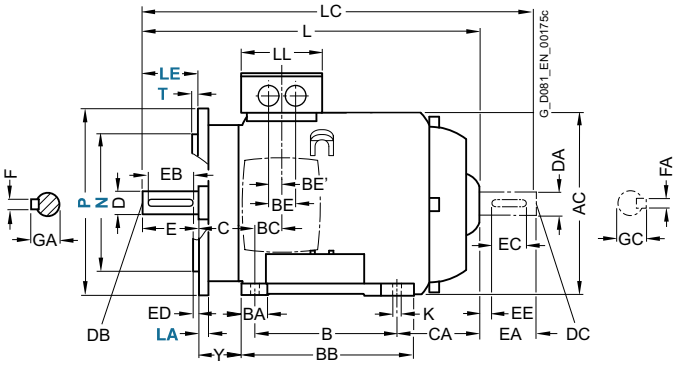

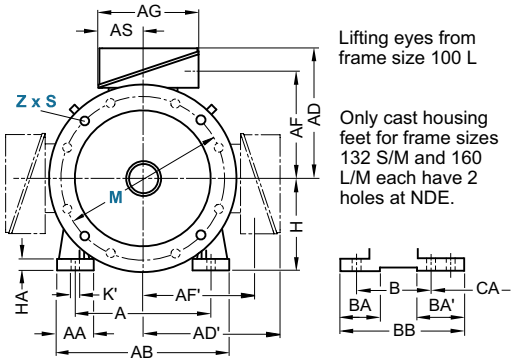

Lifting eyes from frame size 100 L

Only cast housing feet for frame sizes 132 S/M and 160 L/M each have 2 holes at NDE.

Type of construction IM B14

For flange dimensions, see page 1/53 (**Z** = the number of retaining holes)

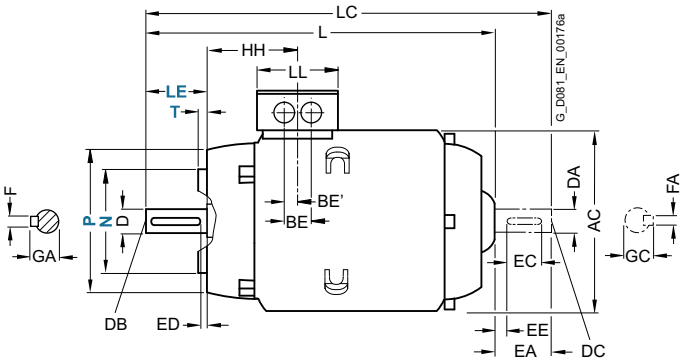

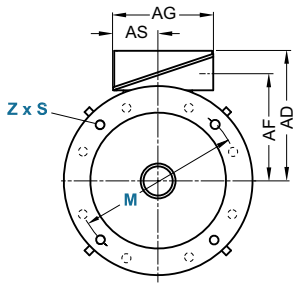

Lifting eyes from frame size 100 L

For motor			Dimension designation acc. to **IEC**						DE shaft extension							NDE shaft extension						
Frame size	Motor type 1LE100. 1PC100. 1LE1021	No. of poles	HH	K	K'	L	LC	LL	D	DB	E	EB	ED	F	GA	DA	DC	EA	EC	EE	FA	GC
80 M	1LE1001	2, 4, 6	73	9.5	13.5	253	300.5	79	19	M6	40	32	4	6	21.5	19	M6	40	32	4	6	21.5
	1LE1021	2, 4, 6						123														
90 S	1LE1021	2, 4, 6	78.5	10	14	294.5	349	79	24	M8	50	40	5	8	27	19	M6	40	32	4	6	21.5
	1LE1021	2, 4, 6						123														
90 L	1LE1021	2, 4, 6	78.5	10	14	294.5	349	123	24	M8	50	40	5	8	27	19	M6	40	32	4	6	21.5
	1LE1021	2, 4, 6						123														
100 L	All	2, 4, 6, 8	96.5	12	16	324	376	112	28	M10	60	50	5	8	31	24	M8	50	40	5	8	27
112 M	All	2, 4 6, 8	96	12	16	311 336	365 390	112	28	M10	60	50	5	8	31	24	M8	50	40	5	8	27
132 S	All	2, 4, 6, 8	115.5	12	16	380.5	446	130	38	M12	80	70	5	10	41	28	M10	60	50	5	8	31
132 M	All	2, 4, 6, 8	115.5	12	16	380.5	446	130	38	M12	80	70	5	10	41	28	M10	60	50	5	8	31
160 M	All	2, 4, 6, 8	155	15	19	510	630	145	42	M16	110	90	10	12	45	42	M16	110	90	10	12	45
160 L	All	2, 4, 6, 8	155	15	19	510	630	145	42	M16	110	90	10	12	45	42	M16	110	90	10	12	45
180 M	1LE1001 1LE1021	2, 4, 6, 8	151	14.5	19	698	706	145	48	M16	110	100	5	14	52	48	M16	110	100	5	14	51.5
200 L	1LE1001 1LE1021	2, 4, 6, 8	178	18.5	25	746	759	185	55	M20	110	100	5	16	59	55	M20	110	100	100	16	59

© Siemens AG 2018

2

Dimensional drawings

Type of construction IM B3

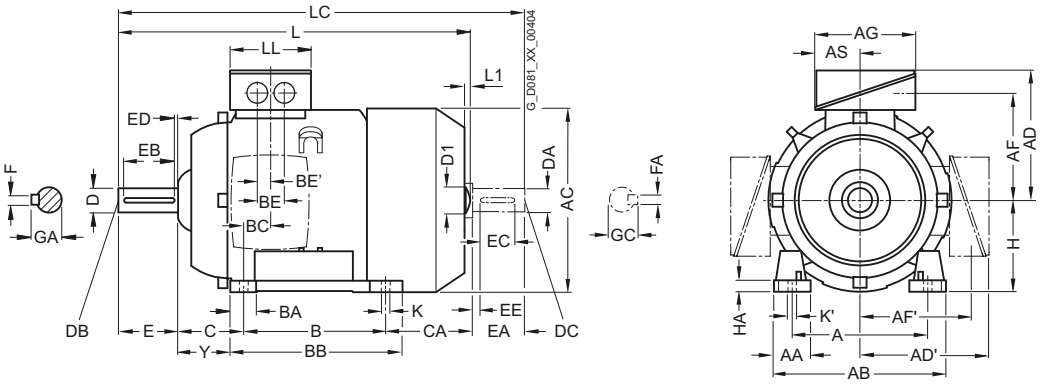

Types of construction IM B5 and IM V1

For flange dimensions, see page 1/53 (**Z** = the number of retaining holes)

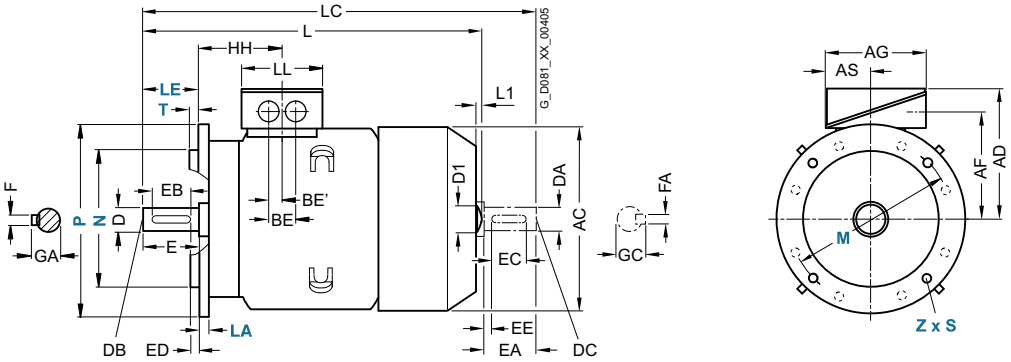

For motor			Dimension designation acc. to **IEC**																			
Frame size	Motor type	No. of poles	A	AA	AB	AC	AD	AD'	AF	AF'	AG	AS	B	BA	BB	BC	BE	BE'	C	CA	H	HA	Y
80 M	1LE1003-0DA2, -0DB2, -0DC2 -0DA3, -0DB3, -0DC3	2, 4, 6	125	30.5	150	159	121.5	121.5	96.5	96.5	93	43	100	32	118	23	–[1]	18[1]	50	113	80	8	41
																				148			
	1LE1043-0DA2,	2																					
	1LE1023-0DA2, -0DB2, -0DC2 -0DA3, -0DB3, -0DC3	2, 4, 6					149.5	149.5	112	112	119.5	61.5								113			
																				148			
90 S	1LE1003-0EA0, -0EB0, -0EC0	2, 4, 6	140	30.5	165	178	126	126	101.5	101.5	93	43	100	33	143	22.5	–[1]	18[1]	56	159	90	10	47
	1LE1043-0EA0,	2																					
	1LE1023-0EA0, -0EB0, -0EC0	2, 4, 6					154.5		117.5	117	119.5	61.5											
90 L	1LE1003-0EA4, -0EB4, -0EC4	2, 4, 6	140	30.5	165	178	126	126	101.5	101.5	93	43	125	33	143	22.5	–[1]	18[1]	56	154	90	10	47
	1LE1043-0EA4, -0EB4	2, 4																					
	1LE1023-0EA4, -0EB4, -0EC4	2, 4, 6					154.5		117.5	117.5	119.5	61.5											

[1] Only one termination hole available, except for 1LE1023. In this case, dimension BE is 32 mm.

© Siemens AG 2018

Dimensional drawings (continued)

Type of construction IM B35

For flange dimensions, see page 1/53 (**Z** = the number of retaining holes)

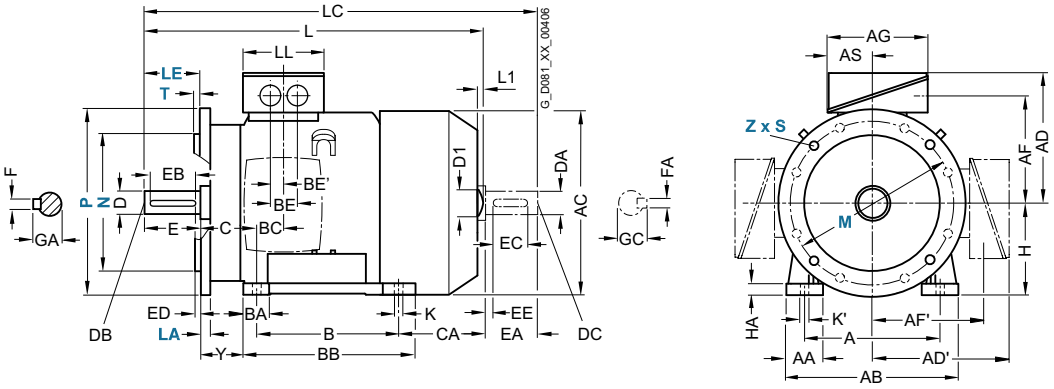

Type of construction IM B14

For flange dimensions, see page 1/53 (**Z** = the number of retaining holes)

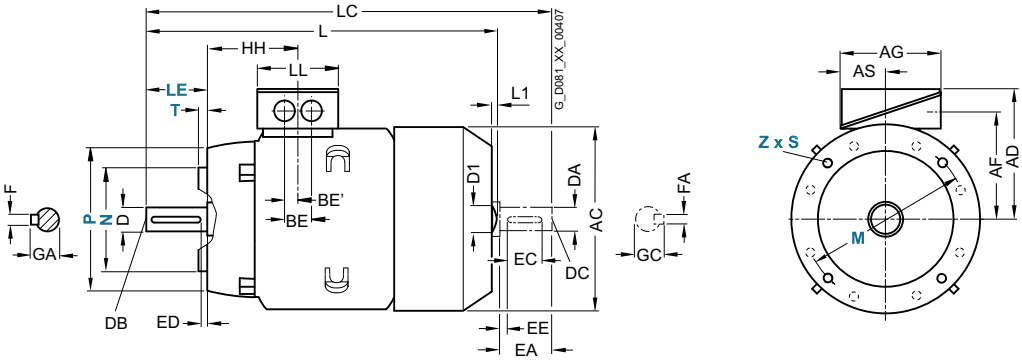

For motor			Dimension designation acc. to **IEC**								DE shaft extension							NDE shaft extension						
Frame size	Motor type	No. of poles	HH	K	K'	L[1)]	L1	D1	LC	LL	D	DB	E	EB	ED	F	GA	DA	DC	EA	EC	EE	FA	GC
80 M	1LE1003-0DA2, -0DB2, -0DC2, -0DA3, -0DB3, -0DC3	2, 4, 6	73	9.5	13.5	292	–	–	343	79	19	M6	40	32	4	6	21.5	19	M6	40	32	4	6	21.5
						327			378															
	1LE1043-0DA2,	2				292																		
	1LE1023-0DA2, -0DB2, -0DC2, -0DA3, -0DB3, -0DC3	2, 4, 6				292			343	123														
						327			378															
90 S	1LE1003-0EA0, -0EB0, -0EC0	2, 4, 6	78.5	10	14	347	–	–	405	79	24	M8	50	40	5	8	27	19	M6	40	32	4	6	21.5
	1LE1043-0EA0,	2																						
	1LE1023-0EA0, -0EB0, -0EC0	2, 4, 6								123														
90 L	1LE1003-0EA4, -0EB4, -0EC4	2, 4, 6	78.5	10	14	387	–	–	445	79	24	M8	50	40	5	8	27	19	M6	40	32	4	6	21.5
	1LE1043-0EA4, -0EB4	2, 4																						
	1LE1023-0EA4, -0EB4, -0EC4	2, 4, 6								123														

[1)] The length is specified as far as the tip of the fan cover.

© Siemens AG 2018

Dimensional drawings

Type of construction IM B3

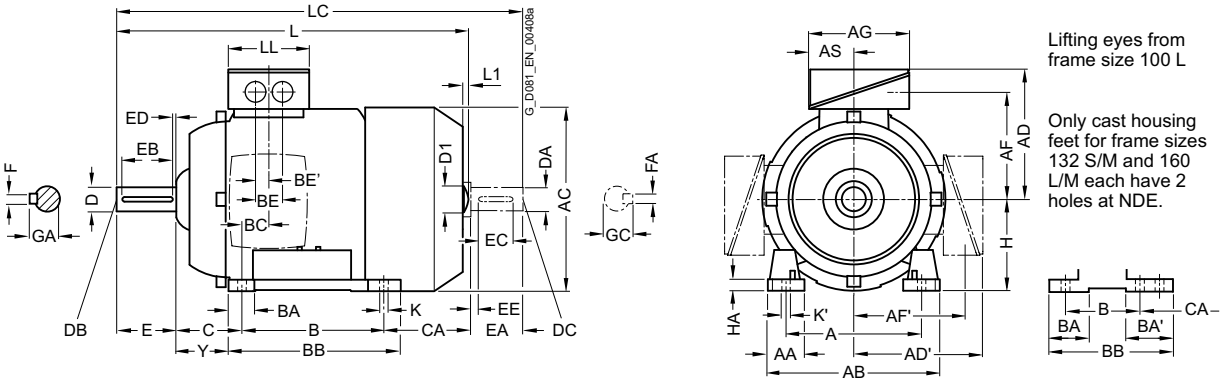

Lifting eyes from frame size 100 L

Only cast housing feet for frame sizes 132 S/M and 160 L/M each have 2 holes at NDE.

Types of construction IM B5 and IM V1

For flange dimensions, see page 1/53 (**Z** = the number of retaining holes)

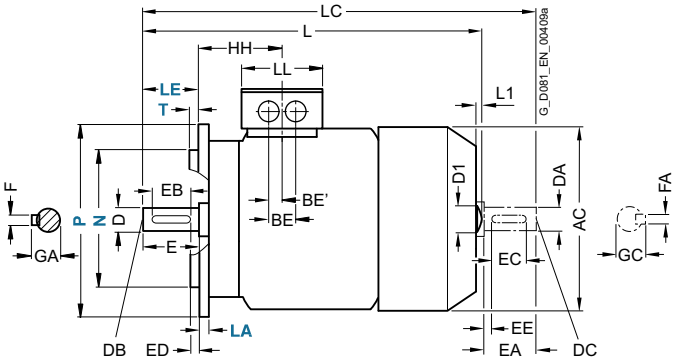

Lifting eyes from frame size 100 L

For motor			Dimension designation acc. to **IEC**																				
Frame size	Motor type 1LE1003- 1LE1023- 1LE1043	No. of poles	A	AA	AB	AC	AD	AD'	AF	AF'	AG	AS	B	BA	BA'	BB	BC	BE	BE'	C	CA	H	HA	Y
100 L	1AA4, 1AB4, 1AB5, 1AC3	2, 4, 6	160	42	196	198	166	166	125.5	125.5	135	63.5	140	37.5	37.5	176	33.5	50	25	63	176	100	12	45
112 M	1BA2, 1BB2	2, 4, 6	190	46	226	222	177	177	136.5	136.5	135	63.5	140	37.5	37.5	176	26	50	25	70	155	112	12	52
132 S	1CA0, 1CC0, 1CD0	2, 6, 8	216	53	256	262	202	202	159.5	159.5	155	70.5	140	38	76[1]	218[2]	26.5	48	24	89	167	132	15	69
	1CA1, 1CB0	2, 4																			217			
132 M	1CC2	6	216	53	256	262	202	202	159.5	159.5	155	70.5	178	38	76	218	26.5	48	24	89	129	132	15	69
	1CB2, 1CC3, 1CD2	4, 6, 8																			179			
160 M	1DA2, 1DA3, 1DB2, 1DC2, 1DD2, 1DD3	2, 4, 6, 8	254	60	300	314	236.5	236.5	190	190	175	77.5	210	44	89[3]	300[4]	47	57	28.5	108	192	160	18	85
160 L	1DA4, 1DB4, 1DC4, 1DD4	2, 4, 6, 8	254	60	300	314	236.5	236.5	190	190	175	77.5	254	44	89	300	47	57	28.5	108	208	160	18	85
180 M	1EA2 1EB2	2, 4	279	65	339	356	259	259	212.5	212.5	175	77.5	241	80	100	328	30	57	28.5	121	232	180	20	95
180 L	1EB4, 1EC4, 1ED4	4, 6, 8	279	65	339	356	259	259	212.5	212.5	175	77.5	279	80	100	328	30	57	28.5	121	194	180	20	95
200 L	2AA4, 2AA5, 2AB5, 2AC4, 2AC5, 2AD5	2, 4, 6, 8	318	70	378	396	296	296	238	238	225	102.5	305	90	100	355	45	75	37.5	133	202	200	25	108

[1] With screwed-on feet, dimension BA' is 38 mm.

[2] With screwed-on feet, dimension BB is 180 mm.

[3] With screwed-on feet, dimension BA' is 44 mm.

[4] With screwed-on feet, dimension BB is 256 mm.

© Siemens AG 2018

Dimensional drawings (continued)

Type of construction IM B35

For flange dimensions, see page 1/53 (**Z** = the number of retaining holes)

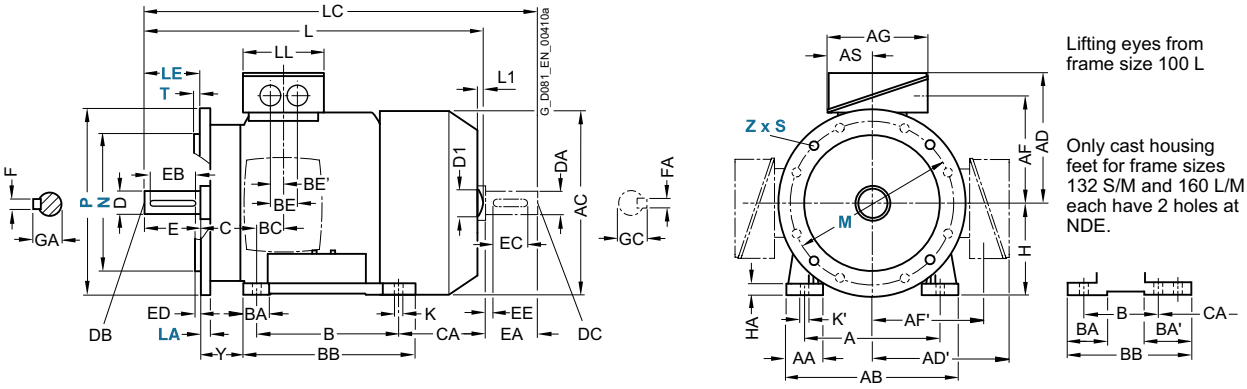

Type of construction IM B14

For flange dimensions, see page 1/53 (**Z** = the number of retaining holes)

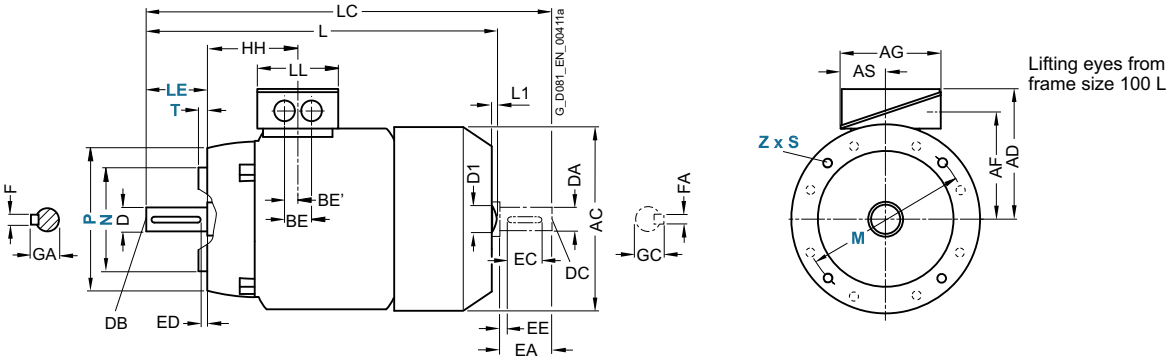

For motor			Dimension designation acc. to **IEC**								DE shaft extension							NDE shaft extension						
Frame size	Motor type 1LE1003- 1LE1023- 1LE1043	No. of poles	HH	K	K'	L[1]	L1	D1	LC	LL	D	DB	E	EB	ED	F	GA	DA	DC	EA	EC	EE	FA	GC
100 L	1AA4, 1AB4, 1AB5, 1AC3	2, 4, 6	96.5	12	16	430.5	7	32	489	112	28	M10	60	50	5	8	31	24	M8	50	40	5	8	27
112 M	1BA2, 1BB2	2, 4, 6	96	12	16	414	7	32	475	112	28	M10	60	50	5	8	31	24	M8	50	40	5	8	27
132 S	1CA0, 1CC0, 1CD0	2, 6, 8	115.5	12	16	465	8.5	39	535.5	130	38	M12	80	70	5	10	41	28	M10	60	50	5	8	31
	1CA1, 1CB0	2, 4				515			585.5															
132 M	1CC2	6	115.5	12	16	465	8.5	39	535.5	130	38	M12	80	70	5	10	41	28	M10	60	50	5	8	31
	1CB2, 1CC3, 1CD2	4, 6, 8				515			585.5															
160 M	1DA2, 1DA3, 1DB2, 1DC2, 1DD2, 1DD3	2, 4, 6, 8	155	15	19	604	10	45	730	145	42	M16	110	90	10	12	45	42	M16	110	90	10	12	45
160 L	1DA4, 1DB4, 1DC4, 1DD4	2, 4, 6, 8	155	15	19	664	10	45	790	145	42	M16	110	90	10	12	45	42	M16	110	90	10	12	45
180 M	1EA2 1EB2	2, 4	151	14.5	19	698	–	–	814	145	48	M16	110	100	5	14	52	48	M16	110	100	5	14	52
180 L	1EB4, 1EC4, 1ED4	4, 6, 8	151	14.5	19	698	–	–	814	145	48	M16	110	100	5	14	52	48	M16	110	100	5	14	52
200 L	2AA4, 2AA5, 2AB5, 2AC4, 2AC5, 2AD5	2, 4, 6, 8	178	18.5	25	746	–	–	860	185	55	M20	110	100	5	16	59	55	M20	110	100	5	16	59

[1] The length is specified as far as the tip of the fan cover.

© Siemens AG 2018

2

Dimensional drawings

Type of construction IM B3

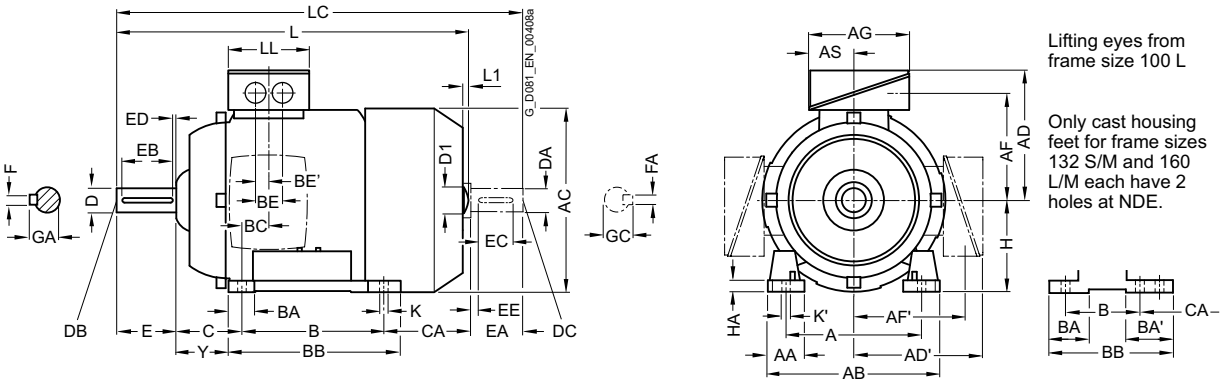

Types of construction IM B5 and IM V1

For flange dimensions, see page 1/53 (**Z** = the number of retaining holes)

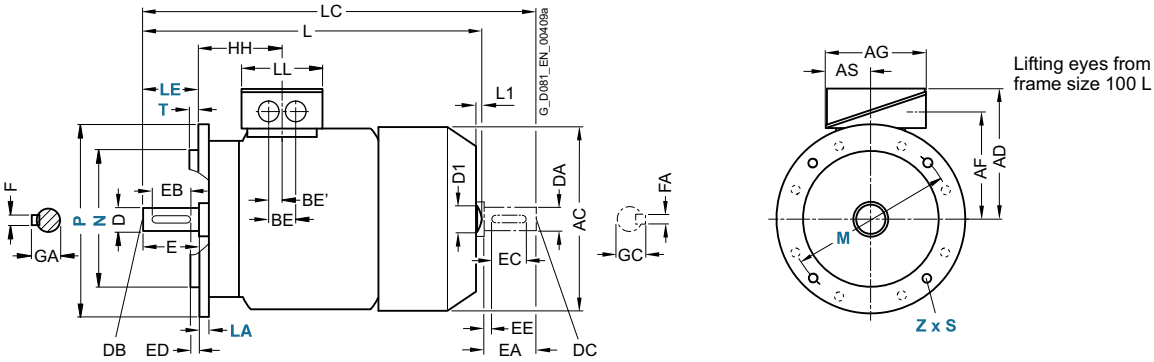

For motor			Dimension designation acc. to **IEC**																				
Frame size	Motor type	No. of poles	A	AA	AB	AC	AD	AD'	AF	AF'	AG	AS	B	BA	BA'	BB	BC	BE	BE'	C	CA	H	HA	Y
132 M	1LE1003-1CA6 1LE1043-1CA6	2	216	53	256	262	202	202	159.5	159.5	155	70.5	178	38	76	218	26.5	48	24	89	179	132	15	69
160 L	1LE1003-1DA6 -1DB6 1LE1043-1DA6	2, 4	254	60	300	314	236.5	236.5	190	190	175	77.5	254	44	89	300	47	57	28.5	108	268	160	18	85
180 L	1LE1003-1EA6 -1EB6 -1EC6	2, 4, 6	279	65	339	356	259	259	212.5	212.5	175	77.5	279	80	100	328	30	57	28.5	121	194	180	20	95
200 L	1LE1003-2AA6 -2AB6 -2AC6	2, 4, 6	318	70	378	396	296	296	238	238	225	102.5	305	90	100	355	45	75	37.5	133	202	200	25	108

© Siemens AG 2018

2

Dimensional drawings (continued)

Type of construction IM B35

For flange dimensions, see page 1/53 (**Z** = the number of retaining holes)

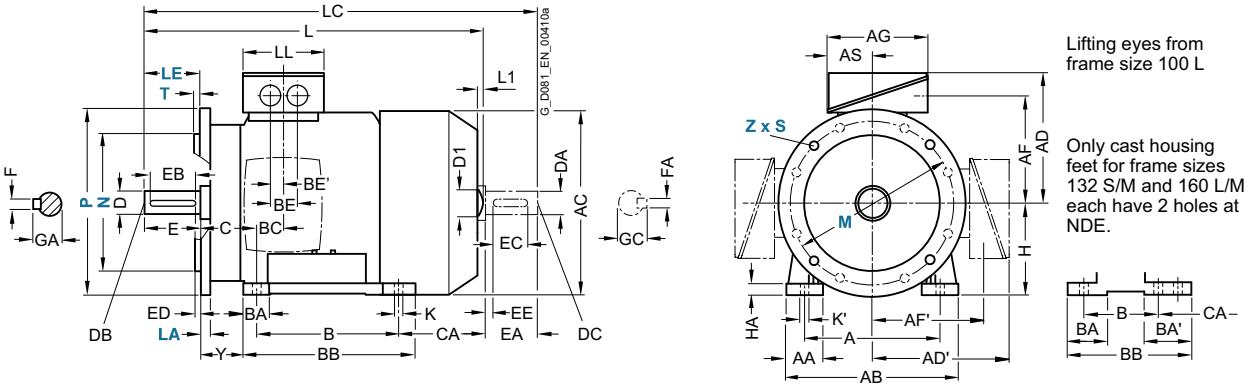

Type of construction IM B14

For flange dimensions, see page 1/53 (**Z** = the number of retaining holes)

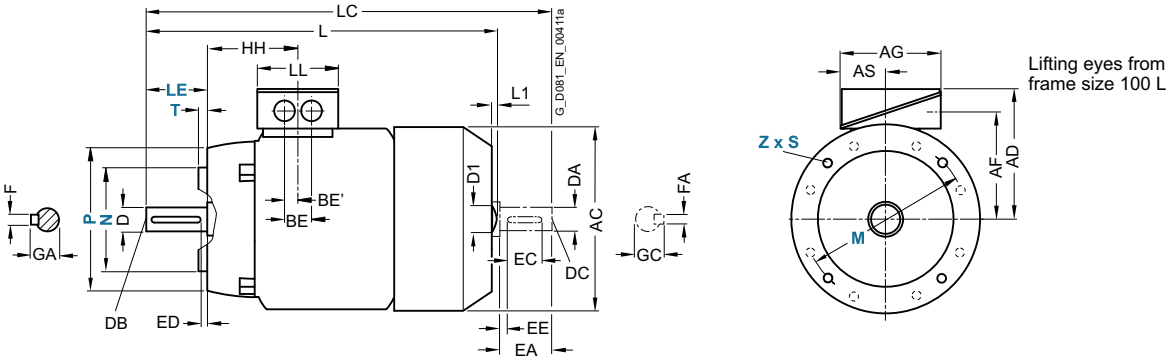

For motor			Dimension designation acc. to **IEC**								DE shaft extension							NDE shaft extension						
Frame size	Motor type	No. of poles	HH	K	K'	L[1)]	L1	D1	LC	LL	D	DB	E	EB	ED	F	GA	DA	DC	EA	EC	EE	FA	GC
132 M	1LE1003-1CA6 1LE1043-1CA6	2	115.5	12	16	515	8.5	39	585.5	130	38	M12	80	70	5	10	41	28	M10	60	50	5	8	31
160 L	1LE1003-1DA6 -1DB6 1LE1043-1DA6	2, 4	155	15	19	664	10	45	790	145	42	M16	110	90	10	12	45	42	M16	110	90	10	12	45
180 L	1LE1003-1EA6 -1EB6 -1EC6	2, 4, 6	151	14.5	19	698	–	–	814	145	48	M16	110	100	5	14	52	48	M16	110	100	5	14	52
200 L	1LE1003-2AA6 -2AB6 -2AC6	2, 4, 6	178	18.5	25	746	–	–	860	185	55	M20	110	100	5	16	59	55	M20	110	100	5	16	59

[1)] The length is specified as far as the tip of the fan cover.

© Siemens AG 2018

Dimensional drawings

Type of construction IM B3

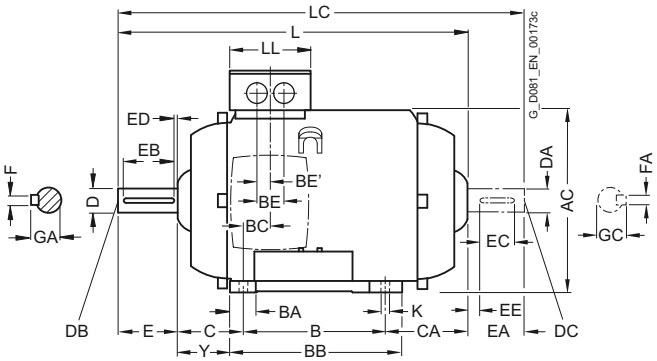

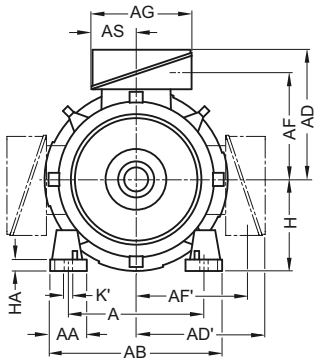

Lifting eyes from frame size 100 L

Only cast housing feet for frame sizes 132 S/M and 160 L/M each have 2 holes at NDE.

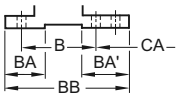

Types of construction IM B5 and IM V1

For flange dimensions, see page 1/53 (**Z** = the number of retaining holes)

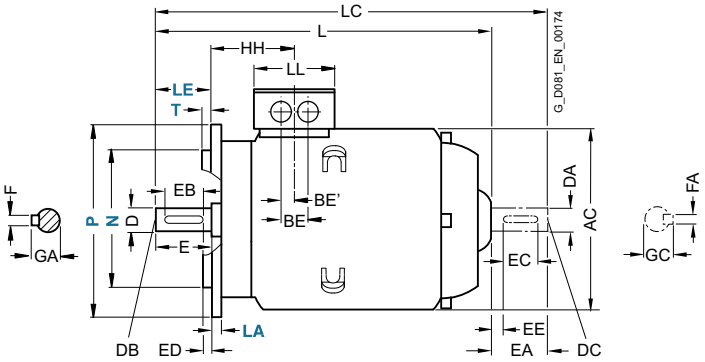

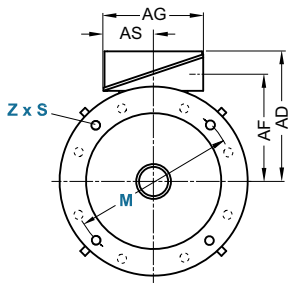

Lifting eyes from frame size 100 L

For motor			Dimension designation acc. to **IEC**																				
Frame size	Motor type 1LE1023-1LE1043-	No. of poles	A	AA	AB	AC	AD	AD'	AF	AF'	AG	AS	B	BA	BA'	BB	BC	BE	BE'	C	CA	H	HA	Y
80 M	0DA2, 0DB2, 0DC2	2, 4, 6	125	30.5	150	159	121.5	121.5	96.5	96.5	93	43	100	32	32	118	23	–	18[1)]	50	70	80	8	41
	0DA3, 0DB3, 0DC3	2, 4, 6																			105.5			
90 S	0EA0, 0EB0, 0EC0	2, 4, 6	140	30.5	165	178	126	126	101.5	101.5	93	43	100	33	54	143	22.5	–	18[1)]	56	113	90	10	47
90 L	0EA4, 0EB4, 0EC4	2, 4, 6	140	30.5	165	178	126	126	101.5	101.5	93	43	100	33	54	143	22.5	–	18[1)]	56	153	90	10	47

[1)] Only one termination hole available.

© Siemens AG 2018

Dimensional drawings (continued)

Type of construction IM B35

For flange dimensions, see page 1/53 (**Z** = the number of retaining holes)

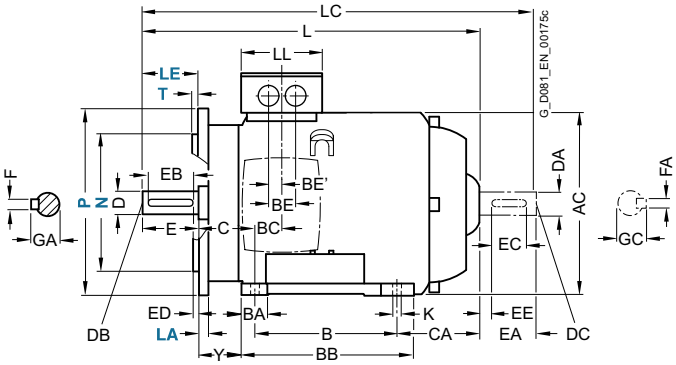

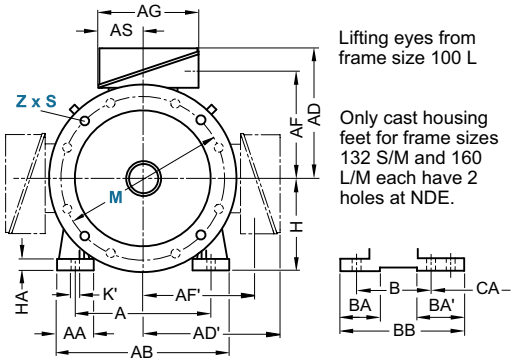

Lifting eyes from frame size 100 L

Only cast housing feet for frame sizes 132 S/M and 160 L/M each have 2 holes at NDE.

Type of construction IM B14

For flange dimensions, see page 1/53 (**Z** = the number of retaining holes)

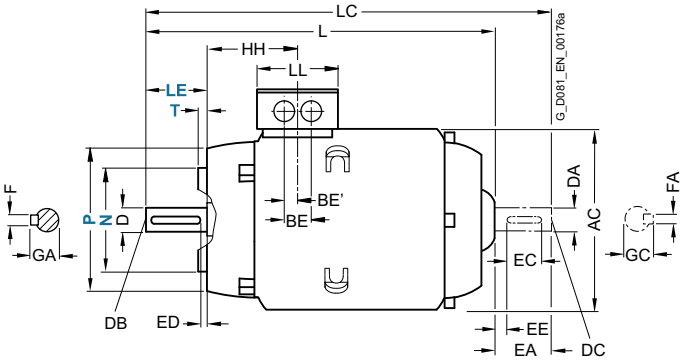

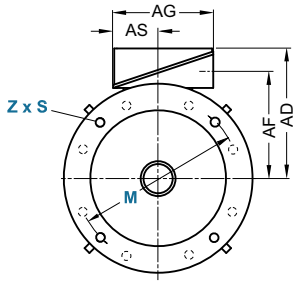

Lifting eyes from frame size 100 L

For motor			Dimension designation acc. to **IEC**						DE shaft extension							NDE shaft extension						
Frame size	Motor type 1LE1023-1LE1043-	No. of poles	HH	K	K'	L	LC	LL	D	DB	E	EB	ED	F	GA	DA	DC	EA	EC	EE	FA	GC
80 M	0DA2, 0DB2, 0DC2	2, 4, 6	73	9.5	13.5	253.5	300.5	79	19	M6	40	32	4	6	21.5	19	M6	40	32	4	6	21.5
	0DA3, 0DB3, 0DC3	2, 4, 6				288	335.5															
90 S	0EA0, 0EB0, 0EC0	2, 4, 6	78.5	10	14	294.5	349	79	19	M6	40	32	5	8	27	19	M6	40	32	4	6	21.5
90 L	0EA4, 0EB4, 0EC4	2, 4, 6	78.5	10	14	334.5	389	79	19	M6	40	32	5	8	27	19	M6	40	32	4	6	21.5

© Siemens AG 2018

2

Dimensional drawings

Type of construction IM B3

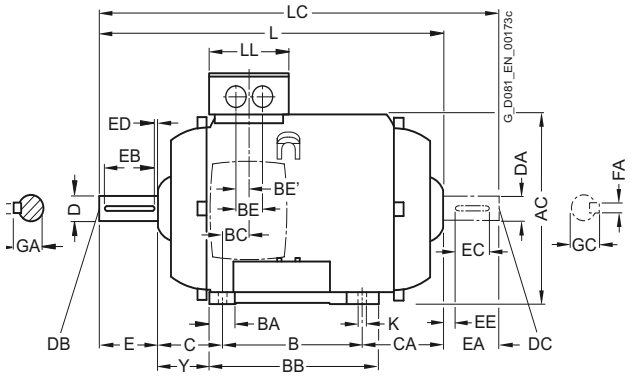

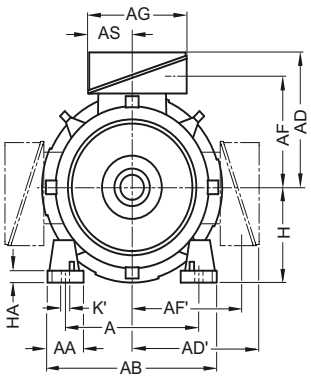

Lifting eyes from frame size 100 L

Only cast housing feet for frame sizes 132 S/M and 160 L/M each have 2 holes at NDE.

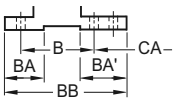

Types of construction IM B5 and IM V1

For flange dimensions, see page 1/53 (**Z** = the number of retaining holes)

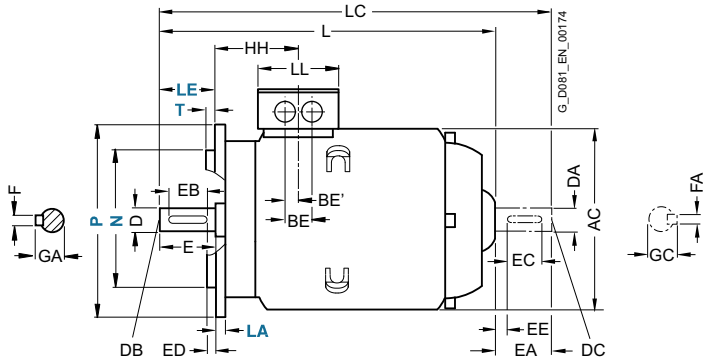

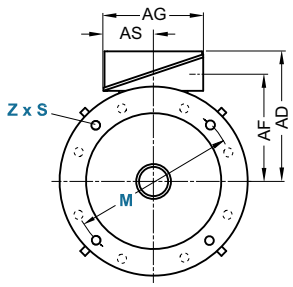

Lifting eyes from frame size 100 L

For motor			Dimension designation acc. to **IEC**																				
Frame size	Motor type 1LE1023- 1LE1043-	No. of poles	A	AA	AB	AC	AD	AD'	AF	AF'	AG	AS	B	BA	BA'	BB	BC	BE	BE'	C	CA	H	HA	Y
100 L	1AA4, 1AB4, 1AB5 1AC3	2, 4 6	160	42	196	198	166	166	125.5	125.5	135	63.5	140	37.5	37.5	176	33.5	50	25	63	–	100	12	45
112 M	1BA2, 1BB2	2, 4	190	46	226	222	177	177	136.5	136.5	135	63.5	140	37.5	37.5	176	26	50	25	70	–	112	12	52
132 S	1CA0, 1CC0 1CA1, 1CB0	2, 6 2, 4	216	53	256	262	202	202	159.5	159.5	155	70.5	140	38	76[1]	218[2]	26.5	48	24	89	–	132	15	69
132 M	1CC2 1CB2, 1CC3	6 4, 6	216	53	256	262	202	202	159.5	159.5	155	70.5	178	38	76	218	26.5	48	24	89	–	132	15	69
160 M	1DA2, 1DA3, 1DB2, 1DC2	2, 4, 6	254	60	300	314	236.5	236.5	190	190	175	77.5	210	44	89[3]	300[4]	47	57	28.5	108	–	160	18	85
160 L	1DA4, 1DB4, 1DC4	2, 4, 6	254	60	300	314	236.5	236.5	190	190	175	77.5	254	44	89	300	47	57	28.5	108	–	160	18	85
180 M	1EA2, 1EB2,	2, 4	279	65	339	356	259	259	212.5	212.5	175	77.5	241	80	100	328	30	57	28.5	121	–	180	20	95
180 L	1EB4, 1EC4	4, 6	279	65	339	356	259	259	212.5	212.5	175	77.5	279	80	100	328	30	57	28.5	121	–	180	20	95
200 L	2AA4, 2AA5, 2AB5, 2AC4, 2AC5	2, 4, 6	318	70	378	396	296	296	238	238	225	102.5	305	90	100	355	45	75	37.5	133	–	200	25	108

[1] With screwed-on feet, dimension BA' is 38 mm.
[2] With screwed-on feet, dimension BB is 180 mm.
[3] With screwed-on feet, dimension BA' is 44 mm.
[4] With screwed-on feet, dimension BB is 256 mm.

© Siemens AG 2018

Dimensional drawings (continued)

Type of construction IM B35

For flange dimensions, see page 1/53 (**Z** = the number of retaining holes)

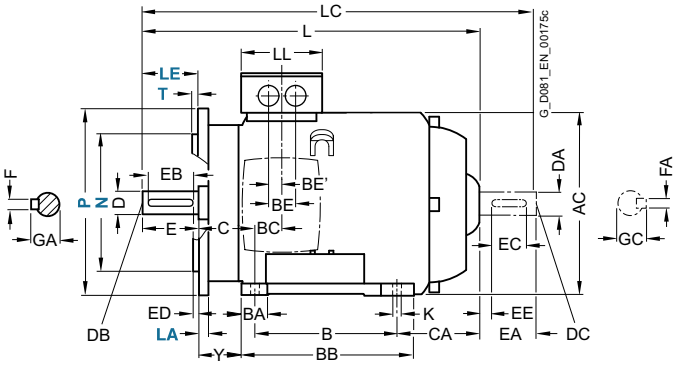

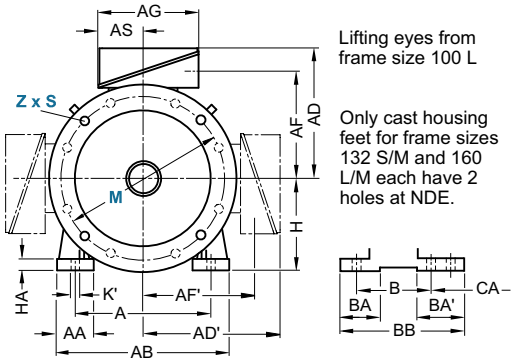

Lifting eyes from frame size 100 L

Only cast housing feet for frame sizes 132 S/M and 160 L/M each have 2 holes at NDE.

Type of construction IM B14

For flange dimensions, see page 1/53 (**Z** = the number of retaining holes)

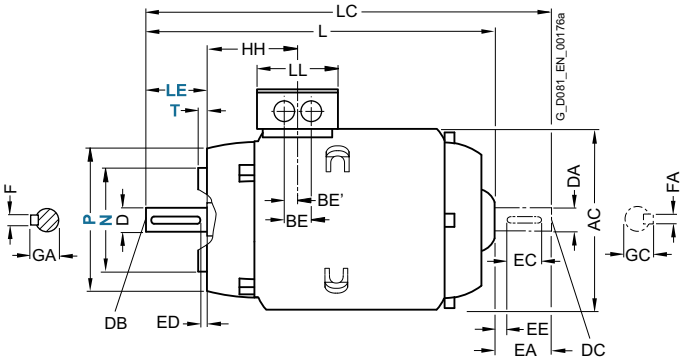

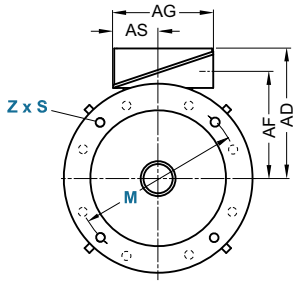

Lifting eyes from frame size 100 L

For motor			Dimension designation acc. to **IEC**						DE shaft extension							NDE shaft extension						
Frame size	Motor type 1LE1023- 1LE1043-	No. of poles	HH	K	K'	L	LC	LL	D	DB	E	EB	ED	F	GA	DA	DC	EA	EC	EE	FA	GC
100 L	1AA4, 1AB4, 1AB5 1AC3	2, 4 6	96.5	12	16	356.5	411	112	28	M10	60	50	5	8	31	24	M8	50	40	5	8	27
112 M	1BA2, 1BB2	2, 4	96	12	16	336	390	112	28	M10	60	50	5	8	31	24	M8	50	40	5	8	27
132 S	1CA0, 1CC0	2, 6	115.5	12	16	380.5	446	130	38	M12	80	70	5	10	41	28	M10	60	50	5	8	31
	1CA1, 1CB0	2, 4				430.5	496									–	–	–	–	–	–	–
132 M	1CC2	6	115.5	12	16	380.5	446	130	38	M12	80	70	5	10	41	28	M10	60	50	5	8	31
	1CB2, 1CC3	4, 6				430.5	496									–	–	–	–	–	–	–
160 M	1DA2, 1DA3, 1DB2, 1DC2	2, 4, 6	155	15	19	510	630	145	42	M16	110	90	10	12	45	42	M16	110	90	10	12	45
160 L	1DA4, 1DB4, 1DC4	2, 4, 6	155	15	19	570	690	145	42	M16	110	90	10	12	45	42	M16	110	90	10	12	45
180 M	1EA2, 1EB2	2, 4	151	14.5	19	698	706	145	48	M16	110	100	5	14	52	48	M16	110	100	5	14	52
180 L	1EB4, 1EC4	4, 6	151	14.5	19	698	706	145	48	M16	110	100	5	14	52	48	M16	110	100	5	14	52
200 L	2AA4, 2AA5, 2AB5, 2AC4, 2AC5	2, 4, 6	178	18.5	25	746	759	185	55	M20	110	100	5	16	59	55	M20	110	100	5	16	59

© Siemens AG 2018

Dimensional drawings

Type of construction IM B3

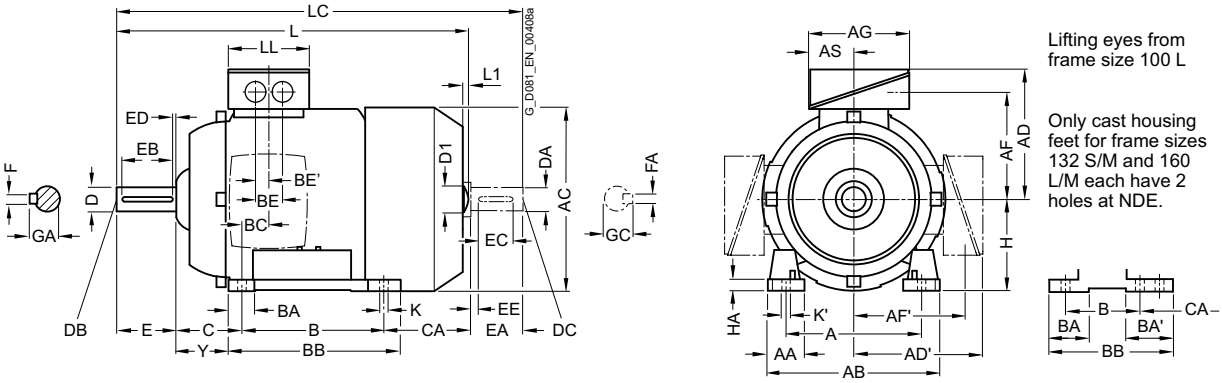

Types of construction IM B5 and IM V1

For flange dimensions, see page 1/53 (**Z** = the number of retaining holes)

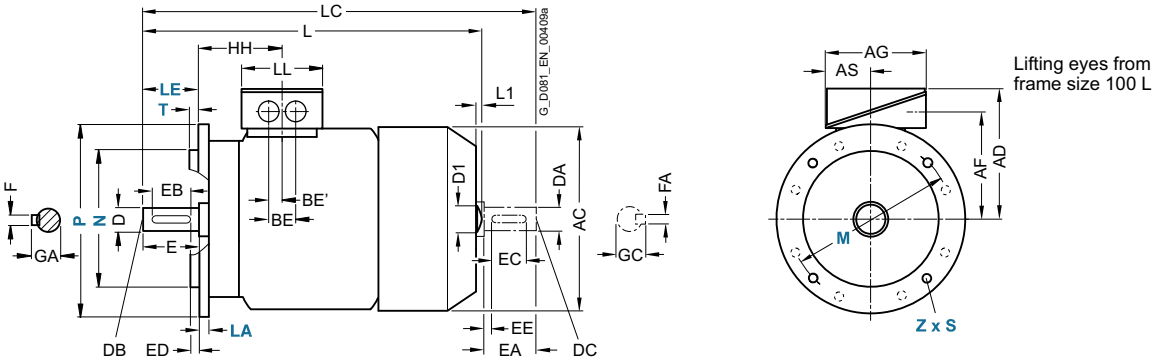

For motor			Dimension designation acc. to **IEC**																				
Frame size	Motor type 1LE1004-	No. of poles	A	AA	AB	AC	AD	AD'	AF	AF'	AG	AS	B	BA	BA'	BB	BC	BE	BE'	C	CA	H	HA	Y
100 L	1AA4 1AB4 1AB5	2 4 4	160	42	196	198	166	166	125.5	125.5	135	63.5	140	37.5	37.5	176	33.5	50	25	63	176	100	12	45
112 M	1BA2 1BB2	2 4	190	46	226	222	177	177	136.5	136.5	135	63.5	140	37.5	37.5	176	26	50	25	70	155	112	12	52
132 S	1CA0 1CA1 1CB0	2 2 4	216	53	256	262	202	202	159.5	159.5	155	70.5	140	38	76[1] –	218[2]	26.5	48	24	89	128.5 178.5	132	15	69
132 M	1CB2	4	216	53	256	262	202	202	159.5	159.5	155	70.5	178	38	76	218	26.5	48	24	89	178.5	132	15	69
160 M	1DA2 1DA3 1DB2	2 2 4	254	60	300	314	236.5	236.5	190	190	175	77.5	210	44	89[3]	300[4]	47	57	28.5	108	148[5]	160	18	85
160 L	1DA4 1DB4	2 4	254	60	300	314	236.5	236.5	190	190	175	77.5	254	44	89	300	47	57	28.5	108	208	160	18	85

[1] With screwed-on feet, dimension BA' is 38 mm.
[2] With screwed-on feet, dimension BB is 180 mm.
[3] With screwed-on feet, dimension BA' is 44 mm.
[4] With screwed-on feet, dimension BB is 256 mm.
[5] With screwed-on feet, dimension CA is 192 mm.

© Siemens AG 2018

Dimensional drawings (continued)

Type of construction IM B35

For flange dimensions, see page 1/53 (**Z** = the number of retaining holes)

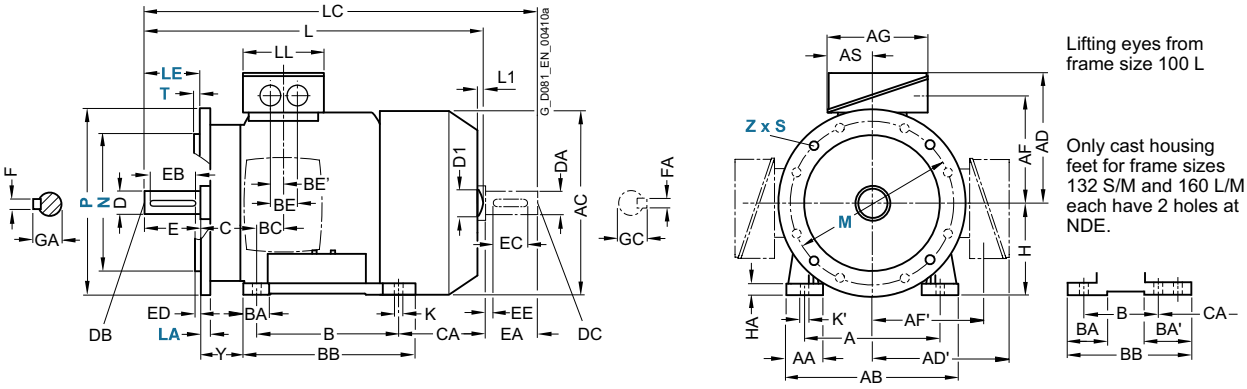

Type of construction IM B14

For flange dimensions, see page 1/53 (**Z** = the number of retaining holes)

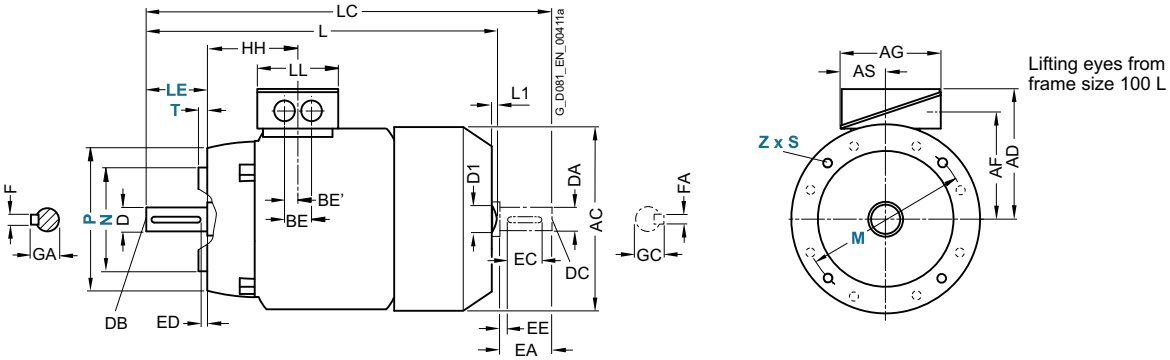

For motor			Dimension designation acc. to **IEC**								DE shaft extension							NDE shaft extension						
Frame size	Motor type 1LE1004-	No. of poles	HH	K	K'	L[1)]	L1	D1	LC	LL	D	DB	E	EB	ED	F	GA	DA	DC	EA	EC	EE	FA	GC
100 L	1AA4 1AB4 1AB5	2 4 4	96.5	12	16	430.5 480.5	7	32	489 529	112	28	M10	60	50	5	8	31	24	M8	50	40	5	8	27
112 M	1BA2 1BB2	2 4	96	12	16	414 464	7	32	475 520	112	28	M10	60	50	5	8	31	24	M8	50	40	5	8	27
132 S	1CA0 1CA1 1CB0	2 2 4	115.5	12	16	465 515	8.5	39	535.5 585.5	130	38	M12	80	70	5	10	41	28	M10	60	50	5	8	31
132 M	1CB2	4	115.5	12	16	515	8.5	39	585.5	130	38	M12	80	70	5	10	41	28	M10	60	50	5	8	31
160 M	1DA2 1DA3 1DB2	2 2 4	155	15	19	604 664	10	45	730	145	42	M16	110	90	10	12	45	42	M16	110	90	10	12	45
160 L	1DA4 1DB4	2 4	155	15	19	664	10	45	790	145	42	M16	110	90	10	12	45	42	M16	110	90	10	12	45

[1)] The length is specified as far as the tip of the fan cover.

© Siemens AG 2018

Dimensional drawings

Type of construction IM B3

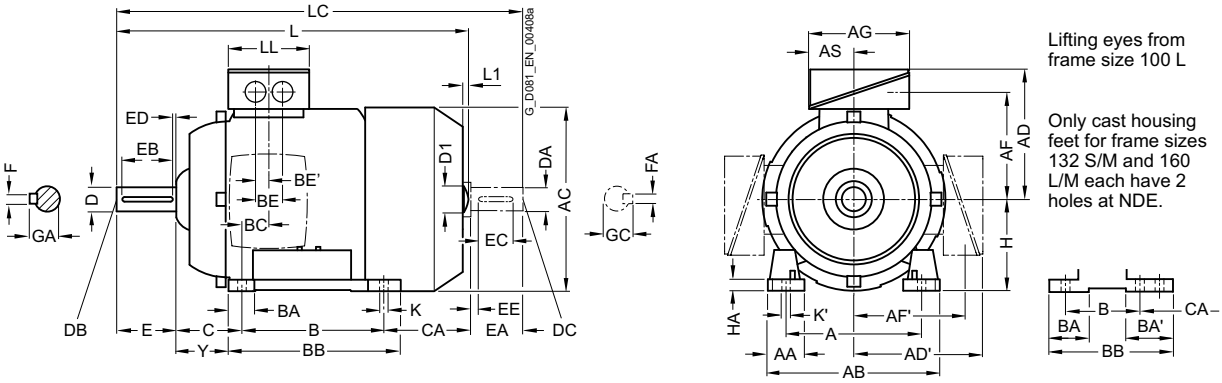

Types of construction IM B5 and IM V1

For flange dimensions, see page 1/53 (**Z** = the number of retaining holes)

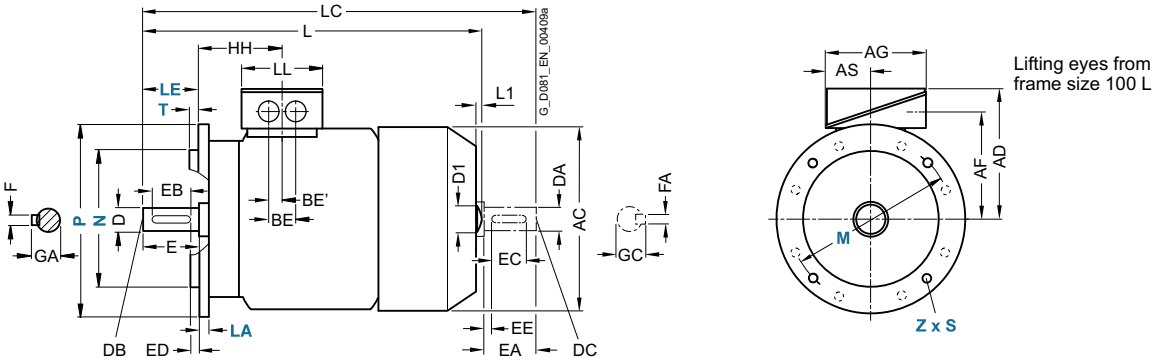

For motor			Dimension designation acc. to **IEC**																					
Frame size	Motor type 1LE15.1, 1LE16.1 1LE1502	No. of poles	A	AA	AB	AC	AD	AD'	AF	AF'	AG	AS	B	BA	BA'	BB	BC	BE	BE'	C	CA	H	HA	Y
71 M	1LE15.1	2, 4, 6	112	30.5	132	145	149	149	112	112	126	62	90	32	32	106	21	36	18	45	83	71	7	37
80 M	1LE15.1	2, 4, 6	125	30.5	150	162	159	159	122	122	126	62	100	32	32	118	22.5	36	18	50	112.5	80	8	41
90 S	1LE15.1	2, 4, 6	140	30.5	165	180	164	164	127	127	126	62	100	33	54	143	24.5	36	18	56	159	90	11	47
90 L	1LE15.1	2, 4, 6	140	30.5	165	180	164	164	127	127	126	62	125	33	54	143	24.5	36	18	56	134	90	11	47
100 L	All	2, 4, 6, 8	160	42	196	217	193	193	147	147	163	80.5	140	48	48	176	37.5	48	24	63	141	100	12	45
112 M	All	2, 4, 6 8	190	46	226	239	195	195	150	150	163	80.5	140	48	48	176	30	48	24	70	130 155	112	12	52
132 S	All	2, 4, 6, 8	216	53	256	281	214.5	214.5	169	169	163	80.5	140	52[5]	89[1]	218[3]	26.5	48	24	89	166.5	132	15	69
132 M	All	2, 4, 6, 8	216	53	256	281	214.5	214.5	169	169	163	80.5	178	52[5]	89[1]	218	26.5	48	24	89	128.5	132	15	69
160 M	All	2, 4, 6, 8	254	60	300	333.5	265	265	213	213	190	92	210	73[6]	117[2]	300[4]	37	60	30	108	192	160	18	85
160 L	All	2, 4, 6, 8	254	60	300	333.5	265	265	213	213	190	92	254	73[6]	117[2]	300	37	60	30	108	148	160	18	85

[1] With screwed-on feet, dimension BA' is 41 mm.
[2] With screwed-on feet, dimension BA' is 51 mm.
[3] With screwed-on feet, dimension BB is 180 mm.
[4] With screwed-on feet, dimension BB is 256 mm.
[5] With screwed-on feet, dimension BA is 41 mm.
[6] With screwed-on feet, dimension BA is 51 mm.

© Siemens AG 2018

2

Dimensional drawings (continued)

Type of construction IM B35

For flange dimensions, see page 1/53 (**Z** = the number of retaining holes)

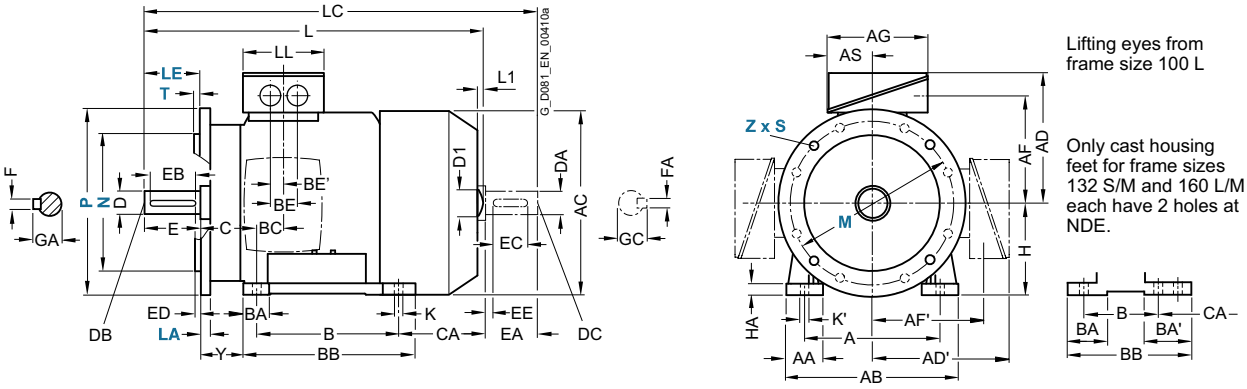

Type of construction IM B14

For flange dimensions, see page 1/53 (**Z** = the number of retaining holes)

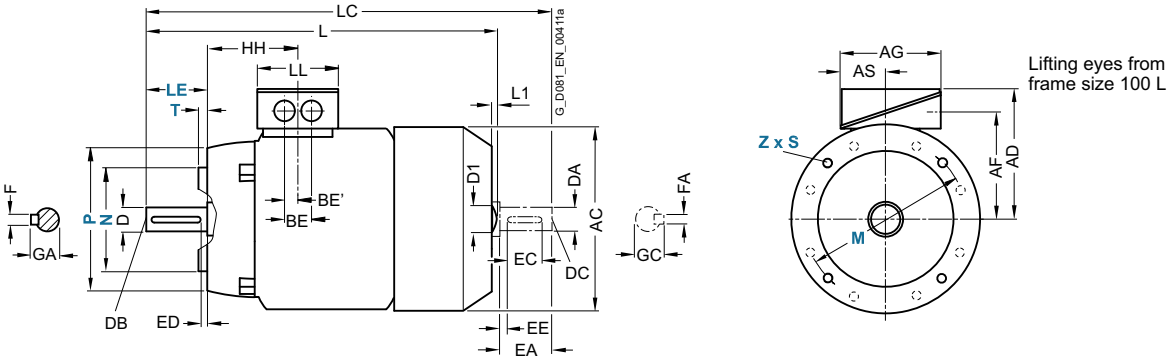

For motor			Dimension designation acc. to **IEC**								DE shaft extension							NDE shaft extension						
Frame size	Motor type 1LE15.1, 1LE16.1 1LE1502	No. of poles	HH	K	K'	L[1]	L1[2]	D1	LC	LL	D	DB	E	EB	ED	F	GA	DA	DC	EA	EC	EE	FA	GC
71 M	1LE15.1	2, 4, 6	64.5	7.5	7.5	240	–	–	278	102	14	M5	30	22	4	5	16	14	M5	30	22	4	5	16
80 M	1LE15.1	2, 4, 6	71.5	10	10	292	–	–	342.5	102	19	M6	40	32	4	6	21.5	19	M6	40	32	4	6	21.5
90 S	1LE15.1	2, 4, 6	79.5	10	10	347	–	–	405	102	24	M8	50	40	5	8	27	19	M6	40	32	4	6	21.5
90 L	1LE15.1	2, 4, 6	79.5	10	10	347	–	–	405	102	24	M8	50	40	5	8	27	19	M6	40	32	4	6	21.5
100 L	All	2, 4, 6, 8	100.5	12	16	397.5	7	32	454	134	28	M10	60	50	5	8	31	24	M8	50	40	5	8	27
112 M	All	2, 4, 6 8	100.5	12	16	390.5 415.5	7	32	450 475	134	28	M10	60	50	5	8	31	24	M8	50	40	5	8	27
132 S	All	2, 4, 6, 8	115.5	12	16	466.5	8.5	39	535.5	134	38	M12	80	70	5	10	41	28	M10	60	50	5	8	31
132 M	All	2, 4, 6, 8	115.5	12	16	466.5	8.5	39	535.5	134	38	M12	80	70	5	10	41	28	M10	60	50	5	8	31
160 M	All	2, 4, 6, 8	145	14.5	18	606	10	45	730	165	42	M16	110	90	10	12	45	42	M16	110	90	10	12	45
160 L	All	2, 4, 6, 8	145	14.5	18	606	10	45	730	165	42	M16	110	90	10	12	45	42	M16	110	90	10	12	45

[1] For 1LE16 motors less dimension L1.

[2] Only for 1LE15 motors.

© Siemens AG 2018

Dimensional drawings

Type of construction IM B3

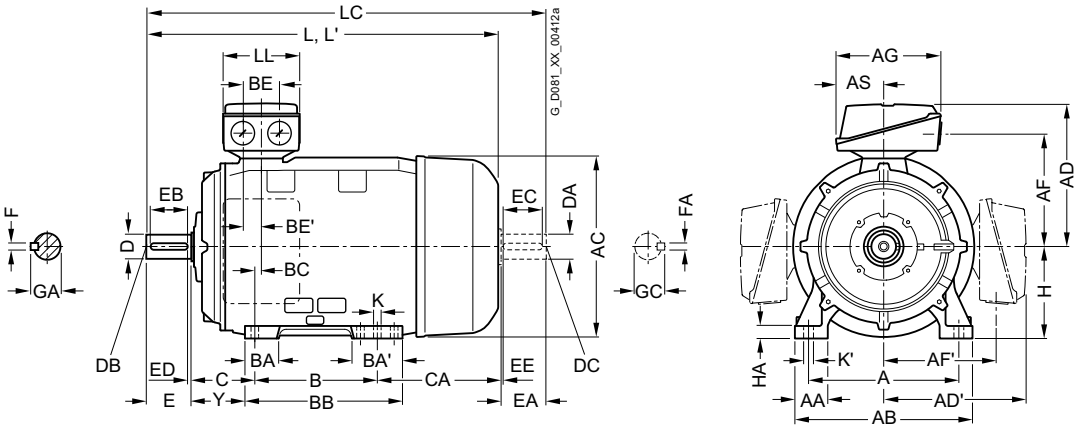

Types of construction IM B5 and IM V1

For flange dimensions, see page 1/53 (**Z** = the number of retaining holes)

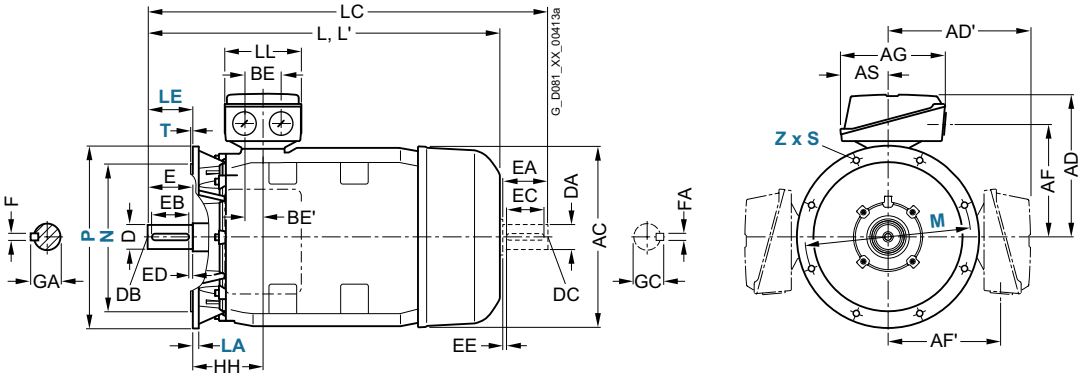

For motor			Dimension designation acc. to **IEC**																	
Frame size	Motor type 1LE1501-, 1LE1521-, 1LE1541- 1LE1601- 1LE1502-	No. of poles	A	AA	AB	AC	AD	AD'	AF	AF'	AG	AS	B	BA	BA'	BB	BC	BE	BE'	C	CA
180 M/ 180 L	1EB2[1], 1EA2, 1EB2, 1EC4	2, 4, 6	279	65	339	356	286	286	234	234	189	91	241	85	120	328	34	60	30	121	202
	1EB4, 1EA6, 1EB6, 1EC6	2, 4, 6											279								
200 L	2AA4, 2AA5, 2AB5, 2AC4, 2AC5, 2AD5	2, 4, 6, 8	318	70	378	396	315	315	258.5	258.5	265	112	305	104	104	355	31	85	42.5	133	177
	2AA6, 2AB6, 2AC6, 2AD6	2, 4, 6, 8																			
225 S/ 225 M	2BB0, 2BD0,	4, 8	356	80	436	449	338	338	282	282	266	112	311	92	117	361	15	85	42.5	149	253
	2BB2, 2BC2, 2BD2, 2BB6, 2BC6, 2BD6	4, 6, 8											286[1]								
	2BA2, 2BA6	2											286[1]								
250 M	2CA2, 2CA6	2	406	100	490	497	410	410	322	322	319	145	349	102	102	409	24	110	55	168	230
	2CB2, 2CC2, 2CD2, 2CC6, 2CD6,	4, 6, 8																			
	2CB6	4																			300

[1] Only applicable for 1LE1502.

© Siemens AG 2018

Dimensional drawings (continued)

Type of construction IM B35

For flange dimensions, see page 1/53 (**Z** = the number of retaining holes)

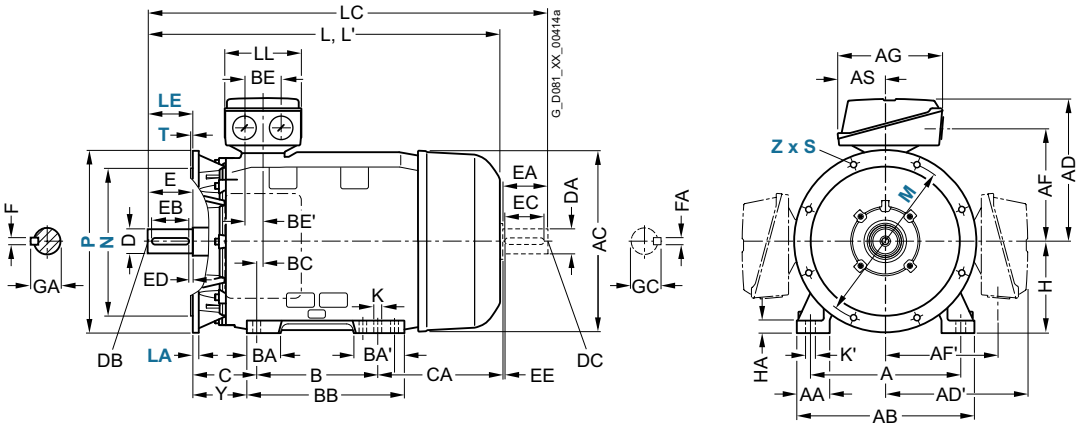

For motor	Dimension designation acc. to **IEC**									DE shaft extension							NDE shaft extension						
Motor type 1LE1501-, 1LE1521-, 1LE1541-1LE1601-1LE1502-	H	HA	Y	HH	K	K'	L	LC[1]	LL	D	DB	E	EB	ED	F	GA	DA	DC	EA	EC	EE	FA	GC
1EB2[2], 1EA2, 1EB2, 1EC4	180	20	95	155	15	19	668	784	164	48	M16	110	100	5	14	51.5	48	M16	110	100	5	14	51.5
1EB4, 1EA6, 1EB6, 1EC6							698	814															
2AA4, 2AA5, 2AB5, 2AC4, 2AC5, 2AD5	200	25	108	164	19	25	721	835	197	55	M20	110	100	5	16	59	55	M20	110	100	5	16	59
2AA6, 2AB6, 2AC6, 2AD6							746	860															
2BB0, 2BD0	225	34	124	164	19	25	788	903	197	60	M20	140	125	10	18	64	55	M20	110	100	5	16	59
2BB2, 2BC2, 2BD2, 2BB6, 2BC6, 2BD6							848	963															
2BA2, 2BA6							818	933		55		110	100	5	16	59	48	M16				14	51.5
2CA2, 2CA6	250	40	138	192	24	30	887	1002	233	60	M20	140	125	10	18	64	55	M20	110	100	5	16	59
2CB2, 2CC2, 2CD2, 2CC6, 2CD6								1032		65						69	60		140	125	10	18	64
2CB6							957	1072															

[1] In the low-noise version, a second shaft extension and/or mounted encoder is not possible.

[2] Only applicable for 1LE1502.

© Siemens AG 2018

Dimensional drawings

Type of construction IM B3

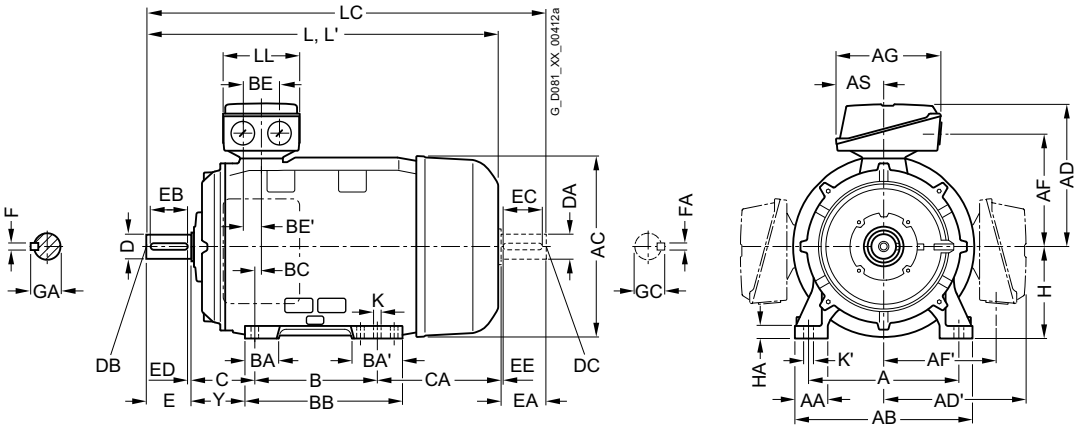

Types of construction IM B5 and IM V1

For flange dimensions, see page 1/53 (**Z** = the number of retaining holes)

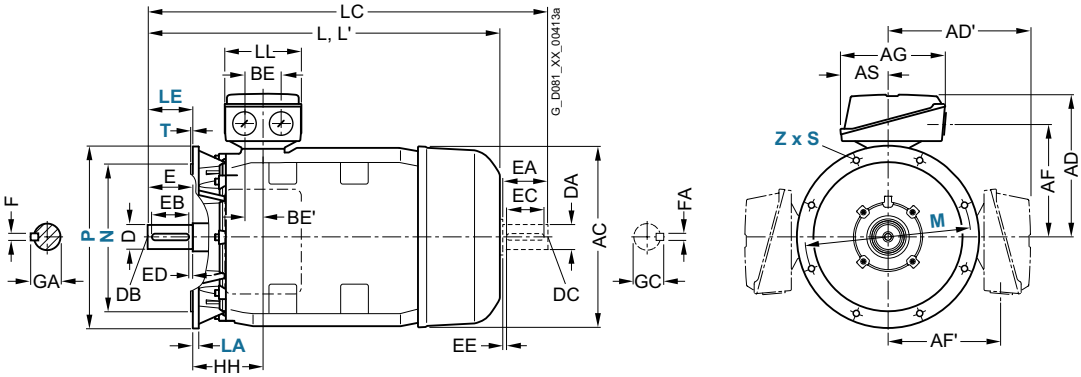

For motor			Dimension designation acc. to **IEC**																		
Frame size	Motor type 1LE1501-, 1LE1521-, 1LE1541- 1LE1601- 1LE1502-	No. of poles	A	AA	AB	AC	AD	AD'	AF	AF'	AG	AS	B	BA	BA'	BB	BC	BE	BE'	C	CA
280 S	2DA0	2	457	100	540	551	433	433	345	345	319	145	368	101	152	479	20	110	55	190	267
	2DB0, 2DC0, 2DD0	4, 6, 8																			267
280 M	2DA6	2											419								326
	2DA2																				216
	2DB2, 2DC2, 2DD2, 2DC6, 2DD6	4, 6, 8																			
	2DB6	4																			326
315 S	3AA0, 3AA2[2]	2	508	120	610	616	515	515	404	404	374	164	406	113	170	527	22	110	55	216	295
	3AB0, 3AC0, 3AD0	4, 6, 8																			
315 M	3AA2[1], 3AA5[2]	2											457			578					409
	3AB2[1]	4																			
	3AC2, 3AD2	6, 8																			
315 L[1]	3AA4	2											508			578					358
	3AB4, 3AC4, 3AD4, 3AC5, 3AD5, 3AD6	4, 6, 8																			
	3AA5, 3AA6	2											508	176	227	648					
	3AB5, 3AB6, 3AC6	4, 6																			

[1] For orders with screwed-on feet (order code **H01**), these screwed-on feet have 3 drilled holes on the NDE side with the dimension B 406 mm, 457 mm, and 508 mm respectively; the dimension BB is 666 mm.

[2] Only applicable for 1LE1502.

© Siemens AG 2018

Dimensional drawings (continued)

Type of construction IM B35

For flange dimensions, see page 1/53 (**Z** = the number of retaining holes)

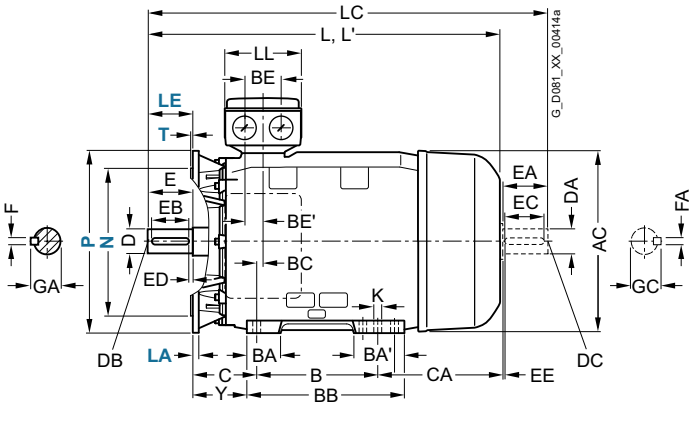

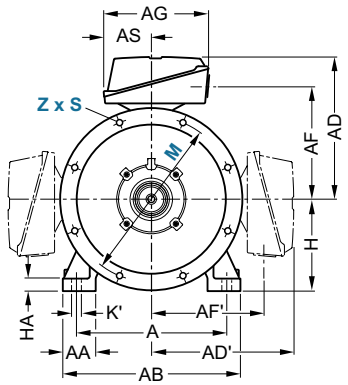

For motor	Dimension designation acc. to **IEC**									DE shaft extension							NDE shaft extension						
Motor type 1LE1501-, 1LE1521-, 1LE1541-1LE1601-1LE1502-	H	HA	Y	HH	K	K'	L	LC[1]	LL	D	DB	E	EB	ED	F	GA	DA	DC	EA	EC	EE	FA	GC
2DA0	280	40	160	210	24	30	960	1105	233	65	M20	140	125	10	18	69	60	M20	140	125	10	18	64
2DB0, 2DC0, 2DD0										75					20	79.5	65						69
2DA6							1070	1215		65					18	69	60						64
2DA2							960	1105															
2DB2, 2DC2, 2DD2, 2DC6, 2DD6										75					20	79.5	65						69
2DB6							1070	1215															
3AA0, 3AA2[2]	315	50	181	238	28	35	1052	1197	299	65	M20	140	125	10	18	69	60	M20	140	125	10	18	64
3AB0, 3AC0, 3AD0							1082	1227		80		170	140	25	22	85	70					20	74.5
3AA2, 3AA5[2]							1217	1362		65		140	125	10	18	69	60					18	64
3AB2							1247	1392		80		170	140	25	22	85	70					20	74.5
3AC2, 3AD2							1082	1227															
3AA4							1217	1362		65		140	125	10	18	69	60					18	64
3AB4, 3AC4, 3AD4, 3AC5, 3AD5, 3AD6							1247	1392		80		170	140	25	22	85	70					20	74.5
3AA5, 3AA6			146				1372	1517		65		140	125	10	18	69	60					18	64
3AB5, 3AB6, 3AC6							1402	1547		80		170	140	25	22	85	70					20	74.5

[1] In the low-noise version, a second shaft extension and/or mounted encoder is not possible.

[2] Only applicable for 1LE1502.

© Siemens AG 2018

Dimensional drawings

Type of construction IM B3

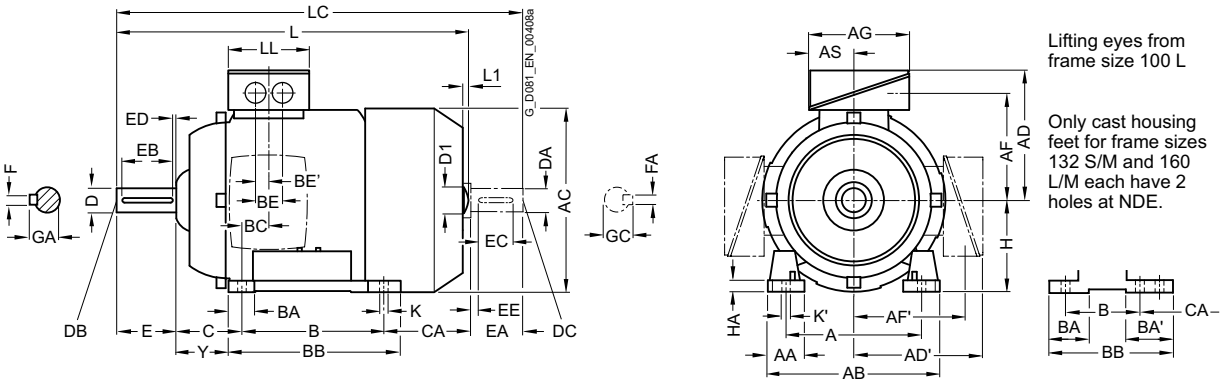

Types of construction IM B5 and IM V1

For flange dimensions, see page 1/53 (**Z** = the number of retaining holes)

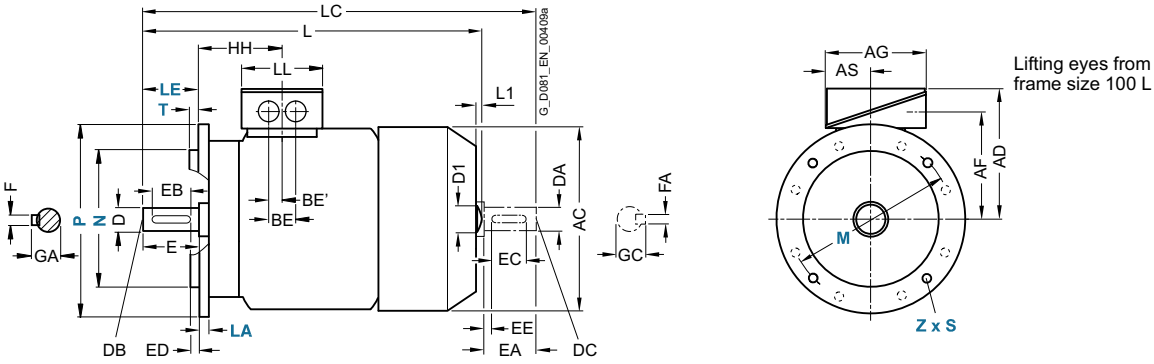

For motor			Dimension designation acc. to **IEC**																					
Frame size	Motor type 1LE15.3- 1LE16.3-	No. of poles	A	AA	AB	AC	AD	AD'	AF	AF'	AG	AS	B	BA	BA'	BB	BC	BE	BE'	C	CA	H	HA	Y
71 M	1LE15.3- 0..0, 0..2 0..3	2, 4, 6	112	30.5	132	145	149	149	112	112	126	62	90	32	32	106	21	36	18	45	83	71	7	37
80 M	1LE15.3- 0..0, 0..2 0..3	2, 4, 6	125	30.5	150	162	159	159	122	122	126	62	100	32	32	118	22.5	36	18	50	112.5	80	8	41
90 S	1LE15.3- 0..0, 0..2 0..3	2, 4, 6	140	30.5	165	180	164	164	127	127	126	62	100	33	54	143	24.5	36	18	56	159	90	11	47
90 L	1LE15.3	2, 4, 6	140	30.5	165	180	164	164	127	127	126	62	125	33	54	143	24.5	36	18	56	134	90	11	47
100 L	1AA4, 1AB4, 1AB5 1AC4	2, 4 6	160	42	196	217	193	193	147	147	163	80.5	140	48	48	176	37.5	48	24	63	141	100	12	45
112 M	All	2, 4, 6	190	46	226	239	195	195	150	150	163	80.5	140	48	48	176	30	48	24	70	130	112	12	52
132 S	1CA0, 1CC0	2, 6	216	53	256	281	214.5	214.5	169	169	163	80.5	140	52[5]	89[1]	218[2]	26.5	48	24	89	166.5	132	15	69
	1CA1, 1CB0	2, 4													–						178.5			
132 M	1CC2	6	216	53	256	281	214.5	214.5	169	169	163	80.5	178	52[5]	89[1]	218	26.5	48	24	89	128.5	132	15	69
	1CB2, 1CC3 1CB6	4, 6 4													–						178.5			
160 M	All	2, 4, 6	254	60	300	333.5	261	261	213	213	190	92	210	73[6]	117[3]	300[4]	37	60	30	108	192	160	18	85
160 L	All	2, 4, 6	254	60	300	333.5	261	261	213	213	190	92	254	73[6]	117[3]	300	37	60	30	108	148	160	18	85

[1] With screwed-on feet, dimension BA' is 41 mm.
[2] With screwed-on feet, dimension BB is 180 mm.
[3] With screwed-on feet, dimension BA' is 51 mm.
[4] With screwed-on feet, dimension BB is 256 mm.
[5] With screwed-on feet, dimension BA is 41 mm.
[6] With screwed-on feet, dimension BA is 51 mm.

© Siemens AG 2018

Dimensional drawings (continued)

Type of construction IM B35

For flange dimensions, see page 1/53 (**Z** = the number of retaining holes)

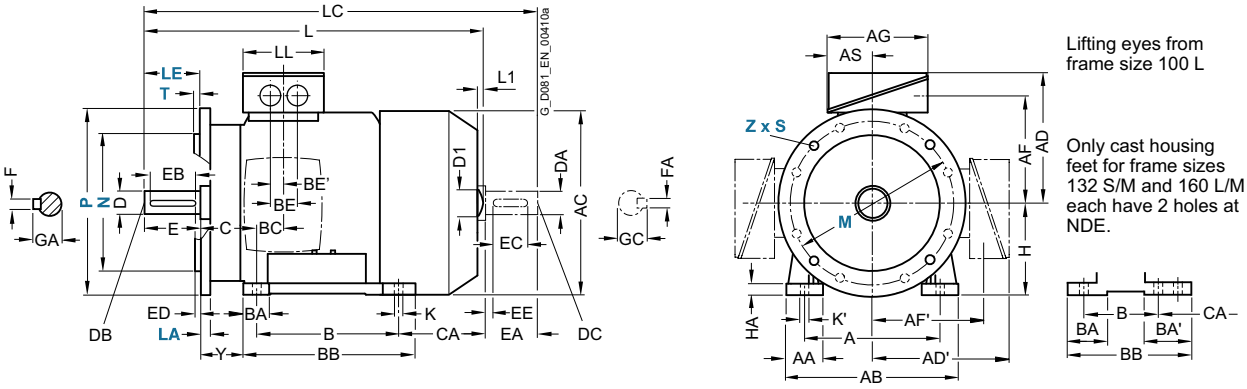

Type of construction IM B14

For flange dimensions, see page 1/53 (**Z** = the number of retaining holes)

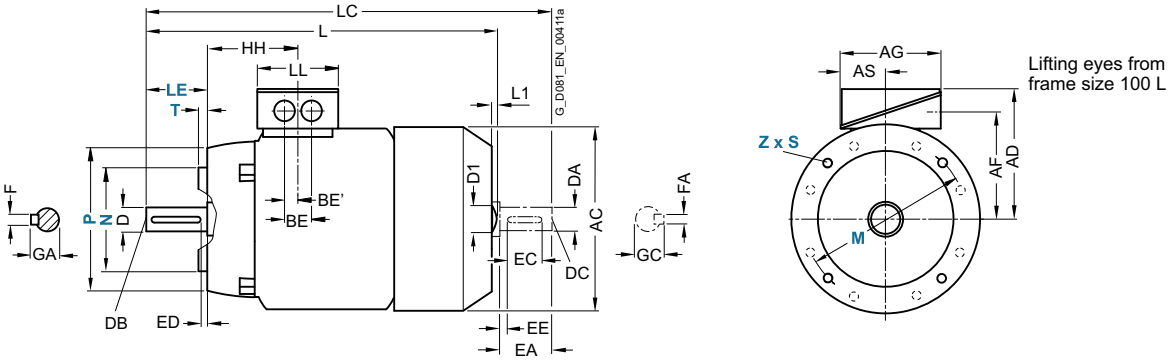

For motor			Dimension designation acc. to **IEC**								DE shaft extension							NDE shaft extension						
Frame size	Motor type 1LE15.3- 1LE16.3-	No. of poles	HH	K	K'	L[1]	L1[2]	D1	LC	LL	D	DB	E	EB	ED	F	GA	DA	DC	EA	EC	EE	FA	GC
71 M	1LE15.3- 0..0, 0..2 0..3	2, 4, 6	64.5	7.5	7.5	240 280	–	–	278 318	102	14	M5	30	22	4	5	16	14	M5	30	22	4	5	16
80 M	1LE15.3- 0..0, 0..2 0..3	2, 4, 6	71.5	10	10	292 327	–	–	343 378	102	19	M6	40	32	4	6	21.5	19	M6	40	32	4	6	21.5
90 S	1LE15.3- 0..0, 0..2 0..3	2, 4, 6	79.5	10	10	347	–	–	405	102	24	M8	50	40	5	8	27	19	M6	40	27	4	6	21.5
90 L	1LE15.3	2, 4, 6	79.5	10	10	387	–	–	445	102	24	M8	50	40	5	8	27	19	M6	40	27	4	6	21.5
100 L	1AA4, 1AB4, 1AB5	2, 4	100.5	12	16	432.5	7	32	489	134	28	M10	60	50	5	8	31	24	M8	50	40	5	8	27
	1AC4	6				397			342.5															
112 M	All	2, 4, 6	100.5	12	16	415.5	7	32	475	134	28	M10	60	50	5	8	31	24	M8	50	40	5	8	27
132 S	1CA0, 1CC0	2, 6	115.5	12	16	466.5	8.5	39	535.5	134	38	M12	80	70	5	10	41	28	M10	60	50	5	8	31
	1CA1, 1CB0	2, 4				516.5			585.5															
132 M	1CC2	6	115.5	12	16	466.5	8.5	39	535.5	134	38	M12	80	70	5	10	41	28	M10	60	50	5	8	31
	1CB2, 1CC3	4, 6				516.5			585.5															
	1CB6	4				567.5	–		630.5															
160 M	All	2, 4, 6	145	14.5	18	606	10	45	730	165	42	M16	110	90	10	12	45	42	M16	110	90	10	12	45
160 L	All	2, 4, 6	145	14.5	18	666	10	45	790	165	42	M16	110	90	10	12	45	42	M16	110	90	10	12	45

[1] For 1LE16 motors less dimension L1.

[2] Only for 1LE15 motors.

© Siemens AG 2018

Dimensional drawings

Type of construction IM B3

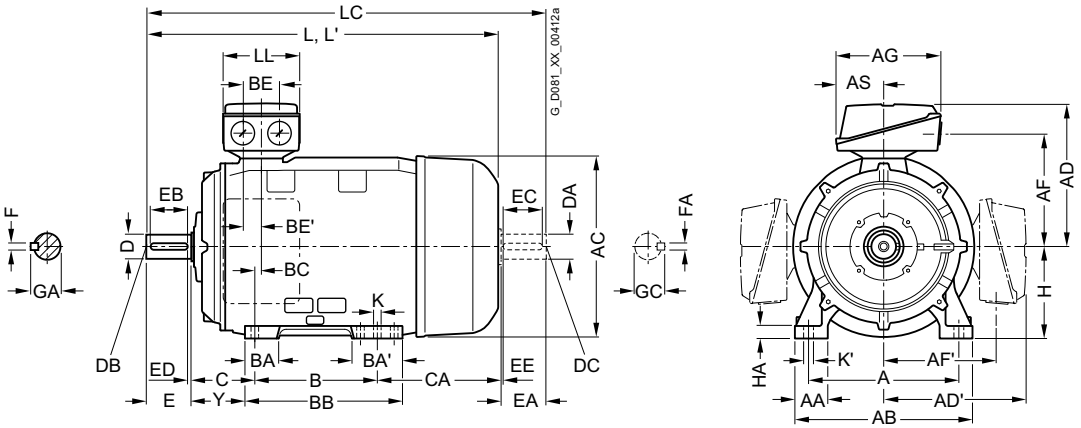

Types of construction IM B5 and IM V1

For flange dimensions, see page 1/53 (**Z** = the number of retaining holes)

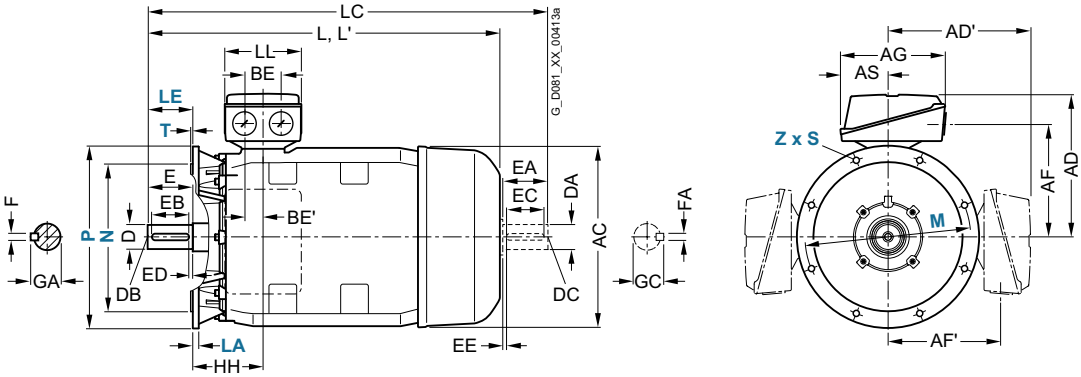

For motor			Dimension designation acc. to **IEC**																	
Frame size	Motor type 1LE1503-, 1LE1523-, 1LE1543- 1LE1603-, 1LE1623-, 1LE1643-	No. of poles	A	AA	AB	AC	AD	AD'	AF	AF'	AG	AS	B	BA	BA'	BB	BC	BE	BE'	C	CA
180 M/ 180 L	1EB2, 1EC4 1EA2, 1EB4	4, 6 2, 4	279	65	339	356	286	286	234	234	190	92	241	85	120	328	34	60	30	121	202
200 L	2AA4, 2AC4 2AA5, 2AB5, 2AC5	2, 6 2, 4, 6	318	70	378	396	315	315	259	259	266	112	305	104	104	355	31	85	42.5	133	177
225 S	2BB0	4	356	80	436	449	338	338	282	282	266	112	286	92	117	361	15	85	42.5	149	218
225 M	2BA2	2	356	80	436	449	338	338	282	282	266	112	311	92	117	361	15	85	42.5	149	253
	2BB2, 2BC2	4, 6																			
250 M	2CA2 2CB2, 2CC2	2 4, 6	406	100	490	497	410	410	322	322	319	145	349	102	102	409	24	110	55	168	230
280 S	2DA0	2	457	100	540	551	433	433	345	345	319	145	368	101	152	479	20	110	55	190	267
	2DB0, 2DC0	4, 6																			
280 M	2DC2	6	457	100	540	551	433	433	345	345	319	145	419	101	152	479	20	110	55	190	216
	2DA2	2																			326
	2DB2	4																			
315 S	3AA0	2	508	120	610	616	515	515	404	404	374	164	406	113	170	527	22	110	55	216	295
	3AB0, 3AC0	4, 6																			
315 M[1)]	3AA2	2	508	120	610	616	515	515	404	404	374	164	457	113	170	578	22	110	55	216	409
	3AB2, 3AC2	4, 6																			
315 L[1)]	3AA4	2	508	120	610	616	515	515	404	404	374	164	508	113	170	578	22	110	55	216	358
	3AB4, 3AC4	4, 6																			
	3AA5	2												176	227	648					513
	3AB5, 3AC5, 3AC6	4, 6																			

[1)] With terminal box position right, terminal box left, and with order code **H01** only screwed-on feet with 3 drilled holes with dimension "B" (406, 457, and 508 mm). The dimension "BB" will then be 666 mm.

© Siemens AG 2018

Dimensional drawings (continued)

Type of construction IM B35

For flange dimensions, see page 1/53 (**Z** = the number of retaining holes)

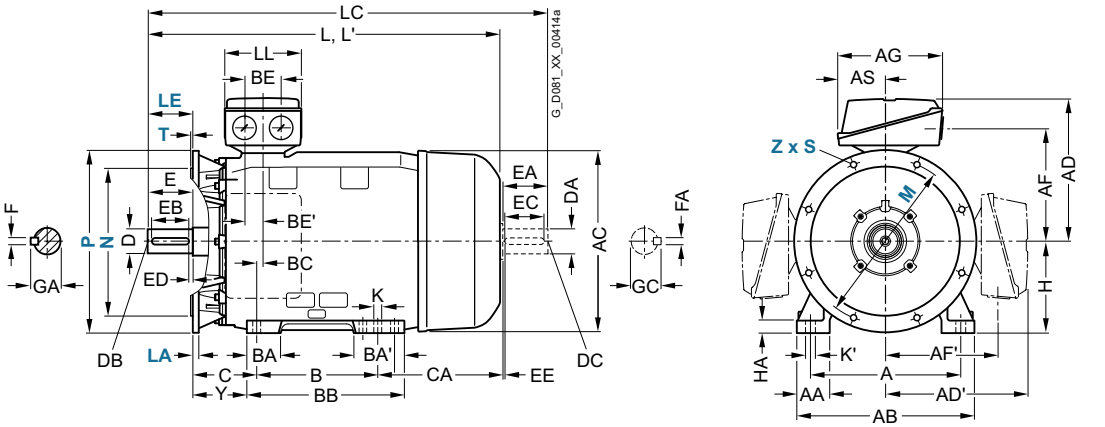

For motor	Dimension designation acc. to **IEC**									DE shaft extension							NDE shaft extension						
Motor type 1LE1503-, 1LE1523-, 1LE1543- 1LE1603-, 1LE1623-, 1LE1643-	H	HA	Y	HH	K	K'	L	LC[1)]	LL	D	DB	E	EB	ED	F	GA	DA	DC	EA	EC	EE	FA	GC
1EB2, 1EC4	180	20	95	155	15	19	668	784	164	48	M16	110	100	5	14	51.5	48	M16	110	100	5	14	51.5
1EA2, 1EB4							698	814															
2AA4, 2AC4	200	25	108	164	19	25	721	835	197	55	M20	110	100	5	16	59	55	M20	110	100	5	16	59
2AA5, 2AB5, 2AC5							746	860															
2BB0	225	34	124	164	19	25	788	903	197	60	M20	140	125	10	18	64	55	M20	110	100	5	16	59
2BA2							818	933	197	55		110	100	5	16	59	48	M16				14	51.5
2BB2, 2BC2							848	963		60		140	125	10	18	64	55	M20				16	59
2CA2	250	40	138	192	24	30	887	1002	233	60	M20	140	125	10	18	64	55	M20	110	100	5	16	59
2CB2, 2CC2								1032		65						69	60		140	125	10	18	64
2DA0	280	40	160	210	24	30	960	1105	233	65	M20	140	125	10	18	69	60	M20	140	125	10	18	64
2DB0, 2DC0										75					20	79.5	65						69
2DC2							960	1105	233	75		140	125	10	20	79.5	65				10	18	69
2DA2							1070	1215		65					18	69	60						64
2DB2										75					20	79.5	65						69
3AA0	315	50	181	238	28	35	1052	1197	299	65	M20	140	125	10	18	69	60	M20	140	125	10	18	64
3AB0, 3AC0							1082	1227		80		170	140	25	22	85	70					20	74.5
3AA2							1217	1362	299	65		140	125	10	18	69	60				10	18	64
3AB2, 3AC2							1247	1392		80		170	140	25	22	85	70					20	74.5
3AA4							1217	1362	299	65		140	125	10	18	69	60				10	18	64
3AB4, 3AC4							1247	1392		80		170	140	25	22	85	70					20	74.5
3AA5			146				1372	1517		65		140	125	10	18	69	60					18	64
3AB5, 3AC5, 3AC6							1402	1547		80		170	140	25	22	85	70					20	74.5

[1)] In the low-noise version, a second shaft extension and/or mounted encoder is not possible.

© Siemens AG 2018

Dimensional drawings

Type of construction IM B3

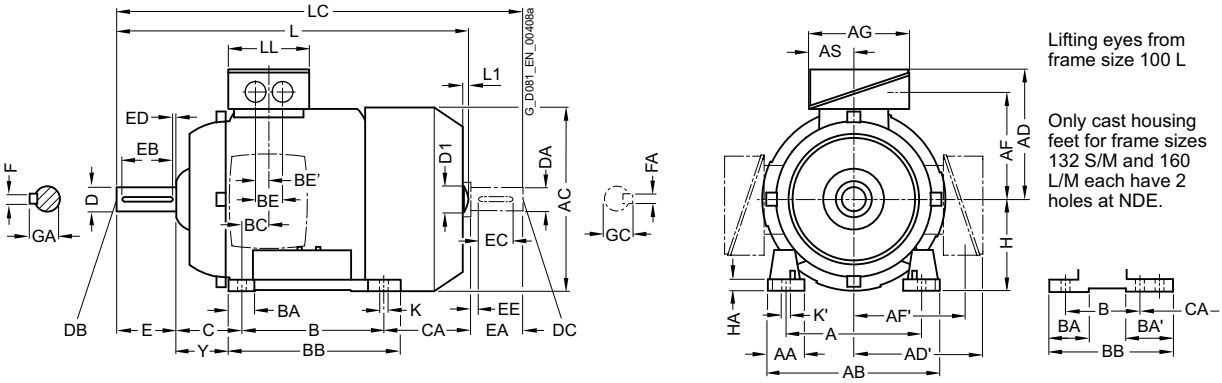

Types of construction IM B5 and IM V1

For flange dimensions, see page 1/53 (**Z** = the number of retaining holes)

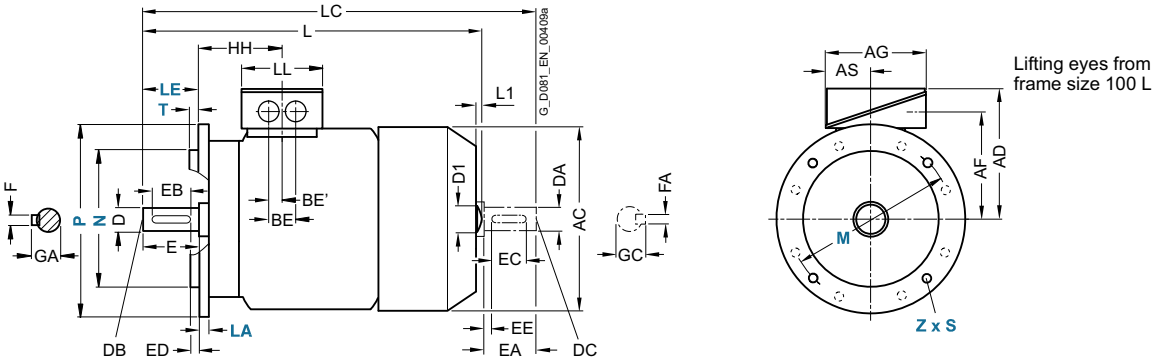

For motor			Dimension designation acc. to **IEC**																				
Frame size	Motor type 1LE1504- 1LE1604-	No. of poles	A	AA	AB	AC	AD	AD'	AF	AF'	AG	AS	B	BA	BA'	BB	BC	BE	BE'	C	CA	H	HA	Y
100 L	1AA4 1AB4 1AB5	2 4 4	160	42	196	217	193	193	147	147	163	80.5	140	48	48	176	37.5	48	24	63	176	100	12	45
112 M	1BA2 1BB2	2 4	190	46	226	239	195	195	150	150	163	80.5	140	48	48	176	30	48	24	70	155	112	12	52
132 S	1CA0 1CA1, 1CB0	2 2, 4	216	53	256	281	214.5	214.5	169	169	163	80.5	140	52[1]	89[5] –	218[2]	26.5	48	24	89	130 178.5	132	15	69
132 M	1CB2	4	216	53	256	281	214.5	214.5	169	169	163	80.5	178	52[1]	89[6]	218	26.5	48	24	89	178.5	132	15	69
160 M	1DA2 1DA3, 1DB2	2 2, 4	254	60	300	333.5	261	261	213	213	190	92	210	73[3]	117[7]	300[4]	37	60	30	108	148	160	18	85
160 L	1DA4 1DB4	2 4	254	60	300	333.5	261	261	213	213	190	92	254	73[3]	117[8]	300	37	60	30	108	208	160	18	85

[1] With screwed-on feet, dimension BA is 41 mm.
[2] With screwed-on feet, dimension BB is 180 mm.
[3] With screwed-on feet, dimension BA is 51 mm.
[4] With screwed-on feet, dimension BB is 256 mm.
[5] With screwed-on feet, dimension BA' is 41 mm.
[6] With screwed-on feet, dimension BA' is 79 mm.
[7] With screwed-on feet, dimension BA' is 51 mm.
[8] With screwed-on feet, dimension BA' is 95 mm.

© Siemens AG 2018

Dimensional drawings (continued)

Type of construction IM B35

For flange dimensions, see page 1/53 (**Z** = the number of retaining holes)

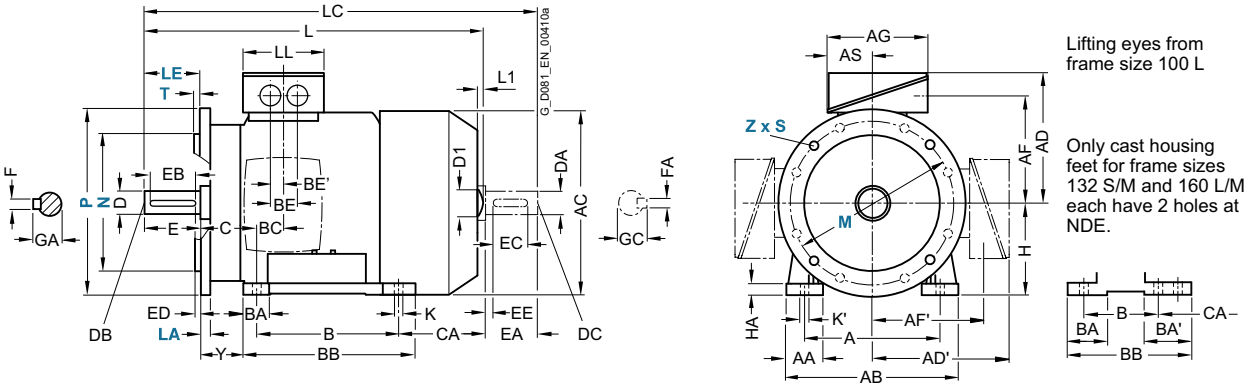

Type of construction IM B14

For flange dimensions, see page 1/53 (**Z** = the number of retaining holes)

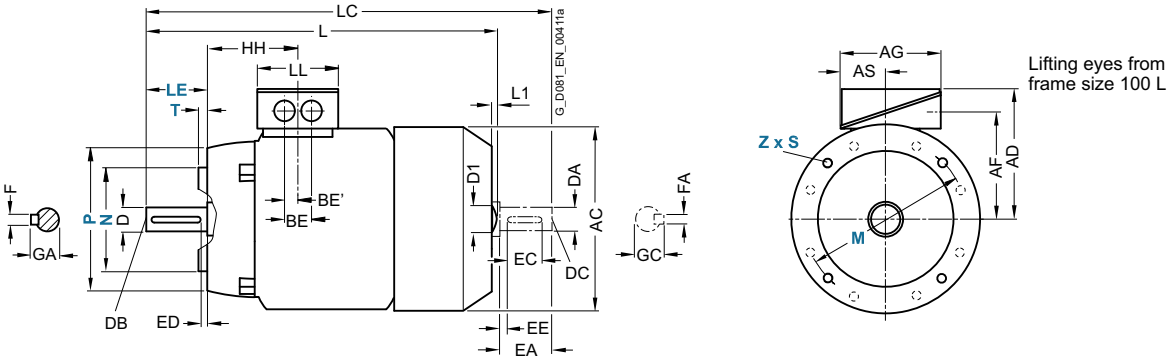

For motor			Dimension designation acc. to **IEC**								DE shaft extension							NDE shaft extension					
Frame size	Motor type 1LE1504- 1LE1604-	No. of poles	HH	K	K'	L[1]	L1[2]	D1	LC	LL	D	DB	E	EB	ED	F	GA	DA	DC	EA	EC	EE	FA	GC
100 L	1AA4 1AB4 1AB5	2 4 4	100.5	12	16	432.5 482.5	7 7	32	489 529	134	28	M10	60	50	5	8	31	24	M8	50	40	5	8	27
112 M	1BA2 1BB2	2 4	100.5	12	16	415.5 465.5	7	32	475 515	134	28	M10	60	50	5	8	31	24	M8	50	40	5	8	27
132 S	1CA0 1CA1, 1CB0	2 2, 4	115.5	12	16	466.5 516.5	8.5	39	535.5 585.5	134	38	M12	80	70	5	10	41	28	M10	60	50	5	8	31
132 M	1CB2	4	115.5	12	16	516.5	8.5	39	585.5	134	38	M12	80	70	5	10	41	28	M10	60	50	5	8	31
160 M	1DA2 1DA3, 1DB2	2 2, 4	145	15	19	606 666	10	45	730	165	42	M16	110	90	10	12	45	42	M16	110	90	10	12	45
160 L	1DA4 1DB4	2 4	145	15	19	666	10	45	790	165	42	M16	110	90	10	12	45	42	M16	110	90	10	12	45

[1] For 1LE16 motors less dimension L1.

[2] Only for 1LE15 motors.

© Siemens AG 2018

Dimensional drawings

Type of construction IM B3

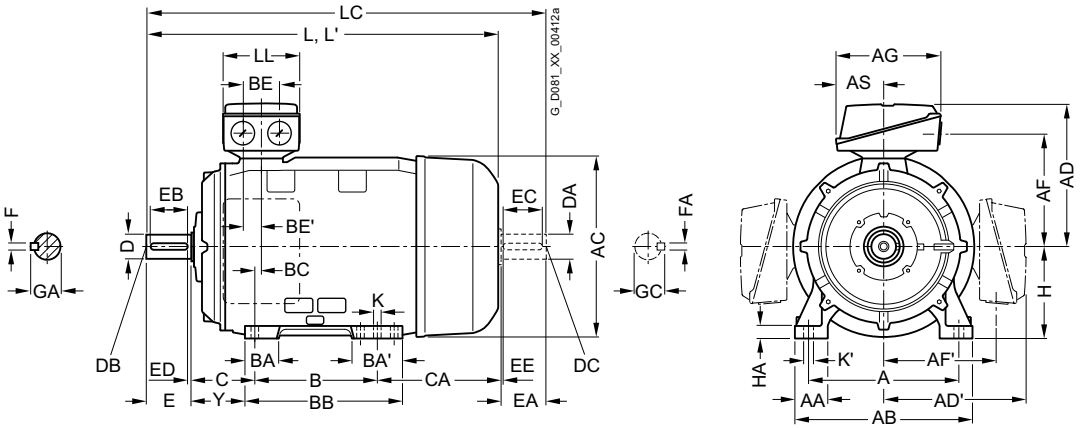

Types of construction IM B5 and IM V1

For flange dimensions, see page 1/53 (**Z** = the number of retaining holes)

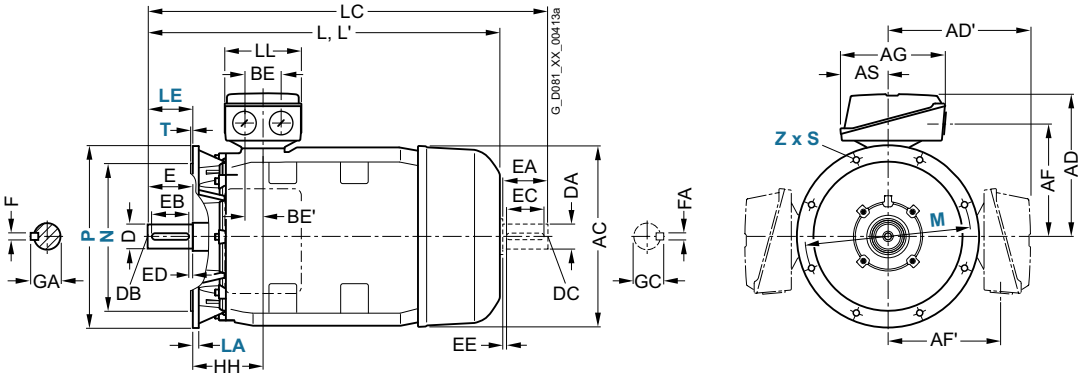

For motor			Dimension designation acc. to **IEC**																		
Frame size	Motor type 1LE1504- 1LE1604-	No. of poles	A	AA	AB	AC	AD	AD'	AF	AF'	AG	AS	B*	BA	BA'	BB	BC	BE	BE'	C	CA*
180 M 180 M 180 L	1EA2 1EB2 1EB4	2 4 4	279	65	339	356	286	286	234	234	189	92	241/ 279	85	120	328	34	60	30	121	202
200 L	2AA4 2AA5, 2AB5	2 2, 4	318	70	378	396	315	315	258.5	258.5	265	112	305	104	104	355	31	85	42.5	133	177
225 S	2BB0	4	356	80	436	449	338	338	282	282	266	112	286	92	117	361	15	85	42.5	149	218
225 M	2BA2 2BB2	2 4	356	80	436	449	338	338	282	282	266	112	311	92	117	361	15	85	42.5	149	253
250 M	2CA2 2CB2	2 4	406	100	490	497	410	410	322	322	319	145	349	102	102	409	24	110	55	168	230
280 S	2DA0 2DB0	2 4	457	100	540	551	433	433	345	345	319	145	368	101	152	479	20	110	55	190	267
280 M	2DA2 2DB2	2 4	457	100	540	551	433	433	345	345	319	145	419	101	152	479	20	110	55	190	216 326
315 S	3AA0	2	508	120	610	616	515	515	404	404	374	164	406	113	170	527	22	110	55	216	295
315 M[2)]	3AB0	4	508	120	610	616	515	515	404	404	374	164	457	113	170	578	22	110	55	216	295
315 M[1)]	3AA2 3AB2	2 4																			409
315 L[1)]	3AA4 3AB4 3AA5 3AB5	2 4 2 4	508	120	610	616	515	515	404	404	374	164	508	113 176	170 227	578 648	22	110	55	216	358 513

* Please note that version 3AB0 does not comply with EN 50347 with respect to assignment of this dimension to the frame size.

1) With terminal box position right, terminal box left, and with order code **H01** only screwed-on feet with 3 drilled holes with dimension "B" (406, 457, and 508 mm). The dimension "BB" will then be 666 mm.

2) 1LE1504-3AB0 and 1LE1604-3AB0 4-pole motors cannot be constructed in standard frame size 315 S because they require the longer housing of frame size 315 M in order to achieve the requisite efficiency levels. The foot clearance dimension "B" therefore changes from 406 to 457 mm. The motors comply with standard IEC 60034, but not with standard EN 50347 in this respect.

© Siemens AG 2018

2

Dimensional drawings (continued)

Type of construction IM B35

For flange dimensions, see page 1/53 (**Z** = the number of retaining holes)

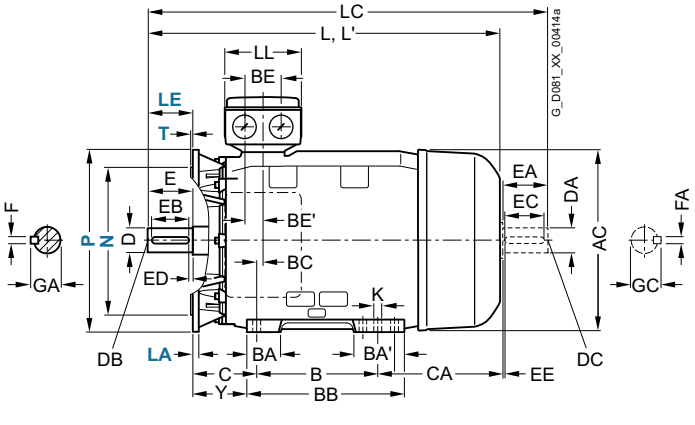

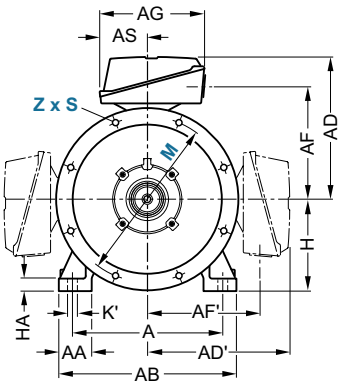

For motor		Dimension designation acc. to **IEC**									DE shaft extension							NDE shaft extension						
Motor type 1LE1504- 1LE1604-	No. of poles	H	HA	Y	HH	K	K'	L	LC[1]	LL	D	DB	E	EB	ED	F	GA	DA	DC	EA	EC	EE	FA	GC
1EA2	2	180	20	95	155	15	19	698	814	164	48	M16	110	100	5	14	51.5	48	M16	110	100	5	14	51.5
1EB2	4							668	784															
1EB4	4							698	814															
2AA4	2	200	25	108	164	19	25	746	860	197	55	M20	110	100	5	16	59	55	M20	110	100	5	16	59
2AA5, 2AB5	2, 4							746																
2BB0	4	225	34	124	164	19	25	848	903	197	60	M20	140	125	10	18	64	55	M20	110	100	5	16	59
2BA2	2	225	34	124	164	19	25	818	933	197	55	M20	110	100	5	16	59	48	M16	110	100	5	14	51.5
2BB2	4							928	963		60		140	125	10	18	64	55	M20				16	59
2CA2	2	250	40	138	192	24	30	887	1002	233	60	M20	140	125	10	18	64	55	M20	110	100	5	16	59
2CB2	4							957	1032		65						69	60		140	125	10	18	64
2DA0	2	280	40	160	210	24	30	1070	1105	233	65	M20	140	125	10	18	69	60	M20	140	125	10	18	64
2DB0	4										75					20	79.5	65						69
2DA2	2	280	40	160	210	24	30	1070	1215	233	65	M20	140	125	10	18	69	60	M20	140	125	10	18	64
2DB2	4										75					20	79.5	65						69
3AA0	2	315	50	181	238	28	35	1052	1197	299	65	M20	140	125	10	18	69	60	M20	140	125	10	18	64
3AB0	4	315	50	181	238	28	35	1247	1392	299	80	M20	170	140	25	22	85	70	M20	140	125	10	20	74.5
3AA2	2							1217	1362		65		140	125	10	18	69	60					18	64
3AB2	4							1247	1392		80		170	140	25	22	85	70					20	74.5
3AA4	2	315	50	181	238	28	35	1217	1362	299	65	M20	140	125	10	18	69	60	M20	140	125	10	18	64
3AB4	4							1402	1392		80		170	140	25	22	85	70					20	74.5
3AA5	2			146				1372	1517		65		140	125	10	18	69	60					18	64
3AB5	4							1402	1547		80		170	140	25	22	85	70					20	74.5

[1] In the low-noise version, a second shaft extension and/or mounted encoder is not possible.

© Siemens AG 2018

Notes

© Siemens AG 2018

3/2 Orientation
3/2 Overview, benefits, application, configuration, technical specifications, more information
3/7 Article number code

3/8 Motors with IE4 Super Premium Efficiency
3/8 SIMOTICS SD self-ventilated or forced-air cooled motors – cast-iron series
3/8 • 1LE5504 Basic Line
3/9 • 1LE5604 Performance Line
3/10 SIMOTICS SD Add self-ventilated or forced-air cooled motors – cast-iron series
3/10 • 1LE5534 Basic Line
3/11 • 1LE5634 Performance Line

3/12 Motors with IE3 Premium Efficiency
3/12 SIMOTICS SD self-ventilated or forced-air cooled motors – cast-iron series
3/12 • 1LE5503 Basic Line
3/13 • 1LE5603 Performance Line
3/14 SIMOTICS SD Add self-ventilated or forced-air cooled motors – cast-iron series
3/14 • 1LE5533 Basic Line
3/15 • 1LE5633 Performance Line

3/16 Article No. supplements and special versions
3/16 Voltages
3/17 Types of construction
3/19 Motor protection
3/20 Terminal box position
3/21 Options
3/28 Accessories

3/30 Dimensions
3/30 Overall dimensions
3/31 Notes on the dimensions
3/31 Dimension sheet generator
3/32 SIMOTICS SD self-ventilated motors – cast-iron series
• 1LE5504/1LE5503 Basic Line
• 1LE5604/1LE5603 Performance Line
3/34 SIMOTICS SD Add self-ventilated motors – cast-iron series
• 1LE5534/1LE5533 Basic Line
• 1LE5634/1LE5633 Performance Line

© Siemens AG 2018

Overview

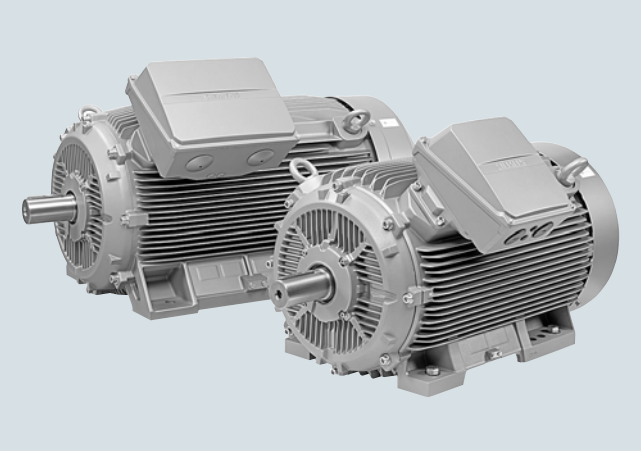

The SIMOTICS SD next generation is a new scalable generation of low-voltage motors. With their impressive performance and the additional versatility in their range of applications, this new motor series offers entry into a future-proof drive technology.

In addition to the future topics of digitalization and energy efficiency, this motor generation was developed with the focus on design optimization, which has resulted in a very compact motor design with a high power density. A standardized option range and the variable terminal box concept also enable flexible use of the motors in different system configurations and applications. The fact that the motors can run either on the line or on a converter is part of their versatility.

The following versions are available in the new 1LE5 motor series, differentiated by their performance features and functionality:

- **SIMOTICS SD**
  These motors are characterized by reliable and powerful performance even in the toughest environmental conditions. The characteristics with higher torques ensure that higher starting and breakaway torques are available.
- **SIMOTICS SD Add**
  The characteristic product feature of the SIMOTICS SD Add are the low starting currents. These not only meet industry-specific specifications, above all, in process industries, but also have a positive impact on the operating quality (higher power system stability, lower thermal load, increased motor lifetime). Through the availability of country-specific certificates, these motors can be used in all the important global regions and markets.

One decisive advantage of these SIMOTICS SD next generation motors is the possibility of digital communication. This results in many advantages not just for engineering but throughout the product lifecycle.

SIMOTICS Digital Data App – Access to motor data at any time

The freely available SIMOTICS Digital Data App enables access to all motor-specific data and documents (electrical and mechanical data, dimensional drawings, operating instructions, spare part information, etc.) by reading in the data matrix codes present on every motor as standard. This increases transparency and makes commissioning and servicing easier.

SIMOTICS SD Next Generation – The first motors to have an interface with the digital world

The SIMOTICS SD next generation motors will be the first low-voltage motors to support cloud-based condition data analysis via MindSphere and MindApp with SIMOTICS CONNECT in the near future. The motors are therefore ready for preventive maintenance and fast service, which further increases the availability and productivity of your system.

© Siemens AG 2018

Benefits

- Rugged design in the cast-iron housing increases reliability and availability.
- Compact dimensions/high power density enable use even in confined space conditions.
- High energy efficiency on the line (IE3, IE4) and on a converter (IES2) enable energy-saving operation.
- A standardized range of options and a variable terminal box concept increase the flexible adaptation to the requirements of the application.
- Support of line and converter operation reduces the variety.
- Provision of comprehensive CAD data simplifies the design and engineering phase.
- Digital features, such as the data matrix code and support by the cloud-based condition data analysis via MindSphere as part of SIMOTICS IQ permit efficient service and preventive maintenance.

Application

SIMOTICS SD 1LE5 motors are ideal for use in a large number of standard applications, such as

- Pumps, fans, compressors
- Conveyors
- Winders
- Mixers
- Extruders
- Cranes

They are preferably used in industries such as

- Mining, cement
- Chemical industry
- Oil and gas
- Steel industry
- Water, waste water
- Heating, ventilation, and air-conditioning (HVAC)
- Pulp and paper industry
- Marine engineering

© Siemens AG 2018

Configuration

Terminal box positions

Standard 1LE5...-.....-... ■	Rotated 180° 1LE5...-.....-... ■ -Z ■■■	Rotated 90°, cable entry DE 1LE5...-.....-... ■ -Z ■■■	Rotated 90°, cable entry NDE 1LE5...-.....-... ■ -Z ■■■
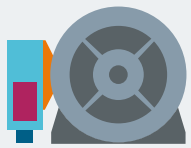 6	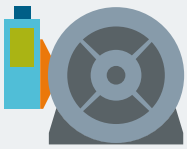 6 R12	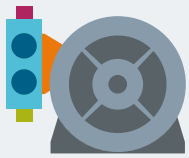 6 R10	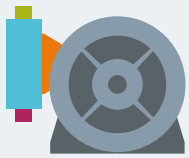 6 R11
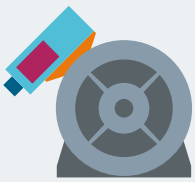 2	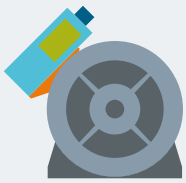 2 R12	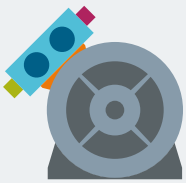 2 R10	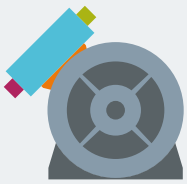 2 R11
0	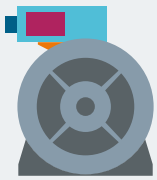 0 R12	0 R10	0 R11
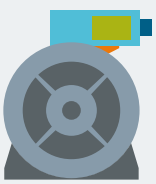 1	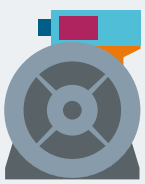 1 R12	1 R10	1 R11
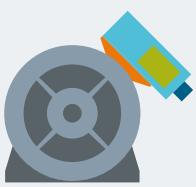 3	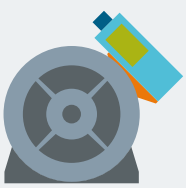 3 R12	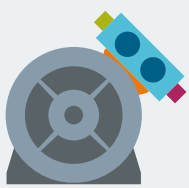 3 R10	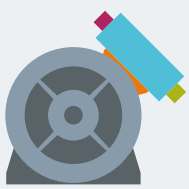 3 R11
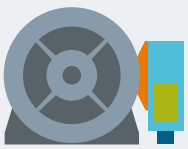 5	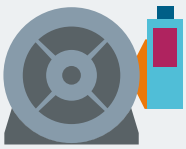 5 R12	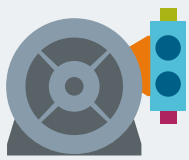 5 R10	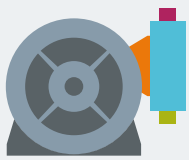 5 R11

© Siemens AG 2018

Configuration (continued)

Terminal box positions for flanged types of construction only

Standard	Rotated 180°		
1LE5...-.....-... ■	1LE5...-.....-... ■	1LE5...-.....-... ■	1LE5...-.....-... ■
		■■■	■■■
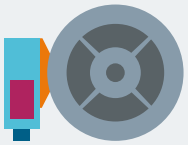	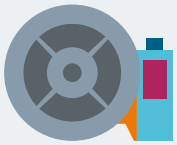		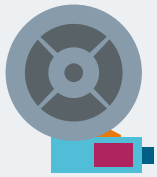
Terminal box left 6 →	Terminal box right 9	R6R	Terminal box bottom 9 R7L	Terminal box bottom 9 R7R
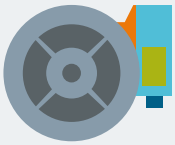				
Terminal box right 5 →	Terminal box left 9	R5L		

Types of construction

IM B3

IM B5

Legend

- Auxiliary terminal box 1 (3)
- Auxiliary terminal box 2 (4)
- Terminal box
- Adapter
- Cable entry

© Siemens AG 2018

Technical specifications

Overview of technical specifications

This table lists the most important technical specifications. For more information and details, see Catalog Section 1 "Introduction".

Type of motor	SIMOTICS SD 1LE5 IEC Low-Voltage Motors
Connection types	Star/delta connection The connection type to be used can be established from the Article No. supplements for the required motor.
Number of poles	2, 4, 6, 8
Frame sizes	315 L ... 355 L
Rated power	200 ... 500 kW
Frequencies	50 Hz and 60 Hz
Versions	• IE3 (Premium Efficiency) • IE4 (Super Premium Efficiency)
Marking	IEC 60034-30-1 IE3, IE4: 2, 4 and 6-pole
Rated speed (synchronous speed)	1000 … 3600 rpm
Rated torque	670 ... 3850 Nm
Insulation of the stator winding in accordance with EN 60034-1 (IEC 60034-1)	Temperature class 155 (F), utilized to temperature class 130 (B) DURIGNIT IR 2000 insulation system
Degree of protection according to EN 60034-5 (IEC 60034-5)	IP55 as standard
Cooling in accordance with EN 60034-6 (IEC 60034-6)	• Self-ventilated (IC 411) • Forced-air cooled (IC 416)
Permissible coolant temperature and installation altitude	–20 ... +40 °C as standard, installation altitude up to 1000 m above sea level. See "Coolant temperature and installation altitude" in Catalog Section 1 "Introduction".
Standard voltages according to EN 60038 (IEC 60038)	50 Hz: 400 V, 500 V, 690 V The voltage used can be found in the "Selection and ordering data" for the required motor.
Type of construction according to EN 60034-7 (IEC 60034-7)	• Without flange: IM B3, IM B6, IM B7, IM B8, IM V5, IM V6 • With flange: IM B5, IM V1, IM V3, IM B35
Paint finish	Standard: color RAL 7030 stone gray
Suitability of paint finish for climate group according to IEC 60721, Part 2-1	See "Paint finish" in Catalog Section 1 "Introduction".
Vibration severity grade according to EN 60034-14 (IEC 60034-14)	Grade A (normal – without special vibration requirements) Optionally: Grade B (with special vibration requirements) See "Balance and vibration severity" in Catalog Section 1 "Introduction".
Shaft extension according to DIN 748 (IEC 60072)	Balancing type: Half-key balancing as standard See "Balance and vibration severity" in Catalog Section 1 "Introduction".
Sound pressure level according to EN ISO 1680 (tolerance +3 dB)	The sound pressure level is listed in the selection and ordering data for the required motor.
Weights	The weight is listed in the selection and ordering data for the required motor.
Modular mounting concept	Rotary pulse encoder, brake, separately driven fan or prepared for mountings
Consistent series concept	• Terminal box obliquely partitioned and rotatable through 4 x 90° • Bearings at DE and NDE are of identical design, reinforced bearings available as an option
Options	See "Article No. supplements and special versions"

More information

For further information, please get in touch with your local Siemens contact and use the DT Configurator.

Contacts: www.siemens.com/automation/partner

DT Configurator: www.siemens.com/dt-configurator

You can find out about certain technologies through Siemens contact partners worldwide.

Wherever possible, you will find a local contact for:
- Technical support
- Spare parts/repairs
- Service
- Training
- Marketing & Sales
- Technical consultation/engineering

You start by selecting a:
- country
- product or
- sector.

© Siemens AG 2018

Selection and ordering data

The article number consists of a combination of digits and letters and is divided into three hyphenated blocks to provide a better overview, e.g.:
1LE5504-3AA63-4AA2-Z
H00

The first block (positions 1 to 7) identifies the motor type. The second block (positions 8 to 12) defines the motor frame size and length, the number of poles and in some cases the frequency/voltage. In the third block (positions 13 to 16), the frequency/voltage, type of construction and further design features are encoded.

For deviations in the second and third block from the catalog codes either **Z** or **90** should be used as appropriate.

Ordering data:

- Complete Article No. and order code(s) or plain text
- If a quotation has been requested, please specify the quotation number in addition to the Article No.
- When ordering a complete motor as a spare part, please specify the works serial No. for the previously supplied motor as well as the Article No.

Structure of the Article No.:	Position:	1	2	3	4	5	6	7	-	8	9	10	11	12	-	13	14	15	16	
1st to 4th position: Digit, letter, letter, digit	• Self-ventilated by fan mounted on and driven by the rotor • Forced-air cooled by air flow from the fan to be driven with option extension **F90**	**1**	**L**	**E**	**5**															
5th position: Digit	Cast-iron housing Basic Line					**5**														
	Cast-iron housing Performance Line					**6**														
6th to 7th position: 2 digits	SIMOTICS SD motors with IE3 Premium Efficiency						**0**	**3**												
	SIMOTICS SD Add motors with IE3 Premium Efficiency						**3**	**3**												
	SIMOTICS SD motors with IE4 Super Premium Efficiency						**0**	**4**												
	SIMOTICS SD Add motors with IE4 Super Premium Efficiency						**3**	**4**												
8th, 9th and 11th position: Digit, letter, digit	**Motor frame size** (frame size as a combination of shaft height and overall length, encoded)									**3**	**A** ... **B**		**3** ... **7**							
10th position: Letter	**No. of poles**																			
	A: 2-pole											**A**								
	B: 4-pole											**B**								
	C: 6-pole											**C**								
	D: 8-pole											**D**								
12th and 13th Position: 2 digits	**Voltage, circuit and frequency** (encoded with two digits, 9-0 requires order code M.. (e.g. M1Y))													**0** ... **9**		**0** ... **7**				
14th position: Letter	**Type of construction** (encoded with A ... V)																**A** ... **V**			
15th position: Letter	**Motor protection** (encoded with A ... Z; Z requires order code Q.. (e.g. Q3A))																	**A** ... **Z**		
16th position: Digit	**Terminal box position**																			
	Terminal box base left with terminal box 45°																		**2**	
	Terminal box base right with terminal box 45°																		**3**	
	Special order versions: encoded – additional order code required not encoded – additional plain text required																			- **Z**

Ordering example

Selection criteria	Requirement	Structure of the Article No.
Motor type 1LE5	Standard motor with IE4 Super Premium Efficiency, self-ventilated, IP55 degree of protection, cast-iron version, Performance Line	**1LE5604-■■■■■-■■■■**
Motor frame size/No. of poles/Speed	315 L/2-pole/3000 rpm	**1LE5604-3AA6■-■■■■**
Rated power	250 kW	
Voltage and frequency	400 VΔ/690 VY, 50 Hz	**1LE5604-3AA63-4■■■**
Type of construction with special version	IM V5 with protective cover [1]	**1LE5604-3AA63-4C■■-Z** **H00**
Motor protection	1 or 3 PTC thermistors – for tripping (2 terminals)	**1LE5604-3AA63-4CB■-Z** **H00**
Terminal box position	Terminal box base left with terminal box 45°	**1LE5604-3AA63-4CB2-Z** **H00**

[1] Without protective cover as standard – the protective cover is defined with order code **H00** and must be ordered in addition to the Article No. with **-Z** and this order code.

© Siemens AG 2018

Selection and ordering data

		Operating values at rated power												Cast-iron series 1LE5504 Basic Line Article No.		
P_{rated}	Frame size	n_{rated}	T_{rated}	$\eta_{rated,4/4}$	$\eta_{rated,3/4}$	$\eta_{rated,2/4}$	$\cos\varphi_{rated,4/4}$	I_{rated}	T_{LR}/T_{rated}	I_{LR}/I_{rated}	T_B/T_{rated}	L_{pfA}	L_{WA}		$m_{IM\ B3}$	J
kW	FS	rpm	Nm	%	%	%		A				dB(A)	dB(A)	▲ New	kg	kgm^2
• **Cooling: Self-ventilated (IC411)** • **Efficiency according to IEC 60034-30: IE4 Super Premium Efficiency, service factor (SF) 1.15** • **Insulation: Thermal class 155 (temperature class F), IP55 degree of protection, utilization in accordance with thermal class 130 (temperature class B)**																
2-pole: 3000 rpm at 50 Hz																
250	**315 L**	2986	800	96.5	96.4	95.7	0.88	425	3	9.3	4.2	80	94	▲ **1LE5504-3AA6■-■■■■**	1340	2.82
315	**315 L**	2986	1007	96.5	96.3	95.5	0.87	540	3.5	9.9	4.2	81	96	▲ **1LE5504-3AA7■-■■■■**	1520	3.27
4-pole: 1500 rpm at 50 Hz																
250	**315 L**	1490	1602	96.7	96.8	96.5	0.86	435	2.8	7.9	3.2	75	90	▲ **1LE5504-3AB6■-■■■■**	1500	4.98
315	**315 L**	1490	2019	96.7	96.7	96.3	0.83	570	3.2	8.5	3.5	75	90	▲ **1LE5504-3AB7■-■■■■**	1560	5.39
6-pole: 1000 rpm at 50 Hz																
200	**315 L**	992	1925	96.3	96.4	96.1	0.82	365	3	7.5	3.2	68	83	▲ **1LE5504-3AC7■-■■■■**	1410	6.28
250	**315 L**	992	2407	96.5	96.6	96.3	0.81	460	3.2	8.2	3.3	69	84	▲ **1LE5504-3AC8■-■■■■**	1700	8.00
8-pole: 750 rpm at 50 Hz																
160	**315 L**	741	2062	95.1	95.5	95.5	0.79	305	2.5	6.3	2.5	67	82	▲ **1LE5504-3AD7■-■■■■**	1420	6.78
200	**315 L**	742	2574	95.4	95.6	95.3	0.78	390	2.7	6.7	2.9	72	87	▲ **1LE5504-3AD8■-■■■■**	1660	8.60

Voltages [1]		Version						Order code
50 Hz 400 VΔ/690 VY	60 Hz [1] 460 VΔ	**Standard**	**3**	**4**				–
50 Hz 500 VΔ		Without additional charge	**4**	**0**				–
50 Hz 690 VΔ		With additional charge	**4**	**7**				–
For other voltages [1] and more information, see from page 3/16			■	■				. . .
Types of construction		Version						Order code
Without flange	IM B3 [2]	**Standard**			**A**			–
With flange	IM B5 [2]	With additional charge			**F**			–
For other types of construction and more information, see from page 3/17					■			. . .
Motor protection		Version						Order code
Without		**Standard**				**A**		–
PTC thermistor with 3 temperature sensors		With additional charge				**B**		–
For other motor protection and more information, see from page 3/19						■		. . .
Terminal box position		Version						Order code
Terminal box base left with terminal box 45°		Without additional charge					**2**	–
Terminal box base right with terminal box 45°		**Standard**					**3**	–
For other terminal box positions and more information, see from page 3/20							■	. . .

Special versions		Order code(s)
Forced-air cooled motors w/o ext. fan/fan cover (IC418)	**1LE5504-. . . . ■-■■■■-Z**	**F90+. . .+. . .+. . .**
For options, see from page 3/21	**1LE5504-. . . . ■-■■■■-Z**	**. . .+. . .+. . .+. . .**

1) Parallel supply lines are required, except in the case of connection to 690 V.

2) For a power rating of 315 kW, 2-pole, 60 Hz and 315 kW, 4-pole, 50 Hz, a larger terminal box can be used (order code **R50**) due to the magnitude of the current.
Order code **R50** alters the motor dimensions.

© Siemens AG 2018

Selection and ordering data

P_{rated}	Frame size	Operating values at rated power n_{rated}	T_{rated}	η_{rated}, 4/4	η_{rated}, 3/4	η_{rated}, 2/4	cos-φ_{rated}, 4/4	I_{rated}	T_{LR}/T_{rated}	I_{LR}/I_{rated}	T_B/T_{rated}	L_{pfA}	L_{WA}	Cast-iron series 1LE5604 Performance Line Article No.	$m_{IM\ B3}$	J
kW	FS	rpm	Nm	%	%	%		A				dB(A)	dB(A)	▲ New	kg	kgm²
• Cooling: Self-ventilated (IC411) • Efficiency according to IEC 60034-30: IE4 Super Premium Efficiency, service factor (SF) 1.15 • Insulation: Thermal class 155 (temperature class F), IP55 degree of protection, utilization in accordance with thermal class 130 (temperature class B)																
2-pole: 3000 rpm at 50 Hz																
250	**315 L**	2986	800	96.5	96.4	95.7	0.88	425	3	9.3	4.2	80	94	▲ **1LE5604-3AA6■-■■■■**	1340	2.82
315	**315 L**	2986	1007	96.5	96.3	95.5	0.87	540	3.5	9.9	4.2	81	96	▲ **1LE5604-3AA7■-■■■■**	1520	3.27
355	**355 M**	2988	1135	96.5	96.3	95.5	0.89	600	2.6	8.9	4	84	99	▲ **1LE5604-3BA3■-■■■■**	2100	4.74
400	**355 L**	2986	1279	96.5	96.4	95.9	0.92	650	2.6	8.5	3.4	83	98	▲ **1LE5604-3BA4■-■■■■**	2240	5.36
500	**355 L**	2988	1598	96.5	96.4	95.8	0.89	840	3	8.9	3.8	84	98	▲ **1LE5604-3BA5■-■■■■**	2340	5.76
4-pole: 1500 rpm at 50 Hz																
250	**315 L**	1490	1602	96.7	96.8	96.5	0.86	435	2.8	7.9	3.2	75	90	▲ **1LE5604-3AB6■-■■■■**	1500	4.98
315	**315 L**	1490	2019	96.7	96.7	96.3	0.83	570	3.2	8.5	3.5	75	90	▲ **1LE5604-3AB7■-■■■■**	1560	5.39
355	**355 M**	1492	2272	96.7	96.7	96.2	0.83	640	2.8	7.9	2.8	81	96	▲ **1LE5604-3BB3■-■■■■**	2050	6.76
400	**355 L**	1492	2560	96.7	96.7	96.2	0.82	730	3.2	7.9	2.9	81	96	▲ **1LE5604-3BB4■-■■■■**	2080	7.16
500	**355 L**	1491	3202	96.7	96.8	96.6	0.86	870	3.1	8.1	3.3	80	96	▲ **1LE5604-3BB5■-■■■■**	2290	8.36
6-pole: 1000 rpm at 50 Hz																
200	**315 L**	992	1925	96.3	96.4	96.1	0.82	365	3	7.5	3.2	68	83	▲ **1LE5604-3AC7■-■■■■**	1410	6.28
250	**315 L**	992	2407	96.5	96.6	96.3	0.81	460	3.2	8.2	3.3	69	84	▲ **1LE5604-3AC8■-■■■■**	1700	8.00
315	**355 M**	993	3029	96.6	96.6	96.1	0.82	570	2.9	7.8	3.2	75	90	▲ **1LE5604-3BC2■-■■■■**	2040	11.6
355	**355 M**	993	3414	96.6	96.7	96.3	0.83	640	2.9	8.4	3.3	74	89	▲ **1LE5604-3BC3■-■■■■**	2250	13.7
400	**355 L**	993	3847	96.6	96.7	96.5	0.84	710	2.8	8.1	3	75	90	▲ **1LE5604-3BC4■-■■■■**	2240	13.4
8-pole: 750 rpm at 50 Hz																
160	**315 L**	741	2062	95.1	95.5	95.5	0.79	305	2.5	6.3	2.5	67	82	▲ **1LE5604-3AD7■-■■■■**	1420	6.78
200	**315 L**	742	2574	95.4	95.6	95.3	0.78	390	2.7	6.7	2.9	72	87	▲ **1LE5604-3AD8■-■■■■**	1660	8.60

Voltages [1]		Version				Order code
50 Hz 400 VΔ/690 VY	60 Hz [1] 460 VΔ	**Standard**	3	4		–
50 Hz 500 VΔ		Without additional charge	4	0		–
50 Hz 690 VΔ		With additional charge	4	7		–
For other voltages [1] and more information, see from page 3/16			■	■		. . .
Types of construction		Version				Order code
Without flange	IM B3 [2]	**Standard**			A	–
With flange	IM B5 [2]	With additional charge			F	–
For other types of construction and more information, see from page 3/17					■	. . .
Motor protection		Version				Order code
PTC thermistor with 3 temperature sensors		**Standard**			B	–
For other motor protection and more information, see from page 3/19					■	. . .
Terminal box position		Version				Order code
Terminal box base left with terminal box 45°		Without additional charge			2	–
Terminal box base right with terminal box 45°		**Standard**			3	–
For other terminal box positions and more information, see from page 3/20					■	. . .

Special versions		Order code(s)
Forced-air cooled motors w/o ext. fan/fan cover (IC418)	**1LE5604-. . . . ■-■■■■-Z**	**F90+. . .+. . .+. . .**
For options, see from page 3/21	**1LE5604-. . . . ■-■■■■-Z**	**. . .+. . .+. . .+. . .**

[1] Parallel supply lines are required, except in the case of connection to 690 V.

[2] For a power rating of 315 kW, 2-pole, 60 Hz and 315 kW, 4-pole, 50 Hz, a larger terminal box can be used (order code **R50**) due to the magnitude of the current.
Order code **R50** alters the motor dimensions.

© Siemens AG 2018

Selection and ordering data

		Operating values at rated power												Cast-iron series 1LE5534 Basic Line Article No.		
P_{rated}	Frame size	n_{rated}	T_{rated}	η_{rated}, 4/4	η_{rated}, 3/4	η_{rated}, 2/4	cos-φ_{rated}, 4/4	I_{rated}	T_{LR}/T_{rated}	I_{LR}/I_{rated}	T_B/T_{rated}	L_{pfA}	L_{WA}		$m_{IM\ B3}$	J
kW	FS	rpm	Nm	%	%	%		A				dB(A)	dB(A)	▲ New	kg	kgm²
• Cooling: Self-ventilated (IC411) • Efficiency: IE4 Super Premium Efficiency, service factor (SF) 1.15 • Insulation: Thermal class 155 (temperature class F), IP55 degree of protection, utilization in accordance with thermal class 130 (temperature class B)																
2-pole: 3000 rpm at 50 Hz																
250	**315 L**	2982	801	96.5	96.6	96.4	0.91	410	2.6	7.5	3	80	95	▲ **1LE5534-3AA6■-■■■■**	1340	2.82
315	**315 L**	2980	1009	96.5	96.7	96.5	0.91	520	2.4	7.5	2.9	81	96	▲ **1LE5534-3AA7■-■■■■**	1490	3.11
4-pole: 1500 rpm at 50 Hz																
250	**315 L**	1488	1604	96.7	97	97	0.86	435	2.3	6.5	2.6	75	90	▲ **1LE5534-3AB6■-■■■■**	1520	5.09
315	**315 L**	1488	2022	96.7	96.9	96.8	0.85	550	2.2	7.2	2.8	75	90	▲ **1LE5534-3AB7■-■■■■**	1530	5.28
6-pole: 1000 rpm at 50 Hz																
200	**315 L**	992	1925	96.3	96.5	96.3	0.81	370	2.8	7	3	68	83	▲ **1LE5534-3AC7■-■■■■**	1410	6.28
250	**315 L**	992	2407	96.5	96.6	96.3	0.81	460	2.9	7.3	3	68	83	▲ **1LE5534-3AC8■-■■■■**	1640	8.10
8-pole: 750 rpm at 50 Hz																
160	**315 L**	741	2062	95.1	95.5	95.5	0.79	305	2.4	6.2	2.4	67	82	▲ **1LE5534-3AD7■-■■■■**	1420	6.78
200	**315 L**	742	2574	95.4	95.6	95.3	0.78	390	2.7	6.7	2.9	72	87	▲ **1LE5534-3AD8■-■■■■**	1660	8.60

Voltages [1]		Version						Order code
50 Hz 400 VΔ/690 VY	60 Hz [1] 460 VΔ	**Standard**	**3**	**4**				–
50 Hz 500 VΔ		Without additional charge	**4**	**0**				–
50 Hz 690 VΔ		With additional charge	**4**	**7**				–
For other voltages [1] and more information, see from page 3/16			■	■				. . .
Types of construction		Version						Order code
Without flange	IM B3 [2]	**Standard**			**A**			–
With flange	IM B5 [2]	With additional charge			**F**			–
For other types of construction and more information, see from page 3/17					■			. . .
Motor protection		Version						Order code
Without		**Standard**				**A**		–
PTC thermistor with 3 temperature sensors		With additional charge				**B**		–
For other motor protection and more information, see from page 3/19						■		. . .
Terminal box position		Version						Order code
Terminal box base left with terminal box 45°		Without additional charge					**2**	–
Terminal box base right with terminal box 45°		**Standard**					**3**	–
For other terminal box positions and more information, see from page 3/20							■	. . .

Special versions		Order code(s)
Forced-air cooled motors w/o ext. fan/fan cover (IC418)	**1LE5534-. . . . ■-■■■■**	**-Z F90+. . .+. . .+. . .**
For options and information, see from page 3/21	**1LE5534-. . . . ■-■■■■**	**-Z . . .+. . .+. . .+. . .**

[1] Parallel supply lines are required, except in the case of connection to 690 V.

[2] For a power rating of 315 kW, 2-pole, 60 Hz and 315 kW, 4-pole, 50 Hz, a larger terminal box can be used (order code **R50**) due to the magnitude of the current.
Order code **R50** alters the motor dimensions.

© Siemens AG 2018

Selection and ordering data

		Operating values at rated power												Cast-iron series 1LE5634 Performance Line Article No.		
P_{rated}	Frame size	n_{rated}	T_{rated}	$\eta_{rated,4/4}$	$\eta_{rated,3/4}$	$\eta_{rated,2/4}$	cos-$\varphi_{rated,4/4}$	I_{rated}	T_{LR}/T_{rated}	I_{LR}/I_{rated}	T_B/T_{rated}	L_{pfA}	L_{WA}		$m_{IM\ B3}$	J
kW	FS	rpm	Nm	%	%	%		A				dB(A)	dB(A)	▲ New	kg	kgm²
• **Cooling: Self-ventilated (IC411)** • **Efficiency: IE4 Super Premium Efficiency, service factor (SF) 1.15** • **Insulation: Thermal class 155 (temperature class F), IP55 degree of protection, utilization in accordance with thermal class 130 (temperature class B)**																
2-pole: 3000 rpm at 50 Hz																
250	**315 L**	2982	801	96.5	96.6	96.4	0.91	410	2.6	7.5	3	80	95	▲ **1LE5634-3AA6■-■■■■**	1340	2.82
315	**315 L**	2980	1009	96.5	96.7	96.5	0.91	520	2.4	7.5	2.9	81	96	▲ **1LE5634-3AA7■-■■■■**	1490	3.11
355	**355 M**	2984	1136	96.5	96.4	95.9	0.9	590	2.3	8.4	3.1	83	98	▲ **1LE5634-3BA3■-■■■■**	2170	5.09
400	**355 L**	2986	1279	96.5	96.5	96	0.91	660	2.3	7.7	3.1	83	98	▲ **1LE5634-3BA4■-■■■■**	2240	5.46
500	**355 L**	2988	1598	96.5	96.4	95.8	0.89	840	2.8	8.5	3.7	83	98	▲ **1LE5634-3BA5■-■■■■**	2340	5.76
4-pole: 1500 rpm at 50 Hz																
250	**315 L**	1488	1604	96.7	97	97	0.86	435	2.3	6.5	2.6	75	90	▲ **1LE5634-3AB6■-■■■■**	1520	5.09
315	**315 L**	1488	2022	96.7	96.9	96.8	0.85	550	2.2	7.2	2.8	75	90	▲ **1LE5634-3AB7■-■■■■**	1530	5.28
355	**355 M**	1491	2274	96.7	96.8	96.5	0.85	620	2.2	7.5	3.2	78	93	▲ **1LE5634-3BB3■-■■■■**	1960	6.26
400	**355 L**	1491	2562	96.7	96.9	96.6	0.85	700	2.3	7.3	3.2	79	95	▲ **1LE5634-3BB4■-■■■■**	2080	7.06
500	**355 L**	1491	3202	96.7	96.8	96.6	0.86	870	3.1	7.9	3.3	80	96	▲ **1LE5634-3BB5■-■■■■**	2290	8.36
6-pole: 1000 rpm at 50 Hz																
200	**315 L**	992	1925	96.3	96.5	96.3	0.81	370	2.8	7	3	68	83	▲ **1LE5634-3AC7■-■■■■**	1410	6.39
250	**315 L**	992	2407	96.5	96.6	96.3	0.81	460	2.9	7.3	3	68	83	▲ **1LE5634-3AC8■-■■■■**	1640	8.10
315	**355 M**	992	3032	96.6	96.9	96.9	0.86	550	2.4	6.8	2.8	75	90	▲ **1LE5634-3BC2■-■■■■**	2150	12.9
355	**355 M**	993	3414	96.6	96.7	96.4	0.84	630	2.6	7.4	3.2	76	91	▲ **1LE5634-3BC3■-■■■■**	2250	13.8
400	**355 L**	994	3843	96.6	96.7	96.5	0.84	710	2.7	7.7	2.9	75	90	▲ **1LE5634-3BC4■-■■■■**	2240	13.4
8-pole: 750 rpm at 50 Hz																
160	**315 L**	741	2062	95.1	95.5	95.5	0.79	305	2.4	6.2	2.4	67	82	▲ **1LE5634-3AD7■-■■■■**	1420	6.78
200	**315 L**	742	2574	95.4	95.6	95.3	0.78	390	2.7	6.7	2.9	72	87	▲ **1LE5634-3AD8■-■■■■**	1660	8.60

Voltages [1]		Version					Order code
50 Hz 400 VΔ/690 VY	60 Hz [1] 460 VΔ	**Standard**	**3**	**4**			–
50 Hz 500 VΔ		Without additional charge	**4**	**0**			–
50 Hz 690 VΔ		With additional charge	**4**	**7**			–
For other voltages [1] and more information, see from page 3/16			■	■			. . .

Types of construction		Version					Order code
Without flange	IM B3 [2]	**Standard**			**A**		–
With flange	IM B5 [2]	With additional charge			**F**		–
For other types of construction and more information, see from page 3/17					■		. . .

Motor protection	Version					Order code
PTC thermistor with 3 temperature sensors	**Standard**				**B**	–
For other motor protection and more information, see from page 3/19					■	. . .

Terminal box position	Version					Order code
Terminal box base left with terminal box 45°	Without additional charge				**2**	–
Terminal box base right with terminal box 45°	**Standard**				**3**	–
For other terminal box positions and more information, see from page 3/20					■	. . .

Special versions			Order code(s)
Forced-air cooled motors w/o ext. fan/fan cover (IC418)	**1LE5634-. . . .** ■-■■■■	**-Z**	**F90+. . .+. . .+. . .**
For options and information, see from page 3/21	**1LE5634-. . . .** ■-■■■■	**-Z**	**. . .+. . .+. . .+. . .**

[1] Parallel supply lines are required, except in the case of connection to 690 V.

[2] For a power rating of 315 kW, 2-pole, 60 Hz and 315 kW, 4-pole, 50 Hz, a larger terminal box can be used (order code **R50**) due to the magnitude of the current.
Order code **R50** alters the motor dimensions.

© Siemens AG 2018

Selection and ordering data (continued)

P_{rated}	Frame size	Operating values at rated power n_{rated}	T_{rated}	η_{rated}, 4/4	η_{rated}, 3/4	η_{rated}, 2/4	cos-φ_{rated}, 4/4	I_{rated}	T_{LR}/T_{rated}	I_{LR}/I_{rated}	T_B/T_{rated}	L_{pfA}	L_{WA}	Cast-iron series 1LE5503 Basic Line Article No.	$m_{IM\ B3}$	J
kW	FS	rpm	Nm	%	%	%		A				dB(A)	dB(A)	▲ New	kg	kgm²
• Cooling: Self-ventilated (IC411) • Efficiency according to IEC 60034-30: IE3 Premium Efficiency, service factor (SF) 1.15 • Insulation: Thermal class 155 (temperature class F), IP55 degree of protection, utilization in accordance with thermal class 130 (temperature class B)																
2-pole: 3000 rpm at 50 Hz																
250	**315 L**	2986	800	95.8	95.7	95	0.88	430	3	9.3	4.2	80	94	▲ **1LE5503-3AA6■-■■■■**	1340	2.82
315	**315 L**	2986	1007	95.8	95.6	94.8	0.87	550	3.5	9.9	4.2	81	96	▲ **1LE5503-3AA7■-■■■■**	1520	3.27
4-pole: 1500 rpm at 50 Hz																
250	**315 L**	1490	1602	96	96.1	95.7	0.85	440	2.8	7.9	3.2	75	91	▲ **1LE5503-3AB6■-■■■■**	1290	4.27
315	**315 L**	1490	2019	96	96	95.6	0.83	570	3.2	8.5	3.5	75	90	▲ **1LE5503-3AB7■-■■■■**	1560	5.39
6-pole: 1000 rpm at 50 Hz																
200	**315 L**	992	1925	95.8	95.9	95.6	0.82	365	3	7.5	3.2	68	83	▲ **1LE5503-3AC7■-■■■■**	1410	6.28
250	**315 L**	992	2407	95.8	95.9	95.6	0.81	465	3.2	8.2	3.3	69	84	▲ **1LE5503-3AC8■-■■■■**	1700	8.00
8-pole: 750 rpm at 50 Hz																
160	**315 L**	741	2062	94.3	94.7	94.7	0.79	310	2.5	6.3	2.5	67	82	▲ **1LE5503-3AD7■-■■■■**	1420	6.78
200	**315 L**	742	2574	94.6	94.8	94.5	0.78	390	2.7	6.7	2.9	72	87	▲ **1LE5503-3AD8■-■■■■**	1660	8.60

Voltages [1]		Version						Order code
50 Hz 400 VΔ/690 VY	60 Hz [1] 460 VΔ	**Standard**	**3**	**4**				–
50 Hz 500 VΔ		Without additional charge	**4**	**0**				–
50 Hz 690 VΔ		With additional charge	**4**	**7**				–
For other voltages [1] and more information, see from page 3/16			■	■				. . .
Types of construction		Version						Order code
Without flange	IM B3 [2]	**Standard**			**A**			–
With flange	IM B5 [2]	With additional charge			**F**			–
For other types of construction and more information, see from page 3/17					■			. . .
Motor protection		Version						Order code
Without		**Standard**				**A**		–
PTC thermistor with 3 temperature sensors		With additional charge				**B**		–
For other motor protection and more information, see from page 3/19						■		. . .
Terminal box position		Version						Order code
Terminal box base left with terminal box 45°		Without additional charge					**2**	–
Terminal box base right with terminal box 45°		**Standard**					**3**	–
For other terminal box positions and more information, see from page 3/20							■	. . .
Special versions								Order code(s)
For options, see from page 3/21								**1LE5503-. . . . ■-■■■■-Z** . . .+. . .+. . .+. . .

[1] Parallel supply lines are required, except in the case of connection to 690 V.

[2] For a power rating of 315 kW, 2-pole, 60 Hz and 315 kW, 4-pole, 50 Hz, a larger terminal box can be used (order code **R50**) due to the magnitude of the current.
Order code **R50** alters the motor dimensions.

© Siemens AG 2018

Selection and ordering data (continued)

P_{rated}	Frame size	Operating values at rated power n_{rated}	T_{rated}	η_{rated}, 4/4	η_{rated}, 3/4	η_{rated}, 2/4	cos-φ_{rated}, 4/4	I_{rated}	T_{LR}/T_{rated}	I_{LR}/I_{rated}	T_B/T_{rated}	L_{pfA}	L_{WA}	Cast-iron series 1LE5603 Performance Line Article No.	$m_{IM\ B3}$	J
kW	FS	rpm	Nm	%	%	%		A				dB(A)	dB(A)	▲ New	kg	kgm²
• Cooling: Self-ventilated (IC411) • Efficiency according to IEC 60034-30: IE3 Premium Efficiency, service factor (SF) 1.15 • Insulation: Thermal class 155 (temperature class F), IP55 degree of protection, utilization in accordance with thermal class 130 (temperature class B)																
2-pole: 3000 rpm at 50 Hz																
250	**315 L**	2986	800	95.8	95.6	95.0	0.88	430	3.0	9	4.2	80	94	▲ **1LE5603-3AA6■-■■■■**	1340	2.82
315	**315 L**	2986	1007	95.8	95.6	94.8	0.87	550	3.5	9.9	4.2	81	96	▲ **1LE5603-3AA7■-■■■■**	1520	3.27
355	**355 M**	2988	1135	95.8	95.6	94.8	0.89	600	2.6	8.9	4.0	84	99	▲ **1LE5603-3BA3■-■■■■**	2100	4.74
400	**355 L**	2986	1279	95.8	95.7	95.2	0.92	660	2.6	8.5	3.4	83	98	▲ **1LE5603-3BA4■-■■■■**	2240	5.36
500	**355 L**	2988	1598	95.8	95.7	95.1	0.89	850	3.0	8.9	3.8	84	98	▲ **1LE5603-3BA5■-■■■■**	2340	5.76
4-pole: 1500 rpm at 50 Hz																
250	**315 L**	1490	1602	96.0	96.1	95.7	0.85	440	2.8	7.9	3.2	75	91	▲ **1LE5603-3AB6■-■■■■**	1290	4.27
315	**315 L**	1490	2019	96.0	96.0	95.6	0.83	570	3.2	8.5	3.5	75	90	▲ **1LE5603-3AB7■-■■■■**	1560	5.39
355	**355 M**	1492	2272	96.0	96.0	95.4	0.86	620	2.9	7.9	2.8	81	96	▲ **1LE5603-3BB3■-■■■■**	2290	6.76
400	**355 L**	1492	2560	96.0	96.0	95.5	0.84	720	3.4	8.4	3.0	81	96	▲ **1LE5603-3BB4■-■■■■**	2110	7.16
500	**355 L**	1491	3202	96.0	96.1	95.9	0.86	870	3.0	8.1	3.3	82	96	▲ **1LE5603-3BB5■-■■■■**	2290	8.36
6-pole: 1000 rpm at 50 Hz																
200	**315 L**	992	1925	95.8	95.9	95.6	0.82	365	3	7.5	3.2	68	83	▲ **1LE5603-3AC7■-■■■■**	1410	6.28
250	**315 L**	992	2407	95.8	95.9	95.6	0.81	465	3.2	8.2	3.3	69	84	▲ **1LE5603-3AC8■-■■■■**	1700	8.00
315	**355 M**	993	3029	95.8	95.8	95.3	0.82	580	2.9	7.8	3.2	75	90	▲ **1LE5603-3BC2■-■■■■**	2040	11.6
355	**355 M**	993	3414	95.8	95.9	95.5	0.83	640	2.9	8.4	3.3	74	89	▲ **1LE5603-3BC3■-■■■■**	2250	13.7
400	**355 L**	994	3843	95.8	96	95.8	0.84	720	2.8	8.1	3	75	90	▲ **1LE5603-3BC4■-■■■■**	2240	13.4
8-pole: 750 rpm at 50 Hz																
160	**315 L**	741	2062	94.3	94.7	94.7	0.79	310	2.5	6.3	2.5	67	82	▲ **1LE5603-3AD7■-■■■■**	1420	6.78
200	**315 L**	742	2574	94.6	94.8	94.5	0.78	390	2.7	6.7	2.9	72	87	▲ **1LE5603-3AD8■-■■■■**	1660	8.60

Voltages [1]		Version					Order code
50 Hz 400 VΔ/690 VY	60 Hz [1] 460 VΔ	**Standard**	3	4			–
50 Hz 500 VΔ		Without additional charge	4	0			–
50 Hz 690 VΔ		With additional charge	4	7			–
For other voltages [1] and more information, see from page 3/16			■	■			. . .
Types of construction		Version					Order code
Without flange	IM B3 [2]	**Standard**			A		–
With flange	IM B5 [2]	With additional charge			F		–
For other types of construction and more information, see from page 3/17					■		. . .
Motor protection		Version					Order code
PTC thermistor with 3 temperature sensors		**Standard**				B	–
For other motor protection and more information, see from page 3/19						■	. . .
Terminal box position		Version					Order code
Terminal box base left with terminal box 45°		Without additional charge					2 –
Terminal box base right with terminal box 45°		**Standard**					3 –
For other terminal box positions and more information, see from page 3/20							■ . . .
Special versions							Order code(s)
For options, see from page 3/21							**1LE5603-. . . .** ■-■■■■ -Z . . .+. . .+. . .+. . .

[1] Parallel supply lines are required, except in the case of connection to 690 V.

[2] For a power rating of 315 kW, 2-pole, 60 Hz and 315 kW, 4-pole, 50 Hz, a larger terminal box can be used (order code **R50**) due to the magnitude of the current.
Order code **R50** alters the motor dimensions.

© Siemens AG 2018

Selection and ordering data (continued)

		Operating values at rated power												Cast-iron series 1LE5533 Basic Line Article No.		
P_{rated}	Frame size	n_{rated}	T_{rated}	η_{rated}, 4/4	η_{rated}, 3/4	η_{rated}, 2/4	cos-φ_{rated}, 4/4	I_{rated}	T_{LR}/T_{rated}	I_{LR}/I_{rated}	T_B/T_{rated}	L_{pfA}	L_{WA}		$m_{IM\ B3}$	J
kW	FS	rpm	Nm	%	%	%		A				dB(A)	dB(A)	▲ New	kg	kgm²
• Cooling: Self-ventilated (IC411) • Efficiency: IE3 Premium Efficiency, service factor (SF) 1.15 • Insulation: Thermal class 155 (temperature class F), IP55 degree of protection, utilization in accordance with thermal class 130 (temperature class B)																
2-pole: 3000 rpm at 50 Hz																
250	**315 L**	2982	801	95.8	95.9	95.6	0.91	415	2.8	7.2	3	80	94	▲ **1LE5533-3AA6■-■■■■**	1340	2.82
315	**315 L**	2980	1009	95.8	96	95.8	0.91	520	2.4	7.5	2.9	81	96	▲ **1LE5533-3AA7■-■■■■**	1490	3.11
4-pole: 1500 rpm at 50 Hz																
250	**315 L**	1490	1602	96	96.2	95.9	0.87	430	2.1	7.2	2.8	75	91	▲ **1LE5533-3AB6■-■■■■**	1400	4.55
315	**315 L**	1488	2022	96	96.2	96.1	0.85	560	2.2	7.2	2.8	75	90	▲ **1LE5533-3AB7■-■■■■**	1530	5.28
6-pole: 1000 rpm at 50 Hz																
200	**315 L**	992	1925	95.8	96	95.8	0.81	370	2.8	7	3	68	83	▲ **1LE5533-3AC7■-■■■■**	1410	6.39
250	**315 L**	992	2407	95.8	95.9	95.6	0.81	465	2.9	7.2	3	68	83	▲ **1LE5533-3AC8■-■■■■**	1640	8.10
8-pole: 750 rpm at 50 Hz																
160	**315 L**	741	2062	94.3	94.7	94.7	0.79	310	2.4	6.2	2.4	67	82	▲ **1LE5533-3AD7■-■■■■**	1420	6.78
200	**315 L**	742	2574	94.6	94.8	94.5	0.78	390	2.7	6.7	2.9	72	87	▲ **1LE5533-3AD8■-■■■■**	1660	8.60

Voltages [1]		Version						Order code
50 Hz 400 VΔ/690 VY	60 Hz [1] 460 VΔ	**Standard**	**3**	**4**				–
50 Hz 500 VΔ		Without additional charge	**4**	**0**				–
50 Hz 690 VΔ		With additional charge	**4**	**7**				–
For other voltages [1] and more information, see from page 3/16			■	■				. . .
Types of construction		Version						Order code
Without flange	IM B3 [2]	**Standard**			**A**			–
With flange	IM B5 [2]	With additional charge			**F**			–
For other types of construction and more information, see from page 3/17					■			. . .
Motor protection		Version						Order code
Without		**Standard**				**A**		–
PTC thermistor with 3 temperature sensors		With additional charge				**B**		–
For other motor protection and more information, see from page 3/19						■		. . .
Terminal box position		Version						Order code
Terminal box base left with terminal box 45°		Without additional charge					**2**	–
Terminal box base right with terminal box 45°		**Standard**					**3**	–
For other terminal box positions and more information, see from page 3/20							■	. . .
Special versions								Order code(s)
Forced-air cooled motors w/o ext. fan/fan cover (IC418)		**1LE5533-. . . . ■-■■■■**					**-Z**	**F90+. . .+. . .+. . .**
For options and information, see from page 3/21		**1LE5533-. . . . ■-■■■■**					**-Z**	**. . .+. . .+. . .+. . .**

[1] Parallel supply lines are required, except in the case of connection to 690 V.

[2] For a power rating of 315 kW, 2-pole, 60 Hz and 315 kW, 4-pole, 50 Hz, a larger terminal box can be used (order code **R50**) due to the magnitude of the current.
Order code **R50** alters the motor dimensions.

© Siemens AG 2018

Selection and ordering data (continued)

P_{rated}	Frame size	Operating values at rated power n_{rated}	T_{rated}	η_{rated}, 4/4	η_{rated}, 3/4	η_{rated}, 2/4	cos-φ_{rated}, 4/4	I_{rated}	T_{LR}/T_{rated}	I_{LR}/I_{rated}	T_B/T_{rated}	L_{pfA}	L_{WA}	Cast-iron series 1LE5633 Performance Line Article No.	$m_{IM\ B3}$	J
kW	FS	rpm	Nm	%	%	%		A				dB(A)	dB(A)	▲ New	kg	kgm²
• Cooling: Self-ventilated (IC411) • Efficiency: IE3 Premium Efficiency, service factor (SF) 1.15 • Insulation: Thermal class 155 (temperature class F), IP55 degree of protection, utilization in accordance with thermal class 130 (temperature class B)																
2-pole: 3000 rpm at 50 Hz																
250	**315 L**	2982	801	95.8	95.9	95.6	0.91	415	2.8	7.2	3	80	94	▲ **1LE5633-3AA6■-■■■■**	1340	2.82
315	**315 L**	2980	1009	95.8	96	95.8	0.91	520	2.4	7.5	2.9	81	96	▲ **1LE5633-3AA7■-■■■■**	1490	3.11
355	**355 M**	2984	1136	95.8	95.7	95.2	0.9	590	2.3	8.4	3.1	83	98	▲ **1LE5633-3BA3■-■■■■**	2170	5.07
400	**355 L**	2986	1279	95.8	95.8	95.3	0.91	660	2.3	7.7	3.1	83	98	▲ **1LE5633-3BA4■-■■■■**	2240	5.46
500	**355 L**	2988	1598	95.8	95.7	95.1	0.89	850	2.8	8.5	3.7	83	98	▲ **1LE5633-3BA5■-■■■■**	2340	5.76
4-pole: 1500 rpm at 50 Hz																
250	**315 L**	1490	1602	96	96.2	95.9	0.87	430	2.1	7.2	2.8	75	91	▲ **1LE5633-3AB6■-■■■■**	1400	4.55
315	**315 L**	1488	2022	96	96.2	96.1	0.85	560	2.2	7.2	2.8	75	90	▲ **1LE5633-3AB7■-■■■■**	1530	5.28
355	**355 M**	1491	2274	96	96.1	95.8	0.88	610	2.2	7.5	3.1	81	95	▲ **1LE5633-3BB3■-■■■■**	2070	6.36
400	**355 L**	1491	2562	96	96.1	95.9	0.87	690	2.1	7.3	3	80	95	▲ **1LE5633-3BB4■-■■■■**	2100	7.06
500	**355 L**	1491	3202	96	96.1	95.9	0.86	870	3.1	7.9	3.3	80	96	▲ **1LE5633-3BB5■-■■■■**	2290	8.36
6-pole: 1000 rpm at 50 Hz																
200	**315 L**	992	1925	95.8	96	95.8	0.81	370	2.8	7	3	68	83	▲ **1LE5633-3AC7■-■■■■**	1410	6.39
250	**315 L**	992	2407	95.8	95.9	95.6	0.81	465	2.9	7.2	3	68	83	▲ **1LE5633-3AC8■-■■■■**	1640	8.10
315	**355 M**	992	3032	95.8	96.1	96.1	0.86	550	2.4	6.8	2.8	75	90	▲ **1LE5633-3BC2■-■■■■**	2150	12.9
355	**355 M**	993	3414	95.8	95.9	95.6	0.84	640	2.6	7.4	3.2	76	91	▲ **1LE5633-3BC3■-■■■■**	2250	13.8
400	**355 L**	994	3843	95.8	96	95.8	0.84	720	2.7	7.7	2.9	75	90	▲ **1LE5633-3BC4■-■■■■**	2240	13.4
8-pole: 750 rpm at 50 Hz																
160	**315 L**	741	2062	94.3	94.7	94.7	0.79	310	2.4	6.2	2.4	67	82	▲ **1LE5633-3AD7■-■■■■**	1420	6.78
200	**315 L**	742	2574	94.6	94.8	94.5	0.78	390	2.7	6.7	2.9	72	87	▲ **1LE5633-3AD8■-■■■■**	1660	8.60

Voltages [1]		Version			Order code
50 Hz 400 VΔ/690 VY	60 Hz [1] 460 VΔ	**Standard**	3	4	–
50 Hz 500 VΔ		Without additional charge	4	0	–
50 Hz 690 VΔ		With additional charge	4	7	–
For other voltages [1] and more information, see from page 3/16			■	■	. . .

Types of construction		Version			Order code
Without flange	IM B3 [2]	**Standard**	A		–
With flange	IM B5 [2]	With additional charge	F		–
For other types of construction and more information, see from page 3/17			■		. . .

Motor protection	Version		Order code
PTC thermistor with 3 temperature sensors	**Standard**	B	–
For other motor protection and more information, see from page 3/19		■	. . .

Terminal box position	Version		Order code
Terminal box base left with terminal box 45°	Without additional charge	2	–
Terminal box base right with terminal box 45°	**Standard**	3	–
For other terminal box positions and more information, see from page 3/20		■	. . .

Special versions		Order code(s)
Forced-air cooled motors w/o ext. fan/fan cover (IC418)	**1LE5633-. . . . ■-■■■■**	-Z F90+. . .+. . .+. . .
For options and information, see from page 3/21	**1LE5633-. . . . ■-■■■■**	-Z . . .+. . .+. . .+. . .

[1] Parallel supply lines are required, except in the case of connection to 690 V.

[2] For a power rating of 315 kW, 2-pole, 60 Hz and 315 kW, 4-pole, 50 Hz, a larger terminal box can be used (order code **R50**) due to the magnitude of the current.
Order code **R50** alters the motor dimensions.

© Siemens AG 2018

Selection and ordering data

Voltages	Article No. supplement			Frame size		Motor version	
	Voltage code 12th and 13th position of the Article No.		Additional identification code with order code and plain text, if required	315	355	IEC	IE4
				1LE55.4 Basic Line			
				1LE56.4 Performance Line			
				1LE55.3 Basic Line			IE3
1LE5 . . . - . . . . ■ - ■ . . .			Order code	1LE56.3 Performance Line			
Voltage at 50 Hz or 60 Hz							
50 Hz 400 VΔ/690 VY, 60 Hz 460 VΔ	**3**	**4**	–	□	□		
50 Hz 400 VΔ, 60 Hz 460 VΔ				□	□		
50 Hz 500 VΔ, 60 Hz 575 VΔ	**4**	**0**	–	○	○		
50 Hz 690 VΔ	**4**	**7**	–	✓	✓		
50 Hz 380 VΔ/660 VY, 60 Hz 440 VΔ	**3**	**3**	–	✓	✓		
50 Hz 380 VΔ				✓	✓		
50 Hz 415 VΔ, 60 Hz 480 VΔ	**3**	**5**	–	✓	✓		
60 Hz 380 VΔ/660 VY	**3**	**0**	–	✓	✓		
60 Hz 380 VΔ				✓	✓		
60 Hz 400 VΔ/690 VY	**3**	**1**	–	✓	✓		
60 Hz 400 VΔ				✓	✓		
Voltage at 60 Hz and required power							
380 VΔ/660 VY; 50 Hz power	**9**	**0**	**M2B**	✓	✓		
380 VΔ; 50 Hz power				✓	✓		
440 VΔ; 50 Hz power	**9**	**0**	**M2D**	✓	✓		
460 VΔ; 50 Hz power	**9**	**0**	**M2F**	✓	✓		
575 VΔ; 50 Hz power	**9**	**0**	**M2H**	✓	✓		
400 VΔ/690 VY; 50 Hz power	**9**	**0**	**M2J**	✓	✓		
400 VΔ; 50 Hz power				✓	✓		
480 VΔ; 50 Hz power	**9**	**0**	**M2L**	✓	✓		
Non-standard voltage and/or frequencies							
Non-standard winding [1]	**9**	**0**	**M1Y** • and customer specifications	✓	✓		

□ Standard version
○ Without additional charge
• This order code only determines the price of the version – Additional plain text is required.
✓ With additional charge

[1] Plain text must be specified in the order: Voltage between 200 and 690 V (voltages outside this range are available on request), frequency, circuit, for 60 Hz additionally required rated power in kW.

© Siemens AG 2018

Selection and ordering data

Types of construction		Article No. supplement		Frame size		Motor version	
		Type of construction code letter 14th position of the Article No.	For types of construction with order code(s) Article No. with additional identification code **-Z**	**315**	**355**		
				1LE55.4 Basic Line		IEC	IE4
				1LE56.4 Performance Line			
				1LE55.3 Basic Line			IE3
				1LE56.3 Performance Line			
1LE5 . . . - . . . . . - . ■ . . (-Z)		■ . .	Order code				
Without flange							
IM B3 [1) 2)]		**A**	**–**	□	□		
IM B6 [2)]	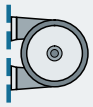	**T**	**–**	○	○		
IM B7 [2)]	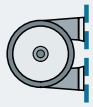	**U**	**–**	○	○		
IM B8 [2)]		**V**	**–**	○	○		
IM V6 [2)]		**D**	**–**	○	○		
IM V5 without protective cover [2)]		**C**	**–**	○	○		
IM V5 with protective cover [2) 3) 4)]	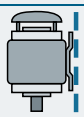	**C**	**H00**	✓	✓		

For legends and footnotes, see page 3/18.

© Siemens AG 2018

Types of construction · Cast-iron series 1LE55 Basic Line, 1LE56 Performance Line

Types of construction		Article No. supplement		Frame size		Motor version	
		Type of construction code letter 14th position of the Article No.	For types of construction with order code(s) Article No. with additional identification code **-Z**	**315**	**355**		
				1LE55.4 Basic Line		IEC	IE4
				1LE56.4 Performance Line			
				1LE55.3 Basic Line			IE3
				1LE56.3 Performance Line			
1LE5 . . . - . . . . . - . ■ . . (-Z)			Order code				
With flange		**EN 50347 DIN 42948**		**FF600 A 660**	**FF600 A 660**		
IM B5 [2) 5)]	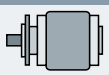	**F**	**–**	✓	✓		
IM V1 without protective cover [2)]		**G**	**–**	✓	✓		
IM V1 with protective cover [2) 3) 4)]	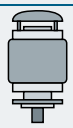	**G**	**H00**	✓	✓		
IM V3 [4)]		**H**	**–**	✓	✓		
IM B35 [3)]	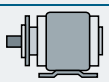	**J**	**–**	✓	✓		

□ Standard version
○ Without additional charge
✓ With additional charge

1) The types of construction IM B6/7/8, IM V6 and IM V5 with/without protective cover are also possible as long as no stamping of these types of construction on the rating plate is required. As standard the type of construction IM B3 is then stamped on the rating plate. With type of construction IM V5 with protective cover, the protective cover has to be additionally ordered with order code **H00**. The protective cover is not stamped on the rating plate.

2) The type of construction is stamped on the rating plate. If mounted in a different position, the position must be specified to ensure that the condensation drainage holes are positioned correctly.

3) In combination with an encoder, it is not necessary to order the protective cover (order code **H00**), as this is delivered as a protection for the encoder as standard. In this case the protective cover is standard design (without additional charge).

4) The "Standard cylindrical shaft extension (second shaft extension)" option (order code **L05**) is not possible.

5) The types of construction IM V3 and IM V1 with/without protective cover are also possible as long as no stamping of these types of construction on the rating plate is required. As standard the type of construction IM B5 is then stamped on the rating plate. With type of construction IM V1 with protective cover, the protective cover has to be additionally ordered with order code **H00**. The protective cover is not stamped on the rating plate.

© Siemens AG 2018

Selection and ordering data

Motor protection	Article No. supplement		Frame size		Motor version	
	Motor protection code letter 15th position of the Article No.	Additional identification code with order code and plain text, if required	**315**	**355**		
			1LE55.4 Basic Line		IEC	IE4
			1LE56.4 Performance Line			
			1LE55.3 Basic Line			IE3
1LE5 . . . - . . . . . - . . ■ .		Order code	**1LE56.3 Performance Line**			
Motor protection						
Without (standard) [1]	**A**	**–**	□	□	Only for:	1LE55.4, 1LE55.3
1 or 3 PTC thermistors – for tripping (2 terminals) [1] [2]	**B**	**–**	✓	✓	Only for:	1LE55.4, 1LE55.3
			□	□	Only for:	1LE56.4, 1LE56.3
2 or 6 PTC thermistors – for alarm and tripping (4 terminals) [2]	**C**	**–**	✓	✓		
1 KTY84-130 temperature sensor (2 terminals) [2]	**F**	**–**	✓	✓		
2 KTY84-130 temperature sensor (4 terminals) [2]	**G**	**–**	✓	✓		
3 Pt100 resistance thermometers – 2-wire input (6 terminals)	**H**	**–**	✓	✓		
6 Pt100 resistance thermometers – 2-wire input (12 terminals)	**J**	**–**	✓	✓		
1 Pt1000 resistance thermometer (2 terminals) [2]	**K**	**–**	✓	✓		
2 Pt1000 resistance thermometers (4 terminals) [2]	**L**	**–**	✓	✓		
1 Pt100 resistance thermometers – 2-wire input (2 terminals) [2]	**P**	**–**	✓	✓		
3 Pt100 resistance thermometers – 3-wire input (9 terminals) [2]	**Q**	**–**	✓	✓		
6 Pt100 resistance thermometers – 3-wire input (18 terminals) [2]	**R**	**–**	✓	✓		
3 bimetal sensors (NC contacts) – for tripping (2 terminals) [2]	**Z**	**Q3A**	✓	✓		
6 bimetal sensors (NC contacts) for alarm and tripping (4 terminals) [2]	**Z**	**Q9A**	✓	✓		

□ Standard version
✓ With additional charge

Note:

Options are available specifically for bearing protection – for order codes and descriptions, see from page 3/21.

[1] For the Performance Line, motor protection by means of PTC thermistors with 3 built-in temperature sensors for tripping (motor protection code letter B) is already included in the basic price. For the Performance Line, the option "without motor protection" (motor protection code letter A) is not possible.

[2] Evaluation with associated tripping unit (see Catalog IC 10) is recommended.

© Siemens AG 2018

Terminal box position · Cast-iron series 1LE55 Basic Line, 1LE56 Performance Line

Selection and ordering data

Terminal box position	Article No. supplement		Frame size		Motor version	
	Terminal box position code 16th position of the Article No.	Additional identification code with order code and plain text, if required	**315**	**355**	IEC	IE4
			1LE55.4 Basic Line			IE3
			1LE56.4 Performance Line			
			1LE55.3 Basic Line			
			1LE56.3 Performance Line			
1LE5 . . . - . . . . . - . . . ■		Order code				
Terminal box position						
Terminal box base left with terminal box at the top	**0**	–	✓	✓		
Terminal box base right with terminal box at the top	**1**	–	✓	✓		
Terminal box base left with oblique terminal box 45°	**2**	–	○	○		
Terminal box base right with oblique terminal box 45°	**3**	–	□	□		
Terminal box right-hand side [1]	**5**	–	✓	✓		
Terminal box left-hand side [1]	**6**	–	✓	✓		
Terminal box left-hand side (base below) [2]	**9**	**R5L**	✓	✓		
Terminal box right-hand side (base below) [2]	**9**	**R6R**	✓	✓		
Terminal box bottom left [2]	**9**	**R7L**	✓	✓		
Terminal box bottom right [2]	**9**	**R7R**	✓	✓		

□ Standard version
○ Without additional charge
✓ With additional charge

[1] For types of construction with feet and flange-mounted with feet, cast feet are standard. Screwed-on feet are available on request.

[2] Only possible in combination with type of construction IM B5.

© Siemens AG 2018

Selection and ordering data

Special versions	Additional identification code **-Z** with order code and plain text if required	Frame size 315	Frame size 355	Motor version IEC	Motor version IE4 / IE3	
		1LE55.4 Basic Line		IEC	IE4	
		1LE56.4 Performance Line				
		1LE55.3 Basic Line			IE3	
1LE5 . . . - . . . . . - . . . . -Z	Order code	**1LE56.3 Performance Line**				
Motor protection						
1 or 3 PTC thermistors – for tripping (2 terminals) [1]	**Q11**	✓	✓	Not for:	Combination with motor protection code letter B (15th position of the Article No.)	
2 or 6 PTC thermistors – for alarm and tripping (4 terminals) [1]	**Q12**	✓	✓	Not for:	Combination with motor protection code letter C (15th position of the Article No.)	
1 KTY84-130 temperature sensor (2 terminals) [1]	**Q23**	✓	✓	Not for:	Combination with motor protection code letter F (15th position of the Article No.)	
2 KTY84-130 temperature sensors (4 terminals) [1]	**Q25**	✓	✓	Not for:	Combination with motor protection code letter G (15th position of the Article No.)	
3 bimetal sensors (NC contacts) for tripping (2 terminals)	**Q31**	✓	✓			
6 bimetal sensors (NC contacts) for alarm and tripping (4 terminals)	**Q32**	✓	✓			
3 bimetal sensors (NC contacts) for tripping (6 terminals)	**Q33**	✓	✓			
6 bimetal sensors (NC contacts) for alarm and tripping (12 terminals)	**Q34**	✓	✓			
1 Pt1000 resistance thermometer (2 terminals)	**Q35**	✓	✓			
2 Pt1000 resistance thermometers (4 terminals)	**Q36**	✓	✓			
3 Pt100 resistance thermometers – 2-wire input (6 terminals) [1]	**Q60**	✓	✓	Not for:	Combination with motor protection code letter H (15th position of the Article No.)	
6 Pt100 resistance thermometers – 2-wire input (12 terminals) [23]	**Q61**	✓	✓	Not for:	Combination with motor protection code letter J (15th position of the Article No.)	
1 Pt100 resistance thermometer – 2-wire input (2 terminals)	**Q62**	✓	✓			
3 Pt100 resistance thermometers – 3-wire input (9 terminals)	**Q63**	✓	✓			
6 Pt100 resistance thermometers – 3-wire input (18 terminals)	**Q64**	✓	✓			
2 Pt100 screw-in thermometers in basic configuration for bearings (2 terminals)	**Q72**	✓	✓			
2 Pt100 screw-in thermometers in 3-wire input for bearing (6 terminals)	**Q78**	✓	✓			
2 Pt100 double screw-in thermometers in 3-wire input for bearing (12 terminals)	**Q79**	✓	✓			
Motor connection and terminal box						
Terminal box on NDE [23]	**H08**	✓	✓			
Second external grounding	**H70**	✓	✓			
Rotation of the terminal box through 90°, entry from DE	**R10**	✓	✓	Not for:	Combination with type of construction code letters F, G, H, J (14th position of the Article No.)	
Rotation of the terminal box through 90°, entry from NDE	**R11**	✓	✓			

For legends and footnotes, see page 3/27.

© Siemens AG 2018

Options · Cast-iron series 1LE55 Basic Line, 1LE56 Performance Line

Special versions	Additional identification code **-Z** with order code and plain text if required	Frame size 315	Frame size 355	Motor version IEC	Motor version IE4 / IE3
		1LE55.4 Basic Line			IE4
		1LE56.4 Performance Line			
		1LE55.3 Basic Line			IE3
1LE5 . . . - . . . . . - . . . . -Z	Order code	1LE56.3 Performance Line			
Motor connection and terminal box (continued)					
Rotation of the terminal box through 180°	**R12**	✓	✓		
One EMC cable gland	**R14**	✓	✓	Only for:	Combination with order codes R51, R53
One metal cable gland	**R15**	✓	✓	Only for:	Combination with order codes R51, R53
EMC cable gland, maximum configuration	**R16**	✓	✓	Only for:	Combination with order codes R51, R53
Stud terminal for cable connection, accessories pack (3 items)	**R17**	✓	–	Only for:	Combination with order codes R51, R53
Metal cable gland, maximum configuration	**R18**	✓	✓	Only for:	Combination with order codes R51, R53
Saddle terminal for connection without cable lug, accessories pack	**R19**	✓	✓	Only for:	Combination with order codes R21, R23, R24
3 cables protruding, 1.5 m long	**R21**	O. R.	O. R.	Only for:	Combination with order codes R17, R19, R50
6 cables protruding, 1.5 m long	**R23**	O. R.	O. R.	Only for:	Combination with order codes R17, R19, R50
6 cables protruding, 3 m long	**R24**	O. R.	O. R.	Only for:	Combination with order codes R17, R19, R50
Larger terminal box	**R50**	✓	–	Only for:	Combination with order codes R21, R23, R24
Terminal box without cable entry opening	**R51**	O	O	Only for:	Combination with order codes R14, R15, R16, R18
Drilled removable entry plate	**R52**	✓	✓		
Undrilled removable entry plate	**R53**	✓	✓	Only for:	Combination with order codes R14, R15, R16, R18
Cast-iron auxiliary terminal box (small)	**R62**	✓	✓		
Larger cast-iron terminal box	**R63**	✓	✓		
Silicone-free version	**R74**	✓	✓		
Non-standard threaded through hole (NPT or G thread) [2]	**Y61 •** and customer specifications	✓	✓		
Windings and insulation					
Temperature class 155 (F), utilized according to 155 (F), with service factor	**N01**	✓	✓		
Temperature class 155 (F), utilized acc. to 155 (F), with increased power	**N02**	✓	✓		
Temperature class 155 (F), utilized acc. to 155 (F), with increased coolant temperature	**N03**	✓	✓		
Temperature class 155 (F), utilized acc. to 130 (B), coolant temperature 45 °C, derating approx. 4 %	**N05**	✓	✓		
Temperature class 155 (F), utilized acc. to 130 (B), coolant temperature 50 °C, derating approx. 8 %	**N06**	✓	✓		
Temperature class 155 (F), utilized acc. to 130 (B), coolant temperature 55 °C, derating approx. 13 %	**N07**	✓	✓		
Temperature class 155 (F), utilized acc. to 130 (B), coolant temperature 60 °C, derating approx. 18 %	**N08**	✓	✓		
Temperature class 180 (H)	**N10**	✓	✓		
Temperature class 180 (H) at rated power and max. CT 60 °C [3] [4]	**N11**	✓	✓		
Increased air humidity/temperature with 30 to 60 g water per m^3 of air	**N30**	✓	✓		
Increased air humidity/temperature with 60 to 100 g water per m^3 of air	**N31**	✓	✓		
Temperature class 155 (F), utilized acc. to 130 (B), with higher coolant temperature and/or installation altitude	**Y50 •** and spec. power, CT .. °C or IA .... m above sea level	✓	✓		
Temperature class 155 (F), utilized acc. to 155 (F), other requirements [4]	**Y52 •** and spec. power, CT .. °C or IA .... m above sea level	✓	✓		
Temperature class 180 (H), utilized according to 155 (F)	**Y75 •** and spec. power, CT .. °C or IA .... m above sea level	✓	✓		

For legends and footnotes, see page 3/27.

© Siemens AG 2018

Options · Cast-iron series 1LE55 Basic Line, 1LE56 Performance Line

Special versions	Additional identification code **-Z** with order code and plain text if required	Frame size 315	Frame size 355	Motor version	
		1LE55.4 Basic Line		IEC	IE4
		1LE56.4 Performance Line			
		1LE55.3 Basic Line			IE3
1LE5 . . . -. . . . . -. . . . -Z	Order code	1LE56.3 Performance Line			
Colors and paint finish					
Standard paint finish C2 in RAL 7030 stone gray		□	–	Only for:	Basic Line
Unpainted (only cast-iron parts primed)	**S00**	○	○		
Unpainted, only primed	**S01**	✓	✓		
Special paint finish C3		□	□	Only for:	Performance Line
	S02	✓	–	Only for:	Basic Line
Special paint finish sea air resistant C4	**S03**	✓	✓		
Special paint finish for use offshore C5	**S04**	✓	✓		
Internal coating	**S05**	✓	✓		
Top coat polyurethane [27]	**S06**	✓	✓		
Paint finish in other standard RAL colors: RAL 1002, 1013, 1015, 1019, 2003, 2004, 3000, 3007, 5002, 5007, 5009, 5010, 5012, 5015, 5017, 5018, 5019, 6011, 6019, 6021, 7000, 7001, 7004, 7011, 7016, 7022, 7031, 7032, 7033, 7035, 9001, 9002, 9005 (see Catalog Section 1 "Introduction")	**Y53 •** and paint finish RAL….	✓	✓		
Paint finish in special RAL colors: For RAL colors, see "Special paint finish in special RAL colors" (see Catalog Section 1 "Introduction")	**Y56 •** and paint finish RAL….	✓	✓		
Modular technology – Basic versions [5]					
Mounting of holding brake (standard assignment) [6] [25] [26]	**F01**	✓	✓	Only for:	4-pole motors
		–	–	Only for:	Combination with order codes D02, F40, F41, L05, L30, L52
Mounting of separately driven fan	**F70**	✓	✓	Not for:	Combination with order codes L05, Y59
Mounting of 1XP8012-10 (HTL) rotary pulse encoder [7] [8]	**G01**	✓	✓	Not for:	Combination with order codes D02, L05
Mounting of 1XP8012-20 (TTL) rotary pulse encoder [7] [8]	**G02**	✓	✓	Not for:	Combination with order codes D02, L05
Mounting of Kübler Sendix 5020 HTL, 1024 I rotary pulse encoder	**G11**	✓	✓	Not for:	Combination with order codes D02, L05
Mounting of Kübler Sendix 5020 TTL, 1024 I rotary pulse encoder	**G12**	✓	✓	Not for:	Combination with order codes D02, L05
Modular technology – Additional versions					
Brake supply voltage 24 V DC	**F10**	✓	✓	Only for:	4-pole motors
		–	–	Only for:	Combination with order codes D02, F40, F41, L05, L30, L52
Brake supply voltage 230 V AC, 50/60 Hz	**F11**	✓	✓	Only for:	4-pole motors
		–	–	Only for:	Combination with order codes D02, F40, F41, L05, L30, L52
Brake supply voltage 400 V AC, 50/60 Hz	**F12**	✓	✓	Only for:	4-pole motors
		–	–	Only for:	Combination with order codes D02, F40, F41, L05, L30, L52
Backstop, counterclockwise motion blocked, clockwise direction of rotation	**F40**	✓	✓	Not for:	Combination with order codes F01, F10, F11, F12
Backstop, clockwise motion blocked, counterclockwise direction of rotation	**F41**	✓	✓	Not for:	Combination with order codes F01, F10, F11, F12

For legends and footnotes, see page 3/27.

© Siemens AG 2018

Options · Cast-iron series 1LE55 Basic Line, 1LE56 Performance Line

Special versions	Additional identification code **-Z** with order code and plain text if required	Frame size 315	Frame size 355	Motor version	
		1LE55.4 Basic Line		IEC	IE4
		1LE56.4 Performance Line			
		1LE55.3 Basic Line			IE3
1LE5 . . . - . . . . . - . . . . -Z	Order code	1LE56.3 Performance Line			
Special technology [5]					
Mounting of LL 861 900 220 rotary pulse encoder [9]	**G04**	✓	✓	Not for:	Combination with order codes D02, L05
Mounting of HOG 9 DN 1024 I rotary pulse encoder [9]	**G05**	✓	✓	Not for:	Combination with order codes D02, L05
Mounting of HOG 10 D 1024 I rotary pulse encoder [9]	**G06**	✓	✓	Not for:	Combination with order codes D02, L05
Mounting of POG10D rotary pulse encoder (only in combination with separately driven fan or brake) [10]	**G07**	✓	✓	Not for:	Combination with order codes D02, L05
Mounting of POG9 rotary pulse encoder (only in combination with separately driven fan or brake) [10]	**G08**	✓	✓	Not for:	Combination with order codes D02, L05
Mounting of HOG 10 DN 1024 I rotary pulse encoder, terminal box moisture protection	**G15**	✓	✓	Not for:	Combination with order codes D02, L05
Mounting of HOG 10 DN 1024 I rotary pulse encoder, terminal box dust protection	**G16**	✓	✓	Not for:	Combination with order codes D02, L04, L05
Mounting of rotary pulse encoder HOG 10 DN 1024 I + FSL, (integrated centrifugal switch, speed ... rpm), terminal box moisture protection	**Y74 •** and spec. speed .... rpm	✓	✓	Not for:	Combination with order codes D02, L05
Mounting of rotary pulse encoder HOG 10 DN 1024 I + FSL, (integrated centrifugal switch, speed .... rpm), terminal box dust protection	**Y76 •** and spec. speed .... rpm	✓	✓	Not for:	Combination with order codes D02, L05
Mounting of rotary pulse encoder HOG 10 DN 1024 I + ESL 93, (integrated electronic speed switch, speed .... rpm), terminal box dust protection	**Y79 •** and spec. speed (max 3) .... rpm	✓	✓	Not for:	Combination with order codes D02, L05
Mechanical version and degrees of protection					
Low-noise version for 2-pole motors with clockwise direction of rotation	**F77**	✓	✓	Only for:	2-pole motors
		–	–	Only for:	Combination with order codes L05, F90
Low-noise version for 2-pole motors with counterclockwise direction of rotation	**F78**	✓	✓	Only for:	2-pole motors
		–	–	Only for:	Combination with order codes L05, F90
Prepared for mountings with D12 shaft	**G41**	✓	✓	Not for:	Combination with order codes D02, L05
Prepared for mountings with D16 shaft	**G42**	✓	✓	Not for:	Combination with order code L05
Mechanical protection for encoder	**G43**	✓	✓	Not for:	Combination with order code L05
Protective cover [7] [9] [11]	**H00**	✓	✓	Not for:	Combination with order code L05
Vibration-proof version; vibration resistance to Class 3M4 according to IEC 60721-3-3:1994	**H02**	✓	✓		
Condensation drainage holes		□	□		
Rust-resistant screws (externally)	**H07**	✓	✓		
IP65 degree of protection [13]	**H20**	✓	✓		
IP54 degree of protection	**H21**	✓	✓		
IP56 degree of protection [14]	**H22**	✓	✓		
Drive-end seal for flange-mounting motors, oil-tight to 0.1 bar [12] [24]	**H23**	✓	✓	Not for:	Combination with type of construction code letters T, U, V (14th position of the Article No.)
Viton sealing ring	**H25**	✓	✓	Not for:	Combination with order codes D02, D03, D04
Grounding brush for converter operation	**L52**	✓	✓	Not for:	Combination with order codes F01, F10, F11, F12

For legends and footnotes, see page 3/27.

© Siemens AG 2018

Special versions	Additional identification code **-Z** with order code and plain text if required		Frame size **315**	**355**	Motor version	
			1LE55.4 Basic Line		IEC	IE4
			1LE56.4 Performance Line			
			1LE55.3 Basic Line			IE3
1LE5 . . . - . . . . . - . . . . -Z	Order code		**1LE56.3 Performance Line**			
Coolant temperature and installation altitude						
Coolant temperature –50 to +40 °C	**D02**		✓	✓	Not for:	Combination with order codes F01, F10, F11, F12, G01, G02, G04, G05, G06, G07, G11, G12, G15, G16; H25, Y74, Y76, Y79
Coolant temperature –40 to +40 °C [15]	**D03**		✓	✓	Not for:	Combination with order code H25
Coolant temperature –30 to +40 °C [16]	**D04**		✓	✓	Not for:	Combination with order code H25
Versions in accordance with standards and specifications						
Motor without CE marking for export outside EEA (see EU Directive 640/2009)	**D22**		○	○		
Motor exclusively for use in transportation equipment for passenger and freight transportation corresponding to EVPG §1 dated February 27, 2008	**D23**		○	○		
Electrical according to NEMA MG1-12 [17]	**D30**		✓	✓		
Design according to UL with "Recognition Mark" [17]	**D31**		✓	✓	Only for:	1LE5504, 1LE5604, 1LE5503, 1LE5603
Canadian regulations (CSA) [6]	**D40**		✓	✓	Only for:	1LE5504, 1LE5604, 1LE5503, 1LE5603
TR CU product safety certificate EAC for Eurasian customs union	**D47**		✓	✓		
Bearings and lubrication						
Regreasing device with M10 × 1 grease nipple according to DIN 71412-A	**L19**		○	○		
Located bearing DE	**L20**		✓	✓		
Bearing design for increased cantilever forces [28]	**L22**		✓	✓		
Hot bearing grease	**L24**		O. R.	O. R.		
Drainage for used grease			◘	◘	Only for:	Performance Line
	L30		✓	–	Only for:	Basic Line
Special version with higher speeds	**L37**		O. R.	O. R.		
Bearing insulation DE	**L50**		✓	✓		
Bearing insulation NDE	**L51**		✓	✓		
Measuring nipple for SPM shock pulse measurement for bearing inspection	**Q01**		✓	✓		
Balance and vibration severity						
Vibration severity grade A			◘	◘		
Vibration severity grade B [18]	**L00**		✓	✓	Only for:	4-pole motors
Half-key balancing (standard)			◘	◘		
Balancing without feather key	**L01**		✓	✓	Not for:	Combination with order code L04
Full-key balancing	**L02**		✓	✓	Not for:	Combination with order code L04
Shaft and rotor						
Shaft extension with standard dimensions, without feather keyway	**L04**		✓	✓	Not for:	Combination with order codes L01, L02
Standard, cylindrical shaft extension (second shaft extension) NDE acc. to EN 50347	**L05**		✓	✓	Not for:	Combination with order codes F01, F10, F11, F12, F70, F77, F78, G01, G02, G04, G05, G06, G07, G15, G16, G41, G42, G43, H00, Y74, Y76, Y79
Standard shaft made of stainless steel (e.g. 1.4021)	**L06**		✓	✓		
Concentricity of shaft extension in accordance with DIN 42955 Tolerance R	**L07**		✓	✓		
Concentricity of shaft extension, coaxiality, and linear movement in accordance with DIN 42955 Tolerance R for flange-mounted motors	**L08**		✓	✓	Not for:	Combination with type of construction code letters A, T, U, V (14th position of the Article No.)

For legends and footnotes, see page 3/27.

© Siemens AG 2018

Options · Cast-iron series 1LE55 Basic Line, 1LE56 Performance Line

Special versions	Additional identification code **-Z** with order code and plain text if required	Frame size 315	Frame size 355	Motor version	
		1LE55.4 Basic Line		IEC	IE4
		1LE56.4 Performance Line			
		1LE55.3 Basic Line			IE3
1LE5 . . . -. . . . . -. . . . -Z	Order code	1LE56.3 Performance Line			
Shaft and rotor (continued)					
Non-standard cylindrical shaft extension, DE [19]	**Y58** • and customer specifications	✓	✓		
Non-standard cylindrical shaft extension, NDE [19]	**Y59** • and customer specifications	✓	✓	Not for:	Combination with order code F70
Special shaft steel	**Y60** • and customer specifications	O. R.	O. R.		
Heating and ventilation					
Sheet metal fan cover		□	□	Only for:	Performance Line
	F74	✓	–	Only for:	Basic Line
Without external fan and without fan cover	**F90**	✓	✓	Not for:	Combination with order codes F74, F77, F78
Anti-condensation heating for 230 V (2 terminals)	**Q02**	✓	✓		
Anti-condensation heating for 115 V (2 terminals)	**Q03**	✓	✓		
Anti-condensation heating for 400 V (2 terminals)	**Q06**	✓	✓		
Separately driven fan with non-standard voltage and/or frequency	**Y81** • and customer specifications	✓	✓		
Rating plate and additional rating plates					
Additional rating plate for voltage tolerance [20]	**B07**	✓	–		
Second rating plate, loose	**M10**	✓	✓		
Rating plate, stainless steel	**M11**	✓	✓		
Additional rating plate with deviating rating plate data	**Y80** • and customer specifications	✓	✓		
Additional rating plate with customer specifications	**Y82** • and customer specifications	✓	✓		
Additional information on rating plate and on package label (max. 20 characters)	**Y84** • and customer specifications	✓	✓		
Adhesive label, supplied loose (printed with: Article No., Serial No.: 2 lines of text)	**Y85** • and customer specifications	✓	✓		
Extension of the liability for defects					
Extension of the liability for defects by 12 months to a total of 24 months (2 years) from delivery [21]	**Q80**	✓	✓		
Extension of the liability for defects by 18 months to a total of 30 months (2.5 years) from delivery [21]	**Q81**	✓	✓		
Extension of the liability for defects by 24 months to a total of 36 months (3 years) from delivery [21]	**Q82**	✓	□		
Extension of the liability for defects by 30 months to a total of 42 months (3.5 years) from delivery [21]	**Q83**	✓	✓		
Extension of the liability for defects by 36 months to a total of 48 months (4 years) from delivery [21]	**Q84**	✓	✓		
Extension of the liability for defects by 42 months to a total of 60 months (5 years) from delivery [21]	**Q85**	✓	✓		
Packaging, safety notes, documentation and test certificates					
Acceptance test certificate 3.1 according to EN 10204 [21]	**B02**	✓	✓		
Printed German/English Operating Instructions enclosed [22]	**B04**	✓	✓		
Without "Made in manufacturing country" marking	**B13**	○	○		
Equivalent circuit diagram	**B51**	✓	✓		
Starting diagram (torque vs. speed and current vs. speed)	**B52**	✓	✓		
Document - Electrical datasheet	**B60**	✓	✓		
Document - Order dimensional drawing	**B61**	✓	✓		
Standard test (routine test) with acceptance	**B65**	✓	✓		
Temperature test without acceptance	**B67**	✓	✓		
Temperature test with acceptance	**B68**	✓	✓		

For legends and footnotes, see page 3/27.

© Siemens AG 2018

Options · Cast-iron series 1LE55 Basic Line, 1LE56 Performance Line

Special versions	Additional identification code **-Z** with order code and plain text if required	Frame size		Motor version	
		315	**355**		
		1LE55.4 Basic Line		IEC	IE4
		1LE56.4 Performance Line			
		1LE55.3 Basic Line			IE3
1LE5 . . . -. . . . . -. . . . -Z	Order code	**1LE56.3 Performance Line**			
Packaging, safety notes, documentation and test certificates (continued)					
Type test with heat run for vertical motors, without acceptance	**B80**	✓	✓		
Type test with heat run for vertical motors, with acceptance	**B81**	✓	✓		
Type test with heat run for horizontal motors, without acceptance	**B82**	✓	✓		
Type test with heat run for horizontal motors, with acceptance	**B83**	✓	✓		
"Basic" documentation package	**B90**	✓	✓		
"Advanced" documentation package	**B91**	✓	✓		
"Projects" documentation package	**B92**	✓	✓		
Connected in star for dispatch	**M01**	✓	✓		
Connected in delta for dispatch	**M02**	✓	✓		

□ Standard version
○ Without additional charge
• This order code only determines the price of the version – Additional plain text is required.
✓ With additional charge
O. R. Possible on request
– Not possible

1) Evaluation with associated tripping unit (see Catalog IC 10) is recommended.

2) Parallel Whitworth threaded pipe DIN ISO 228 (DIN 259) BSPP (British Standard Pipe Parallel) threaded pipe for connections not sealed in the thread (cylindrical), external = G.

3) The grease lifetime specified in Catalog Section 1 "Introduction" refers to CT 40 °C. If the coolant temperature is increased by 10 K, the grease lifetime and regreasing interval are halved.

4) Not possible for 1LE5 motors with increased power.

5) A second shaft extension is not possible. Please inquire for mounted brakes.

6) For order codes **F10**, **F11**, and **F12**, the brake supply voltage must be specified or ordered.

7) The 1XP8 rotary pulse encoders are fitted with a protective cover as standard. The protective cover is omitted at the factory when a rotary pulse encoder is combined with a separately driven fan, because in this case the rotary pulse encoder is installed under the fan cover.

8) In combination with a separately driven fan (order code **F70**) the 1XP8032-10 rotary pulse encoder is used instead of 1XP8012-10 or 1XP8032-20 is used instead of 1XP8012-20.

9) For frame sizes 315 and 355, LL and HOG rotary pulse encoders are fitted with a protective cover as standard. The protective cover is omitted at the factory when a rotary pulse encoder is combined with a separately driven fan, because in this case the rotary pulse encoder is installed under the fan cover. Protective cover (order code **G43**) possible.

10) Option (encoder mounting) is only possible for motors with a mounted separately driven fan or for naturally cooled motors (without an external fan). This option can be used in combination with brakes of type KFB and SFB. This option cannot be used in combination with brakes of type 2LM8.

11) Order code **H00** provides mechanical protection for encoders.

12) Not possible for type of construction IM V3.

13) Not possible in combination with HOG 9 D 1024I rotary pulse encoder (order code **G05**) and/or 2LM8 brake (order code **F01**).

14) Not possible in combination with 2LM8 brake (order code **F01**).

15) In connection with mountings, the respective technical specifications must be observed, please inquire before ordering.

16) The rated voltage is indicated on the rating plate without voltage range.

17) Possible up to 600 V max. The rated voltage is indicated on the rating plate without voltage range. Order codes D30 does not authorize importing into USA and Mexico.

18) On request for 2-pole motors

19) When motors are ordered that have a longer or shorter shaft extension than normal, the required position and length of the feather keyway must be specified in a sketch. It must be ensured that only feather keys in accordance with EN 50347 are used. The feather keyway is positioned centrally on the shaft extension. The length is defined by the manufacturer in accordance with the appropriate standard. Not valid for: Tapered shafts, non-standard threaded journals, non-standard shaft tolerances, friction welded journals, extremely "thin" shafts, special geometry dimensions (e.g. square journals), hollow shafts. Valid for non-standard shaft extensions DE or NDE. The feather keys are supplied in every case. For order codes **Y58**, **Y59** and **L05** the following applies:
– Dimensions D and DA ≤ ball bearing inner diameter (see dimension tables for "Dimensions")
– Dimensions E and EA ≤ 2 × length E (standard) of the shaft extension.

20) Can be ordered for 400VΔ/690VY (voltage code "34").

21) The delivery time for the factory test certificate may differ from the delivery time for the motor.

22) The Operating Instructions (Compact) are available in PDF format for all official EU languages at http://support.automation.siemens.com/WW/view/en/10803948/133300

23) With **H08**, feet dimensions C and CA differ from EN 50347! Further information is available in the DT Configurator (see Appendix, "Tools and engineering").

24) Not possible in combination with order codes **Q72** and **Q78**.

25) Not possible in combination with order codes **N05**, **N06**, **N07**, **N08** and **N11**.

26) When order codes **F01** and **F12** are combined, the rectifier for the brake will be supplied separately as a single part.

27) Order code **S06** cannot be combined with order code **S00** and **S01**. It can be combined with **Y53** on request.

28) A minimum cantilever force F_{min} of 0.5 · F_{max} is required for NU bearings (cylindrical roller bearings) in contrast to ball bearings. Cylindrical roller bearings are not suitable for coupling output or for brief periods of no-load operation without cantilever force.

© Siemens AG 2018

Overview

Couplings

The motor from Siemens is connected to the machine or gear unit through a coupling. Siemens is an important coupling manufacturer with a wide range of products.

For standard applications, Siemens recommends that flexible couplings, types N-EUPEX and RUPEX or torsionally rigid couplings, types ARPEX and ZAPEX are used. For special applications, FLUDEX and ELPEX-S couplings are recommended.

Available from:

Siemens contact partner - ordering from catalog Siemens MD 10.1 "FLENDER Standard Couplings"

or

Siemens AG
Kupplungswerk Mussum
Industriepark Bocholt
Schlavenhorst 100
46395 Bocholt, Germany
Phone +49 (2871) 922185
Fax +49 (2871) 922579

www.siemens.com
Email: flendercouplings@siemens.com

Taper pins according to DIN 258 with threaded ends and constant taper lengths

Taper pins are used for components that are repeatedly removed. The drilled hole is conically ground using a conical reamer until the pin can be pushed in by hand until the cone shoulder lies approx. 3 to 4 mm above the rim of the hole.

It can then be driven in using a hammer until it is correctly seated. The pin is removed from the drilled hole by screwing on the nut and tightening it.

Standardized taper pins are commercially available.

For instance, available from:

Otto Roth GmbH & Co. KG
Rutesheimer Strasse 22
70499 Stuttgart, Germany
Phone +49 (711) 1388-0
Fax. +49 (711) 1388-233

www.ottoroth.de
Email: info@ottoroth.de

Foundation block according to DIN 799

The foundation blocks are inserted into the stone foundation and embedded in concrete. They are used for fixing machines of medium size, slide rails, pedestal bearings, base frames, etc. After the fixing bolts have been unscrewed, the machines can be shifted without them having to be lifted.

When the machine is initially installed, the foundation block that is bolted to the machine (without shims) and fitted with taper pins is not embedded with concrete until the machine has been completely aligned. In this case, the machine is positioned 2 to 3 mm lower. The difference in shaft height is compensated for by inserting shims on final installation. The taper pins safeguard the exact position of the machine when it is repeatedly removed and replaced without the need for realignment.

Available from:

Lütgert & Co. GmbH
Postfach 42 51
33276 Gütersloh, Germany
Phone +49 (5241) 7407-0
Fax +49 (5241) 7407-90

www.luetgert-antriebe.de
Email: info@luetgert-antriebe.de

Slide rails with fixing bolts and tensioning screws according to DIN 42923

Slide rails are used to tension the belt of a machine easily and conveniently when there is no belt-tensioning pulley. They are fixed to the base using stone bolts or foundation blocks.

The assignment of slide rails to motor size can be found in DIN 42923. For motors of frame sizes 355 to 450, there are no standardized slide rails (please inquire).

Available from:

Lütgert & Co. GmbH
Postfach 42 51
33276 Gütersloh, Germany
Phone +49 (5241) 7407-0
Fax +49 (5241) 7407-90

www.luetgert-antriebe.de
Email: info@luetgert-antriebe.de

© Siemens AG 2018

More information

Replacement motors and repair parts

- Commitment to provide replacement motors and repair parts following delivery of the motor:
  - For up to 3 years after delivery of the original motor, in the event of total motor failure, Siemens will supply a comparable replacement motor with regard to the mounting dimensions and functions. (The type series may vary.)
  - If a replacement motor is supplied within the 3-year period, this does not mean that the warranty restarts.
  - Replacement motors delivered after the active production of the motor series are also identified as spare motors on the rating plate.
  - Spare parts are offered only for these spare motors on request; repair and replacement are not possible.
  - After a period of 3 years (after the delivery of the original motor), it is only possible to repair these motors (depending on the availability of the spare parts required).
  - For up to 5 years after the delivery of the original motor, spare parts will be available and for a further 5 years, Siemens will provide information about spare parts and will supply documents when required.
- When repair parts are ordered, the following details must be provided:
  - Designation and part number
  - Article No. and factory number of the motor.
- For bearing types, see Catalog Section 1 "Introduction".
- For standard components, a commitment to supply repaired parts does not apply.
- Support hotline
  In Germany
  Phone +49 (180) 5050448

You will find telephone numbers for other countries on our Internet site:
www.siemens.com/automation/service&support

© Siemens AG 2018

Overview

Overall dimensions

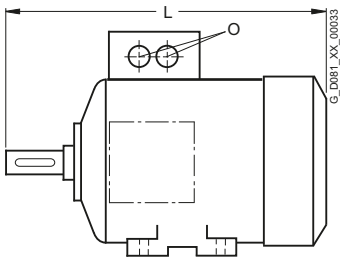

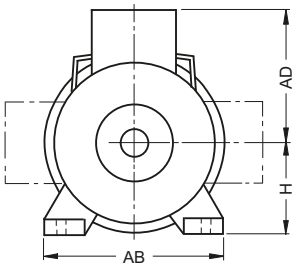

Frame size	Type	Dimensions L	AD	H	AB	O
315 L	Cast-iron series, self-ventilated					
	1LE5503-, 1LE5603-, 1LE5504-, 1LE5604-					
	3AA6	1282	590	315	610	2 × M63 × 1.5
	3AB6	1312				
	3AA7	1362				
	3AB7	1422				
	3AC7		542			
	3AC8	1512	590			
	3AD7	1422	543			
	3AD8	1512				
	1LE5533-, 1LE5633-, 1LE5534-, 1LE5634-					
	3AA6	1282	590	315	610	2 × M63 × 1.5
	3AB6, 3AB7, 3AC7,	1422				
	3AD7		543			
	3AA7	1362				
	3AC8, 3AD8	1512				

Frame size	Type	Dimensions L	AD	H	AB	O
355 M/L	Cast-iron series, self-ventilated					
	1LE5503-, 1LE5603-, 1LE5504-, 1LE5604-					
	3BA3, 3BA4	1577	620	355	780	2 × M80 × 2
	3BB3, 3BB4, 3BC., 3BD.	1607				
	3BA5	1577				4 × M63 × 1.5
	3BB5	1607				
	1LE5533-, 1LE5633-, 1LE5534-, 1LE5634-					
	3BA3, 3BA4	1577	620	355	780	2 × M80 × 2
	3BB3, 3BB4, 3BC., 3BD.	1607				
	3BA5	1577				4 × M63 × 1.5
	3BB5	1607				

© Siemens AG 2018

Overview

- Dimension designations according to EN 50347 and IEC 60072.
- Fits
  The shaft extensions specified in the dimension tables (DIN 748) and centering spigot diameters (EN 50347) are machined with the following fits:

Dimension designation	ISO fit DIN ISO 286-2	
D, DA	to 30	j6
	over 30 to 50	k6
	over 50	m6
N	to 250	j6
	over 250	h6
F, FA		h9
K		H17
S	flange (FF)	H17

  The drilled holes of couplings and belt pulleys should have an ISO fit of at least H7.

- Dimension tolerances
  For the following dimension designations, the admissible deviations are given below:

Dimension designation	Dimension	Admissible deviation
H	to 250	– 0.5
	over 250	– 1.0
E, EA		– 0.5

  Keyways and feather keyways (dimensions GA, GC, F, and FA) are made in compliance with DIN 6885 Part 1.
- All dimensions are specified in mm.

3

Dimension sheet generator (within the Drive Technology Configurator)

Overview

A dimensional drawing can be created in the Drive Technology (DT) Configurator for every configurable motor. A dimensional drawing can be requested for every other motor.

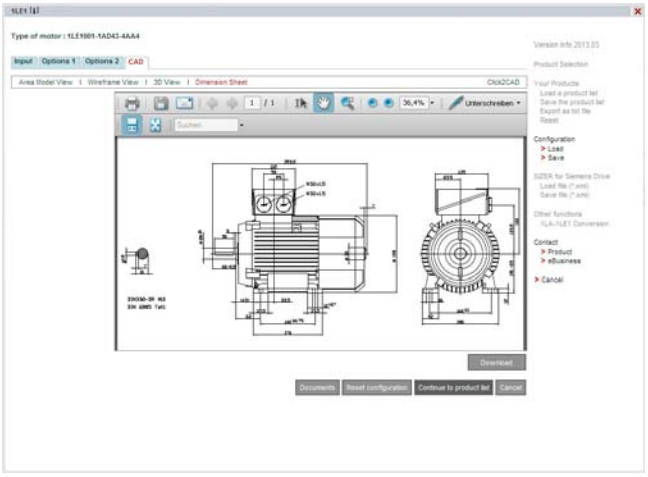

When a complete Article No. is entered or configured with or without order codes, a dimensional drawing can be called up under the "Documentation" tab.
These dimensional drawings can be presented in different views and sections and printed.
The corresponding dimension sheets can be exported, saved and processed further in DXF format (interchange/import format for CAD systems) or as bitmap graphics.

Online access in the Siemens Industry Mall

The DT Configurator is integrated into the Siemens Industry Mall and can be used on the Internet without installation.
German: www.siemens.de/dt-konfigurator
English: www.siemens.com/dt-configurator

Offline access in the Interactive Catalog CA 01

The DT Configurator is also integrated on the DVD of the Interactive Catalog CA 01 – the offline version of Siemens Industry Mall. CA 01 can be ordered from the relevant Siemens sales office or via the Internet: www.siemens.com/automation/CA01

© Siemens AG 2018

3

Dimensional drawings

Type of construction IM B3

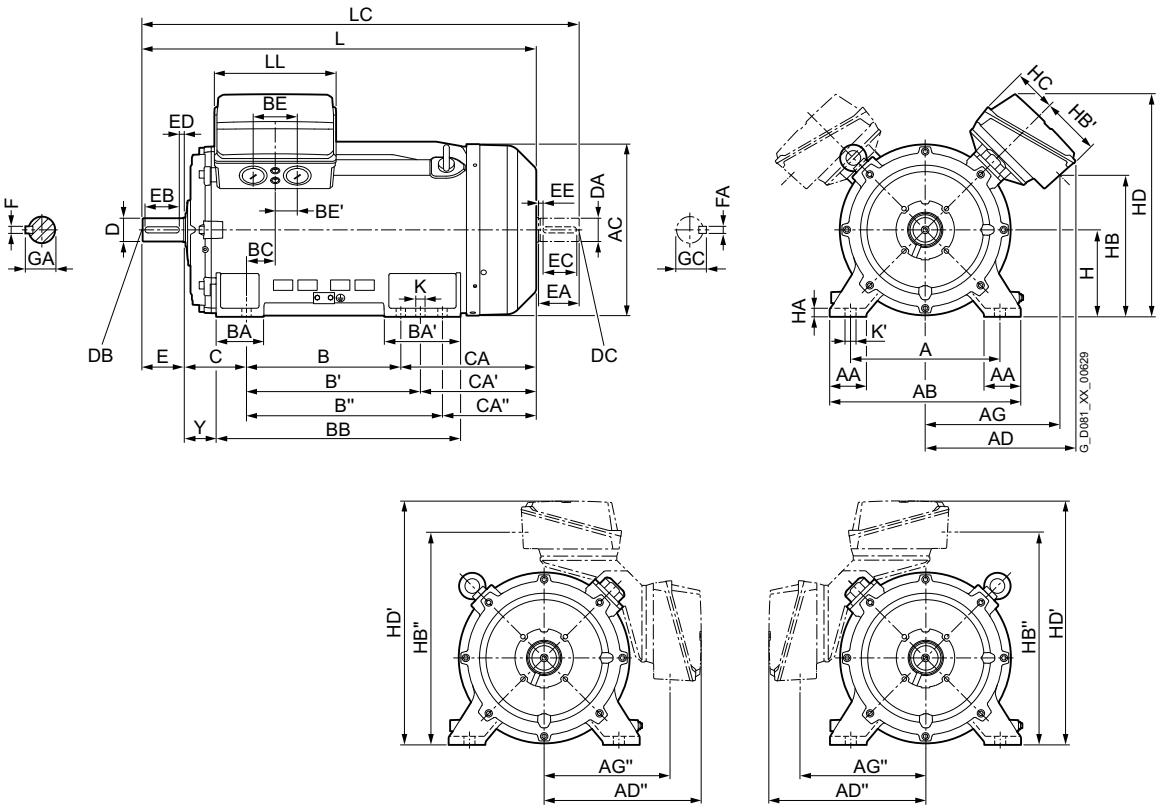

Types of construction IM B5 and IM V1

For flange dimensions, see page 1/53 (**Z** = the number of retaining holes)

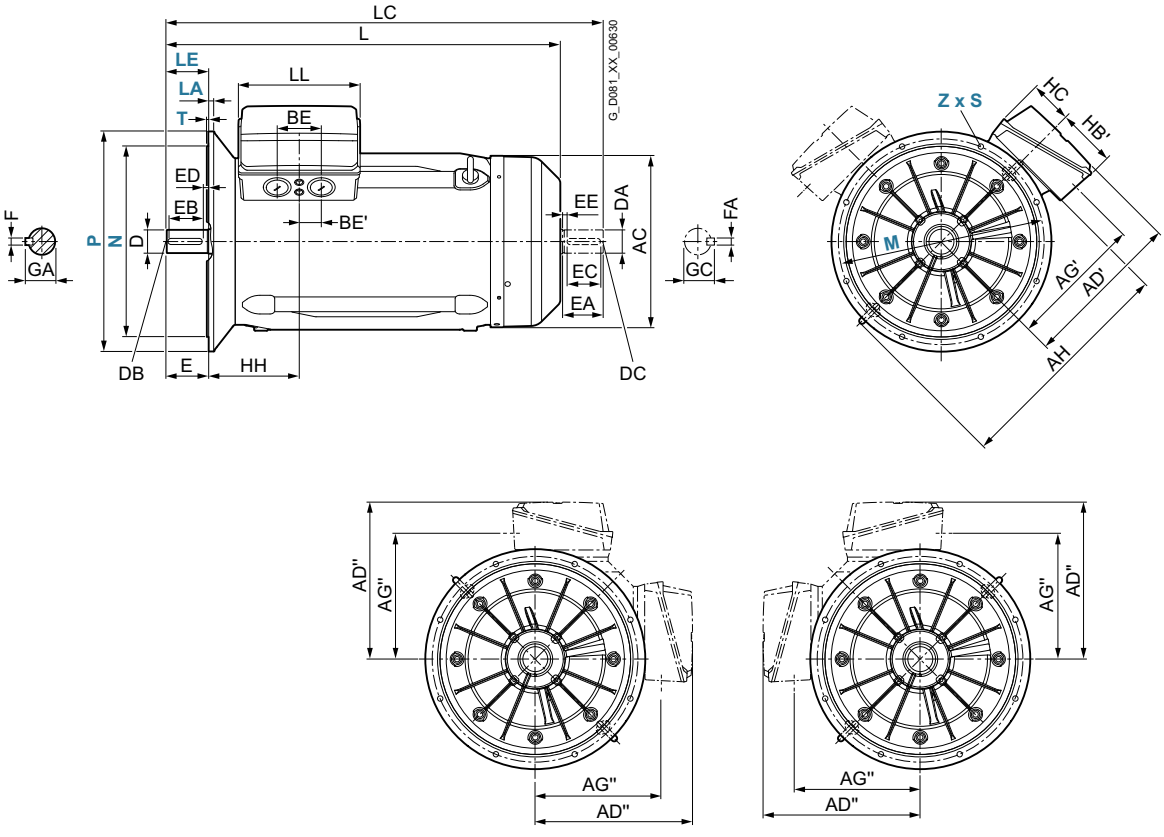

© Siemens AG 2018

Dimensional drawings (continued)

Type of construction IM B35

For flange dimensions, see page 1/53 (**Z** = the number of retaining holes)

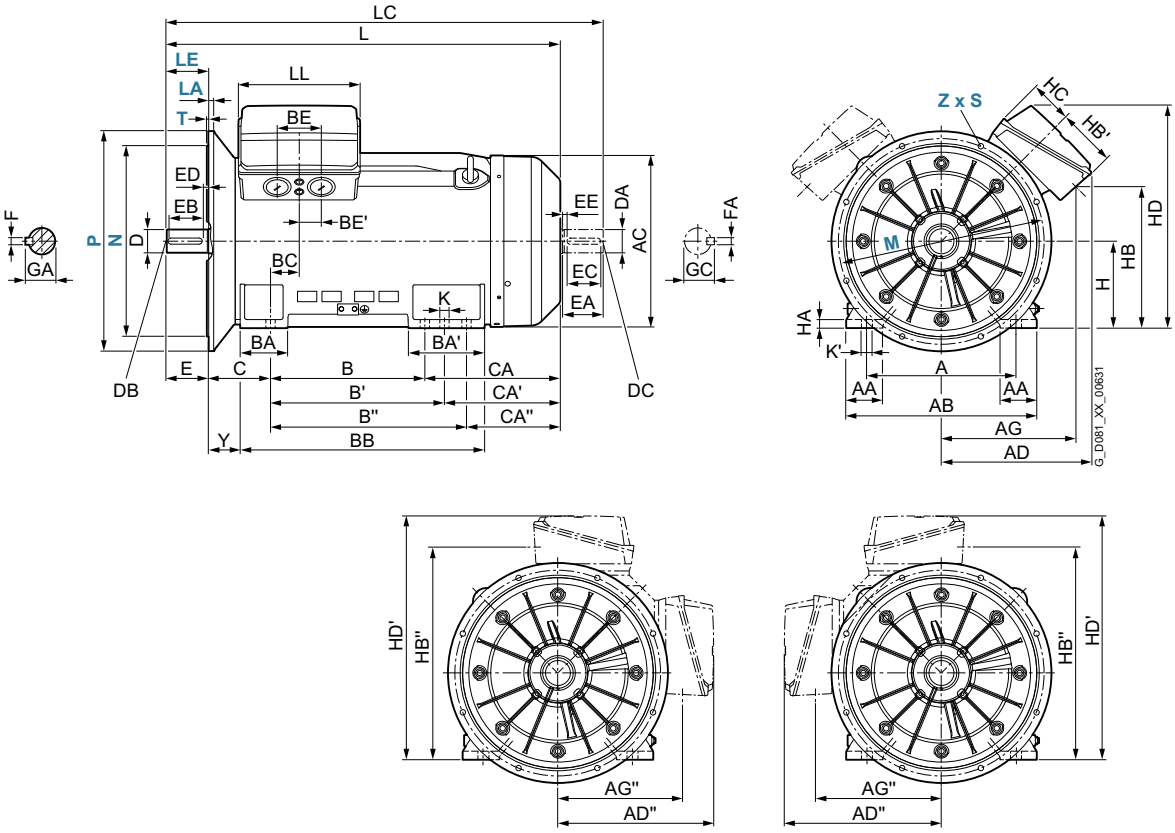

For motor		Dimension designation acc. to **IEC**																											
Frame size	Motor type 1LE5.0.-	No. of poles	A	AA	AB	AC	AD	AD'	AD"	AG	AG'	AG"	AH	B	B'	B"	BA	BA'	BB	BC	BE	BE'	C	CA	CA'	CA"	H	HA	HB
315 L	3AA6	2	508	120	610	641	590	565	540	553	459	434	890	457	508	–	176	227	648	139	120	60	216	469	418	–	315	50	412
	3AB6	4														–										–			
	3AA7	2												508	560	630		298	770					498	446	376			
	3AB7	4																						528	476	406			
	3AC7	6					542			491	473	448									135	67.5							491
	3AC8	6					590			553	459	434									120	60		618	566	496			412
	3AD7	8					543			491	473	448									135	67.5		528	476	406			491
	3AD8	8																						618	566	496			
355 M, 355 L	3BA3, 3BA4, 3BA5	2	610	150	780	718	620	657	644	550	542	530	940	630	710	800	198	315	998	116	240	120	254	553	473	383	355	49	574
	3BB., 3BC., 3BD.	4, 6 8															194	311										35	

For motor		Dimension designation acc. to **IEC**											DE shaft extension							NDE shaft extension								
Frame size	Motor type 1LE5.0.-	No. of poles	HB'	HB''	HC	HD	HD'	HH	Y	K	K'	L	LC [1]	LL	D	DB	E	EB	ED	F	GA	DA	DC	EA	EC	EE	FA	GC
315 L	3AA6	2	336	749	167	800	855	355	146	28	35	1282	1427	327	65	M20	140	125	10	18	69	60	M20	140	125	10	18	64
	3AB6	4										1312	1457		85		170	140	25	22	90	70					20	74.5
	3AA7	2										1362	1507		65		140	125	10	18	69	60					18	64
	3AB7	4										1422	1567		85		170	140	25	22	90	70					20	74.5
	3AC7	6	225	763																								
	3AC8	6	336	749								1512	1657															
	3AD7	8	225	763								1422	1567															
	3AD8	8										1512	1657															
355 M, 355 L	3BA3, 3BA4, 3BA5	2	247	885	188	911	999	370	130	35	42	1577	1722	519	75	M20	140	125	10	20	79.5	60	M20	140	125	10	18	64
	3BB., 3BC., 3BD.	4, 6 8										1607	1782		95	M24	170	140	25	25	100	80		170	140	25	22	85.5

[1] In the low-noise version, a second shaft extension and/or mounted encoder is not possible.

© Siemens AG 2018

3

Dimensional drawings

Type of construction IM B3

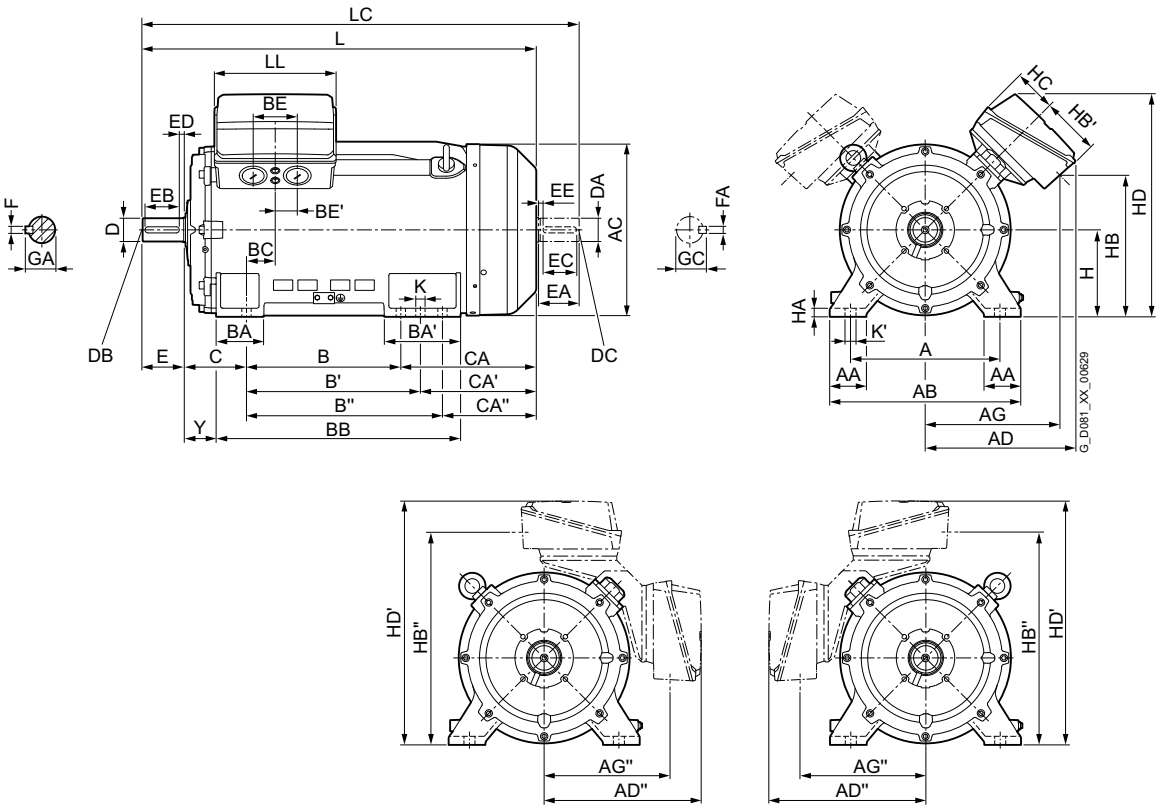

Types of construction IM B5 and IM V1

For flange dimensions, see page 1/53 (**Z** = the number of retaining holes)

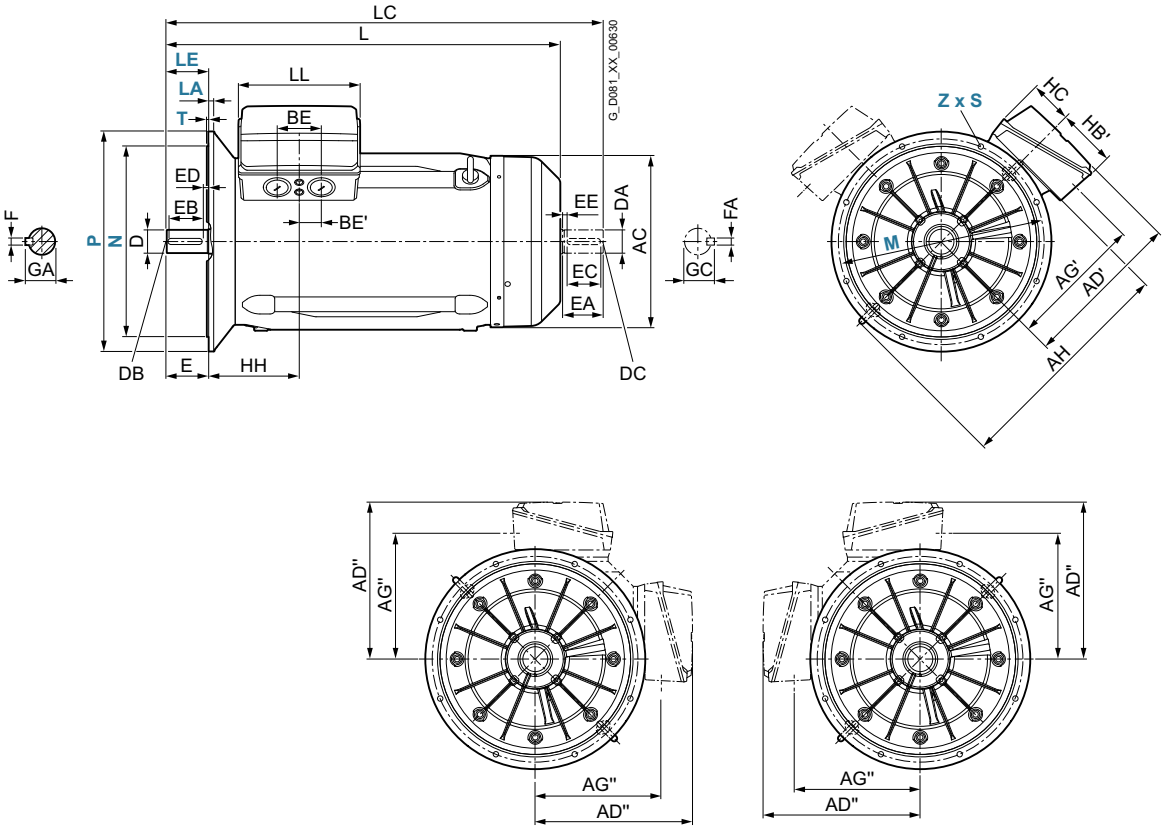

© Siemens AG 2018

Dimensional drawings (continued)

Type of construction IM B35

For flange dimensions, see page 1/53 (**Z** = the number of retaining holes)

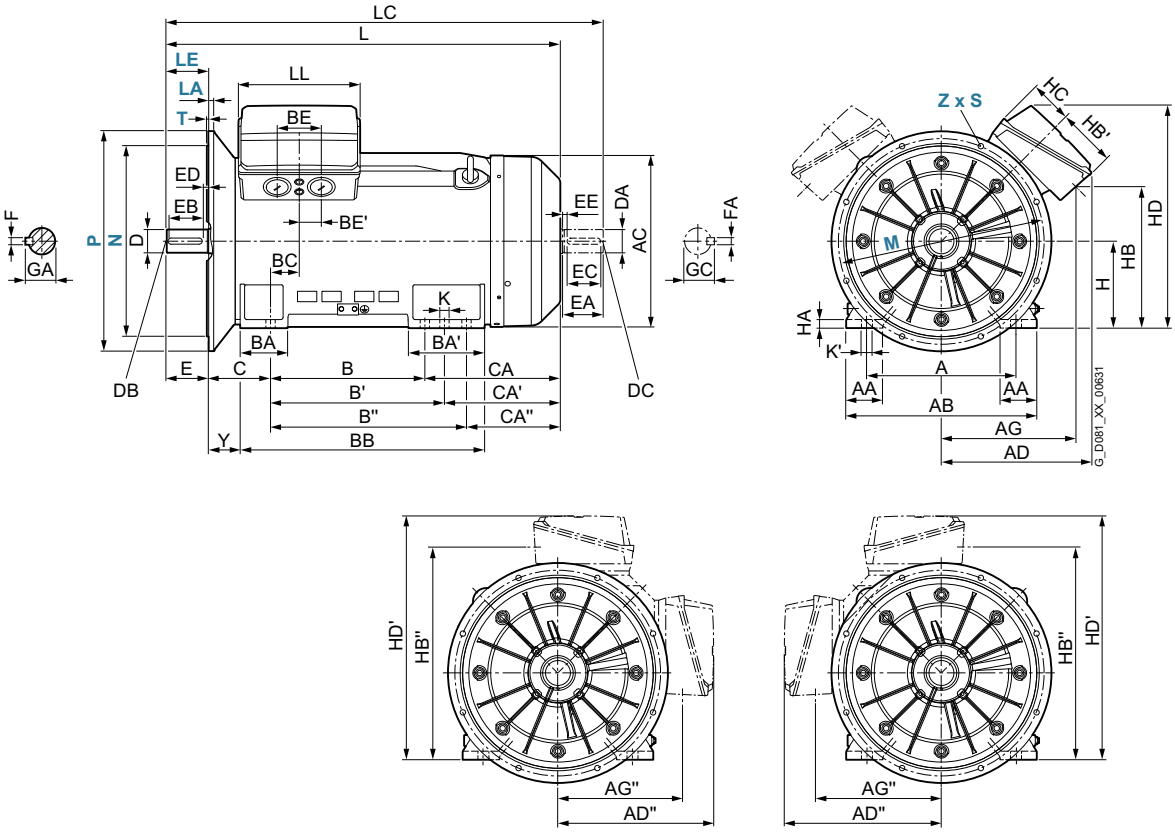

For motor		Dimension designation acc. to **IEC**																											
Frame size	Motor type 1LE5.3.-	No. of poles	A	AA	AB	AC	AD	AD'	AD"	AG	AG'	AG"	AH	B	B'	B"	BA	BA'	BB	BC	BE	BE'	C	CA	CA'	CA"	H	HA	HB
315 L	3AA6	2	508	120	610	641	590	565	540	553	459	434	890	457	508	–	176	227	648	139	120	60	216	469	418	–	315	50	412
	3AB6, 3AB7	4												508	560	630		298	770					528	476	406			
	3AA7	2																						498	446	376			
	3AC8	6																						618	566	496			
	3AC7, 3AD7	6					543			491	473	448									135	67.5		528	476	406			491
	3AD8	8																						618	566	496			
355 M, 355 L	3BA3, 3BA4, 3BA5	2	610	150	780	718	620	657	644	550	542	530	940	630	710	800	198	315	998	116	240	120	254	553	473	383	355	49	574
	3BB., 3BC., 3BD.	4, 6 8															194	311										35	

For motor		Dimension designation acc. to **IEC**											DE shaft extension								NDE shaft extension					
Frame size	Motor type 1LE5.3.-	No. of poles	HB'	HB''	HC	HD	HD'	HH	Y	K	K'	L	LC [1]	LL	D	DB	E	EB	ED	F	GA	DA	DC	EA	EC	EE	FA	GC
315 L	3AA6	2	336	749	167	800	855	355	146	28	35	1282	1427	327	65	M20	140	125	10	18	69	60	M20	140	125	10	18	64
	3AB6, 3AB7	4										1422	1567		85		170	140	25	22	90	70					20	74.5
	3AA7	2										1362	1507		65		140	125	10	18	69	60					18	64
	3AC8	6										1512	1657		85		170	140	25	22	90	70					20	74.5
	3AC7, 3AD7	6, 8	225	763								1422	1567															
	3AD8	8										1512	1657															
355 M, 355 L	3BA3, 3BA4, 3BA5	2	247	885	188	911	999	370	130	35	42	1577	1722	519	75	M20	140	125	10	20	79.5	60	M20	140	125	10	18	64
	3BB., 3BC., 3BD.	4, 6 8										1607	1782		95	M24	170	140	25	25	100	80		170	140	25	22	85.5

[1] In the low-noise version, a second shaft extension and/or mounted encoder is not possible.

© Siemens AG 2018

Notes

© Siemens AG 2018

4/2 Introduction
4/2 Overview
4/2 Application
4/2 Design
4/3 Technical specifications

4/4 SIMOTICS GP/SD VSD4000 line reluctance motors for SINAMICS converters

4/4 Orientation
4/4 Overview
4/4 Benefits
4/5 Application
4/5 Design
4/6 Technical specifications
4/25 Article number code

4/26 Selection and ordering data
4/26 Self-ventilated, enclosed motors Motors with Super Premium Efficiency
4/26 1FP10.4 aluminum series
4/28 1FP15.4 cast-iron series

4/30 Article No. supplements and special versions
4/30 Voltages
4/30 1FP10.4 aluminum series
4/31 1FP15.4 cast-iron series
4/32 Types of construction
4/32 1FP10.4 aluminum series
4/35 1FP15.4 cast-iron series
4/37 Motor protection
4/37 1FP10.4 aluminum series
4/38 1FP15.4 cast-iron series
4/39 Terminal box position
4/39 1FP10.4 aluminum series
4/40 1FP15.4 cast-iron series
4/41 Options
4/41 1FP10.4 aluminum series
4/45 1FP15.4 cast-iron series
4/50 Accessories

4/52 Dimensions
4/52 Overall dimensions
4/53 Notes on the dimensions
4/53 Dimension sheet generator
4/54 Aluminum series, self-ventilated – Super Premium Efficiency
4/56 Cast-iron series, self-ventilated – Super Premium Efficiency

4/60 SIMOTICS GP/SD VSD10 line standard motors for converter operation

4/60 Orientation
4/60 Overview
4/60 Benefits
4/61 Application
4/61 Design
4/61 Technical specifications
4/68 Article number code

4/70 Selection and ordering data
4/70 Self-ventilated, enclosed motors Motors with Standard Efficiency
4/70 1LE1092 aluminum series
4/76 1LE1592 cast-iron series

4/86 Article No. supplements and special versions
4/86 Voltages
4/86 1LE1092 aluminum series
4/87 1LE1592 cast-iron series
4/88 Types of construction
4/88 1LE1092 aluminum series
4/91 1LE1592 cast-iron series
4/93 Motor protection
4/93 1LE1092 aluminum series
4/94 1LE1592 cast-iron series
4/95 Terminal box position
4/95 1LE1092 aluminum series
4/96 1LE1592 cast-iron series
4/97 Options
4/97 1LE1092 aluminum series
4/101 1LE1592 cast-iron series
4/106 Accessories

4/108 Dimensions
4/108 Overall dimensions
4/109 Notes on the dimensions
4/109 Dimension sheet generator
4/110 Aluminum series, self-ventilated – Standard Efficiency
4/112 Cast-iron series, self-ventilated – Standard Efficiency

© Siemens AG 2018

Overview

SIMOTICS GP/SD VSD motors optimized for converter operation *(VSD = **V**ariable **S**peed **D**rive)*

In addition to the standard motors optimized for line operation, Siemens also offers two motor lines optimized for converters for variable-speed operation on a frequency converter.

- SIMOTICS VSD10 line – induction motors for converter operation
- SIMOTICS VSD4000 line – reluctance motors for operation with SINAMICS G120/S120 converters

The motors are optionally available with an aluminum housing (SIMOTICS GP) or with a rugged cast-iron housing (SIMOTICS SD).

SIMOTICS VSD motors are characterized by the following features:

- High energy efficiency:
  Because the SIMOTICS VSD motors are optimized for operation with SINAMICS converters, the system power losses are low and the energy efficiency therefore high.
  In particular, the SIMOTICS VSD4000 line synchronous reluctance motors in conjunction with optimized control algorithms result in excellent loss-optimized operation in the speed setting range with a full and partial load and are superior to an induction motor system that has comparable nominal efficiency, especially in the partial-load range.
- Optimized investment costs:
  Optimizing the assignment of the motor active part to the Power Module results in low capital investment costs. The motors and frequency converters are optimally harmonized and coordinated with one another. No power unit upgrade is therefore required.
  This applies in particular to the SIMOTICS VSD10 line motors on account of their optimized motor design.
- Low space requirement, low weight:
  The high power density and compact design ensure low space requirements combined with low weight.
- Very rugged and reliable:
  High availability using the standard protection functions for converter operation (KTY84-130 temperature sensors).
  As a result of the optimized insulation system, a high degree of reliability is obtained for four-quadrant operation with SINAMICS converters. SIMOTICS VSD10 motors also have insulated bearings at the non-drive end (NDE) in frame sizes 280 and 315.
- Fast and simple commissioning by transferring a motor code on the frequency converter.
- Flexible in use:
  SIMOTICS VSD line motors are designed as standard for operation with a 50 Hz, 60 Hz and 87 Hz characteristic.
- Wide range of options:
  By consistently utilizing the 1LE1 standard motor platform, almost all options of the 1LE1 line motors can also be used for the SIMOTICS VSD line motors.
- High level of compatibility:
  Line and converter motors can be easily interchanged due to their identical dimensions and customer interfaces. The connection and operating philosophy is exactly the same as for 1LE1 line motors.
- International applicability:
  The motors are not subject to any minimum efficiency requirements for specific countries.

Application

The SIMOTICS GP/SD VSD motors can be deployed in all industries and sectors, e.g. paper, steel, energy, chemistry, water/waste water.

The wide field of applications that can be addressed includes, for example, the following:

- Pumps
- Fans
- Compressors
- Cranes
- Conveyor belts

Design

The SIMOTICS GP/SD VSD motors are based on the platform of the SIMOTICS 1LE1 motor type series. For this reason, the principal design is the same as for the 1LE1 line motors – the mechanical parts are identical.
The motors are adapted to the converter by appropriately dimensioning the active part and VSD-specific rating plate data.

Moreover, a large number of the variations available in the SIMOTICS 1LE1 motors (types of construction, motor protection, terminal box position, and options) are also available for the VSD motors.

SIMOTICS VSD4000 line	SIMOTICS VSD10 line
Use in VSD applications with high dynamic requirements	Use in VSD applications
Focus on low operating costs	Focus on low investment costs
Very low system power losses due to the reluctance principle and optimum coordination of the motor with the converter	Low system power losses due to optimum coordination of the motor with the converter
Optimized for operation with SINAMICS G120 and S120	Optimized for use with SINAMICS G120, G130, G150
36 month warranty	• 12 month warranty for SIMOTICS GP • 24 month warranty for SIMOTICS SD (optionally expandable)

© Siemens AG 2018

Technical specifications

Brief overview of the general technical specifications for SIMOTICS VSD4000 line reluctance motors

Air-cooled, enclosed version with self-ventilation [1]	
Operation	Converter operation – VSD
Power at 50 Hz [2]	0.55 ... 37 kW
Rated speed	1500 rpm, 1800 rpm and 2610 rpm 3000 rpm, 3600 rpm
Voltages	50 Hz line supplies: 400 V 60 Hz line supplies: 460 V
Cooling method	IC411, self-ventilated
Frame size	SIMOTICS GP: 80/112 … 200 SIMOTICS SD: 80/112 … 200
Degree of protection [3]	IP55
Housing	Aluminum or cast-iron version
Load characteristic	$T \sim n^2$, T = const.
Motor type	SIMOTICS GP: 1FP10.4 SIMOTICS SD: 1FP15.4

Brief overview of the general technical specifications for SIMOTICS VSD10 line standard motors for converter operation

Air-cooled, enclosed version with self-ventilation [1]	
Operation	Converter operation – VSD
Power at 50 Hz	2.2 ... 200 kW (1500 rpm) 3 ... 90 kW (3000 rpm)
Rated speed	1500 rpm, 1800 rpm and 2610 rpm [4] 3000 rpm, 3600 rpm and 5220 rpm [4]
Voltages	50 Hz line supplies: 400 V, 500 V, 690 V 60-Hz supply systems: 460 V, 600 V
Cooling method	IC411, self-ventilated
Frame size	SIMOTICS GP: 100 … 160 SIMOTICS SD: 100 … 315
Degree of protection [3]	IP55
Housing	Aluminum or cast-iron version
Load characteristic	$T \sim n^2$, T = const.
Motor type	SIMOTICS GP: 1LE1092 SIMOTICS SD: 1LE1592

[1] Forced ventilation optionally available.
[2] Rated speed 1500 rpm.
[3] Other degrees of protection optionally available.
[4] 87 Hz characteristic not available for all frame sizes.

© Siemens AG 2018

Overview

SIMOTICS GP/SD VSD4000 line motor series: 1FP10, 1FP15

As a result of their flexibility and the wide range of versions, SIMOTICS GP/SD VSD4000 line motors are especially suitable for sectors and industries, where the focus is on minimum life-cycle costs (TCO) and/or operation with a high dynamic performance.

Versions of the SIMOTICS GP/SD VSD4000 line motors: 1FP10, 1FP15

The motors have compact dimensions in a surface-cooled, enclosed version with self-ventilation. They have been specifically designed for converter operation.

1FP10 General Purpose for converter operation

- Four-quadrant converter operation, optimally harmonized with the SINAMICS G120, PM240-2 and S120 (ALM, BLM) drive system.
- IP55 degree of protection
- IC411 cooling method, self-ventilated (IC416 cooling method, force-ventilated version optional)
- Housing: Aluminum
- Frame sizes: 80/112 to 200 [1)]

1FP15 Severe Duty for converter operation

- Four-quadrant converter operation, optimally harmonized with the SINAMICS G120, PM240-2 and S120 (ALM, BLM) drive system.
- Degree of protection IP55
- IC411 cooling method, self-ventilated (IC416 cooling method, force-ventilated version optional)
- Housing: Cast iron
- Frame sizes: 80/112 to 200

4

Benefits

The SIMOTICS GP/SD VSD4000 line has been specifically developed for operation with SINAMICS G120 converters.

- The synchronous-reluctance motors in conjunction with optimized closed-loop control algorithms result in an excellent, loss-optimized operating behavior in the speed control range at full and partial load. This system is superior to an induction motor-based system with comparable nominal efficiencies, especially in the partial load range.
- As a result of their low intrinsic moment of inertia, synchronous-reluctance motors are also especially suitable for operating modes demanding a high dynamic performance.
- Optimizing the assignment of the motor active part to the Power Module results in low capital investment costs.
- The high power density and compact design ensure low space requirements combined with low weight.
- The motors and converters are optimally harmonized and coordinated with one another. It is not therefore necessary to upgrade the power unit.
- SIMOTICS GP motors with aluminum housing or SIMOTICS SD motors with rugged cast-iron housing are available.
- High availability using the standard protection functions for converter operation (KTY84-130 temperature sensors, Pt100/Pt1000 resistance thermometers).
- As a result of the optimized insulation system, a high degree of reliability is obtained for four-quadrant operation with SINAMICS converters.
- Fast and simple commissioning by transferring a motor code into the converter.
- Standard warranty period for synchronous-reluctance motors 36 months.

More power ratings

SIMOTICS GP/SD VSD4000 line motors are designed as standard for operation with a 50-Hz, 60-Hz, and 87-Hz characteristic [2)]. No special ordering option is required.

Optimized for converter operation

The new motor series has been optimized for operation with SINAMICS G120 converters with regard to converter output currents and voltage utilization. Four-quadrant operation is possible with the SINAMICS G120, PM240-2, and S120 (ALM, BLM) converter families (for line voltages up to 480 V 3 AC).

High degree of flexibility

By consistently utilizing the 1LE1 standard motor platform, almost all options of the 1LE1 line motors can also be used for the SIMOTICS GP/SD VSD4000 line.

Known and established design

Line and converter motors can be easily interchanged due to their identical dimensions and customer interfaces. The connection and operating philosophy is exactly the same as for 1LE1 line motors.

International applications

The motors are not subject to any minimum efficiency requirements for specific countries. As a consequence, they can be operated without additional MEPS certificates, also in the USA, for example.

System components

System components required:

- SIMOTICS 1FP1 synchronous-reluctance motor
- SINAMICS G120 converter PM240-2 Power Module or SINAMICS S120 (ALM, BLM) converter

[1)] For the motor type 1FP10 of the SIMOTICS GP series, frame sizes 180 and 200 on request.

[2)] With firmware V4.7 SP3, only 1500 rpm can be programmed.

© Siemens AG 2018

Benefits (continued)

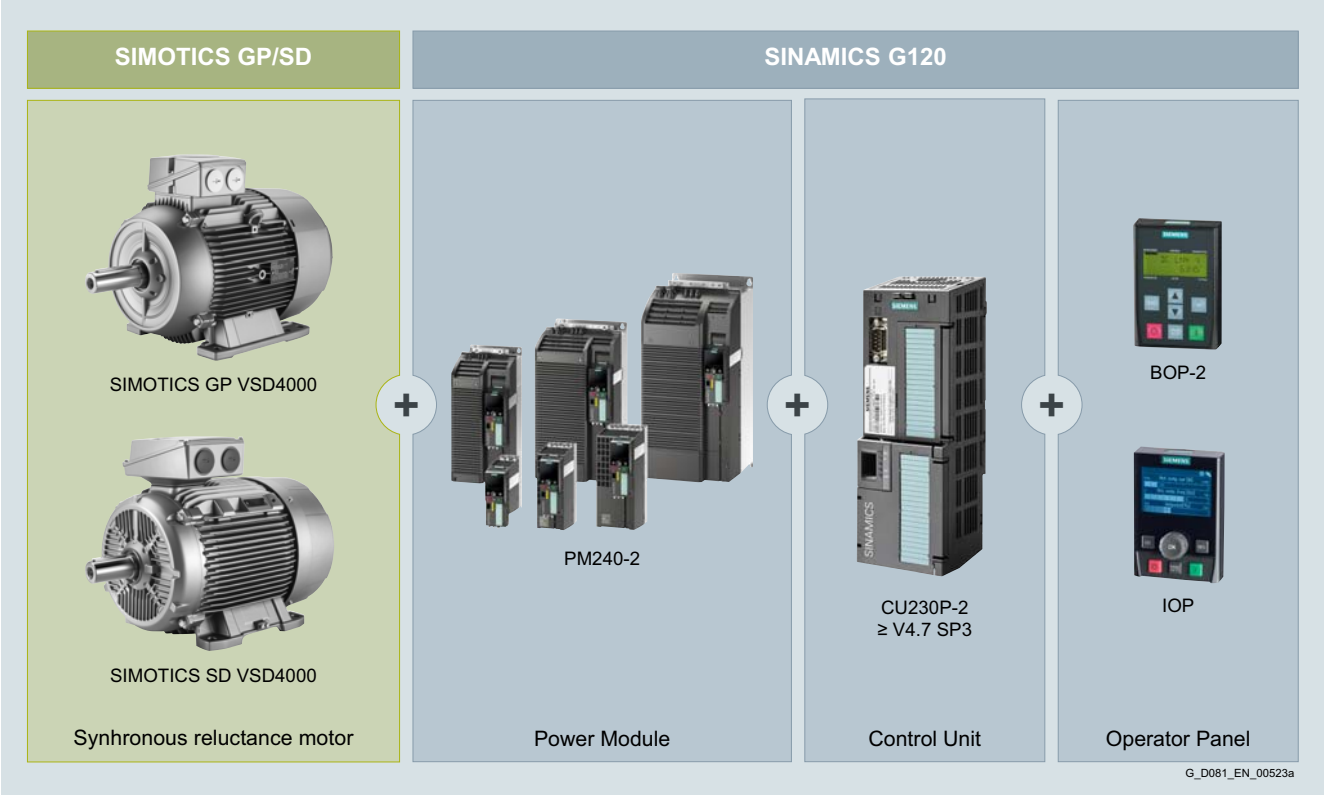

Example configuration SIMOTICS GP/SD VSD4000 with SINAMICS G120

Application

As a result of the wide range of options, the SIMOTICS GP/SD VSD4000 line motor series can be used in all industrial areas and sectors. Paper, steel, energy, chemical, water/waste water are examples of some typical sectors.

Various flange and foot-mounted designs according to EN 60034-7 are available. IP55 is the standard degree of protection (other degrees of protection optionally available).

The wide field of applications that can be addressed includes, for example, the following:

- Pumps
- Fans
- Compressors
- Cranes
- Conveyor belts
- Processing machines that require synchronous operation (e.g. in the textile industry)

Design

The SIMOTICS GP/SD VSD4000 line motors are based on the 1LE1 platform. The basic design of the SIMOTICS GP/SD VSD4000 line motors therefore corresponds to the 1LE1 line motors. The mechanical parts are identical. The motors are adapted to the converter by appropriately dimensioning the active part.

© Siemens AG 2018

Technical specifications

Overview of technical specifications

This table lists the most important technical specifications.

Type of motor	IEC low-voltage three-phase synchronous-reluctance motors
Connection types	Star/delta connection The connection used depends on the particular load characteristic.
No. of poles	4
Frame sizes	80/112 ... 200
Rated power	4-pole: 0.55 … 30 kW (50 Hz characteristic); 0.63 … 34.5 kW (60 Hz characteristic), 0.9 … 48 kW (87 Hz characteristic)
Frequencies	Characteristics for 50 Hz, 60 Hz and 87 Hz
Versions	Air-cooled, enclosed version • with self ventilation • with forced ventilation (optional) SIMOTICS GP motors in an aluminum version, frame sizes 80/112 … 200 SIMOTICS SD motors in a cast-iron version, frame sizes 80/112 … 200
System efficiency	IES2 in accordance with EN 50598 (system with SINAMICS G120 converter, PM240-2)
Marking	Only permitted for converter operation. As converter motors, IE classification according to IEC 60034-30-1 is not required.
Rated speed	1500 rpm, 1800 rpm and 2610 rpm (up to frame size 200) 3000 rpm, 3600 rpm (frame sizes 180 and 200)
Rated torque	3.5 … 191 Nm (50 Hz characteristic); 3.3 … 183 Nm (60 Hz characteristic), 3.3 … 176 Nm (87 Hz characteristic)
Insulation of the stator winding in accordance with EN 60034-1 (IEC 60034-1)	Temperature class F, utilized acc. to B Reinforced insulation system (Advanced)
Degree of protection according to EN 60034-5 (IEC 60034-5)	IP55 as standard Air-cooled, enclosed version
Cooling according to EN 60034-6 (IEC 60034-6)	• Standard: Self-ventilated (IC411) • Optional: Forced-air cooled (IC416) (132 ... 200)
Permissible coolant temperature and installation altitude	–20 ... +40 °C as standard, installation altitude up to 1000 m above sea level
Standard voltages according to EN 60038 (IEC 60038)	50-Hz line supplies: 400 V, 60-Hz line supplies: 480 V The rated motor voltage required is listed in the "Selection and ordering data" for the required motor.
Type of construction according to EN 60034-7 (IEC 60034-7)	• Without flange: IM B3, IM B6, IM B7, IM B8, IM V5, IM V6 • With flange: IM B35, IM V1, IM V3
Paint finish Suitability of paint finish for climate group according to IEC 60721, Part 2-1	As standard: color RAL 7030 stone gray
Vibration severity grade according to EN 60034-14 (IEC 60034-14)	Grade A (normal)
Shaft extension according to DIN 748 (IEC 60072)	Balancing type: half-key balancing as standard
Sound pressure level according to EN ISO 1680 (tolerance +3 dB)	The sound pressure level is listed in the "Selection and ordering data" for the required motor.
Weights	The weight is listed in the "Selection and ordering data" for the required motor.
Modular mounting concept	Optional brake and separately driven fan according to ordering data
Options	See "Article No. supplements and special versions"

© Siemens AG 2018

Technical specifications (continued)

Rating plate

In accordance with EN 60034-1, the approximate total weight is specified on the rating plate. As standard, the rating plate is in English.

For straightforward and fast commissioning with SINAMICS G converters, a motor code number is stamped on the rating plate (CODE).

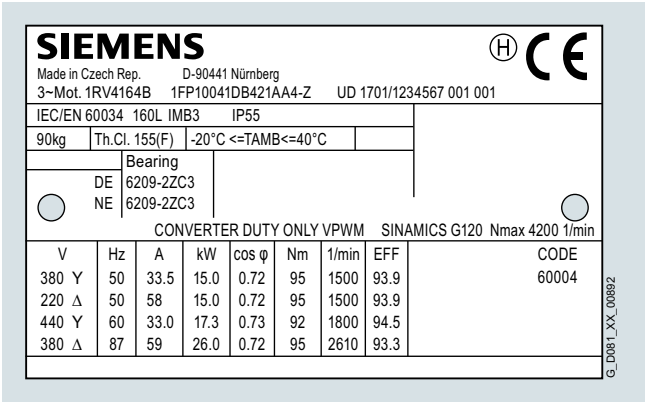

Example of a SIMOTICS GP VSD4000 line rating plate, 1FP10

Motors specially designed for converter operation

These motors have been specifically designed for converter operation. The catalog data is applicable for operation on the converter of the SINAMICS G120 series (PM240-2/PM240P-2) and SINAMICS S120 (PM240-2 and Booksize Motor Modules).

SINAMICS G120 system requirements:

- SINAMICS G120, PM240-2/PM240P-2 Power Module, CU230P-2 Control Unit
- V4.7.6 and higher
- The converter is operated with a rated pulse frequency of at least 4 kHz.
- The converter can provide the rated voltage as listed in the catalog.

For SINAMICS G120 converters (from firmware version 4.7) the SIMOTICS GP/SD VSD4000 line can be selected in the SINAMICS converter via the STARTER software or the operator panel at the converter (Basic Operator Panel (BOP), Intelligent Operator Panel (IOP)) as motor category and can be addressed using the motor code number.

SINAMICS S120 system requirements:

- SINAMICS S120, PM240-2 Power Module and CU310
- SINAMICS S120 Booksize Motor Module and CU320-2
- FW 4.8 and higher

Rated voltage

The tolerance for the rated voltage is in accordance with EN 60034-1. A rated voltage is not specified. The rated motor voltages are selected so that when operated with a SINAMICS G120 converter, the available voltage is optimally utilized.

Insulation

The motors can be operated with SINAMICS G/S converters up to line voltages of 480 V when the permissible voltage peaks are complied with ($\hat{U}_{LL} \leq 3200$ V, $\hat{U}_{LE} \leq 2800$ V).

For converter operation with the power ratings specified in the catalog, the motors can be utilized corresponding to thermal class 155 (F) (service factor 1.2).

Preferred supply system configurations are TT systems and TN systems with neutral-point grounding. In the case of a fault when connected to an IT system (ground fault), the insulation is excessively stressed. In this case, the process should be terminated as quickly as possible ($t < 2$ h), and the fault resolved. We do not recommend operation in corner-grounded TN systems.

Noise

The maximum sound pressure levels should be taken from the selection and ordering data.

© Siemens AG 2018

Technical specifications (continued)

Separately driven fan

For the technical specifications of the separately driven fans, see page 1/80 "Technical specifications of separately driven fans".

Bearings

For converter operation, as a result of the basic principle employed, electrical bearing stress is created through the bearing lubricant film due to a voltage that is capacitively coupled in.

The physical cause of this is the common-mode voltage at the converter output that is inherent in the control method for a converter:
The sum of the three phase voltages is – in contrast to pure line operation – not equal to zero at every point in time.

In order to apply currents to the motor which are sinusoidal as far as possible (resulting in smoother running, lower oscillation torques, and lower stray losses), a high pulse frequency is required for the converter's output voltage. The related (very steep) switching edges of the converter output voltage (and also, therefore, of the common-mode voltage) cause correspondingly high capacitive currents and voltages on the machine's internal capacitances.

In the worst-case scenario, the capacitive voltage induced via the bearing can lead to random arcing through the bearing lubricating film, thus causing premature bearing aging or damage.

This physical effect, which occurs in isolated cases, has mostly been observed in connection with larger motors.

EMC-compliant installation of the drive system is a basic prerequisite for preventing premature bearing damage via bearing currents.

The most important measures for reducing bearing currents:

- Insulated motor bearing at the NDE

Recommended from frame size 225 and higher:

- Use cables with a symmetrical cable cross-section:

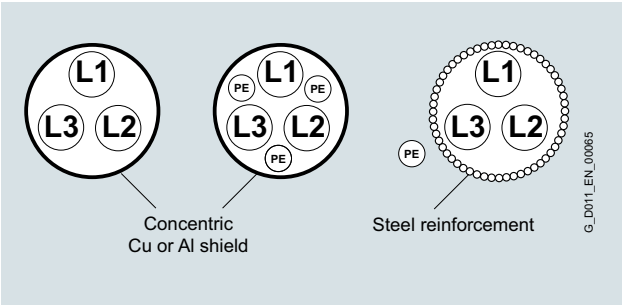

- Preference given to a line supply with isolated neutral point (IT system).
- Using grounding cables with low impedance over a wide frequency range (DC up to approximately 70 MHz): for example, braided copper ribbon cables, HF finely stranded wires.
- Separate HF equipotential-bonding cable between motor housing and driven machine.
- Separate HF equipotential-bonding cable between motor housing and converter PE busbar.
- 360° HF contacting of the cable shield on the motor housing and the converter PE busbar. This can be achieved using EMC screwed glands on the motor side and EMC shield clips on the converter side, for example.

© Siemens AG 2018

Technical specifications (continued)

Torque limits (continuous duty)

The thermal torque limit characteristics of the SIMOTICS GP/SD VSD4000 line define the maximum load torque for uninterrupted duty (S1) over the complete speed control range. The characteristics are different for all of the cooling methods. The speed control range is limited by the mechanical speed limit, which depends on the motor's mechanical design.

The following statements are valid for the following diagrams:

- Thermally, from $^1/_{10}$ of the rated speed up to the full rated speed, the rated torque and the curve of the suitable power unit are possible, utilizing the thermal class 155 (temperature class F).
- At rated speed, SF 1.2 is possible.
- The curves of the next largest power unit and the maximum power curve can be achieved in continuous-operation periodic duty (S6 - x %), and briefly in S9 duty, provided that $P_{2\,(S9)} = P_{2\,N}$ is not exceeded.

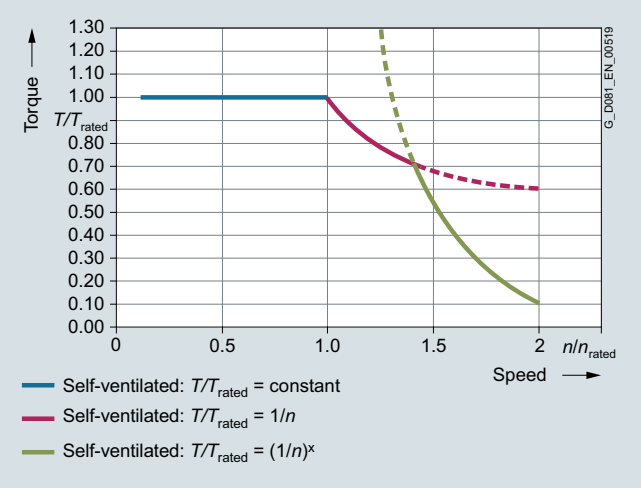

Torque limit for SIMOTICS GP/SD VSD4000 line self-ventilated

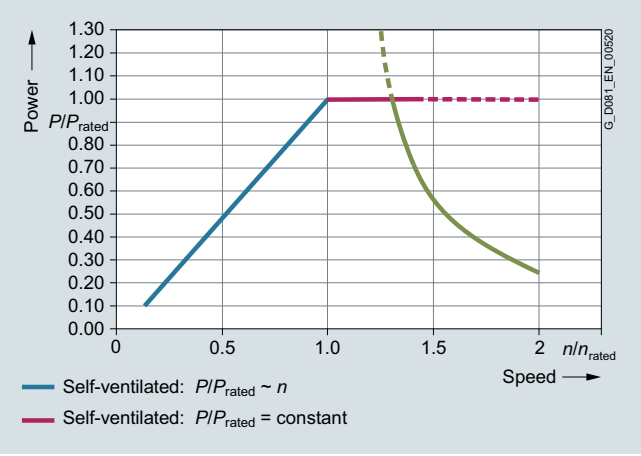

Power limit for SIMOTICS GP/SD VSD4000 line self-ventilated

Maximum overload torques/thermal limit characteristic

The maximum overload torque output from the motor is defined by the limit characteristic and the available converter output current.

Thermally, the motors can have a continuous overload with service factor 1.2 (SF 1.2). However, in this case, the limit torque characteristic must be observed. The speed control range is limited by the mechanical speed limit, which depends on the motor's mechanical design.

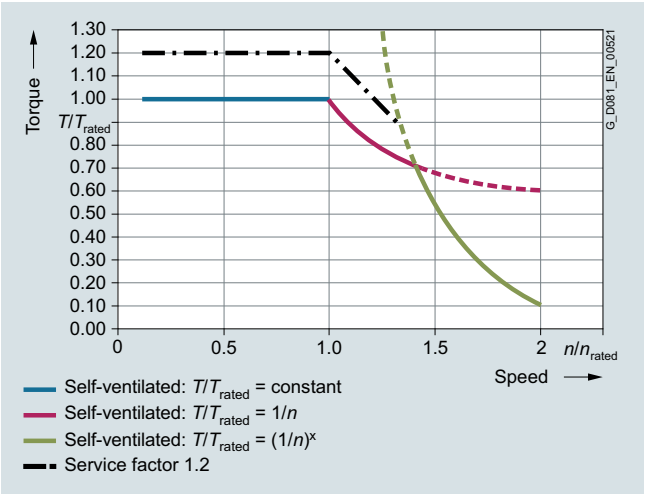

Overload torque characteristic SIMOTICS GP/SD VSD4000 line

© Siemens AG 2018

Technical specifications (continued)

The torque and power characteristics for converter configuration for the SIMOTICS GP/SD 1FP1.04-0DB2 motor, frame size 80 with the particular motor voltage and circuit:

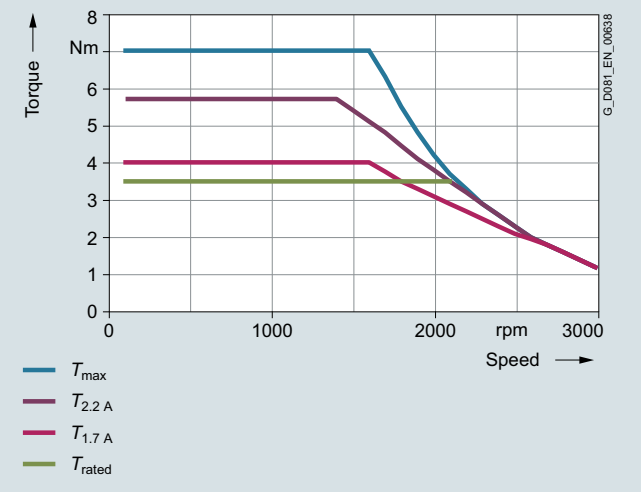

Torque limit for 380 VY (50-Hz characteristic)

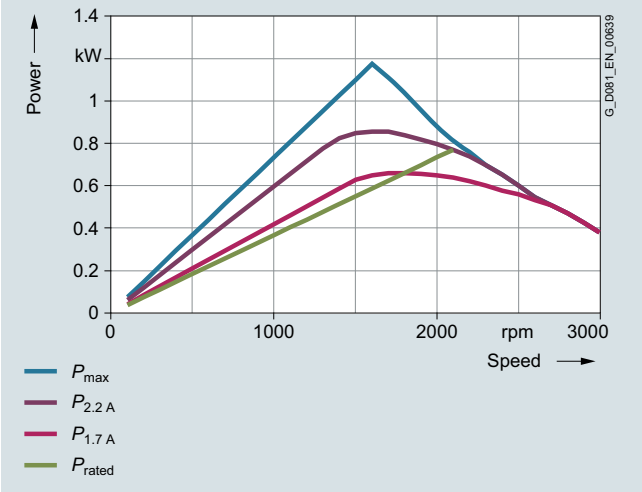

Power limit for 380 VY (50-Hz characteristic)

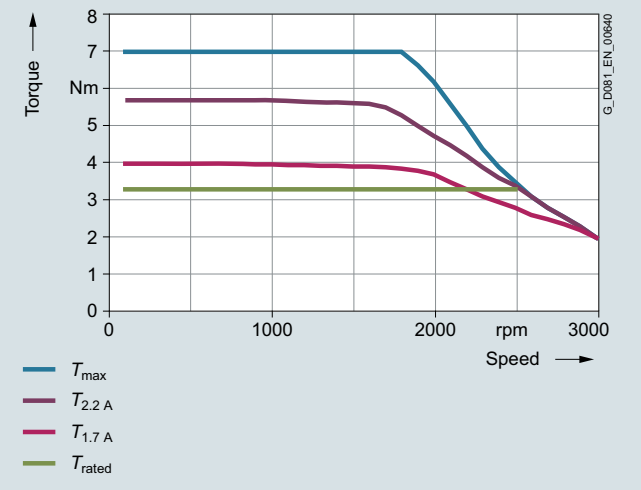

Torque limit for 440 VY (60-Hz characteristic)

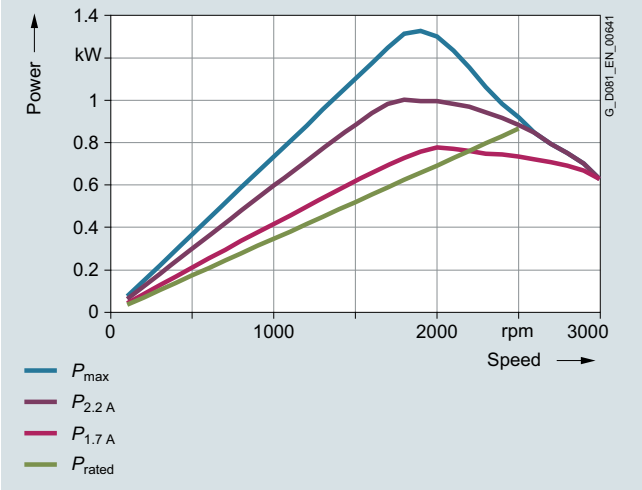

Power limit for 440 VY (60-Hz characteristic)

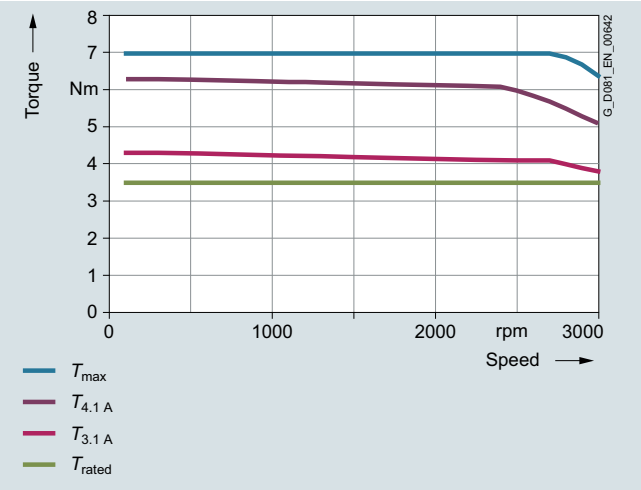

Torque limit for 380 VΔ (87-Hz characteristic)

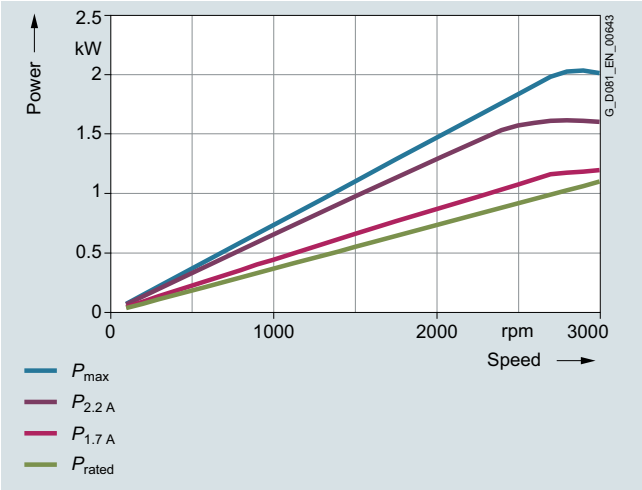

Power limit for 380 VΔ (87-Hz characteristic)

© Siemens AG 2018

Technical specifications (continued)

The torque and power characteristics for converter configuration for the SIMOTICS GP 1FP1.04-0DB3 motor, frame size 80 with the particular motor voltage and circuit:

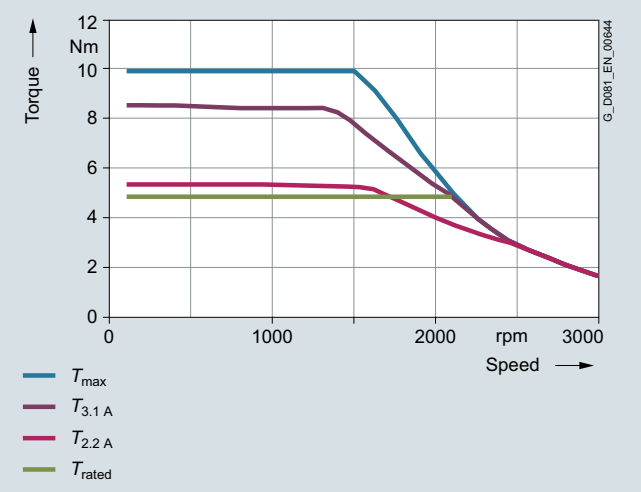

Torque limit for 380 VY (50-Hz characteristic)

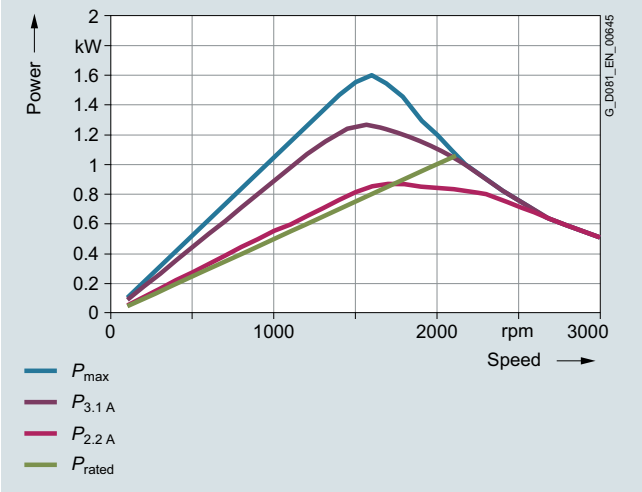

Power limit for 380 VY (50-Hz characteristic)

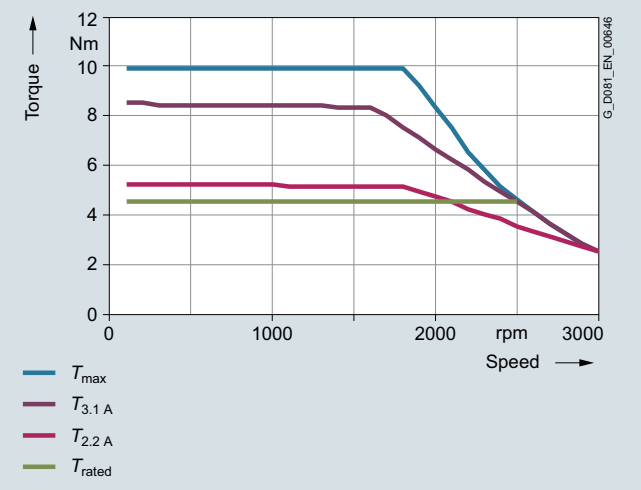

Torque limit for 440 VY (60-Hz characteristic)

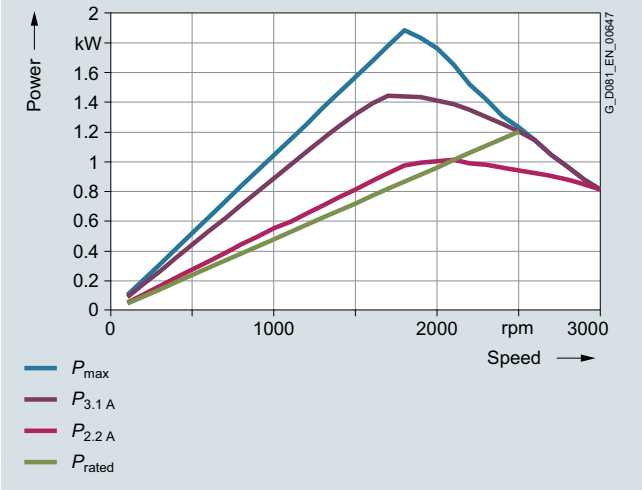

Power limit for 440 VY (60-Hz characteristic)

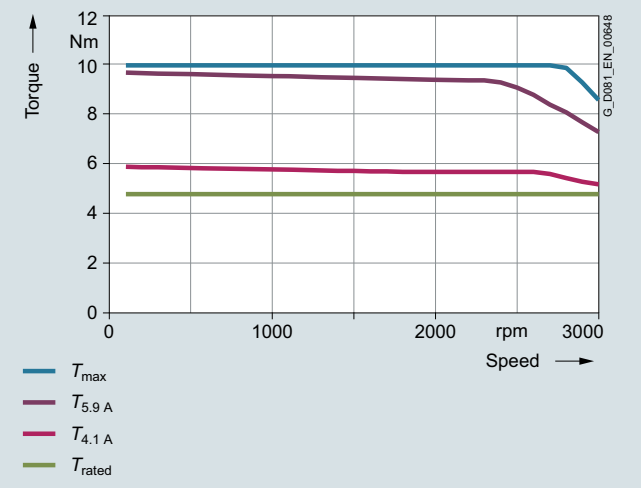

Torque limit for 380 VΔ (87-Hz characteristic)

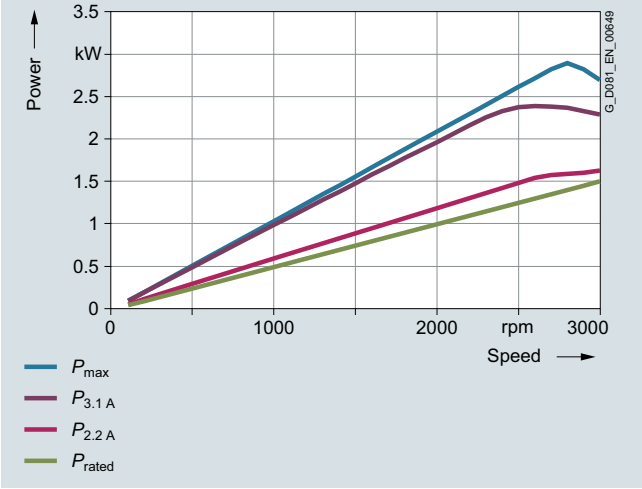

Power limit for 380 VΔ (87-Hz characteristic)

© Siemens AG 2018

Technical specifications (continued)

The torque and power characteristics for converter configuration for the SIMOTICS GP 1FP1.04-1BB2 motor, frame size 112 with the particular motor voltage and circuit:

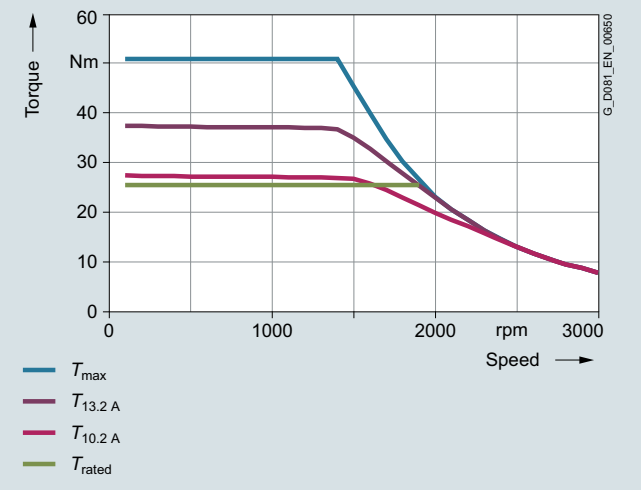

Torque limit for 380 VY (50-Hz characteristic)

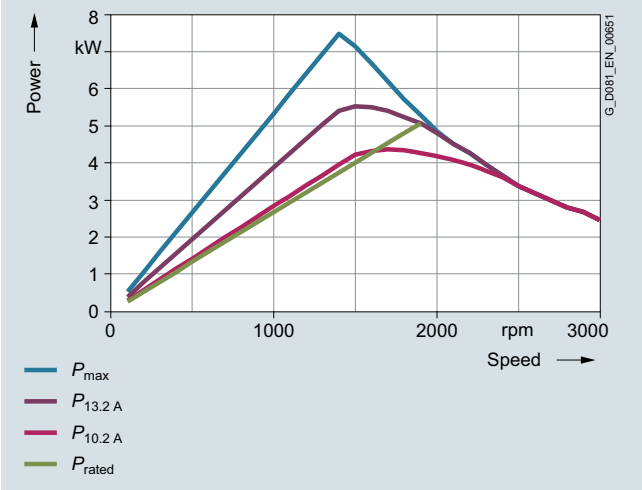

Power limit for 380 VY (50-Hz characteristic)

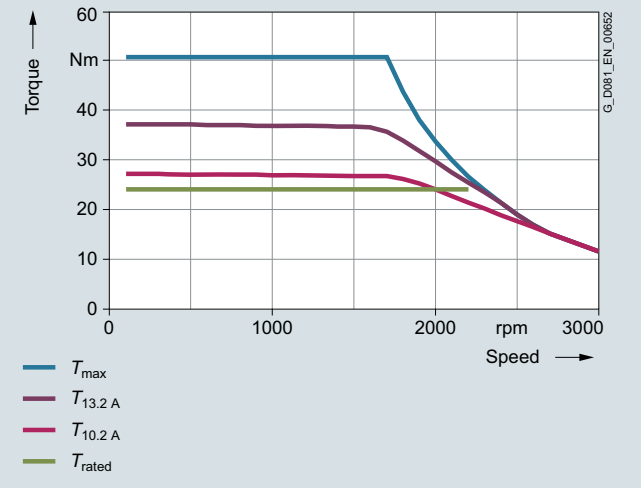

Torque limit for 440 VY (60-Hz characteristic)

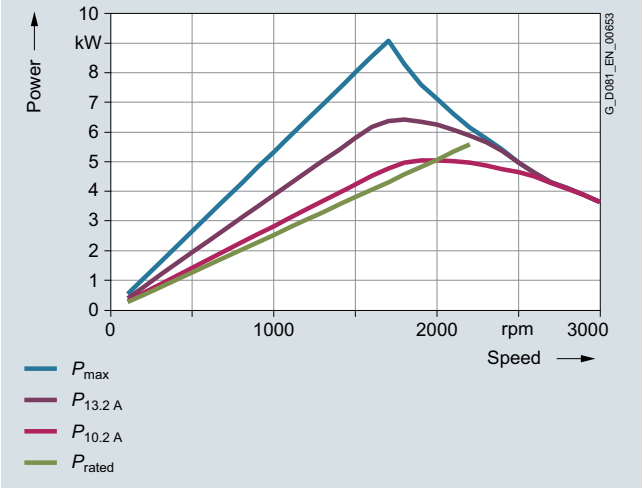

Power limit for 440 VY (60-Hz characteristic)

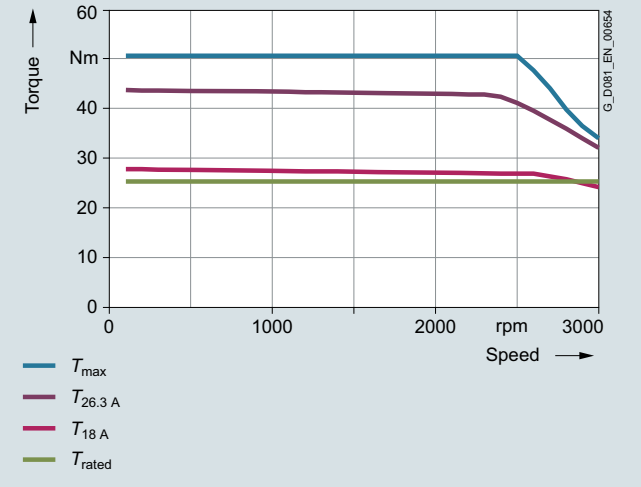

Torque limit for 380 VΔ (87-Hz characteristic)

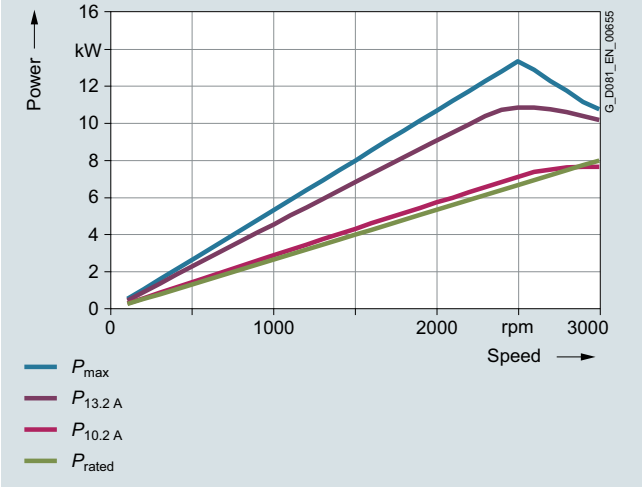

Power limit for 380 VΔ (87-Hz characteristic)

© Siemens AG 2018

Technical specifications (continued)

The torque and power characteristics for converter configuration for the SIMOTICS GP 1FP1.04-1CB0 motor, frame size 132 with the particular motor voltage and circuit:

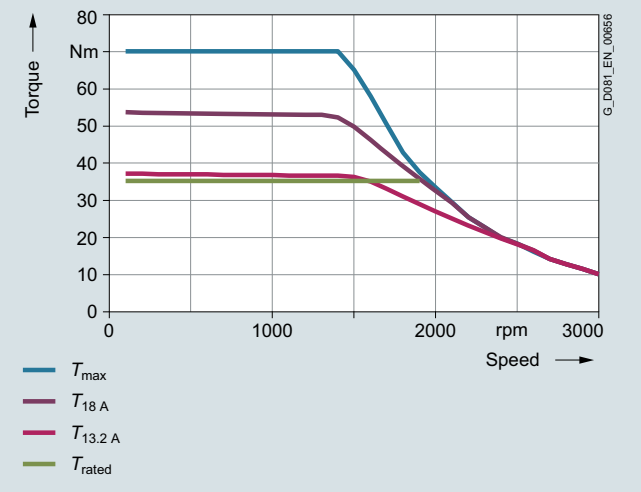

Torque limit for 380 VY (50-Hz characteristic)

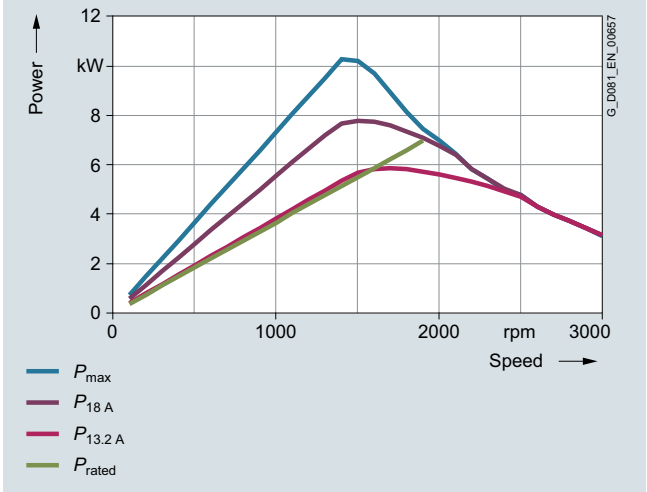

Power limit for 380 VY (50-Hz characteristic)

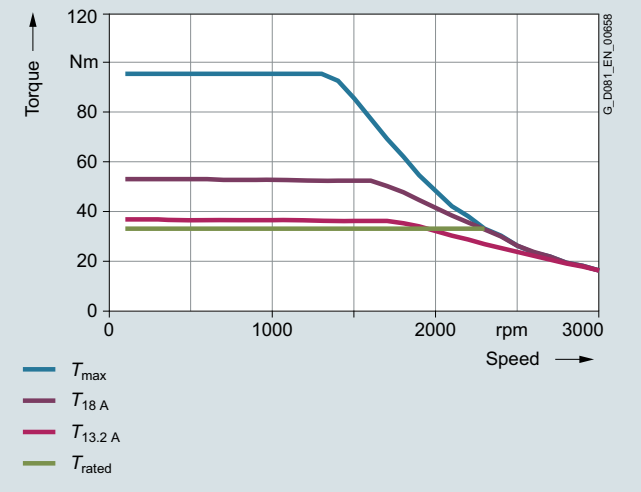

Torque limit for 440 VY (60-Hz characteristic)

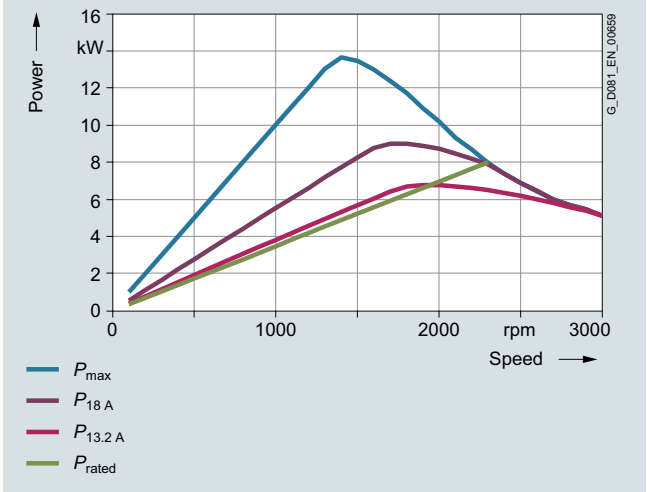

Power limit for 440 VY (60-Hz characteristic)

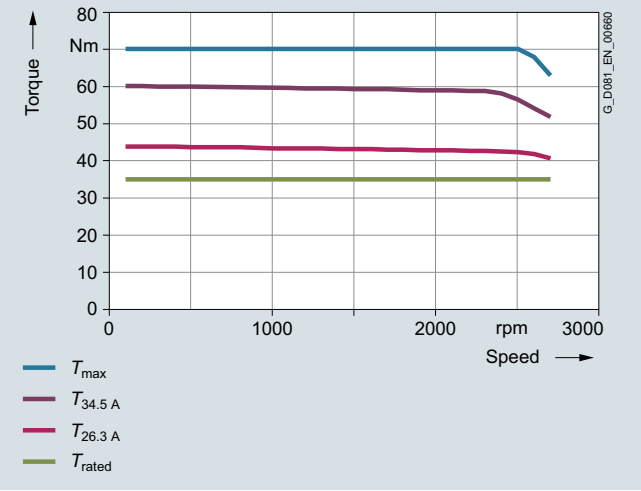

Torque limit for 380 VΔ (87-Hz characteristic)

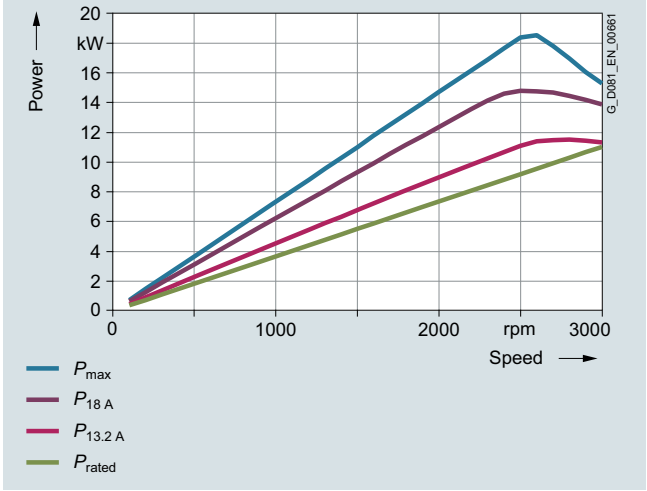

Power limit for 380 VΔ (87-Hz characteristic)

© Siemens AG 2018

Technical specifications (continued)

The torque and power characteristics for converter configuration for the SIMOTICS GP 1FP1.04-1CB2 motor, frame size 132 with the particular motor voltage and circuit:

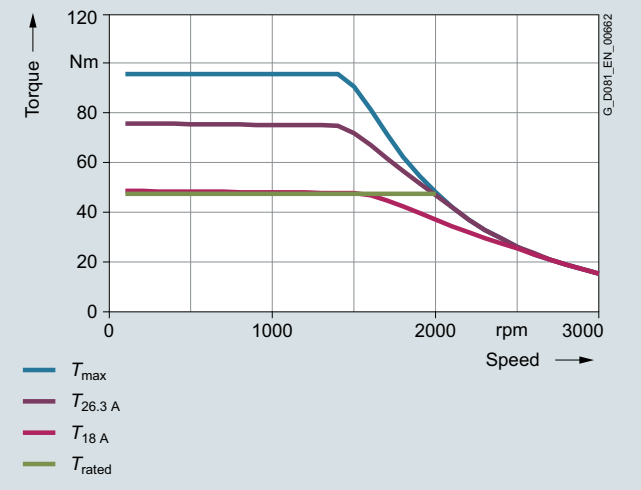

Torque limit for 380 VY (50-Hz characteristic)

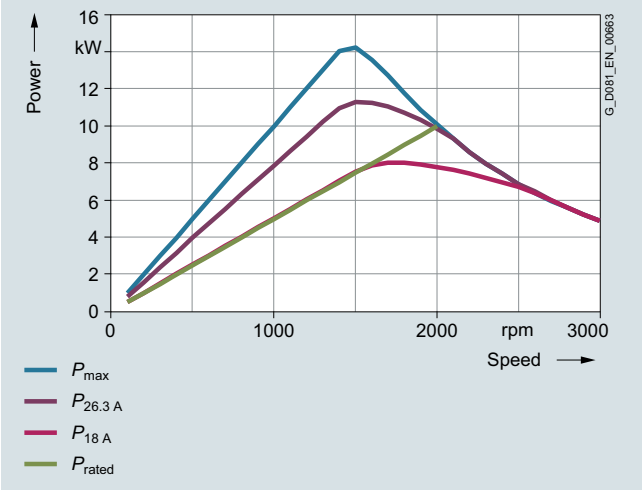

Power limit for 380 VY (50-Hz characteristic)

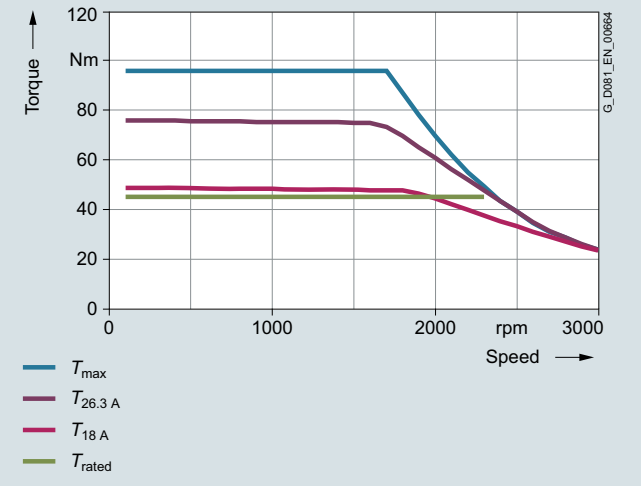

Torque limit for 440 VY (60-Hz characteristic)

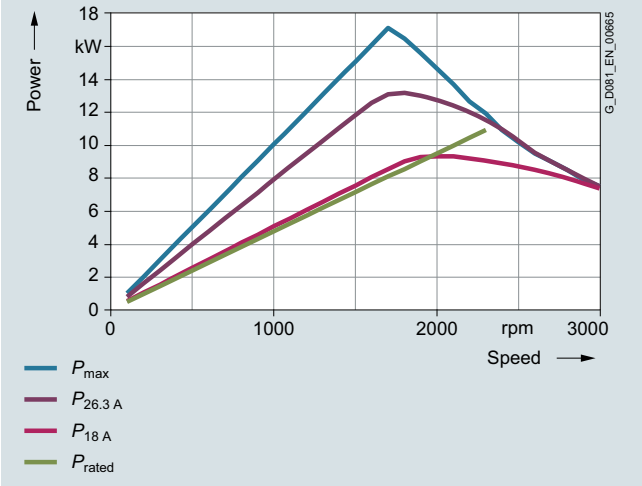

Power limit for 440 VY (60-Hz characteristic)

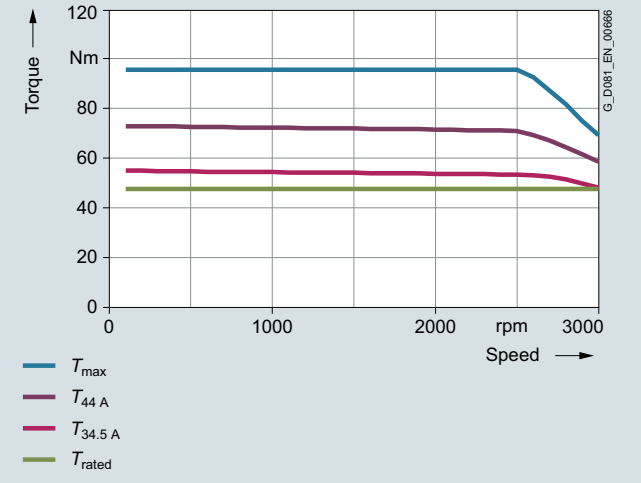

Torque limit for 380 VΔ (87-Hz characteristic)

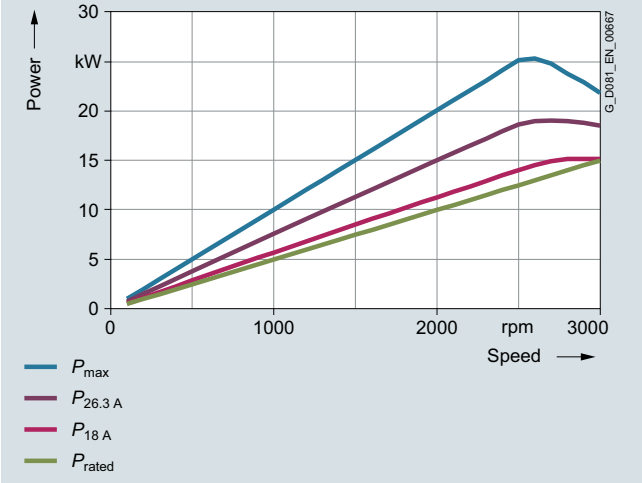

Power limit for 380 VΔ (87-Hz characteristic)

© Siemens AG 2018

Technical specifications (continued)

The torque and power characteristics for converter configuration for the SIMOTICS GP 1FP1.04-1DB2 motor, frame size 160 with the particular motor voltage and circuit:

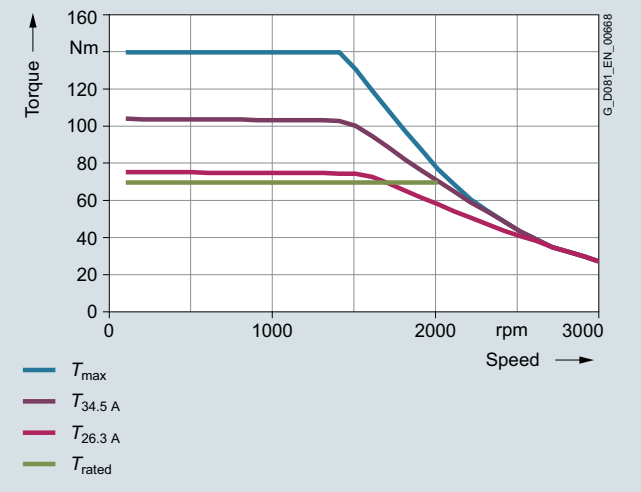

Torque limit for 380 VY (50-Hz characteristic)

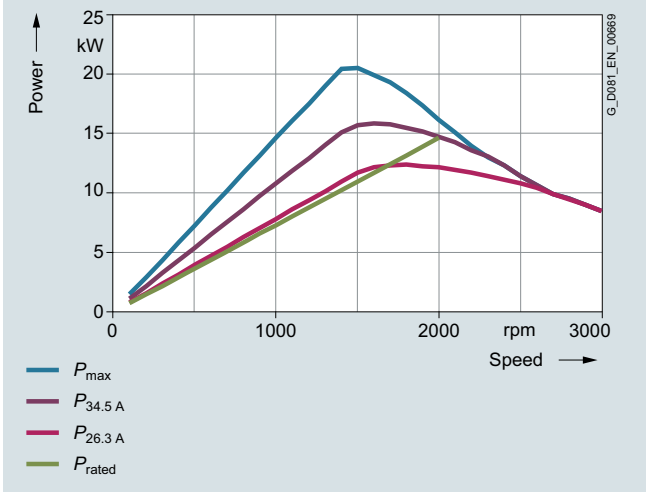

Power limit for 380 VY (50-Hz characteristic)

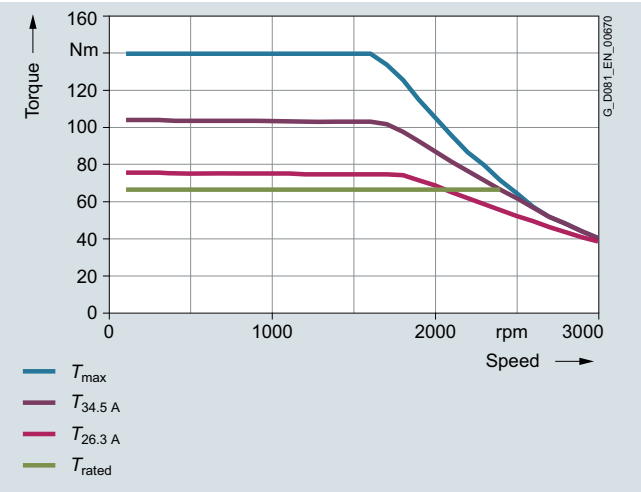

Torque limit for 440 VY (60-Hz characteristic)

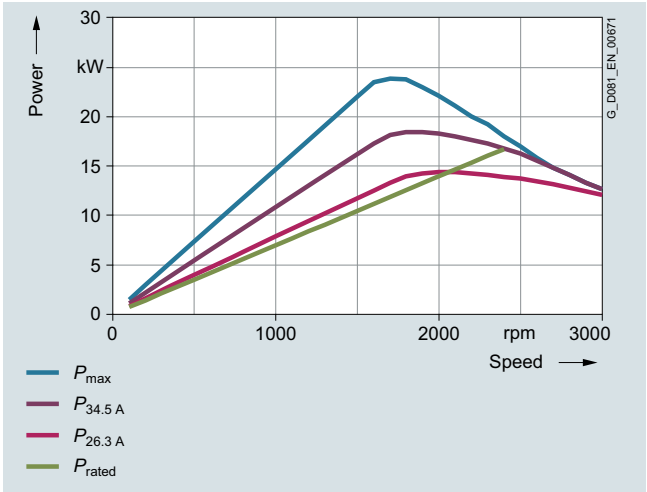

Power limit for 440 VY (60-Hz characteristic)

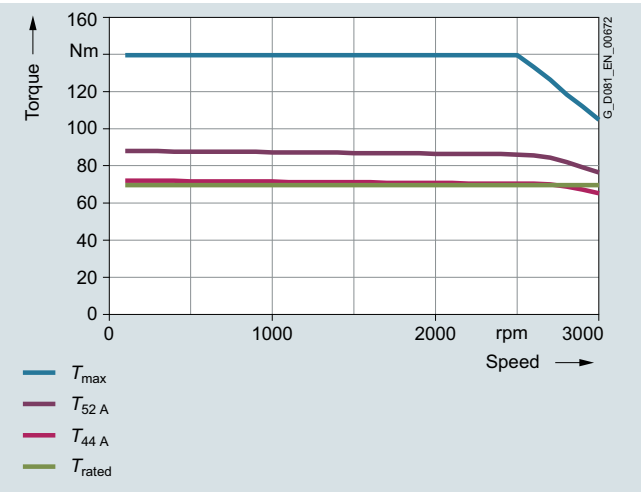

Torque limit for 380 VΔ (87-Hz characteristic)

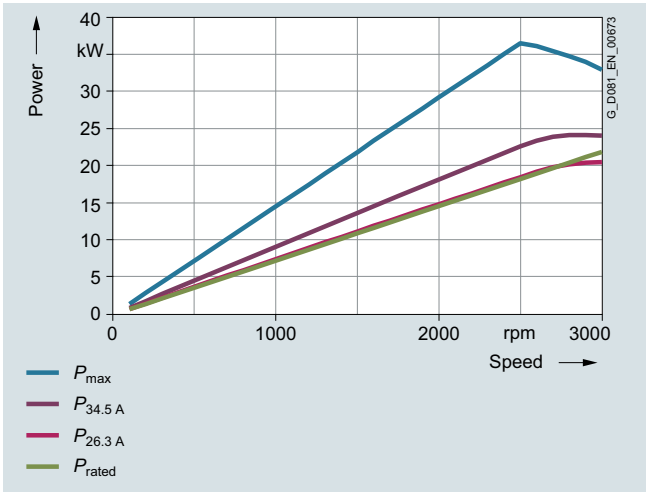

Power limit for 380 VΔ (87-Hz characteristic)

© Siemens AG 2018

Technical specifications (continued)

The torque and power characteristics for converter configuration for the SIMOTICS GP 1FP1.04-1DB4 motor, frame size 160 with the particular motor voltage and circuit:

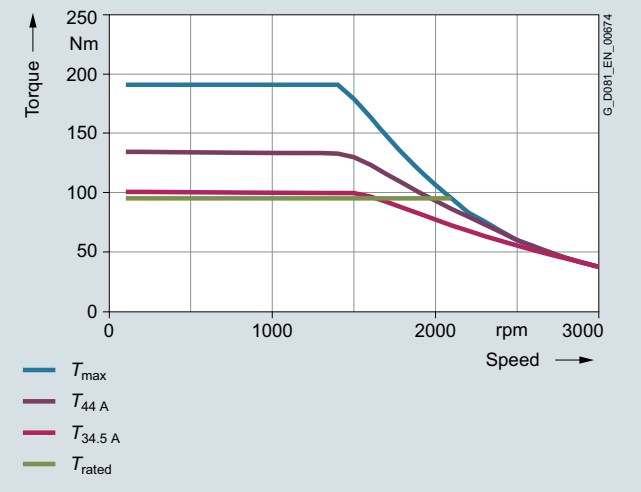

Torque limit for 380 VY (50-Hz characteristic)

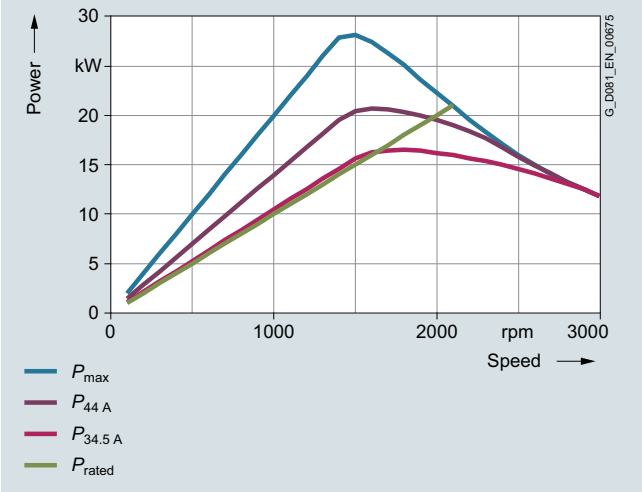

Power limit for 380 VY (50-Hz characteristic)

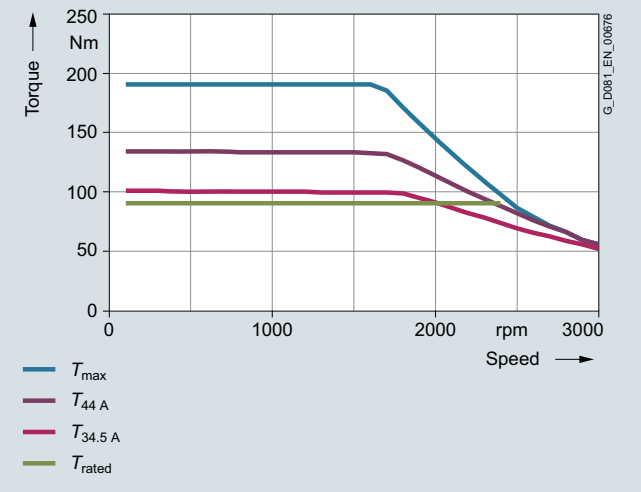

Torque limit for 440 VY (60-Hz characteristic)

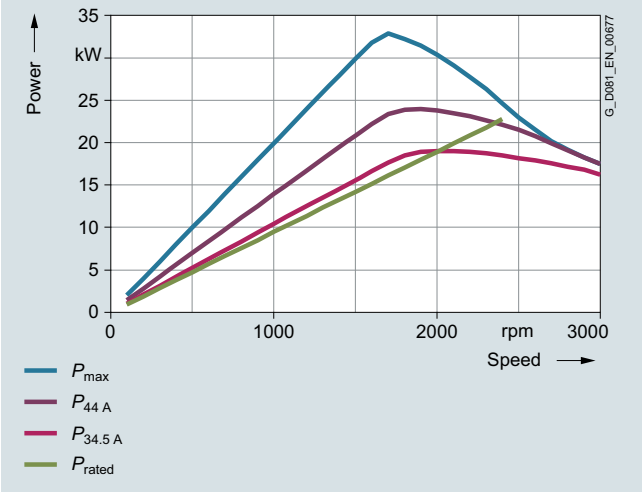

Power limit for 440 VY (60-Hz characteristic)

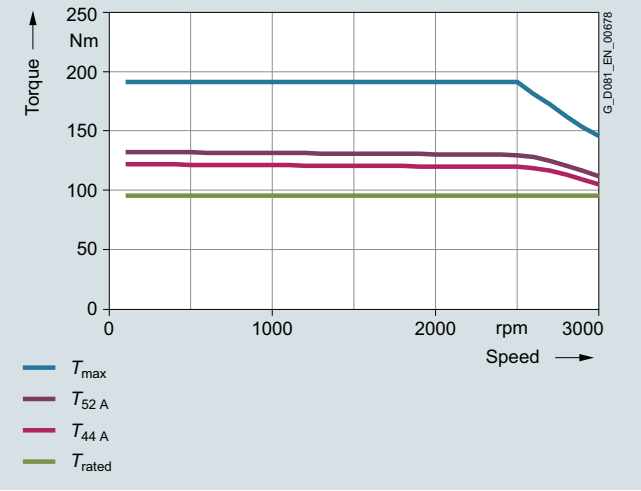

Torque limit for 380 VΔ (87-Hz characteristic)

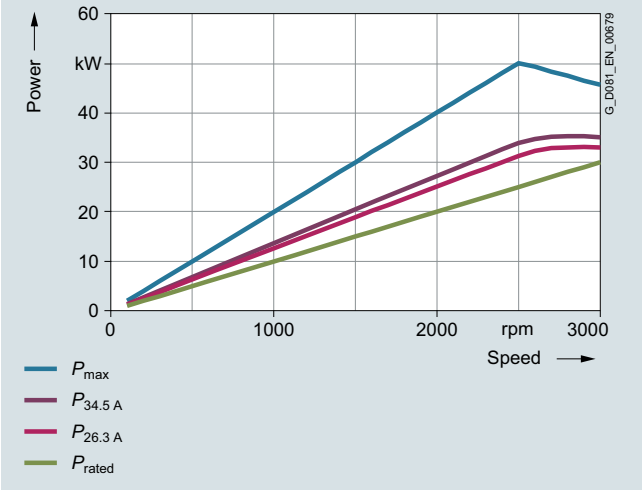

Power limit for 380 VΔ (87-Hz characteristic)

© Siemens AG 2018

Technical specifications (continued)

The torque and power characteristics for converter configuration for the SIMOTICS SD 1FP1.14-1EB2 motor, frame size 180 with the particular motor voltage and circuit:

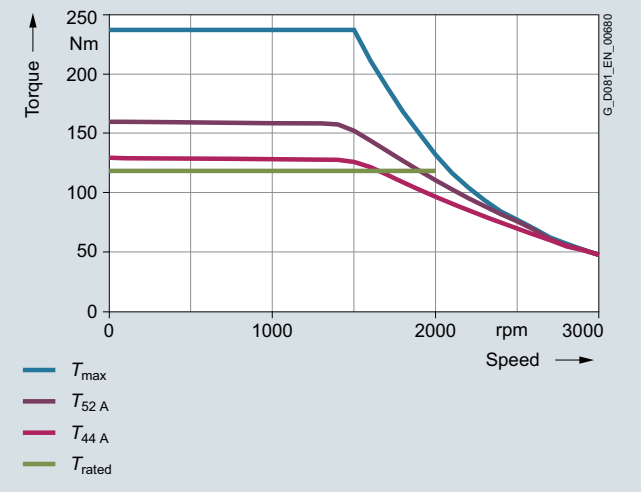

Torque limit for 380 VY (50-Hz characteristic)

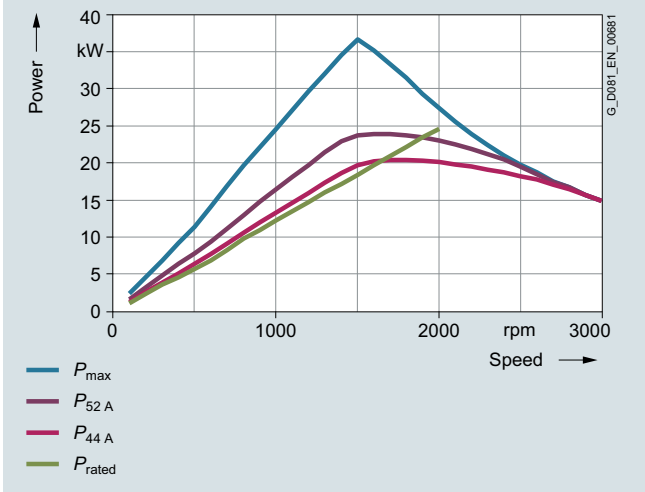

Power limit for 380 VY (50-Hz characteristic)

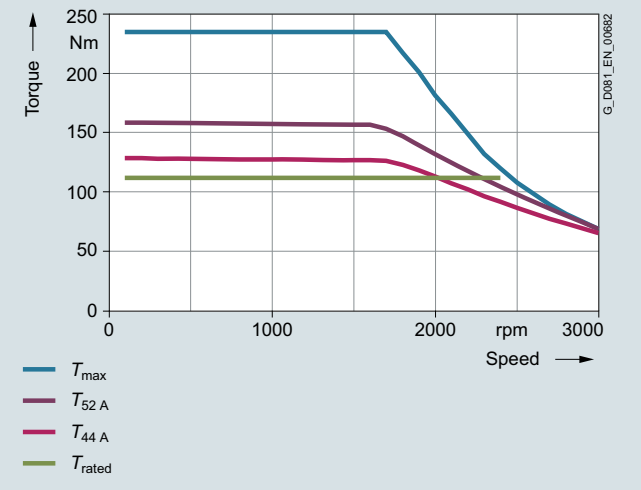

Torque limit for 440 VY (60-Hz characteristic)

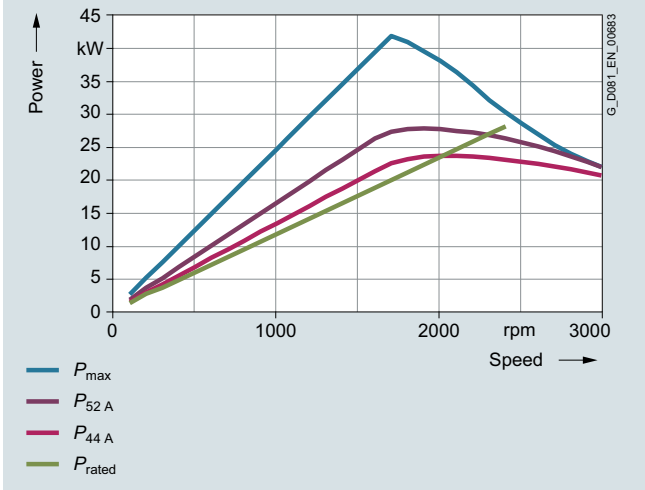

Power limit for 440 VY (60-Hz characteristic)

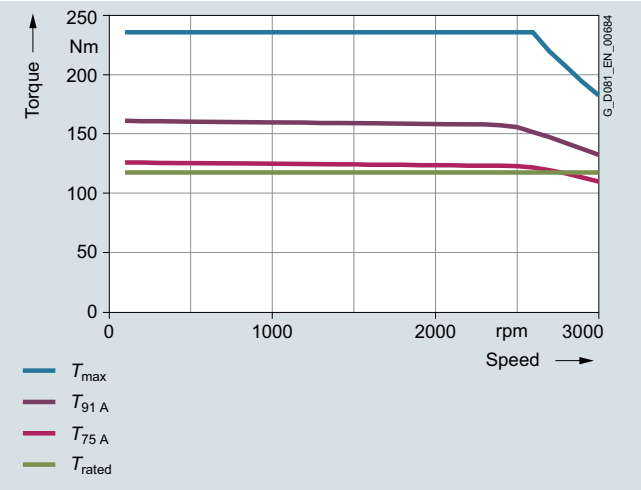

Torque limit for 380 VΔ (87-Hz characteristic)

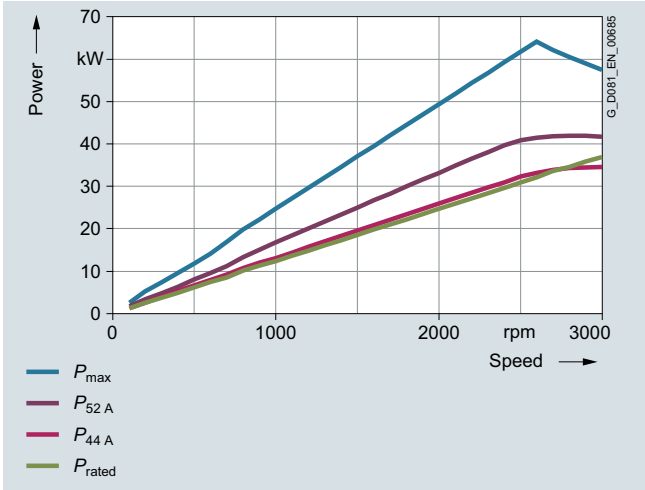

Power limit for 380 VΔ (87-Hz characteristic)

© Siemens AG 2018

Technical specifications (continued)

The torque and power characteristics for converter configuration for the SIMOTICS SD 1FP1.14-1EB4 motor, frame size 180 with the particular motor voltage and circuit:

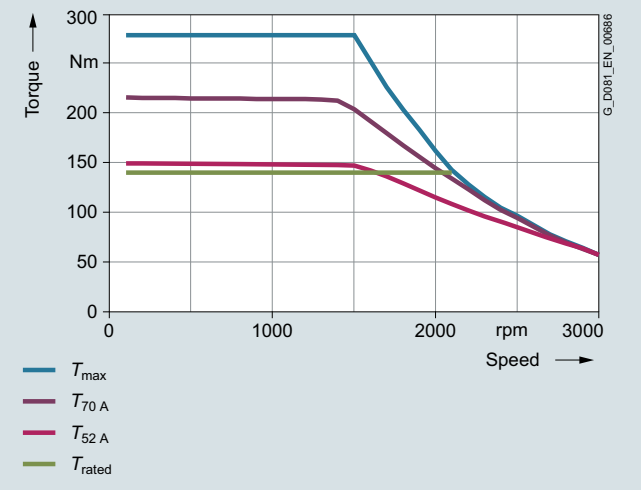

Torque limit for 380 VY (50-Hz characteristic)

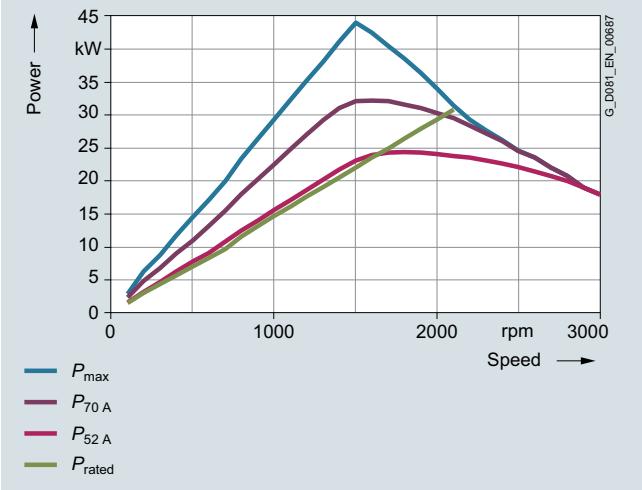

Power limit for 380 VY (50-Hz characteristic)

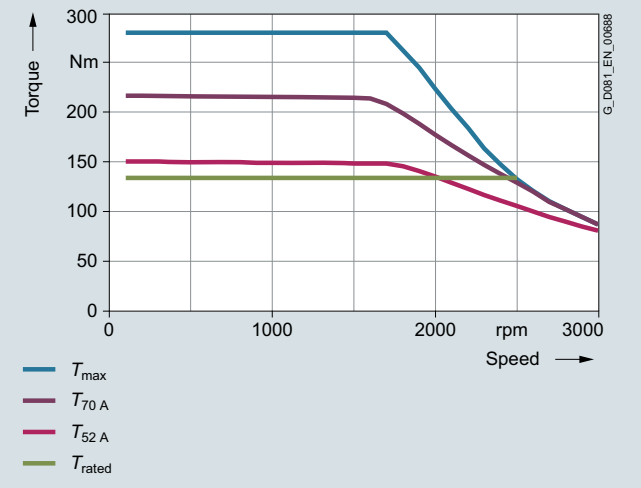

Torque limit for 440 VY (60-Hz characteristic)

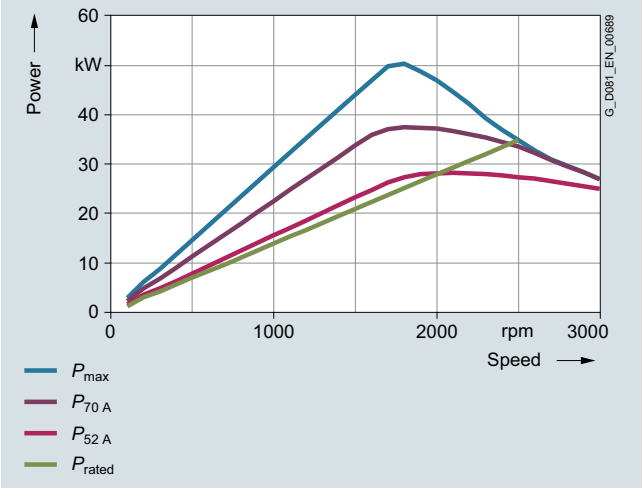

Power limit for 440 VY (60-Hz characteristic)

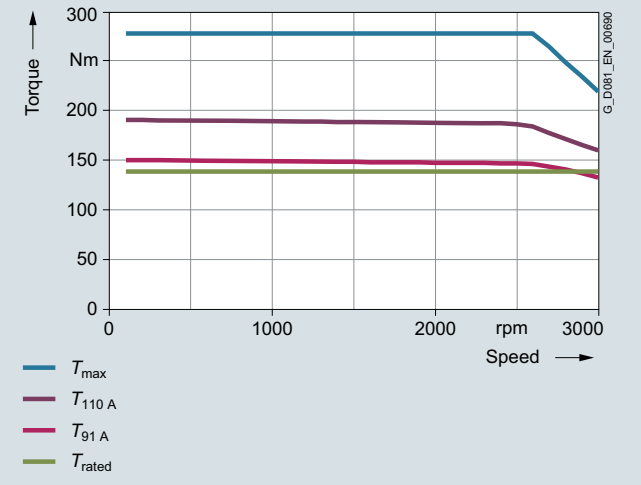

Torque limit for 380 VΔ (87-Hz characteristic)

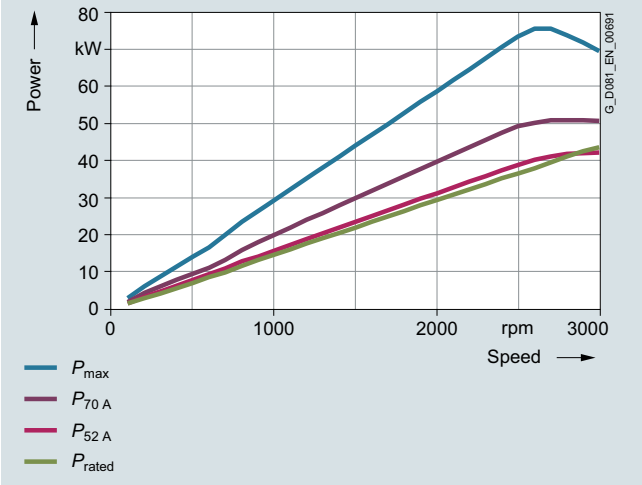

Power limit for 380 VΔ (87-Hz characteristic)

© Siemens AG 2018

Technical specifications (continued)

The torque and power characteristics for converter configuration for the SIMOTICS SD 1FP1.14-1EF2 motor, frame size 180 with the particular motor voltage and circuit:

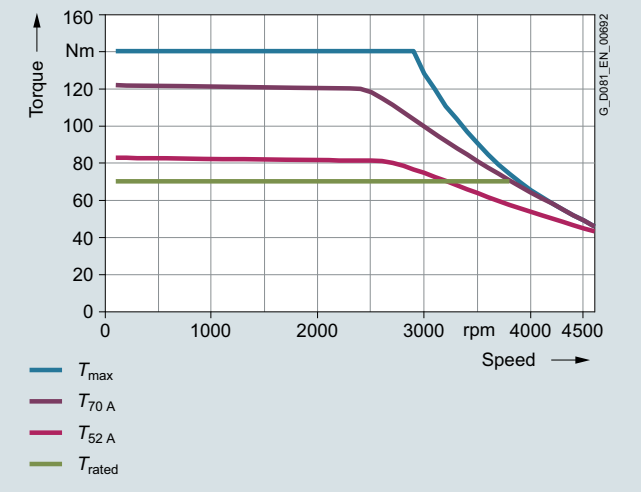

Torque limit for 380 VY (50-Hz characteristic)

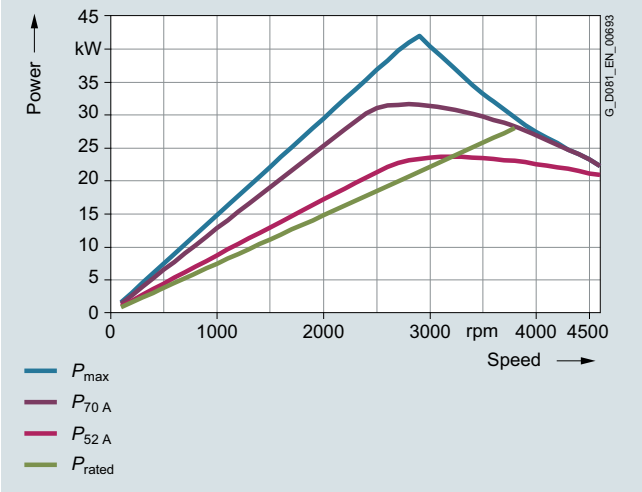

Power limit for 380 VY (50-Hz characteristic)

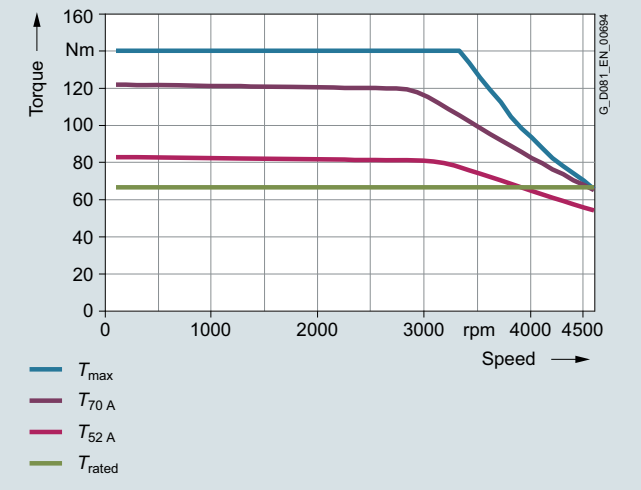

Torque limit for 440 VY (60-Hz characteristic)

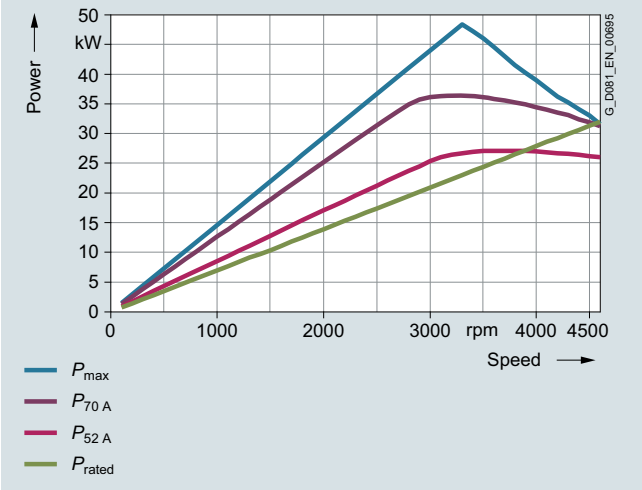

Power limit for 440 VY (60-Hz characteristic)

© Siemens AG 2018

Technical specifications (continued)

The torque and power characteristics for converter configuration for the SIMOTICS SD 1FP1.14-2AB5 motor, frame size 200 with the particular motor voltage and circuit:

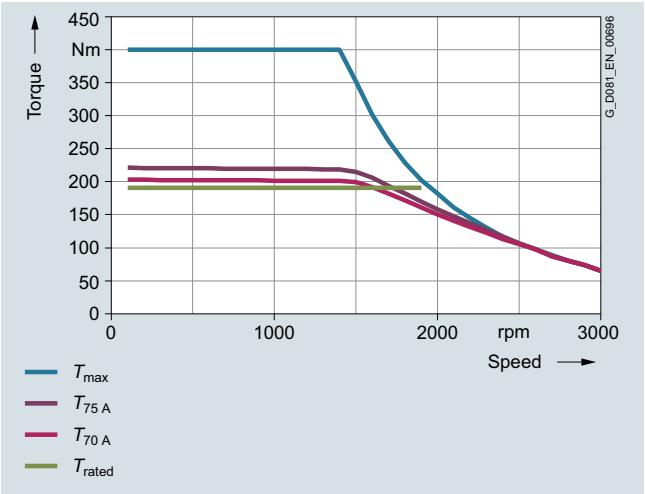

Torque limit for 380 VY (50-Hz characteristic)

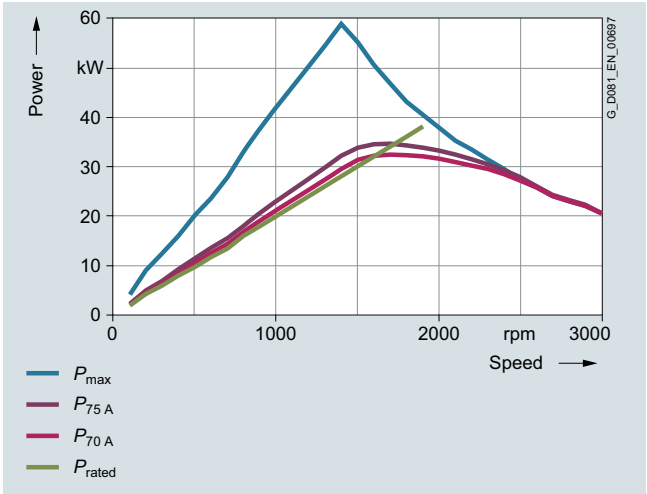

Power limit for 380 VY (50-Hz characteristic)

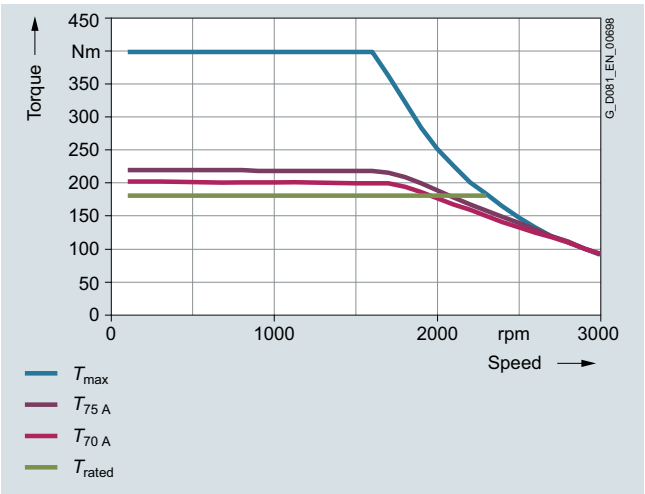

Torque limit for 440 VY (60-Hz characteristic)

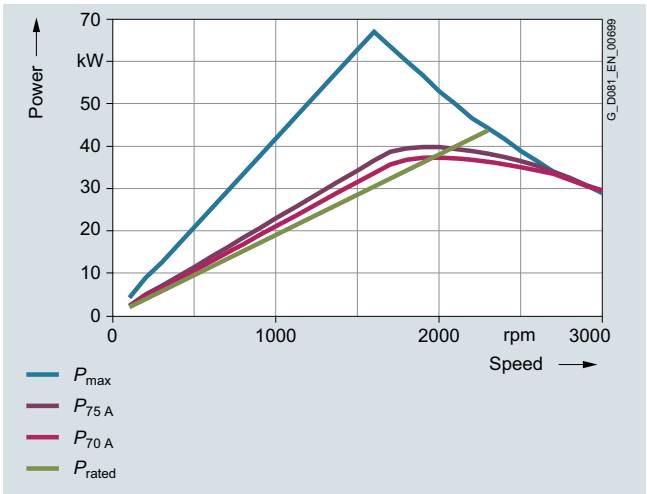

Power limit for 440 VY (60-Hz characteristic)

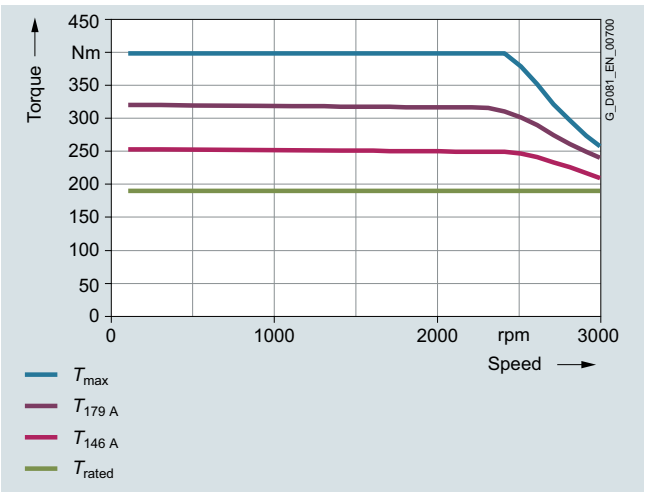

Torque limit for 380 VΔ (87-Hz characteristic)

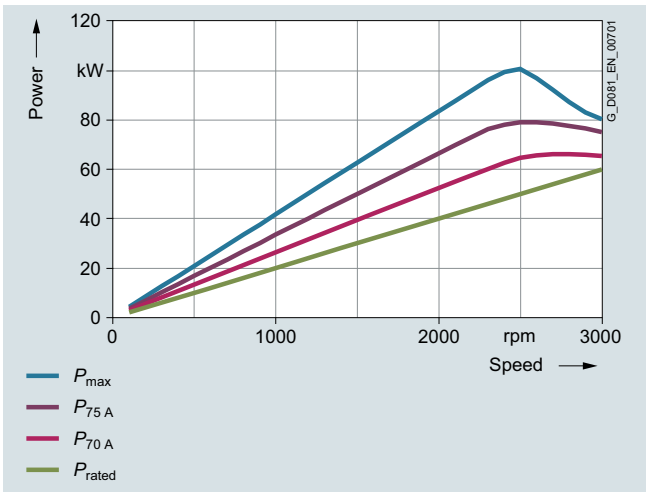

Power limit for 380 VΔ (87-Hz characteristic)

© Siemens AG 2018

Technical specifications (continued)

The torque and power characteristics for converter configuration for the SIMOTICS SD 1FP1.14-2AF4 motor, frame size 200 with the particular motor voltage and circuit:

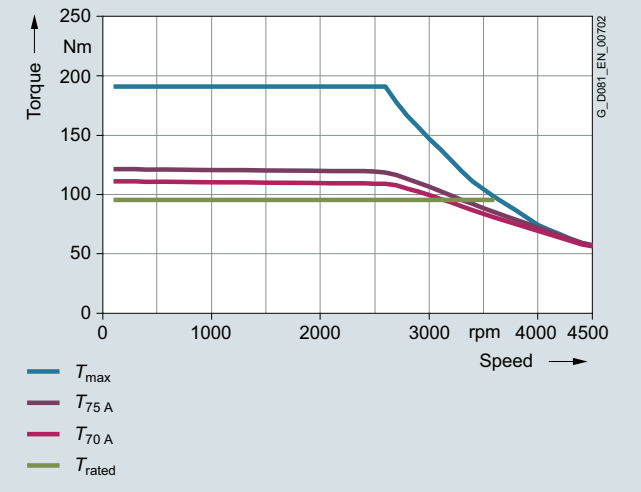

Torque limit for 380 VY (50-Hz characteristic)

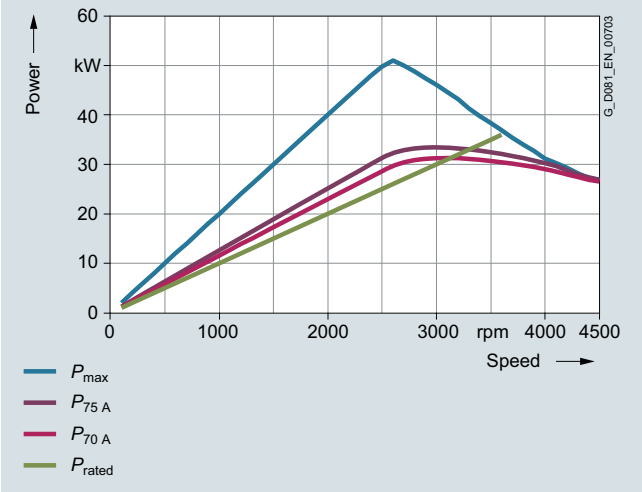

Power limit for 380 VY (50-Hz characteristic)

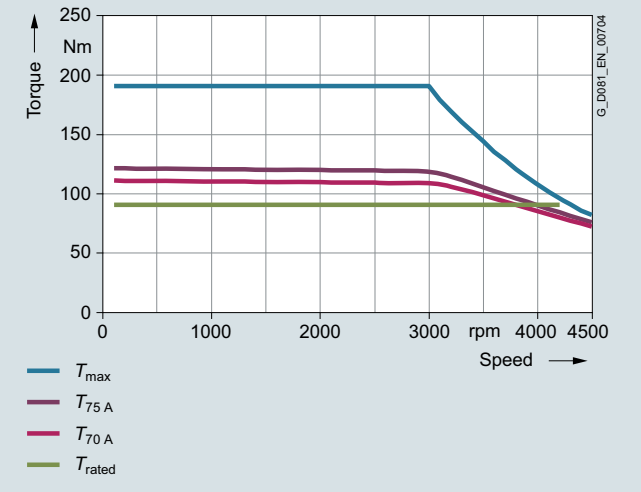

Torque limit for 440 VY (60-Hz characteristic)

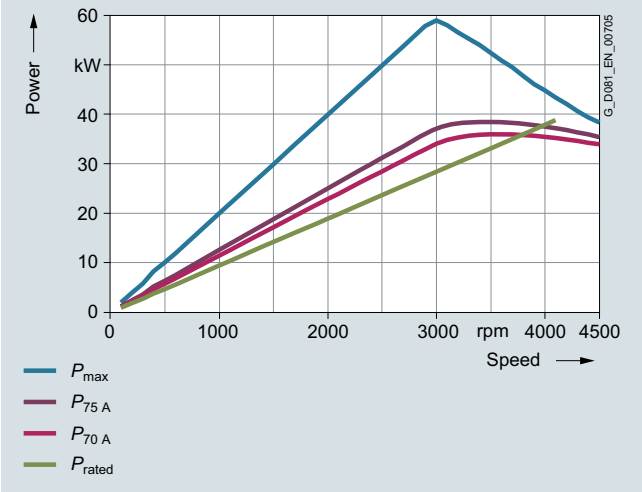

Power limit for 440 VY (60-Hz characteristic)

© Siemens AG 2018

Technical specifications (continued)

The torque and power characteristics for converter configuration for the SIMOTICS SD 1FP1.14-2AF5 motor, frame size 200 with the particular motor voltage and circuit:

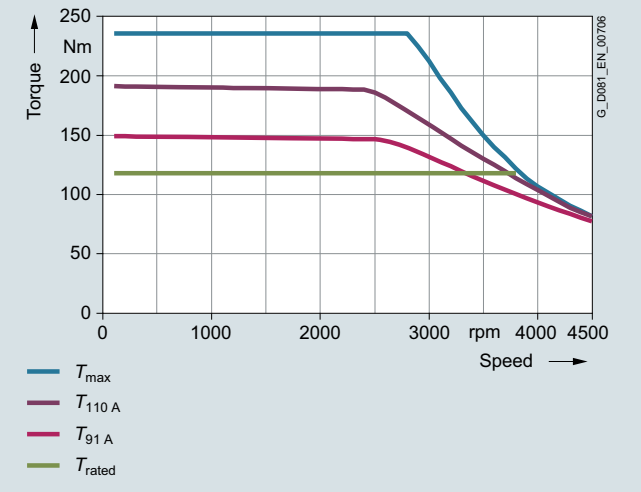

Torque limit for 380 VY (50-Hz characteristic)

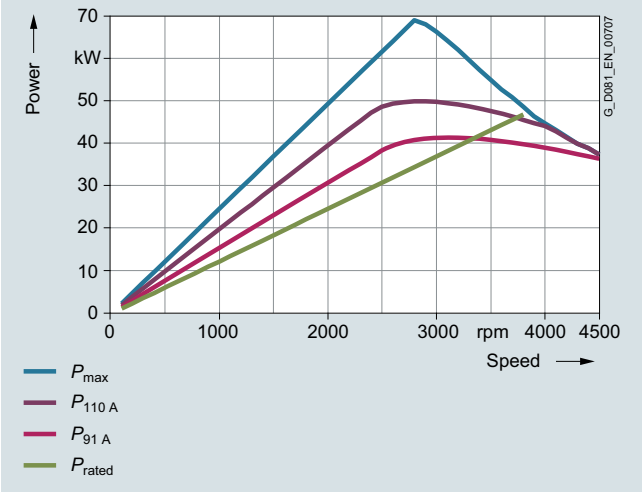

Power limit for 380 VY (50-Hz characteristic)

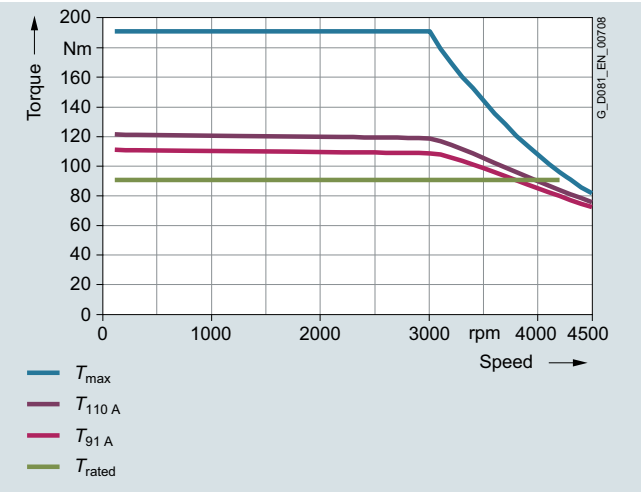

Torque limit for 440 VY (60-Hz characteristic)

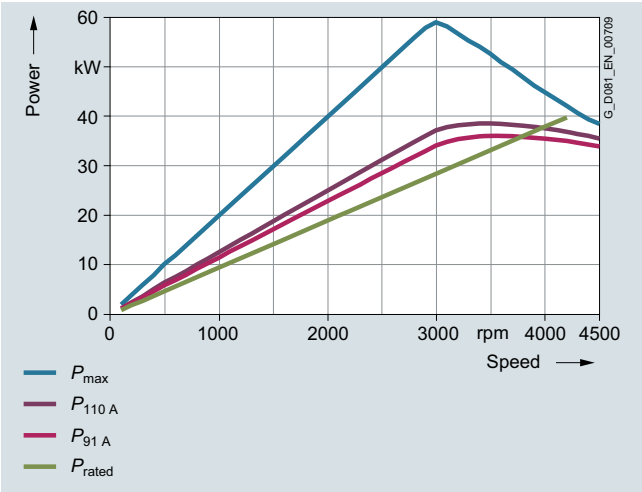

Power limit for 440 VY (60-Hz characteristic)

© Siemens AG 2018

Technical specifications (continued)

Additional information

Mechanical stress and grease lifetime

When motors are operated at speeds above the rated speed, the mechanical smooth running operation and the bearings are subjected to greater mechanical stress. This reduces the grease lifetime and the bearing lifetime.

Above 100 Hz, the motors must be balanced for twice the rated frequency; it can be expected that the lubrication intervals and bearing lifetime are significantly reduced.

Motor protection

A motor protection function can be implemented using the I^2t sensing function implemented in the converter software. If required, more precise motor protection can be afforded by direct temperature measurement using KTY84 sensors (standard scope of delivery) or PTC thermistors in the motor winding. Some converters from Siemens determine the motor temperature using the resistance of the temperature sensor. They can be set to a required temperature for alarm and tripping. When ordering PTC thermistors or other temperature sensors to monitor the cooling temperature, the KTY84 sensors, otherwise provided as standard, are eliminated. As described above, KTY84 sensors are evaluated in the SINAMICS converters.

Motor connection

When connecting the motors, it is important to consider the restrictions for 1LE1 line motors as well as the maximum conductor cross-sections permitted for the converter.

Operating data for 50 Hz/60 Hz/87 Hz characteristics

SIMOTICS GP/SD VSD4000 line motors are designed for operation with 50-Hz, 60-Hz and 87-Hz characteristics (87-Hz characteristic up to frame size 200).

Operation with the 50-/60-Hz characteristic requires Y (star or wye) connection; operation with the 87-Hz characteristic requires Δ connection.

The corresponding power data are stamped on the rating plate as standard. An ordering option is not required.

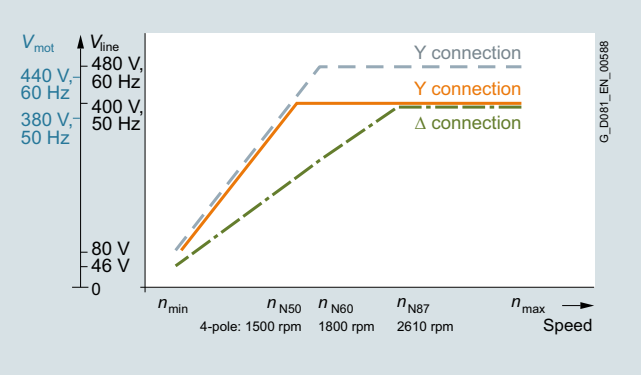

Operating characteristics of SIMOTICS GP/SD VSD4000 line motors [1)]

Maximum operating speed

The maximum operating speed is limited by the mechanical speed limit of the motors as well as the available converter output frequency.

A significant increase in the sound pressure level can be expected when operating the motor above its rated speed (field weakening range).

Mechanical speed limits SIMOTICS GP/SD VSD4000 line:

Rated power	Frame size	Mechanical speed limit		
		50 Hz SIMOTICS		100 Hz SIMOTICS
		GP	SD	SD
kW		n_{max} rpm	n_{max} rpm	n_{max} rpm
0.55	80	3200	3200	–
0.75	80	3200	3200	–
4	112	3200	3200	–
5.5	132	3200	3200	–
7.5	132	3200	3200	–
11	160	3000	3200	–
15	160	3000	3200	–
18.5	180	2610	3000	4600
22	180	2610	3000	4500
30	200	2610	3000	4500

International use

As special converter motors, SIMOTICS GP/SD VSD4000 line motors are presently not subject to any minimum efficiency requirements in the EU and USA/Canada. However, other national certificates may be required (e.g. CSA-S safety in Canada).

[1)] With V4.7 SP3, only a 50 Hz characteristic is possible.

© Siemens AG 2018

Technical specifications (continued)

Load characteristics for the line supply voltage: 3 AC 50 Hz 400 V

Load characteristic $T \sim n^2$	T = const. Speed control range			SIMOTICS GP/SD VSD4000 line motors	SINAMICS G120 converters
	1:2	1:4	1:10		
P_{max} kW	P_{max} kW	P_{max} kW	P_{max} kW	Motor type	Converter type
Rated speed 1500 rpm					
	from 750 rpm	from 375 rpm	from 150 rpm		
0.55	0.27	0.13	0.05	1FP1.04-0DB2.-....	6SL3210-1PE11-8.L0
0.75	0.37	0.18	0.07	1FP1.04-0DB3.-....	6SL3210-1PE12-3.L0
4	2	1	0.4	1FP1.04-1BB2.-....	6SL3210-1PE21-1.L0
5.5	2.65	1.07	0.33	1FP1.04-1CB0.-....	6SL3210-1PE21-4.L0
7.5	3.6	1.45	0.45	1FP1.04-1CB2.-....	6SL321.-1PE21-8.L0
11	5.31	2.14	0.66	1FP1.04-1DB2.-....	6SL3210-1PE22-7.L0
15	7.2	2.91	0.9	1FP1.04-1DB4.-....	6SL321.-1PE23-3.L0
18.5	8.94	3.61	1.11	1FP1.04-1EB2.-....	6SL3210-1PE23-8.L0
22	10.61	4.29	1.32	1FP1.04-1EB4.-....	6SL3210-1PE24-5.L0
30	14.48	5.85	1.8	1FP1.04-2AB5.-....	6SL3210-1PE26-0.L0
Rated speed 3000 rpm					
	from 1500 rpm	from 750 rpm	from 300 rpm		
22	11	5.5	2.2	1FP1514-1EF2.-....	6SL3210-1PE24-5.L0
30	15	7.5	3	1FP1514-2AF4.-....	6SL3210-1PE26-5.L0
37	18.5	9.2	3.7	1FP1514-2AF5.-....	6SL3210-1PE28-8.L0

Note:

The converter recommendation applies to standard ambient conditions (40 °C; 1000 m above sea level).

If, as a result of different ambient conditions, the rated motor power is significantly reduced, under certain circumstances, another converter is the optimum solution. Here, please use the configuration options for converters in the DT Configurator.

System power loss according to EN 50598-2 (draft)

The drive system comprising SIMOTICS GP/SD VSD4000 line synchronous-reluctance motors and SINAMICS G120 converters is, as a result of the minimal system power losses, especially suitable for applications in the full and partial load range that are optimized to achieve minimum lifecycle costs.

General conditions:

- CU230P-2 Control Unit
- Line voltage: 400 V 3 AC 50/60 Hz
- Output voltage: Up to 0.95 x line supply input voltage
- Inverter pulse frequency: 4 kHz to 90 kW; 2 kHz from 110 kW
- In the standby mode, the converter does not supply any power to the motor (the inverter pulses are inhibited)
- In the standby operating mode, the Control Unit is operated from the internal or external 24 V DC electronics power supply
- Converters with vector control for synchronous-reluctance motors and flux reduction
- The operating points defined in the subsequent table already take into account the standby portions

SIMOTICS GP/SD VSD4000 line synchronous-reluctance motors with SINAMICS G120 PM240-2 Power Modules

Rated power	SIMOTICS GP/SD VSD4000 1FP10/1FP15	Frame size	PM240-2 Power Module	Frame size	System power loss, relative $P_{V,rel}$ as a % referred to P_{rated} Operating points								IES class acc. to EN 50598-2
					at partial load [1]							at rated load [1]	
					0/25	0/50	0/100	50/25	50/50	50/100	100/50	100/100	
kW	Type		Type		%	%	%	%	%	%	%	%	
Line voltage 400 V 3 AC, 50/60 Hz, rated speed 1500 rpm													
0.55	1FP1.04-0DB2.-....	80 M	6SL3210-1PE11-8.L0	FSA	11.30	13.50	20.38	10.31	13.90	22.00	15.24	24.43	IES 2
0.75	1FP1.04-0DB3.-....	80 M	6SL3210-1PE12-3.L0	FSA	8.91	10.69	16.43	8.50	11.61	18.50	13.15	20.38	IES 2
4	1FP1.04-1BB2.-....	112 M	6SL3210-1PE21-1.L0	FSA	3.31	4.99	10.59	3.81	6.04	12.07	7.31	13.83	IES 2
5.5	1FP1.04-1CB0.-....	132 S	6SL3210-1PE21-4.L0	FSB	2.63	3.91	8.08	2.82	4.61	9.63	5.95	11.61	IES 2
7.5	1FP1.04-1CB2.-....	132 M	6SL321■-1PE21-8.L0	FSB	2.24	3.47	7.82	2.73	4.39	9.22	5.90	11.32	IES 2
11	1FP1.04-1DB2.-....	160 M	6SL3210-1PE22-7.L0	FSC	1.97	3.01	6.57	2.16	3.63	7.81	4.68	9.26	IES 2
15	1FP1.04-1DB4.-....	160 L	6SL321■-1PE23-3.L0	FSC	1.65	2.67	5.76	1.77	2.97	6.79	3.77	8.01	IES 2
18.5	1FP1.04-1EB2.-....	180 M	6SL3210-1PE23-8.L0	FSD	1.71	2.44	4.83	1.91	3.10	6.10	4.17	7.55	IES 2
22	1FP1.04-1EB4.-....	180 L	6SL3210-1PE24-5.L0	FSD	1.66	2.37	4.71	1.85	3.09	5.97	4.19	7.46	IES 2
30	1FP1.04-2AB5.-....	200 L	6SL3210-1PE26-0.L0	FSD	1.57	2.34	4.78	1.75	2.88	5.93	3.72	7.19	IES 2
Line voltage 400 V 3 AC, 50/60 Hz, rated speed 3000 rpm													
22	1FP1514-1EF4.-....	180 L	6SL3210-1PE24-5.L0	FSD	1.46	2.01	3.88	2.02	3.14	5.49	5.53	8.49	IES 2
30	1FP1514-2AF4.-....	200 L	6SL3210-1PE26-0.L0	FSD	1.3	1.88	3.91	1.83	2.89	5.36	4.77	7.95	IES 2
37	1FP1514-2AF5.-....	200 L	6SL3210-1PE28-8.L0	FSD	1.29	1.76	3.26	1.8	2.77	4.73	4.72	7.15	IES 2

Standard	**0**
Push-through	**1**

[1] Output frequency, rel. [%] referred to the rated speed/ Torque, rel. [%] referred to the rated torque T_{rated}.

© Siemens AG 2018

Selection and ordering data

The article number consists of a combination of digits and letters and is divided into three hyphenated blocks to provide a better overview, e.g.:
1FP1504-1DB42-1GF4-Z
H00

The first block (positions 1 to 7) identifies the motor type. The second block (positions 8 to 12) defines the motor frame size and length, the number of poles and in some cases the frequency/voltage. In the third block (positions 13 to 16), the frequency/voltage, type of construction and further design features are encoded.

For deviations in the second and third block from the catalog codes either **Z** or **90** should be used as appropriate.

Ordering data:

- Complete Article No. and order code(s) or plain text
- If a quotation has been requested, please specify the quotation number in addition to the Article No.
- When ordering a complete motor as a spare part, please specify the works serial No. for the previously supplied motor as well as the Article No.

Structure of the Article No.:		Position:	1	2	3	4	5	6	7	-	8	9	10	11	12	-	13	14	15	16		
1st to 4th position: Digit, letter, letter, digit	**Three-phase synchronous-reluctance motor** Self-ventilated by fan mounted on and driven by the rotor		**1**	**F**	**P**	**1**																
5th position: Digit	SIMOTICS GP – aluminum housing SIMOTICS SD – cast-iron housing						**0** **5**															
6th position: Digit	Standard version Gen 1 Standard version Gen 2							**0** **1**														
7th position: Digit	**Efficiency class** Super Premium Efficiency								**4**													
8th and 9th position: Digit, letter	**Motor frame size** (frame size as a combination of shaft height and overall length, encoded)										**0** ... **2**	**A** ... **E**										
10th position: Letter	**No. of poles** B, F: 4-pole												**B** **F**									
11th position: Digit	**Laminated core length**													**0** **2** **4** **5**								
12th and 13th position: 2 digits	**Motor voltage and frequency** 380 V 3 AC, 50 Hz/440 V 3 AC, 60 Hz/380 V 3 AC, 87 Hz														**2**		**1**					
14th position: Letter	**Type of construction** (encoded with A ... V)																	**A** ... **V**				
15th position: Letter	**Motor protection** (encoded with B ... Z; Z requires order code Q.. (e.g. Q3A); F = standard version with integrated KTY84 temperature sensor)																		**B** ... **Z**			
16th position: Digit	**Terminal box position** 4: Terminal box top (normal version), 5: Terminal box right, 6: Terminal box left																			**4** ... **6**		
	Special order versions: encoded – additional short code required not encoded – additional plain text required																				**-**	**Z**

Ordering example:

Selection criteria	Requirement	Structure of the Article No.
1FP10 motor type	Standard motor for converter operation SIMOTICS GP VSD4000 line, aluminum version, rated power at $P_{rated\ 50}$ with 15 kW, $P_{rated\ 60}$ with 17.3 kW or $P_{rated\ 87}$ with 23.5 kW	**1FP1004-■■■■■-■■■■**
Motor frame size	160 L	**1FP1004-1D■4■-■■■■**
No. of poles	4-pole	**1FP1004-1DB4■-■■■■**
Motor voltage and frequency	380 V 3 AC, 50 Hz/440 V 3 AC, 60 Hz/380 V 3 AC, 87 Hz	**1FP1004-1DB42-1■■■**
Type of construction with special version	IM V5 with protective cover [1]	**1FP1004-1DB42-1C■■-Z** **H00**
Motor protection	Motor protection with PTC thermistors with 1 or 3 embedded temperature sensors for tripping	**1FP1004-1DB42-1CB■-Z** **H00**
Terminal box position	Terminal box right (viewed from DE)	**1FP1004-1DB42-1CB5-Z** **H00**

[1] Standard without protective cover – the protective cover is defined with order code **H00** and must be ordered in addition to the Article No. with **-Z** and this order code.

© Siemens AG 2018

Self-ventilated, enclosed motors – line voltage 400 V, 50 Hz/480 V, 60 Hz/400 V, 87 Hz

Selection and ordering data

P_{rated} 50 Hz, 400 V	P_{rated} 60 Hz, 480 V	P_{rated} 87 Hz, 400 V	Frame size	Connection	Operating values at rated power f_{rated}	T_{rated}	$\eta_{rated, 4/4}$ for converter operation	$\cos\varphi_{rated, 4/4}$	I_{rated}	1FP10.4 aluminum series Version specifically for converter operation Article No.
kW	kW	kW			Hz	Nm	%		A	
• Insulation: Thermal class 155 (temperature class F), IP55 degree of protection, utilization in accordance with thermal class F according to B										
• Operation with a SINAMICS G120 converter with uncontrolled infeed – rated voltage 380 V, 50 Hz/440 V, 60 Hz/380 V, 87 Hz										
1500 rpm	1800 rpm	2610 rpm	4-pole							
0.55			80 M	Y	50	3.5	83.9	0.63	1.6	1FP1004-0DB2 ■-■■■■
	0.63			Y	60	3.4	84.0	0.62	1.6	
		0.95		Δ	87	3.5	87.4	0.62	2.7	
0.75			80 M	Y	50	4.8	85.7	0.62	2.2	1FP1004-0DB3 ■-■■■■
	0.86			Y	60	4.6	85.5	0.62	2.2	
		1.3		Δ	87	4.8	88.8	0.62	3.6	
4			112 M	Y	50	25.5	91.1	0.67	10.0	1FP1004-1BB2 ■-■■■■
	4.55			Y	60	24.0	91.0	0.68	9.6	
		6.9		Δ	87	25.5	92.0	0.67	17.0	
5.5			132 S	Y	50	35.0	91.9	0.70	13.0	1FP1004-1CB0 ■-■■■■
	6.3			Y	60	33.5	92.4	0.70	12.8	
		9.5		Δ	87	35.0	91.3	0.70	22.5	
7.5			132 M	Y	50	47.5	92.6	0.72	17.1	1FP1004-1CB2 ■-■■■■
	8.6			Y	60	45.5	92.4	0.73	16.7	
		13		Δ	87	47.5	92.0	0.72	30.0	
11			160 M	Y	50	70.0	93.3	0.73	24.5	1FP1004-1DB2 ■-■■■■
	12.6			Y	60	67.0	93.6	0.73	24.0	
		19		Δ	87	70.0	92.7	0.73	43.0	
15			160 L	Y	50	95.0	93.9	0.72	33.5	1FP1004-1DB4 ■-■■■■
	17.3			Y	60	92.0	94.5	0.73	33.0	
		26		Δ	87	95.0	93.3	0.72	59.0	
18.5			180 M [1]	Y	50	118.0	94.2	0.71	42.0	1FP1014-1EB2 ■-■■■■
	21.3			Y	60	113.0	94.2	0.72	41.0	
		32		Δ	87	118.0	94.5	0.71	73.0	
22			180 L [1]	Y	50	140.0	93.6	0.72	49.0	1FP1014-1EB4 ■-■■■■
	25.3			Y	60	134.0	94.5	0.73	48.0	
		38.1		Δ	87	140.0	94.5	0.72	48.0	
30			200 L [1]	Y	50	191.0	93.9	0.71	68.0	1FP1014-2AB5 ■-■■■■
	34.5			Y	60	183.0	95.4	0.72	66.0	
		52		Δ	87	191.0	94.4	0.71	118.0	
For versions, see Article No. supplements and special versions.										■-■■■■

All technical specifications refer to converter operation.

© Siemens AG 2018

Motor type	$m_{IM\ B3}$	J	L_{pfA}, tolerance +3 dB(A) load	L_{WA}, tolerance +3 dB(A) load	Mech. speed limit	Terminal box	**Converter SINAMICS G120 – PM240-2** Operating mode: Low overload	Frame size	IES class acc. to EN 50598-2
	kg	kgm^2	dB(A)	dB(A)	rpm	Type	Type [2]		
1FP1004-0DB2.-....	11	0.0019	69.0	81.0	3200	TB1E00	6SL3210-1PE11-8.L0	FSA	IES 2
							6SL3210-1PE11-8.L0	FSA	IES 2
							6SL3210-1PE13-2.L0	FSA	IES 2
1FP1004-0DB3.-....	14	0.0025	69.0	81.0	3200	TB1E00	6SL3210-1PE12-3.L0	FSA	IES 2
							6SL3210-1PE12-3.L0	FSA	IES 2
							6SL3210-1PE14-3.L0	FSA	IES 2
1FP1004-1BB2.-....	36	0.0108	64.0	76.0	3200	TB1F00	6SL3210-1PE21-1.L0	FSA	IES 2
							6SL3210-1PE21-1.L0	FSA	IES 2
							6SL3210-1PE21-8.L0	FSB	IES 2
1FP1004-1CB0.-....	51	0.0210	68.0	81.0	3200	TB1H00	6SL3210-1PE21-4.L0	FSB	IES 2
			72.0	86.0			6SL3210-1PE21-4.L0	FSB	IES 2
							6SL3210-1PE22-7.L0	FSC	IES 2
1FP1004-1CB2.-....	62	0.0255	64.0	77.0	3200	TB1H00	6SL3210-1PE21-8.L0	FSB	IES 2
			68.0	82.0			6SL3210-1PE21-8.L0	FSB	IES 2
							6SL3210-1PE23-3.L0	FSC	IES 2
1FP1004-1DB2.-....	72	0.0430	75.0	88.0	3000	TB1J00	6SL3210-1PE22-7.L0	FSC	IES 2
			79.0	93.0			6SL3210-1PE22-7.L0	FSC	IES 2
							6SL3210-1PE23-8.L0	FSD	IES 2
1FP1004-1DB4.-....	90	0.0564	77.0	90.0	3000	TB1J00	6SL3210-1PE23-3.L0	FSC	IES 2
			81.0	95.0			6SL3210-1PE23-8.L0	FSC	IES 2
							6SL3210-1PE26-0.L0	FSD	IES 2
1FP1014-1EB2.-....	132	0.1164	71.0	83.0	2610	TB1J00	6SL3210-1PE23-8.L0	FSD	IES 2
			73.0	85.0			6SL3210-1PE24-5.L0	FSD	IES 2
							6SL3210-1PE27-5.L0	FSE	IES 2
1FP1014-1EB4.-....	144	0.1325	71.0	83.0	2610	TB1J00	6SL3210-1PE24-5.L0	FSD	IES 2
			73.0	85.0			6SL3210-1PE26-0.L0	FSD	IES 2
							6SL3210-1PE28-8.L0	FSE	IES 2
1FP1014-2AB5.-....	171	0.1764	76.3	88.3	2610	TB1L00	6SL3210-1PE26-0.L0	FSE	IES 2
			77.7	89.7			6SL3210-1PE27-5.L0	FSD	IES 2
							6SL3210-1PE31-5.L0	FSF	IES 2

[1] For the motor type 1FP10 of the SIMOTICS GP series, frame sizes 180 and 200 on request.

[2] In addition to the Power Module, a CU230P-2 Control Unit and an Operator Panel are required (see Catalog D 31 and/or D 35).

© Siemens AG 2018

Self-ventilated, enclosed motors – line voltage 400 V, 50 Hz/460 V, 60 Hz/400 V, 87 Hz

Selection and ordering data

P_{rated} 50 Hz, 400 V	P_{rated} 60 Hz, 480 V	P_{rated} 87 Hz, 400 V	Frame size	Connection	Operating values at rated power f_{rated}	T_{rated}	$\eta_{rated, 4/4}$ for converter operation	$\cos\varphi_{rated, 4/4}$	I_{rated}	1FP15.4 cast-iron series Version specifically for converter operation Article No.
kW	kW	kW			Hz	Nm	%		A	▲ New
• Insulation: Thermal class 155 (temperature class F), IP55 degree of protection, utilization in accordance with thermal class F according to B										
• Operation with a SINAMICS G120 converter with uncontrolled infeed – rated voltage 380 V, 50 Hz/440 V, 60 Hz/380 V, 87 Hz										
3000 rpm	3600 rpm		4-pole							
22			180 M	Y	100	70	94.0	0.71	50	▲ 1FP1514-1EF2 ■-■■■■
	25.3			Y	120	67	93.0	0.71	50	
30			200 L	Y	100	96	94.5	0.72	67	▲ 1FP1514-2AF4 ■-■■■■
	34.5			Y	120	91	94.1	0.72	67	
37			200 L	Y	100	118	94.8	0.72	82	▲ 1FP1514-2AF5 ■-■■■■
	42.5			Y	120	112	94.5	0.73	81	
1500 rpm	1800 rpm	2610 rpm	4-pole							
0.55			80 M	Y	50	3.5	83.9	0.63	1.6	1FP1504-0DB2 ■-■■■■
	0.63			Y	60	3.4	84.0	0.62	1.6	
		0.95		Δ	87	3.5	87.4	0.62	2.7	
0.75			80 M	Y	50	4.8	85.7	0.62	2.2	1FP1504-0DB3 ■-■■■■
	0.86			Y	60	4.6	85.5	0.62	2.2	
		1.3		Δ	87	4.8	88.8	0.62	3.6	
4			112 M	Y	50	25.5	91.1	0.67	10.0	1FP1504-1BB2 ■-■■■■
	4.55			Y	60	24.0	91.0	0.68	9.6	
		6.9		Δ	87	25.5	92.0	0.67	17.0	
5.5			132 S	Y	50	35.0	91.9	0.70	13.0	1FP1504-1CB0 ■-■■■■
	6.3			Y	60	33.5	92.4	0.70	12.8	
		9.5		Δ	87	35.0	91.3	0.70	22.5	
7.5			132 M	Y	50	47.5	92.6	0.72	17.1	1FP1504-1CB2 ■-■■■■
	8.6			Y	60	45.5	92.4	0.73	16.7	
		13		Δ	87	47.5	92.0	0.72	30.0	
11			160 M	Y	50	70.0	93.3	0.73	24.5	1FP1504-1DB2 ■-■■■■
	12.6			Y	60	67.0	93.6	0.73	24.0	
		19		Δ	87	70.0	92.7	0.73	43.0	
15			160 L	Y	50	95.0	93.9	0.72	33.5	1FP1504-1DB4 ■-■■■■
	17.3			Y	60	92.0	94.5	0.73	33.0	
		26		Δ	87	95.0	93.3	0.72	59.0	
18.5			180 M	Y	50	118.0	94.2	0.71	42.0	1FP1514-1EB2 ■-■■■■
	21.3			Y	60	113.0	94.5	0.72	41.0	
		32		Δ	87	118.0	93.6	0.71	73.0	
22			180 L	Y	50	140.0	94.5	0.72	49.0	1FP1514-1EB4 ■-■■■■
	25.3			Y	60	134.0	94.5	0.73	48.0	
		38.1		Δ	87	140.0	93.9	0.72	86.0	
30			200 L	Y	50	191.0	94.9	0.71	68.0	1FP1514-2AB5 ■-■■■■
	34.5			Y	60	183.0	95.4	0.72	66.0	
		52		Δ	87	191.0	94.4	0.71	118.0	

For versions, see Article No. supplements and special versions. ■-■■■■

All technical specifications refer to converter operation.

© Siemens AG 2018

Motor type	$m_{IM\ B3}$	J	L_{pfA}, tolerance +3 dB(A) load	L_{WA}, tolerance +3 dB(A) load	Mech. speed limit	Terminal box	**Converter SINAMICS G120 – PM240-2** Operating mode: Low overload	Frame size	IES class acc. to EN 50598-2
	kg	kgm^2	dB(A)	dB(A)	rpm	Type	Type [1]		
1FP1514-1EF2.-....	144	0.0873	73.0	86.0	4600	TB1J00	6SL3210-1PE24-5.L0	FSD	IES 2
			75	88			6SL3210-1PE24-5.L0	FSD	IES 2
1FP1514-2AF4.-....	187	0.1277	73.0	86.0	4500	TB1L01	6SL3210-1PE26-0.L0	FSD	IES 2
			76	89			6SL3210-1PE26-0.L0	FSD	IES 2
1FP1514-2AF5.-....	222	0.1884	73.0	86.0	4500	TB1L01	6SL3210-1PE28-8.L0	FSE	IES 2
			76	89			6SL3210-1PE28-8.L0	FSE	IES 2
1FP1504-0DB2.-....	19	0.0019	69.0	81.0	3200	TB1D01	6SL3210-1PE11-8.L0	FSA	IES 2
							6SL3210-1PE11-8.L0	FSA	IES 2
							6SL3210-1PE13-2.L0	FSA	IES 2
1FP1504-0DB3.-....	23	0.0025	69.0	81.0	3200	TB1D01	6SL3210-1PE12-3.L0	FSA	IES 2
							6SL3210-1PE12-3.L0	FSA	IES 2
							6SL3210-1PE14-3.L0	FSA	IES 2
1FP1504-1BB2.-....	46	0.0108	64.0	76.0	3200	TB1F01	6SL3210-1PE21-1.L0	FSA	IES 2
							6SL3210-1PE21-1.L0	FSA	IES 2
							6SL3210-1PE21-8.L0	FSB	IES 2
1FP1504-1CB0.-....	68	0.0210	68.0	81.0	3200	TB1H01	6SL3210-1PE21-4.L0	FSB	IES 2
			72.0	86.0			6SL3210-1PE21-4.L0	FSB	IES 2
							6SL3210-1PE22-7.L0	FSC	IES 2
1FP1504-1CB2.-....	80	0.0255	64.0	77.0	3200	TB1H01	6SL3210-1PE21-8.L0	FSB	IES 2
			68.0	82.0			6SL3210-1PE21-8.L0	FSB	IES 2
							6SL3210-1PE23-3.L0	FSC	IES 2
1FP1504-1DB2.-....	100	0.0430	75.0	88.0	3200	TB1J01	6SL3210-1PE22-7.L0	FSC	IES 2
			79.0	93.0			6SL3210-1PE22-7.L0	FSC	IES 2
							6SL3210-1PE23-8.L0	FSD	IES 2
1FP1504-1DB4.-....	122	0.0564	77.0	90.0	3200	TB1J01	6SL3210-1PE23-3.L0	FSC	IES 2
			81.0	95.0			6SL3210-1PE23-8.L0	FSC	IES 2
							6SL3210-1PE26-0.L0	FSD	IES 2
1FP1514-1EB2.-....	166	0.1155	69.0	82.0	3000	TB1J01	6SL3210-1PE23-8.L0	FSD	IES 2
			70.0	83.0			6SL3210-1PE24-5.L0	FSD	IES 2
			76.0	89.0			6SL3210-1PE27-5.L0	FSE	IES 2
1FP1514-1EB4.-....	182	0.1315	69.0	82.0	3000	TB1J01	6SL3210-1PE24-5.L0	FSD	IES 2
			70.0	83.0			6SL3210-1PE26-0.L0	FSD	IES 2
			76.0	89.0			6SL3210-1PE28-8.L0	FSE	IES 2
1FP1514-2AB5.-....	220	0.1884	68.0	81.0	3000	TB1L01	6SL3210-1PE26-0.L0	FSE	IES 2
			70.0	83.0			6SL3210-1PE27-5.L0	FSD	IES 2
			73.0	86.0			6SL3210-1PE31-5.L0	FSF	IES 2

[1] In addition to the Power Module, a CU230P-2 Control Unit and an Operator Panel are required (see Catalog D 31 and/or D 35).

© Siemens AG 2018

Voltages – 1FP10.4 aluminum series

Selection and ordering data

Voltages	Article No. supplement		Frame size						Motor version
	Voltage code 12th and 13th position of the Article No.	Additional identification code with order code and plain text if required	80	112	132	160	180	200	
			1FP10.4						Super Premium Efficiency
1FP10.4- . . . . ■ - ■ . . .		Order code							
Voltage at 50 Hz or 60 Hz									
Line voltage: 50 Hz, 400 V 60 Hz, 480 V	**2 1**	**–**	□	□	□	□	□	□	

□ Standard version

© Siemens AG 2018

Selection and ordering data

Voltages	Article No. supplement		Frame size						Motor version
	Voltage code 12th and 13th position of the Article No.	Additional identification code with order code and plain text if required	**80**	**112**	**132**	**160**	**180**	**200**	
			1FP15.4						Super Premium Efficiency
1FP15.4- . . . . ■ - ■ . . .		Order code							
Voltage at 50 Hz or 60 Hz									
Line voltage: 50 Hz, 400 V 60 Hz, 480 V	**2 1**	**–**	□	□	□	□	□	□	

□ Standard version

© Siemens AG 2018

Types of construction – 1FP10.4 aluminum series

Selection and ordering data

Types of construction		Article No. supplement		Frame size						Motor version
		Type of construction code letter 14th position of the Article No.	For types of construction with order code(s) Article No. with additional identification code **-Z**	**80**	**112**	**132**	**160**	**180**	**200**	
				1FP10.4						Super Premium Efficiency
1FP10.4- . . . . . - . ■ . . (-Z)			Order code							
Without flange										
IM B3 [1) 2)]		**A**	–	□	□	□	□	□	□	
IM B6 [2)]	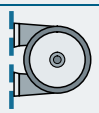	**T**	–	□	□	□	□	□	□	
IM B7 [2)]	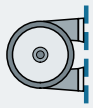	**U**	–	□	□	□	□	□	□	
IM B8 [2)]		**V**	–	□	□	□	□	□	□	
IM V6 [2)]		**D**	–	□	□	□	□	□	□	
IM V5 without protective cover [2)]		**C**	–	□	□	□	□	□	□	
IM V5 with protective cover [2) 3) 4)]	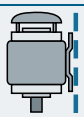	**C**	**H00**	✓	✓	✓	✓	✓	✓	
With flange		**Acc. to EN 50347 Acc. to DIN 42948**		**FF165 A 200**	**FF215 A 250**	**FF265 A 300**	**FF300 A 350**	**FF300 A 350**	**FF350 A 400**	
IM B5 [2) 5)]	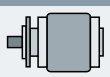	**F**	–	✓	✓	✓	✓	✓	✓	
IM V1 without protective cover [2)]	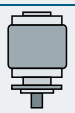	**G**	–	✓	✓	✓	✓	✓	✓	
IM V1 with protective cover [2) 4)]	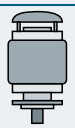	**G**	**H00**	✓	✓	✓	✓	✓	✓	
IM V3 [3)]		**H**	–	✓	✓	✓	✓	✓	✓	
IM B35	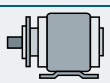	**J**	–	✓	✓	✓	✓	✓	✓	

For legends and footnotes, see page 4/34.

© Siemens AG 2018

Types of construction		Article No. supplement		Frame size						Motor version
		Type of construction code letter 14th position of the Article No.	For types of construction with order code(s) Article No. with additional identification code **-Z**	**80**	**112**	**132**	**160**	**180**	**200**	
				1FP10.4						Super Premium Efficiency
1FP10.4- . . . . . - . ■ . . (-Z)			Order code							
With flange		**Acc. to EN 50347**		**FT100**	**FT130**	**FT165**	**FT215**	**–**	**–**	
		Acc. to DIN 42948		**C 120**	**C 160**	**C 200**	**C 250**	**–**	**–**	
IM B14 [2) 6)]	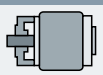	**K**	**–**	✓	✓	✓	✓	–	–	
IM V19 [2)]	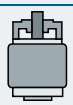	**L**	**–**	✓	✓	✓	✓	–	–	
IM V18 without protective cover [2)]	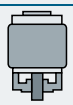	**M**	**–**	✓	✓	✓	✓	–	–	
IM V18 with protective cover [2) 3) 4)]	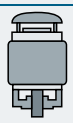	**M**	**H00**	✓	✓	✓	✓	–	–	
IM B34		**N**	**–**	✓	✓	✓	✓	–	–	
With special flange next largest		**Acc. to EN 50347**		**FT130**	**FT165**	**FT215**	**–**	**–**	**–**	
		Acc. to DIN 42948		**C 160**	**C 200**	**C 250**	**–**	**–**	**–**	
IM B14 [2) 6)]		**K**	**P01**	✓	✓	✓	–	–	–	
IM V19 [2)]	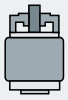	**L**	**P01**	✓	✓	✓	–	–	–	
IM V18 without protective cover [2)]	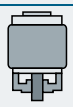	**M**	**P01**	✓	✓	✓	–	–	–	
IM V18 with protective cover [2) 4) 5)]	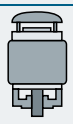	**M**	**P01+H00**	✓	✓	✓	–	–	–	
IM B34 [3)]		**N**	**P01**	–	–	✓	–	–	–	

For legends and footnotes, see page 4/34.

© Siemens AG 2018

SIMOTICS GP VSD4000 line reluctance motors for SINAMICS converters

Article No. supplements and special versions

Types of construction – 1FP10.4 aluminum series

Types of construction		Article No. supplement		Frame size						Motor version
		Type of construction code letter 14th position of the Article No.	For types of construction with order code(s) Article No. with additional identification code **-Z**	**80**	**112**	**132**	**160**	**180**	**200**	
				1FP10.4						Super Premium Efficiency
1FP10.4- . . . . . - . ■ . . (-Z)			Order code							
With special flange next smallest		**Acc. to EN 50347**		–	FT130	FT130	FT165	–	–	
		Acc. to DIN 42948		–	C 160	C 160	C 200	–	–	
IM B14 [2) 7)]	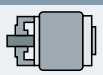	**K**	**P02**	–	O. R.	O. R.	O. R.	–	–	
IM V19 [2)]	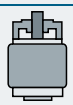	**L**	**P02**	–	O. R.	O. R.	O. R.	–	–	
IM V18 without protective cover [2)]	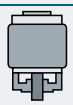	**M**	**P02**	–	O. R.	O. R.	O. R.	–	–	
IM V18 with protective cover [2) 3) 4) 5)]	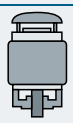	**M**	**P02+H00**	–	O. R.	O. R.	O. R.	–	–	
IM B34		**N**	**P02**	–	O. R.	O. R.	O. R.	–	–	

4

□ Standard version
✓ With additional charge
O. R. Possible on request
– Not possible

[1)] The types of construction IM B6/7/8, IM V6, and IM V5 with/without protective cover are also possible as long as no condensation drainage holes (order code **H03**) and no stamping of these types of construction on the rating plate are required. As standard the type of construction IM B3 is then stamped on the rating plate. With type of construction IM V5 with protective cover, the protective cover has to be additionally ordered with order code **H00**. The protective cover is not stamped on the rating plate.

[2)] The type of construction is stamped on the rating plate. For orders with condensation drainage holes (order code **H03**), if mounted in a different position, the position must be specified to ensure that the condensation drainage holes are positioned correctly.

[3)] The "Second shaft extension" option (order code **L05**) is not possible.

[4)] In combination with an encoder, it is not necessary to order the protective cover (order code **H00**), as this is delivered as a protection for the encoder as standard. In this case the protective cover is standard version (without additional charge).

[5)] The types of construction IM V3 and IM V1 with/without protective cover are also possible as long as no condensation drainage holes (order code **H03**) and no stamping of these types of construction on the rating plate are required. As standard the type of construction IM B5 is then stamped on the rating plate. With type of construction IM V1 with protective cover, the protective cover has to be additionally ordered with order code **H00**. The protective cover is not stamped on the rating plate.

[6)] The types of construction IM V19 and IM V18 with/without protective cover are also possible as long as no condensation drainage holes (order code **H03**) and no stamping of these types of construction on the rating plate are required. As standard the type of construction IM B14 is then stamped on the rating plate. With type of construction IM V18 with protective cover, the protective cover has to be additionally ordered with order code **H00**. The protective cover is not stamped on the rating plate.

© Siemens AG 2018

Selection and ordering data

Types of construction		Article No. supplement		Frame size						Motor version
		Type of construction code letter 14th position of the Article No.	For types of construction with order code(s) Article No. with additional identification code **-Z**	**80**	**112**	**132**	**160**	**180**	**200**	
				1FP15.4						Super Premium Efficiency
1FP15.4- . . . . . - . ■ **. . (-Z)**			Order code							
Without flange										
IM B3 [1) 2)]		**A**	**–**	□	□	□	□	□	□	
IM B6 [2)]	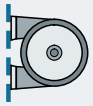	**T**	**–**	□	□	□	□	□	□	
IM B7 [2)]	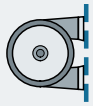	**U**	**–**	□	□	□	□	□	□	
IM B8 [2)]		**V**	**–**	□	□	□	□	□	□	
IM V6 [2)]	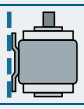	**D**	**–**	□	□	□	□	□	□	
IM V5 without protective cover [2)]		**C**	**–**	□	□	□	□	□	□	
IM V5 with protective cover [2) 3) 4)]	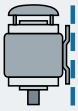	**C**	**H00**	✓	✓	✓	✓	✓	✓	
With flange		**Acc. to EN 50347** **Acc. to DIN 42948**		**FF165** **A 200**	**FF215** **A 250**	**FF265** **A 300**	**FF300** **A 350**	**FF300** **A 350**	**FF350** **A 400**	
IM B5 [2) 6)]	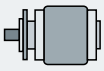	**F**	**–**	✓	✓	✓	✓	✓	✓	
IM V1 without protective cover [2)]		**G**	**–**	✓	✓	✓	✓	✓	✓	
IM V1 with protective cover [2) 3) 4)]		**G**	**H00**	✓	✓	✓	✓	✓	✓	
IM V3 [4)]		**H**	**–**	✓	✓	✓	✓	✓	✓	
IM B35	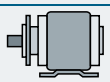	**J**	**–**	✓	✓	✓	✓	✓	✓	

For legends and footnotes, see page 4/36.

© Siemens AG 2018

SIMOTICS SD VSD4000 line reluctance motors for SINAMICS converters

Article No. supplements and special versions

Types of construction – 1FP15.4 cast-iron series

Types of construction		Article No. supplement		Frame size						Motor version
		Type of construction code letter 14th position of the Article No.	For types of construction with order code(s) Article No. with additional identification code **-Z**	**80**	**112**	**132**	**160**	**180**	**200**	
				1FP15.4						Super Premium Efficiency
1FP15.4- . . . . . - . ■ . . (-Z)			Order code							
With flange		**Acc. to EN 50347**		**FT100**	**FT130**	**FT165**	**FT215**	**–**	**–**	
		Acc. to DIN 42948		**C 120**	**C 160**	**C 200**	**C 250**	**–**	**–**	
IM B14 [2) 6)]	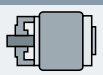	**K**	**–**	✓	✓	✓	✓	–	–	
IM V19 [2)]	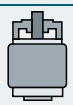	**L**	**–**	✓	✓	✓	✓	–	–	
IM V18 without protective cover [2)]	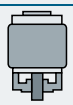	**M**	**–**	✓	✓	✓	✓	–	–	
IM V18 with protective cover [2) 3) 4)]	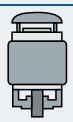	**M**	**H00**	✓	✓	✓	✓	–	–	
IM B34	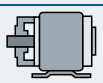	**N**	**–**	✓	✓	✓	✓	–	–	
With special flange next largest		**Acc. to EN 50347**		**–**	**–**	**FT215**	**–**	**–**	**–**	
		Acc. to DIN 42948		**–**	**–**	**C 250**	**–**	**–**	**–**	
IM B14 [2) 6)]	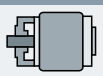	**K**	**P01**	–	–	✓	–	–	–	
IM V19 [2)]	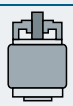	**L**	**P01**	–	–	✓	–	–	–	
IM V18 without protective cover [2)]	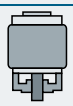	**M**	**P01**	–	–	✓	–	–	–	
IM V18 with protective cover [2) 3) 4)]	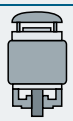	**M**	**P01+H00**	–	–	✓	–	–	–	
IM B34	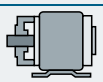	**N**	**P01**	–	–	✓	–	–	–	

□ Standard version
✓ With additional charge
– Not possible

1) The types of construction IM B6/7/8, IM V6 and IM V5 with/without protective cover are also possible as long as no stamping of these types of construction on the rating plate is required. As standard the type of construction IM B3 is then stamped on the rating plate. With type of construction IM V5 with protective cover, the protective cover has to be additionally ordered with order code **H00**. The protective cover is not stamped on the rating plate.

2) The type of construction is stamped on the rating plate. If mounted in a different position, the position must be specified to ensure that the condensation drainage holes are positioned correctly.

3) In combination with an encoder, it is not necessary to order the protective cover (order code **H00**), as this is delivered as a protection for the encoder as standard. In this case the protective cover is standard design (without additional charge).

4) The "Second shaft extension" option (order code **L05**) is not possible.

5) The types of construction IM V3 and IM V1 with/without protective cover are also possible as long as no stamping of these types of construction on the rating plate is required. As standard the type of construction IM B5 is then stamped on the rating plate. With type of construction IM V1 with protective cover, the protective cover has to be additionally ordered with order code **H00**. The protective cover is not stamped on the rating plate.

6) The types of construction IM V19 and IM V18 with/without protective cover are also possible as long as no stamping of these types of construction on the rating plate is required. As standard the type of construction IM B14 is then stamped on the rating plate. With type of construction IM V18 with protective cover, the protective cover has to be additionally ordered with order code **H00**. The protective cover is not stamped on the rating plate.

© Siemens AG 2018

Selection and ordering data

Motor protection	Article No. supplement		Frame size						Motor version
	Motor protection code letter 15th position of the Article No.	Additional identification code with order code and plain text if required	80	112	132	160	180	200	
			1FP10.4						Super Premium Efficiency
1FP10.4- . . . . . - . . ■ .		Order code							
Motor protection									
1 or 3 PTC thermistors – for tripping (2 terminals) [1]	**B**		**–**	✓	✓	✓	✓	✓	✓	
2 or 6 PTC thermistors – for alarm and tripping (4 terminals) [1]	**C**		**–**	✓	✓	✓	✓	✓	✓	
1 KTY84-130 temperature sensor (2 terminals) [1]	**F**		**–**	□	□	□	□	□	□	
2 KTY84-130 temperature sensors (4 terminals) [1]	**G**		**–**	✓	✓	✓	✓	✓	✓	
3 Pt100 resistance thermometers 2-wire input (6 terminals) [1]	**H**	*New!*	**–**	–	✓	✓	✓	✓	✓	
1 Pt1000 resistance thermometer (2 terminals) [2]	**K**		**–**	✓	✓	✓	✓	✓	✓	
2 Pt1000 resistance thermometers (4 terminals) [2]	**L**		**–**	✓	✓	✓	✓	✓	✓	
1 Pt100 resistance thermometer 2-wire input (2 terminals)	**P**	*New!*	**–**	–	–	✓	✓	✓	✓	
3 Pt100 resistance thermometers 3-wire input (9 terminals)	**Q**	*New!*	**–**	–	–	✓	✓	✓	✓	
6 Pt100 resistance thermometers 3-wire input (18 terminals) [1]	**R**	*New!*	**–**	–	–	✓	✓	✓	✓	
3 bimetal sensors (NC contacts) for tripping (2 terminals) [1]	**Z**		**Q3A**	✓	✓	✓	✓	✓	✓	

□ Standard version
✓ With additional charge

[1] Evaluation with associated tripping unit (see Catalog IC 10) is recommended.

[2] Not UL-certified. Not in combination with option **D39**.

© Siemens AG 2018

Motor protection – 1FP15.4 cast-iron series

Selection and ordering data

Motor protection	Article No. supplement		Frame size						Motor version
	Motor protection code letter 15th position of the Article No.	Additional identification code with order code and plain text if required	80	112	132	160	180	200	
			1FP15.4						Super Premium Efficiency
1FP15.4- . . . . . - . . ■ **.**		Order code							
Motor protection									
1 or 3 PTC thermistors – for tripping (2 terminals) [1]	**B**	**–**	✓	✓	✓	✓	✓	✓	
2 or 6 PTC thermistors – for alarm and tripping (4 terminals) [1]	**C**	**–**	✓	✓	✓	✓	✓	✓	
1 KTY84-130 temperature sensor (2 terminals) [1]	**F**	**–**	□	□	□	□	□	□	
2 KTY84-130 temperature sensors (4 terminals) [1]	**G**	**–**	✓	✓	✓	✓	✓	✓	
1 Pt1000 resistance thermometer (2 terminals) [2]	**K**	**–**	✓	✓	✓	✓	✓	✓	
2 Pt1000 resistance thermometers (4 terminals) [2]	**L**	**–**	✓	✓	✓	✓	✓	✓	
1 Pt100 resistance thermometer – 2-wire input (2 terminals)	**P**	**–**	–	✓	✓	✓	✓	✓	
3 Pt100 resistance thermometers – 3-wire input (9 terminals)	**Q**	**–**	–	✓	✓	✓	✓	✓	
6 Pt100 resistance thermometers – 3-wire input (18 terminals)	**R**	**–**	–	✓	✓	✓	✓	✓	
3 bimetal sensors (NC contacts) for tripping (2 terminals) [1]	**Z**	**Q3A**	✓	✓	✓	✓	✓	✓	
6 × bimetal sensors (NC contacts) for alarm and tripping (4 terminals) [1]	**Z**	**Q9A**	–	✓	✓	✓	✓	✓	

□ Standard version
✓ With additional charge
– Not possible

[1] Evaluation with associated tripping unit (see Catalog IC 10) is recommended.

[2] Not UL-certified. Not in combination with option **D39**.

© Siemens AG 2018

Selection and ordering data

Terminal box position	Article No. supplement			Frame size						Motor version
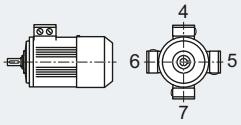	Terminal box position code 16th position of the Article No.		Additional identification code with order code and plain text if required	**80**	**112**	**132**	**160**	**180**	**200**	
				1FP10.4						Super Premium Efficiency
1FP10.4- . . . . . - . . . ■			Order code							
Terminal box position										
Terminal box top [1]	**4**		–	□	□	□	□	□	□	
Terminal box right-hand side [2]	**5**		–	✓	✓	✓	✓	✓	✓	
Terminal box left-hand side [2]	**6**		–	✓	✓	✓	✓	✓	✓	
Terminal box bottom [2]	**7**	*New!*	–	–	✓	✓	✓	–	–	

□ Standard version
✓ With additional charge

[1] For types of construction with feet, cast feet are standard. Screwed-on feet are available with order code **H01**.

[2] For foot-mounted designs, screwed-on feet are standard.

© Siemens AG 2018

Terminal box position – 1FP15.4 cast-iron series

Selection and ordering data

Terminal box position	Article No. supplement			Frame size						Motor version
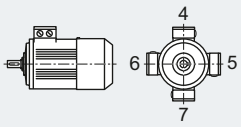	Terminal box position code 16th position of the Article No.		Additional identification code with order code and plain text if required	**80**	**112**	**132**	**160**	**180**	**200**	
				1FP15.4						Super Premium Efficiency
1FP15.4-. . . . . - . . . ■			Order code							
Terminal box position										
Terminal box top [1]	**4**		–	□	□	□	□	□	□	
Terminal box right-hand side [2]	**5**		–	✓	✓	✓	✓	✓	✓	
Terminal box left-hand side [2]	**6**		–	✓	✓	✓	✓	✓	✓	
Terminal box bottom [2]	**7**	*New!*	–	–	✓	✓	✓	–	–	

□ Standard version
✓ With additional charge

[1] For types of construction with feet, cast feet are standard. Screwed-on feet are available with order code **H01**.

[2] For foot-mounted designs, screwed-on feet are standard.

© Siemens AG 2018

Selection and ordering data

Special versions	Additional identification code **-Z** with order code and plain text if required		Frame size 80	112	132	160	180	200	Motor version
			1FP10.4						Super Premium Efficiency
1FP10.4- . . . . . - . . . . -Z	Order code								
Motor protection									
1 or 3 PTC thermistors – for tripping (2 terminals) [2) 3)]	**Q11**		✓	✓	✓	✓	✓	✓	
2 or 6 PTC thermistors – for alarm and tripping (4 terminals) [3)]	**Q12**		✓	✓	✓	✓	✓	✓	
1 KTY84-130 temperature sensor (2 terminals) [3)]	**Q23**		✓	✓	✓	✓	✓	✓	
2 KTY84-130 temperature sensor (4 terminals) [3)]	**Q25**		✓	✓	✓	✓	✓	✓	
3 bimetal sensors (NC contacts) for tripping (2 terminals) [3)]	**Q31**		✓	✓	✓	✓	✓	✓	
6 bimetal sensors (NC contacts) for alarm and tripping (4 terminals)	**Q32**		✓	✓	✓	✓	✓	✓	
3 bimetal sensors (NC contacts) for tripping (6 terminals)	**Q33**		–	–	–	–	✓	✓	
6 bimetal sensors (NC contacts) for alarm and tripping (12 terminals)	**Q34**		–	–	–	–	✓	✓	
1 Pt1000 resistance thermometer (2 terminals) [19)]	**Q35**		✓	✓	✓	✓	✓	✓	
2 Pt1000 resistance thermometers (4 terminals) [19)]	**Q36**		✓	✓	✓	✓	✓	✓	
3 Pt100 resistance thermometers – 2-wire input (6 terminals)	**Q60**	*New!*	–	✓	✓	✓	✓	✓	
6 Pt100 resistance thermometers – 2-wire input (12 terminals)	**Q61**	*New!*	–	✓	✓	✓	✓	✓	
1 Pt100 resistance thermometer – 2-wire input (2 terminals)	**Q62**	*New!*	–	✓	✓	✓	✓	✓	
3 Pt100 resistance thermometers – 3-wire input (9 terminals)	**Q63**	*New!*	–	✓	✓	✓	✓	✓	
6 Pt100 resistance thermometers – 3-wire input (18 terminals)	**Q64**	*New!*	–	✓	✓	✓	✓	–	
2 Pt100 screw-in thermometers in basic configuration for bearings (2 terminals)	**Q72**	*New!*	–	O. R.	O. R.	O. R.	✓	✓	
2 Pt100 screw-in thermometers in 3-wire input for bearing (6 terminals)	**Q78**	*New!*	–	O. R.	O. R.	O. R.	✓	✓	
2 Pt100 double screw-in thermometers in 3-wire input for bearing (12 terminals)	**Q79**	*New!*	–	O. R.	O. R.	O. R.	✓	✓	
Motor connection and terminal box									
External grounding	**H04**		✓	✓	✓	✓	✓	✓	
Terminal box on NDE [1)]	**H08**		✓	✓	✓	✓	✓	✓	
Rotation of the terminal box through 90°, entry from DE [2)]	**R10**		○	○	○	○	✓	✓	
Rotation of the terminal box through 90°, entry from NDE	**R11**		○	○	○	○	✓	✓	
Rotation of the terminal box through 180°	**R12**		○	○	○	○	✓	✓	
Terminal box in position 0°, connection from right [20)]	**R13**	*New!*	✓	✓	✓	–	–	–	
One metal cable gland	**R15**		✓	✓	✓	✓	✓	✓	
Metal cable gland, maximum configuration	**R18**		–	–	–	–	✓	✓	
3 cables protruding, 0.5 m long	**R20**		✓	✓	✓	✓	O. R.	O. R.	
3 cables protruding, 1.5 m long	**R21**		✓	✓	✓	✓	O. R.	O. R.	
6 cables protruding, 0.5 m long	**R22**		✓	✓	O. R.	O. R.	O. R.	O. R.	
6 cables protruding, 1.5 m long	**R23**		✓	✓	✓	✓	O. R.	O. R.	
6 cables protruding, 3 m long	**R24**		✓	✓	✓	✓	O. R.	O. R.	
Larger terminal box	**R50**		✓	✓	✓	✓	✓	✓	
Motor connector Han-Drive 10e for 230 VΔ/400 VY	**R70**		✓	✓	✓	–	–	–	
Motor connector EMC Han-Drive 10e for 230 VΔ/400 VY	**R71**		✓	✓	✓	–	–	–	

For legends and footnotes, see page 4/44.

© Siemens AG 2018

Options – 1FP10.4 aluminum series

Special versions	Additional identification code **-Z** with order code and plain text if required	Frame size 80	112	132	160	180	200	Motor version
		1FP10.4						Super Premium Efficiency
1FP10.4- . . . . . - . . . . -Z	Order code							
Windings and insulation								
Temperature class 180 (H) at rated power and max. CT 60 °C [3]	**N11**	✓	✓	✓	✓	✓	✓	
Increased air humidity/temperature with 30 to 60 g water per m^3 of air	**N30**	✓	✓	✓	✓	✓	✓	
Increased air humidity/temperature with 60 to 100 g water per m^3 of air	**N31**	✓	✓	✓	✓	✓	✓	
Colors and paint finish								
Standard paint finish C2 in RAL 7030 stone gray		□	□	□	□	□	□	
Unpainted (only cast-iron parts primed)	**S00**	○	○	○	○	○	○	
Unpainted, only primed	**S01**	✓	✓	✓	✓	✓	✓	
Special paint finish C3	**S02**	✓	✓	✓	✓	✓	✓	
Special paint finish sea air resistant C4	**S03**	✓	✓	✓	✓	✓	✓	
Internal coating	**S05**	✓	✓	✓	✓	✓	✓	
Paint finish in special RAL colors: For RAL colors, see "Special paint finish in special RAL colors" (see Catalog Section 1 "Introduction")	**Y56** • and paint finish RAL....	✓	✓	✓	✓	✓	✓	
Modular technology – Basic versions [4]								
Mounting of holding brake (standard assignment) [5]	**F01**	✓	✓	✓	✓	✓	✓	
Mounting of brake for higher switching frequency (operating brake)	**F02**	O. R.	O. R.	O. R.	O. R.	O. R.	O. R.	
Mounted separately driven fan	**F70**	–	–	✓	✓	✓	✓	
Mounting of 1XP8012-10 (HTL) rotary pulse encoder [6] [7]	**G01**	✓	✓	✓	✓	✓	✓	
Mounting of 1XP8012-20 (TTL) rotary pulse encoder [6] [7]	**G02**	✓	✓	✓	✓	✓	✓	
Modular technology – Additional versions								
Brake supply voltage 24 V DC	**F10**	✓	✓	✓	✓	✓	✓	
Brake supply voltage 230 V AC, 50/60 Hz	**F11**	✓	○	○	○	○	○	
Brake supply voltage 400 V AC, 50/60 Hz	**F12**	✓	✓	✓	✓	✓	✓	
Mechanical manual brake release with lever (no locking)	**F50**	✓	✓	✓	✓	✓	✓	
Special technology [3]								
Mounting of LL 861 900 220 rotary pulse encoder [6]	**G04**	–	✓	✓	✓	✓	✓	
Mounting of HOG 9 DN 1024 I rotary pulse encoder [6]	**G05**	–	✓	✓	✓	✓	✓	
Mounting of HOG 10 D 1024 I rotary pulse encoder [6]	**G06**	–	✓	✓	✓	✓	✓	
Mechanical version and degrees of protection								
Prepared for mountings, centering hole only [7]	**G40**	✓	✓	✓	✓	□	□	
Prepared for mountings with D12 shaft [12]	**G41**	✓	✓	✓	✓	✓	✓	
Prepared for mountings with D16 shaft [12]	**G42**	✓	✓	✓	✓	✓	✓	
Mechanical protection for encoder	**G43**	✓	✓	✓	✓	✓	✓	
Protective cover [6] [8]	**H00**	✓	✓	✓	✓	✓	✓	
Screwed-on (instead of cast) feet	**H01**	✓	✓	✓	✓	□	□	
Vibration-proof version; vibration resistance to Class 3M4 according to IEC 60721-3-3:1994	**H02**	✓	✓	✓	✓	✓	✓	
Condensation drainage holes [9]	**H03**	✓	✓	✓	✓	✓	✓	
Rust-resistant screws (externally)	**H07**	✓	✓	✓	✓	✓	✓	
Housing with screw mounting	**H10**	✓	–	–	–	✓	✓	
IP65 degree of protection [10]	**H20**	✓	✓	✓	✓	✓	✓	
IP56 degree of protection [11]	**H22**	✓	✓	✓	✓	✓	✓	
Drive-end seal for flange-mounted motors, oil-tight to 0.1 bar [8]	**H23**	✓	✓	✓	✓	✓	✓	
Coolant temperature and installation altitude								
Coolant temperature –40 to +40 °C [13]	**D03**	✓	✓	✓	✓	✓	✓	
Coolant temperature –30 to +40 °C [13]	**D04**	✓	✓	✓	✓	✓	✓	

For legends and footnotes, see page 4/44.

© Siemens AG 2018

Special versions	Additional identification code **-Z** with order code and plain text if required	Frame size 80	112	132	160	180	200	Motor version
		1FP10.4						Super Premium Efficiency
1FP10.4- . . . . . - . . . . -Z	Order code							
Versions in accordance with standards and specifications								
Version according to UL and CSA (Canadian regulation)	**D39**	✓	✓	✓	✓	✓	✓	
Bearings and lubrication								
Located bearing DE	**L20**	✓	✓	✓	✓	✓	✓	
Located bearing NDE	**L21**	✓	✓	✓	□	□	□	
Bearing design for increased cantilever forces	**L22**	✓	✓	✓	✓	✓	✓	
Regreasing device [14]	**L23**	–	✓	✓	✓	✓	✓	
Bearings reinforced at both ends for DE and NDE, bearing size 63	**L25**	✓	✓	✓	✓	✓	✓	
Measuring nipple for SPM shock pulse measurement for bearing inspection [14]	**Q01**	–	✓	✓	✓	✓	✓	
Balance and vibration severity								
Half-key balancing (standard)		□	□	□	□	□	□	
Balancing without feather key	**L01**	✓	✓	✓	✓	✓	✓	
Full-key balancing	**L02**	✓	✓	✓	✓	✓	✓	
Shaft and rotor								
Shaft extension with standard dimensions, without feather keyway	**L04**	–	✓	✓	✓	✓	✓	
Standard, cylindrical shaft extension (second shaft extension) NDE acc. to EN 50347	**L05**	✓	✓	✓	✓	✓	✓	
Standard shaft made of stainless steel (e.g. 1.4021)	**L06**	✓	–	✓	✓	✓	✓	
Concentricity of shaft extension in accordance with DIN 42955 Tolerance R	**L07**	✓	✓	✓	✓	✓	✓	
Concentricity of shaft extension, coaxiality and linear movement in accordance with DIN 42955 Tolerance R for flange-mounted motors	**L08**	✓	✓	✓	✓	✓	✓	
Non-standard cylindrical shaft extension, DE [15]	**Y58** • and customer specifications	✓	✓	✓	✓	✓	✓	
Non-standard cylindrical shaft extension, NDE [15]	**Y59** • and customer specifications	✓	✓	✓	✓	✓	✓	
Heating and ventilation								
Sheet metal fan cover	**F74**	✓	✓	✓	✓	✓	✓	
Fan cover for textile industry [16]	**F75**	✓	✓	✓	✓	✓	✓	
Metal external fan	**F76**	✓	✓	✓	✓	✓	✓	
Without external fan and without fan cover	**F90**	✓	✓	✓	✓	✓	✓	
Anti-condensation heating for 230 V (2 terminals)	**Q02**	✓	✓	✓	✓	✓	✓	
Anti-condensation heating for 115 V (2 terminals)	**Q03**	✓	✓	✓	✓	✓	✓	
Rating plate and additional rating plates								
Second rating plate, loose	**M10**	✓	✓	✓	✓	✓	✓	
Rating plate, stainless steel	**M11**	✓	✓	✓	✓	✓	✓	
Additional rating plate with customer specifications	**Y82** • and customer specifications	✓	✓	✓	✓	✓	✓	
Additional information on rating plate and on package label (max. 20 characters)	**Y84** • and customer specifications	✓	✓	✓	✓	✓	✓	
Adhesive label, supplied loose (printed with: Article No., Serial No.; 2 lines of text)	**Y85** • and customer specifications	–	✓	✓	✓	✓	✓	

For legends and footnotes, see page 4/44.

© Siemens AG 2018

Options – 1FP10.4 aluminum series

Special versions	Additional identification code **-Z** with order code and plain text if required		Frame size 80	112	132	160	180	200	Motor version
			1FP10.4						Super Premium Efficiency
1FP10.4- . . . . . - . . . . -Z	Order code								
Packaging, safety notes, documentation and test certificates									
Printed German/English Operating Instructions (compact) enclosed [17]			□	□	□	□	□	□	
Printed German/English Operating Instructions (compact) enclosed in each wire-lattice pallet	**B01**		○	○	○	○	○	○	
Acceptance test certificate 3.1 according to EN 10204 [18]	**B02**		✓	✓	✓	✓	✓	✓	
Printed German/English Operating Instructions enclosed	**B04**		✓	✓	✓	✓	✓	✓	
Document - Electrical datasheet	**B60**		✓	✓	✓	✓	✓	✓	
Document - Order dimensional drawing	**B61**		✓	✓	✓	✓	✓	✓	
Type test with heat run for horizontal motors, with acceptance	**B83**		✓	✓	✓	✓	✓	✓	
"Basic" documentation package	**B90**	*New!*	✓	✓	✓	✓	✓	✓	
"Advanced" documentation package	**B91**	*New!*	✓	✓	✓	✓	✓	✓	
"Projects" documentation package	**B92**	*New!*	✓	✓	✓	✓	✓	✓	
Wire-lattice pallet packaging	**B99**		○	○	○	○	○	○	
Connected in star for shipping	**M01**		–	✓	✓	✓	✓	✓	
Connected in delta for dispatch	**M02**		–	✓	✓	✓	✓	✓	

□ Standard version
○ Without additional charge
• This order code only determines the price of the version – Additional plain text is required.
✓ With additional charge
O. R. Possible on request
– Not possible

4

1) For order code **H08**, feet dimensions differing from EN 50347. Further information is available in the DT Configurator (see Appendix, "Tools and engineering").

2) With IM B5 flange, only possible in combination with order code **H08**.

3) The grease lifetime specified in Catalog Section 1 "Introduction" refers to CT 40 °C. If the coolant temperature is increased by 10 K, the grease lifetime and regreasing interval are halved.

4) A second shaft extension is not possible. Please inquire for mounted brakes.

5) For order codes **F10**, **F11**, and **F12**, the brake supply voltage must be specified or ordered.

6) In combination with a separately driven fan (order code **F70**) the 1XP8032-10 rotary pulse encoder is used instead of 1XP8012-10 or 1XP8032-20 is used instead of 1XP8012-20.

7) As standard, motors that are prepared for additional mounted components (order codes **G40**, **G41**, **G42**) are shipped without protective cover. If a protective cover is requested as a cover or mechanical protection for mounted components provided by the customer, this can be ordered with order code **G43**. Not possible in combination with order code **L00** vibration severity grade B. In combination with a separately driven fan (order code **F70**) the 1XP8032-10 rotary pulse encoder is used instead of 1XP8012-10 or 1XP8032-20 is used instead of 1XP8012-20.

8) Order code **H00** provides mechanical protection for encoders.

9) Supplied with the condensation drainage holes sealed at the drive end DE and non-drive end NDE (IP55, IP56, IP65). If the condensation drainage holes are required for motors of the IM B6, IM B7 or IM B8 type of construction (feet on side or top), the motors must be ordered in the respective type of construction and with order code **H03**, so that the condensation drainage holes will be placed in the correct position.

10) Not possible in combination with HOG 9 DN 1024 I rotary pulse encoder (order code **G05**) and/or 2LM8 brake (order code **F01**).

11) Not possible in combination with 2LM8 brake (order code **F01**).

12) As standard, motors that are prepared for additional mounted components (order codes **G40**, **G41**, **G42**) are shipped without protective cover. If a protective cover is requested as a cover or mechanical protection for mounted components provided by the customer, this can be ordered with order code **G43**. Not possible in combination with order code **L00** vibration severity grade B.

13) Not possible for type of construction IM V3.

14) Not possible when brake is mounted.

15) When motors are ordered that have a longer or shorter shaft extension than normal, the required position and length of the feather keyway must be specified in a sketch. It must be ensured that only feather keys in accordance with DIN 6885, Form A are permitted to be used. The feather keyway is positioned centrally on the shaft extension. The length is defined by the manufacturer in accordance with the appropriate standard. Not valid for: Conical shafts, non-standard threaded journals, non-standard shaft tolerances, friction welded journals, extremely "thin" shafts, special geometry dimensions (e.g. square journals), hollow shafts. Valid for non-standard shaft extensions DE or NDE. The feather keys are supplied in every case. For order codes **Y58**, **Y59** and **L05** the following applies:
- Dimensions D and DA ≤ ball bearing inner diameter (see dimension tables for "Dimensions")
- Dimensions E and EA ≤ 2 × length E (standard) of the shaft extension.
For an explanation of the order codes, see Catalog Section 1 "Introduction".

16) The special requirements of the textile industry regarding the sheet metal cover open up the possibility that a finger may be inserted between the cover and housing. The customer must implement appropriate measures to ensure that the installed system is "finger-safe".

17) The Operating Instructions (Compact) are available in PDF format for all official EU languages at http://support.automation.siemens.com/WW/view/en/40761976

18) The delivery time for the factory test certificate may differ from the delivery time for the motor and will be dispatched by e-mail.

19) Not UL-certified. Not in combination with option **D31**.

20) Not possible in combination with order codes **R70** and **R71**.

© Siemens AG 2018

Selection and ordering data

Special versions	Additional identification code **-Z** with order code and plain text if required	Frame size 80	112	132	160	180	200	Motor version
		1FP15.4						Super Premium Efficiency
1FP15.4- . . . . . - . . . . -Z	Order code							
Motor protection								
1 or 3 PTC thermistors – for tripping (2 terminals) [2) 3)]	**Q11**	–	–	✓	✓	✓	✓	
2 or 6 PTC thermistors – for alarm and tripping (4 terminals) [3)]	**Q12**	–	–	✓	✓	✓	✓	
1 KTY84-130 temperature sensor (2 terminals) [3)]	**Q23**	–	–	✓	✓	✓	✓	
2 KTY84-130 temperature sensor (4 terminals) [3)]	**Q25**	–	–	✓	✓	✓	✓	
3 bimetal sensors (NC contacts) for tripping (2 terminals) [3)]	**Q31**	–	–	✓	✓	✓	✓	
6 bimetal sensors (NC contacts) for alarm and tripping (4 terminals)	**Q32**	–	–	–	–	✓	✓	
3 bimetal sensors (NC contacts) for tripping (6 terminals)	**Q33**	–	–	✓	✓	✓	✓	
6 bimetal sensors (NC contacts) thermostat for alarm and tripping (12 terminals)	**Q34**	–	–	–	–	✓	✓	
1 Pt1000 resistance thermometer (2 terminals) [20)]	**Q35**	✓	✓	✓	✓	✓	✓	
2 Pt1000 resistance thermometers (4 terminals) [20)]	**Q36**	✓	✓	✓	✓	✓	✓	
3 Pt100 resistance thermometers – 2-wire input (6 terminals)	**Q60**	–	✓	✓	✓	✓	✓	
1 Pt100 resistance thermometer – 2-wire input (2 terminals)	**Q62**	–	✓	✓	✓	✓	✓	
3 Pt100 resistance thermometers – 3-wire input (9 terminals)	**Q63**	–	✓	✓	✓	✓	✓	
6 Pt100 resistance thermometers – 3-wire input (18 terminals)	**Q64**	–	✓	✓	✓	✓	✓	
2 Pt100 screw-in thermometers in basic configuration for bearing (2 terminals) [1)]	**Q72**	–	–	–	–	✓	✓	
2 Pt100 screw-in thermometers in 3-wire input for bearing (6 terminals)	**Q78**	–	–	–	–	✓	✓	
2 Pt100 double screw-in thermometers in 3-wire input for bearing (12 terminals)	**Q79**	–	–	–	–	✓	✓	
Motor connection and terminal box								
External grounding	**H04**	✓	✓	✓	✓	□	□	
Terminal box on NDE [2)]	**H08**	✓	–	–	–	✓	✓	
Second external grounding	**H70**	✓	✓	○	○	✓	✓	
Rotation of the terminal box through 90°, entry from DE	**R10**	✓	✓	○	○	✓	✓	
Rotation of the terminal box through 90°, entry from NDE	**R11**	○	○	○	○	✓	✓	
Rotation of the terminal box through 180°	**R12**	○	○	○	○	✓	✓	
One EMC cable gland	**R14**	–	–	–	–	✓	✓	
One metal cable gland	**R15**	✓	✓	✓	✓	✓	✓	
EMC cable gland, maximum configuration	**R16**	✓	✓	–	–	✓	✓	
Larger terminal box	**R50**	✓	✓	✓	✓	✓	✓	
Terminal box without cable entry opening	**R51**	–	–	–	–	○	○	
Drilled removable entry plate	**R52**	–	–	–	–	✓	✓	
Undrilled removable entry plate	**R53**	–	–	–	–	✓	✓	
Cast-iron auxiliary terminal box (small)	**R62**	–	–	–	–	✓	✓	
Silicone-free version		–	–	□	□	□	□	
Non-standard threaded through hole (NPT or G thread)	**Y61** • and customer specifications	–	–	–	–	✓	✓	

For legend, see page 4/48 and for footnotes, see page 4/49.

© Siemens AG 2018

Options – 1FP15.4 cast-iron series

Special versions	Additional identification code **-Z** with order code and plain text if required	Frame size 80	112	132	160	180	200	Motor version
		1FP15.4						Super Premium Efficiency
1FP15.4-.....-.....-Z	Order code							
Windings and insulation								
Temperature class 180 (H) at rated power and max. CT 60 °C [3]	**N11**	✓	✓	✓	✓	✓	✓	
Increased air humidity/temperature with 30 to 60 g water per m^3 of air	**N30**	✓	✓	✓	✓	✓	✓	
Increased air humidity/temperature with 60 to 100 g water per m^3 of air	**N31**	✓	✓	✓	✓	✓	✓	
Colors and paint finish								
Standard paint finish C2 in RAL 7030 stone gray		◘	◘	◘	◘	◘	◘	
Unpainted (only cast-iron parts primed)	**S00**	○	○	○	○	○	○	
Unpainted, only primed	**S01**	✓	✓	✓	✓	✓	✓	
Special paint finish C3	**S02**	✓	✓	✓	✓	✓	✓	
Special paint finish sea air resistant C4	**S03**	✓	✓	✓	✓	✓	✓	
Special paint finish for use offshore C5	**S04**	✓	✓	✓	✓	✓	✓	
Internal coating	**S05**	✓	✓	✓	✓	✓	✓	
Paint finish in other standard RAL colors: RAL 1002, 1013, 1015, 1019, 2003, 2004, 3000, 3007, 5002, 5007, 5009, 5010, 5012, 5015, 5017, 5018, 5019, 6011, 6019, 6021, 7000, 7001, 7004, 7011, 7016, 7022, 7031, 7032, 7033, 7035, 9001, 9002, 9005 (see Catalog Section 1 "Introduction")	**Y53** • and paint finish RAL....	✓	✓	–	✓	✓	✓	
Paint finish in special RAL colors: For RAL colors, see "Special paint finish in special RAL colors" (see Catalog Section 1 "Introduction")	**Y56** • and paint finish RAL....	✓	✓	✓	✓	✓	✓	
Modular technology – Basic versions [4]								
Mounting of holding brake (standard assignment) [5]	**F01**	O. R.	✓	✓	✓	✓	✓	
Mounted separately driven fan	**F70**	–	–	✓	✓	✓	✓	
Mounting of 1XP8012-10 (HTL) rotary pulse encoder [7] [8]	**G01**	✓	✓	✓	✓	✓	✓	
Mounting of 1XP8012-20 (TTL) rotary pulse encoder [7] [8]	**G02**	✓	✓	✓	✓	✓	✓	
Modular technology – Additional versions								
Brake supply voltage 24 V DC	**F10**	–	✓	✓	✓	✓	✓	
Brake supply voltage 230 V AC, 50/60 Hz	**F11**	○	○	○	○	○	○	
Brake supply voltage 400 V AC, 50/60 Hz	**F12**	✓	✓	✓	✓	✓	✓	
Backstop, counterclockwise motion blocked, clockwise direction of rotation	**F40**	–	–	–	–	✓	✓	
Backstop, clockwise motion blocked, counterclockwise direction of rotation	**F41**	–	–	–	–	✓	✓	
Mechanical manual brake release with lever (no locking)	**F50**	–	✓	✓	✓	✓	✓	
Special technology [5]								
Mounting of LL 861 900 220 rotary pulse encoder [8]	**G04**	–	✓	✓	✓	✓	✓	
Mounting of HOG 9 DN 1024 I rotary pulse encoder [8]	**G05**	–	✓	✓	✓	✓	✓	
Mounting of HOG 10 D 1024 I rotary pulse encoder [8]	**G06**	–	✓	✓	✓	✓	✓	
Mounting of POG 10 D rotary pulse encoder (only in combination with separately driven fan or brake) [19]	**G07**	–	–	–	–	✓	✓	
Mounting of POG 9 rotary pulse encoder (only in combination with separately driven fan or brake) [19]	**G08**	–	–	–	–	✓	✓	
Mounting of a special type of rotary pulse encoder	**Y70** • and customer specifications	–	–	–	–	O. R.	O. R.	

For legend, see page 4/48 and for footnotes, see page 4/49.

© Siemens AG 2018

Special versions	Additional identification code **-Z** with order code and plain text if required	Frame size 80	112	132	160	180	200	Motor version
		1FP15.4						Super Premium Efficiency
1FP15.4-.....-.....-Z	Order code							
Mechanical version and degrees of protection								
Prepared for mountings, centering hole only	**G40**	✓	✓	✓	✓	□	□	
Prepared for mountings with D12 shaft	**G41**	✓	✓	✓	✓	✓	✓	
Prepared for mountings with D16 shaft	**G42**	✓	✓	✓	✓	✓	✓	
Mechanical protection for encoder	**G43**	✓	✓	✓	✓	✓	✓	
Protective cover [6) 8) 9)]	**H00**	✓	✓	✓	✓	✓	✓	
Screwed-on (instead of cast) feet	**H01**	–	–	✓	✓	✓	✓	
Vibration-proof version; vibration resistance to Class 3M4 according to IEC 60721-3-3:1994	**H02**	✓	✓	–	–	✓	✓	
Condensation drainage holes		□	□	□	□	□	□	
Rust-resistant screws (externally)	**H07**	✓	✓	✓	✓	✓	✓	
Housing with screw mounting	**H10**	✓	✓	✓	✓	✓	✓	
IP65 degree of protection [10)]	**H20**	✓	✓	✓	✓	✓	✓	
IP54 degree of protection	**H21**	–	–	–	–	✓	✓	
IP56 degree of protection [11)]	**H22**	✓	✓	✓	✓	✓	✓	
Drive-end seal for flange-mounted motors, oil-tight to 0.1 bar [12)]	**H23**	✓	✓	✓	✓	✓	✓	
Coolant temperature and installation altitude								
Coolant temperature –50 to +40 °C	**D02**	–	–	–	–	✓	✓	
Coolant temperature –40 to +40 °C [13)]	**D03**	✓	✓	✓	✓	✓	✓	
Coolant temperature –30 to +40 °C	**D04**	✓	✓	✓	✓	✓	✓	
Versions in accordance with standards and specifications								
Version according to UL and CSA (Canadian regulation)	**D39**	✓	✓	✓	✓	✓	✓	
Bearings and lubrication								
Located bearing DE	**L20**	✓	✓	✓	✓	✓	✓	
Located bearing NDE	**L21**	✓	✓	✓	□	□	□	
Bearing design for increased cantilever forces	**L22**	✓	✓	✓	✓	✓	✓	
Regreasing device [14)]	**L23**	–	✓	✓	✓	✓	✓	
Bearings reinforced at both ends for DE and NDE, bearing size 63	**L25**	✓	✓	✓	✓	✓	✓	
Reinforced bearings at both DE and NDE, DE bearing for increased cantilever forces	**L28**	–	–	–	–	✓	✓	
Measuring nipple for SPM shock pulse measurement for bearing inspection [14)]	**Q01**	–	✓	✓	✓	✓	✓	
Balance and vibration severity								
Half-key balancing (standard)		□	□	□	□	□	□	
Balancing without feather key	**L01**	✓	✓	✓	✓	✓	✓	
Full-key balancing	**L02**	✓	✓	✓	✓	✓	✓	
Shaft and rotor								
Shaft extension with standard dimensions, without feather keyway	**L04**	–	–	✓	✓	✓	✓	
Standard, cylindrical shaft extension (second shaft extension) NDE acc. to EN 50347	**L05**	✓	✓	✓	✓	✓	✓	
Standard shaft made of stainless steel (e.g. 1.4021)	**L06**	✓	✓	✓	✓	✓	✓	
Concentricity of shaft extension in accordance with DIN 42955 Tolerance R	**L07**	✓	✓	✓	✓	✓	✓	
Concentricity of shaft extension, coaxiality, and linear movement in accordance with DIN 42955 Tolerance R for flange-mounted motors	**L08**	✓	✓	✓	✓	✓	✓	
Non-standard cylindrical shaft extension, DE [15)]	**Y58** • and customer specifications	✓	✓	✓	✓	✓	✓	
Non-standard cylindrical shaft extension, NDE [15)]	**Y59** • and customer specifications	✓	✓	✓	✓	✓	✓	
Special shaft steel	**Y60** • and customer specifications	–	–	–	–	O. R.	O. R.	

For legend, see page 4/48 and for footnotes, see page 4/49.

© Siemens AG 2018

Options – 1FP15.4 cast-iron series

Special versions	Additional identification code **-Z** with order code and plain text if required		Frame size 80	112	132	160	180	200	Motor version
			1FP15.4						Super Premium Efficiency
1FP15.4-. . . . . -. . . . -Z	Order code								
Heating and ventilation									
Sheet metal fan cover	**F74**		✓	✓	✓	✓	✓	✓	
Metal external fan	**F76**		✓	✓	✓	✓	✓	✓	
Anti-condensation heating for 230 V (2 terminals)	**Q02**		✓	✓	✓	✓	✓	✓	
Anti-condensation heating for 115 V (2 terminals)	**Q03**		✓	✓	✓	✓	✓	✓	
Rating plate and additional rating plates									
Second rating plate, loose	**M10**		✓	✓	✓	✓	✓	✓	
Rating plate, stainless steel	**M11**		✓	✓	✓	✓	✓	✓	
Additional rating plate with customer specifications	**Y82** • and customer specifications		✓	✓	✓	✓	✓	✓	
Additional information on rating plate and on package label (max.20 characters)	**Y84** • and customer specifications		✓	✓	✓	✓	✓	✓	
Adhesive label, supplied loose (printed with: Article No., Serial No.; 2 lines of text)	**Y85** • and customer specifications		–	–	–	–	✓	✓	
Extension of the liability for defects									
Extension of the liability for defects by 12 months to a total of 24 months (2 years) from delivery [16]	**Q80**		–	–	–	–	✓	✓	
Extension of the liability for defects by 24 months to a total of 36 months (3 years) from delivery [16]	**Q82**		–	–	–	–	✓	✓	
Packaging, safety notes, documentation and test certificates									
Acceptance test certificate 3.1 according to EN 10204 [17]	**B02**		✓	✓	✓	✓	✓	✓	
Printed German/English Operating Instructions enclosed [18]	**B04**		–	✓	✓	✓	✓	✓	
Document - Electrical datasheet	**B60**		–	✓	✓	✓	✓	✓	
Document - Order dimensional drawing	**B61**		–	✓	✓	✓	✓	✓	
Standard test (routine test) with acceptance	**B65**		–	–	–	–	✓	✓	
Type test with heat run for horizontal motors, with acceptance	**B83**		✓	✓	✓	✓	✓	✓	
"Basic" documentation package	**B90**	*New!*	✓	✓	✓	✓	✓	✓	
"Advanced" documentation package	**B91**	*New!*	✓	✓	✓	✓	✓	✓	
"Projects" documentation package	**B92**	*New!*	✓	✓	✓	✓	✓	✓	
Connected in star for shipping	**M01**		✓	✓	✓	✓	✓	✓	
Connected in delta for dispatch	**M02**		✓	✓	✓	✓	✓	✓	

□ Standard version
○ Without additional charge
• This order code only determines the price of the version – Additional plain text is required.
✓ With additional charge
O. R. Possible on request
– Not possible

For footnotes, see page 4/49.

© Siemens AG 2018

1) Evaluation with associated tripping unit (see Catalog IC 10) is recommended.

2) For order code **H08**, feet dimensions differing from EN 50347 Further information is available in the DT Configurator (see Appendix, "Tools and engineering").

3) The grease lifetime specified in Catalog Section 1 "Introduction" refers to CT 40 °C. If the coolant temperature is increased by 10 K, the grease lifetime and regreasing interval are halved.

4) A second shaft extension is not possible. Please inquire for mounted brakes.

5) For order codes **F10**, **F11**, and **F12**, the brake supply voltage must be specified or ordered.

6) The 1XP8 rotary pulse encoders are fitted with a protective cover as standard. The protective cover is omitted at the factory when a rotary pulse encoder is combined with a separately driven fan, because in this case the rotary pulse encoder is installed under the fan cover.

7) In combination with a separately driven fan (order code **F70**) the 1XP8032-10 rotary pulse encoder is used instead of 1XP8012-10 or 1XP8032-20 is used instead of 1XP8012-20.

8) LL and HOG rotary pulse encoders up to frame size 160 are fitted with a protective cover as standard. The protective cover is omitted at the factory when a rotary pulse encoder is combined with a separately driven fan, because in this case the rotary pulse encoder is installed under the fan cover.

9) Order code **H00** provides mechanical protection for encoders.

10) Not possible in combination with HOG 9 DN 1024 I rotary pulse encoder (order code **G05**) and/or brake 2LM8 (order code **F01**).

11) Not possible in combination with 2LM8 brake – order code **F01**.

12) Not possible for type of construction IM V3.

13) In connection with mountings, the respective technical specifications must be observed, please inquire before ordering.

14) Up to frame size 160 not possible when brake is mounted.

15) When motors are ordered that have a longer or shorter shaft extension than normal, the required position and length of the feather keyway must be specified in a sketch. It must be ensured that only feather keys in accordance with DIN 6885, Form A are permitted to be used. The feather keyway is positioned centrally on the shaft extension. The length is defined by the manufacturer in accordance with the appropriate standard. Not valid for: Conical shafts, non-standard threaded journals, non-standard shaft tolerances, friction welded journals, extremely "thin" shafts, special geometry dimensions (e.g. square journals), hollow shafts. Valid for non-standard shaft extensions DE or NDE. The feather keys are supplied in every case. For order codes **Y58**, **Y59** and **L05** the following applies:
- Dimensions D and DA ≤ ball bearing inner diameter (see dimension tables for "Dimensions")
- Dimensions E and EA ≤ 2 × length E (standard) of the shaft extension.
For an explanation of the order codes, see Catalog Section 1 "Introduction".

16) Wearing parts (bearings) are excluded from the warranty extension.

17) The delivery time for the factory test certificate may differ from the delivery time for the motor.

18) The Operating Instructions (Compact) are available in PDF format for all official EU languages at http://support.automation.siemens.com/WW/view/en/10803948/133300

19) Option (encoder mounting) is only possible for motors with a mounted separately driven fan or for naturally cooled motors (without an external fan). This option can be used in combination with brakes of type KFB! This option cannot be used in combination with brakes of type 2LM8!

20) Not UL and CSA certified. Not available in combination with order code **D31**.

© Siemens AG 2018

Overview

Slide rails with fixing bolts and tensioning screws according to DIN 42923

Slide rails are used to tension the belt of a machine easily and conveniently when there is no belt-tensioning pulley. They are fixed to the base using stone bolts or foundation blocks.

The assignment of slide rails to motor size can be found in DIN 42923. For motors of frame sizes 355 to 450, there are no standardized slide rails (please inquire).

Available from:

Lütgert & Co. GmbH
Postfach 42 51
33276 Gütersloh, Germany
Phone +49 (5241) 7407-0
Fax +49 (5241) 7407-90

www.luetgert-antriebe.de
Email: info@luetgert-antriebe.de

Foundation block according to DIN 799

The foundation blocks are inserted into the stone foundation and embedded in concrete. They are used for fixing machines of medium size, slide rails, pedestal bearings, base frames, etc. After the fixing bolts have been unscrewed, the machines can be shifted without them having to be lifted.

When the machine is initially installed, the foundation block that is bolted to the machine (without washers) and fitted with taper pins is not embedded with concrete until the machine has been fully aligned. In this case, the machine is positioned 2 to 3 mm lower. The difference in shaft height is compensated by inserting shims on final installation. The taper pins safeguard the exact position of the machine when it is repeatedly removed and replaced without the need for realignment.

Available from:

Lütgert & Co. GmbH
Postfach 42 51
33276 Gütersloh, Germany
Phone +49 (5241) 7407-0
Fax +49 (5241) 7407-90

www.luetgert-antriebe.de
Email: info@luetgert-antriebe.de

Taper pins according to DIN 258 with threaded ends and constant taper lengths

Taper pins are used for components that are repeatedly removed. The drilled hole is conically ground using a conical reamer until the pin can be pushed in by hand until the cone shoulder lies approx. 3 to 4 mm above the rim of the hole.

It can then be driven in using a hammer until it is correctly seated. The pin is removed from the drilled hole by screwing on the nut and tightening it.

Standardized taper pins are commercially available.

For instance, available from:

Otto Roth GmbH & Co. KG
Rutesheimer Strasse 22
70499 Stuttgart, Germany
Tel. +49 711 1388-0
Fax. +49 711 1388-233

www.ottoroth.de
Email: info@ottoroth.de

© Siemens AG 2018

More information

Replacement motors and repair parts

- Commitment to provide replacement motors and repair parts following delivery of the motor:
  - for up to 3 years after delivery of the original motor, in the event of total motor failure, Siemens will supply a comparable spare motor with regard to the mounting dimensions and functions (the type series may vary).
  - if a spare motor is provided within the 3-year period, this will not mean that the warranty restarts.
  - Replacement motors delivered after the active production of the machine series are also identified as spare motors on the rating plate.
  - Spare parts are offered only for these spare motors on request; repair and replacement are not possible.
  - after a period of 3 years (after the delivery of the original motor), it is only possible to repair these motors (depending on the availability of the spare parts required).
  - for up to 5 years after the delivery of the original motor, spare parts will be available and for a further 5 years, Siemens will provide information about spare parts and will supply documents when required.
- When repair parts are ordered, the following details must be provided:
  - Designation and part number
  - Article No. and factory number of the motor.
- For bearing types, see Catalog Section 1 "Introduction".
- For standard components, a commitment to supply repaired parts does not apply.
- Support hotline
  In Germany
  Phone +49 911 895 7 222

You will find telephone numbers for other countries on our Internet site:
www.siemens.com/automation/service&support

© Siemens AG 2018

Overall dimensions

Overview

Overall dimensions

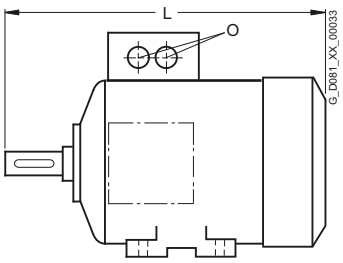

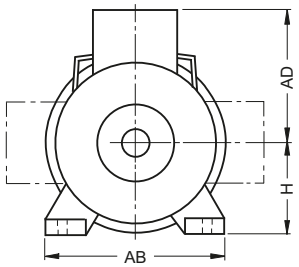

Frame size	Type	Dimension				
		L	AD	H	AB	O
80 M	Aluminum series, self-ventilated					
	1FP10.4- 0DB2 0DB3	292 327	121	80	150	1 × M25 × 1.5
	Cast-iron series, self-ventilated					
	1FP15.4- 0DB2 0DB3	292 327	158	80	150	2 × M25 × 1.5
112 M	Aluminum series, self-ventilated					
	1FP10.4	389 [1]	177	112	226	2 × M32 × 1.5
	Cast-iron series, self-ventilated					
	1FP15.4	415.5	195	112	226	2 × M32 × 1.5
132 S	Aluminum series, self-ventilated					
	1FP10.4	465 [1]	202	132	256	2 × M32 × 1.5
	Cast-iron series, self-ventilated					
	1FP15.4	466.5	214.5	132	256	2 × M32 × 1.5
132 M	Aluminum series, self-ventilated					
	1FP10.4	515 [1]	202	132	256	2 × M32 × 1.5
	Cast-iron series, self-ventilated					
	1FP15.4	516.5	214.5	132	256	2 × M32 × 1.5
160 M	Aluminum series, self-ventilated					
	1FP10.4	606 [1]	236.5	160	300	2 × M40 × 1.5
	Cast-iron series, self-ventilated					
	1FP15.4	606	265	160	300	2 × M40 × 1.5
160 L	Aluminum series, self-ventilated					
	1FP10.4	666 [1]	236.5	160	300	2 × M40 × 1.5
	Cast-iron series, self-ventilated					
	1FP15.4	666	265	160	300	2 × M40 × 1.5
180 M/L	Aluminum series, self-ventilated					
	1FP10.4- 1EB2, 1EB4	698	259	180	339	2 × M40 × 1.5
	Cast-iron series, self-ventilated					
	1FP15.4- 1EB2, 1EF2 1EB4	668 698	286	180	339	2 × M40 × 1.5
200 L	Aluminum series, self-ventilated					
	1FP10.4- 2AB5	746	296	200	378	2 × M50 × 1.5
	Cast-iron series, self-ventilated					
	1FP15.4-	721	315	200	378	2 × M50 × 1.5

[1] The length is specified as far as the tip of the fan cover.

© Siemens AG 2018

Overview (continued)

Notes on the dimensions

- Dimensional drawings according to EN 50347 and IEC 60072.
- Fits
  The shaft extensions specified in the dimension tables (DIN 748) and centering spigot diameters (EN 50347) are machined with the following fits:

Dimension designation	ISO fit EN ISO 286-2	
D, DA	to 30	j6
	over 30 to 50	k6
	over 50	m6
N	to 250	j6
	over 250	h6
F, FA		h9
K		H17
S	flange (FF)	H17

  The drilled holes of couplings and belt pulleys should have an ISO fit of at least H7.
- Dimension tolerances
  For the following dimensions, the admissible deviations are given below:

Dimension designation	Dimension	Admissible deviation
H	to 250	– 0.5
	over 250	– 1.0
E, EA		– 0.5

  Keyways and feather keyways (dimensions GA, GC, F and FA) are made in compliance with DIN 6885 Part 1.
- All dimensions are specified in mm.

Dimension sheet generator
(part of the DT Configurator)

A dimensional drawing can be created in the DT Configurator for every configurable motor. A dimensional drawing can be requested for every other motor.

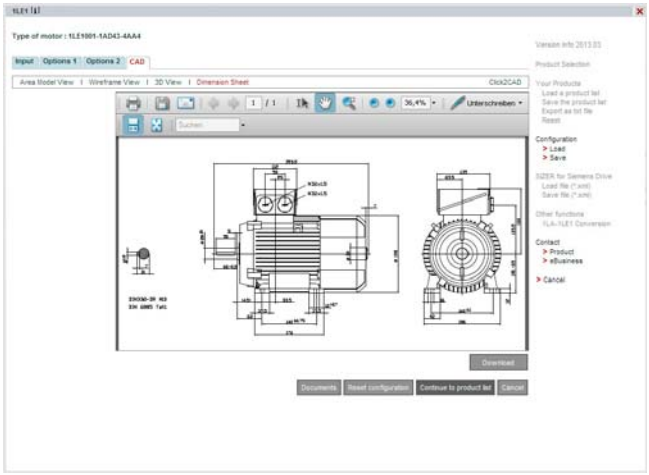

When a complete Article No. is entered with or without order codes, a dimensional drawing can be called up under the "Documentation" tab.

These dimensional drawings can be presented in different views and sections and printed.
The corresponding dimension sheets can be exported, saved and processed further in DXF format (interchange/import format for CAD systems) or as bitmap graphics.

Online access in the Siemens Industry Mall

The DT Configurator is integrated in the Siemens Industry Mall and can be used on the Internet without installation.
German: www.siemens.de/dt-konfigurator
English: www.siemens.com/dt-configurator

Offline access in the Interactive Catalog CA 01

The DT Configurator is also integrated on the DVD of the Interactive Catalog CA 01 – the offline version of Siemens Industry Mall. CA 01 can be ordered from the relevant Siemens sales office or via the Internet:
www.siemens.com/automation/CA01

© Siemens AG 2018

Dimensional drawings

Type of construction IM B3

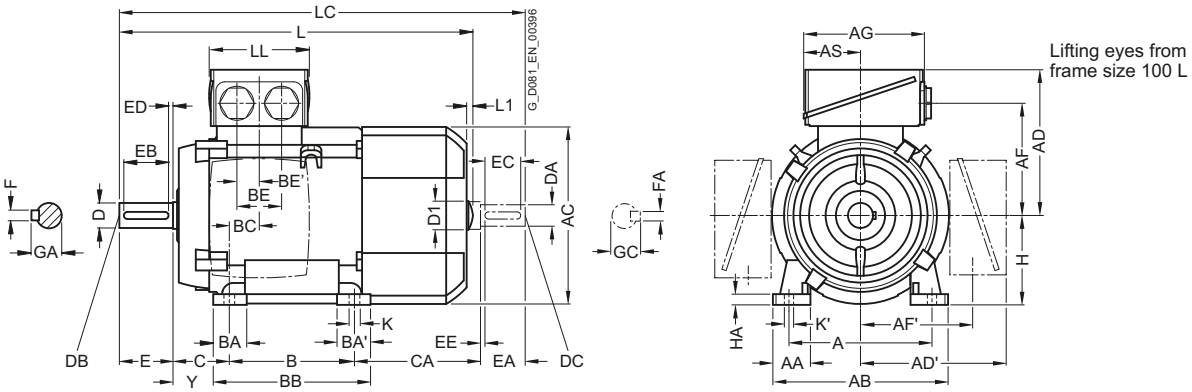

Types of construction IM B5 and IM V1

For flange dimensions, see page 1/53 (**Z** = the number of retaining holes)

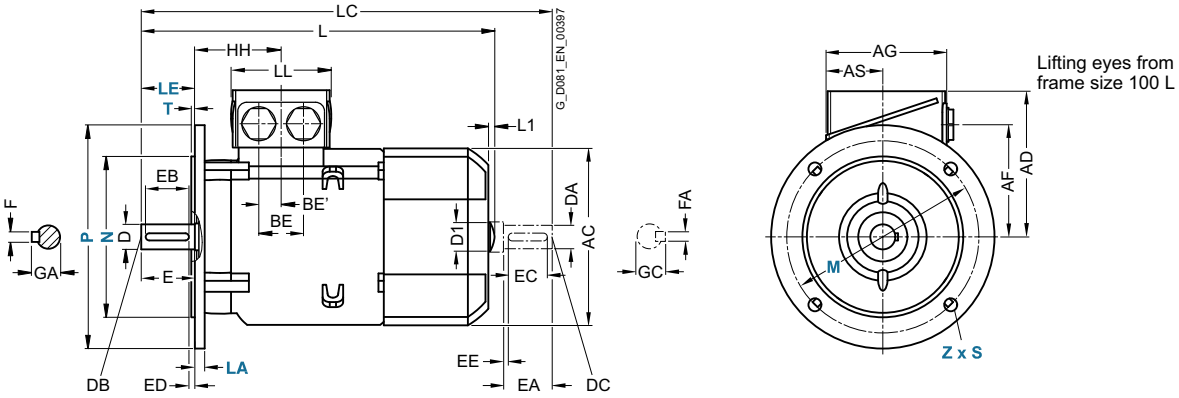

For motor			Dimension designation acc. to **IEC**																					
Frame size	Motor type 1FP10.4-	No. of poles	A	AA	AB	AC	AD	AD'	AF	AF'	AG	AS	B	BA	BA'	BB	BC	BE	BE'	C	CA	H	HA	Y
80 M	0DB2, 0DF2, 0DF3 0DB3	4	125	30.5	150	159	121	121	96.5	96.5	93	43	100	32	32	118	23	–	18 [1]	50	–	80	8	41
112 M	All	4	190	46	226	222	177	177	136.5	136.5	135	63.5	140	37.5	37.5	176	26	50	25	70	155	112	12	52
132 S	All	4	216	53	256	262	202	202	159.5	159.5	155	70.5	140	38	76 [2]	218 [4]	26.5	48	24	89	166.5	132	15	69
132 M	All	4	216	53	256	262	202	202	159.5	159.5	155	70.5	178	38	76	218	26.5	48	24	89	178.5	132	15	69
160 M	All	4	254	60	300	314	236.5	236.5	190	190	175	77.5	210	44	89 [3]	300 [5]	47	57	28.5	108	192	160	18	85
160 L	All	4	254	60	300	314	236.5	236.5	190	190	175	77.5	254	44	89	300	47	57	28.5	108	208	160	18	85
180 M	All	4	279	65	339	356	259	259	212.5	212.5	175	77.5	241	80	100	328	30	57	28.5	121	232	180	20	95
180 L	All	4	279	65	339	356	259	259	212.5	212.5	175	77.5	279	80	100	328	30	57	28.5	121	194	180	20	95
200 L	All	4	318	70	378	396	296	296	238	238	225	102.5	305	90	100	355	45	75	37.5	133	202	200	25	108

[1] Connecting hole for terminal box is on the side at the rear of the terminal box.

[2] With screwed-on feet, dimension BA' is 38 mm.

[3] With screwed-on feet, dimension BA' is 44 mm.

[4] With screwed-on feet, dimension BB is 180 mm.

[5] With screwed-on feet, dimension BB is 256 mm.

© Siemens AG 2018

Dimensional drawings (continued)

Type of construction IM B35

For flange dimensions, see page 1/53 (**Z** = the number of retaining holes)

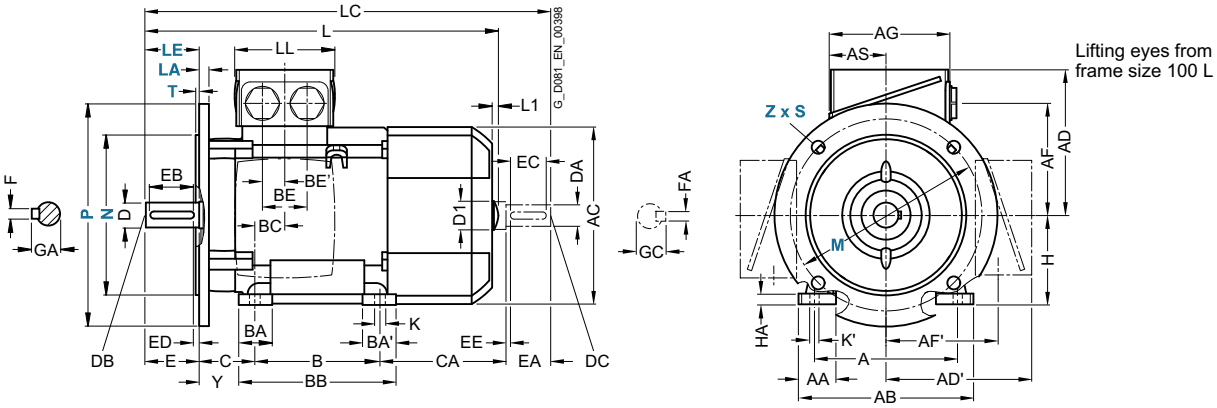

Type of construction IM B14

For flange dimensions, see page 1/53 (**Z** = the number of retaining holes)

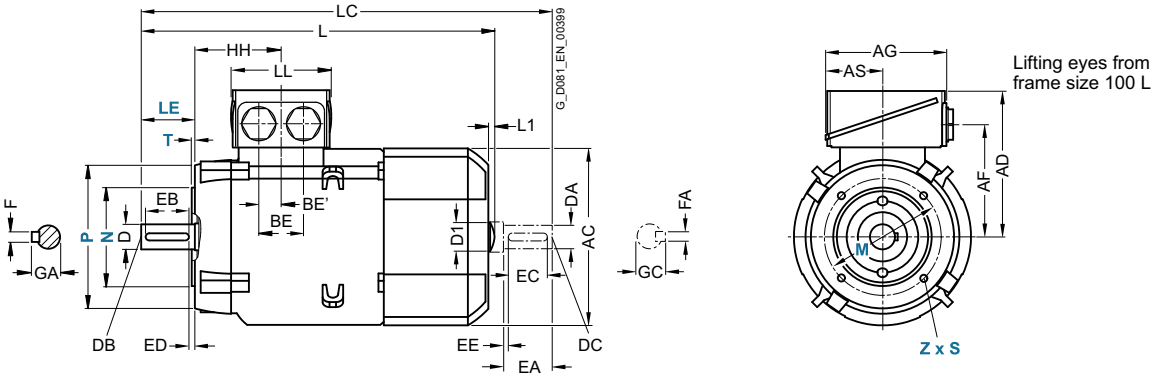

For motor			Dimension designation acc. to **IEC**								DE shaft extension							NDE shaft extension						
Frame size	Motor type 1FP10.4-	No. of poles	HH	K	K'	L[1)]	L1	D1	LC	LL	D	DB	E	EB	ED	F	GA	DA	DC	EA	EC	EE	FA	GC
80 M	0DB2, 0DF2, 0DF3 0DB3	4	73	9.5	13.5	292 327	–	–	343 378	79	19	M6	40	32	4	6	21.5	19	M6	40	32	4	6	21.5
112 M	All	4	96	12	16	389	7	32	475	112	28	M10	60	50	5	8	31	24	M8	50	40	5	8	27
132 S	All	4	115.5	12	16	465	8.5	39	535.5	130	38	M12	80	70	5	10	41	28	M10	60	50	5	8	31
132 M	All	4	115.5	12	16	515	8.5	39	585.5	130	38	M12	80	70	5	10	41	28	M10	60	50	5	8	31
160 M	All	4	155	15	19	606	10	45	730	145	42	M16	110	90	10	12	45	42	M16	110	90	10	12	45
160 L	All	4	155	15	19	666	10	45	790	145	42	M16	110	90	10	12	45	42	M16	110	90	10	12	45
180 M	All	4	151	14.5	19	698	–	–	814	145	48	M16	110	100	5	14	52	48	M16	110	100	5	14	52
180 L	All	4	151	14.5	19	698	–	–	814	145	48	M16	110	100	5	14	52	48	M16	110	100	5	14	52
200 L	All	4	178	18.5	25	746	–	–	860	185	55	M20	110	100	5	16	59	55	M20	110	100	5	16	59

[1)] The length is specified as far as the tip of the fan cover.

© Siemens AG 2018

Dimensional drawings

Type of construction IM B3

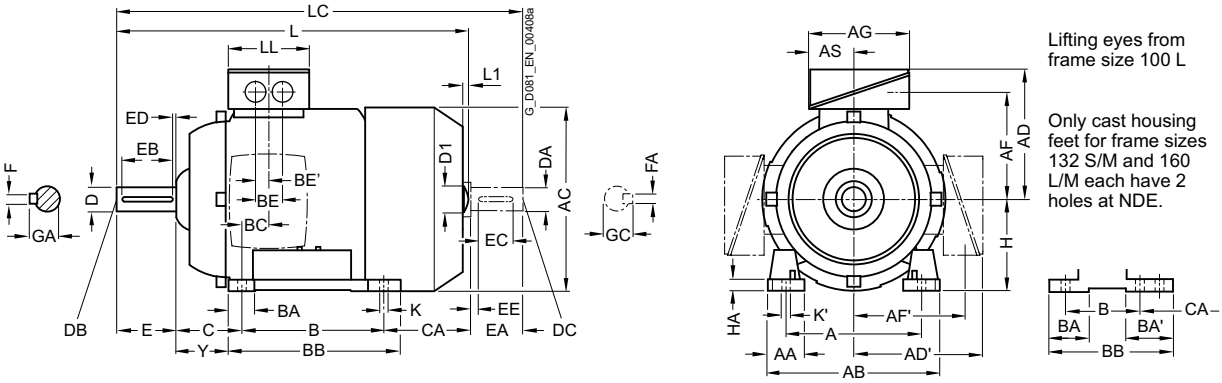

Types of construction IM B5 and IM V1

For flange dimensions, see page 1/53 (**Z** = the number of retaining holes)

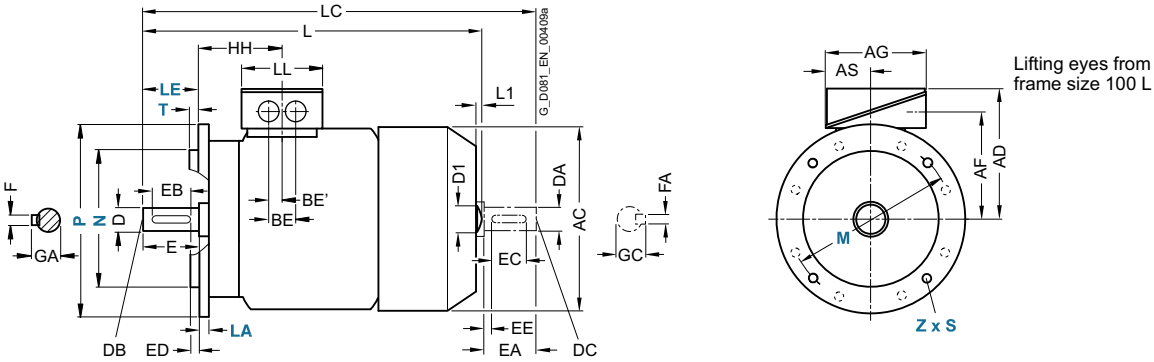

For motor			Dimension designation acc. to **IEC**																				
Frame size	Motor type 1FP15.4-	No. of poles	A	AA	AB	AC	AD	AD'	AF	AF'	AG	AS	B	BA	BA'	BB	BC	BE	BE'	C	CA	H	HA	Y
80 M	0DB2 0DB3	4	125	30.5	150	162	158	158	122	122	129	62	100	32	32	118	22.5	36	18	50	–	80	8.5	41
112 M	All	4	190	46	226	239	195	195	150	150	163	80.5	140	48	48	176	30	48	24	70	155	112	12	52
132 S	All	4	216	53	256	281	214.5	214.5	169	169	163	80.5	140	52[1]	117[2]	218[2]	26.5	48	24	89	166.5	132	15	69
132 M	All	4	216	53	256	281	214.5	214.5	169	169	163	80.5	178	52[1]	89[3]	218	26.5	48	24	89	178.5	132	15	69
160 M	All	4	254	60	300	333.5	265	265	213	213	190	92	210	73[2]	117[2]	300[4]	37	60	30	108	192	160	18	85
160 L	All	4	254	60	300	333.5	265	265	213	213	190	92	254	73[2]	117[2]	300	37	60	30	108	208	160	18	85

[1] With screwed-on feet, this dimension is 41 mm.
[2] With screwed-on feet, this dimension is 51 mm.
[3] With screwed-on feet, this dimension is 79 mm.
[4] With screwed-on feet, this dimension is 180 mm.

© Siemens AG 2018

Dimensional drawings (continued)

Type of construction IM B35

For flange dimensions, see page 1/53 (**Z** = the number of retaining holes)

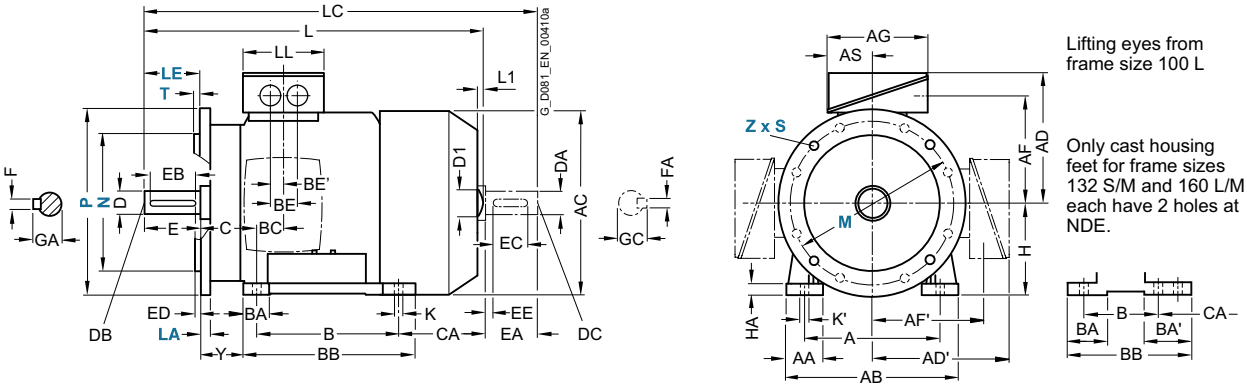

Type of construction IM B14

For flange dimensions, see page 1/53 (**Z** = the number of retaining holes)

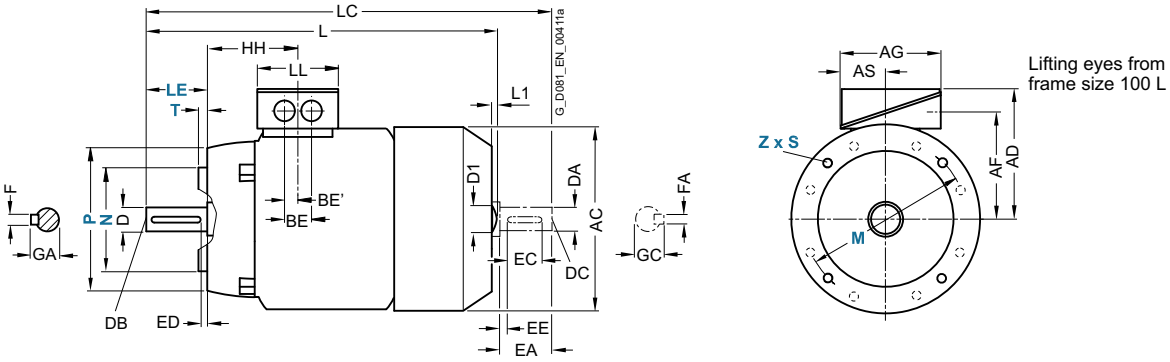

For motor			Dimension designation acc. to **IEC**								DE shaft extension							NDE shaft extension						
Frame size	Motor type 1FP15.4-	No. of poles	HH	K	K'	L	L1	D1	LC	LL	D	DB	E	EB	ED	F	GA	DA	DC	EA	EC	EE	FA	GC
80 M	0DB2 0DB3	4	71.5	10	10	292 327	–	–	342.5 377.5	102	19	M6	40	32	4	6	21.5	19	M6	40	22	4	6	21.5
112 M	All	4	100.5	12	16	415.5	7	32	475	134	28	M10	60	50	5	8	31	24	M8	50	40	5	8	27
132 S	All	4	115.5	12	16	466.5	8.5	39	535.5	134	38	M12	80	70	5	10	41	28	M10	60	50	5	8	31
132 M	All	4	115.5	12	16	516.5	8.5	39	585.5	134	38	M12	80	70	5	10	41	28	M10	60	50	5	8	31
160 M	All	4	145	15	19	606	10	45	730	165	42	M16	110	90	10	12	45	42	M16	110	90	10	12	45
160 L	All	4	145	15	19	666	10	45	790	165	42	M16	110	90	10	12	45	42	M16	110	90	10	12	45

© Siemens AG 2018

Dimensional drawings

Type of construction IM B3

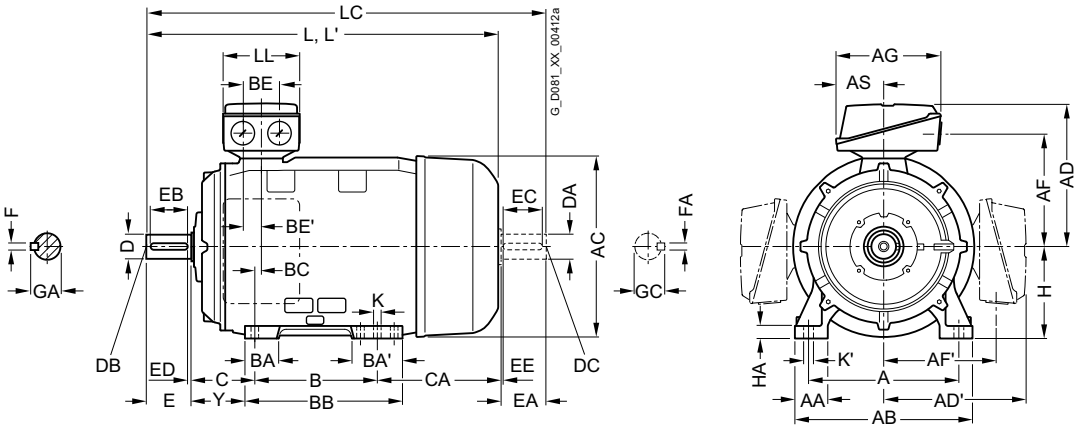

Types of construction IM B5 and IM V1

For flange dimensions, see page 1/53 (**Z** = the number of retaining holes)

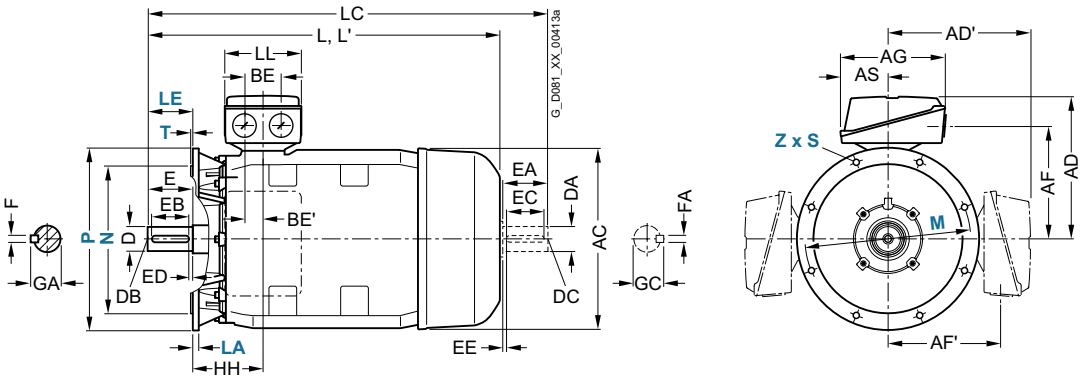

For motor			Dimension designation acc. to **IEC**																		
Frame size	Motor type 1FP15.4-	No. of poles	A	AA	AB	AC	AD	AD´	AF	AF´	AG	AS	B	BA	BA´	BB	BC	BE	BE´	C	CA
180 M/ 180 L	1EB2, 1EF2 1EB4	4	279	65	339	356	286	286	234	234	190	92	241 279	85	120	328	34	60	30	121	202
200 L	All	4	318	70	378	396	315	315	259	259	266	112	305	104	104	355	31	85	42.5	133	177

© Siemens AG 2018

Dimensional drawings (continued)

Type of construction IM B35

For flange dimensions, see page 1/53 (**Z** = the number of retaining holes)

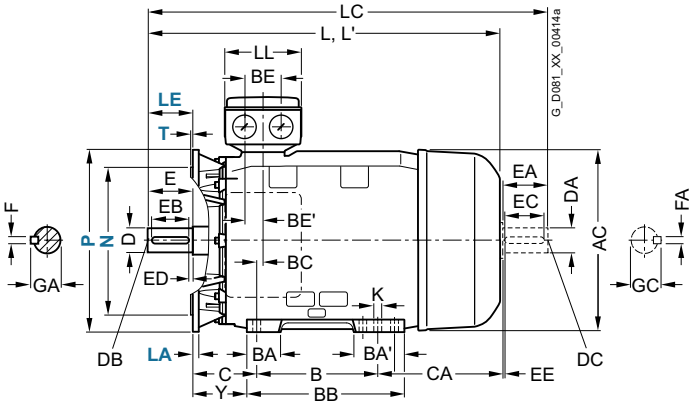

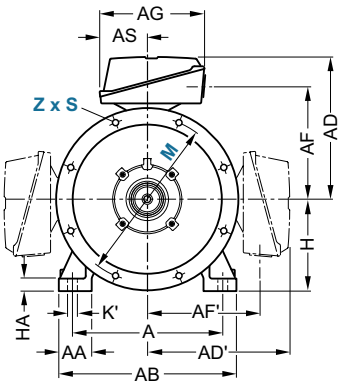

For motor			Dimension designation acc. to **IEC**										DE shaft extension							NDE shaft extension						
Frame size	Motor type 1FP15.4-	No. of poles	H	HA	Y	HH	K	K´	L	L´	LC[1]	LL	D	DB	E	EB	ED	F	GA	DA	DC	EA	EC	EE	FA	GC
180 M/ 180 L	1EB2, 1EF2 1EB4	4	180	20	95	155	15	19	668 698	668 698	784 814	165	48	M16	110	100	5	14	52	48	M16	110	100	5	14	51.5
200 L	All	4	200	25	108	164	19	25	721	755	835	197	55	M20	110	100	5	16	59	55	M20	110	100	5	16	59

[1] In the low-noise version, a second shaft extension and/or mounted encoder is not possible.

© Siemens AG 2018

Overview

SIMOTICS GP/SD VSD10 line motor series: 1LE109, 1LE159

SIMOTICS GP/SD VSD10 line motors are suitable for all sectors of industry as a result of their flexibility and the wide range of versions available.

Versions of the SIMOTICS GP/SD VSD10 line motor series: 1LE109, 1LE159

The motors are squirrel-cage induction motors with compact dimensions in a surface-cooled, enclosed version with self-ventilation. They have been specifically designed for converter operation.

1LE109 General Purpose for converter operation

- Four-quadrant operation with a converter, optimally coordinated to the SINAMICS G drive system. Can be operated with SINAMICS S (ALM, SLM) in four-quadrant operation.
- IP55 degree of protection
- IC411 cooling method, self-ventilated (IC416 cooling method, force-ventilated version optional)
- Housing: Aluminum
- Frame sizes 100 to 160

1LE159 Severe Duty for converter operation

- Four-quadrant operation with a converter, optimally coordinated to the SINAMICS G drive system. Can be operated with SINAMICS S (ALM, SLM) in four-quadrant operation.
- IP55 degree of protection
- IC411 cooling method, self-ventilated (IC416 cooling method, force-ventilated version optional)
- Housing: Cast iron
- Frame sizes 100 to 315

Benefits

The SIMOTICS GP/SD VSD10 line series of motors has been specifically developed for operation with SINAMICS G converters.

- Optimizing the assignment of the motor active part to the Power Module results in low capital investment costs.
- The high power density and compact design ensure low space requirements combined with low weight.
- An optimally harmonized drive system is created as the motor is optimally coordinated and harmonized with the converter. For instance, the converter does not have to be derated or there is low temperature rise.
- Optionally, SIMOTICS GP motors with an aluminum housing (frame sizes 100 to 160) or SIMOTICS SD motors with a rugged cast-iron housing (frame sizes 100 to 315) are available.
- High degree of availability based on standard protection functions for converter operation – KTY 84-130 temperature sensors, Pt1000 resistance thermometers (all frame sizes) and NDE insulated bearings (frame sizes 280 and 315).
- As a result of the optimized insulation system, a high degree of reliability is obtained for four-quadrant operation with SINAMICS converters.
- Fast and simple commissioning by transferring a motor code into the converter.

More power ratings

SIMOTICS GP/SD VSD10 line motors are designed as standard for operation with a 50-Hz, 60-Hz, and 87-Hz characteristic (up to frame size 200). No special ordering option is required.

Optimized for converter operation

The new motor series has been optimized for operation with SINAMICS G120, G130, and G150 converters with regard to converter output currents and voltage utilization. Four-quadrant operation is possible without restrictions with the SINAMICS G120 and SINAMICS S120 converter families. The motors can also be operated on other SINAMICS converters (SINAMICS G120P, SINAMICS G120C, SINAMICS G120D).

High degree of flexibility

By consistently utilizing the 1LE1 standard motor platform, almost all options of the 1LE1 line motors can also be used for the SIMOTICS GP/SD VSD10 line series.

Known and established design

Line and converter motors can be easily interchanged due to their identical dimensions and customer interfaces. The connection and operating philosophy is exactly the same as for 1LE1 line motors.

International applications

The motors are not subject to any minimum efficiency requirements for specific countries. As a consequence, they can be operated without additional MEPS certificates, also in the USA, for example.

1) Forced ventilation optionally available.
2) 87 Hz characteristic not available for all frame sizes.
3) Other degrees of protection optionally available.

© Siemens AG 2018

Application

As a result of the wide range of options, the SIMOTICS GP/SD VSD10 line motor series can be deployed in all industrial areas and sectors. Paper, steel, energy, chemical, water/waste water are examples of some typical sectors.

Various flange and foot-mounted designs according to EN 60034-7 are available. IP55 is the standard degree of protection (other degrees of protection optionally available).

The wide field of applications that can be addressed includes, for example, the following:

- Pumps
- Fans
- Compressors
- Cranes
- Conveyor belts

Design

The SIMOTICS GD/SD VSD10 line motors are based on the 1LE1 platform. The principle design of the SIMOTICS GP/SD VSD10 line motors therefore corresponds to the 1LE1 line motors. The mechanical parts are identical. The motors are adapted to the converter by appropriately dimensioning the active part and VSD-specific rating plate data.

Technical specifications

Overview of technical specifications

This table lists the most important technical specifications.

Type of motor	SIMOTICS GP/SD VSD10 line IEC Low-Voltage Motors; three-phase induction motors
Connection types	Star/delta connection The connection used depends on the particular load characteristic.
No. of poles	2, 4
Frame sizes	100 ... 315
Rated power	• 2-pole: 3 … 90 kW (50 Hz characteristic); 3.45 … 101 kW (60 Hz characteristic), 4.5 … 12.5 kW (87 Hz characteristic) • 4-pole: 2.2 … 200 kW (50 Hz characteristic); 2.55 … 230 kW (60 Hz characteristic), 3.7 … 48 kW (87 Hz characteristic)
Frequencies	Characteristics for 50 Hz, 60 Hz and 87 Hz
Versions	Air-cooled, enclosed version • with self ventilation • with forced ventilation (optional) SIMOTICS GP motors in an aluminum version, frame sizes 100 … 160 SIMOTICS SD motors in a cast-iron version, frame sizes 100 … 315
Marking	Only permitted for converter operation. As converter motors, IE classification according to IEC 60034-30-1 is not required.
Rated speed	• 1500 rpm, 1800 rpm (up to frame size 315), and 2610 rpm (up to frame size 200) • 3000 rpm, 3600 rpm (up to frame size 280), and 5220 rpm (up to frame size 112)
Rated torque	9.6 … 1273 Nm (50 Hz characteristic); 9.2 … 1220 Nm (60 Hz characteristic), 8.2 … 176 Nm (87 Hz characteristic)
Insulation of the stator winding in accordance with EN 60034-1 (IEC 60034-1)	Temperature class F Reinforced insulation system (Advanced) up to 440 V motor connection voltage Special insulation system (Premium) up to 480 V motor connection voltage
Degree of protection according to EN 60034-5 (IEC 60034-5)	Standard IP55 optionally IP56 and IP65 Air-cooled, enclosed version;
Cooling according to EN 60034-6 (IEC 60034-6)	• Standard: Self-ventilated (IC411) • Optional: Forced-air cooled (IC416)
Permissible coolant temperature and installation altitude	–20 ... +40 °C as standard, installation altitude up to 1000 m above sea level.
Standard voltages according to EN 60038 (IEC 60038)	50 Hz line supplies: 400 V, 500 V, 690 V 60-Hz supply systems: 460 V, 600 V The rated motor voltage required is listed in the "Selection and ordering data" for the required motor.
Type of construction according to EN 60034-7 (IEC 60034-7)	• Without flange: IM B3, IM B6, IM B7, IM B8, IM V5, IM V6 • With flange: IM B5, IM B35, IM V1, IM V3
Paint finish Suitability of paint finish for climate group according to IEC 60721, Part 2-1	As standard: color RAL 7030 stone gray
Vibration severity grade according to EN 60034-14 (IEC 60034-14)	Grade A (normal)
Shaft extension according to DIN 748 (IEC 60072)	Balancing type: half-key balancing as standard
Sound pressure level according to EN ISO 1680 (tolerance +3 dB)	The sound pressure level is listed in the "Selection and ordering data" for the required motor.
Weights	The weight is listed in the "Selection and ordering data" for the required motor.
Modular mounting concept	Optional pulse encoder, brake, and separately driven fan according to ordering data
Options	See "Article No. supplements and special versions"

© Siemens AG 2018

Technical specifications (continued)

Rating plate

In accordance with EN 60034-1, the approximate total weight is specified on the rating plate. As standard, the rating plate is in English.

For straightforward and fast commissioning with SINAMICS G converters, a motor code number is stamped on the rating plate (CODE). The rated frequencies deviate, depending on the slip, from 50 Hz, 60 Hz, and 87 Hz.

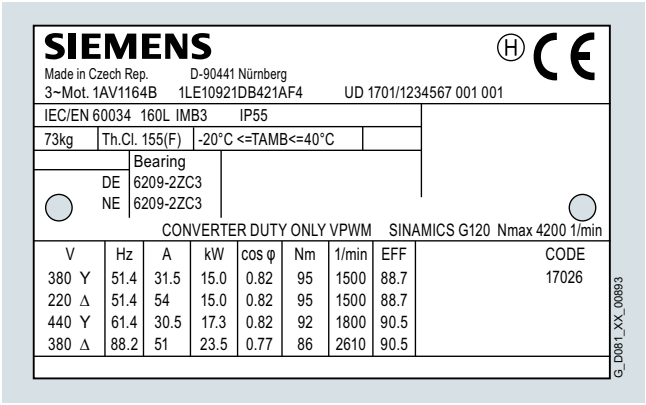

Example of a rating plate for SIMOTICS GP VSD10 line

Motors specially designed for converter operation

These motors have been specifically designed for converter operation. The catalog data apply for operation with Siemens SINAMICS G and SINAMICS S converters.

When operated with an alternative converter, the catalog data apply (thermal torque limits, maximum overload torques), approximately for the following general conditions:

- Minimum rated pulse frequencies:
  - 4 kHz at 400 V, up to 90 kW
  - 2 kHz at 500 V to 690 V, up to 132 kW
  - 1.25 kHz at 500 V to 690 V, 160 and 200 kW
- The converter can provide the rated voltage as listed in the catalog.
- Permissible voltage peaks for reinforced insulation system (Advanced):
  $\hat{U}_{\text{phase-to-phase}} \leq 1600$ V, $\hat{U}_{\text{phase-to-ground}} \leq 1400$ V, $t_s > 0.1$ µs
- Permissible voltage peaks for special insulation system (Premium):
  $\hat{U}_{\text{phase-to-phase}} \leq 2200$ V, $\hat{U}_{\text{phase-to-ground}} \leq 1500$ V, $t_s > 0.1$ µs

For SINAMICS G120 converters (from firmware version 4.7 and higher), the SIMOTICS GP/SD VSD10 line can be selected as the motor category and addressed using the motor code No. in the SINAMICS converter using the STARTER software or at the converter operator panel (Advanced Operator Panel (AOP), Basic Operator Panel (BOP)).

Rated voltage

The tolerance for the rated voltage is in accordance with EN 60034-1. A rated voltage is not specified. The rated motor voltages are selected so that when operated with a SINAMICS G120 converter, the available voltage is optimally utilized.

Insulation

The motors can be operated with line voltages up to 690 V 3 AC with SINAMICS G converters and SINAMICS S converters (uncontrolled and controlled infeed) when maintaining the permissible peak voltages specified above.

Depending on the selected motor connection voltage, a special insulation system is used for converter operation.

- Up to 440 V motor voltage (480 V line voltage) reinforced insulation system (Advanced)
- From 480 V motor voltage (500 V line voltage) special insulation system (Premium)

For converter operation with the power ratings specified in the catalog, the motors can be utilized corresponding to thermal class 155 (F) (service factor 1.0).

Preferred supply system configurations are TT systems and TN systems with neutral-point grounding. In the case of a fault when connected to an IT system (ground fault), the insulation is excessively stressed. In this case, the process should be terminated as quickly as possible ($t < 2$ h), and the fault resolved. We do not recommend operation in corner-grounded TN systems.

Noise

The maximum sound pressure levels should be taken from the selection and ordering data.

© Siemens AG 2018

Technical specifications (continued)

Separately driven fan

For the technical specifications of the separately driven fans, see page 1/80 "Technical specifications of separately driven fans".

Bearings

To prevent bearing current damage, converter motors are equipped with insulated bearing cartridges at the NDE, available as standard for frame sizes 280 and 315.

Insulated NDE bearings are optionally available for frame sizes 225 and 250. We recommend their use depending on the particular plant or system.

For converter operation, as a result of the basic principle employed, electrical bearing stress is created through the bearing lubricant film due to a voltage that is capacitively coupled in.

The physical cause of this is the common-mode voltage at the converter output that is inherent in the control method for a converter:
The sum of the three phase voltages is – in contrast to pure line operation – not equal to zero at every point in time.

In order to apply currents to the motor which are sinusoidal as far as possible (resulting in smoother running, lower oscillation torques, and lower stray losses), a high pulse frequency is required for the converter's output voltage. The related (very steep) switching edges of the converter output voltage (and also, therefore, of the common-mode voltage) cause correspondingly high capacitive currents and voltages on the machine's internal capacitances.

In the worst-case scenario, the capacitive voltage induced via the bearing can lead to random arcing through the bearing lubricating film, thus causing premature bearing aging or damage.

This physical effect, which occurs in isolated cases, has mostly been observed in connection with larger motors.

EMC-compliant installation of the drive system is a basic prerequisite for preventing premature bearing damage via bearing currents.

The most important measures for reducing bearing currents:

- Insulated motor bearing at the NDE
- Use cables with a symmetrical cable cross-section:

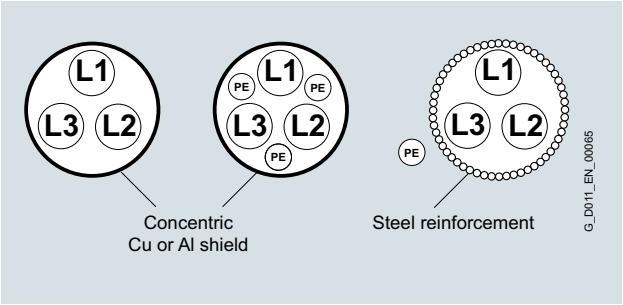

- Preference given to a line supply with isolated neutral point (IT system).
- Using grounding cables with low impedance over a wide frequency range (DC up to approximately 70 MHz): for example, braided copper ribbon cables, HF finely stranded wires.
- Separate HF equipotential-bonding cable between motor housing and driven machine.
- Separate HF equipotential-bonding cable between motor housing and converter PE busbar.
- 360° HF contacting of the cable shield on the motor housing and the converter PE busbar. This can be achieved using EMC screwed glands on the motor side and EMC shield clips on the converter side, for example.

© Siemens AG 2018

Technical specifications (continued)

Torque limits (continuous duty)

The thermal torque limit characteristics of the SIMOTICS GP/SD VSD10 line define the maximum load torque for uninterrupted duty (S1) over the complete speed control range. The characteristics are different for all of the cooling methods. The speed control range is limited by the mechanical speed limit, which depends on the motor's mechanical design.

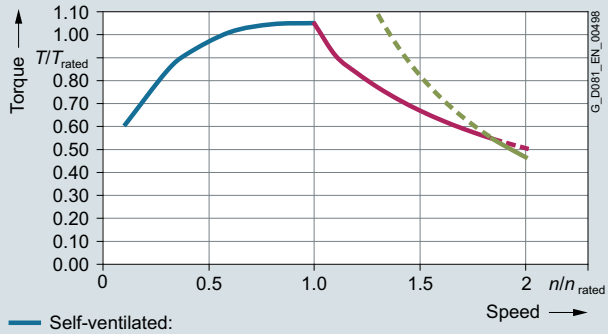

Torque limit characteristic for SIMOTICS GP/SD VSD10 line, self-ventilated

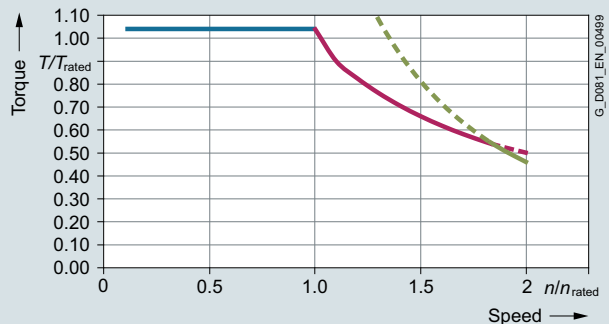

Torque limit characteristic for SIMOTICS GP/SD VSD10 line, forced-air cooled

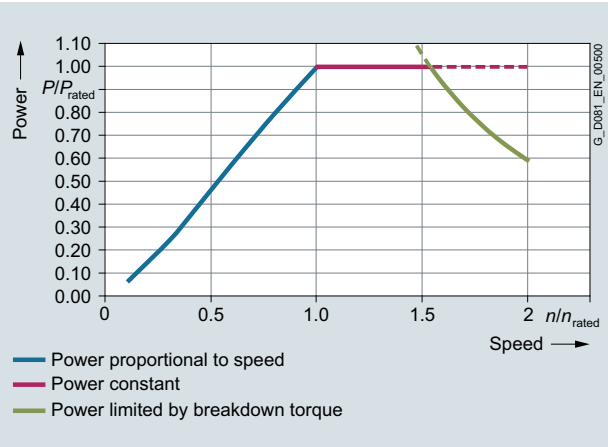

Power limit for SIMOTICS GP/SD VSD10 line, self-ventilated

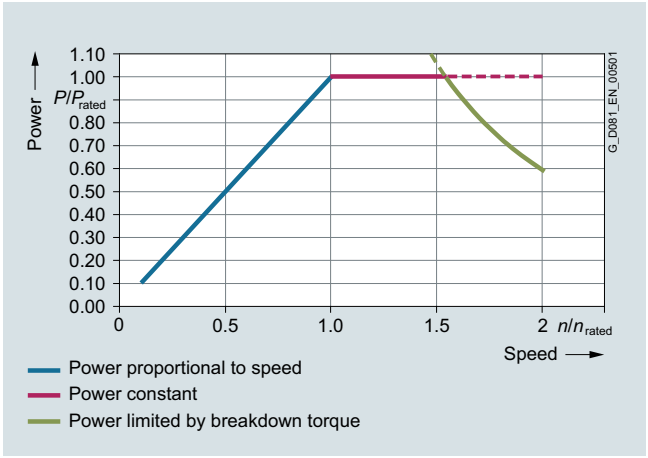

Power limit for SIMOTICS GP/SD VSD10 line, forced-air cooled

Maximum overload torques

The maximum overload torque output from the motor is defined by the overload torque characteristic over the complete speed control range. The reference variable is the breakdown torque at rated speed. The breakdown torque is calculated from the breakdown torque ratio and the rated torque. Operation at the maximum overload torque is only briefly permissible, for instance, when accelerating. The speed control range is limited by the mechanical speed limit, which depends on the motor's mechanical design.

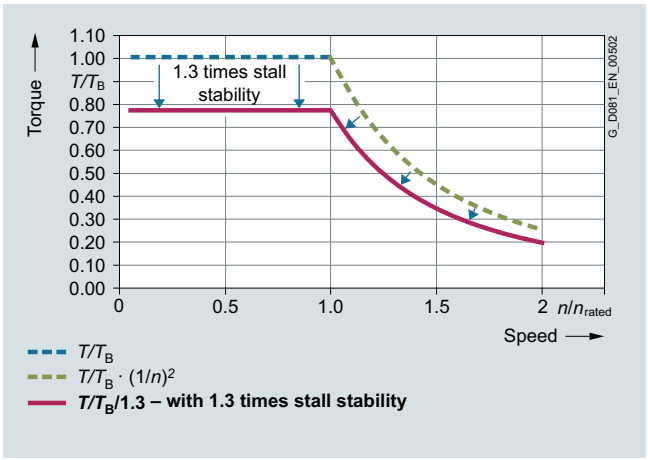

Overload torque characteristic for SIMOTICS GP/SD VSD10 line

© Siemens AG 2018

Technical specifications (continued)

Additional information

Mechanical stress and grease lifetime

When motors are operated at speeds above the rated speed, the mechanical smooth running operation and the bearings are subjected to greater mechanical stress. This reduces the grease lifetime and the bearing lifetime.

Above 100 Hz, the motors must be balanced for twice the rated frequency.

Motor protection

A motor protection function can be implemented using the I^2t sensing function implemented in the converter software. If required, more precise motor protection can be afforded by direct temperature measurement using KTY84 sensors, PTC thermistors, or Pt100/1000 resistance thermometers in the motor winding. Some converters from Siemens determine the motor temperature using the resistance of the temperature sensor. They can be set to a required temperature for alarm and tripping. When ordering PTC thermistors, Pt100 resistance thermistors or other temperature sensors to monitor the cooling temperature, the KTY84 sensors, otherwise provided as standard, are omitted. As described above, KTY84 sensors are evaluated in the SINAMICS converters.

Motor connection

When connecting the motors, it is important to consider the restrictions for 1LE1 line motors as well as the maximum conductor cross-sections permitted for the converter.

Operating data for 50 Hz/60 Hz/87 Hz characteristics

SIMOTICS GP/SD VSD10 line motors are designed for operation with 50-Hz, 60-Hz and 87-Hz characteristics (87-Hz characteristic up to frame size 200).

Operation with the 50-/60-Hz characteristic requires Y (star or wye) connection; operation with the 87-Hz characteristic requires Δ connection.

The corresponding power data are stamped on the rating plate as standard. An ordering option is not required.

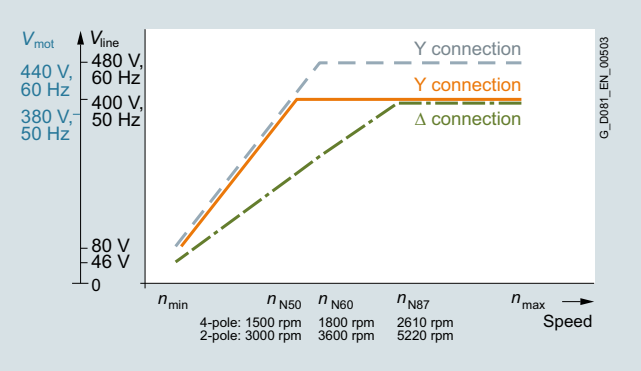

Operating characteristics of SIMOTICS GP/SD VSD10 line motors

Maximum operating speed

The maximum operating speed is limited by the mechanical speed limit of the motors as well as the available converter output frequency.

A significant increase in the sound pressure level can be expected when operating the motor above its rated speed (field weakening range).

Mechanical speed limits SIMOTICS GP/SD VSD10 line:

Frame size	Mechanical speed limits for 1LE1.92 motors	
	2-pole	4-pole
	n_{max} rpm	n_{max} rpm
100	5500	4200
112	5500	4200
132	4500	4200
160	4500	4200
180	4500	4200
200	4500	4200
225	4500	4500
250	3900	3700
280	3600	3000
315	–	2600

International use:

As special converter motors, SIMOTICS GP/SD VSD10 line motors are presently not subject to any minimum efficiency requirements in the EU and USA/Canada. However, other national certificates may be required (e.g. CSA-S safety in Canada).

Therefore, for use in USA, Canada and Mexico, we recommend:

Ordering with order code **D39** (version according to UL and CSA-S).

Note:

At the present time, national Chinese regulations regarding converter motors are being revised. A conclusive interpretation relating to the design still cannot be made. As a consequence, until further notice, for China we recommend that line motors suitable for converter operation are used with CEL (China Energy Label) (e.g. 1LE100. with order code **D34**)

© Siemens AG 2018

Technical specifications (continued)

Load characteristics for the line supply voltage: 3 AC 50 Hz 400 V

Rated speed 3000 rpm

Load characteristic $T \sim n^2$	T = const. Speed control range from 1500 rpm 1 : 2	from 750 rpm 1 : 4	from 300 rpm 1 : 10	SIMOTICS GP/SD VSD10 line motors	SINAMICS G120 converters
P_{max}	P_{max}	P_{max}	P_{max}		
kW	kW	kW	kW	Motor type	Converter type
3	1.47	0.63	0.21	1LE1.92-1AA42-1...	6SL3210-1PE18-0.L1
4	1.97	0.84	0.27	1LE1.92-1BA22-1...	6SL3210-1PE21-1.L0
5.5	2.69	1.17	0.39	1LE1.92-1CA02-1...	6SL3210-1PE21-4.L0
7.5	3.64	1.59	0.54	1LE1.92-1CA12-1...	6SL3210-1PE21-8.L0
11	5.38	2.34	0.79	1LE1.92-1DA22-1...	6SL3210-1PE22-7.L0
15	7.33	3.19	1.08	1LE1.92-1DA32-1...	6SL3210-1PE23-3.L0
18.5	9.05	3.93	1.32	1LE1.92-1DA42-1...	6SL3210-1PE23-8.L0
22	10.77	4.69	1.59	1LE1592-1EA22-1...	6SL3210-1PE24-5.L0
30	14.64	6.37	2.13	1LE1592-2AA42-1...	6SL3210-1PE26-0.L0
37	18.08	7.86	2.66	1LE1592-2AA52-1...	6SL3210-1PE27-5.L0
45	21.99	9.54	3.21	1LE1592-2BA22-1...	6SL3210-1PE28-8.L0
55	26.86	11.65	3.91	1LE1592-2CA22-1...	6SL3210-1PE31-1.L0
75	36.63	15.85	5.33	1LE1592-2DA02-1...	6SL3210-1PE31-5.L0
90	43.91	19.00	6.38	1LE1592-2DA22-1...	6SL3210-1PE31-8.L0

Rated speed 1500 rpm

Load characteristic $T \sim n^2$	T = const. Speed control range from 750 rpm 1:2	from 375 rpm 1:4	from 150 rpm 1:10	SIMOTICS GP/SD VSD10 line motors	SINAMICS converters
P_{max}	P_{max}	P_{max}	P_{max}		
kW	kW	kW	kW	Motor type	Converter type
2.2	1.06	0.43	0.13	1LE1.92-1AB42-1...	6SL3210-1PE16-1.L1
3	1.45	0.59	0.18	1LE1.92-1AB52-1...	6SL3210-1PE18-0.L1
4	1.93	0.78	0.24	1LE1.92-1BB22-1...	6SL3210-1PE21-1.L0
5.5	2.65	1.07	0.33	1LE1.92-1CB02-1...	6SL3210-1PE21-4.L0
7.5	3.60	1.45	0.45	1LE1.92-1CB22-1...	6SL3210-1PE21-8.L0
11	5.31	2.14	0.66	1LE1.92-1DB22-1...	6SL3210-1PE22-7.L0
15	7.20	2.91	0.90	1LE1.92-1DB42-1...	6SL3210-1PE23-3.L0
18.5	8.94	3.61	1.11	1LE1592-1EB22-1...	6SL3210-1PE23-8.L0
22	10.61	4.29	1.32	1LE1592-1EB42-1...	6SL3210-1PE24-5.L0
30	14.48	5.85	1.80	1LE1592-2AB52-1...	6SL3210-1PE26-0.L0
37	17.89	7.23	2.22	1LE1592-2BB02-1...	6SL3210-1PE27-5.L0
45	21.68	8.76	2.70	1LE1592-2BB22-1...	6SL3210-1PE28-8.L0
55	26.53	10.72	3.30	1LE1592-2CB22-1...	6SL3210-1PE31-1.L0
75	36.15	14.61	4.50	1LE1592-2DB02-1...	6SL3210-1PE31-5.L0
90	43.43	17.55	5.40	1LE1592-2DB22-1...	6SL3210-1PE31-8.L0
106	53.05	21.44	6.60	1LE1592-3AB02-1...	6SL3210-1PE32-1.L0
130	63.66	25.73	7.92	1LE1592-3AB22-1...	6SL3210-1PE32-5.L0
160	77.23	31.21	9.60	1LE1592-3AB42-1...	6SL3224-0XE41-3.A0
200	96.48	38.99	12.00	1LE1592-3AB52-1...	6SL3224-0XE41-6.A0

Note:

The converter recommendation applies to standard ambient conditions (40 °C; 1000 m above sea level).

If, as a result of different ambient conditions, the rated motor power is significantly reduced, under certain circumstances, another converter is the optimum solution. Here, please use the configuration options for converters in the DT Configurator.

© Siemens AG 2018

Technical specifications (continued)

SIMOTICS GP/SD VSD10 line standard motors for converter operation with converter SINAMICS G120 Power Modules PM240-2

Rated power	SIMOTICS GP/SD VSD10 1LE109/1LE159	Frame size	SINAMICS G120 Power Module PM240-2	Pulse frequency	Frame size	System power loss, relative $P_{V,rel}$ as a % referred to P_{rated}								IES class acc. to EN 50598-2
						Operating points								
						at partial load [1]							at rated load [1]	
						0/25	0/50	0/100	50/25	50/50	50/100	100/50	100/100	
kW	Type		Type	kHz		%	%	%	%	%	%	%	%	
Line voltage 400 V 3 AC, 50/60 Hz, rated speed 3000 rpm														
3	1LE1.92-1AA42-1...	100 L	6SL3210-1PE18-0.L1	4	FSA	3.433	6.367	17.333	5.4	8.533	21.433	13.567	27.833	IES 1
4	1LE1.92-1BA22-1...	112 M	6SL3210-1PE21-1.L0	4	FSB	3.775	5.8	14.35	5.65	8.025	17.6	13.375	24.45	IES 1
5.5	1LE1.92-1CA02-1...	132 S	6SL3210-1PE21-4.L0	4	FSB	3.109	5.218	13.836	4.109	6.564	16.6	10.309	21.6	IES 1
7.5	1LE1.92-1CA12-1...	132 S	6SL3210-1PE21-8.L0	4	FSB	2.56	4.333	11.587	3.653	5.693	13.84	9.093	18.533	IES 2
11	1LE1.92-1DA22-1...	160 M	6SL3210-1PE22-7.L0	4	FSC	2.664	4.364	11.2	3.973	5.936	13.845	10.255	19.555	IES 1
15	1LE1.92-1DA32-1...	160 M	6SL3210-1PE23-3.L0	4	FSC	1.96	3.68	10.227	3.153	5.04	12.693	8.547	17.4	IES 1
18.5	1LE1592-1DA42-1...	160 L	6SL3210-1PE23-8.L0	4	FSD	2.308	3.649	8.854	3.53	5.022	10.865	8.059	15.07	IES 2
22	1LE1592-1EA22-1...	180 M	6SL3210-1PE24-5.L0	4	FSD	1.695	3.027	8.345	2.586	4.073	9.741	6.482	13.255	IES 2
30	1LE1592-2AA42-1...	200 L	6SL3210-1PE26-0.L0	4	FSD	1.33	2.703	7.327	2.233	3.737	8.88	6.233	12.797	IES 2
37	1LE1592-2AA52-1...	200 L	6SL3210-1PE27-5.L0	4	FSD	1.276	2.3	6.238	2.108	3.276	7.611	5.257	10.678	IES 2
45	1LE1592-2BA22-1...	225 M	6SL3210-1PE28-8.L0	4	FSE	1.127	2.093	5.749	2.044	3.144	7.016	5.538	10.471	IES 2
55	1LE1592-2CA22-1...	250 M	6SL3210-1PE31-1.L0	4	FSE	1.056	1.991	5.467	1.869	2.945	6.771	5.396	10.253	IES 2
75	1LE1592-2DA02-1...	280 S	6SL3210-1PE31-5.L0	4	FSF	1.064	1.847	4.784	2.064	2.971	6.207	5.564	9.799	IES 2
90	1LE1592-2DA22-1...	280 M	6SL3210-1PE31-8.L0	4	FSF	0.932	1.643	4.241	1.696	2.527	5.473	4.523	8.412	IES 2
Line voltage 400 V 3 AC, 50/60 Hz, rated speed 1500 rpm														
2.2	1LE1.92-1AB42-1...	100 L	6SL3210-1PE16-1.L1	4	FSA	5.273	8.273	19.273	6.682	10.364	27.682	14.364	32.091	IES 1
3	1LE1.92-1AB52-1...	100 L	6SL3210-1PE18-0.L1	4	FSA	4.433	7.233	16.4	5.867	9	22.367	12.433	27	IES 1
4	1LE1.92-1BB22-1...	112 M	6SL3210-1PE21-1.L0	4	FSB	4.45	6.9	16.1	5.675	8.425	20.025	11.5	24.3	IES 1
5.5	1LE1.92-1CB02-1...	132 S	6SL3210-1PE21-4.L0	4	FSB	3.618	6	15.618	4.764	7.455	18.818	10.545	23.036	IES 1
7.5	1LE1.92-1CB22-1...	132 M	6SL3210-1PE21-8.L0	4	FSB	3.413	5.24	12.533	4.787	6.84	15.24	10.013	19.733	IES 1
11	1LE1.92-1DB22-1...	160 M	6SL3210-1PE22-7.L0	4	FSC	3.255	4.918	11.445	4.482	6.355	13.936	9.418	18.336	IES 1
15	1LE1.92-1DB42-1...	160 L	6SL3210-1PE23-3.L0	4	FSC	2.94	4.387	10.073	4.013	5.627	12.06	8.14	15.8	IES 2
18.5	1LE1592-1EB22-1...	180 M	6SL3210-1PE23-8.L0	4	FSD	2.205	3.665	9.092	3.465	5.076	11.292	7.514	14.843	IES 2
22	1LE1592-1EB42-1...	180 L	6SL3210-1PE24-5.L0	4	FSD	2.232	3.527	8.5	3.1	4.545	10.145	6.15	12.841	IES 2
30	1LE1592-2AB52-1...	200 L	6SL3210-1PE26-0.L0	4	FSD	1.99	3.167	7.903	2.877	4.197	9.32	6.06	12.26	IES 2
37	1LE1592-2BB02-1...	225 S	6SL3210-1PE27-5.L0	4	FSD	1.53	2.635	6.938	2.551	3.797	8.568	6.051	11.924	IES 2
45	1LE1592-2BB22-1...	225 M	6SL3210-1PE28-8.L0	4	FSE	1.413	2.493	6.644	2.291	3.504	8.053	5.447	10.982	IES 2
55	1LE1592-2CB22-1...	250 M	6SL3210-1PE31-1.L0	4	FSE	1.298	2.427	7.129	2.104	3.36	8.082	5.3	11.051	IES 2
75	1LE1592-2DB02-1...	280 S	6SL3210-1PE31-5.L0	4	FSF	1.317	2.135	5.216	2.441	3.373	6.811	5.909	10.315	IES 2
90	1LE1592-2DB22-1...	280 M	6SL3210-1PE31-8.L0	4	FSF	1.224	2.033	5.132	2.002	2.92	6.357	4.579	8.95	IES 2
106	1LE1592-3AB02-1...	315 S	6SL3210-1PE32-1.L0	2	FSF	1.021	1.711	4.398	1.959	2.765	5.781	4.811	8.863	IES 2
130	1LE1592-3AB22-1...	315 M	6SL3210-1PE32-5.L0	2	FSF	0.947	1.543	3.828	1.754	2.468	5.094	4.256	7.9	IES 2
160	1LE1592-3AB42-1...	315 L	6SL3224-0XE41-3.A0	2	FSGX	1.343	1.981	4.441	2.224	2.974	5.771	4.762	8.614	IES 2
200	1LE1592-3AB52-1...	315 L	6SL3224-0XE41-6.A0	2	FSGX	1.149	1.879	4.737	1.871	2.703	5.838	4.154	8.251	IES 2

[1] Output frequency, rel. [%] referred to the rated speed/ Torque, rel. [%] referred to the rated torque T_{rated}.

© Siemens AG 2018

Article number code

Selection and ordering data

The article number consists of a combination of digits and letters and is divided into three hyphenated blocks to provide a better overview, e.g.:
1LE1592-1DB42-1GF4-Z
H00

The first block (positions 1 to 7) identifies the motor type. The second block (positions 8 to 12) defines the motor frame size and length, the number of poles and in some cases the frequency/voltage. In the third block (positions 13 to 16), the frequency/voltage, type of construction and further design features are encoded.

For deviations in the second and third block from the catalog codes either **Z** or **90** should be used as appropriate.

Ordering data:

- Complete Article No. and order code(s) or plain text
- If a quotation has been requested, please specify the quotation number in addition to the Article No.
- When ordering a complete motor as a spare part, please specify the works serial No. for the previously supplied motor as well as the Article No.

Structure of the Article No.:		Position:	1	2	3	4	5	6	7	-	8	9	10	11	12	-	13	14	15	16	
1st to 4th position: Digit, letter, letter, digit	Self-ventilated by fan mounted on and driven by the rotor		**1**	**L**	**E**	**1**															
5th position: Digit	SIMOTICS GP – aluminum housing						**0**														
	SIMOTICS SD – cast-iron housing						**5**														
6th position: Digit	VSD10 line motor (motor for converter operation)							**9**													
7th position: Digit	Standard efficiency class								**2**												
8th and 9th position: Digit, letter	**Motor frame size** (frame size as a combination of shaft height and overall length, encoded)										**1** ... **3**	**A** ... **D**									
10th position: Letter	**No. of poles**																				
	A: 2-pole												**A**								
	B: 4-pole												**B**								
11th position: Digit	**Laminated core length**													**0** **1** **2** **3** **4** **5**							
12th and 13th position: 2 digits	**Voltage and frequency** [1]																				
	380 V 3 AC, 50 Hz/440 V 3 AC, 60 Hz/380 V 3 AC, 87Hz														**2** **2**		**1** **6**				
	480 V 3 AC, 50 Hz/550 V 3 AC, 60 Hz/480 V 3 AC, 87Hz														**3** **9**		**3** **0**				
	660 V 3 AC, 50 Hz/660 V 3 AC, 87 Hz																				
	Non-standard winding, requires order code M.. (e.g. M1Y)																				
14th position: Letter	**Type of construction** (encoded with A ... V)																	**A** ... **V**			
15th position: Letter	**Motor protection** (encoded with B ... Z; Z requires order code Q.. (e.g. Q3A); F = standard version with integrated KTY 84 temperature sensor)																		**B** ... **Z**		
16th position: Digit	**Terminal box position** 4: Terminal box top (normal version), 5: Terminal box right, 6: Terminal box left																			**4** ... **6**	
	Special order versions: encoded – additional short code required not encoded – additional plain text required																				**- Z**

[1] Depending on slip, the rated frequency is above 50 Hz, 60 Hz or 87 Hz (see Technical specifications).

© Siemens AG 2018

Selection and ordering data (continued)

Ordering example:

Selection criteria	Requirement	Structure of the Article No.
Motor type 1LE1	Standard motor for converter operation SIMOTICS GP VSD10 line, aluminum version	**1LE1092-■■■■■-■■■■**
Motor frame size	160 L	**1LE1092-1DB■■-■■■■**
No. of poles	4-pole	**1LE1092-1DB4■-■■■■**
Rated power	$P_{rated\ 50}$: 15 kW $P_{rated\ 60}$: 17.3 kW $P_{rated\ 87}$: 23.5 kW	
Voltage and frequency	380 V 3 AC, 50 Hz/440 V 3 AC, 60 Hz/380 V 3 AC, 87Hz	**1LE1092-1DB42-1■■■**
Type of construction with special version	IM V5 with protective cover [1]	**1LE1092-1DB42-1C■■-Z** **H00**
Motor protection	Motor protection with PTC thermistors with 1 or 3 embedded temperature sensors for tripping	**1LE1092-1DB42-1CB■-Z** **H00**
Terminal box position	Terminal box right (viewed from DE)	**1LE1092-1DB42-1CB5-Z** **H00**

[1] Standard without protective cover – the protective cover is defined with order code **H00** and must be ordered in addition to the Article No. with **-Z** and this order code.

© Siemens AG 2018

Self-ventilated, enclosed motors – line voltage 400 V, 50 Hz/460 V, 60 Hz/400 V, 87 Hz

Selection and ordering data

P_{rated} 50 Hz, 400 V	P_{rated} 60 Hz, 460 V	P_{rated} 87 Hz, 400 V	Frame size	Connection	Operating values at rated power f_{rated}	T_{rated}	$\eta_{rated, 4/4}$ for converter operation	$\cos\varphi_{rated, 4/4}$	I_{rated}	1LE1092 aluminum series Version specifically for converter operation
kW	kW	kW			Hz	Nm	%		A	Article No.
• Insulation: Thermal class 155 (temperature class F), IP55 degree of protection, utilization in accordance with thermal class 155 (temperature class F)										
• Operation with a SINAMICS G converter with uncontrolled infeed – rated motor voltage 380 V, 50 Hz/440 V, 60 Hz/380 V, 87 Hz										
3000 rpm	3600 rpm	5220 rpm	2-pole							
3			**100 L**	Y	52.9	9.6	81.5	0.87	6.4	**1LE1092-1AA42-1■■■**
	3.45			Y	62.8	9.2	84.5	0.88	6.1	
		4.5		Δ	89.4	8.2	84.5	0.82	9.9	
4			**112 M**	Y	51.2	12.7	83.1	0.86	8.5	**1LE1092-1BA22-1■■■**
	4.55			Y	61.2	12.1	84.5	0.88	8	
		6.6		Δ	88.2	12.1	84.5	0.83	14.2	
5.5			**132 S**	Y	51.4	17.5	84.7	0.89	11.1	**1LE1092-1CA02-1■■■**
	6.3			Y	61.4	16.7	86.0	0.90	10.7	
7.5			**132 S**	Y	51.2	23.9	86.0	0.87	15.2	**1LE1092-1CA12-1■■■**
	8.6			Y	61.2	22.8	88.7	0.88	14.7	
11			**160 M**	Y	51.3	35.0	87.6	0.85	22.5	**1LE1092-1DA22-1■■■**
	12.6			Y	61.2	33.4	87.5	0.86	22	
15			**160 M**	Y	51.4	47.8	88.7	0.84	30.5	**1LE1092-1DA32-1■■■**
	17.3			Y	61.4	45.9	89.5	0.86	29.5	
18.5			**160 L**	Y	51.1	58.9	89.3	0.86	36.5	**1LE1092-1DA42-1■■■**
	21.3			Y	61.1	56.5	89.5	0.87	36	
1500 rpm	1800 rpm	2610 rpm	4-pole							
2.2			**100 L**	Y	52.9	14.0	79.7	0.81	5.2	**1LE1092-1AB42-1■■■**
	2.55			Y	62.8	13.5	83.0	0.82	4.9	
		3.7		Δ	89.3	13.5	83.0	0.79	8.6	
3			**100 L**	Y	52.7	19.1	81.5	0.85	6.6	**1LE1092-1AB52-1■■■**
	3.45			Y	62.6	18.3	85.0	0.86	6.2	
		5		Δ	89.3	18.3	85.0	0.79	11.3	
4			**112 M**	Y	52.3	25.5	83.1	0.85	8.6	**1LE1092-1BB22-1■■■**
	4.55			Y	62.2	24.0	85.0	0.85	8.3	
		6.6		Δ	89.0	24.0	85.0	0.81	14.6	
5.5			**132 S**	Y	52.1	35.0	84.7	0.82	12	**1LE1092-1CB02-1■■■**
	6.3			Y	62.0	33.5	87.0	0.84	11.3	
		9		Δ	88.8	33.0	87.0	0.81	19.4	
7.5			**132 M**	Y	51.7	47.5	86.0	0.82	16.2	**1LE1092-1CB22-1■■■**
	8.6			Y	61.7	45.5	87.5	0.84	15.4	
		12.5		Δ	88.8	45.5	87.5	0.80	27.1	
11			**160 M**	Y	51.5	70.0	87.6	0.82	23.5	**1LE1092-1DB22-1■■■**
	12.6			Y	61.4	67.0	88.5	0.82	23	
		17		Δ	88.3	62.0	88.5	0.78	37.5	
15			**160 L**	Y	51.4	95.0	88.7	0.82	31.5	**1LE1092-1DB42-1■■■**
	17.3			Y	61.4	92.0	90.5	0.82	30.5	
		23.5		Δ	88.2	86.0	90.5	0.77	51	

For versions, see Article No. supplements and special versions. ■■■

All technical specifications refer to converter operation.

© Siemens AG 2018

Motor type	$m_{IM\ B3}$	J	L_{pfA}, tolerance +3 dB(A) load	L_{WA}, tolerance +3 dB(A) load	Mech. speed limit	Terminal box	**Preferred SINAMICS G120 – PM240(-2)** Other SINAMICS converters also possible Operating mode: Low overload	Frame size	IES class acc. to EN 50598-2
	kg	kgm^2	dB(A)	dB(A)	rpm		Type [1]		
1LE1092-1AA42-1...	20	0.0034	79.0	91.1	5500	TB1F00	6SL3210-1PE18-0.L1	FSA	IES 1
	20	0.0034	79.0	91.1	5500		6SL3210-1PE18-0.L1	FSA	IES 1
	20	0.0034	83.0	95.1	5500		6SL3210-1PE21-4.L0	FSB	IES 1
1LE1092-1BA22-1...	25	0.0067	78.0	90.1	5500	TB1F00	6SL3210-1PE21-1.L0	FSB	IES 1
	25	0.0067	78.0	90.1	5500		6SL3210-1PE21-1.L0	FSB	IES 1
	25	0.0067	83.0	95.2	5500		6SL3210-1PE21-8.L0	FSB	IES 1
1LE1092-1CA02-1...	35	0.013	76.0	88.3	4500	TB1F00	6SL3210-1PE21-4.L0	FSB	IES 1
	35	0.013	76.0	88.3	4500		6SL3210-1PE21-4.L0	FSB	IES 1
1LE1092-1CA12-1...	40	0.016	76.0	88.4	4500	TB1H00	6SL3210-1PE21-8.L0	FSB	IES 2
	40	0.016	76.0	88.4	4500		6SL3210-1PE21-8.L0	FSB	IES 2
1LE1092-1DA22-1...	60	0.03	79.0	91.4	4500	TB1H00	6SL3210-1PE22-7.L0	FSC	IES 1
	60	0.03	78.0	90.4	4500		6SL3210-1PE22-7.L0	FSC	IES 1
1LE1092-1DA32-1...	68	0.036	79.0	91.8	4500	TB1J00	6SL3210-1PE23-3.L0	FSC	IES 1
	68	0.036	78.0	90.8	4500		6SL3210-1PE23-3.L0	FSC	IES 1
1LE1092-1DA42-1...	78	0.044	79.0	91.8	4500	TB1J00	6SL3210-1PE23-8.L0	FSD	IES 2
	78	0.044	78.0	90.8	4500		6SL3210-1PE23-8.L0	FSD	IES 2
1LE1092-1AB42-1...	15	0.0059	79.0	91.0	4200	TB1F00	6SL3210-1PE16-1.L1	FSA	IES 1
	15	0.0059	79.0	91.0	4200		6SL3210-1PE16-1.L1	FSA	IES 1
	15	0.0059	81.0	93.0	4200		6SL3210-1PE21-1.L0	FSB	IES 1
1LE1092-1AB52-1...	21	0.0078	79.0	91.0	4200	TB1F00	6SL3210-1PE18-0.L1	FSA	IES 1
	21	0.0078	79.0	91.0	4200		6SL3210-1PE18-0.L1	FSA	IES 1
	21	0.0078	81.0	93.0	4200		6SL3210-1PE21-4.L0	FSB	IES 1
1LE1092-1BB22-1...	27	0.01	77.4	89.4	4200	TB1F00	6SL3210-1PE21-1.L0	FSB	IES 1
	27	0.01	77.2	89.2	4200		6SL3210-1PE21-1.L0	FSB	IES 1
	27	0.01	78.4	90.4	4200		6SL3210-1PE21-8.L0	FSB	IES 1
1LE1092-1CB02-1...	39	0.019	76.0	88.0	4200	TB1H00	6SL3210-1PE21-4.L0	FSB	IES 1
	39	0.019	76.0	88.0	4200		6SL3210-1PE21-4.L0	FSB	IES 1
	39	0.019	83.0	95.0	4200		6SL3210-1PE22-7.L0	FSC	IES 1
1LE1092-1CB22-1...	43	0.024	76.0	88.0	4200	TB1H00	6SL3210-1PE21-8.L0	FSB	IES 1
	43	0.024	76.0	88.0	4200		6SL3210-1PE21-8.L0	FSB	IES 1
	43	0.024	83.0	95.0	4200		6SL3210-1PE23-3.L0	FSC	IES 1
1LE1092-1DB22-1...	67	0.044	83.5	95.5	4200	TB1J00	6SL3210-1PE22-7.L0	FSC	IES 1
	67	0.044	82.3	94.3	4200		6SL3210-1PE22-7.L0	FSC	IES 1
	67	0.044	85.8	97.8	4200		6SL3210-1PE24-5.L0	FSD	IES 1
1LE1092-1DB42-1...	75	0.056	83.5	95.5	4200	TB1J00	6SL3210-1PE23-3.L0	FSC	IES 2
	75	0.056	82.3	94.3	4200		6SL3210-1PE23-3.L0	FSC	IES 2
	75	0.056	85.8	97.8	4200		6SL3210-1PE26-0.L0	FSD	IES 2

[1] In addition to the Power Module, a Control Unit and an Operator Panel are required (see Catalog D 31 and/or D 35).

© Siemens AG 2018

Self-ventilated, enclosed motors – line voltage 500 V, 50 Hz/575 V, 60 Hz/500 V, 87 Hz

Selection and ordering data

P_{rated} 50 Hz, 500 V	P_{rated} 60 Hz, 575 V	P_{rated} 87 Hz, 500 V	Frame size	Connection	Operating values at rated power f_{rated}	T_{rated}	$\eta_{rated, 4/4}$ for converter operation	$\cos\varphi_{rated, 4/4}$	I_{rated}	1LE1092 aluminum series Version specifically for converter operation
kW	kW	kW			Hz	Nm	%		A	Article No.
• Insulation: Thermal class 155 (temperature class F), IP55 degree of protection, utilization in accordance with thermal class 155 (temperature class F)										
• Operation with a SINAMICS G converter with uncontrolled infeed – rated motor voltage 480 V, 50 Hz/550 V, 60 Hz/480 V, 87 Hz										
3000 rpm	3600 rpm	5220 rpm	2-pole							
3			100 L	Y	52.9	9.6	81.5	0.87	5.1	1LE1092-1AA42-6■■■
	3.45			Y	63.0	9.2	84.5	0.88	4.85	
		5		Δ	89.6	9.1	84.5	0.85	8.4	
4			112 M	Y	51.3	12.7	83.1	0.86	6.7	1LE1092-1BA22-6■■■
	4.55			Y	61.3	12.1	84.5	0.88	6.4	
		6.6		Δ	88.2	12.1	84.5	0.84	11.1	
5.5			132 S	Y	51.6	17.5	84.7	0.89	8.8	1LE1092-1CA02-6■■■
	6.3			Y	61.6	16.7	86.0	0.90	8.5	
7.5			132 S	Y	51.2	23.9	86.0	0.87	12.1	1LE1092-1CA12-6■■■
	8.6			Y	61.2	22.8	88.7	0.88	11.7	
11.0			160 M	Y	51.3	35.0	87.6	0.85	17.8	1LE1092-1DA22-6■■■
	12.6			Y	61.3	33.4	87.5	0.86	17.6	
14			160 M	Y	51.1	44.6	88.7	0.84	22.5	1LE1092-1DA32-6■■■
	16.5			Y	61.2	43.8	89.5	0.86	22.5	
17			160 L	Y	51.1	54.1	89.3	0.85	27	1LE1092-1DA42-6■■■
	19.5			Y	61.1	51.7	89.5	0.86	26.5	
1500 rpm	1800 rpm	2610 rpm	4-pole							
2.2			100 L	Y	52.8	14.0	79.7	0.81	4.1	1LE1092-1AB42-6■■■
	2.55			Y	62.8	13.5	83.0	0.82	3.95	
		3.7		Δ	89.6	13.5	83.0	0.79	6.8	
3			100 L	Y	52.6	19.1	81.5	0.85	5.2	1LE1092-1AB52-6■■■
	3.45			Y	62.6	18.3	85.0	0.86	4.95	
		5		Δ	89.3	18.3	85.0	0.79	8.7	
4			112 M	Y	52.4	25.5	83.1	0.85	6.8	1LE1092-1BB22-6■■■
	4.55			Y	62.3	24.1	85.0	0.85	6.6	
		6.6		Δ	89.1	24.1	85.0	0.81	12	
5.5			132 S	Y	52.0	35.0	84.7	0.82	9.5	1LE1092-1CB02-6■■■
	6.3			Y	62.0	33.4	87.0	0.84	9	
		9		Δ	88.8	32.9	87.0	0.81	15.4	
7.5			132 M	Y	51.9	47.8	86.0	0.82	12.8	1LE1092-1CB22-6■■■
	8.6			Y	61.9	45.6	87.5	0.84	12.3	
		12.5		Δ	88.7	45.7	87.5	0.80	21.5	
11			160 M	Y	51.5	70.0	87.6	0.82	18.4	1LE1092-1DB22-6■■■
	12.6			Y	61.5	66.9	88.5	0.82	18.2	
		17		Δ	88.4	62.2	88.5	0.78	29.5	
13.5			160 L	Y	51.2	86.0	88.7	0.79	23	1LE1092-1DB42-6■■■
	15.6			Y	61.2	82.8	90.5	0.81	22.5	
		23.5		Δ	88.3	86.0	90.5	0.77	40.5	

For versions, see Article No. supplements and special versions. ■■■

All technical specifications refer to converter operation.

© Siemens AG 2018

Motor type	$m_{IM\ B3}$	J	L_{pfA}, tolerance +3 dB(A) load	L_{WA}, tolerance +3 dB(A) load	Mech. speed limit	Terminal box	**Preferred SINAMICS G120 – PM240(-2)** Other SINAMICS converters also possible Operating mode: Low overload	Frame size	IES class acc. to EN 50598-2
	kg	kgm^2	dB(A)	dB(A)	rpm		Type [1]		
1LE1092-1AA42-6...	20	0.0034	80.0	92.1	5500	TB1F00			
	20	0.0034	80.0	92.1	5500				
	20	0.0034	85.0	92.1	5500				
1LE1092-1BA22-6...	25	0.0067	79.0	91.1	5500	TB1F00			
	25	0.0067	79.0	91.1	5500				
	25	0.0067	85.0	91.1	5500		6SL3210-1PH21-4.L0	FSD	
1LE1092-1CA02-6...	35	0.013	77.0	89.3	4500	TB1F00	6SL3210-1PH21-4.L0	FSD	
	35	0.013	77.0	89.3	4500		6SL3210-1PH21-4.L0	FSD	
1LE1092-1CA12-6...	40	0.016	77.0	89.4	4500	TB1H00	6SL3210-1PH21-4.L0	FSD	
	40	0.016	77.0	89.4	4500		6SL3210-1PH21-4.L0	FSD	
1LE1092-1DA22-6...	60	0.03	80.0	92.4	4500	TB1H00	6SL3210-1PH22-0.L0	FSD	
	60	0.03	80.0	92.4	4500		6SL3210-1PH22-0.L0	FSD	
1LE1092-1DA32-6...	68	0.036	80.0	92.8	4500	TB1J00	6SL3210-1PH22-3.L0	FSD	
	68	0.036	80.0	92.8	4500		6SL3210-1PH22-3.L0	FSD	
1LE1092-1DA42-6...	78	0.044	80.0	92.8	4500	TB1J00	6SL3210-1PH22-7.L0	FSD	
	78	0.044	80.0	92.8	4500		6SL3210-1PH22-7.L0	FSD	
1LE1092-1AB42-6...	18	0.0059	80.0	92.1	4200	TB1F00			
	18	0.0059	80.0	92.1	4200				
	18	0.0059	81.0	93.1	4200				
1LE1092-1AB52-6...	22	0.0078	80.0	92.1	4200	TB1F00			
	22	0.0078	80.0	92.1	4200				
	22	0.0078	81.0	93.1	4200				
1LE1092-1BB22-6...	27	0.01	79.0	91.3	4200	TB1F00			
	27	0.01	79.0	91.3	4200				
	27	0.01	80.0	92.3	4200		6SL3210-1PH21-4.L0	FSD	
1LE1092-1CB02-6...	38	0.019	77.0	89.4	4200	TB1H00	6SL3210-1PH21-4.L0	FSD	
	38	0.019	77.0	89.4	4200		6SL3210-1PH21-4.L0	FSD	
	38	0.019	83.0	95.4	4200		6SL3210-1PH22-0.L0	FSD	
1LE1092-1CB22-6...	44	0.024	77.0	89.4	4200	TB1H00	6SL3210-1PH21-4.L0	FSD	
	44	0.024	77.0	89.4	4200		6SL3210-1PH21-4.L0	FSD	
	44	0.024	83.0	95.4	4200		6SL3210-1PH22-3.L0	FSD	
1LE1092-1DB22-6...	62	0.044	85.0	97.8	4200	TB1J00	6SL3210-1PH22-0.L0	FSD	
	62	0.044	85.0	97.8	4200		6SL3210-1PH22-0.L0	FSD	
	62	0.044	85.0	97.8	4200		6SL3210-1PH23-5.L0	FSD	
1LE1092-1DB42-6...	73	0.056	85.0	97.8	4200	TB1J00	6SL3210-1PH22-3.L0	FSD	
	73	0.056	85.0	97.8	4200		6SL3210-1PH22-3.L0	FSD	
	73	0.056	85.0	97.8	4200		6SL3210-1PH24-2.L0	FSD	

[1] In addition to the Power Module, a Control Unit and an Operator Panel are required (see Catalog D 31 and/or D 35).

© Siemens AG 2018

Self-ventilated, enclosed motors – line voltage 690 V, 50 Hz/690 V, 87 Hz

Selection and ordering data

P_{rated} 50 Hz, 690 V	P_{rated} 60 Hz	P_{rated} 87 Hz, 690 V	Frame size	Connection	Operating values at rated power f_{rated}	T_{rated}	$\eta_{rated, 4/4}$ for converter operation	$\cos\varphi_{rated, 4/4}$	I_{rated}	1LE1092 aluminum series Version specifically for converter operation
kW	kW	kW			Hz	Nm	%		A	Article No.
• Insulation: Thermal class 155 (temperature class F), IP55 degree of protection, utilization in accordance with thermal class 155 (temperature class F)										
• Operation with a SINAMICS G converter with uncontrolled infeed – rated motor voltage 660 V/50 Hz/660 V, 87 Hz										
3000 rpm	3600 rpm	5220 rpm	2-pole							
3			100 L	Y	52.7	9.6	81.5	0.87	3.7	1LE1092-1AA43-3■■■
		5		Δ	89.5	9.1	84.5	0.81	6.4	
4			112 M	Y	51.2	12.7	83.1	0.86	4.9	1LE1092-1BA23-3■■■
		6.6		Δ	88.2	12.1	84.5	0.83	8.2	
5.5			132 S	Y	51.6	17.5	84.7	0.89	6.4	1LE1092-1CA03-3■■■
7.5			132 S	Y	51.2	23.9	86.0	0.87	8.8	1LE1092-1CA13-3■■■
11			160 M	Y	51.3	35.0	87.6	0.85	12.9	1LE1092-1DA23-3■■■
15			160 M	Y	51.4	47.8	88.7	0.84	17.6	1LE1092-1DA33-3■■■
18.5			160 L	Y	51.3	58.9	89.3	0.86	20.5	1LE1092-1DA43-3■■■
1500 rpm	1800 rpm	2610 rpm	4-pole							
2.2			100 L	Y	52.9	14.0	79.7	0.81	3	1LE1092-1AB43-3■■■
		3.7		Δ	89.5	13.5	83.0	0.79	4.95	
3			100 L	Y	52.5	19.1	81.5	0.85	3.8	1LE1092-1AB53-3■■■
		5		Δ	89.5	18.3	85.0	0.79	6.5	
4			112 M	Y	52.5	25.5	83.1	0.85	5	1LE1092-1BB23-3■■■
		6.6		Δ	89.2	24.1	85.0	0.81	8.4	
5.5			132 S	Y	52.0	35.0	84.7	0.82	6.9	1LE1092-1CB03-3■■■
		9		Δ	88.7	32.9	87.0	0.81	11.2	
7.5			132 M	Y	51.7	47.8	86.0	0.82	9.3	1LE1092-1CB23-3■■■
		12.5		Δ	88.6	45.7	87.5	0.80	15.6	
11			160 M	Y	51.5	70.0	87.6	0.82	13.4	1LE1092-1DB23-3■■■
		17		Δ	88.3	62.2	88.5	0.78	21.5	
15			160 L	Y	51.4	95.5	88.7	0.82	18	1LE1092-1DB43-3■■■
		23.5		Δ	88.2	86.0	90.5	0.77	29.5	
For versions, see Article No. supplements and special versions.										■■■

All technical specifications refer to converter operation.

© Siemens AG 2018

Motor type	$m_{IM\ B3}$	J	L_{pfA}, tolerance +3 dB(A) load	L_{WA}, tolerance +3 dB(A) load	Mech. speed limit	Terminal box	**Preferred SINAMICS G120 – PM240(-2)** Other SINAMICS converters also possible Operating mode: Low overload	Frame size	IES class acc. to EN 50598-2
	kg	kgm^2	dB(A)	dB(A)	rpm		Type [1]		
1LE1092-1AA43-3...	20	0.0034	80.0	92.1	5500	TB1F00			
	20	0.0034	85.0	97.1	5500				
1LE1092-1BA23-3...	25	0.0067	79.0	91.1	5500	TB1F00			
	25	0.0067	85.0	97.2	5500		6SL3210-1PH21-4.L0	FSD	
1LE1092-1CA03-3...	35	0.013	77.0	89.3	4500	TB1F00	6SL3210-1PH21-4.L0	FSD	
1LE1092-1CA13-3...	40	0.016	77.0	89.4	4500	TB1H00	6SL3210-1PH21-4.L0	FSD	
1LE1092-1DA23-3...	60	0.03	80.0	92.4	4500	TB1H00	6SL3210-1PH21-4.L0	FSD	
1LE1092-1DA33-3...	68	0.036	80.0	92.8	4500	TB1J00	6SL3210-1PH22-0.L0	FSD	
1LE1092-1DA43-3...	78	0.044	80.0	92.8	4500	TB1J00	6SL3210-1PH22-3.L0	FSD	
1LE1092-1AB43-3...	18	0.0059	80.0	92.1	4200	TB1F00			
	18	0.0059	81.0	93.1	4200				
1LE1092-1AB53-3...	22	0.0078	80.0	92.1	4200	TB1F00			
	22	0.0078	81.0	93.1	4200				
1LE1092-1BB23-3...	27	0.01	79.0	91.3	4200	TB1F00			
	27	0.01	80.0	92.3	4200		6SL3210-1PH21-4.L0	FSD	
1LE1092-1CB03-3...	38	0.019	77.0	89.4	4200	TB1H00	6SL3210-1PH21-4.L0	FSD	
	38	0.019	83.0	95.4	4200		6SL3210-1PH21-4.L0	FSD	
1LE1092-1CB23-3...	44	0.024	77.0	89.4	4200	TB1H00	6SL3210-1PH21-4.L0	FSD	
	44	0.024	83.0	95.4	4200		6SL3210-1PH22-0.L0	FSD	
1LE1092-1DB23-3...	62	0.044	85.0	97.8	4200	TB1J00	6SL3210-1PH21-4.L0	FSD	
	62	0.044	85.0	97.8	4200		6SL3210-1PH22-7.L0	FSD	
1LE1092-1DB43-3...	73	0.056	85.0	97.8	4200	TB1J00	6SL3210-1PH22-0.L0	FSD	
	73	0.056	85.0	97.8	4200		6SL3210-1PH23-5.L0	FSD	

[1] In addition to the Power Module, a Control Unit and an Operator Panel are required (see Catalog D 31 and/or D 35).

© Siemens AG 2018

Self-ventilated, enclosed motors – line voltage 400 V, 50 Hz/460 V, 60 Hz/400 V, 87 Hz

Selection and ordering data

P_{rated} 50 Hz, 400 V	P_{rated} 60 Hz, 460 V	P_{rated} 87 Hz, 400 V	Frame size	Connection	Operating values at rated power f_{rated}	T_{rated}	$\eta_{rated, 4/4}$ for converter operation	$\cos\varphi_{rated, 4/4}$	I_{rated}	1LE1592 cast-iron series Version specifically for converter operation
kW	kW	kW			Hz	Nm	%		A	Article No.
• Insulation: Thermal class 155 (temperature class F), IP55 degree of protection, utilization in accordance with thermal class 155 (temperature class F)										
• Operation with a SINAMICS G converter with uncontrolled infeed – rated motor voltage 380 V, 50 Hz/440 V, 60 Hz/380 V, 87 Hz										
3000 rpm	3600 rpm	5220 rpm	2-pole							
3			**100 L**	Y	52.9	9.6	81.5	0.87	6.4	**1LE1592-1AA42-1■■■**
	3.45			Y	62.8	9.2	84.5	0.88	6.1	
		4.5		Δ	89.4	8.2	84.5	0.82	9.9	
4.0			**112 M**	Y	51.2	12.7	83.1	0.86	8.5	**1LE1592-1BA22-1■■■**
	4.6			Y	61.2	12.1	84.5	0.88	8	
		6.6		Δ	88.2	12.1	84.5	0.83	14.2	
5.5			**132 S**	Y	51.4	17.5	84.7	0.89	11.1	**1LE1592-1CA02-1■■■**
	6.3			Y	61.4	16.7	86.0	0.90	10.7	
7.5			**132 S**	Y	51.2	23.9	86.0	0.87	15.2	**1LE1592-1CA12-1■■■**
	8.6			Y	61.2	22.8	88.7	0.88	14.7	
11			**160 M**	Y	51.3	35.0	87.6	0.85	22.5	**1LE1592-1DA22-1■■■**
	12.6			Y	61.2	33.4	87.5	0.86	22	
15.0			**160 M**	Y	51.4	47.8	88.7	0.84	30.5	**1LE1592-1DA32-1■■■**
	17.3			Y	61.4	45.9	89.5	0.86	29.5	
18.5			**160 L**	Y	51.1	58.9	89.3	0.86	36.5	**1LE1592-1DA42-1■■■**
	21.3			Y	61.1	56.5	89.5	0.87	36	
22			**180 M**	Y	51.0	70	89.9	0.87	42.5	**1LE1592-1EA22-1■■■**
	24.5			Y	60.9	65.0	89.5	0.87	41.5	
30			**200 L**	Y	50.9	96	90.7	0.84	60	**1LE1592-2AA42-1■■■**
	33.5			Y	60.9	88.9	91.5	0.84	57	
37			**200 L**	Y	50.8	118	91.2	0.88	70	**1LE1592-2AA52-1■■■**
	41.5			Y	60.7	110.1	91.7	0.89	67	
45			**225 M**	Y	50.7	143	91.7	0.88	85	**1LE1592-2BA22-1■■■**
	51			Y	60.7	135.0	92.4	0.88	82	
55			**250 M**	Y	50.6	175	92.1	0.88	103	**1LE1592-2CA22-1■■■**
	62			Y	60.6	164.0	92.4	0.88	100	
75			**280 S**	Y	50.5	239	92.7	0.87	141	**1LE1592-2DA02-1■■■**
	84			Y	60.5	223.0	93.0	0.87	136	
90			**280 M**	Y	50.4	286	93.0	0.88	167	**1LE1592-2DA22-1■■■**
	101			Y	60.4	268	93.0	0.88	162	
For versions, see Article No. supplements and special versions.										■■■

All technical specifications refer to converter operation.

© Siemens AG 2018

Motor type	$m_{IM\ B3}$	J	L_{pfA}, tolerance +3 dB(A) load	L_{WA}, tolerance +3 dB(A) load	Mech. speed limit	Terminal box	**Preferred SINAMICS G120 – PM240(-2)** Other SINAMICS converters also possible Operating mode: Low overload	Frame size	IES class acc. to EN 50598-2
	kg	kgm^2	dB(A)	dB(A)	rpm		Type [1]		
1LE1592-1AA42-1...	31	0.0034	79.0	91.1	5500	TB1F01	6SL3210-1PE18-0.L1	FSA	IES 1
	31	0.0034	79.0	91.1	5500		6SL3210-1PE18-0.L1	FSA	IES 1
	31	0.0034	83.0	95.1	5500		6SL3210-1PE21-4.L0	FSB	IES 1
1LE1592-1BA22-1...	36	0.0067	78.0	90.1	5500	TB1F01	6SL3210-1PE21-4.L0	FSB	IES 1
	36	0.0067	78.0	90.1	5500		6SL3210-1PE21-4.L0	FSB	IES 1
	36	0.0067	83.0	95.2	5500		6SL3210-1PE22-7.L0	FSC	IES 1
1LE1592-1CA02-1...	53	0.013	76.0	88.3	4500	TB1H01	6SL3210-1PE21-8.L0	FSB	IES 1
	53	0.013	76.0	88.3	4500		6SL3210-1PE21-8.L0	FSB	IES 1
1LE1592-1CA12-1...	58	0.016	76.0	88.4	4500	TB1H01	6SL3210-1PE22-7.L0	FSC	IES 2
	58	0.016	76.0	88.4	4500		6SL3210-1PE22-7.L0	FSC	IES 2
1LE1592-1DA22-1...	87	0.03	79.0	91.4	4500	TB1J01	6SL3210-1PE23-3.L0	FSC	IES 1
	87	0.03	78.0	90.4	4500		6SL3210-1PE23-3.L0	FSC	IES 1
1LE1592-1DA32-1...	95	0.036	79.0	91.8	4500	TB1J01	6SL3210-1PE23-8.L0	FSD	IES 1
	95	0.036	78.0	90.8	4500		6SL3210-1PE23-8.L0	FSD	IES 1
1LE1592-1DA42-1...	105	0.044	79.0	91.8	4500	TB1J01	6SL3210-1PE23-8.L0	FSD	IES 2
	105	0.044	78.0	90.8	4500		6SL3210-1PE23-8.L0	FSD	IES 2
1LE1592-1EA22-1...	150	0.069	79.0	92.0	4500	TB1J01	6SL3210-1PE24-5.L0	FSD	IES 2
	150	0.069	78.0	91.0	4500		6SL3210-1PE24-5.L0	FSD	IES 2
1LE1592-2AA42-1...	195	0.124	78.0	91.0	4500	TB1L01	6SL3210-1PE26-0.L0	FSD	IES 2
	195	0.124	78.0	91.0	4500		6SL3210-1PE26-0.L0	FSD	IES 2
1LE1592-2AA52-1...	230	0.15	76.0	89.1	4500	TB1L01	6SL3210-1PE27-5.L0	FSD	IES 2
	230	0.15	76.0	89.1	4500		6SL3210-1PE27-5.L0	FSD	IES 2
1LE1592-2BA22-1...	280	0.22	78.0	90.0	4500	TB1L01	6SL3210-1PE28-8.L0	FSE	IES 2
	280	0.22	80.0	93.0	4500		6SL3210-1PE28-8.L0	FSE	IES 2
1LE1592-2CA22-1...	360	0.4	78.0	92.0	3900	TB1N01	6SL3210-1PE31-1.L0	FSE	IES 2
	360	0.4	82.0	96.0	3900		6SL3210-1PE31-1.L0	FSE	IES 2
1LE1592-2DA02-1...	470	0.72	78.0	92.0	3600	TB1N01	6SL3210-1PE31-5.L0	FSF	IES 2
	470	0.72	82.0	96.0	3600		6SL3210-1PE31-5.L0	FSF	IES 2
1LE1592-2DA22-1...	530	0.83	78.0	92.0	3600	TB1N01	6SL3210-1PE31-8.L0	FSF	IES 2
	530	0.83	82.0	96.0	3600		6SL3210-1PE31-8.L0	FSF	IES 2

[1] In addition to the Power Module, a Control Unit and an Operator Panel are required (see Catalog D 31 and/or D 35).

© Siemens AG 2018

Self-ventilated, enclosed motors – line voltage 400 V, 50 Hz/460 V, 60 Hz/400 V, 87 Hz

Selection and ordering data

P_{rated} 50 Hz, 400 V	P_{rated} 60 Hz, 460 V	P_{rated} 87 Hz, 400 V	Frame size	Connection	Operating values at rated power f_{rated}	T_{rated}	$\eta_{rated, 4/4}$ for converter operation	$\cos\varphi_{rated, 4/4}$	I_{rated}	1LE1592 cast-iron series Version specifically for converter operation
kW	kW	kW			Hz	Nm	%		A	Article No.
• Insulation: Thermal class 155 (temperature class F), IP55 degree of protection, utilization in accordance with thermal class 155 (temperature class F)										
• Operation with a SINAMICS G converter with uncontrolled infeed – rated motor voltage 380 V, 50 Hz/440 V, 60 Hz/380 V, 87 Hz										
1500 rpm	1800 rpm	2610 rpm	4-pole							
2.2			100 L	Y	52.9	14.0	79.7	0.81	5.2	1LE1592-1AB42-1■■■
	2.55			Y	62.8	13.5	83.0	0.82	4.9	
		3.7		Δ	89.3	13.5	83.0	0.79	8.6	
3			100 L	Y	52.7	19.1	81.5	0.85	6.6	1LE1592-1AB52-1■■■
	3.45			Y	62.6	18.3	85.0	0.86	6.2	
		5		Δ	89.3	18.3	85.0	0.79	11.3	
4			112 M	Y	52.3	25.5	83.1	0.85	8.6	1LE1592-1BB22-1■■■
	4.55			Y	62.2	24.0	85.0	0.85	8.3	
		6.6		Δ	89.0	24.0	85.0	0.81	14.6	
5.5			132 S	Y	52.1	35.0	84.7	0.82	12	1LE1592-1CB02-1■■■
	6.3			Y	62.0	33.5	87.0	0.84	11.3	
		9		Δ	88.8	33.0	87.0	0.81	19.4	
7.5			132 M	Y	51.7	47.5	86.0	0.82	16.2	1LE1592-1CB22-1■■■
	8.6			Y	61.7	45.5	87.5	0.84	15.4	
		12.5		Δ	88.8	45.5	87.5	0.80	27.1	
11			160 M	Y	51.5	70.0	87.6	0.82	23.5	1LE1592-1DB22-1■■■
	12.6			Y	61.4	67.0	88.5	0.82	23	
		17		Δ	88.3	62.0	88.5	0.78	37.5	
15			160 L	Y	51.4	95.0	88.7	0.82	31.5	1LE1592-1DB42-1■■■
	17.3			Y	61.4	92.0	90.5	0.82	30.5	
		23.5		Δ	88.2	86.0	90.5	0.77	51	
18.5			180 M	Y	51.1	118	89.3	0.85	37	1LE1592-1EB22-1■■■
	21.3			Y	61.1	113	91.0	0.85	36	
		31		Δ	88.1	113	91.0	0.84	62	
22			180 L	Y	51.1	140	89.9	0.83	45	1LE1592-1EB42-1■■■
	25.3			Y	61.1	134	91.0	0.84	43.5	
		36.5		Δ	88.0	134	91.0	0.82	74	
30			200 L	Y	50.9	191	90.7	0.83	60	1LE1592-2AB52-1■■■
	34.5			Y	60.9	183	92.4	0.84	58	
		48		Δ	87.8	176	92.4	0.81	97	
37			225 S	Y	50.9	236	91.4	0.85	72	1LE1592-2BB02-1■■■
	42.5			Y	60.9	225	92.4	0.86	70	
45			225 M	Y	50.9	286	92.4	0.88	84	1LE1592-2BB22-1■■■
	52			Y	60.9	276	93.0	0.83	84	
55			250 M	Y	50.8	350	92.3	0.86	105	1LE1592-2CB22-1■■■
	63			Y	60.8	334	93.0	0.86	103	
75			280 S	Y	50.6	477	92.7	0.86	143	1LE1592-2DB02-1■■■
	86			Y	60.6	456	93.2	0.87	139	
90			280 M	Y	50.6	573	93.0	0.87	169	1LE1592-2DB22-1■■■
	104			Y	60.6	552	93.2	0.87	168	
106			315 S	Y	50.4	675	94.0	0.84	205	1LE1592-3AB02-1■■■
	125			Y	60.4	663	94.2	0.85	205	
130			315 M	Y	50.4	828	94.4	0.84	250	1LE1592-3AB22-1■■■
	152			Y	60.4	806	94.8	0.85	250	
160			315 L	Y	50.4	1019	95.0	0.87	295	1LE1592-3AB42-1■■■
	184			Y	60.4	976	95.0	0.87	290	
200			315 L	Y	50.5	1273	95.5	0.89	360	1LE1592-3AB52-1■■■
	230			Y	60.5	1220	95.0	0.89	355	

For versions, see Article No. supplements and special versions. ■■■

All technical specifications refer to converter operation.

© Siemens AG 2018

Motor type	$m_{IM\ B3}$	J	L_{pfA}, tolerance +3 dB(A) load	L_{WA}, tolerance +3 dB(A) load	Mech. speed limit	Terminal box	**Preferred SINAMICS G120 – PM240(-2)** Other SINAMICS converters also possible Operating mode: Low overload	Frame size	IES class acc. to EN 50598-2
	kg	kgm^2	dB(A)	dB(A)	rpm		Type [1]		
1LE1592-1AB42-1...	29	0.0059	79.0	91.0	4200	TB1F01	6SL3210-1PE16-1.L1	FSA	IES 1
	29	0.0059	79.0	91.0	4200		6SL3210-1PE16-1.L1	FSA	IES 1
	29	0.0059	81.0	93.0	4200		6SL3210-1PE21-1.L0	FSB	IES 1
1LE1592-1AB52-1...	33	0.0078	79.0	91.0	4200	TB1F01	6SL3210-1PE18-0.L1	FSA	IES 1
	33	0.0078	79.0	91.0	4200		6SL3210-1PE18-0.L1	FSA	IES 1
	33	0.0078	81.0	93.0	4200		6SL3210-1PE21-4.L0	FSB	IES 1
1LE1592-1BB22-1...	38	0.01	77.4	89.4	4200	TB1F01	6SL3210-1PE21-1.L0	FSB	IES 1
	38	0.01	77.2	89.2	4200		6SL3210-1PE21-1.L0	FSB	IES 1
	38	0.01	78.4	90.4	4200		6SL3210-1PE21-8.L0	FSB	IES 1
1LE1592-1CB02-1...	60	0.019	76.0	88.0	4200	TB1H01	6SL3210-1PE21-4.L0	FSB	IES 1
	60	0.019	76.0	88.0	4200		6SL3210-1PE21-4.L0	FSB	IES 1
	60	0.019	83.0	95.0	4200		6SL3210-1PE22-7.L0	FSC	IES 1
1LE1592-1CB22-1...	62	0.024	76.0	88.0	4200	TB1H01	6SL3210-1PE21-8.L0	FSB	IES 1
	62	0.024	76.0	88.0	4200		6SL3210-1PE21-8.L0	FSB	IES 1
	62	0.024	83.0	95.0	4200		6SL3210-1PE23-3.L0	FSC	IES 1
1LE1592-1DB22-1...	89	0.044	83.5	95.5	4200	TB1J01	6SL3210-1PE22-7.L0	FSC	IES 1
	89	0.044	82.3	94.3	4200		6SL3210-1PE22-7.L0	FSC	IES 1
	89	0.044	85.8	97.8	4200		6SL3210-1PE24-5.L0	FSD	IES 1
1LE1592-1DB42-1...	100	0.056	83.5	95.5	4200	TB1J01	6SL3210-1PE23-3.L0	FSC	IES 2
	100	0.056	82.3	94.3	4200		6SL3210-1PE23-3.L0	FSC	IES 2
	100	0.056	85.8	97.8	4200		6SL3210-1PE26-0.L0	FSD	IES 2
1LE1592-1EB22-1...	170	0.13	71.0	83.0	4200	TB1J01	6SL3210-1PE23-8.L0	FSD	IES 2
	170	0.13	73.0	85.0	4200		6SL3210-1PE23-8.L0	FSD	IES 2
	170	0.13	84.0	96.0	4200		6SL3210-1PE27-5.L0	FSD	IES 2
1LE1592-1EB42-1...	170	0.13	71.0	83.0	4200	TB1J01	6SL3210-1PE24-5.L0	FSD	IES 2
	170	0.13	73.0	85.0	4200		6SL3210-1PE24-5.L0	FSD	IES 2
	170	0.13	84.0	96.0	4200		6SL3210-1PE28-8.L0	FSE	IES 2
1LE1592-2AB52-1...	220	0.2	76.3	88.3	4200	TB1L01	6SL3210-1PE26-0.L0	FSD	IES 2
	220	0.2	77.7	89.7	4200		6SL3210-1PE26-0.L0	FSD	IES 2
	220	0.2	83.1	95.1	4200		6SL3210-1PE31-1.L0	FSE	IES 2
1LE1592-2BB02-1...	260	0.37	67.0	83.0	4500	TB1L01	6SL3210-1PE27-5.L0	FSD	IES 2
	260	0.37	70.0	86.0	4500		6SL3210-1PE27-5.L0	FSD	IES 2
1LE1592-2BB22-1...	290	0.45	70.0	83.0	4500	TB1L01	6SL3210-1PE28-8.L0	FSE	IES 2
	290	0.45	72.0	86.0	4500		6SL3210-1PE28-8.L0	FSE	IES 2
1LE1592-2CB22-1...	360	0.69	70.0	83.0	3700	TB1N01	6SL3210-1PE31-1.L0	FSE	IES 2
	360	0.69	72.0	86.0	3700		6SL3210-1PE31-1.L0	FSE	IES 2
1LE1592-2DB02-1...	540	1.2	75.0	90.0	3000	TB1N01	6SL3210-1PE31-5.L0	FSF	IES 2
	540	1.2	76.0	91.0	3000		6SL3210-1PE31-5.L0	FSF	IES 2
1LE1592-2DB22-1...	560	1.4	75.0	90.0	3000	TB1N01	6SL3210-1PE31-8.L0	FSF	IES 2
	560	1.4	76.0	91.0	3000		6SL3210-1PE31-8.L0	FSF	IES 2
1LE1592-3AB02-1...	730	1.9	79.0	94.0	2600	TB1Q01	6SL3210-1PE32-1.L0	FSF	IES 2
	730	1.9	82.0	96.0	2600		6SL3210-1PE32-1.L0	FSF	IES 2
1LE1592-3AB22-1...	760	2.2	79.0	94.0	2600	TB1Q01	6SL3210-1PE32-5.L0	FSF	IES 2
	760	2.2	82.0	96.0	2600		6SL3210-1PE32-5.L0	FSF	IES 2
1LE1592-3AB42-1...	940	2.8	79.0	94.0	2600	TB1Q01	6SL3224-0XE41-3.A0	FSGX	IES 2
	940	2.8	80.0	95.0	2600		6SL3224-0XE41-3.A0	FSGX	IES 2
1LE1592-3AB52-1...	1140	3.5	81.0	96.0	2600	TB1Q01	6SL3224-0XE41-6.A0	FSGX	IES 2
	1140	3.5	82.0	96.0	2600		6SL3224-0XE41-6.A0	FSGX	IES 2

[1] In addition to the Power Module, a Control Unit and an Operator Panel are required (see Catalog D 31 and/or D 35).

© Siemens AG 2018

Self-ventilated, enclosed motors – line voltage 500 V, 50 Hz/575 V, 60 Hz/500 V, 87 Hz

Selection and ordering data

P_{rated} 50 Hz, 500 V	P_{rated} 60 Hz, 575 V	P_{rated} 87 Hz, 500 V	Frame size	Connection	Operating values at rated power f_{rated}	T_{rated}	$\eta_{rated, 4/4}$ for converter operation	$\cos\varphi_{rated, 4/4}$	I_{rated}	1LE1592 cast-iron series Version specifically for converter operation
kW	kW	kW			Hz	Nm	%		A	Article No.
• Insulation: Thermal class 155 (temperature class F), IP55 degree of protection, utilization in accordance with thermal class 155 (temperature class F)										
• Operation with a SINAMICS G converter with uncontrolled infeed – rated motor voltage 480 V, 50 Hz/550 V, 60 Hz/480 V, 87 Hz										
3000 rpm	3600 rpm	5220 rpm	2-pole							
3			**100 L**	Y	52.9	9.6	81.5	0.87	5.1	**1LE1592-1AA42-6■■■**
	3.45			Y	63.0	9.2	84.5	0.88	4.85	
		5		Δ	89.6	9.1	84.5	0.85	8.4	
4			**112 M**	Y	51.3	12.7	83.1	0.86	6.7	**1LE1592-1BA22-6■■■**
	4.55			Y	61.3	12.1	84.5	0.88	6.4	
		6.6		Δ	88.2	12.1	84.5	0.84	11.1	
5.5			**132 S**	Y	51.6	17.5	84.7	0.89	8.8	**1LE1592-1CA02-6■■■**
	6.3			Y	61.6	16.7	86.0	0.90	8.5	
7.5			**132 S**	Y	51.2	23.9	86.0	0.87	12.1	**1LE1592-1CA12-6■■■**
	8.6			Y	61.2	22.8	88.7	0.88	11.7	
11			**160 M**	Y	51.3	35.0	87.6	0.85	17.8	**1LE1592-1DA22-6■■■**
	12.6			Y	61.3	33.4	87.5	0.86	17.6	
14			**160 M**	Y	51.1	44.6	88.7	0.84	22.5	**1LE1592-1DA32-6■■■**
	16.5			Y	61.2	43.8	89.5	0.86	22.5	
17			**160 L**	Y	51.1	54.1	89.3	0.85	27	**1LE1592-1DA42-6■■■**
	19.5			Y	61.1	51.7	89.5	0.86	26.5	
22			**180 M**	Y	50.9	70	89.9	0.87	34	**1LE1592-1EA22-6■■■**
	24.5			Y	60.9	65	89.5	0.87	33	
30			**200 L**	Y	50.8	96	90.7	0.82	48.5	**1LE1592-2AA42-6■■■**
	33.5			Y	60.8	89	91.5	0.82	47	
34			**200 L**	Y	50.7	108	91.2	0.87	52	**1LE1592-2AA52-6■■■**
	40			Y	60.8	106	91.7	0.89	51	
41			**225 M**	Y	50.6	131	91.7	0.88	61	**1LE1592-2BA22-6■■■**
	48			Y	60.6	127	91.7	0.88	62	
53			**250 M**	Y	50.5	169	92.1	0.88	79	**1LE1592-2CA22-6■■■**
	60			Y	60.5	159	92.4	0.88	77	
75			**280 S**	Y	50.5	239	92.7	0.87	112	**1LE1592-2DA02-6■■■**
	84			Y	60.5	223	93.0	0.87	109	
90			**280 M**	Y	50.4	286	93.0	0.88	132	**1LE1592-2DA22-6■■■**
	101			Y	60.4	268	93.0	0.88	130	
For versions, see Article No. supplements and special versions.										■■■

All technical specifications refer to converter operation.

© Siemens AG 2018

Motor type	$m_{IM\ B3}$	J	L_{pfA}, tolerance +3 dB(A) load	L_{WA}, tolerance +3 dB(A) load	Mech. speed limit	Terminal box	**Preferred SINAMICS G120 – PM240(-2)** Other SINAMICS converters also possible Operating mode: Low overload	Frame size	IES class acc. to EN 50598-2
	kg	kgm^2	dB(A)	dB(A)	rpm		Type [1]		
1LE1592-1AA42-6...	31	0.0034	80.0	92.1	5500	TB1F01			
	31	0.0034	80.0	92.1	5500				
	31	0.0034	85.0	97.1	5500				
1LE1592-1BA22-6...	36	0.0067	79.0	91.1	5500	TB1F01			
	36	0.0067	79.0	91.1	5500				
	36	0.0067	85.0	97.2	5500		6SL3210-1PH21-4.L0	FSD	
1LE1592-1CA02-6...	53	0.013	77.0	89.3	4500	TB1H01	6SL3210-1PH21-4.L0	FSD	
	53	0.013	77.0	89.3	4500		6SL3210-1PH21-4.L0	FSD	
1LE1592-1CA12-6...	58	0.016	77.0	89.4	4500	TB1H01	6SL3210-1PH21-4.L0	FSD	
	58	0.016	77.0	89.4	4500		6SL3210-1PH21-4.L0	FSD	
1LE1592-1DA22-6...	87	0.03	80.0	92.4	4500	TB1J01	6SL3210-1PH22-0.L0	FSD	
	87	0.03	80.0	92.4	4500		6SL3210-1PH22-0.L0	FSD	
1LE1592-1DA32-6...	95	0.036	80.0	92.8	4500	TB1J01	6SL3210-1PH22-3.L0	FSD	
	95	0.036	80.0	92.8	4500		6SL3210-1PH22-3.L0	FSD	
1LE1592-1DA42-6...	105	0.044	80.0	92.8	4500	TB1J01	6SL3210-1PH22-7.L0	FSD	
	105	0.044	80.0	92.8	4500		6SL3210-1PH22-7.L0	FSD	
1LE1592-1EA22-6...	150	0.069	80.0	93.0	4500	TB1J01	6SL3210-1PH23-5.L0	FSD	
	150	0.069	80.0	93.0	4500		6SL3210-1PH23-5.L0	FSD	
1LE1592-2AA42-6...	195	0.124	79.0	92.0	4500	TB1L01	6SL3210-1PH25-2.L0	FSE	
	195	0.124	79.0	92.0	4500		6SL3210-1PH25-2.L0	FSE	
1LE1592-2AA52-6...	230	0.15	77.0	90.1	4500	TB1L01	6SL3210-1PH25-2.L0	FSE	
	230	0.15	77.0	90.1	4500		6SL3210-1PH25-2.L0	FSE	
1LE1592-2BA22-6...	280	0.22	78.0	90.0	4500	TB1L01	6SL3210-1PH26-2.L0	FSE	
	280	0.22	80.0	93.0	4500		6SL3210-1PH26-2.L0	FSE	
1LE1592-2CA22-6...	360	0.4	78.0	92.0	3900	TB1N01	6SL3210-1PH28-0.L0	FSF	
	360	0.4	82.0	96.0	3900		6SL3210-1PH28-0.L0	FSF	
1LE1592-2DA02-6...	470	0.72	78.0	92.0	3600	TB1N01	6SL3210-1PH31-2.L0	FSF	
	470	0.72	82.0	96.0	3600		6SL3210-1PH31-2.L0	FSF	
1LE1592-2DA22-6...	530	0.83	78.0	92.0	3600	TB1N01	6SL3210-1PH31-4.L0	FSF	
	530	0.83	82.0	96.0	3600		6SL3210-1PH31-4.L0	FSF	

[1] In addition to the Power Module, a Control Unit and an Operator Panel are required (see Catalog D 31 and/or D 35).

© Siemens AG 2018

Self-ventilated, enclosed motors – line voltage 500 V, 50 Hz/575 V, 60 Hz/500 V, 87 Hz

Selection and ordering data

P_{rated} 50 Hz, 500 V	P_{rated} 60 Hz, 575 V	P_{rated} 87 Hz, 500 V	Frame size	Connection	Operating values at rated power f_{rated}	T_{rated}	$\eta_{rated, 4/4}$ for converter operation	$\cos\varphi_{rated, 4/4}$	I_{rated}	1LE1592 cast-iron series Version specifically for converter operation
kW	kW	kW			Hz	Nm	%		A	Article No.
• Insulation: Thermal class 155 (temperature class F), IP55 degree of protection, utilization in accordance with thermal class 155 (temperature class F)										
• Operation with a SINAMICS G converter with uncontrolled infeed – rated motor voltage 480 V, 50 Hz/550 V, 60 Hz/480 V, 87 Hz										
1500 rpm	1800 rpm	2610 rpm	4-pole							
2.2			100 L	Y	52.8	14.0	79.7	0.81	4.1	1LE1592-1AB42-6■■■
	2.55			Y	62.8	13.5	83.0	0.82	3.95	
		4		Δ	89.6	13.5	83.0	0.79	6.8	
3			100 L	Y	52.6	19.1	81.5	0.85	5.2	1LE1592-1AB52-6■■■
	3.45			Y	62.6	18.3	85.0	0.86	4.95	
		5		Δ	89.3	18.3	85.0	0.79	8.7	
4			112 M	Y	52.4	25.5	83.1	0.85	6.8	1LE1592-1BB22-6■■■
	4.55			Y	62.3	24.1	85.0	0.85	6.6	
		7		Δ	89.1	24.1	85.0	0.81	12	
5.5			132 S	Y	52.0	35.0	84.7	0.82	9.5	1LE1592-1CB02-6■■■
	6.3			Y	62.0	33.4	87.0	0.84	9	
		9		Δ	88.8	32.9	87.0	0.81	15.4	
7.5			132 M	Y	51.9	47.8	86.0	0.82	12.8	1LE1592-1CB22-6■■■
	8.6			Y	61.9	45.6	87.5	0.84	12.3	
		13		Δ	88.7	45.7	87.5	0.80	21.5	
11			160 M	Y	51.5	70.0	87.6	0.82	18.4	1LE1592-1DB22-6■■■
	12.6			Y	61.5	66.9	88.5	0.82	18.2	
		17		Δ	88.4	62.2	88.5	0.78	29.5	
13.5			160 L	Y	51.2	86.0	88.7	0.79	23	1LE1592-1DB42-6■■■
	15.6			Y	61.2	82.8	90.5	0.81	22.5	
		24		Δ	88.3	86.0	90.5	0.77	40.5	
16.7			180 M	Y	51.0	106	89.3	0.84	27	1LE1592-1EB22-6■■■
	19.2			Y	61.0	102	91.0	0.84	26.5	
		31		Δ	88.0	113	91.0	0.84	49	
21.5			180 L	Y	51.1	137	89.9	0.83	34.5	1LE1592-1EB42-6■■■
	25.3			Y	61.2	134	91.0	0.84	34.5	
		37		Δ	88.1	134	91.0	0.82	59	
30			200 L	Y	51.0	191	90.7	0.83	48	1LE1592-2AB52-6■■■
	34.5			Y	61.0	183	92.4	0.84	46.5	
		48		Δ	87.9	176	92.4	0.81	77	
33			225 S	Y	50.6	210	92.0	0.84	51	1LE1592-2BB02-6■■■
	38			Y	60.6	202	92.4	0.84	51	
41			225 M	Y	50.7	261	92.4	0.87	61	1LE1592-2BB22-6■■■
	47			Y	60.7	249	93.0	0.87	61	
52			250 M	Y	50.7	331	92.3	0.85	80	1LE1592-2CB22-6■■■
	59			Y	60.7	313	93.0	0.85	78	
75			280 S	Y	50.5	477	92.7	0.85	114	1LE1592-2DB02-6■■■
	86			Y	60.5	456	93.2	0.86	113	
90			280 M	Y	50.6	573	93.0	0.87	134	1LE1592-2DB22-6■■■
	102			Y	60.6	541	93.2	0.87	132	
110			315 S	Y	50.4	700	94.0	0.84	168	1LE1592-3AB02-6■■■
	127			Y	60.4	674	94.2	0.84	168	
132			315 M	Y	50.4	840	94.4	0.85	198	1LE1592-3AB22-6■■■
	152			Y	60.4	806	94.8	0.85	198	
160			315 L	Y	50.3	1019	95.0	0.86	235	1LE1592-3AB42-6■■■
	184			Y	60.3	976	95.0	0.86	235	
200			315 L	Y	50.4	1273	95.0	0.88	290	1LE1592-3AB52-6■■■
	230			Y	60.4	1220	95.0	0.88	290	

For versions, see Article No. supplements and special versions. ■■■

All technical specifications refer to converter operation.

© Siemens AG 2018

Motor type	$m_{IM\ B3}$	J	L_{pfA}, tolerance +3 dB(A) load	L_{WA}, tolerance +3 dB(A) load	Mech. speed limit	Terminal box	**Preferred SINAMICS G120 – PM240(-2)** Other SINAMICS converters also possible Operating mode: Low overload	Frame size	IES class acc. to EN 50598-2
	kg	kgm^2	dB(A)	dB(A)	rpm		Type [1]		
1LE1592-1AB42-6...	29	0.0059	80.0	92.1	4200	TB1F01			
	29	0.0059	80.0	92.1	4200				
	29	0.0059	81.0	93.1	4200				
1LE1592-1AB52-6...	33	0.0078	80.0	92.1	4200	TB1F01			
	33	0.0078	80.0	92.1	4200				
	33	0.0078	81.0	93.1	4200				
1LE1592-1BB22-6...	38	0.01	79.0	91.3	4200	TB1F01			
	38	0.01	79.0	91.3	4200				
	38	0.01	80.0	92.3	4200		6SL3210-1PH21-4.L0	FSD	
1LE1592-1CB02-6...	60	0.019	77.0	89.4	4200	TB1H01	6SL3210-1PH21-4.L0	FSD	
	60	0.019	77.0	89.4	4200		6SL3210-1PH21-4.L0	FSD	
	60	0.019	83.0	95.4	4200		6SL3210-1PH22-0.L0	FSD	
1LE1592-1CB22-6...	62	0.024	77.0	89.4	4200	TB1H01	6SL3210-1PH21-4.L0	FSD	
	62	0.024	77.0	89.4	4200		6SL3210-1PH21-4.L0	FSD	
	62	0.024	83.0	95.4	4200		6SL3210-1PH22-3.L0	FSD	
1LE1592-1DB22-6...	89	0.044	85.0	97.8	4200	TB1J01	6SL3210-1PH22-0.L0	FSD	
	89	0.044	85.0	97.8	4200		6SL3210-1PH22-0.L0	FSD	
	89	0.044	85.0	97.8	4200		6SL3210-1PH23-5.L0	FSD	
1LE1592-1DB42-6...	100	0.056	85.0	97.8	4200	TB1J01	6SL3210-1PH22-3.L0	FSD	
	100	0.056	85.0	97.8	4200		6SL3210-1PH22-3.L0	FSD	
	100	0.056	85.0	97.8	4200		6SL3210-1PH24-2.L0	FSD	
1LE1592-1EB22-6...	170	0.13	72.0	85.0	4200	TB1J01	6SL3210-1PH22-7.L0	FSD	
	170	0.13	72.0	85.0	4200		6SL3210-1PH22-7.L0	FSD	
	170	0.13	84.0	97.0	4200		6SL3210-1PH25-2.L0	FSE	
1LE1592-1EB42-6...	170	0.13	72.0	85.0	4200	TB1J01	6SL3210-1PH23-5.L0	FSD	
	170	0.13	72.0	85.0	4200		6SL3210-1PH23-5.L0	FSD	
	170	0.13	84.0	97.0	4200		6SL3210-1PH26-2.L0	FSE	
1LE1592-2AB52-6...	220	0.2	78.0	91.3	4200	TB1L01	6SL3210-1PH25-2.L0	FSE	
	220	0.2	78.0	91.3	4200		6SL3210-1PH25-2.L0	FSE	
	220	0.2	84.0	97.3	4200		6SL3210-1PH31-0.L0	FSF	
1LE1592-2BB02-6...	260	0.37	70.0	84.0	4500	TB1L01	6SL3210-1PH25-2.L0	FSE	
	260	0.37	70.0	84.0	4500		6SL3210-1PH25-2.L0	FSE	
1LE1592-2BB22-6...	290	0.45	71.0	84.0	4500	TB1L01	6SL3210-1PH26-2.L0	FSE	
	290	0.45	71.0	84.0	4500		6SL3210-1PH26-2.L0	FSE	
1LE1592-2CB22-6...	360	0.69	71.0	84.0	3700	TB1N01	6SL3210-1PH28-0.L0	FSF	
	360	0.69	71.0	84.0	3700		6SL3210-1PH28-0.L0	FSF	
1LE1592-2DB02-6...	540	1.2	76.0	91.0	3000	TB1N01	6SL3210-1PH31-2.L0	FSF	
	540	1.2	76.0	91.0	3000		6SL3210-1PH31-2.L0	FSF	
1LE1592-2DB22-6...	560	1.4	76.0	91.0	3000	TB1N01	6SL3210-1PH31-4.L0	FSF	
	560	1.4	76.0	91.0	3000		6SL3210-1PH31-4.L0	FSF	
1LE1592-3AB02-6...	730	1.9	80.0	95.0	2600	TB1Q01	6SL3710-1GF31-8.A3	–	
	730	1.9	80.0	95.0	2600		6SL3710-1GF31-8.A3	–	
1LE1592-3AB22-6...	760	2.2	80.0	95.0	2600	TB1Q01	6SL3710-1GF32-2.A3	–	
	760	2.2	80.0	95.0	2600		6SL3710-1GF32-2.A3	–	
1LE1592-3AB42-6...	940	2.8	80.0	95.0	2600	TB1Q01	6SL3710-1GF32-6.A3	–	
	940	2.8	80.0	95.0	2600		6SL3710-1GF32-6.A3	–	
1LE1592-3AB52-6...	1140	3.5	82.0	96.0	2600	TB1Q01	6SL3710-1GF33-3.A3	–	
	1140	3.5	82.0	96.0	2600		6SL3710-1GF33-3.A3	–	

[1] In addition to the Power Module, a Control Unit and an Operator Panel are required (see Catalog D 31 and/or D 35).

© Siemens AG 2018

Self-ventilated, enclosed motors – line voltage 690 V, 50 Hz/690 V, 87 Hz

Selection and ordering data

P_{rated} 50 Hz, 690 V	P_{rated} 60 Hz	P_{rated} 87 Hz, 690 V	Frame size	Connection	Operating values at rated power f_{rated}	T_{rated}	$\eta_{rated, 4/4}$ for converter operation	$\cos\varphi_{rated, 4/4}$	I_{rated}	1LE1592 cast-iron series Version specifically for converter operation
kW	kW	kW			Hz	Nm	%		A	Article No.
• Insulation: Thermal class 155 (temperature class F), IP55 degree of protection, utilization in accordance with thermal class 155 (temperature class F)										
• Operation with a SINAMICS G converter with uncontrolled infeed – rated motor voltage 660 V, 50 Hz/660 V, 87 Hz										
3000 rpm	3600 rpm	5220 rpm	2-pole							
3			100 L	Y	52.7	9.6	81.5	0.87	3.7	1LE1592-1AA43-3■■■
		5		Δ	89.5	9.1	84.5	0.81	6.4	
4			112 M	Y	51.2	12.7	83.1	0.86	4.9	1LE1592-1BA23-3■■■
		6.6		Δ	88.2	12.1	84.5	0.83	8.2	
5.5			132 S	Y	51.6	17.5	84.7	0.89	6.4	1LE1592-1CA03-3■■■
7.5			132 S	Y	51.2	23.9	86.0	0.87	8.8	1LE1592-1CA13-3■■■
11			160 M	Y	51.3	35.0	87.6	0.85	12.9	1LE1592-1DA23-3■■■
15			160 M	Y	51.4	47.8	88.7	0.84	17.6	1LE1592-1DA33-3■■■
18.5			160 L	Y	51.3	58.9	89.3	0.86	20.5	1LE1592-1DA43-3■■■
22			180 M	Y	51.0	70	89.9	0.87	24.5	1LE1592-1EA23-3■■■
30			200 L	Y	50.9	96	90.7	0.84	34.5	1LE1592-2AA43-3■■■
37			200 L	Y	50.9	118	91.2	0.88	40.5	1LE1592-2AA53-3■■■
45			225 M	Y	50.7	143	91.7	0.88	49	1LE1592-2BA23-3■■■
55			250 M	Y	50.6	175	92.1	0.88	59	1LE1592-2CA23-3■■■
75			280 S	Y	50.5	239	92.7	0.88	80	1LE1592-2DA03-3■■■
90			280 M	Y	50.4	286	93.0	0.88	96	1LE1592-2DA23-3■■■
1500 rpm	1800 rpm	2610 rpm	4-pole							
2.2			100 L	Y	52.9	14.0	79.7	0.81	3	1LE1592-1AB43-3■■■
		3.7		Δ	89.5	13.5	83.0	0.79	4.95	
3			100 L	Y	52.5	19.1	81.5	0.85	3.8	1LE1592-1AB53-3■■■
		5		Δ	89.5	18.3	85.0	0.79	6.5	
4			112 M	Y	52.5	25.5	83.1	0.85	5	1LE1592-1BB23-3■■■
		6.6		Δ	89.2	24.1	85.0	0.81	8.4	
5.5			132 S	Y	52.0	35.0	84.7	0.82	6.9	1LE1592-1CB03-3■■■
		9		Δ	88.7	32.9	87.0	0.81	11.2	
7.5			132 M	Y	51.7	47.8	86.0	0.82	9.3	1LE1592-1CB23-3■■■
		12.5		Δ	88.6	45.7	87.5	0.80	15.6	
11			160 M	Y	51.5	70.0	87.6	0.82	13.4	1LE1592-1DB23-3■■■
		17		Δ	88.3	62.2	88.5	0.78	21.5	
15			160 L	Y	51.4	95.5	88.7	0.82	18	1LE1592-1DB43-3■■■
		23.5		Δ	88.2	86.0	90.5	0.77	29.5	
18.5			180 M	Y	51.1	117.8	89.3	0.85	21.5	1LE1592-1EB23-3■■■
		31		Δ	88.0	112	91.0	0.84	35	
22			180 L	Y	51.2	140	89.9	0.85	25	1LE1592-1EB43-3■■■
		36.5		Δ	88.2	134	91.0	0.84	42	
30			200 L	Y	51.0	191	90.7	0.83	35	1LE1592-2AB53-3■■■
		48		Δ	87.9	176	92.4	0.81	56	
37			225 S	Y	50.8	236	91.4	0.85	41.5	1LE1592-2BB03-3■■■
45			225 M	Y	50.8	286	92.4	0.88	48.5	1LE1592-2BB23-3■■■
55			250 M	Y	50.8	350	92.3	0.86	61	1LE1592-2CB23-3■■■
72			280 S	Y	50.5	458	92.7	0.85	80	1LE1592-2DB03-3■■■
90			280 M	Y	50.6	573	93.0	0.87	97	1LE1592-2DB23-3■■■
105			315 S	Y	50.4	668	94.0	0.85	115	1LE1592-3AB03-3■■■
130			315 M	Y	50.4	828	94.4	0.85	142	1LE1592-3AB23-3■■■
160			315 L	Y	50.3	1019	95.0	0.87	169	1LE1592-3AB43-3■■■
200			315 L	Y	50.4	1273	95.0	0.89	205	1LE1592-3AB53-3■■■
For versions, see Article No. supplements and special versions.										■■■

All technical specifications refer to converter operation.

© Siemens AG 2018

Motor type	$m_{IM\ B3}$	J	L_{pfA}, tolerance +3 dB(A) load	L_{WA}, tolerance +3 dB(A) load	Mech. speed limit	Terminal box	**Preferred SINAMICS G120 – PM240(-2)** Other SINAMICS converters also possible Operating mode: Low overload	Frame size	IES class acc. to EN 50598-2
	kg	kgm^2	dB(A)	dB(A)	rpm		Type [1]		
1LE1592-1AA43-3...	31	0.0034	80.0	92.1	5500	TB1F01			
	31	0.0034	85.0	97.1	5500				
1LE1592-1BA23-3...	36	0.0067	79.0	91.1	5500	TB1F01			
	36	0.0067	85.0	97.2	5500		6SL3210-1PH21-4.L0	FSD	
1LE1592-1CA03-3...	53	0.013	77.0	89.3	4500	TB1H01	6SL3210-1PH21-4.L0	FSD	
1LE1592-1CA13-3...	58	0.016	77.0	89.4	4500	TB1H01	6SL3210-1PH21-4.L0	FSD	
1LE1592-1DA23-3...	87	0.03	80.0	92.4	4500	TB1J01	6SL3210-1PH21-4.L0	FSD	
1LE1592-1DA33-3...	95	0.036	80.0	92.8	4500	TB1J01	6SL3210-1PH22-0.L0	FSD	
1LE1592-1DA43-3...	105	0.044	80.0	92.8	4500	TB1J01	6SL3210-1PH22-3.L0	FSD	
1LE1592-1EA23-3...	150	0.069	80.0	93.0	4500	TB1J01	6SL3210-1PH22-7.L0	FSD	
1LE1592-2AA43-3...	195	0.124	79.0	92.0	4500	TB1L01	6SL3210-1PH23-5.L0	FSD	
1LE1592-2AA53-3...	230	0.15	77.0	90.1	4500	TB1L01	6SL3210-1PH24-2.L0	FSD	
1LE1592-2BA23-3...	280	0.22	78.0	90.0	4500	TB1L01	6SL3210-1PH25-2.L0	FSE	
1LE1592-2CA23-3...	360	0.4	78.0	92.0	3900	TB1N01	6SL3210-1PH26-2.L0	FSE	
1LE1592-2DA03-3...	470	0.72	78.0	92.0	3600	TB1N01	6SL3210-1PH28-0.L0	FSF	
1LE1592-2DA23-3...	530	0.83	78.0	92.0	3600	TB1N01	6SL3210-1PH31-0.L0	FSF	
1LE1592-1AB43-3...	29	0.0059	80.0	92.1	4200	TB1F01			
	29	0.0059	81.0	93.1	4200				
1LE1592-1AB53-3...	33	0.0078	80.0	92.1	4200	TB1F01			
	33	0.0078	81.0	93.1	4200				
1LE1592-1BB23-3...	38	0.01	79.0	91.3	4200	TB1F01			
	38	0.01	80.0	92.3	4200		6SL3210-1PH21-4.L0	FSD	
1LE1592-1CB03-3...	60	0.019	77.0	89.4	4200	TB1H01	6SL3210-1PH21-4.L0	FSD	
	60	0.019	83.0	95.4	4200		6SL3210-1PH21-4.L0	FSD	
1LE1592-1CB23-3...	62	0.024	77.0	89.4	4200	TB1H01	6SL3210-1PH21-4.L0	FSD	
	62	0.024	83.0	95.4	4200		6SL3210-1PH22-0.L0	FSD	
1LE1592-1DB23-3...	89	0.044	85.0	97.8	4200	TB1J01	6SL3210-1PH21-4.L0	FSD	
	89	0.044	85.0	97.8	4200		6SL3210-1PH22-7.L0	FSD	
1LE1592-1DB43-3...	100	0.056	85.0	97.8	4200	TB1J01	6SL3210-1PH22-0.L0	FSD	
	100	0.056	85.0	97.8	4200		6SL3210-1PH23-5.L0	FSD	
1LE1592-1EB23-3...	170	0.13	72.0	85.0	4200	TB1J01	6SL3210-1PH22-3.L0	FSD	
	170	0.13	84.0	97.0	4200		6SL3210-1PH24-2.L0	FSD	
1LE1592-1EB43-3...	170	0.13	72.0	85.0	4200	TB1J01	6SL3210-1PH22-7.L0	FSD	
	170	0.13	84.0	97.0	4200		6SL3210-1PH25-2.L0	FSE	
1LE1592-2AB53-3...	220	0.2	78.0	91.3	4200	TB1L01	6SL3210-1PH23-5.L0	FSD	
	220	0.2	84.0	97.3	4200		6SL3210-1PH26-2.L0	FSE	
1LE1592-2BB03-3...	260	0.37	70.0	84.0	4500	TB1L01	6SL3210-1PH24-2.L0	FSD	
1LE1592-2BB23-3...	290	0.45	71.0	84.0	4500	TB1L01	6SL3210-1PH25-2.L0	FSE	
1LE1592-2CB23-3...	360	0.69	71.0	84.0	3700	TB1N01	6SL3210-1PH26-2.L0	FSE	
1LE1592-2DB03-3...	540	1.2	76.0	91.0	3000	TB1N01	6SL3210-1PH28-0.L0	FSF	
1LE1592-2DB23-3...	560	1.4	76.0	91.0	3000	TB1N01	6SL3210-1PH31-0.L0	FSF	
1LE1592-3AB03-3...	730	1.9	80.0	95.0	2600	TB1Q01	6SL3710-1GH31-2.A3	–	
1LE1592-3AB23-3...	760	2.2	80.0	95.0	2600	TB1Q01	6SL3710-1GH31-5.A3	–	
1LE1592-3AB43-3...	940	2.8	80.0	95.0	2600	TB1Q01	6SL3710-1GH31-8.A3	–	
1LE1592-3AB53-3...	1140	3.5	82.0	96.0	2600	TB1Q01	6SL3710-1GH32-2.A3	–	

[1] In addition to the Power Module, a Control Unit and an Operator Panel are required (see Catalog D 31 and/or D 35).

© Siemens AG 2018

Voltages – 1LE1092 aluminum series

Selection and ordering data

Voltages	Article No. supplement			Frame size				Motor version
	Voltage code 12th and 13th position of the Article No.		Additional identification code with order code and plain text if required	**100**	**112**	**132**	**160**	
				1LE1092				Standard Efficiency
1LE1092- . . . . ■ - ■ . . .			Order code					
Voltage at 50 Hz or 60 Hz								
Line voltage: 50 Hz, 400 V 60 Hz, 480 V	**2**	**1**	**–**	□	□	□	□	
Line voltage: 50 Hz, 690 V	**3**	**3**	**–**	✓	✓	✓	✓	
Non-standard voltage and/or frequencies								
Non-standard winding Reinforced insulation system (Advanced)	**9**	**0**	**M1Y** • and customer specifications	✓	✓	✓	✓	
Non-standard winding Special insulation system (Premium)	**9**	**0**	**M2Y** • and customer specifications	✓	✓	✓	✓	

□ Standard version
✓ With additional charge
• This order code only determines the price of the version – Additional plain text is required.

4

© Siemens AG 2018

Selection and ordering data

Voltages	Article No. supplement			Frame size										Motor version
	Voltage code 12th and 13th position of the Article No.		Additional identification code with order code and plain text if required	**100**	**112**	**132**	**160**	**180**	**200**	**225**	**250**	**280**	**315**	
				1LE1592										Standard Efficiency
1LE1592- . . . . ■ - ■ . . .			Order code											
Voltage at 50 Hz or 60 Hz														
Line voltage: 50 Hz, 400 V 60 Hz, 480 V	**2**	**1**	**–**	□	□	□	□	□	□	□	□	□	□	
Line voltage: 50 Hz, 500 V 60 Hz, 600 V	**2**	**6**	**–**	✓	✓	✓	✓	✓	✓	✓	✓	✓	✓	
Line voltage: 50 Hz, 690 V	**3**	**3**	**–**	✓	✓	✓	✓	✓	✓	✓	✓	✓	✓	
Non-standard voltage and/or frequencies														
Non-standard winding Reinforced insulation system (Advanced)	**9**	**0**	**M1Y •** and customer specifications	✓	✓	✓	✓	✓	✓	✓	✓	✓	✓	
Non-standard winding Special insulation system (Premium)	**9**	**0**	**M2Y •** and customer specifications	✓	✓	✓	✓	✓	✓	✓	✓	✓	✓	

□ Standard version
✓ With additional charge
• This order code only determines the price of the version – Additional plain text is required.

4

© Siemens AG 2018

Types of construction – 1LE1092 aluminum series

Selection and ordering data

Types of construction		Article No. supplement		Frame size				Motor version
		Type of construction code letter 14th position of the Article No.	For types of construction with order code(s) Article No. with additional identification code **-Z**	**100**	**112**	**132**	**160**	
				1LE1092				Standard Efficiency
1LE1092- . . . . . - .		**■ . . (-Z)**	Order code					
Without flange								
IM B3 [1) 2)]		**A**	**–**	□	□	□	□	
IM B6 [2)]	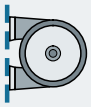	**T**	**–**	□	□	□	□	
IM B7 [2)]	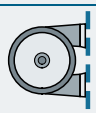	**U**	**–**	□	□	□	□	
IM B8 [2)]		**V**	**–**	□	□	□	□	
IM V6 [2)]	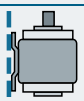	**D**	**–**	□	□	□	□	
IM V5 without protective cover [2)]	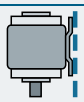	**C**	**–**	□	□	□	□	
IM V5 with protective cover [2) 3) 4) 5)]	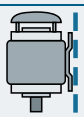	**C**	**H00**	✓	✓	✓	✓	
With flange		**Acc. to EN 50347** **Acc. to DIN 42948**		**FF215** **A 250**	**FF215** **A 250**	**FF265** **A 300**	**FF300** **A 350**	
IM B5 [2) 6)]	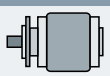	**F**	**–**	✓	✓	✓	✓	
IM V1 without protective cover [2)]		**G**	**–**	✓	✓	✓	✓	
IM V1 with protective cover [2) 3) 4) 5)]	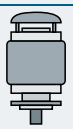	**G**	**H00**	✓	✓	✓	✓	
IM V3 [3)]		**H**	**–**	✓	✓	✓	✓	
IM B35	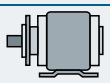	**J**	**–**	✓	✓	✓	✓	

For legends and footnotes, see page 4/90.

© Siemens AG 2018

Types of construction	Article No. supplement		Frame size				Motor version
	Type of construction code letter 14th position of the Article No.	For types of construction with order code(s) Article No. with additional identification code **-Z**	**100**	**112**	**132**	**160**	
			1LE1092				Standard Efficiency
1LE1092-. . . . . - . ■ . . (-Z)		Order code					
With flange	**Acc. to EN 50347**		**FT130**	**FT130**	**FT165**	**–**	
	Acc. to DIN 42948		**C 160**	**C 160**	**C 200**	**–**	
IM B14 2) 7)	**K**	**–**	✓	✓	✓	✓	
IM V19 2) 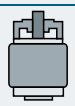	**L**	**–**	✓	✓	✓	✓	
IM V18 without protective cover 2) 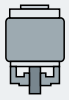	**M**	**–**	✓	✓	✓	✓	
IM V18 with protective cover 2) 3) 4) 5) 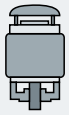	**M**	**–**	✓	✓	✓	✓	
IM B34	**N**	**–**	✓	✓	✓	✓	
With special flange next largest	**Acc. to EN 50347**		**FT165**	**FT165**	**FT215**	**–**	
	Acc. to DIN 42948		**C 200**	**C 200**	**C 250**	**–**	
IM B14 2) 7)	**K**	**P01**	✓	✓	✓	–	
IM V19 2) 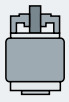	**L**	**P01**	✓	✓	✓	–	
IM V18 without protective cover 2) 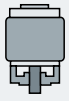	**M**	**P01**	✓	✓	✓	–	
IM V18 with protective cover 2) 3) 4) 5) 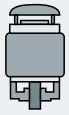	**M**	**P01+H00**	✓	✓	✓	–	
IM B34	**N**	**P01**	✓	✓	✓	–	

For legends and footnotes, see page 4/90.

© Siemens AG 2018

SIMOTICS GP VSD10 line standard motors for converter operation

Article No. supplements and special versions

Types of construction – 1LE1092 aluminum series

Types of construction	Article No. supplement: Type of construction code letter 14th position of the Article No.	Article No. supplement: For types of construction with order code(s) Article No. with additional identification code **-Z**	Frame size: **100**	**112**	**132**	**160**	Motor version
			1LE1092				Standard Efficiency
1LE1092-. . . . . - . ■ . . (-Z)		Order code					
With special flange next smallest	**Acc. to EN 50347**		**FT115**	**FT115**	**FT130**	**–**	
	Acc. to DIN 42948		**C 140**	**C 140**	**C 160**	**–**	
IM B14 2) 7)	**K**	**P02**	O. R.	O. R.	O. R.	–	
IM V19 2) 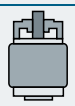	**L**	**P02**	O. R.	O. R.	O. R.	–	
IM V18 without protective cover 2) 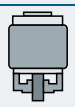	**M**	**P02**	O. R.	O. R.	O. R.	–	
IM V18 with protective cover 2) 3) 4) 5) 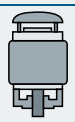	**M**	**P02+H00**	O. R.	O. R.	O. R.	–	
IM B34 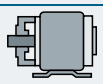	**N**	**P02**	O. R.	O. R.	O. R.	–	

□ Standard version
✓ With additional charge
– Not possible
O. R. Possible on request

4

1) The types of construction IM B6/7/8, IM V6 and IM V5 with/without protective cover are also possible as long as there are no condensation drainage holes (order code **H03**) and these types of construction do not have to be stamped on the rating plate. As standard the type of construction IM B3 is then stamped on the rating plate. With type of construction IM V5 with protective cover, the protective cover has to be additionally ordered with order code **H00**. The protective cover is not stamped on the rating plate.

2) The type of construction is stamped on the rating plate. For orders with condensation drainage holes (order code **H03**), if mounted in a different position, the position must be specified to ensure that the condensation drainage holes are positioned correctly.

3) The "Second shaft extension" option (order code **L05**) is not possible.

4) In combination with an encoder, it is not necessary to order the protective cover (order code **H00**), as this is delivered as a protection for the encoder as standard. In this case the protective cover is standard version (without additional charge).

5) Not possible for forced-air cooled motors with order code **F90** without external fan and fan cover.

6) The types of construction IM V3 and IM V1 with/without protective cover are also possible as long as there are no condensation drainage holes (order code **H03**) and these types of construction do not have to be stamped on the rating plate. As standard the type of construction IM B5 is then stamped on the rating plate. With type of construction IM V1 with protective cover, the protective cover has to be additionally ordered with order code **H00**. The protective cover is not stamped on the rating plate.

7) The types of construction IM V19 and IM V18 with/without protective cover are also possible as long as there are no condensation drainage holes (order code **H03**) and these types of construction do not have to be stamped on the rating plate. As standard the type of construction IM B14 is then stamped on the rating plate. With type of construction IM V18 with protective cover, the protective cover has to be additionally ordered with order code **H00**. The protective cover is not stamped on the rating plate.

© Siemens AG 2018

Selection and ordering data

Types of construction		Article No. supplement		Frame size											Motor version
		Type of construction code letter 14th position of the Article No.	For types of construction with order code(s) Article No. with additional identification code **-Z**	**100**	**112**	**132**	**160**	**180**	**200**	**225**	**250**	**280**	**315 S/M**	**315 L**	
				1LE1592											Standard Efficiency
1LE1592-. . . . . - .		■ . . **(-Z)**	Order code												
Without flange															
IM B3 [1] [2]		**A**	**–**	□	□	□	□	□	□	□	□	□	□	□	
IM B6 [2]	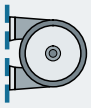	**T**	**–**	□	□	□	□	□	□	□	□	□	□	□	
IM B7 [2]	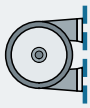	**U**	**–**	□	□	□	□	□	□	□	□	□	□	□	
IM B8 [2]		**V**	**–**	□	□	□	□	□	□	□	□	□	□	□	
IM V6 [2]	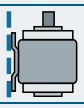	**D**	**–**	□	□	□	□	□	□	□	□	□	□	□	
IM V5 without protective cover [2]		**C**	**–**	□	□	□	□	□	□	□	□	□	□	□	
IM V5 with protective cover [2] [3] [4]	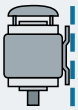	**C**	**H00**	✓	✓	✓	✓	✓	✓	✓	✓	✓	✓	✓	
With flange		**Acc. to EN 50347** **Acc. to DIN 42948**		**FF215** **A 250**	**FF215** **A 250**	**FF265** **A 300**	**FF300** **A 350**	**FF300** **A 350**	**FF350** **A 400**	**FF400** **A 450**	**FF500** **A 550**	**FF500** **A 550**	**FF600** **A 660**	**–** **A 660**	
IM B5 [2] [5]	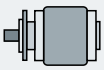	**F**	**–**	✓	✓	✓	✓	✓	✓	✓	✓	✓	✓	–	
IM V1 without protective cover [2]	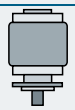	**G**	**–**	✓	✓	✓	✓	✓	✓	✓	✓	✓	✓	✓	
IM V1 with protective cover [2] [3] [4]		**G**	**H00**	✓	✓	✓	✓	✓	✓	✓	✓	✓	✓	✓	
IM V3 [4]		**H**	**–**	✓	✓	✓	✓	✓	✓	✓	✓	✓	✓	–	
IM B35	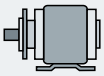	**J**	**–**	✓	✓	✓	✓	✓	✓	✓	✓	✓	✓	✓	

For legends and footnotes, see page 4/92.

© Siemens AG 2018

SIMOTICS SD VSD10 line standard motors for converter operation

Article No. supplements and special versions

Types of construction – 1LE1592 cast-iron series

Types of construction	Article No. supplement: Type of construction code letter 14th position of the Article No.	Article No. supplement: For types of construction with order code(s) Article No. with additional identification code **-Z**	Frame size: 100	112	132	160	180	200	225	250	280	315 S/M	315 L	Motor version
			1LE1592											Standard Efficiency
1LE1592-. . . . . - . ■ . . (-Z)		Order code												
With flange	**Acc. to EN 50347**		**FT130**	**FT130**	**FT165**	**FT215**	**–**	**–**	**–**	**–**	**–**	**–**	**–**	
	Acc. to DIN 42948		**C 160**	**C 160**	**C 200**	**C 250**	**–**	**–**	**–**	**–**	**–**	**–**	**–**	
IM B14 2) 6)	**K**	**–**	✓	✓	✓	✓	–	–	–	–	–	–	–	
IM V19 2) 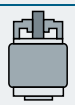	**L**	**–**	✓	✓	✓	✓	–	–	–	–	–	–	–	
IM V18 without protective cover 2) 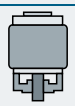	**M**	**–**	✓	✓	✓	✓	–	–	–	–	–	–	–	
IM V18 with protective cover 2) 3) 4) 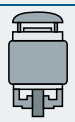	**M**	**H00**	✓	✓	✓	✓	–	–	–	–	–	–	–	
IM B34	**N**	**–**	✓	✓	✓	✓	–	–	–	–	–	–	–	
With special flange next largest	**Acc. to EN 50347**		**FT165**	**FT165**	**FT215**	**–**	**–**	**–**	**–**	**–**	**–**	**–**	**–**	
	Acc. to DIN 42948		**C 200**	**C 200**	**C 250**	**–**	**–**	**–**	**–**	**–**	**–**	**–**	**–**	
IM B14 2) 6)	**K**	**P01**	✓	✓	✓	–	–	–	–	–	–	–	–	
IM V19 2) 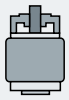	**L**	**P01**	✓	✓	✓	–	–	–	–	–	–	–	–	
IM V18 without protective cover 2) 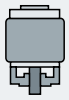	**M**	**P01**	✓	✓	✓	–	–	–	–	–	–	–	–	
IM V18 with protective cover 2) 3) 4) 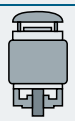	**M**	**P01+H00**	✓	✓	✓	–	–	–	–	–	–	–	–	
IM B34	**N**	**P01**	✓	✓	✓	–	–	–	–	–	–	–	–	

□ Standard version
✓ With additional charge
– Not possible

1) The types of construction IM B6/7/8, IM V6 and IM V5 with/without protective cover are also possible as long as no stamping of these types of construction on the rating plate is required. As standard the type of construction IM B3 is then stamped on the rating plate. With type of construction IM V5 with protective cover, the protective cover has to be additionally ordered with order code **H00**. The protective cover is not stamped on the rating plate.

2) The type of construction is stamped on the rating plate. If mounted in a different position, the position must be specified to ensure that the condensation drainage holes are positioned correctly.

3) In combination with an encoder, it is not necessary to order the protective cover (order code **H00**), as this is delivered as a protection for the encoder as standard. In this case the protective cover is standard design (without additional charge).

4) The "Second shaft extension" option (order code **L05**) is not possible.

5) The types of construction IM V3 and IM V1 with/without protective cover are also possible as long as no stamping of these types of construction on the rating plate is required. As standard the type of construction IM B5 is then stamped on the rating plate. With type of construction IM V1 with protective cover, the protective cover has to be additionally ordered with order code **H00**. The protective cover is not stamped on the rating plate.

6) The types of construction IM V19 and IM V18 with/without protective cover are also possible as long as no stamping of these types of construction on the rating plate is required. As standard the type of construction IM B14 is then stamped on the rating plate. With type of construction IM V18 with protective cover, the protective cover has to be additionally ordered with order code **H00**. The protective cover is not stamped on the rating plate.

© Siemens AG 2018

Selection and ordering data

Motor protection	Article No. supplement			Frame size				Motor version	
	Motor protection code letter 15th position of the Article No.	Additional identification code with order code and plain text if required		100	112	132	160		
				1LE1092				Standard Efficiency	
1LE1092-. . . . . - . .	**■** .	Order code							
Motor protection									
1 or 3 PTC thermistors – for tripping (2 terminals) [1]	**B**	–		✓	✓	✓	✓		
2 or 6 PTC thermistors – for alarm and tripping (4 terminals) [1]	**C**	–		✓	✓	✓	✓		
1 KTY84-130 temperature sensor (2 terminals) [1]	**F**	–		□	□	□	□		
2 KTY84-130 temperature sensors (4 terminals) [1]	**G**	–		✓	✓	✓	✓		
3 Pt100 resistance thermometers – 2-wire input (6 terminals) [1]	**H**	–		✓	✓	✓	✓		
1 Pt1000 resistance thermometer (2 terminals) [2]	**K**	–		✓	✓	✓	✓		
2 Pt1000 resistance thermometers (4 terminals) [2]	**L**	–		✓	✓	✓	✓		
1 Pt100 resistance thermometers – 2-wire input (2 terminals) [1]	**P**	–	*New!*	–	✓	✓	✓		
3 Pt100 resistance thermometers – 3-wire input (9 terminals) [1]	**Q**	–	*New!*	–	✓	✓	✓		
6 Pt100 resistance thermometers – 3-wire input (18 terminals) [1]	**R**	–	*New!*	–	✓	✓	✓		
3 bimetal sensors (NC contacts) for tripping (2 terminals) [1]	**Z**	**Q3A**		✓	✓	✓	✓	Only for:	Voltage code 2-1 (12th and 13th position of the Article No.)

□ Standard version
✓ With additional charge

[1] Evaluation with associated tripping unit (see Catalog IC 10) is recommended.

[2] Not UL-certified. Not in combination with option **D39**.

© Siemens AG 2018

Motor protection – 1LE1592 cast-iron series

Selection and ordering data

Motor protection	Article No. supplement		Frame size										Motor version	
	Motor protection code letter 15th position of the Article No.	Additional identification code with order code and plain text if required	100	112	132	160	180	200	225	250	280	315		
			1LE1592										Standard Efficiency	
1LE1592-. . . . . - . . ■ .		Order code												
Motor protection														
1 or 3 PTC thermistors – for tripping (2 terminals) [1]	**B**	**–**	✓	✓	✓	✓	✓	✓	✓	✓	✓	✓		
2 or 6 PTC thermistors – for alarm and tripping (4 terminals) [1]	**C**	**–**	✓	✓	✓	✓	✓	✓	✓	✓	✓	✓		
1 KTY84-130 temperature sensor (2 terminals) [1]	**F**	**–**	□	□	□	□	□	□	□	□	□	□		
2 KTY84-130 temperature sensors (4 terminals) [1]	**G**	**–**	✓	✓	✓	✓	✓	✓	✓	✓	✓	✓		
3 Pt100 resistance thermometers – 2-wire input (6 terminals)	**H**	**–**	✓	✓	✓	✓	✓	✓	✓	✓	✓	✓		
1 Pt1000 resistance thermometers (2 terminals) [3]	**K**	**–**	✓	✓	✓	✓	✓	✓	✓	✓	✓	✓		
2 Pt1000 resistance thermometers (4 terminals) [3]	**L**	**–**	✓	✓	✓	✓	✓	✓	✓	✓	✓	✓		
1 Pt100 resistance thermometer – 2-wire input (2 terminals)	**P**	**–**	✓	✓	✓	✓	✓	✓	✓	✓	✓	✓		
3 Pt100 resistance thermometers – 3-wire input (9 terminals)	**Q**	**–**	✓	✓	✓	✓	✓	✓	✓	✓	✓	✓		
6 Pt100 resistance thermometers – 3-wire input (18 terminals)	**R**	**–**	✓	✓	✓	✓	✓	✓	✓	✓	✓	✓		
3 bimetal sensors (NC contacts) for tripping (2 terminals) [2]	**Z**	**Q3A**	✓	✓	✓	✓	✓	✓	✓	✓	✓	✓	Only for:	Voltage code 2-1 (12th and 13th position of the Article No.)

□ Standard version
✓ With additional charge

[1] Evaluation with associated tripping unit (see Catalog IC 10) is recommended.

[2] Only applicable for voltage code (12th and 13th position of the Article No.) 2-1.

[3] Not possible in combination with UL.

© Siemens AG 2018

Selection and ordering data

Terminal box position	Article No. supplement			Frame size				Motor version
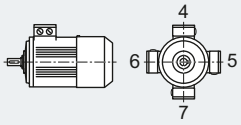	Terminal box position code 16th position of the Article No.		Additional identification code with order code and plain text if required	**100**	**112**	**132**	**160**	
				1LE1092				Standard Efficiency
1LE1092-. . . . . - . . . ■			Order code					
Terminal box position								
Terminal box top [1]	**4**		–	□	□	□	□	
Terminal box right-hand side [2]	**5**		–	✓	✓	✓	✓	
Terminal box left-hand side [2]	**6**		–	✓	✓	✓	✓	
Terminal box bottom [2]	**7**	*New!*	–	✓	✓	✓	✓	

□ Standard version
✓ With additional charge

[1] For types of construction with feet, cast feet are standard. Screwed-on feet are available with order code **H01**.

[2] For foot-mounted designs, screwed-on feet are standard.

© Siemens AG 2018

Terminal box position – 1LE1592 cast-iron series

Selection and ordering data

Terminal box position	Article No. supplement		Frame size										Motor version
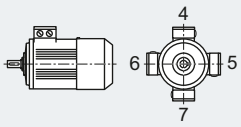	Terminal box position code 16th position of the Article No.	Additional identification code with order code and plain text if required	**100**	**112**	**132**	**160**	**180**	**200**	**225**	**250**	**280**	**315**	
			1LE1592										Standard Efficiency
1LE1592-. . . . . - . . . ■		Order code											
Terminal box position													
Terminal box top [1]	**4**	–	□	□	□	□	□	□	□	□	□	□	
Terminal box right-hand side [2]	**5**	–	✓	✓	✓	✓	✓	✓	✓	✓	✓	✓	
Terminal box left-hand side [2]	**6**	–	✓	✓	✓	✓	✓	✓	✓	✓	✓	✓	
Terminal box bottom [2]	**7**	*New!* –	✓	✓	✓	✓	–	–	–	–	–	–	

□ Standard version
✓ With additional charge

[1] For types of construction with feet, cast feet are standard. Screwed-on feet are available with order code **H01**.

[2] For foot-mounted designs, screwed-on feet are standard.

© Siemens AG 2018

Selection and ordering data

Special versions	Additional identification code **-Z** with order code and plain text if required		Frame size **100**	**112**	**132**	**160**	Motor version
			1LE1092				Standard Efficiency
1LE1092-. . . . . -. . . . -Z	Order code						
Motor protection							
1 or 3 PTC thermistors – for tripping (2 terminals) [2) 3)]	**Q11**		✓	✓	✓	✓	
2 or 6 PTC thermistors – for alarm and tripping (4 terminals) [3)]	**Q12**		✓	✓	✓	✓	
1 KTY84-130 temperature sensor (2 terminals) [3)]	**Q23**		✓	✓	✓	✓	
2 KTY84-130 temperature sensor (4 terminals) [3)]	**Q25**		✓	✓	✓	✓	
3 bimetal sensors (NC contacts) for tripping (2 terminals) [3)]	**Q31**		✓	✓	✓	✓	
6 bimetal sensors (NC contacts) for alarm and tripping (4 terminals)	**Q32**		✓	✓	✓	✓	
3 bimetal sensors (NC contacts) for tripping (6 terminals)	**Q33**		O. R.	O. R.	O. R.	O. R.	
1 Pt1000 resistance thermometer (2 terminals) [20)]	**Q35**		✓	✓	✓	✓	
2 Pt1000 resistance thermometers (4 terminals) [20)]	**Q36**		✓	✓	✓	✓	
3 Pt100 resistance thermometers – 2-wire input (6 terminals)	**Q60**		✓	✓	✓	✓	
6 Pt100 resistance thermometers – 2-wire input (12 terminals)	**Q61**	*New!*	✓	✓	✓	✓	
1 Pt100 resistance thermometer – 2-wire input (2 terminals)	**Q62**	*New!*	✓	✓	✓	✓	
3 Pt100 resistance thermometers – 3-wire input (9 terminals)	**Q63**	*New!*	✓	✓	✓	✓	
6 Pt100 resistance thermometers – 3-wire input (18 terminals)	**Q64**	*New!*	✓	✓	✓	✓	
2 Pt100 screw-in thermometers in basic configuration for bearings (2 terminals)	**Q72**	*New!*	O. R.	O. R.	O. R.	O. R.	
2 Pt100 screw-in thermometers in 3-wire input for bearing (6 terminals)	**Q78**	*New!*	O. R.	O. R.	O. R.	O. R.	
2 Pt100 double screw-in thermometers in 3-wire input for bearing (12 terminals)	**Q79**	*New!*	O. R.	O. R.	O. R.	O. R.	
Motor connection and terminal box							
External grounding	**H04**		✓	✓	✓	✓	
Terminal box on NDE [1)]	**H08**		✓	✓	✓	✓	
Rotation of the terminal box through 90°, entry from DE [2)]	**R10**		○	○	○	○	
Rotation of the terminal box through 90°, entry from NDE	**R11**		○	○	○	○	
Rotation of the terminal box through 180°	**R12**		○	○	○	○	
Terminal box in position 0°, connection from right	**R13**	*New!*	○	○	○	–	
One metal cable gland	**R15**		✓	✓	✓	✓	
3 cables protruding, 0.5 m long	**R20**		✓	✓	✓	✓	
6 cables protruding, 0.5 m long	**R22**		✓	✓	✓	✓	
Larger terminal box	**R50**		✓	✓	✓	✓	
Motor connector Han-Drive 10e for 230 VΔ/400 VY	**R70**		✓	✓	✓	–	
Motor connector EMC Han-Drive 10e for 230 VΔ/400 VY	**R71**		✓	✓	✓	–	
Windings and insulation							
Increased air humidity/temperature with 30 to 60 g water per m^3 of air	**N30**		✓	✓	✓	✓	

For legends and footnotes, see page 4/100.

© Siemens AG 2018

Options – 1LE1092 aluminum series

Special versions	Additional identification code **-Z** with order code and plain text if required	Frame size 100	112	132	160	Motor version
		1LE1092				Standard Efficiency
1LE1092-. . . . . -. . . . -Z	Order code					
Colors and paint finish						
Standard paint finish C2 in RAL 7030 stone gray		□	□	□	□	
Unpainted (only cast-iron parts primed)	**S00**	○	○	○	○	
Unpainted, only primed	**S01**	✓	✓	✓	✓	
Special paint finish C3	**S02**	✓	✓	✓	✓	
Special paint finish sea air resistant C4	**S03**	✓	✓	✓	✓	
Internal coating	**S05**	✓	✓	✓	✓	
Paint finish in other standard RAL colors: RAL 1002, 1013, 1015, 1019, 2003, 2004, 3000, 3007, 5002, 5007, 5009, 5010, 5012, 5015, 5017, 5018, 5019, 6011, 6019, 6021, 7000, 7001, 7004, 7011, 7016, 7022, 7031, 7032, 7033, 7035, 9001, 9002, 9005 (see Catalog Section 1 "Introduction")	**Y53 •** and paint finish RAL....	✓	✓	✓	✓	
Paint finish in special RAL colors: For RAL colors, see "Special paint finish in special RAL colors" (see Catalog Section 1 "Introduction")	**Y56 •** and paint finish RAL....	✓	✓	✓	✓	
Modular technology – Basic versions [4]						
Mounting of holding brake (standard assignment) [5]	**F01**	✓	✓	✓	✓	
Mounting of brake for higher switching frequency (operating brake)	**F02**	O. R.	O. R.	O. R.	O. R.	
Mounted separately driven fan	**F70**	✓	✓	✓	✓	
Mounting of 1XP8012-10 (HTL) rotary pulse encoder [6] [7]	**G01**	✓	✓	✓	✓	
Mounting of 1XP8012-20 (TTL) rotary pulse encoder [6] [7]	**G02**	✓	✓	✓	✓	
Modular technology – Additional versions						
Brake supply voltage 24 V DC	**F10**	✓	✓	✓	✓	
Brake supply voltage 230 V AC, 50/60 Hz	**F11**	○	○	○	○	
Brake supply voltage 400 V AC, 50/60 Hz	**F12**	✓	✓	✓	✓	
Mechanical manual brake release with lever (no locking)	**F50**	✓	✓	✓	✓	
Special technology [3]						
Mounting of LL 861 900 220 rotary pulse encoder [6]	**G04**	✓	✓	✓	✓	
Mounting of HOG 9 DN 1024 I rotary pulse encoder [6]	**G05**	✓	✓	✓	✓	
Mounting of HOG 10 D 1024 I rotary pulse encoder [6]	**G06**	✓	✓	✓	✓	
Mechanical version and degrees of protection						
Prepared for mountings, centering hole only [7]	**G40**	✓	✓	✓	✓	
Prepared for mountings with D12 shaft [12]	**G41**	✓	✓	✓	✓	
Prepared for mountings with D16 shaft [12]	**G42**	✓	✓	✓	✓	
Mechanical protection for encoder	**G43**	✓	✓	✓	✓	
Protective cover [6] [8]	**H00**	✓	✓	✓	✓	
Screwed-on (instead of cast) feet	**H01**	✓	✓	✓	✓	
Vibration-proof version; vibration resistance to Class 3M4 according to IEC 60721-3-3:1994	**H02**	✓	✓	✓	✓	
Condensation drainage holes [9]	**H03**	✓	✓	✓	✓	
Rust-resistant screws (externally)	**H07**	✓	✓	✓	✓	
IP65 degree of protection [10]	**H20**	✓	✓	✓	✓	
IP56 degree of protection [11]	**H22**	✓	✓	✓	✓	
Drive-end seal for flange-mounted motors, oil-tight to 0.1 bar [13]	**H23**	✓	✓	✓	✓	
Coolant temperature and installation altitude						
Coolant temperature –40 to +40 °C [19]	**D03**	✓	✓	✓	✓	
Coolant temperature –30 to +40 °C [19]	**D04**	✓	✓	✓	✓	

For legends and footnotes, see page 4/100.

© Siemens AG 2018

Special versions	Additional identification code **-Z** with order code and plain text if required		Frame size 100	112	132	160	Motor version
			1LE1092				Standard Efficiency
1LE1092-. . . . . -. . . . -Z	Order code						
Versions in accordance with standards and specifications							
Version according to UL and CSA (Canadian regulation)	**D39**		✓	✓	✓	✓	
TR CU product safety certificate EAC for Eurasian customs union	**D47**		✓	✓	✓	✓	
Bearings and lubrication							
Located bearing DE	**L20**		✓	✓	✓	✓	
Located bearing NDE	**L21**		✓	✓	✓	□	
Bearing design for increased cantilever forces	**L22**		✓	✓	✓	✓	
Regreasing device [14]	**L23**		✓	✓	✓	✓	
Bearings reinforced at both ends for DE and NDE, bearing size 63	**L25**		✓	✓	✓	✓	
Measuring nipple for SPM shock pulse measurement for bearing inspection [14]	**Q01**		✓	✓	✓	✓	
Balance and vibration severity							
Vibration severity grade A			□	□	□	□	
Half-key balancing (standard)			□	□	□	□	
Balancing without feather key	**L01**		✓	✓	✓	✓	
Full-key balancing	**L02**		✓	✓	✓	✓	
Shaft and rotor							
Shaft extension with standard dimensions, without feather keyway	**L04**		✓	✓	✓	✓	
Standard, cylindrical shaft extension (second shaft extension) NDE acc. to EN 50347	**L05**		✓	✓	✓	✓	
Standard shaft made of stainless steel (e.g. 1.4021)	**L06**		✓	✓	✓	✓	
Concentricity of shaft extension in accordance with DIN 42955 Tolerance R	**L07**		✓	✓	✓	✓	
Concentricity of shaft extension, coaxiality, and linear movement in accordance with DIN 42955 Tolerance R for flange-mounted motors	**L08**		✓	✓	✓	✓	
Non-standard cylindrical shaft extension, DE [15]	**Y58** • and customer specifications		✓	✓	✓	✓	
Non-standard cylindrical shaft extension, NDE [15]	**Y59** • and customer specifications		✓	✓	✓	✓	
Heating and ventilation							
Sheet metal fan cover	**F74**		✓	✓	✓	✓	
Fan cover for textile industry [16]	**F75**		✓	✓	✓	✓	
Metal external fan	**F76**		✓	✓	✓	✓	
Without external fan and without fan cover	**F90**		✓	✓	✓	✓	
Anti-condensation heating for 230 V (2 terminals)	**Q02**		✓	✓	✓	✓	
Anti-condensation heating for 115 V (2 terminals)	**Q03**		✓	✓	✓	✓	
Rating plate and additional rating plates							
Second rating plate, loose	**M10**		✓	✓	✓	✓	
Rating plate, stainless steel	**M11**		✓	✓	✓	✓	
Additional rating plate with customer specifications	**Y82** • and customer specifications		✓	✓	✓	✓	
Additional information on rating plate and on package label (max. 20 characters)	**Y84** • and customer specifications		✓	✓	✓	✓	
Adhesive label, supplied loose (printed with: Article No., Serial No.; 2 lines of text)	**Y85** • and customer specifications		✓	✓	✓	✓	

For legends and footnotes, see page 4/100.

© Siemens AG 2018

Options – 1LE1092 aluminum series

Special versions	Additional identification code **-Z** with order code and plain text if required		Frame size 100	112	132	160	Motor version
			1LE1092				Standard Efficiency
1LE1092-. . . . . -. . . . -Z	Order code						
Packaging, safety notes, documentation and test certificates							
Printed German/English Operating Instructions (compact) enclosed [17]			□	□	□	□	
Printed German/English Operating Instructions (compact) enclosed in each wire-lattice pallet	**B01**		○	○	○	○	
Acceptance test certificate 3.1 according to EN 10204 [18]	**B02**		✓	✓	✓	✓	
Printed German/English Operating Instructions enclosed	**B04**		✓	✓	✓	✓	
Document - Electrical datasheet	**B60**		✓	✓	✓	✓	
Document - Order dimensional drawing	**B61**		✓	✓	✓	✓	
Type test with heat run for horizontal motors, with acceptance	**B83**		✓	✓	✓	✓	
"Basic" documentation package	**B90**	*New!*	✓	✓	✓	✓	
"Advanced" documentation package	**B91**	*New!*	✓	✓	✓	✓	
"Projects" documentation package	**B92**	*New!*	✓	✓	✓	✓	
Wire-lattice pallet packaging	**B99**		○	○	○	○	
Connected in star for shipping	**M01**		✓	✓	✓	✓	
Connected in delta for dispatch	**M02**		✓	✓	✓	✓	

□ Standard version
○ Without additional charge
• This order code only determines the price of the version – Additional plain text is required.
✓ With additional charge
O. R. Possible on request
– Not possible

4

1) For order code **H08** mounting feet dimension deviates from EN 50347. Further information is available in the DT Configurator (see Appendix, "Tools and engineering").

2) With IM B5 flange, only possible in combination with order code **H08**.

3) The grease lifetime specified in Catalog Section 1 "Introduction" refers to CT 40 °C. If the coolant temperature is increased by 10 K, the grease lifetime and regreasing interval are halved.

4) A second shaft extension is not possible. Please inquire for mounted brakes.

5) For order codes **F10**, **F11**, and **F12**, the brake supply voltage must be specified or ordered.

6) In combination with a separately driven fan (order code **F70**) the 1XP8032-10 rotary pulse encoder is used instead of 1XP8012-10 or 1XP8032-20 is used instead of 1XP8012-20.

7) As standard, motors that are prepared for additional mounted components (order codes **G40**, **G41**, **G42**) are shipped without protective cover. If a protective cover is requested as a cover or mechanical protection for mounted components provided by the customer, this can be ordered with order code **G43**. In combination with a separately driven fan (order code **F70**) the 1XP8032-10 rotary pulse encoder is used instead of 1XP8012-10 or 1XP8032-20 is used instead of 1XP8012-20.

8) Order code **H00** provides mechanical protection for encoders.

9) Supplied with the condensation drainage holes sealed at the drive end DE and non-drive end NDE (IP55, IP56, IP65). If the condensation drainage holes are required for motors of the IM B6, IM B7 or IM B8 type of construction (feet on side or top), the motors must be ordered in the respective type of construction and with order code **H03**, so that the condensation drainage holes will be placed in the correct position.

10) Not possible in combination with HOG 9 DN 1024 I rotary pulse encoder (order code **G05**) and/or brake 2LM8 (order code **F01**).

11) Not possible in combination with 2LM8 brake (order code **F01**).

12) As standard, motors that are prepared for additional mounted components (order codes **G40**, **G41**, **G42**) are shipped without protective cover. If a protective cover is requested as a cover or mechanical protection for mountings provided by the customer, this can be ordered with order code **G43**.

13) Not possible for type of construction IM V3.

14) Not possible when a brake is mounted.

15) When motors are ordered that have a longer or shorter shaft extension than normal, the required position and length of the feather keyway must be specified in a sketch. It must be ensured that only feather keys in accordance with DIN 6885, Form A are permitted to be used. The feather keyway is positioned centrally on the shaft extension. The length is defined by the manufacturer in accordance with the appropriate standard. Not valid for: Tapered shafts, non-standard threaded journals, non-standard shaft tolerances, friction welded journals, extremely "thin" shafts, special geometry dimensions (e.g. square journals), hollow shafts. Valid for non-standard shaft extensions DE or NDE. The feather keys are supplied in every case. For order codes **Y58**, **Y59** and **L05** the following applies:
- Dimensions D and DA ≤ ball bearing inner diameter (see dimension tables for "Dimensions")
- Dimensions E and EA ≤ 2 × length E (standard) of the shaft extension.
For an explanation of the order codes, see Catalog Section 1 "Introduction".

16) The special requirements of the textile industry regarding the sheet metal cover open up the possibility that a finger may be inserted between the cover and housing. The customer must implement appropriate measures to ensure that the installed system is "finger-safe".

17) The Operating Instructions (compact) are available in PDF format for all official EU languages at http://support.automation.siemens.com/WW/view/en/40761976.

18) The delivery time for the factory test certificate may differ from the delivery time for the motor and will be dispatched by e-mail.

19) In connection with mountings, the respective technical specifications must be observed, please inquire before ordering.

20) Not possible in combination with UL.

© Siemens AG 2018

Selection and ordering data

Special versions	Additional identification code **-Z** with order code and plain text if required	Frame size										Motor version	
		100	**112**	**132**	**160**	**180**	**200**	**225**	**250**	**280**	**315**		
		1LE1592										Standard Efficiency	
1LE1592-. . . . . -. . . . -Z	Order code												
Motor protection													
1 or 3 PTC thermistors – for tripping (2 terminals) [2) 3)]	**Q11**	✓	✓	✓	✓	✓	✓	✓	✓	✓	✓		
2 or 6 PTC thermistors – for alarm and tripping (4 terminals) [3)]	**Q12**	✓	✓	✓	✓	✓	✓	✓	✓	✓	✓		
1 KTY84-130 temperature sensor (2 terminals) [3)]	**Q23**	✓	✓	✓	✓	✓	✓	✓	✓	✓	✓		
2 KTY84-130 temperature sensor (4 terminals) [3)]	**Q25**	✓	✓	✓	✓	✓	✓	✓	✓	✓	✓		
3 bimetal sensors (NC contacts) for tripping (2 terminals) [3)]	**Q31**	✓	✓	✓	✓	✓	✓	✓	✓	✓	✓		
6 bimetal sensors (NC contacts) for alarm and tripping (4 terminals)	**Q32**	✓	✓	✓	✓	✓	✓	✓	✓	✓	✓	Only for:	Voltage code 2-1 (12th and 13th position of the Article No.)
3 bimetal sensors (NC contacts) for tripping (6 terminals)	**Q33**	✓	✓	✓	✓	✓	✓	✓	✓	✓	✓		
6 bimetal sensors (NC contacts) thermostat for alarm and tripping (12 terminals)	**Q34**	–	–	–	–	✓	✓	✓	✓	✓	✓		
1 Pt1000 resistance thermometer (2 terminals) [21)]	**Q35**	✓	✓	✓	✓	✓	✓	✓	✓	✓	✓		
2 Pt1000 resistance thermometer (4 terminals) [21)]	**Q36**	✓	✓	✓	✓	✓	✓	✓	✓	✓	✓		
3 Pt100 resistance thermometers – 2-wire input (6 terminals)	**Q60**	✓	✓	✓	✓	✓	✓	✓	✓	✓	✓		
1 Pt100 resistance thermometer – 2-wire input (2 terminals)	**Q62**	✓	✓	✓	✓	✓	✓	✓	✓	✓	✓		
3 Pt100 resistance thermometers – 3-wire input (9 terminals)	**Q63**	✓	✓	✓	✓	✓	✓	✓	✓	✓	✓		
6 Pt100 resistance thermometers – 3-wire input (18 terminals)	**Q64**	✓	✓	✓	✓	✓	✓	✓	✓	✓	✓		
2 Pt100 screw-in thermometers in basic configuration for bearing (2 terminals) [1)]	**Q72**	–	–	–	–	✓	✓	✓	✓	✓	✓		
2 Pt100 screw-in thermometers in 3-wire input for bearing (6 terminals)	**Q78**	–	–	–	–	✓	✓	✓	✓	✓	✓		
2 Pt100 double screw-in thermometers in 3-wire input for bearing (12 terminals)	**Q79**	–	–	–	–	✓	✓	✓	✓	✓	✓		
Motor connection and terminal box													
External grounding	**H04**	✓	✓	✓	✓	□	□	□	□	□	□		
Terminal box on NDE [2)]	**H08**	✓	✓	✓	✓	✓	✓	✓	✓	✓	✓		
Second external grounding	**H70**	✓	✓	✓	✓	✓	✓	✓	✓	✓	✓		
Rotation of the terminal box through 90°, entry from DE	**R10**	✓	✓	✓	✓	✓	✓	✓	✓	✓	✓		
Rotation of the terminal box through 90°, entry from NDE	**R11**	✓	✓	✓	✓	✓	✓	✓	✓	✓	✓		
Rotation of the terminal box through 180°	**R12**	○	○	○	○	✓	✓	✓	✓	✓	✓		
One EMC cable gland	**R14**	–	–	–	–	✓	✓	✓	✓	✓	✓		
One metal cable gland	**R15**	✓	✓	✓	✓	✓	✓	✓	✓	✓	✓		
EMC cable gland, maximum configuration	**R16**	–	–	–	–	✓	✓	✓	✓	✓	✓		
Stud terminal for cable connection, accessories pack (3 items)	**R17**	–	–	–	–	–	–	–	✓	✓	✓		
Saddle terminal for connection without cable lug, accessories pack	**R19**	–	–	–	–	–	–	–	✓	✓	✓		
Larger terminal box	**R50**	✓	✓	✓	✓	✓	✓	✓	✓	✓	✓		
Terminal box without cable entry opening	**R51**	○	○	○	○	○	○	○	○	○	○		
Drilled removable entry plate	**R52**	–	–	–	–	✓	✓	✓	✓	✓	✓		
Undrilled removable entry plate	**R53**	–	–	–	–	✓	✓	✓	✓	✓	✓		

For legend, see page 4/104, for footnotes, see page 4/105.

© Siemens AG 2018

Options – 1LE1592 cast-iron series

Special versions	Additional identification code **-Z** with order code and plain text if required	Frame size 100	112	132	160	180	200	225	250	280	315	Motor version
		1LE1592										Standard Efficiency
1LE1592-. . . . . -. . . . -Z	Order code											
Motor connection and terminal box (continued)												
Cast iron auxiliary terminal box (small)	**R62**	✓	✓	✓	✓	✓	✓	✓	✓	✓	✓	
Silicone-free version	**R74**	□	□	□	□	□	□	□	✓	✓	✓	
Non-standard threaded through hole (NPT or G thread)	**Y61 •** and customer specifications	✓	✓	✓	✓	✓	✓	✓	✓	✓	✓	
Windings and insulation												
Increased air humidity/temperature with 30 to 60 g water per m3 of air	**N30**	✓	✓	✓	✓	✓	✓	✓	✓	✓	✓	
Increased air humidity/temperature with 60 to 100 g water per m3 of air	**N31**	✓	✓	✓	✓	✓	✓	✓	✓	✓	✓	
Colors and paint finish												
Standard paint finish C2 in RAL 7030 stone gray		□	□	□	□	□	□	□	□	□	□	
Unpainted (only cast-iron parts primed)	**S00**	○	○	○	○	○	○	○	○	○	○	
Unpainted, only primed	**S01**	✓	✓	✓	✓	✓	✓	✓	✓	✓	✓	
Special paint finish C3	**S02**	✓	✓	✓	✓	✓	✓	✓	✓	✓	✓	
Special paint finish sea air resistant C4	**S03**	✓	✓	✓	✓	✓	✓	✓	✓	✓	✓	
Special paint finish for use offshore C5	**S04**	✓	✓	✓	✓	✓	✓	✓	✓	✓	✓	
Internal coating	**S05**	✓	✓	✓	✓	✓	✓	✓	✓	✓	✓	
Paint finish in other standard RAL colors: RAL 1002, 1013, 1015, 1019, 2003, 2004, 3000, 3007, 5002, 5007, 5009, 5010, 5012, 5015, 5017, 5018, 5019, 6011, 6019, 6021, 7000, 7001, 7004, 7011, 7016, 7022, 7031, 7032, 7033, 7035, 9001, 9002, 9005 (see Catalog Section 1 "Introduction")	**Y53 •** and paint finish RAL....	✓	✓	✓	✓	✓	✓	✓	✓	✓	✓	
Paint finish in special RAL colors: For RAL colors, see "Special paint finish in special RAL colors" (see Catalog Section 1 "Introduction")	**Y56 •** and paint finish RAL....	✓	✓	✓	✓	✓	✓	✓	✓	✓	✓	
Modular technology – Basic versions [4]												
Mounting of holding brake (standard assignment) [5]	**F01**	✓	✓	✓	✓	✓	✓	✓	✓	✓	✓	
Mounted separately driven fan	**F70**	✓	✓	✓	✓	✓	✓	✓	✓	✓	✓	
Mounting of 1XP8012-10 (HTL) rotary pulse encoder [6] [7]	**G01**	✓	✓	✓	✓	✓	✓	✓	✓	✓	✓	
Mounting of 1XP8012-20 (TTL) rotary pulse encoder [6] [7]	**G02**	✓	✓	✓	✓	✓	✓	✓	✓	✓	✓	
Modular technology – Additional versions												
Brake supply voltage 24 V DC	**F10**	✓	✓	✓	✓	✓	✓	✓	✓	✓	✓	
Brake supply voltage 230 V AC, 50/60 Hz	**F11**	○	○	○	○	○	○	○	○	○	○	
Brake supply voltage 400 V AC, 50/60 Hz	**F12**	✓	✓	✓	✓	✓	✓	✓	✓	✓	✓	
Mechanical manual brake release with lever (no locking)	**F50**	✓	✓	✓	✓	✓	✓	✓	✓	✓	✓	
Special technology [5]												
Mounting of LL 861 900 220 rotary pulse encoder [8]	**G04**	✓	✓	✓	✓	✓	✓	✓	✓	✓	✓	
Mounting of HOG 9 DN 1024 I rotary pulse encoder [8]	**G05**	✓	✓	✓	✓	✓	✓	✓	✓	✓	✓	
Mounting of HOG 10 D 1024 I rotary pulse encoder [8]	**G06**	✓	✓	✓	✓	✓	✓	✓	✓	✓	✓	
Mounting of POG10D rotary pulse encoder (only in combination with separately driven fan or brake) [9]	**G07**	–	–	–	–	✓	✓	✓	✓	✓	✓	
Mounting of POG9 rotary pulse encoder (only in combination with separately driven fan or brake) [9]	**G08**	–	–	–	–	✓	✓	✓	✓	✓	✓	
Mounting of a special type of rotary pulse encoder	**Y70 •** and customer specifications	–	–	–	–	O. R.	O. R.	O. R.	O. R.	O. R.	O. R.	

For legend, see page 4/104, for footnotes, see page 4/105.

© Siemens AG 2018

Special versions	Additional identification code **-Z** with order code and plain text if required	Frame size 100	112	132	160	180	200	225	250	280	315	Motor version
		1LE1592										Standard Efficiency
1LE1592-. . . . . -. . . . -Z	Order code											
Mechanical version and degrees of protection												
Prepared for mountings, centering hole only	**G40**	✓	✓	✓	✓	□	□	□	□	□	□	
Prepared for mountings with D12 shaft	**G41**	✓	✓	✓	✓	✓	✓	✓	✓	✓	✓	
Prepared for mountings with D16 shaft	**G42**	✓	✓	✓	✓	✓	✓	✓	✓	✓	✓	
Mechanical protection for encoder	**G43**	✓	✓	✓	✓	✓	✓	✓	✓	✓	✓	
Protective cover [6) 8) 10)]	**H00**	✓	✓	✓	✓	✓	✓	✓	✓	✓	✓	
Screwed-on (instead of cast) feet	**H01**	✓	✓	✓	✓	✓	✓	✓	✓	✓	✓	
Vibration-proof version; vibration resistance to Class 3M4 according to IEC 60721-3-3:1994	**H02**	✓	✓	✓	✓	✓	✓	✓	✓	✓	✓	
Condensation drainage holes		□	□	□	□	□	□	□	□	□	□	
Rust-resistant screws (externally)	**H07**	✓	✓	✓	✓	✓	✓	✓	✓	✓	✓	
IP65 degree of protection [11)]	**H20**	✓	✓	✓	✓	✓	✓	✓	✓	✓	✓	
IP54 degree of protection	**H21**	–	–	–	–	✓	✓	✓	✓	✓	✓	
IP56 degree of protection [12)]	**H22**	✓	✓	✓	✓	✓	✓	✓	✓	✓	✓	
Drive-end seal for flange-mounted motors, oil-tight to 0.1 bar [13)]	**H23**	✓	✓	✓	✓	✓	✓	✓	✓	✓	✓	
Grounding brush for converter operation	**L52**	–	–	–	–	–	–	–	–	✓	✓	
Coolant temperature and installation altitude												
Coolant temperature –50 to +40 °C	**D02**	✓	✓	✓	✓	✓	✓	✓	✓	✓	✓	
Coolant temperature –40 to +40 °C [14)]	**D03**	✓	✓	✓	✓	✓	✓	✓	✓	✓	✓	
Coolant temperature –30 to +40 °C	**D04**	✓	✓	✓	✓	✓	✓	✓	✓	✓	✓	
Versions in accordance with standards and specifications												
Version according to UL and CSA (Canadian regulation)	**D39**	✓	✓	✓	✓	✓	✓	✓	✓	✓	✓	
TR CU product safety certificate EAC for Eurasian customs union	**D47**	✓	✓	✓	✓	✓	✓	✓	✓	✓	✓	
Bearings and lubrication												
Located bearing DE	**L20**	✓	✓	✓	✓	✓	✓	✓	✓	✓	✓	
Located bearing NDE	**L21**	✓	✓	✓	□	□	□	□	□	□	□	
Bearing design for increased cantilever forces	**L22**	✓	✓	✓	✓	✓	✓	✓	✓	✓	✓	
Regreasing device [15)]	**L23**	✓	✓	✓	✓	✓	✓	✓	✓	□	□	
Bearings reinforced at both ends for DE and NDE, bearing size 63 [16)]	**L25**	✓	✓	✓	✓	✓	✓	✓	✓	□	□	
Reinforced bearings at both DE and NDE, DE bearing for increased cantilever forces	**L28**	–	–	–	–	✓	✓	✓	✓	–	–	
Bearing insulation DE	**L50**	–	–	–	–	–	–	✓	✓	✓	✓	
Bearing insulation NDE	**L51**	✓	✓	✓	✓	✓	✓	✓	✓	✓	✓	
Measuring nipple for SPM shock pulse measurement for bearing inspection [15)]	**Q01**	✓	✓	✓	✓	✓	✓	✓	✓	✓	✓	
Balance and vibration severity												
Vibration severity grade A		□	□	□	□	□	□	□	□	□	□	
Half-key balancing (standard)		□	□	□	□	□	□	□	□	□	□	
Balancing without feather key	**L01**	✓	✓	✓	✓	✓	✓	✓	✓	✓	✓	
Full-key balancing	**L02**	✓	✓	✓	✓	✓	✓	✓	✓	✓	✓	
Shaft and rotor												
Shaft extension with standard dimensions, without feather keyway	**L04**	✓	✓	✓	✓	✓	✓	✓	✓	✓	✓	
Standard, cylindrical shaft extension (second shaft extension) NDE acc. to EN 50347	**L05**	✓	✓	✓	✓	✓	✓	✓	✓	✓	✓	
Standard shaft made of stainless steel (e.g. 1.4021)	**L06**	✓	✓	✓	✓	✓	✓	✓	✓	✓	✓	
Concentricity of shaft extension in accordance with DIN 42955 Tolerance R	**L07**	✓	✓	✓	✓	✓	✓	✓	✓	✓	✓	
Concentricity of shaft extension, coaxiality and linear movement in accordance with DIN 42955 Tolerance R for flange-mounted motors	**L08**	✓	✓	✓	✓	✓	✓	✓	✓	✓	✓	

For legend, see page 4/104, for footnotes, see page 4/105.

© Siemens AG 2018

Options – 1LE1592 cast-iron series

Special versions	Additional identification code **-Z** with order code and plain text if required		Frame size 100	112	132	160	180	200	225	250	280	315	Motor version
			1LE1592										Standard Efficiency
1LE1592-. . . . . -. . . . -Z	Order code												
Shaft and rotor (continued)													
Non-standard cylindrical shaft extension, DE [17]	**Y58** • and customer specifications		✓	✓	✓	✓	✓	✓	✓	✓	✓	✓	
Non-standard cylindrical shaft extension, NDE [17]	**Y59** • and customer specifications		✓	✓	✓	✓	✓	✓	✓	✓	✓	✓	
Special shaft steel	**Y60** • and customer specifications		O. R.	O. R.	O. R.	O. R.	O. R.	O. R.	O. R.	O. R.	O. R.	O. R.	
Heating and ventilation													
Sheet metal fan cover	**F74**		✓	✓	✓	✓	✓	✓	✓	✓	✓	✓	
Metal external fan	**F76**		✓	✓	✓	✓	✓	✓	✓	✓	✓	✓	
Anti-condensation heating for 230 V (2 terminals)	**Q02**		✓	✓	✓	✓	✓	✓	✓	✓	✓	✓	
Anti-condensation heating for 115 V (2 terminals)	**Q03**		✓	✓	✓	✓	✓	✓	✓	✓	✓	✓	
Separately driven fan with non-standard voltage and/or frequency	**Y81** • and customer specifications		–	–	–	–	–	–	✓	✓	✓	✓	
Rating plate and additional rating plates													
Second rating plate, loose	**M10**		✓	✓	✓	✓	✓	✓	✓	✓	✓	✓	
Rating plate, stainless steel	**M11**		✓	✓	✓	✓	✓	✓	✓	✓	✓	✓	
Additional rating plate with customer specifications	**Y82** • and customer specifications		✓	✓	✓	✓	✓	✓	✓	✓	✓	✓	
Additional information on rating plate and on package label (max. 20 characters)	**Y84** • and customer specifications		✓	✓	✓	✓	✓	✓	✓	✓	✓	✓	
Adhesive label, supplied loose (printed with: Article No., Serial No.; 2 lines of text)	**Y85** • and customer specifications		✓	✓	✓	✓	✓	✓	✓	✓	✓	✓	
Extension of the liability for defects													
Extension of the liability for defects by 12 months to a total of 24 months (2 years) from delivery [18]	**Q80**		–	–	–	–	✓	✓	✓	✓	✓	✓	
Extension of the liability for defects by 24 months to a total of 36 months (3 years) from delivery [18]	**Q82**		–	–	–	–	✓	✓	✓	✓	✓	✓	
Packaging, safety notes, documentation and test certificates													
Acceptance test certificate 3.1 according to EN 10204 [19]	**B02**		✓	✓	✓	✓	✓	✓	✓	✓	✓	✓	
Printed German/English Operating Instructions enclosed [20]	**B04**		✓	✓	✓	✓	✓	✓	✓	✓	✓	✓	
Document - Electrical datasheet	**B60**		✓	✓	✓	✓	✓	✓	✓	✓	✓	✓	
Document - Order dimensional drawing	**B61**		✓	✓	✓	✓	✓	✓	✓	✓	✓	✓	
Standard test (routine test) with acceptance	**B65**		✓	✓	✓	✓	✓	✓	✓	✓	✓	✓	
Type test with heat run for horizontal motors, with acceptance	**B83**		✓	✓	✓	✓	✓	✓	✓	✓	✓	✓	
"Basic" documentation package	**B90**	*New!*	✓	✓	✓	✓	✓	✓	✓	✓	✓	✓	
"Advanced" documentation package	**B91**	*New!*	✓	✓	✓	✓	✓	✓	✓	✓	✓	✓	
"Projects" documentation package	**B92**	*New!*	✓	✓	✓	✓	✓	✓	✓	✓	✓	✓	
Connected in star for shipping	**M01**		✓	✓	✓	✓	✓	✓	✓	✓	✓	✓	
Connected in delta for dispatch	**M02**		✓	✓	✓	✓	✓	✓	✓	✓	✓	✓	

□ Standard version
○ Without additional charge
• This order code only determines the price of the version – Additional plain text is required.
✓ With additional charge
O. R. Possible on request
– Not possible

For footnotes, see page 4/105.

© Siemens AG 2018

1) Evaluation with associated tripping unit (see Catalog IC 10) is recommended.

2) For order code **H08** mounting feet dimension deviates from EN 50347. Further information is available in the DT Configurator (see Appendix, "Tools and engineering").

3) The grease lifetime specified in Catalog Section 1 "Introduction" refers to CT 40 °C. If the coolant temperature is increased by 10 K, the grease lifetime and regreasing interval are halved.

4) A second shaft extension is not possible. Please inquire for mounted brakes.

5) For order codes **F10**, **F11**, and **F12**, the brake supply voltage must be specified or ordered.

6) The 1XP8 rotary pulse encoders are fitted with a protective cover as standard. The protective cover is omitted at the factory when a rotary pulse encoder is combined with a separately driven fan, because in this case the rotary pulse encoder is installed under the fan cover.

7) In combination with a separately driven fan (order code **F70**) the 1XP8032-10 rotary pulse encoder is used instead of 1XP8012-10 or 1XP8032-20 is used instead of 1XP8012-20.

8) LL and HOG rotary pulse encoders up to frame size 160 are fitted with a protective cover as standard. The protective cover is omitted at the factory when a rotary pulse encoder is combined with a separately driven fan, because in this case the rotary pulse encoder is installed under the fan cover.

9) Option (encoder mounting) is only possible for motors with a mounted separately driven fan or for naturally cooled motors (without an external fan). This option can be used in combination with brakes of type KFB. This option cannot be used in combination with brakes of type 2LM8.

10) Order code **H00** provides mechanical protection for encoders.

11) Not possible in combination with HOG 9 DN 1024 I rotary pulse encoder (order code **G05**) and/or brake 2LM8 (order code **F01**).

12) Not possible in combination with 2LM8 brake (order code **F01**).

13) Not possible for type of construction IM V3.

14) In connection with mountings, the respective technical specifications must be observed, please inquire before ordering.

15) Up to frame size 160 not possible when brake is mounted.

16) Standard version for motors from frame size 280 and higher.

17) When motors are ordered that have a longer or shorter shaft extension than normal, the required position and length of the feather keyway must be specified in a sketch. It must be ensured that only feather keys in accordance with DIN 6885, Form A are permitted to be used. The feather keyway is positioned centrally on the shaft extension. The length is defined by the manufacturer in accordance with the appropriate standard. Not valid for: Conical shafts, non-standard threaded journals, non-standard shaft tolerances, friction welded journals, extremely "thin" shafts, special geometry dimensions (e.g. square journals), hollow shafts. Valid for non-standard shaft extensions DE or NDE. The feather keys are supplied in every case. For order codes **Y58**, **Y59** and **L05** the following applies:
- Dimensions D and DA ≤ ball bearing inner diameter (see dimension tables for "Dimensions")
- Dimensions E and EA ≤ 2 × length E (standard) of the shaft extension.
For an explanation of the order codes, see Catalog Section 1 "Introduction".

18) Wearing parts (bearings) are excluded from the warranty extension.

19) The delivery time for the factory test certificate may differ from the delivery time for the motor.

20) The Operating Instructions (Compact) are available in PDF format for all official EU languages at http://support.automation.siemens.com/WW/view/en/10803948/133300.

21) Not possible in combination with UL.

© Siemens AG 2018

Overview

Slide rails with fixing bolts and tensioning screws according to DIN 42923

Slide rails are used to tension the belt of a machine easily and conveniently when there is no belt-tensioning pulley. They are fixed to the base using stone bolts or foundation blocks.

The assignment of slide rails to motor size can be found in DIN 42923. For motors of frame sizes 355 to 450, there are no standardized slide rails (please inquire).

Available from:

Lütgert & Co. GmbH
Postfach 42 51
33276 Gütersloh, Germany
Phone +49 (5241) 7407-0
Fax +49 (5241) 7407-90

www.luetgert-antriebe.de
Email: info@luetgert-antriebe.de

Foundation block according to DIN 799

The foundation blocks are inserted into the stone foundation and embedded in concrete. They are used for fixing machines of medium size, slide rails, pedestal bearings, base frames, etc. After the fixing bolts have been unscrewed, the machines can be shifted without them having to be lifted.

When the machine is initially installed, the foundation block that is bolted to the machine (without washers) and fitted with taper pins is not embedded with concrete until the machine has been fully aligned. In this case, the machine is positioned 2 to 3 mm lower. The difference in shaft height is compensated by inserting shims on final installation. The taper pins safeguard the exact position of the machine when it is repeatedly removed and replaced without the need for realignment.

Available from:

Lütgert & Co. GmbH
Postfach 42 51
33276 Gütersloh, Germany
Phone +49 (5241) 7407-0
Fax +49 (5241) 7407-90

www.luetgert-antriebe.de
Email: info@luetgert-antriebe.de

Taper pins according to DIN 258 with threaded ends and constant taper lengths

Taper pins are used for components that are repeatedly removed. The drilled hole is conically ground using a conical reamer until the pin can be pushed in by hand until the cone shoulder lies approx. 3 to 4 mm above the rim of the hole.

It can then be driven in using a hammer until it is correctly seated. The pin is removed from the drilled hole by screwing on the nut and tightening it.

Standardized taper pins are commercially available.

For instance, available from:

Otto Roth GmbH & Co. KG
Rutesheimer Strasse 22
70499 Stuttgart, Germany
Phone +49 (711) 1388-0
Fax. +49 (711) 1388-233

www.ottoroth.de
Email: info@ottoroth.de

Couplings

The motor from Siemens is connected to the machine or gear unit through a coupling. Siemens is an important coupling manufacturer with a wide range of products.

For standard applications, Siemens recommends that flexible couplings, types N-EUPEX and RUPEX or torsionally rigid couplings, types ARPEX and ZAPEX are used. For special applications, FLUDEX and ELPEX-S couplings are recommended.

Available from:

Siemens contact partner - ordering from catalog
Siemens MD 10.1 "FLENDER Standard Couplings"

or

Siemens AG
Kupplungswerk Mussum
Industriepark Bocholt
Schlavenhorst 100
46395 Bocholt, Germany
Phone +49 (2871) 922185
Fax +49 (2871) 922579

www.siemens.com
Email: flendercouplings@siemens.com

© Siemens AG 2018

More information

Replacement motors and repair parts

- Commitment to provide replacement motors and repair parts following delivery of the motor:
  - For up to 3 years after delivery of the original motor, in the event of total motor failure, Siemens will supply a comparable spare motor with regard to the mounting dimensions and functions (the type series may vary).
  - If a spare motor is provided within the 3-year period, this will not mean that the warranty restarts.
  - Replacement motors delivered after the active production of the machine series are also identified as spare motors on the rating plate.
  - Spare parts are offered only for these spare motors on request; repair and replacement are not possible.
  - After a period of 3 years (after the delivery of the original motor), it is only possible to repair these motors (depending on the availability of the spare parts required).
  - For up to 5 years after the delivery of the original motor, spare parts will be available and for a further 5 years, Siemens will provide information about spare parts and will supply documents when required.
- When repair parts are ordered, the following details must be provided:
  - Designation and part number
  - Article No. and factory number of the motor.
- For bearing types, see Catalog Section 1 "Introduction".
- For standard components, a commitment to supply repaired parts does not apply.
- Support hotline
  In Germany
  Phone +49 (0) 911 895 7222

You will find telephone numbers for other countries on our Internet site:
www.siemens.com/automation/service&support

© Siemens AG 2018

Overall dimensions

Overview

Overall dimensions

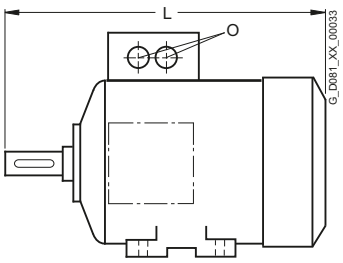

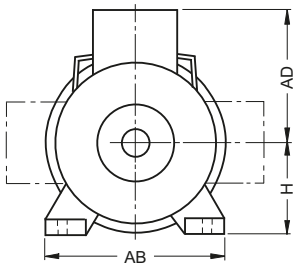

Frame size	Type	Dimension				
		L	AD	H	AB	O
100 L	Aluminum series, self-ventilated					
	1LE1092	395.5 [1]	166	100	196	2 × M32 × 1.5
	Cast-iron series, self-ventilated					
	1LE1592	397.5	193	100	196	2 × M32 × 1.5
112 M	Aluminum series, self-ventilated					
	1LE1092	389 [1]	177	112	226	2 × M32 × 1.5
	Cast-iron series, self-ventilated					
	1LE1592	390.5	195	112	226	2 × M32 × 1.5
132 S/M	Aluminum series, self-ventilated					
	1LE1092	465 [1]	202	132	256	2 × M32 × 1.5
	Cast-iron series, self-ventilated					
	1LE1592	466.5	214.5	132	256	2 × M32 × 1.5
160 M/L	Aluminum series, self-ventilated					
	1LE1092	604 [1]	236.5	160	300	2 × M40 × 1.5
	Cast-iron series, self-ventilated					
	1LE1592	606	265	160	300	2 × M40 × 1.5
180 M/L	Cast-iron series, self-ventilated					
	1LE1592-1EA2 1EB2,1EB4	668 698	286	180	339	2 × M40 × 1.5

Frame size	Type	Dimension				
		L	AD	H	AB	O
200 L	Cast-iron series, self-ventilated					
	1LE1592-2AA4, 2AA5, 2AB5	721	315	200	378	2 × M50 × 1.5
225 S	Cast-iron series, self-ventilated					
	1LE1592-2BB0	788	338	225	436	2 × M50 × 1.5
225 M	Cast-iron series, self-ventilated					
	1LE1592-2BA2, 2BB2	848	338	225	436	2 × M50 × 1.5
250 M	Cast-iron series, self-ventilated					
	1LE1592-2CA2, 2CB2	887	410	250	490	2 × M63 × 1.5
280 S/M	Cast-iron series, self-ventilated					
	1LE1592-2DA0, 2DA2, 2DB0, 2DB2	960	433	280	540	2 × M63 × 1.5
315 S	Cast-iron series, self-ventilated					
	1LE1592-3AB0	1082	515	315	610	2 × M63 × 1.5
315 M	Cast-iron series, self-ventilated					
	1LE1592-3AB2	1247	515	315	610	2 × M63 × 1.5
315 L	Cast-iron series, self-ventilated					
	1LE1592-3AB4, 3AB5	1402	515	315	610	2 × M63 × 1.5

[1] The length is specified as far as the tip of the fan cover.

© Siemens AG 2018

Overview (continued)

Notes on the dimensions

- Dimensional drawings according to EN 50347 and IEC 60072.
- Fits
  The shaft extensions specified in the dimension tables (DIN 748) and centering spigot diameters (EN 50347) are machined with the following fits:

Dimension designation	ISO fit DIN ISO 286-2	
D, DA	to 30	j6
	over 30 to 50	k6
	over 50	m6
N	to 250	j6
	over 250	h6
F, FA		h9
K		H17
S	flange (FF)	H17

  The drilled holes of couplings and belt pulleys should have an ISO fit of at least H7.
- Dimension tolerances
  For the following dimensions, the admissible deviations are given below:

Dimension designation	Dimension	Admissible deviation
H	to 250	– 0.5
	over 250	– 1.0
E, EA		– 0.5

  Keyways and feather keyways (dimensions GA, GC, F and FA) are made in compliance with DIN 6885 Part 1.
- All dimensions are specified in mm.

Dimension sheet generator

(part of the DT Configurator)

A dimensional drawing can be created in the DT Configurator for every configurable motor. A dimensional drawing can be requested for every other motor.

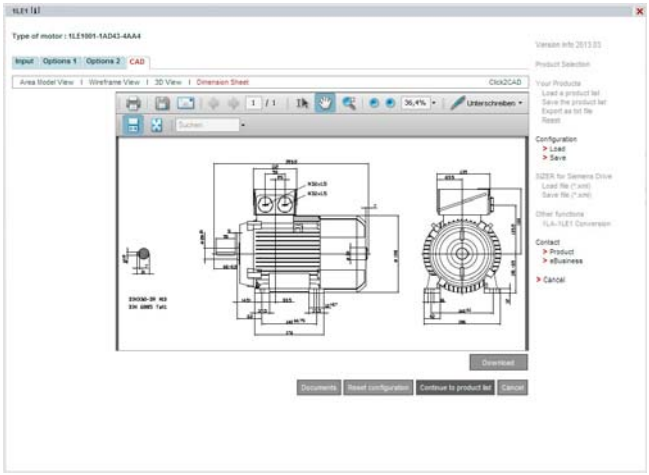

When a complete Article No. is entered with or without order codes, a dimensional drawing can be called up under the "Documentation" tab.

These dimensional drawings can be presented in different views and sections and printed.
The corresponding dimension sheets can be exported, saved and processed further in DXF format (interchange/import format for CAD systems) or as bitmap graphics.

Online access in the Siemens Industry Mall

The DT Configurator is integrated in the Siemens Industry Mall and can be used on the Internet without installation.
German: www.siemens.de/dt-konfigurator
English: www.siemens.com/dt-configurator

Offline access in the Interactive Catalog CA 01

The DT Configurator is also integrated on the DVD of the Interactive Catalog CA 01 – the offline version of Siemens Industry Mall. CA 01 can be ordered from the relevant Siemens sales office or via the Internet:
www.siemens.com/automation/CA01

© Siemens AG 2018

Dimensional drawings

Type of construction IM B3

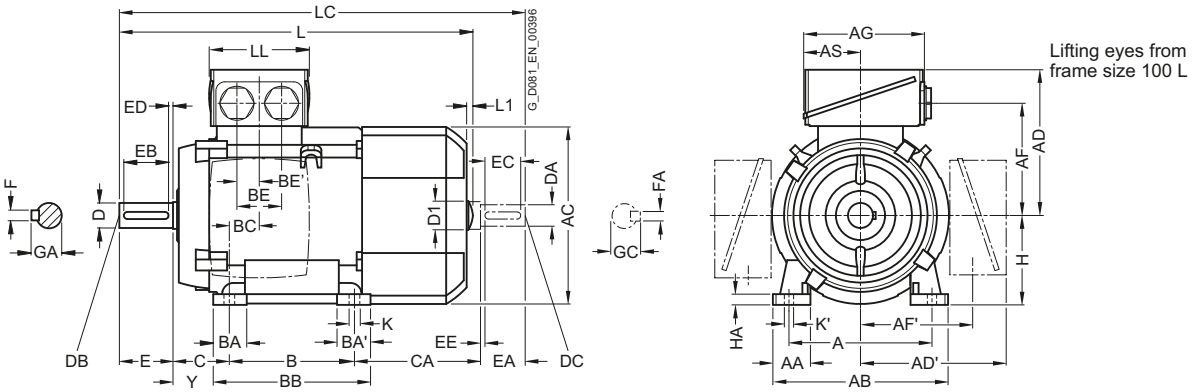

Types of construction IM B5 and IM V1

For flange dimensions, see page 1/53 (**Z** = the number of retaining holes)

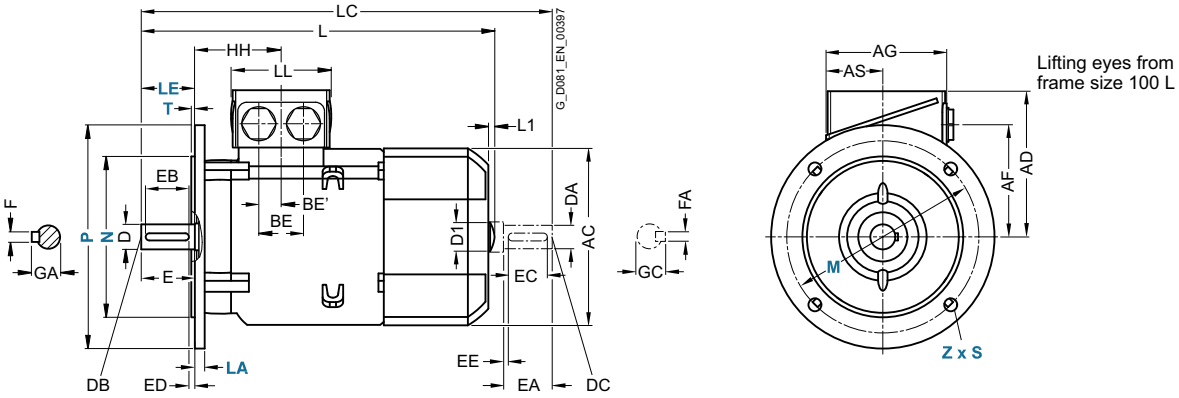

For motor			Dimension designation acc. to **IEC**																				
Frame size	Motor type 1LE1092	No. of poles	A	AA	AB	AC	AD	AD'	AF	AF'	AG	AS	B	BA	BA'	BB	BC	BE	BE'	C	CA	H	HA	Y
100 L	All	2, 4	160	42	196	198	166	166	125.5	125.5	135	63.5	140	37.5	37.5	176	33.5	50	25	63	141	100	12	45
112 M	All	2, 4	190	46	226	222	177	177	136.5	136.5	135	63.5	140	37.5	37.5	176	26	50	25	70	129.7	112	12	52
132 S	All	2, 4	216	53	256	262	202	202	159.5	159.5	155	70.5	140	38	76	218	26.5	48	24	89	128.5	132	15	69
132 M	All	2, 4	216	53	256	262	202	202	159.5	159.5	155	70.5	178	38	76	218	26.5	48	24	89	128.5	132	15	69
160 M	All	2, 4	254	60	300	314	236.5	236.5	190	190	175	77.5	210	44	89	300	47	57	28.5	108	148	160	18	85
160 L	All	2, 4	254	60	300	314	236.5	236.5	190	190	175	77.5	254	44	89	300	47	57	28.5	108	148	160	18	85

© Siemens AG 2018

Dimensional drawings (continued)

Type of construction IM B35

For flange dimensions, see page 1/53 (**Z** = the number of retaining holes)

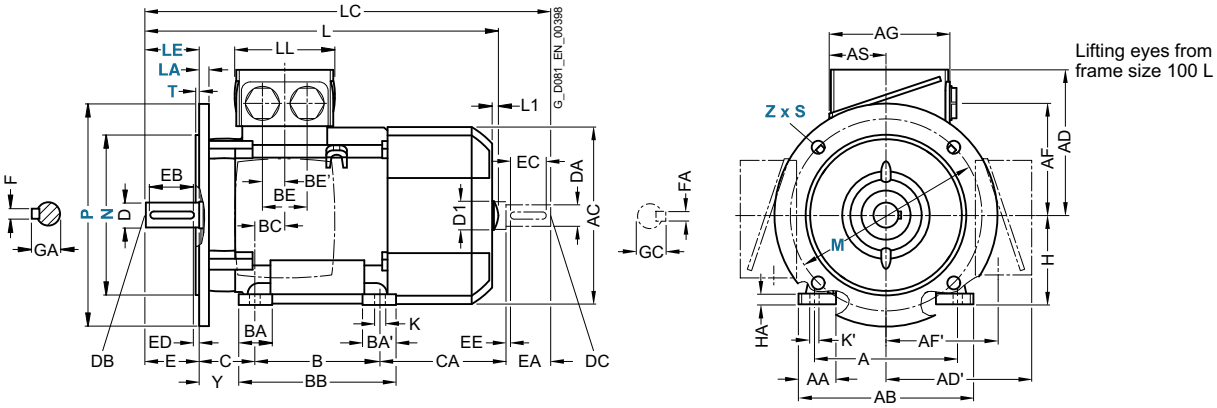

Type of construction IM B14

For flange dimensions, see page 1/53 (**Z** = the number of retaining holes)

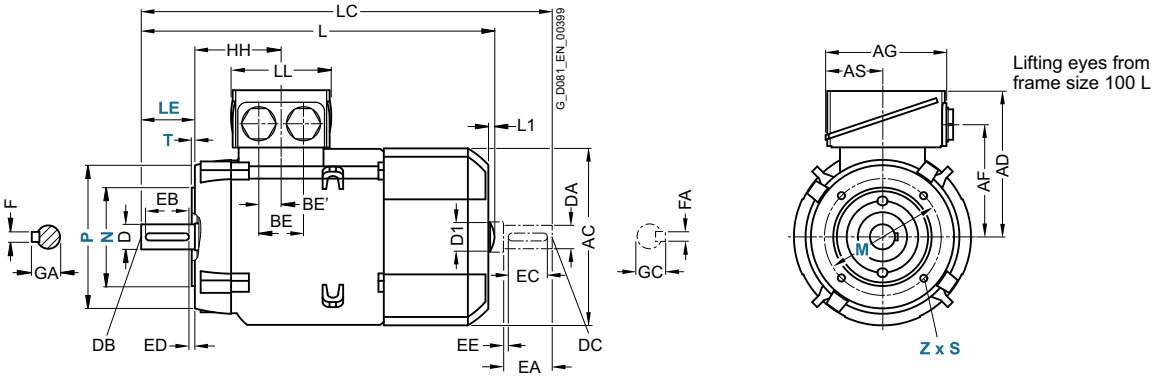

For motor			Dimension designation acc. to **IEC**								DE shaft extension							NDE shaft extension						
Frame size	Motor type 1LE1092	No. of poles	HH	K	K'	L[1)]	L1	D1	LC	LL	D	DB	E	EB	ED	F	GA	DA	DC	EA	EC	EE	FA	GC
100 L	All	2, 4	96.5	12	16	395.5	7	32	454	112	28	M10	60	50	5	8	31	24	M8	50	40	5	8	27
112 M	All	2, 4	96	12	16	389	7	32	450	112	28	M10	60	50	5	8	31	24	M8	50	40	5	8	27
132 S	All	2, 4	115.5	12	16	465	8.5	39	535.5	130	38	M12	80	70	5	10	41	28	M10	60	50	5	8	31
132 M	All	2, 4	115.5	12	16	465	8.5	39	535.5	130	38	M12	80	70	5	10	41	28	M10	60	50	5	8	31
160 M	All	2, 4	155	15	19	604	10	45	730	145	42	M16	110	90	10	12	45	42	M16	110	90	10	12	45
160 L	All	2, 4	155	15	19	604	10	45	730	145	42	M16	110	90	10	12	45	42	M16	110	90	10	12	45

[1)] The length is specified as far as the tip of the fan cover.

© Siemens AG 2018

Dimensional drawings

Type of construction IM B3

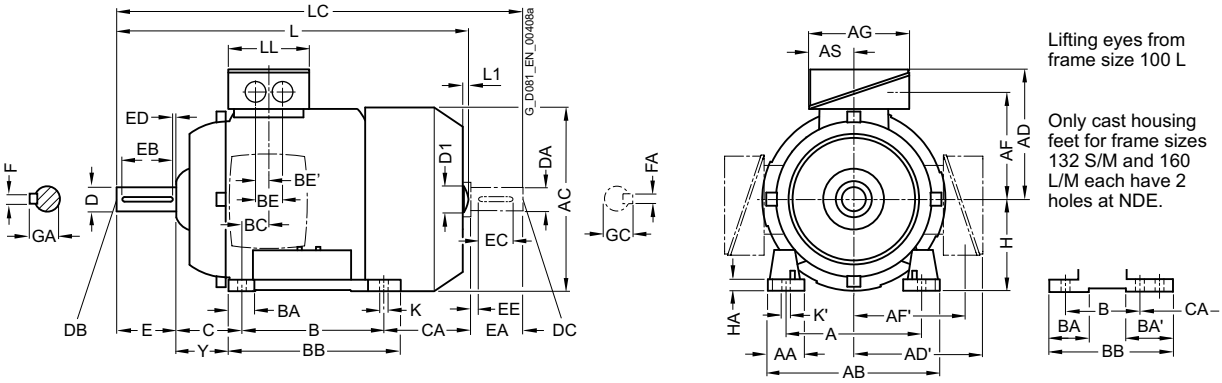

Types of construction IM B5 and IM V1

For flange dimensions, see page 1/53 (**Z** = the number of retaining holes)

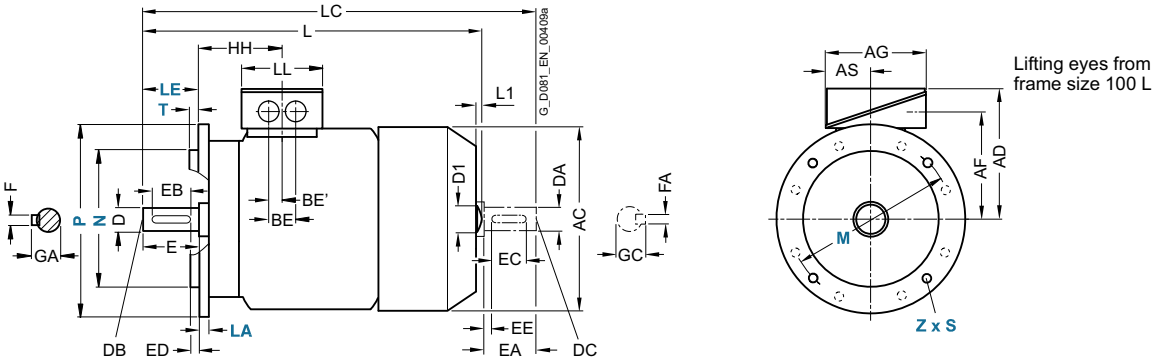

For motor			Dimension designation acc. to **IEC**																				
Frame size	Motor type 1LE1592	No. of poles	A	AA	AB	AC	AD	AD'	AF	AF'	AG	AS	B	BA	BA'	BB	BC	BE	BE'	C	CA	H	HA	Y
100 L	All	2, 4	160	42	196	217	193	193	147	147	163	80.5	140	48	48	176	37.5	48	24	63	141	100	12	45
112 M	All	2, 4	190	46	226	239	195	195	150	150	163	80.5	140	48	48	176	30	48	24	70	130	112	12	52
132 S	All	2, 4	216	53	256	281	214.5	214.5	169	169	163	80.5	140	52[1]	891)	218[2]	26.5	48	24	89	166.5	132	15	69
132 M	All	2, 4	216	53	256	281	214.5	214.5	169	169	163	80.5	178	52[1]	89[3]	218	26.5	48	24	89	128.5	132	15	69
160 M	All	2, 4	254	60	300	333.5	265	265	213	213	190	92	210	73[4]	117[4]	300[5]	37	60	30	108	192	160	18	85
160 L	All	2, 4	254	60	300	333.5	265	265	213	213	190	92	254	73[4]	117[6]	300	37	60	30	108	148	160	18	85

[1] With screwed-on feet, this dimension is 41 mm.
[2] With screwed-on feet, this dimension is 180 mm.
[3] With screwed-on feet, this dimension is 79 mm.
[4] With screwed-on feet, this dimension is 51 mm.
[5] With screwed-on feet, this dimension is 256 mm.
[6] With screwed-on feet, this dimension is 95 mm.

© Siemens AG 2018

Dimensional drawings (continued)

Type of construction IM B35

For flange dimensions, see page 1/53 (**Z** = the number of retaining holes)

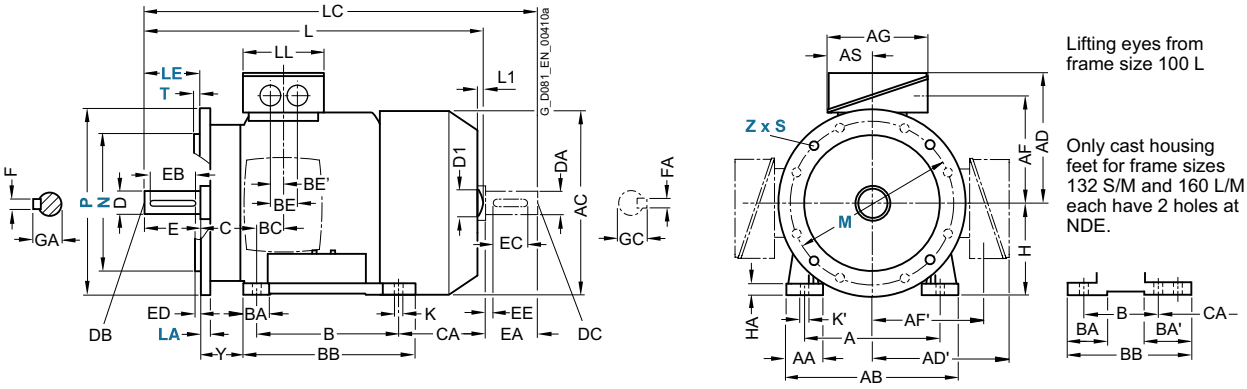

Type of construction IM B14

For flange dimensions, see page 1/53 (**Z** = the number of retaining holes)

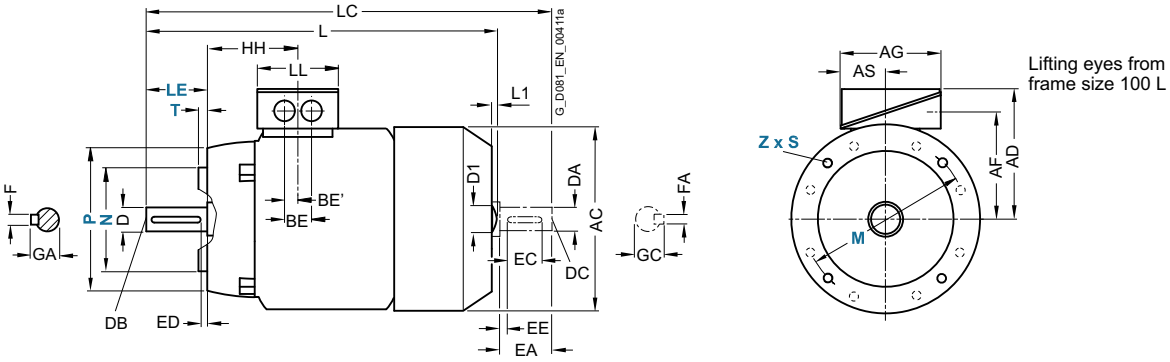

For motor			Dimension designation acc. to **IEC**								DE shaft extension							NDE shaft extension						
Frame size	Motor type 1LE1592	No. of poles	HH	K	K'	L	L1	D1	LC	LL	D	DB	E	EB	ED	F	GA	DA	DC	EA	EC	EE	FA	G C
100 L	All	2, 4	100.5	12	16	397.5	7	32	454	134	28	M10	60	50	5	8	31	24	M8	50	40	5	8	27
112 M	All	2, 4	100.5	12	16	390.5	7	32	450	134	28	M10	60	50	5	8	31	24	M8	50	40	5	8	27
132 S	All	2, 4	115.5	12	16	466.5	8.5	39	535.5	134	38	M12	80	70	5	10	41	28	M10	60	50	5	8	31
132 M	All	2, 4	115.5	12	16	466.5	8.5	39	535.5	134	38	M12	80	70	5	10	41	28	M10	60	50	5	8	31
160 M	All	2, 4	145	14.5	18	606	10	45	730	165	42	M16	110	90	10	12	45	42	M16	110	90	10	12	45
160 L	All	2, 4	145	14.5	18	606	10	45	730	165	42	M16	110	90	10	12	45	42	M16	110	90	10	12	45

© Siemens AG 2018

Dimensional drawings

Type of construction IM B3

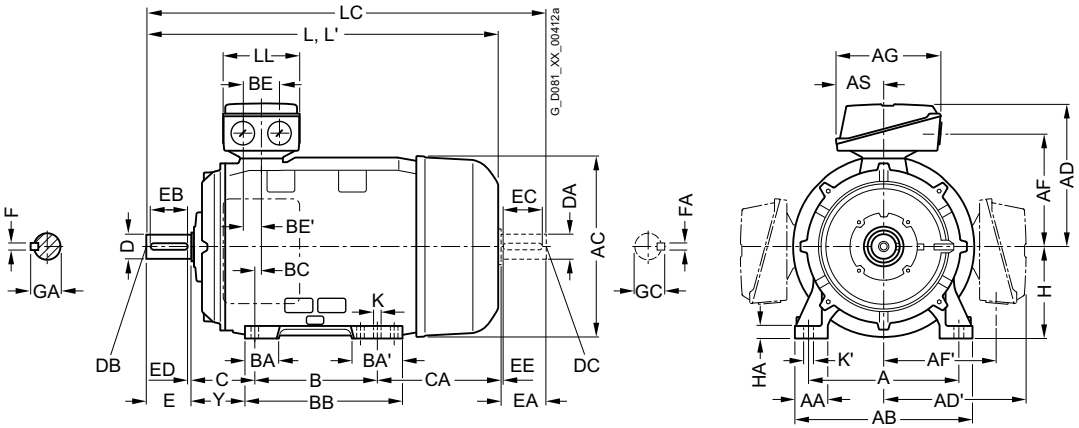

Types of construction IM B5 and IM V1

For flange dimensions, see page 1/53 (**Z** = the number of retaining holes)

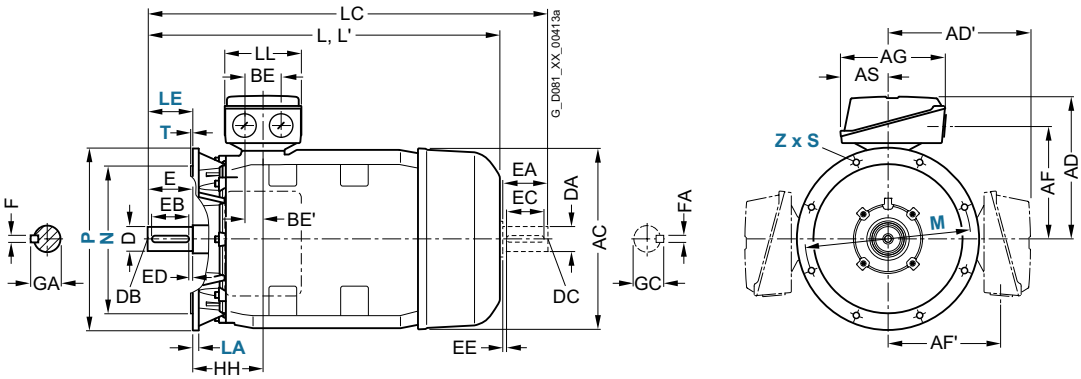

For motor			Dimension designation acc. to **IEC**																	
Frame size	Motor type 1LE1592-	No. of poles	A	AA	AB	AC	AD	AD´	AF	AF´	AG	AS	B	BA	BA´	BB	BC	BE	BE´	C	CA
180 M 180 L	1EA2 1EB2 1EB4	2 4 4	279	65	339	356	286	286	234	234	190	92	241 279	85	120	328	34	60	30	121	202
200 L	2AA4 2AA5 2AB5	2 2 4	318	70	378	396	315	315	259	259	266	112	305	104	104	355	31	85	42.5	133	177
225 S 225 M	2BB0 2BA2 2BB2	4 2 4	356	80	436	449	338	338	282	282	266	112	311	92	117	361	15	85	42.5	149	253
250 M	2CA2 2CB2	2 4	406	100	490	497	410	410	322	322	319	145	349	102	102	409	24	110	55	168	230

© Siemens AG 2018

Dimensional drawings (continued)

Type of construction IM B35

For flange dimensions, see page 1/53 (**Z** = the number of retaining holes)

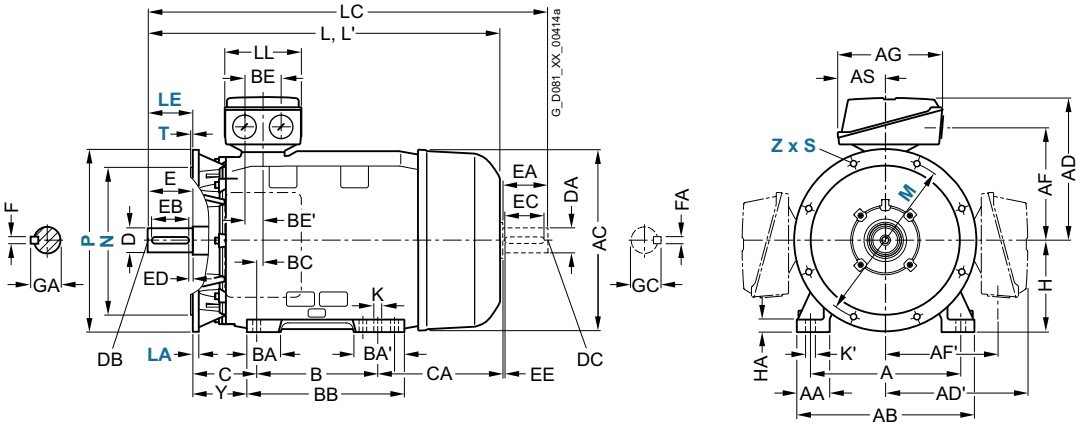

For motor			Dimension designation acc. to **IEC**										DE shaft extension							NDE shaft extension						
Frame size	Motor type 1LE1592-	No. of poles	H	HA	Y	HH	K	K´	L	L´	LC	LL	D	DB	E	EB	ED	F	GA	DA	DC	EA	EC	EE	FA	GC
180 M	1EA2	2	180	20	95	155	15	19	668	668	784	165	48	M16	110	100	5	14	52	48	M16	110	100	5	14	51.5
	1EB2	4							698	698	814															
180 L	1EB4	4																								
200 L	2AA4	2	200	25	108	164	19	25	721	755	835	197	55	M20	110	100	5	16	59	55	M20	110	100	5	16	59
	2AA5	2																								
	2AB5	4																								
225 S	2BB0	4	225	34	124	164	19	25	788	–	903	197	60	M20	140	125	10	18	64	55	M20	110	100	5	16	59
225 M	2BA2	2							818	852	933		55		110	100	5	16	59	48	M16				14	51.5
	2BB2	4							848	–	963		60		140	125	10	18	64	55	M20				16	59
250 M	2CA2	2	250	40	138	192	24	30	887	924	1002	233	60	M20	140	125	10	18	64	55	M20	110	100	5	16	59
	2CB2	4								–	1032		65						69	60		140	125	10	18	64

© Siemens AG 2018

Dimensional drawings

Type of construction IM B3

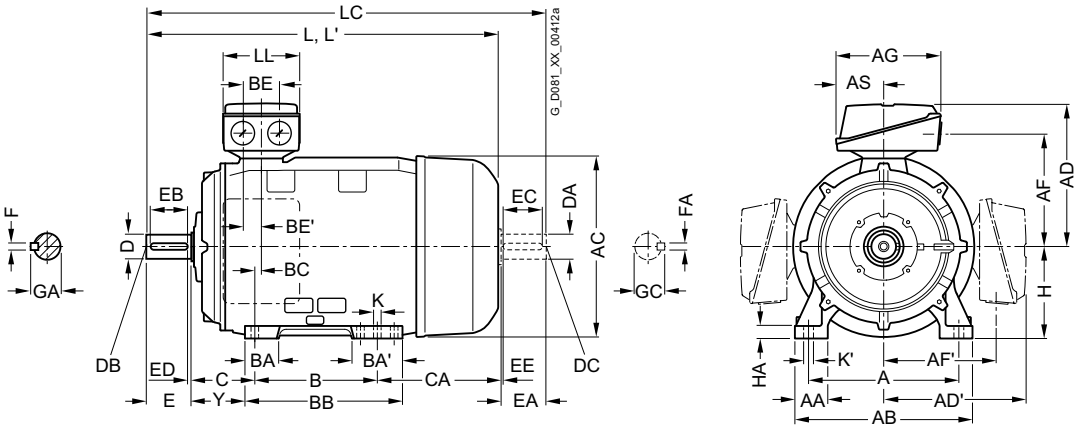

Types of construction IM B5 and IM V1

For flange dimensions, see page 1/53 (**Z** = the number of retaining holes)

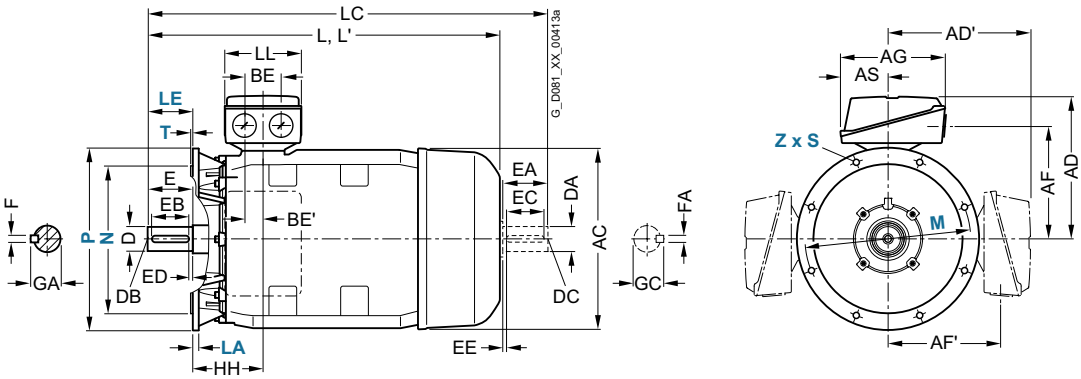

For motor			Dimension designation acc. to **IEC**																	
Frame size	Motor type 1LE1592-	No. of poles	A	AA	AB	AC	AD	AD´	AF	AF´	AG	AS	B	BA	BA´	BB	BC	BE	BE´	C	CA
280 S	2DA0 2DB0	2 4	457	100	540	551	433	433	345	345	319	145	368	101	152	479	20	110	55	190	267
280 M	2DA2 2DB2	2 4	457	100	540	551	433	433	345	345	319	145	419	101	152	479	20	110	55	190	216
315 S	3AB0	4	508	120	610	616	515	515	404	404	374	164	406	113	170	527	22	110	55	216	295
315 M	3AB2[1)]	4	508	120	610	616	515	515	404	404	374	164	457	113	170	578	22	110	55	216	409
315 L[1)]	3AB4 3AB5	4 4	508	120	610	616	515	515	404	404	374	164	508	113 176	170 227	578 648	22	110	55	216	358 513

[1)] For orders with screwed-on feet (order code **H01**), these screwed-on feet have 3 drilled holes on the NDE side with the dimension B 406 mm, 457 mm, and 508 mm respectively; the dimension BB is 666 mm.

© Siemens AG 2018

Dimensional drawings (continued)

Type of construction IM B35

For flange dimensions, see page 1/53 (**Z** = the number of retaining holes)

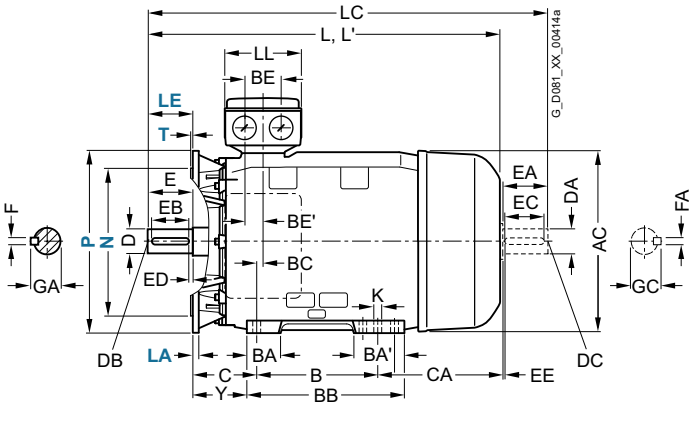

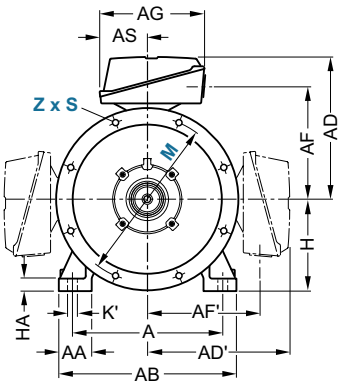

For motor			Dimension designation acc. to **IEC**										DE shaft extension							NDE shaft extension						
Frame size	Motor type 1LE1592-	No. of poles	H	HA	Y	HH	K	K´	L	L´	LC	LL	D	DB	E	EB	ED	F	GA	DA	DC	EA	EC	EE	FA	GC
280 S	2DA0 2DB0	2 4	280	40	160	210	24	30	960	998 –	1105	233	65 75	M20	140	125	10	18 20	69 79.5	60 65	M20	140	125	10	18	64 69
280 M	2DA2 2DB2	2 4	280	40	160	210	24	30	960	998 –	1105	233	65 75	M20	140	125	10	18 20	69 79.5	60 65	M20	140	125	10	18	64 69
315 S	3AB0	4	315	50	181	238	28	35	1082	–	1227	299	80	M20	170	140	25	22	85	70	M20	140	125	10	20	74.5
315 M	3AB2	4	315	50	181	238	28	35	1247	–	1392	299	80	M20	170	140	25	22	85	70	M20	140	125	10	20	74.5
315 L[1)]	3AB4	4	315	50	146	238	28	35	1247 1402	–	1547	299	80	M20	170	140	25	22	85	70	M20	140	125	10	20	74.5
	3AB5	4																								

© Siemens AG 2018

Notes

© Siemens AG 2018

5/2 Orientation
5/2 • Overview
5/2 Classification of zones
5/3 Types of protection
5/3 Certification
5/4 Overview of SIMOTICS XP 1MA/1MB1/1MD5/1LA/1LG/1PQ8/1PS5 explosion-proof motors
5/5 • Benefits
5/5 • Application
5/6 • Technical specifications
5/6 General information
5/6 Zone 1 with type of protection Ex eb II increased safety "e"
5/6 Zone 1 with type of protection Ex de IIC explosion-proof enclosure "d"
5/6 Type of protection Ex ec for use in Zone 2
5/6 Type of protection Ex tb IIIC and Ex tc IIIB for use in Zones 21 and 22
5/6 Type of protection Ex ec/Ex tc for use in Zone 2/22
5/7 Converter operation
5/7 Order handling for 1MB1 motors for converter operation
5/7 - PTC thermistor
5/7 - Selection of the frequency converters
5/7 - Insulated bearings
5/7 - Rating plate
5/8 - Converter operation specially for motors in type of protection "Ex ec" (Zone 2) and VIK-Ex ec version
5/8 - Converter operation specially for motors in type of protection "Ex tb" (Zone 21) and "Ex tc" (Zone 22)
5/8 - Converter operation specially for motors in type of protection "Ex ec/Ex tc" (Zone 2/22)
5/9 - Mechanical limit speeds of the explosion-proof motors SIMOTICS XP 1MB15, 1MB16 Ex ec, Ex tb, and Ex tc
5/9 - Special technology
5/10 - Explosion-proof rotary pulse encoder
5/11 - Explosion-proof separately driven fan
5/14 - VIK version
5/14 - Ex certification EAC for the Eurasian customs union
5/14 - Coolant temperature
5/15 Article number code
5/15 • Selection and ordering data

5/16 Motors with type of protection Ex tb, Ex tc, Ex ec for use in Zones 21, 22, 2
Motors with IE3 Premium Efficiency
5/16 Aluminum series 1MB10, self-ventilated
5/17 Cast-iron series 1MB15, 1MB16, self-ventilated
Motors with IE2 High Efficiency
5/20 Aluminum series 1MB10, self-ventilated
5/22 Cast-iron series 1MB15, 1MB16, self-ventilated
Motors with IE1 Standard Efficiency
5/26 Aluminum series 1MB10, self-ventilated

5/28 Article No. supplements and special versions
5/28 Voltages
5/30 Types of construction
5/34 Motor protection
5/36 Terminal box position
5/38 Options
5/47 Accessories

5/48 Dimensions
5/48 Overall dimensions
5/49 Notes on the dimensions
5/49 Dimension sheet generator
Aluminum series
5/50 Self-ventilated – IE3
5/52 Self-ventilated – IE2 and IE1
Cast-iron series
5/54 Self-ventilated – IE3
5/58 Self-ventilated – IE2

© Siemens AG 2018

Overview

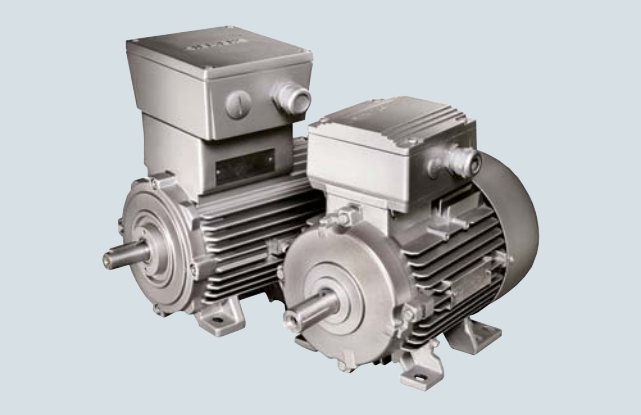

In many industrial and public sectors, explosion protection or explosion hazards are ever-present, e.g. in the chemicals industry, in refineries, on drilling platforms, at gas stations, in feed manufacturing and in sewage treatment plants.

The risk of explosion is always present when gases, fumes, mist or dust are mixed with oxygen in the air in an explosive ratio close to sources of ignition that are able to release the so-called minimum ignition energy.

In the chemical and petrochemical industries in particular, when crude oil and natural gas are transported, or in mining, milling (e.g. grain and granular solids), this can result in serious injury to persons and damage to equipment.

To ensure maximum safety in these areas, legislators in most countries have implemented appropriate stipulations in the form of laws and regulations based on national and international standards.

Explosion-protected equipment is designed such that an explosion can be prevented when it is used properly.

The explosion-protected equipment can be designed in accordance with various types of protection.

The local conditions must be subdivided into specified zones by the user with the assistance of the responsible authorities in accordance with the frequency of occurrence of an explosion hazard. Device (equipment) categories are assigned to these zones. The zones are then subdivided into possible types of protection and therefore into possible equipment (product) types.

Classification of zones

Areas subject to explosion hazard are divided into zones. Division into zones depends on the chronological and geographical probability of the presence of a hazardous, potentially explosive atmosphere. Information and specifications for classification of the zones are laid down in the following standards:

- IEC/EN 60079-10-1 for gas atmospheres
- IEC/EN 60079-10-2 for dust atmospheres

Further, a distinction is made between various explosion groups as well as temperature classes and these are included in the hazard assessment.

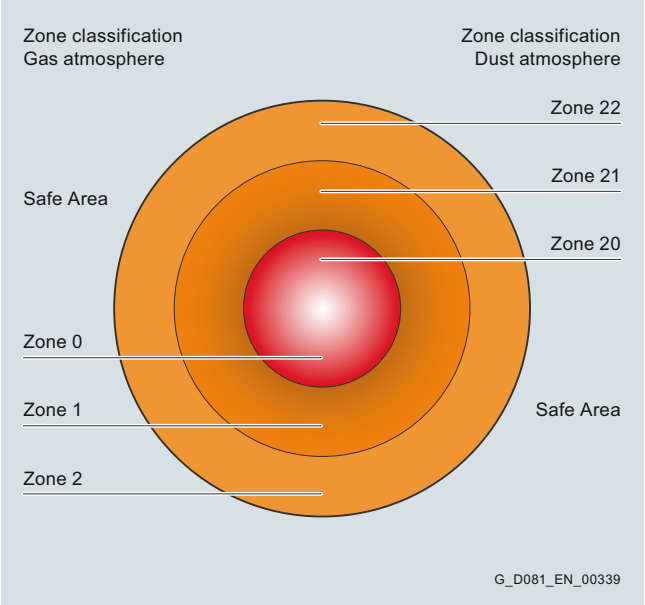

Depending on the particular zone and therefore the associated hazard, operating equipment must comply with defined minimum requirements regarding the type of protection. The different types of protection require corresponding measures to prevent ignition that should be implemented at the motor in order to prevent a surrounding explosive atmosphere from being ignited.

Note:
According to the IEC/EN 60079-7:2015 standard, the previous designations of the types of protection Ex e and Ex nA have been changed to **Ex eb** and **Ex ec**. Expiration date of the previous designations is the 07/31/2018.

Zone		Zone definition acc. to			
Gas [1) 2)]	Dust [1) 2)]	IEC/EN 60079-10-1 for gas atmospheres IEC/EN 60079-10-2 for dust atmospheres	Assigned types of protection	Category according to 2014/34/EU	Equipment protection level acc. to IEC/EN 60079-0
0	–	An area in which there is an explosive gas atmosphere **constantly**, **over a long period** or **frequently**.	Low voltage motors not permitted	1	Ga
1	–	An area in which it is expected that an explosive gas atmosphere will occur **occasionally** during normal operation.	Ex eb, Ex de, Ex d	2	Gb
2	–	An area in which it is expected that an explosive gas atmosphere will occur only **rarely** and then only **briefly** during normal operation.	Ex ec	3	Gc
–	20	An area in which there is an explosive gas atmosphere comprising a dust-air mixture **constantly**, **over a long period** or **frequently**.	Low voltage motors not permitted	1	Da
–	21	An area in which it is expected that an explosive gas atmosphere comprising a dust-air mixture will occur **occasionally** during normal operation.	Ex tb	2	Db
–	22	An area in which it is expected that an explosive gas atmosphere in the form of a cloud of flammable dust in air will occur only **rarely** and then only **briefly** during normal operation.	Ex tc [3)]	3	Dc

1) Motors of
- Zone 1 can also be used in Zone 2
- Zone 21 can also be used in Zone 22

2) Motors which are certified for gas or dust protection must not be used in hybrid mixtures! Hybrid mixtures: When explosive gas and dust atmospheres occur simultaneously.

3) Ex tc motors are not approved for operation in environments containing conductive dust.

© Siemens AG 2018

Overview (continued)

Types of protection

Type of protection "Increased safety" **Ex eb** acc. to IEC/EN 60079-7

Additional measures are taken to prevent the possibility of high temperatures and to prevent sparks or arcs from occurring on the inside and on external components of the motor.

Motors of the 1MA6 and 1MA7 series are designed with "Increased safety" – see Catalog D 81.1 · July 2011.

Type of protection "Explosion-proof enclosure" **Ex d** acc. to IEC/EN 60079-1

The components that can ignite an explosive atmosphere are located in a housing that is not damaged by an internal explosion and flameproof joints prevent flames from escaping to the explosive atmosphere on the outside.

The motors in series 1MD5 and 1PS5 are designed with "Explosion-proof housing" **Ex d** – see Catalog D 83.1.

Type of protection "Non-sparking" **Ex ec** acc. to IEC/EN 60079-15

The type of protection **Ex ec** ensures that a motor in normal operation as well as when operated under deviating conditions as specified in the standard is not able to ignite a surrounding explosive gas atmosphere.

1MB103, 1MB153 and 1MB163 motors are available in the **Ex ec** version. For motors of the 1LA7/9, 1LA6 and 1LG series, see Catalog D 81.1 · July 2011.

Certification

IEC motors for use in hazardous zones are certified according to the EU Directive 2014/34/EU (ATEX) and are marked according to the following schematic:

Example "Non-sparking":	**CE**	**0158**	**⟨Ex⟩**	**II**	**3**	**G**	**Ex**	**ec**	**IIC**	**T3**	**Gc**
CE marking											
Number of the certifying "notified" body (0158 = EXAM)											
Explosion protection marking											
Device group: I = Underground II = All other areas											
Category: 2 (Zone 1/21) 3 (Zone 2/22)											
Ex atmosphere G = Gas D = Dust											
Explosion protected equipment											
Type of protection nA, d, de, e, tb or tc (de = Ex d motor housing with Ex eb terminal box)											
Explosion group and explosion subgroup: II = Gas (IIA, IIB or IIC); III = Dust (IIIA, IIIB or IIIC)											
Temperature class with max. surface temperature: T1 = 450 °C, T2 = 300 °C, T3 = 200 °C, T4 = 135 °C, T5 = 100 °C, T6 = 85 °C											
Equipment protection level (G = Gas; D = Dust): Ga = Very high protection, Gb = High protection, Gc = Increased protection, Da = Very high protection, Db = High protection, Dc = Increased protection											

Additional information on the subject of explosion protection, types of protection and zones is provided in the Siemens brochure "*Explosion Protection*".

Type of protection "Dust explosion protection" **Ex tb, Ex tc** acc. to IEC/EN 60079-31

This type of protection applies for electrical equipment protected using a housing and with limited surface temperature for use in areas in which combustible dust can occur in concentration levels that could cause a fire or an explosion.

The following motor series are available with type of protection Ex tb or Ex tc:

- 1MB101, 1MB151 and 1MB161 in version **Ex tb**
- 1MB102, 1MB152 and 1MB162 in version **Ex tc**

For motors of the 1LA7/9, 1LA6 and 1LG series, see Catalog D 81.1 · July 2011.

Explosion-proof motors for converter operation

Basically, explosion-proof motors (except for Ex eb) can be fed from converters. Particular attention must be paid to the interaction between the motor and converter system, especially with regard to the following aspects:

- The harmonic content of the supply voltage raises the motor temperature, so the motor power must be reduced
- Less cooling of the motor at speeds below the rated speed
- Voltage stress on the motor winding
- Bearing currents

© Siemens AG 2018

Overview (continued)

Overview of SIMOTICS XP 1MA/1MB1/1LA/1LG/1PQ8 explosion-proof motors

The table below contains a complete overview of our products, their types of protection and the assignment of motor types to categories. It is important to note that depending on whether the motor is used for converter operation or line operation, different order codes are required for unique selection of the required product.

Sector	Category	Zone	Frequency of occurrence of the Ex atmosphere	Type of protection	Temperature class	Equipment protection level	Degree of protection	Motor type and if applicable order code	Operation	Order code	Utilization according to temperature class	Standard
Gases and vapors (G)	1G	0	constantly or long-term	Not admissible with low-voltage motors								
	2G	1	occasionally	Ex de IIC [1] (explosion-proof enclosure)	T1 – T4	Gb	IP55	1MD5, 1PS5	Line	–	130 (B)	IEC/EN 60079-0 IEC/EN 60079-1 IEC/EN 60079-7
									Converter	**A15 A16**	155 (F)	
				Ex eb IIC [1] (increased safety)	T1 – T3	Gb	IP55	1MA6, 1MA7	Line	–	130 (B)/ 155 (F) [3]	IEC/EN 60079-0 IEC/EN 60079-7
	3G	2	rarely or briefly	Ex ec IIC [1] (non-sparking)	T1 – T3	Gc	IP55	1LA6, 1LA7, 1LA8, 1PQ8 [2], 1LA9, 1LG4/6	Line	**M72**	130 (B)	IEC/EN 60079-0 IEC/EN 60079-15
									Converter	**M73**		
								1MB103, 1MB153, 1MB163	Line			
									Converter	**B40 B41**		
Dust (D)	1D	20	constantly or long-term	Not admissible with low-voltage motors								
	2D	21	occasionally	Ex tb IIIC [1]: conductive and non-conductive dust	Max. housing temperature T 125 °C [6]	Db	IP65	1LA5, 1LA6, 1LA7, 1LA8 [4], 1PQ8 [2], 1LA9, 1LG4/6	Line	**M34**	130 (B)	IEC/EN 60079-0 IEC/EN 60079-31
									Converter	**M38**		
	3D	22	rarely or briefly	Ex tc IIIB [1]: non-conductive dust		Dc	IP55		Line	**M35**		
									Converter	**M39**		
								1MB101/2, 1MB151/2, 1MB161/2	Line			
									Converter	**B40 B41**		
Gases and vapors (G) and dusts (D) [5]	2G 2D	1 or 21	occasionally	Ex de IIC [1] (explosion-proof enclosure)/ Ex tb IIIC [1]: conductive and non-conductive dust	T1 – T4/ Max. housing temperature T 135 °C	Gb Db	IP65	1MD5, 1PS5	Line	**W21**	130 (B)	IEC/EN 60079-0 IEC/EN 60079-1 IEC/EN 60079-31
									Converter	**W23**	155 (F)	
	3G 3D	2 or 22	rarely or briefly	Ex nA IIC [1] (Non-Sparking)/ Ex tc IIIB: non-conductive dust	T1 – T3/ Max. enclosure temperature T 125 °C [6]	Gc Dc	IP55	1LA6, 1LA7, 1LA9, 1LG4/6	Line	**M74**	130 (B)	IEC/EN 60079-0 IEC/EN 60079-15 IEC/EN 60079-31
									Converter	**M75**		
								1MB103 +B30 1MB153 +B30 1MB163 +B30	Line			
									Converter	**B40 B41**		

[1] Highest explosion group IIC includes IIB and IIA. IIIA stands for lint, IIIB for non-conductive dust and IIIC for conductive dust. 1MD5/1PS5 optionally with Ex d terminal box.

[2] 1PQ8 not possible for Zone 21. Zones 2 and 22 for 1PQ8 available on request. Utilization according to temperature class 155 (F).

[3] See EU type-examination certificate.

[4] 1LA8 only available for Zone 22 (order codes **M35**, **M39**). Converter: Utilization as standard according to temperature class 155 (F)

[5] The Ex motor is not admissible in an explosive atmosphere of dust and air (hybrid). A standard is not currently available that describes the product requirements for a hybrid mixture.

[6] For 1MB1 IE1: T140 °C
IE2: T120 °C (except T130 °C for 1MB1.11-1AD5, 1MB1.11-3AD6, 1MB1.21-1AD5 and 1MB1.21-3AD6)
IE3: T120 °C

© Siemens AG 2018

Benefits

The explosion-proof motors from Siemens offer the user numerous advantages:

- The motors are designed in accordance with Directive 2014/34/EU. As product supplier, Siemens accepts responsibility for compliance with the applicable product standards for the selected equipment.
- By using this product, the plant operating company satisfies Directive 1999/92/EC in accordance with Appendix II B (ATEX 137 previously ATEX 118a). The plant manufacturer or plant operating company is responsible for correct selection and proper usage of the equipment.
- Comprehensive series of Ex motors for protection against gas and dust.
- Individual versions of motors are possible thanks to the numerous catalog options.
- Further special versions are possible on request.
- Factory certificates 2.1 are available for a defined spectrum of Siemens motors/converters.
- The Operating Instructions (Compact) are available in all 23 official EU languages as well as Russian and Chinese.

For applications in harsh environments: SIMOTICS XP motors with a cast-iron housing

The right motor for various challenges

The following motor series are available with cast-iron housings for applications in harsh, hazardous environments:

- Basic Line: rugged, reliable motors for machine construction
- Performance Line: Motors for the process industry with reinforced bearings and a more rugged coating – for requirements that extend beyond the Basic Line

Comparison: Basic Line versus Performance Line

	Basic Line – 1MB15	**Performance Line – 1MB16**
Bearing size	62 (63 from frame size 280 upwards)	63
Relubrication	Optional (standard from frame size 280 upwards)	Standard from frame size 160 upwards (optional for frame size 100 to 132)
Paint system	Standard coating, corrosion class C2	Special coating, corrosion class C3
Motor protection	Optional	PTC
Warranty	12 months	36 months

Application

The explosion-proof motors are used in the following sectors to prevent explosion hazards that result in serious injury to persons and severe damage to equipment.

- Chemical and petrochemical industry
- Production of mineral oil and gas
- Gas works
- Gas supply companies
- Petrol stations
- Coking plants
- Mills (e.g. grain, solids)
- Sewage treatment plants
- Wood processing (e.g. sawdust, tree resin)
- Other industries subject to explosion hazards

© Siemens AG 2018

Technical specifications

General information

Ex motors are suitable for operation in electrical power systems with a voltage tolerance of ± 10 %.

Ex motors in vertical type of construction with shaft extension pointing down must have a protective cover.

Operating Instructions (Compact) are supplied as standard with explosion-proof motors in English and German. Translations are also available in all the other official EU languages as well as in Russian and Chinese.

For all explosion-proof motors, designs according to UL and CSA are not possible.

Motor connection

Certified metric cable glands/sealing plugs are included in the scope of supply of 1MB1 motors.

The certificates for the motors for hazardous areas are stored with the documentation in the "DT Configurator".

Certified motor protection switches/tripping units must always be used for motor protection, see Catalog IC 10.

Zone 1 with type of protection Ex eb II increased safety "e"

See Catalog D 81.1 · July 2011.

Zone 1 with type of protection Ex de IIC explosion-proof enclosure "d"

See Catalog D 83.1.

Type of protection Ex ec for use in Zone 2

- Standard version for paint film thicknesses < 200 µm Ex ec IIC T3 Gc. For further information about paint and paint film thicknesses, see Chapter 1, from Page 1/21 onwards.
- Optional version for paint film thicknesses > 200 µm to < 2 mm Ex ec IIB T3 Gc (order code **B31**). For further information about paint and paint film thicknesses, see Chapter 1, from Page 1/21 onwards.

1MB1, 1LA or 1LG motors are modified for this purpose in the "non-sparking" version and are suitable for use in hazardous areas of Zone 2 for temperature classes T1 to T3. The maximum surface temperature that can occur during operation must lie below the limit temperature of the respective temperature class. The ventilation system must be in accordance with IEC/EN 60079-0. The motors are equipped with an external grounding terminal. The terminal box is similar to the Ex eb design.

Please inquire in the case of:

- Utilization according to temperature class 155 (F)
- For pole-changing versions

For motors in the "non-sparking" version, a type-examination certificate is available from a recognized testing authority.

Ambient temperature

- Standard: –20 to +40 °C
- Optional: –40 to +40 °C (order code **D03**)
- Optional: –20 to +60 °C (order codes **N05**, **N06**, **N07**, **N08**)

From 40 °C, the power is reduced.
Other temperatures are available on request.

The rating plate or the additional rating plate contains the text:

Ⓔx II 3G Ex ec IIC T3 Gc
and number of the "type test certificate"

Type of protection Ex tb IIIC and Ex tc IIIB for use in Zones 21 and 22

The distinction between Zones 21 and 22 is as follows:

- Ex tb IIIC acc. to IEC/EN 60079-31 [1] for Zone 21
  - Version for Zone 21 [2], as well as Zone 22 for conductive dust (IP65) and line operation (1MB101, 1MB151, 1MB161)
- Ex tc IIIB acc. to IEC/EN 60079-31 [1] for Zone 22
  - Version for Zone 22 for non-conductive dust (IP55) and line operation (1MB102, 1MB152, 1MB162)

The 1MB1 motors are modified for this purpose for use in zones subject to dust explosion hazards. The surface temperature is ≤ 120 °C for rated operation [3].

An external grounding terminal and a metal external fan are fitted to the motors.

Pole-changing versions are not possible for Zone 21 – they are possible for Zone 22 on request.

Certification:

- Zone 21: EU type-examination certificate (ATEX) and EU Declaration of Conformity
- Zone 22: EU type-examination certificate and EU Declaration of Conformity

Identification on the rating plate:

- Zone 21: Ⓔx II 2D Ex tb IIIC T120 °C Db [3]
- Zone 22: Ⓔx II 3D Ex tc IIIB T120 °C Dc [3]

Ambient temperature

- Standard: –20 to +40 °C
- Optional: –40 to +40 °C (order code **D03**)
- Optional: –20 to +60 °C (order codes **N05**, **N06**, **N07**, **N08**)

From 40 °C, the power is reduced.
Other temperatures are available on request.

Type of protection Ex ec/Ex tc for use in Zone 2/22 [4]

The motors must be ordered with:

- Version for Zones 2 or 22 for non-conductive dust for line operation – order code **B30** [4]

The Ex motor is not admissible in an explosive atmosphere of dust and air (hybrid). A standard is not currently available that describes the product requirements for a hybrid mixture.

Zone 2/22: Ⓔx II 3G Ex ec IIC T3 Gc
Ⓔx II 3D Ex tc IIIB T120 °C Dc [3]

[1] Zone 21 only up to frame size 315 L.

[2] Zone 21 includes conductive and non-conductive dust.

[3] IE1: T140 °C
IE2: T120 °C (except T130 °C for 1MB1.11-1AD5, 1MB1.11-3AD6, 1MB1.21-1AD5 and 1MB1.21-3AD6)
IE3: T120 °C

[4] The Ex motor is not admissible in an explosive atmosphere of dust and air (hybrid). A standard is not currently available that describes the product requirements for a hybrid mixture.

© Siemens AG 2018

Technical specifications (continued)

Converter operation

General information

All the data listed in Catalog D 81.1 is applicable for a 50 Hz line supply. During converter operation, the reduced torques for constant torque and drives for fans, pumps and compressors must be observed due to the harmonic content of the supply. This data is available in the "Drive Technology Configurator" (DT Configurator). Higher noise levels must be expected than for 50 Hz line operation for motors operating with converters due to the harmonic content of the supply.

Maximum voltage load on the motor winding in converter operation:

Frame sizes: 71 to 315:

- $\hat{U}_{\text{phase-to-phase}}$: ≤ 1500 V (3000 V peak-peak values ($V_{pk/pk}$))
- $\hat{U}_{\text{phase-to-ground}}$: ≤ 1100 V (2200 V peak-peak values ($V_{pk/pk}$))

The following generally applies to Siemens converters (SINAMICS):

- U_{line}: = 500 V ± 10 % (BLM = Basic Line Module; DFE = Direct Front End)
- U_{line}: ≤ 460 V ± 10 % (ALM = Active Line Module; AFE = Active Front End); U_{dc} <720 V
- U_{line}: = 690 V ± 10 % (only permissible with SINAMICS G180 that has a reinforced dv/dt filter (standard option G180: **L10**).

Further configuration notes are documented in the factory certificate 2.1 and in the EU type-examination certificates.

Order handling for 1MB1 motors for converter operation

PTC thermistor

For converter operation, Ex motors must always be monitored using PTC thermistors. The motors must therefore be ordered with the 15th position of the Article No.

- **B** – PTC thermistor for tripping – or alternatively:
- **C** – PTC thermistor for alarm and tripping.

General information regarding the PTC thermistors:

- **B** in 15th position of the Article No.:
  The motors are equipped with 3 PTC thermistors for tripping in the motor winding.
- **B** in 15th position of the Article No.:
  The motors are equipped with 3 PTC thermistors for alarm and 3 PTC thermistors for tripping in the motor winding.

Certified tripping units are required for this purpose, see Catalog IC 10.

Selection of the frequency converters

The SINAMICS frequency converters are categorized into 2 product groups (order code **B40** and **B41**). Each product group is a data record with motor operating data each assigned to one frequency converter. The converter type is stamped on the rating plate. Alternative, approved SINAMICS converters can be selected, by adding the order code **Y68**.

Product group 1 (basic version):

Order code **B40** – version for converter operation in basic version with operating data SINAMICS G120 with PM240-2

Product group 1 (alternative SINAMICS converter):

Order codes **B40** + **Y68**

Operating data such as order code **B40** with alternative SINAMICS converters on the rating plate

- **Y68** with plain text (C-text) G120 with PM230
- **Y68** with plain text (C-text) G120 with PM240
- **Y68** with plain text (C-text) G120C
- **Y68** with plain text (C-text) G120P with PM230
- **Y68** with plain text (C-text) G120P with PM240-2
- **Y68** with plain text (C-text) G120P with PM240P-2
- **Y68** with plain text (C-text) G120P with PM330
- **Y68** with plain text (C-text) G130
- **Y68** with plain text (C-text) G150
- **Y68** with plain text (C-text) G180
- **Y68** with plain text (C-text) S120 (BLM/SLM)
- **Y68** with plain text (C-text) V20

Product group 2 (basic version):

Order code **B41** – version for converter operation in basic version with operating data SINAMICS S150.

Product group 2 (alternative SINAMICS converter):

Order codes **B41** + **Y68**

Operating data such as order code **B41** with alternative SINAMICS converters on the rating plate:

- **Y68** with plain text (C-text) S120 (ALM)

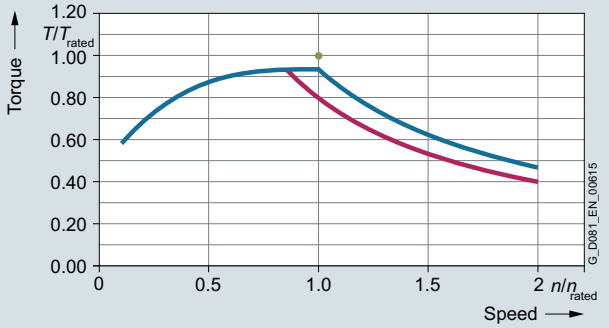

1MB1 motors, line (DOL) operation

1MB1 motors, converter operation on SINAMICS frequency converters, product group 1 (order code **B40**)

1MB1 motors, converter operation on SINAMICS frequency converters, product group 2 (order code **B41**)

Insulated bearings

Frame sizes 225 and 250: For converter operation it is recommended that an "insulated bearing cartridge NDE" – order code **L51** be used.
Frame sizes 280 and 315: When ordering with the order codes **B40**/**B41**, the "insulated bearing cartridge NDE" is included as standard.

Rating plate

The operating data for line operation is specified on the rating plate – on an additional rating plate, 4 rated operating points are possible in the following variants, according to the selected product:

Possible variants	Rated operating points in Hz				Additional identification code voltage code 12th and 13th position of the Article No. and order code
50 Hz field weakening range	5	25	50	f_{max}	50 Hz voltage: e.g. "**90**" and **M4A**
60 Hz field weakening range	6	30	60	f_{max}	60 Hz voltage: e.g. "**90**" and **M1E**
87 Hz characteristic	5	25	87	f_{max}	87 Hz at 400 VΔ: "**90**" and **M3A**

f_{max} see page 5/9.

© Siemens AG 2018

Technical specifications (continued)

These rated operating points on the additional plate apply for both constant torque drives and pump/fan/compressor drives. For a constant torque drive, the resulting thermal motor torques in the positioning range must be taken into account.

Example motor ID:

Motor rating plate with line operation data and additional plate with converter operation data:

Non-sparking motor Ex ec (Zone 2) for operation on SINAMICS G180:

1MB15331CB090AB4-Z
M4A+B40+Y68
Plain text Y68: SINAMICS G180

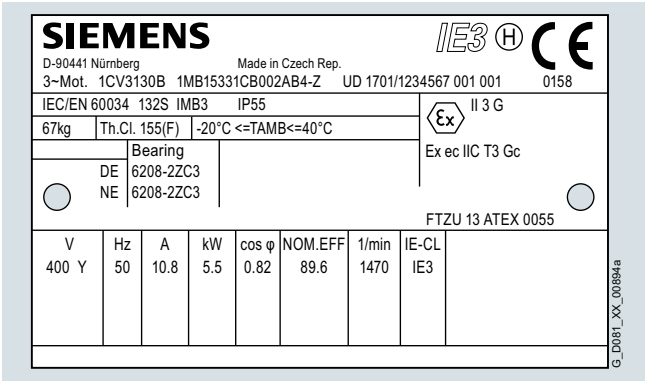

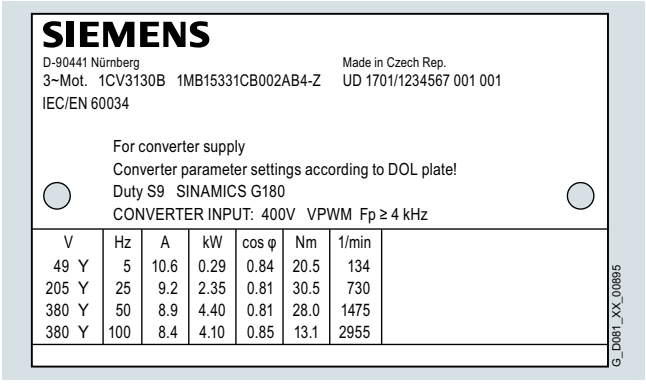

For all motors, an additional rating plate complete with the operating data for the motor on the converter is fitted.

The converter type and the associated operating data are on the rating plate.

The reasons for stamping the converter type on the additional rating plate are the different control levels for the converter output voltage, pulse frequency, output frequency, harmonic content and the associated derating for the motor.

For compliance with the permissible temperature class 130 (B), derating is necessary in the case of converter operation. The reduction in torque depends on the choice of converter type. The data can be viewed in the "Drive Technology Configurator" (DT Configurator) and used as the basis for configuration.

The factory certificate 2.1 for the specified converters is stored with the documentation for low-voltage motors in the "Drive Technology Configurator" (DT Configurator).

To ensure unambiguous order handling for the voltage, each approved voltage code/voltage order code is assigned only "one" voltage/frequency, as seen below:

Voltage code 12th and 13th position of the Article No.	Order code	Line frequency	Line voltage
27	–	50 Hz	500 VY, 50 Hz power
40	–	50 Hz	500 VΔ, 50 Hz power
90	**M4A**	50 Hz	400 VY, 50 Hz power
90	**M4B**	50 Hz	400 VΔ, 50 Hz power
90	**M2C**	60 Hz	440 VY, 50 Hz power
90	**M1C**	60 Hz	440 VY, 60 Hz power
90	**M2D**	60 Hz	440 VΔ, 50 Hz power
90	**M1D**	60 Hz	440 VΔ, 60 Hz power
90	**M2E**	60 Hz	460 VY, 50 Hz power
90	**M1E**	60 Hz	460 VY, 60 Hz power
90	**M2F**	60 Hz	460 VΔ, 50 Hz power
90	**M1F**	60 Hz	460 VΔ, 60 Hz power
90	**M2G**	60 Hz	575 VY, 50 Hz power
90	**M1G**	60 Hz	575 VY, 60 Hz power
90	**M2H**	60 Hz	575 VΔ, 50 Hz power
90	**M1H**	60 Hz	575 VΔ, 60 Hz power
90	**M2K**	60 Hz	480 VY; 50 Hz power
90	**M1K**	60 Hz	480 VY; 60 Hz power
90	**M2L**	60 Hz	480 VΔ, 50 Hz power
90	**M1L**	60 Hz	480 VΔ, 60 Hz power
90	**M1Y** (non-standard winding)	50 or 60 Hz	Plain text (max. 460 VY, 50 or 60 Hz)
90	**M3A** [3]	50 Hz	At 87 Hz, 400 VΔ: (4-pole to 8-pole)

Converter operation specially for motors in type of protection "Ex ec" (Zone 2) and VIK-Ex ec version

IEC/EN 60079-15 specifies that the motor and converter must be tested as a unit (individual test). The individual test is available for motors of "n" type of protection on the specified converters SINAMICS G, SINAMICS S and SINAMICS V20. For details, see factory certificate 2.1.

Individual testing can be performed for non-Siemens converters on request (additional charge); the customer may be required to supply the non-Siemens converter for individual tests.

The test will cost more when using non-Siemens converters (especially on commissioning). Commissioning personnel must be provided by the customer for setup and operation during the test, if required.

Converter operation specially for motors in type of protection "Ex tb" (Zone 21) and "Ex tc" (Zone 22) [1]

The drive system comprising motors protected against dust explosions operating on SINAMICS G, SINAMICS S and SINAMICS V20 converters has been tested. For details, see factory certificate 2.1. Please inquire about operation with non-Siemens converters.

Converter operation specially for motors in type of protection "Ex ec/Ex tc" (Zone 2/22) [2]

For the 1MB1.3 Ex ec motors, the order code **B30** version (IP55) for Zones 2 and 22 must also be specified in the case of non-conductive dust. Factory certificate 2.1 analogous to that for Zones 2, 21 and 22. Please inquire about non-Siemens converters.

1) Zone 21 includes conductive and non-conductive dust.

2) The Ex motor is not admissible in an explosive atmosphere of dust and air (hybrid). A standard is not currently available that describes the product requirements for a hybrid mixture.

3) The motor contains winding version 50 Hz 230 VΔ.

© Siemens AG 2018

Technical specifications (continued)

Mechanical limit speeds of the explosion-proof motors SIMOTICS XP 1MB15, 1MB16 Ex ec, Ex tb and Ex tc

Motor frame size	Motor type	2-pole [1] n_{max} rpm	2-pole f_{max} Hz	4-pole n_{max} rpm	4-pole f_{max} Hz	6-pole n_{max} rpm	6-pole f_{max} Hz	8-pole n_{max} rpm	8-pole f_{max} Hz
1MB15, 1MB16									
71 M	1MB15	6000	100	3000	100	2000	100	1500	100
80 M	1MB15	6000	100	3000	100	2000	100	1500	100
90 L	1MB15	6000	100	3000	100	2000	100	1500	100
100 L	1MB10, 1MB15, 1MB16	5100	85	3000	100	2000	100	1500	100
112 M	1MB10, 1MB15, 1MB16	5100	85	3000	100	2000	100	1500	100
132 S/M	1MB10, 1MB15, 1MB16	3800	63.3	3000	100	2000	100	1500	100
160 M/L	1MB10, 1MB15, 1MB16	4500	75	3000	100	2000	100	1500	100
180 M/L	1MB15, 1MB16	4500	75	3000	100	2000	100	1500	100
200 L	1MB15, 1MB16	4500	75	3000	100	2000	100	1500	100
225 S/M	1MB15, 1MB16	3600	60	3000	100	2000	100	1500	100
250 M	1MB15, 1MB16	3600	60	3000	100	2000	100	1500	100
280 S/M	1MB15, 1MB16	3600	60	3000	100	2000	100	1500	100
315 S/M/L	1MB15, 1MB16	– [2]	– [2]	2600	87	2000	100	1500	100

Special technology

"Special technology" comprises technology that is compatible with explosion-proof motors.

Explosion-proof motors can be implemented in a broader range of applications when explosion-proof rotary pulse encoders or explosion-proof separately driven fans are mounted.

The use of a separately driven fan is recommended to increase motor utilization at low speeds and to limit noise generation at speeds significantly higher than the synchronous speed.

Both are normally only appropriate with converter-fed operation.

For explosion-proof motor versions with explosion-proof rotary pulse encoders or explosion-proof separately driven fans, see the tables below.

The following explosion-proof motor versions are available with explosion-proof rotary pulse encoders:

Type of protection	Motor type + order code	Frame size	Order code for explosion-proof rotary pulse encoder
Ex tb (Zone 21)	1MB101… 1MB151… 1MB161…	100 L ... 160 L 100 L ... 315 L 100 L ... 315 L	**G30**: Mounting of explosion-proof rotary pulse encoder for use in Zones 2, 21, and 22.
Ex tc (Zone 22)	1MB102… 1MB152… 1MB162…	100 L ... 160 L 100 L ... 315 L 100 L ... 315 L	
Ex ec (Zone 2)	1MB103… 1MB153… 1MB163…	100 L ... 160 L 100 L ... 315 L 100 L ... 315 L	
Ex ec or Ex tc (Zone 2/22)	1MB103… + B30 1MB153… + B30 1MB163… + B30	100 L ... 160 L 100 L ... 315 L 100 L ... 315 L	

Note:
The maximum speed of the rotary pulse encoder is limited to n_{max} = 4200 rpm.

The following explosion-proof motor versions are available with explosion-proof separately driven fans:

Type of protection	Motor type + order code	Frame size	Order code for explosion-proof separately driven fan
Ex tb (Zone 21)	1MB151… 1MB161…	225 S ... 315 L 225 S ... 315 L	**F70**: "Mounting of explosion-proof separately driven fan Ex tb for use in Zone 21".
Ex tc (Zone 22)	1MB102… 1MB152… 1MB162…	100 L ... 160 L 100 L ... 315 L 100 L ... 315 L	**F70**: "Mounting of explosion-proof separately driven fan Ex tc for use in Zone 22".
Ex ec (Zone 2)	1MB103… 1MB153… 1MB163…	100 L ... 160 L 100 L ... 315 L 100 L ... 315 L	**F70**: "Mounting of explosion-proof separately driven fan Ex ec for use in Zone 2".
Ex ec or Ex tc (Zone 2/22)	1MB103… + B30 1MB153… + B30 1MB163… + B30	100 L ... 160 L 100 L ... 315 L 100 L ... 315 L	On request

Notes:

- The motor operating data with the explosion-proof separately driven fan is available in the "Drive Technology Configurator" (DT Configurator).
- Alternatively, explosion-proof separately driven fans can also be used in line operation for special applications.

[1] For continuous operation in the range f_{max} (n_{max}), an inquiry is required.

[2] For frame size 315, converter operation is not permissible with 2 poles.

© Siemens AG 2018

Technical specifications (continued)

Explosion-proof rotary pulse encoder

The rotary pulse encoder can only be mounted on a standard non-drive end (NDE), i.e. a second shaft extension cannot be supplied.

By virtue of its design, the explosion-proof rotary pulse encoder does not have insulated bearings (please inquire).

The type of protection of the rotary pulse encoder must be observed. The relevant data is stamped on the rating plate of the rotary pulse encoder.

Attaching an explosion-proof rotary pulse encoder increases the length of the motor by Δl.
For an explanation of the additional dimensions and weights, see "Dimensions and weights of explosion-proof rotary pulse encoders".

LL 841 900 013 rotary pulse encoder (HTL version)

This encoder has a rugged construction and is therefore also suitable for difficult operating conditions. It is resistant to shock and vibration.

The LL 841 900 013 explosion-proof rotary pulse encoder is supplied with the already mounted ADS diagnostic system for early detection of errors in the encoder.
Order code **G30**

Technical specifications for LL 841 900 013 (HTL version)

Supply voltage U_B	**+9 ... +30 V**
Current input without load	max. 80 mA
Admissible load current per output	40 mA
Pulses per revolution	1024
Outputs	6 short-circuit proof square-wave pulses A, A', B, B', 0, 0', high current HTL Floating switching output for ADS signal
Pulse offset between the two outputs	90° ±2 5° el.
Output amplitude	$U_{High} > U_B - 4$ V $U_{Low} < 2.5$ V
Mark space ratio	1:1 ± 10 %
Maximum frequency	100 kHz with 350 m cable length
Maximum speed	4200 rpm (the maximum permissible speed must be observed during the configuration)
Temperature range	–40 ... +70 °C
Degree of protection	IP65
Maximum adm. radial cantilever force	150 N
Maximum adm. axial force	100 N
Connection system	Terminal strips in encoder/cable connection M20 x 1.5 radial (screw terminals)
Weight, approx.	1.7 kg

Manufacturer:
Leine und Linde AG
Olivehällsvägen 8
64542 Strängnäs, Sweden
Phone: +46 152 265 00
Fax: +46 152 265 05

www.leinelinde.com
Email: info@leinelinde.se

Dimensions and weights of the explosion-proof rotary pulse encoders

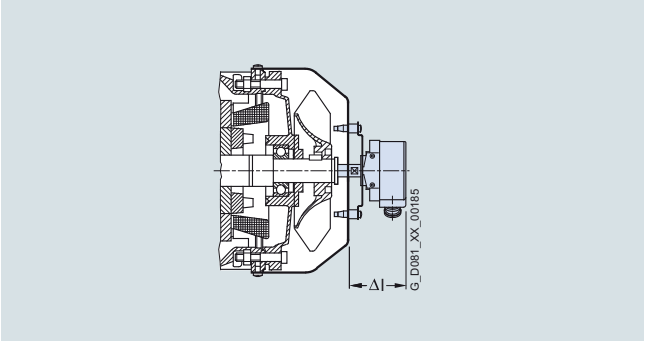

Explosion-proof rotary pulse encoder (on cover), order code **G30**

1MB10, 1MB15, 1MB16 motors		
Frame size	Δl	Weight approx.
	mm	kg
100	110	2
112	110	2
132	110	2
160	110	2
180	110	2
200	110	2
225	100	3
250	100	3
280	100	3
315	100	3

A protective cover of non-corrosive sheet steel is available for the explosion-proof rotary pulse encoders from the "special technology".
For motors in the shaft heights

- 100 to 200: a protective cover is always provided
- 225 to 315: Order code **G43** – "Mechanical protection for encoder" (protective cover analogous to order code **H00**)

The length of the motor is also increased in the case of the following shaft heights:

- 100 to 200 by up to 146 mm
- 225 to 315 by up to 25 mm

© Siemens AG 2018

Technical specifications (continued)

Explosion-proof separately driven fan

The use of a separately driven fan is recommended to increase motor utilization at low speeds or to limit noise generation at speeds significantly higher than the synchronous speed. Both of these results can only be achieved with converter operation. Please inquire about traction and vibratory operation.

In the case of explosion-proof motors, the explosion-proof separately driven fan is available already mounted.
Order code **F70**

Notes:

- The order code **F70** applies to all types of protection because the type of protection is already defined by the article number of the motor. Order code **F70** determines the additional charge for the separately driven fan in the assigned type of protection.
- The motor operating data with the explosion-proof separately driven fan is available in the "Drive Technology Configurator" (DT Configurator).

The supply voltage for the explosion-proof motors with separately driven fan is specified as follows:

Type 2CW2 has a wide-range voltage winding
(see page 5/12 "Technical specifications of separately driven fans for 1MB1 explosion-proof motors (frame sizes 100 to 200) in the Ex tc (Zone 22) and Ex ec (Zone 2) versions").
These explosion-proof motors with separately driven fan up to frame size 200 have a rated voltage (rated voltage range) with tolerances according to IEC/EN 60034-1, range A.

A rating plate with the operating data is fitted to each explosion-proof motor with separately driven fan.

The type of protection of the explosion-proof motor with separately driven fan corresponds to that of the associated explosion-proof basic motor. Please note the direction of rotation of the separately driven fan (axial-flow fan) when connecting it.

Please inquire regarding coolant temperatures outside the range –20 to +40 °C.

The Ex ec /Ex tc motor with separately driven fan has the degree of protection IP55 as standard; Ex tb: IP65. (Higher degrees of protection with Ex ec are available on request.)

Motors with a separately driven fan must be equipped with a PTC thermistor as motor protection (15th position of the Article No.): In the event of a fault in the forced ventilation, the PTC thermistor must reliably trip the 1MB1 explosion-proof motor.

For assignments and article numbers, see the tables "Technical specifications of separately driven fans for explosion-proof motors 1MB1…" on the following pages. A rating plate listing all the important data is fitted to the separately driven fan. Please inquire in the case of supply voltages outside of the rated voltage range. Please note the direction of rotation of the separately driven fan (axial-flow fan) when connecting it. The permissible coolant temperatures are CT_{min} –20 °C and CT_{max} +40 °C. Lower coolant temperatures are available on request.

When the separately driven fan is mounted, the length of the motor increases by Δl. For an explanation of the additional dimensions and weights, see "Dimensions and weights of explosion-proof separately driven fans".

© Siemens AG 2018

Technical specifications (continued)

Technical specifications of separately driven fans for 1MB1 explosion-proof motors (frame sizes 100 to 200) in the Ex tc (Zone 22) and Ex ec (Zone 2) versions

Technical specifications of separately driven fans (according to tolerances of EN 60034-1)

Frame size	Rated voltage range	Frequency	Power consumption	Rated current
	V	Hz	kW	A
100	1 AC 220 ... 277	50	0.066	0.28
	3 AC 200 ... 303 Δ	50	0.091	0.37
	3 AC 346 ... 525 Y	50	0.091	0.22
	1 AC 220 ... 277	60	0.075	0.30
	3 AC 220 ... 332 Δ	60	0.087	0.31
	3 AC 380 ... 575 Y	60	0.087	0.18
112	1 AC 220 ... 277	50	0.071	0.28
	3 AC 200 ... 303 Δ	50	0.097	0.35
	3 AC 346 ... 525 Y	50	0.097	0.20
	1 AC 220 ... 277	60	0.094	0.37
	3 AC 220 ... 332 Δ	60	0.103	0.31
	3 AC 380 ... 575 Y	60	0.103	0.18
132	1 AC 230 ... 277	50	0.098	0.40
	3 AC 200 ... 303 Δ	50	0.124	0.58
	3 AC 346 ... 525 Y	50	0.124	0.33
	1 AC 230 ... 277	60	0.149	0.57
	3 AC 220 ... 332 Δ	60	0.148	0.44
	3 AC 380 ... 575 Y	60	0.148	0.25
160 ... 200	1 AC 230 ... 277	50	0.253	0.97
	3 AC 200 ... 303 Δ	50	0.247	0.87
	3 AC 346 ... 525 Y	50	0.247	0.50
	3 AC 220 ... 332 Δ	60	0.360	0.93
	3 AC 380 ... 575 Y	60	0.360	0.56

Technical specifications of separately driven fans for 1MB1 explosion-proof motors (frame sizes 225 to 315) in the Ex tb (Zone 21), Ex tc (Zone 22) and Ex ec (Zone 2) versions

Frame size	Designation on rating plate of separately driven fan	Rated voltage range	Frequency	Rated speed	Power consumption	Rated current for rated voltage
		V	Hz	rpm	kW	A
225 M ... 280 M	1LA7073-2AA62-Z	3 AC 230 Δ	50	2800	0.550	1.36
		3 AC 400 Y	50	2800	0.550	0.79
		3 AC 460 Y	60	3400	0.630	1.32
315 – 2-pole	1LA9073-2LA92-Z	3 AC 230 Δ	50	2780	0.700	1.73
		3 AC 400 Y	50	2780	0.700	1.00
		3 AC 460 Y	60	3385	0.700	1.64
315 – 4, 6, 8-pole	1LA7073-2AA62-Z	3 AC 230 Δ	50	2800	0.550	1.36
		3 AC 400 Y	50	2800	0.550	0.79
		3 AC 460 Y	60	3400	0.630	1.32

© Siemens AG 2018

Technical specifications (continued)

Dimensions and weights of the explosion-proof separately driven fans (order code **F70**)

1MB102, 1MB152, 1MB162, 1MB103, 1MB153, 1MB163
Frame sizes 100 to 200
Explosion-proof separately driven fans
Ex tc, Ex ec

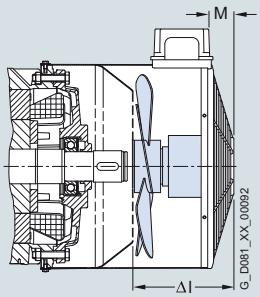

Frame size	Type of protection/motor type Ex tc (Zone 22)/1MB102, 1MB152, 1MB162 Ex ec (Zone 2)/1MB103, 1MB153, 1MB163 ΔI	Weight approx.
	mm	kg
100	141	4
112	158	4.5
132	177	5.5
160	227	7
180	269	10
200	272	11

1MB151, 1MB161, 1MB152, 1MB162, 1MB153, 1MB163
Frame sizes 225 to 315
Explosion-proof separately driven fans
Ex tb, Ex tc, Ex ec

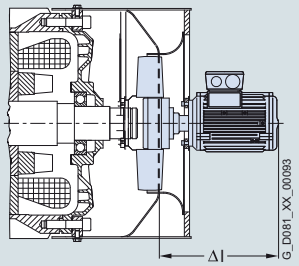

Frame size	Type of protection/motor type Ex tb (Zone 21)/1MB151, 1MB161 Ex tc (Zone 22)/1MB152, 1MB162 Ex ec (Zone 2)/1MB153, 1MB163 ΔI	Weight approx.
	mm	kg
225	267	24.5
250	272	27.5
280	270	30.5
315	280	38.5

© Siemens AG 2018

Technical specifications (continued)

VIK version

VIK = Verband der Industriellen Energie- und Kraftwirtschaft e.V. (German Association of the Energy and Power Supply Industry)

- **VIK standard version** –
  1LE1 + order code **C02**
  "VIK" identification on rating plate.
  ➔ Product range in Catalog Section 2.
- **VIK-Ex ec version for line operation** –
  1MB1.3 + order code **C02**
  "VIK" and "Ex ec IIC T3 Gc" marking on the rating plate according to Directive 2014/34/EU (ATEX).
  ➔ Product range in this Catalog Section.
- **VIK Ex ec version for converter operation** –
  1MB1.3 + order code **C02**+**B40**/**B41**+...
  "VIK" and "Ex ec IIC T3 Gc" markings on the rating plate and motor operating data for converter operation on the additional rating plate according to Directive 2014/34/EU (ATEX).

Both versions include technology for Zone 2 to type of protection Ex ec IIC T3 Gc. Motors up to frame size 355 can be supplied in accordance with the technical requirements of the VIK recommendation.

Minimum efficiency class:

- VIK standard version:
  IE3 from 0.75 kW in accordance with legal requirements.
- VIK-Ex ec version:
  At least IE3 in accordance with January 2018 edition of VIK recommendation.

Notes:

- 8-pole motors or all motors < 0.75 kW are still possible as these motors are outside the power range specified for IE stamping.
- Motors in VIK standard version (1LE1) with mountings (brake, rotary pulse encoder and separately driven fan) are not compatible with Zone 2. Versions for Zone 21/22 are not possible.
- 1LA/1LG VIK motors: See Catalog D 81.1 · July 2011.

Ex certification EAC for the Eurasian customs union (Russia, Belarus, and Kazakhstan)

EAC = Eurasian Conformity

For the import and commissioning of explosion-proof motors in the Eurasian customs union, approval is required from a named Russian testing authority.

"Ex certificate EAC for the Eurasian customs union"
Order code **D35**

The explosion-proof motors in this catalog section all have Eurasian ex certification except for the following:

- 1MB10, frame sizes 80 and 90
- 1MB15, frame sizes 71 to 90
- 1MB15/6, frame sizes 225 to 315, in type of protection Ex tb
- 1MB1 in version for converter operation

When motors are ordered with order code **D35**, they are fitted with an additional rating plate displaying the logo "EAC Ex" and the Russian Ex marking.

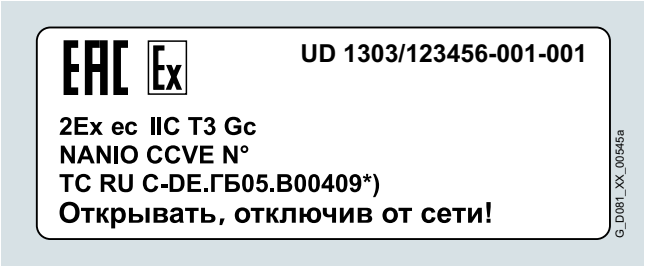

Example: Additional rating plate

The "EAC Ex" logo can also be found on the package label. The motor must have an "EAC Ex certificate", although the certificate does not generally have to be shipped with the motor. The customs authorities use the motor article number to check the motor certification.
A copy of the EAC Ex certificate must be in the customer's possession before the motor is commissioned.
The certificates are available from the SIOS (Siemens Industry Online Support) portal as well as the "Drive Technology Configurator" (DT Configurator).

Coolant temperature

Coolant temperature –40 to +40 °C for explosion-proof motor

For all 1MB10 motors, frame sizes 100 to 160 and 1MB15/6, frame sizes 100 to 315 in explosion protection types Ex ec or Ex t (Zone 21/22), the operating ambient temperature range can be optionally increased to –40 °C. Extensive technical measures are necessary in this case.

Order code **D03**

Order code **D03** is not possible in combination with order code **H02** "Vibration-proof version".

© Siemens AG 2018

Selection and ordering data

The article number consists of a combination of digits and letters and is divided into three hyphenated blocks to provide a better overview, e.g.:
1MB1511-1DB22-2AB4-Z
R10

The first block (positions 1 to 7) identifies the motor type. The second block (positions 8 to 12) defines the motor frame size and length, the number of poles and in some cases the frequency/voltage. In the third block (positions 13 to 16), the frequency/voltage, type of construction and further design features are encoded.

For deviations in the second and third block from the catalog codes either **Z** or **90** should be used as appropriate.

Ordering data:

- Complete Article No. and order code(s) or plain text
- If a quotation has been requested, please specify the quotation number in addition to the Article No.
- When ordering a complete motor as a spare part, please specify the works serial No. for the previously supplied motor as well as the Article No.

Structure of the Article No.:			Position:	1	2	3	4	5	6	7	-	8	9	10	11	12	-	13	14	15	16	
1st to 4th position: Digit, letter, letter, digit	Explosion-proof – Self-ventilated by fan mounted on and driven by rotor			**1**	**M**	**B**	**1**															
5th position: Digit	Aluminum housing							**0**														
	Cast-iron housing Basic Line							**5**														
	Cast-iron housing Performance Line							**6**														
6th to 7th position: 2 digits	Ex tb IIIC (Ex-Zone 21)	Motors with IE2 High Efficiency							**1**	**1**												
		Motors with IE1 Standard Efficiency							**1**	**2**												
		Motors with IE3 Premium Efficiency							**1**	**3**												
	Ex tc IIIB (Ex Zone 22)	Motors with IE2 High Efficiency							**2**	**1**												
		Motors with IE1 Standard Efficiency							**2**	**2**												
		Motors with IE3 Premium Efficiency							**2**	**3**												
	Ex ec IIC T3 (Ex Zone 2)	Motors with IE2 High Efficiency							**3**	**1**												
		Motors with IE1 Standard Efficiency							**3**	**2**												
		Motors with IE3 Premium Efficiency							**3**	**3**												
8th, 9th and 11th position: Digit, letter, digit	**Motor frame size** (frame size as a combination of shaft height and overall length, encoded)											**0** ... **3**	**A** ... **E**		**0** ... **6**							
10th position: Letter	**No. of poles** A: 2-pole, B: 4-pole, C: 6-pole, D: 8-pole													**A** ... **D**								
12th and 13th position: 2 digits	**Voltage, circuit and frequency** (encoded with two digits, 9-0 requires order code M.. (e.g. M1Y))															**0** ... **9**		**0** ... **8**				
14th position: Letter	**Type of construction** (encoded with A ... V)																		**A** ... **V**			
15th position: Letter	**Motor protection** (encoded with A ... J)																			**A** ... **J**		
16th position: Digit	**Terminal box position** 4: Terminal box top, 5: Terminal box right, 6: Terminal box left, 7: Terminal box bottom																				**4** ... **7**	
	Special order versions: encoded – additional order code required not encoded – additional plain text required																					- **Z**

Ordering example

Selection criteria	Requirement	Structure of the Article No.
Motor type 1MB1	Self-ventilated motor with explosion protection of type Ex tb IIIC (Ex Zone 21), cast-iron version, with IE2 High Efficiency, IP55 degree of protection	1MB1511-■■■■■-■■■■
Motor frame size/No. of poles/Speed	160 M/4-pole/1500 rpm	1MB1511-1DB2■-■■■■
Rated power	11 kW	
Voltage and frequency	230 VΔ/400 VY, 50 Hz	1MB1511-1DB22-2■■■
Type of construction with special version	IM B3	1MB1511-1DB22-2A■■
Motor protection	Motor protection with PTC thermistor with 3 embedded temperature sensors for tripping	1MB1511-1DB22-2AB■
Terminal box position	Terminal box at top	1MB1511-1DB22-2AB4
Special version	Rotation of the terminal box through 90°, entry from DE	1MB1511-1DB22-2AB4-Z R10

© Siemens AG 2018

Self-ventilated motors with IE3 Premium Efficiency · Aluminum series 1MB10

Selection and ordering data

P_{rated}, 50 Hz	P_{rated}, 60 Hz	Frame size	Operating values at rated power: n_{rated}, 50 Hz	T_{rated}, 50 Hz	Different IE class 60 Hz/P60	η_{rated}, 50 Hz, 4/4	η_{rated}, 50 Hz, 3/4	η_{rated}, 50 Hz, 2/4	cos φ_{rated}, 50 Hz, 4/4	I_{rated}, 50 Hz, 400 V	T_{LR}/T_{rated}	I_{LR}/I_{rated}	T_B/T_{rated}	L_{pfA}, 50 Hz	L_{WA}, 50 Hz	Aluminum series 1MB1 Article No.	$m_{IM\ B3}$	J
kW	kW	FS	rpm	Nm		%	%	%		A				dB(A)	dB(A)		kg	kgm^2
• Cooling: self-ventilated (IC 411) • Efficiency according to IEC 60034-30: IE3 Premium Efficiency • Insulation: Thermal class 155 (temperature class F), IP55 degree of protection, utilization in accordance with thermal class 130 (temperature class B)																		
2-pole: 3000 rpm at 50 Hz, 3600 rpm at 60 Hz [1]																		
0.75	**0.86**	**80 M**	2850	2.5		80.7	82.2	81.9	0.86	1.56	2.6	6.2	3	60	71	**1MB10■3-0DA2■-■■■■**	11	0.0011
1.1	**1.27**	**80 M**	2885	3.6		82.7	83.9	83.1	0.85	2.25	3	7.1	3.3	60	71	**1MB10■3-0DA3■-■■■■**	12	0.0013
1.5	**1.75**	**90 S**	2910	4.9		84.2	84.6	83.2	0.86	3	2.7	8.1	4.2	65	77	**1MB10■3-0EA0■-■■■■**	15	0.0021
2.2	**2.55**	**90 L**	2910	7.2		85.9	86.8	86.1	0.88	4.2	2.6	8.3	4	65	77	**1MB10■3-0EA4■-■■■■**	19	0.0031
3	**3.45**	**100 L**	2920	9.8		87.1	87.9	87.5	0.88	5.6	3.2	8.1	4.6	67	79	**1MB10■3-1AA4■-■■■■**	26	0.0054
4	**4.55**	**112 M**	2950	13		88.1	88.7	88.2	0.89	7.4	2.5	8.7	4	69	81	**1MB10■3-1BA2■-■■■■**	34	0.012
5.5	**6.3**	**132 S**	2950	18		89.2	90.1	89.7	0.9	9.9	1.9	7.3	3.7	68	80	**1MB10■3-1CA0■-■■■■**	43	0.024
7.5	**8.6**	**132 S**	2950	24		90.1	90.9	90.7	0.92	13.1	2.1	8.3	4	68	80	**1MB10■3-1CA1■-■■■■**	57	0.031
11	**12.6**	**160 M**	2955	36		91.2	91.3	90.2	0.87	20	2.5	7.6	3.8	70	82	**1MB10■3-1DA2■-■■■■**	75	0.053
15	**17.3**	**160 M**	2960	48		91.9	91.9	91	0.87	27	2.8	8.8	4.3	70	82	**1MB10■3-1DA3■-■■■■**	84	0.061
18.5	**21.3**	**160 L**	2955	60		92.4	92.8	92.3	0.9	32	2.8	8.3	3.9	70	82	**1MB10■3-1DA4■-■■■■**	94	0.068
4-pole: 1500 rpm at 50 Hz, 1800 rpm at 60 Hz [1]																		
0.55	**0.63**	**80 M**	1440	3.6		80.8	81.1	79.3	0.78	1.26	2.1	5.9	3.1	53	64	**1MB10■3-0DB2■-■■■■**	11	0.0021
0.75	**0.86**	**80 M**	1450	4.9		82.5	82.3	79.9	0.75	1.75	2.7	7.1	3.9	53	64	**1MB10■3-0DB3■-■■■■**	14	0.0029
1.1	**1.27**	**90 S**	1440	7.3		84.1	84.7	83.4	0.78	2.4	2.9	6.9	3.6	56	68	**1MB10■3-0EB0■-■■■■**	16	0.0036
1.5	**1.75**	**90 L**	1445	10		85.3	85.9	84.9	0.8	3.15	2.7	7.2	3.6	56	68	**1MB10■3-0EB4■-■■■■**	19	0.0049
2.2	**2.55**	**100 L**	1465	14.3		86.7	87	85.9	0.83	4.4	3.2	8.4	4.4	60	72	**1MB10■3-1AB4■-■■■■**	30	0.014
3	**3.45**	**100 L**	1460	19.6		87.7	88.5	87.9	0.83	5.9	2.5	8.3	3.9	60	72	**1MB10■3-1AB5■-■■■■**	30	0.014
4	**4.55**	**112 M**	1460	26		88.6	89.2	88.6	0.82	7.9	2.4	7.1	3.7	58	70	**1MB10■3-1BB2■-■■■■**	34	0.017
5.5	**6.3**	**132 S**	1470	36		89.6	90	89.4	0.82	10.8	2.9	8.6	3.7	64	76	**1MB10■3-1CB0■-■■■■**	64	0.046
7.5	**8.6**	**132 M**	1465	49		90.4	91.1	90.8	0.84	14.3	2.6	8.2	3.7	64	76	**1MB10■3-1CB2■-■■■■**	64	0.046
11	**12.6**	**160 M**	1475	71		91.4	91.8	91.2	0.84	20.5	2.6	7.6	3.4	65	77	**1MB10■3-1DB2■-■■■■**	83	0.083
15	**17.3**	**160 L**	1475	97		92.1	92.3	91.5	0.82	28.5	2.5	8.5	3.8	65	77	**1MB10■3-1DB4■-■■■■**	100	0.099
6-pole: 1000 rpm at 50 Hz, 1200 rpm at 60 Hz [1]																		
0.37	**0.43**	**80 M**	940	3.8		73.5	73.1	69.4	0.66	1.1	2.3	4.2	2.7	42	53	**1MB10■3-0DC2■-■■■■**	12	0.0025
0.55	**0.63**	**80 M**	935	5.6		77.2	77	73.9	0.67	1.53	2.5	4.5	2.8	42	53	**1MB10■3-0DC3■-■■■■**	14	0.0031
0.75	**0.86**	**90 S**	945	7.6		78.9	80	78.8	0.7	1.96	2.2	4.6	2.6	43	55	**1MB10■3-0EC0■-■■■■**	16	0.004
1.1	**1.27**	**90 L**	940	11	IE1	81	82	80.5	0.69	2.85	2.3	4.6	2.7	43	55	**1MB10■3-0EC4■-■■■■**	19	0.0048
1.5	**1.75**	**100 L**	970	14.8	IE2	82.5	83.1	81.5	0.73	3.6	1.9	5.2	2.8	59	71	**1MB10■3-1AC4■-■■■■**	30	0.014
2.2	**2.55**	**112 M**	970	22	IE2	84.3	85	83.9	0.75	5	2.2	5.6	2.8	65	74	**1MB10■3-1BC2■-■■■■**	39	0.014
3	**3.45**	**132 S**	980	29		85.6	86.3	85.7	0.76	6.7	2	6.3	3	63	75	**1MB10■3-1CC0■-■■■■**	43	0.029
4	**4.55**	**132 M**	975	39		86.8	87.7	87.4	0.76	8.8	2	6.1	2.8	63	75	**1MB10■3-1CC2■-■■■■**	52	0.037
5.5	**6.3**	**132 M**	975	54		88	88.9	88.5	0.76	11.9	2	6.3	2.9	63	75	**1MB10■3-1CC3■-■■■■**	52	0.037
7.5	**8.6**	**160 M**	980	73		89.1	89.8	89.2	0.76	16	2	5.1	2.3	67	79	**1MB10■3-1DC2■-■■■■**	93	0.098
11	**12.6**	**160 L**	975	108		90.3	91.1	90.7	0.77	23	2	5.1	2.4	67	79	**1MB10■3-1DC4■-■■■■**	115	0.12

Option		Version	Code	Order code
Zones				
Zone 21 (occasionally conductive and non-conductive dust) Ex tb IIIC			1	
Zone 22 (rarely conductive or temporarily non-conductive dust) Ex tc IIIB			2	
Zone 2 (rarely explosive or temporarily explosive gases) Ex ec IIC			3	
Voltages		Version		Order code
50 Hz 230 VΔ/400 VY	60 Hz [1] 460 VY	**Standard**	2 2	–
50 Hz 400 VΔ/690 VY	60 Hz [1] 460 VΔ	**Standard**	3 4	–
50 Hz 500 VY		Without additional charge	2 7	–
50 Hz 500 VΔ		Without additional charge	4 0	–
For other voltages [1] and more information, see from page 5/28			9 0	. . .
Types of construction		Version		Order code
Without flange	IM B3 [2]	**Standard**	A	–
With flange	IM B5 [2]	With additional charge	F	–
With flange	IM B14 [2]	With additional charge	K	–
For other types of construction and more information, see from page 5/30			■	. . .
Motor protection		Version		
Without		**Standard**	A	
PTC thermistor with 1 or 3 temperature sensors (frame sizes 80, 90 or 100 to 200)		With additional charge	B	
For other motor protection and more information, see from page 5/34			■	
Terminal box position		Version		
Terminal box at top		**Standard**	4	
For other terminal box positions and more information, see from page 5/36			■	
Special versions				Order code(s)
For options, see from page 5/38			**1MB10■3-. . . . ■-■■■■**-Z	. . .+. . .+. . .+. . .

For footnotes, see page 5/27

© Siemens AG 2018

Selection and ordering data

P_{rated}, 50 Hz	P_{rated}, 60 Hz	Frame size	n_{rated}, 50 Hz	T_{rated}, 50 Hz	Different IE class 60 Hz/P60	η_{rated}, 50 Hz, 4/4	η_{rated}, 50 Hz, 3/4	η_{rated}, 50 Hz, 2/4	cos φ_{rated}, 50 Hz, 4/4	I_{rated}, 50 Hz, 400 V	T_{LR}/T_{rated}	I_{LR}/I_{rated}	T_B/T_{rated}	L_{pfA}, 50 Hz	L_{WA}, 50 Hz	Cast-iron series 1MB15.3 – *Basic Line* 1MB16.3 – *Performance Line* Article No.	$m_{IM B3}$	J
kW	kW	FS	rpm	Nm		%	%	%		A				dB(A)	dB(A)		kg	kgm²
• Cooling: self-ventilated (IC 411) • Efficiency according to IEC 60034-30: IE3 Premium Efficiency • Insulation: Thermal class 155 (temperature class F), IP55 degree of protection, utilization in accordance with thermal class 130 (temperature class B)																		
2-pole: 3000 rpm at 50 Hz, 3600 rpm at 60 Hz [1]																		
0.37	**0.43**	**71 M**	2850	1.2		73.8	73.3	69.7	0.76	0.95	3.5	5.8	3.5	52	63	**1MB1 5 ■3-0CA2■-■■■■**	13	0.00045
0.55	**0.63**	**71 M**	2860	1.8		77.8	77.5	74.5	0.76	1.34	3.7	6.1	3.7	57	68	**1MB1 5 ■3-0CA3■-■■■■**	14.5	0.00056
0.75	**0.88**	**80 M**	2850	2.5		80.7	82.2	81.9	0.86	1.56	2.6	6.2	3	60	71	**1MB1 5 ■3-0DA2■-■■■■**	18	0.0011
1.1	**1.27**	**80 M**	2885	3.6		82.7	83.9	83.1	0.85	2.25	3	7.1	3.3	60	71	**1MB1 5 ■3-0DA3■-■■■■**	21	0.0013
1.5	**1.75**	**90 S**	2910	4.9		84.2	84.6	83.2	0.86	3	2.7	8.1	4.2	65	77	**1MB1 5 ■3-0EA0■-■■■■**	25.5	0.0021
2.2	**2.55**	**90 L**	2910	7.2		85.9	86.8	86.1	0.88	4.2	2.6	8.3	4	65	77	**1MB1 5 ■3-0EA4■-■■■■**	32	0.0031
3	**3.45**	**100 L**	2920	9.8		87.1	87.9	87.5	0.88	5.6	3.2	8.1	4.6	67	79	**1MB1■■3-1AA4■-■■■■**	36	0.0054
4	**4.55**	**112 M**	2950	13		88.1	88.7	88.2	0.89	7.4	2.5	8.7	4	69	81	**1MB1■■3-1BA2■-■■■■**	45	0.012
5.5	**6.3**	**132 S**	2950	18		89.2	90.1	89.7	0.9	9.9	1.9	7.3	3.7	68	80	**1MB1■■3-1CA0■-■■■■**	58	0.024
7.5	**8.6**	**132 S**	2950	24		90.1	90.9	90.7	0.92	13.1	2.1	8.3	4	68	80	**1MB1■■3-1CA1■-■■■■**	73	0.031
11	**12.6**	**160 M**	2955	36		91.2	91.3	90.2	0.87	20	2.5	7.6	3.8	70	82	**1MB1■■3-1DA2■-■■■■**	100	0.053
15	**17.3**	**160 M**	2960	48		91.9	91.9	91	0.87	27	2.8	8.8	4.3	70	82	**1MB1■■3-1DA3■-■■■■**	110	0.061
18.5	**21.3**	**160 L**	2955	60		92.4	92.8	92.3	0.9	32	2.8	8.3	3.9	70	82	**1MB1■■3-1DA4■-■■■■**	127	0.068
22	**24.5**	**180 M**	2950	71		92.7	93	92.4	0.89	38.5	2.3	7.5	3.5	67	80	**1MB1■■3-1EA2■-■■■■**	160	0.08
30	**33.5**	**200 L**	2955	97		93.3	93.6	93.3	0.87	53	2.5	7	3.3	67	80	**1MB1■■3-2AA4■-■■■■**	225	0.134
37	**41.5**	**200 L**	2955	120		93.7	93.9	93.5	0.88	65	2.5	7.1	3.2	67	80	**1MB1■■3-2AA5■-■■■■**	250	0.158
45	**51**	**225 M**	2960	145		94	94.5	94.4	0.89	78	2.4	6.9	3.3	73	87	**1MB1■■3-2BA2■-■■■■**	315	0.26
55	**62**	**250 M**	2975	177		94.3	94.5	93.9	0.89	95	2.3	6.7	3.1	73	87	**1MB1■■3-2CA2■-■■■■**	385	0.46
75	**84**	**280 S**	2975	241	IE2	94.7	94.8	94.1	0.89	128	2.4	6.8	3	74	88	**1MB1■■3-2DA0■-■■■■**	510	0.77
90	**101**	**280 M**	2975	289	IE2	95	95.1	94.6	0.9	152	2.4	7.2	3.1	74	88	**1MB1■■3-2DA2■-■■■■**	590	0.94
110	**123**	**315 S**	2982	352		95.2	95.4	94.9	0.91	183	2.4	7.1	3.1	75	89	**1MB1■■3-3AA0■-■■■■**	750	1.4
132	**148**	**315 M**	2982	423		95.4	95.5	95.2	0.91	220	2.5	7.2	3.1	75	89	**1MB1■■3-3AA2■-■■■■**	880	1.6
160	**180**	**315 L**	2982	512	IE2	95.6	95.7	95.2	0.92	265	2.8	7.8	3.3	77	91	**1MB1■■3-3AA4■-■■■■**	980	1.9
200	**224**	**315 L**	2982	640		95.8	95.9	95.5	0.92	330	2.5	7.2	3	77	91	**1MB1■■3-3AA5■-■■■■**	1150	2.3

			Article No. position	Order code
Basic Line			5	
Performance Line			6	
Zones				
Zone 21 (occasionally conductive and non-conductive dust) Ex tb IIIC			1	
Zone 22 (rarely conductive or temporarily non-conductive dust) Ex tc IIIB			2	
Zone 2 (rarely explosive or temporarily explosive gases) Ex ec IIC			3	
Voltages [3]		Version		Order code
50 Hz 230 VΔ/400 VY	60 Hz [1] 460 VY	**Standard**	2 2	–
50 Hz 400 VΔ/690 VY	60 Hz [1] 460 VΔ	**Standard**	3 4	–
50 Hz 500 VY		Without additional charge	2 7	–
50 Hz 500 VΔ		Without additional charge	4 0	–
For other voltages [1] and more information, see from page 5/29			9 0	. . .
Types of construction		Version		Order code
Without flange	IM B3 [2]	**Standard**	A	–
With flange	IM B5 [2]	With additional charge	F	–
With flange	IM B14 [2]	With additional charge	K	–
For other types of construction and more information, see from page 5/32			■	. . .
Motor protection	Line	Version		
Without	Only possible for **Basic Line**	**Standard**	A	
PTC thermistor with 3 temperature sensors	**Basic Line**	With additional charge	B	
	Performance Line	**Standard**	B	
For other motor protection and more information, see from page 5/35			■	
Terminal box position		Version		
Terminal box at top		**Standard**	4	
For other terminal box positions and more information, see from page 5/37			■	
Special versions				Order code(s)
For options, see from page 5/42			**1MB1■■3- . . . . ■-■■■■-Z**	. . .+. . .+. . .+. . .

For footnotes, see page 5/27

© Siemens AG 2018

Selection and ordering data (continued)

P_{rated}, 50 Hz	P_{rated}, 60 Hz	Frame size	Operating values at rated power: n_{rated}, 50 Hz	T_{rated}, 50 Hz	Different IE class 60 Hz/P60	η_{rated}, 50 Hz, 4/4	η_{rated}, 50 Hz, 3/4	η_{rated}, 50 Hz, 2/4	$\cos \varphi_{rated}$, 50 Hz, 4/4	I_{rated}, 50 Hz, 400 V	T_{LR}/T_{rated}	I_{LR}/I_{rated}	T_B/T_{rated}	L_{pfA}, 50 Hz	L_{WA}, 50 Hz	Cast-iron series 1MB15.3 – *Basic Line*, 1MB16.3 – *Performance Line* Article No.	$m_{IM B3}$	J
kW	kW	FS	rpm	Nm		%	%	%		A				dB(A)	dB(A)		kg	kgm²
• Cooling: self-ventilated (IC 411) • Efficiency according to IEC 60034-30: IE3 Premium Efficiency • Insulation: Thermal class 155 (temperature class F), IP55 degree of protection, utilization in accordance with thermal class 130 (temperature class B)																		
4-pole: 1500 rpm at 50 Hz, 1800 rpm at 60 Hz [1]																		
0.25	**0.29**	**71 M**	1395	1.7		73.5	73.6	70.4	0.72	0.68	2.5	4.2	2.6	44	55	**1MB1 5 ■3-0CB2■-■■■■**	13	0.00095
0.37	**0.43**	**71 M**	1410	2.6		77.3	76.8	73.2	0.7	0.99	3.1	4.8	3.1	56	67	**1MB1 5 ■3-0CB3■-■■■■**	16	0.0014
0.55	**0.63**	**80 M**	1440	3.6		80.8	81.1	79.3	0.78	1.26	2.1	5.9	3.1	53	64	**1MB1 5 ■3-0DB2■-■■■■**	18.5	0.0021
0.75	**0.88**	**80 M**	1450	4.9		82.5	82.3	79.9	0.75	1.75	2.7	7.1	3.9	53	64	**1MB1 5 ■3-0DB3■-■■■■**	22.5	0.0029
1.1	**1.27**	**90 S**	1440	7.3		84.1	84.7	83.4	0.78	2.4	2.9	6.9	3.6	56	68	**1MB1 5 ■3-0EB0■-■■■■**	25	0.0036
1.5	**1.75**	**90 L**	1445	10		85.3	85.9	84.9	0.8	3.15	2.7	7.2	3.6	56	68	**1MB1 5 ■3-0EB4■-■■■■**	31	0.0049
2.2	**2.55**	**100 L**	1465	14.3		86.7	87	85.9	0.83	4.4	3.2	8.4	4.4	60	72	**1MB1■■3-1AB4■-■■■■**	40	0.014
3	**3.45**	**100 L**	1460	19.6		87.7	88.5	87.9	0.83	5.9	2.5	8.3	3.9	60	72	**1MB1■■3-1AB5■-■■■■**	40	0.014
4	**4.55**	**112 M**	1460	26		88.6	89.2	88.6	0.82	7.9	2.4	7.1	3.7	58	70	**1MB1■■3-1BB2■-■■■■**	46	0.017
5.5	**6.3**	**132 S**	1470	36		89.6	90	89.4	0.82	10.8	2.9	8.6	3.7	64	76	**1MB1■■3-1CB0■-■■■■**	74	0.046
7.5	**8.6**	**132 M**	1465	49		90.4	91.1	90.8	0.84	14.3	2.6	8.2	3.7	64	76	**1MB1■■3-1CB2■-■■■■**	80	0.046
11	**12.6**	**160 M**	1475	71		91.4	91.8	91.2	0.84	20.5	2.6	7.6	3.4	65	77	**1MB1■■3-1DB2■-■■■■**	109	0.083
15	**17.3**	**160 L**	1475	97		92.1	92.3	91.5	0.82	28.5	2.5	8.5	3.8	65	77	**1MB1■■3-1DB4■-■■■■**	127	0.099
18.5	**21.3**	**180 M**	1470	120		92.6	93.1	93	0.82	35	2.5	7.2	3.3	66	73	**1MB1■■3-1EB2■-■■■■**	165	0.13
22	**25.3**	**180 L**	1470	143		93	93.6	93.6	0.83	41	2.3	6.8	3.3	68	75	**1MB1■■3-1EB4■-■■■■**	170	0.14
30	**34.5**	**200 L**	1470	195	IE2	93.6	94.2	94.2	0.84	55	2.6	7.3	3.1	65	72	**1MB1■■3-2AB5■-■■■■**	240	0.22
37	**42.5**	**225 S**	1478	239	IE2	93.9	94.5	94.4	0.86	66	2.5	6.4	2.7	65	78	**1MB1■■3-2BB0■-■■■■**	285	0.42
45	**52**	**225 M**	1478	291	IE2	94.2	94.9	95.1	0.86	80	2.6	6.4	2.7	65	78	**1MB1■■3-2BB2■-■■■■**	320	0.47
55	**63**	**250 M**	1482	354	IE2	94.6	95.1	95	0.87	96	2.5	6.8	2.9	66	79	**1MB1■■3-2CB2■-■■■■**	420	0.85
75	**86**	**280 S**	1485	482	IE2	95	95.3	95	0.86	133	2.5	6.9	3	69	83	**1MB1■■3-2DB0■-■■■■**	570	1.4
90	**104**	**280 M**	1485	579	IE2	95.2	95.5	95.3	0.87	157	2.6	7.2	3	70	84	**1MB1■■3-2DB2■-■■■■**	670	1.7
110	**127**	**315 S**	1488	706		95.4	95.8	95.5	0.87	191	2.6	6.8	2.9	70	84	**1MB1■■3-3AB0■-■■■■**	760	2.2
132	**152**	**315 M**	1490	846		95.6	95.9	95.9	0.87	230	2.8	7.3	3	73	87	**1MB1■■3-3AB2■-■■■■**	960	2.9
160	**184**	**315 L**	1490	1025		95.8	96.1	96.1	0.87	275	2.9	7.3	3.1	73	87	**1MB1■■3-3AB4■-■■■■**	990	3.1
200	**230**	**315 L**	1488	1284	IE2	96	96.3	96.1	0.88	340	3.2	7.4	3	73	87	**1MB1■■3-3AB5■-■■■■**	1190	3.7

			Article No. position	Order code
Basic Line			5	
Performance Line			6	
Zones				
Zone 21 (occasionally conductive and non-conductive dust) Ex tb IIIC			1	
Zone 22 (rarely conductive or temporarily non-conductive dust) Ex tc IIIB			2	
Zone 2 (rarely explosive or temporarily explosive gases) Ex ec IIC			3	
Voltages [3]		Version		Order code
50 Hz 230 VΔ/400 VY	60 Hz [1] 460 VY	**Standard**	2 2	–
50 Hz 400 VΔ/690 VY	60 Hz [1] 460 VΔ	**Standard**	3 4	–
50 Hz 500 VY		Without additional charge	2 7	–
50 Hz 500 VΔ		Without additional charge	4 0	–
For other voltages [1] and more information, see from page 5/29			9 0	. . .
Types of construction		Version		Order code
Without flange	IM B3 [2]	**Standard**	A	–
With flange	IM B5 [2]	With additional charge	F	–
With flange	IM B14 [2]	With additional charge	K	–
For other types of construction and more information, see from page 5/32			■	. . .
Motor protection		Version		
Without	Only possible for **Basic Line**	**Standard**	A	
PTC thermistor with 3 temperature sensors	**Basic Line**	With additional charge	B	
	Performance Line	**Standard**	B	
For other motor protection and more information, see from page 5/35			■	
Terminal box position		Version		
Terminal box at top		**Standard**	4	
For other terminal box positions and more information, see from page 5/37			■	
Special versions				Order code(s)
For options, see from page 5/42			**1MB1■■3-. . . . ■-■■■■-Z**	. . .+. . .+. . .+. . .

For footnotes, see page 5/27

© Siemens AG 2018

Selection and ordering data (continued)

P_{rated}, 50 Hz	P_{rated}, 60 Hz	Frame size	Operating values at rated power: n_{rated}, 50 Hz	T_{rated}, 50 Hz	Different IE class 60 Hz/P60	η_{rated}, 50 Hz, 4/4	η_{rated}, 50 Hz, 3/4	η_{rated}, 50 Hz, 2/4	cos φ_{rated}, 50 Hz, 4/4	I_{rated}, 50 Hz, 400 V	T_{LR}/T_{rated}	I_{LR}/I_{rated}	T_B/T_{rated}	L_{pfA}, 50 Hz	L_{WA}, 50 Hz	Cast-iron series 1MB15.3 – *Basic Line* 1MB16.3 – *Performance Line* Article No.	$m_{IM B3}$	J
kW	kW	FS	rpm	Nm		%	%	%		A				dB(A)	dB(A)		kg	kgm^2
• Cooling: self-ventilated (IC 411) • Efficiency according to IEC 60034-30: IE3 Premium Efficiency • Insulation: Thermal class 155 (temperature class F), IP55 degree of protection, utilization in accordance with thermal class 130 (temperature class B)																		
6-pole: 1000 rpm at 50 Hz, 1200 rpm at 60 Hz [1]																		
0.18	**0.21**	**71 M**	885	1.9		63.9	64.6	60.8	0.69	0.59	2.3	2.8	2.3	39	50	**1MB1 5 ■3-0CC2■-■■■■**	12.5	0.001
0.25	**0.29**	**71 M**	900	2.7		68.6	69.5	66.2	0.69	0.76	2.6	3.2	2.6	46	57	**1MB1 5 ■3-0CC3■-■■■■**	15.5	0.0015
0.37	**0.43**	**80 M**	940	3.8		73.5	73.1	69.4	0.66	1.1	2.3	4.2	2.7	42	53	**1MB1 5 ■3-0DC2■-■■■■**	18.5	0.0025
0.55	**0.63**	**80 M**	935	5.6		77.2	77	73.9	0.67	1.53	2.5	4.5	2.8	42	53	**1MB1 5 ■3-0DC3■-■■■■**	22.5	0.0031
0.75	**0.88**	**90 S**	945	7.6		78.9	80	78.8	0.7	1.96	2.2	4.6	2.6	43	55	**1MB1 5 ■3-0EC0■-■■■■**	26.5	0.004
1.1	**1.27**	**90 L**	940	11	IE1	81	82	80.5	0.69	2.85	2.3	4.6	2.7	43	55	**1MB1 5 ■3-0EC4■-■■■■**	32	0.0048
1.5	**1.75**	**100 L**	970	14.8	IE2	82.5	83.1	81.5	0.73	3.6	1.9	5.2	2.8	59	71	**1MB1■■3-1AC4■-■■■■**	36	0.011
2.2	**2.55**	**112 M**	970	22	IE2	84.3	85	83.9	0.75	5	2.2	5.6	2.8	65	74	**1MB1■■3-1BC2■-■■■■**	53	0.017
3	**3.45**	**132 S**	980	29		85.6	86.3	85.7	0.76	6.7	2	6.3	3	63	75	**1MB1■■3-1CC0■-■■■■**	70	0.037
4	**4.55**	**132 M**	975	39		86.8	87.7	87.4	0.76	8.8	2	6.1	2.8	63	75	**1MB1■■3-1CC2■-■■■■**	70	0.037
5.5	**6.3**	**132 M**	975	54		88	88.9	88.5	0.76	11.9	2	6.3	2.9	63	75	**1MB1■■3-1CC3■-■■■■**	83	0.037
7.5	**8.6**	**160 M**	980	73		89.1	89.8	89.2	0.76	16	2	5.1	2.3	67	79	**1MB1■■3-1DC2■-■■■■**	122	0.098
11	**12.6**	**160 L**	975	108		90.3	91.1	90.7	0.77	23	2	5.1	2.4	67	79	**1MB1■■3-1DC4■-■■■■**	147	0.12
15	**18**	**180 L**	975	147	IE2	91.2	91.9	91.9	0.8	29.5	2.3	5.9	2.8	61	68	**1MB1■■3-1EC4■-■■■■**	180	0.19
18.5	**22**	**200 L**	978	181	IE2	91.7	92.5	92.5	0.79	37	2.5	5.6	2.6	64	71	**1MB1■■3-2AC4■-■■■■**	215	0.28
22	**26.5**	**200 L**	978	215	IE2	92.2	93.1	93.2	0.79	43.5	2.5	5.6	2.6	61	68	**1MB1■■3-2AC5■-■■■■**	230	0.32
30	**36**	**225 M**	982	292	IE2	92.9	93.6	93.5	0.83	56	2.6	6.6	3	64	77	**1MB1■■3-2BC2■-■■■■**	325	0.67
37	**44.5**	**250 M**	985	359	IE2	93.3	94	94	0.85	67	2.7	7	2.9	62	75	**1MB1■■3-2CC2■-■■■■**	405	1
45	**54**	**280 S**	988	435	IE2	93.7	94.3	94.2	0.85	82	3	6.8	2.8	60	74	**1MB1■■3-2DC0■-■■■■**	510	1.4
55	**66**	**280 M**	988	532	IE2	94.1	94.6	94.4	0.85	99	3.2	7.2	3	60	74	**1MB1■■3-2DC2■-■■■■**	560	1.6
75	**90**	**315 S**	990	723		94.6	94.9	94.4	0.84	136	2.6	7.5	3.1	63	78	**1MB1■■3-3AC0■-■■■■**	750	2.6
90	**108**	**315 M**	991	867	IE2	94.9	95.2	94.9	0.85	161	2.5	6.7	2.8	63	78	**1MB1■■3-3AC2■-■■■■**	890	3.1
110	**132**	**315 L**	991	1060	IE2	95.1	95.5	95.3	0.84	199	2.8	7.2	3	63	78	**1MB1■■3-3AC4■-■■■■**	990	3.9
132	**158**	**315 L**	991	1272	IE2	95.4	95.9	95.8	0.84	240	2.7	7.2	3	67	82	**1MB1■■3-3AC5■-■■■■**	1110	4.4
160	**192**	**315 L**	991	1542	IE2	95.6	95.8	95.4	0.83	290	3.3	7.7	3.5	67	82	**1MB1■■3-3AC6■-■■■■**	1160	4.6

			Article No. code	Order code
Basic Line			5	
Performance Line			6	
Zones				
Zone 21 (occasionally conductive and non-conductive dust) Ex tb IIIC			1	
Zone 22 (rarely conductive or temporarily non-conductive dust) Ex tc IIIB			2	
Zone 2 (rarely explosive or temporarily explosive gases) Ex ec IIC			3	
Voltages [3]		Version		Order code
50 Hz 230 VΔ/400 VY	60 Hz [1] 460 VY	**Standard**	2 2	–
50 Hz 400 VΔ/690 VY	60 Hz [1] 460 VΔ	**Standard**	3 4	–
50 Hz 500 VY		Without additional charge	2 7	–
50 Hz 500 VΔ		Without additional charge	4 0	–
For other voltages [1] and more information, see from page 5/29			9 0	. . .
Types of construction		Version		Order code
Without flange	IM B3 [2]	**Standard**	A	–
With flange	IM B5 [2]	With additional charge	F	–
With flange	IM B14 [2]	With additional charge	K	–
For other types of construction and more information, see from page 5/32			■	. . .
Motor protection	Line	Version		
Without	Only possible for **Basic Line**	**Standard**	A	
PTC thermistor with 3 temperature sensors	**Basic Line**	With additional charge	B	
	Performance Line	**Standard**	B	
For other motor protection and more information, see from page 5/35			■	
Terminal box position		Version		
Terminal box at top		**Standard**	4	
For other terminal box positions and more information, see from page 5/37			■	
Special versions				Order code(s)
For options, see from page 5/42			1MB1■■3- . . . . ■-■■■■-Z	. . .+. . .+. . .+. . .

For footnotes, see page 5/27

© Siemens AG 2018

Selection and ordering data

P_{rated}, 50 Hz	P_{rated}, 60 Hz	Frame size	Operating values at rated power: n_{rated}, 50 Hz	T_{rated}, 50 Hz	Different IE class 60 Hz/P60	η_{rated}, 50 Hz, 4/4	η_{rated}, 50 Hz, 3/4	η_{rated}, 50 Hz, 2/4	cos φ_{rated},5 0 Hz, 4/4	I_{rated}, 50 Hz, 400 V	T_{LR}/T_{rated}	I_{LR}/I_{rated}	T_B/T_{rated}	L_{pfA}, 50 Hz	L_{WA}, 50 Hz	Aluminum series 1MB1 Article No.	$m_{IM\ B3}$	J
kW	kW	FS	rpm	Nm		%	%	%		A				dB(A)	dB(A)		kg	kgm²
• Cooling: self-ventilated (IC 411) • Efficiency according to IEC 60034-30: IE2 High Efficiency • Insulation: Thermal class 155 (temperature class F), IP55 degree of protection, utilization in accordance with thermal class 130 (temperature class B)																		
2-pole: 3000 rpm at 50 Hz, 3600 rpm at 60 Hz [1]																		
0.75	0.86	80 M	2805	2.6		77.4	80	80.1	0.84	1.67	1.9	4.9	2.3	60	71	1MB10■1-0DA2■-■■■■	9	0.0008
1.1	1.27	80 M	2835	3.7		79.6	81.3	80.9	0.83	2.4	2.7	6	3.1	60	71	1MB10■1-0DA3■-■■■■	11	0.0011
1.5	1.75	90 S	2885	4.9		81.3	81.7	79.8	0.84	3.15	2.7	6.9	3.6	65	77	1MB10■1-0EA0■-■■■■	13	0.0017
2.2	2.55	90 L	2890	7.3		83.2	83.7	82	0.85	4.5	2.5	7.1	3.7	65	77	1MB10■1-0EA4■-■■■■	15	0.0021
3	3.45	100 L	2905	9.9		84.6	85.5	84.6	0.84	6.1	2.3	7	3.3	67	79	1MB10■1-1AA4■-■■■■	21	0.0044
4	4.55	112 M	2945	13		85.8	86.2	85.1	0.85	7.9	2.1	8	3.6	69	81	1MB10■1-1BA2■-■■■■	27	0.0092
5.5	6.3	132 S	2950	18		87	88	87.6	0.87	10.5	1.8	6.6	2.9	68	80	1MB10■1-1CA0■-■■■■	39	0.02
7.5	8.6	132 S	2950	24		88.1	88.5	87.6	0.87	14.1	2.2	7.5	3.1	68	80	1MB10■1-1CA1■-■■■■	43	0.024
11	12.6	160 M	2955	36		89.4	89.3	88	0.87	20.5	2.1	7.4	3.2	70	82	1MB10■1-1DA2■-■■■■	67	0.045
15	17.3	160 M	2955	48		90.3	90.7	90	0.88	27	2.4	7.6	3.4	70	82	1MB10■1-1DA3■-■■■■	75	0.053
18.5	21.3	160 L	2955	60		90.9	91.3	90.6	0.88	33.5	2.9	7.9	3.6	70	82	1MB10■1-1DA4■-■■■■	84	0.061
4-pole: 1500 rpm at 50 Hz, 1800 rpm at 60 Hz [1]																		
0.55	0.63	80 M	1440	3.6		77.1	76.8	73.7	0.74	1.39	2.2	5.3	3.1	53	64	1MB10■1-0DB2■-■■■■	10	0.0017
0.75	0.86	80 M	1440	5		79.6	79.9	77.5	0.76	1.79	2.2	5.6	3.1	53	64	1MB10■1-0DB3■-■■■■	11	0.0021
1.1	1.27	90 S	1425	7.4		81.4	81.8	80	0.78	2.5	2.3	5.6	2.9	56	68	1MB10■1-0EB0■-■■■■	13	0.0028
1.5	1.75	90 L	1435	10		82.8	83.5	82.2	0.79	3.3	2.6	6.4	3.4	56	68	1MB10■1-0EB4■-■■■■	16	0.0036
2.2	2.55	100 L	1455	14		84.3	85.1	84.2	0.81	4.65	2.1	6.9	3.3	60	72	1MB10■1-1AB4■-■■■■	21	0.0086
3	3.45	100 L	1455	20		85.5	86.4	85.6	0.82	6.2	2	6.9	3.1	60	72	1MB10■1-1AB5■-■■■■	25	0.011
4	4.55	112 M	1460	26		86.6	87.3	86.4	0.81	8.2	2.5	7.1	3.2	58	70	1MB10■1-1BB2■-■■■■	29	0.014
5.5	6.3	132 S	1465	36		87.7	88.4	87.6	0.8	11.3	2.3	6.9	2.9	64	76	1MB10■1-1CB0■-■■■■	42	0.027
7.5	8.6	132 M	1465	49		88.7	89.8	89.8	0.83	14.7	2.3	6.9	2.9	64	76	1MB10■1-1CB2■-■■■■	49	0.034
11	12.6	160 M	1470	71		89.8	91	90.9	0.85	21	2.1	6.7	2.8	65	77	1MB10■1-1DB2■-■■■■	71	0.065
15	17.3	160 L	1475	97		90.6	91.2	90.8	0.85	28	2.3	7.3	3	65	77	1MB10■1-1DB4■-■■■■	83	0.083

Zones																				
Zone 21 (occasionally conductive and non-conductive dust) Ex tb IIIC																1				
Zone 22 (rarely conductive or temporarily non-conductive dust) Ex tc IIIB																2				
Zone 2 (rarely explosive or temporarily explosive gases) Ex ec IIC																3				
Voltages															Version					Order code
50 Hz 230 VΔ/400 VY			60 Hz [1] 460 VY												**Standard**			2	2	–
50 Hz 400 VΔ/690 VY			60 Hz [1] 460 VΔ												**Standard**			3	4	–
50 Hz 500 VY															Without additional charge			2	7	–
50 Hz 500 VΔ															Without additional charge			4	0	–
For other voltages [1] and more information, see from page 5/28																		9	0	. . .
Types of construction															Version					Order code
Without flange			IM B3 [2]												**Standard**				A	–
With flange			IM B5 [2]												With additional charge				F	–
With flange			IM B14 [2]												With additional charge				K	–
For other types of construction and more information, see from page 5/30																			■	. . .
Motor protection															Version					
Without															**Standard**					A
PTC thermistor with 1 or 3 temperature sensors (frame sizes 80, 90 or 100 to 200)															With additional charge					B
For other motor protection and more information, see from page 5/34																				■
Terminal box position															Version					
Terminal box at top															**Standard**					4
For other terminal box positions and more information, see from page 5/36																				■
Special versions																				Order code(s)
For options, see from page 5/38																1MB10■1-		■	-■■■■	-Z . . .+. . .+. . .+. . .

For footnotes, see page 5/27

© Siemens AG 2018

Selection and ordering data (continued)

P_{rated}, 50 Hz	P_{rated}, 60 Hz	Frame size	Operating values at rated power: n_{rated}, 50 Hz	T_{rated}, 50 Hz	Different IE class 60 Hz/P60	η_{rated}, 50 Hz, 4/4	η_{rated}, 50 Hz, 3/4	η_{rated}, 50 Hz, 2/4	cos φ_{rated}, 50 Hz, 4/4	I_{rated}, 50 Hz, 400 V	T_{LR}/T_{rated}	I_{LR}/I_{rated}	T_B/T_{rated}	L_{pfA}, 50 Hz	L_{WA}, 50 Hz	Aluminum series 1MB1 Article No.	$m_{IM\ B3}$	J
kW	kW	FS	rpm	Nm		%	%	%		A				dB(A)	dB(A)		kg	kgm^2
• Cooling: self-ventilated (IC 411) • Efficiency according to IEC 60034-30: IE2 High Efficiency • Insulation: Thermal class 155 (temperature class F), IP55 degree of protection, utilization in accordance with thermal class 130 (temperature class B)																		
6-pole: 1000 rpm at 50 Hz, 1200 rpm at 60 Hz [1]																		
0.37	0.43	80 M	925	3.8		67.6	67.9	64.4	0.69	1.14	2.1	4	2.4	42	53	1MB10■1-0DC2■-■■■■	9	0.0017
0.55	0.63	80 M	935	5.6		73.1	73.8	70.8	0.66	1.65	2.5	4.4	2.9	42	53	1MB10■1-0DC3■-■■■■	12	0.0025
0.75	0.86	90 S	935	7.7		75.9	76.8	74.5	0.7	2.05	2	4.1	2.5	43	55	1MB10■1-0EC0■-■■■■	13	0.003
1.1	1.27	90 L	935	11	IE1	78.1	79.3	77.7	0.7	2.9	2.2	4.4	2.6	43	55	1MB10■1-0EC4■-■■■■	16	0.004
1.5	1.75	100 L	970	15		79.8	80.5	79	0.73	3.7	2	5.4	2.8	59	71	1MB10■1-1AC4■-■■■■	25	0.011
2.2	2.55	112 M	965	22		81.8	82.7	81.7	0.75	5.2	2	5	2.8	62	74	1MB10■1-1BC2■-■■■■	29	0.014
3	3.45	132 S	970	30		83.3	83.4	81	0.72	7.2	1.6	5	2.5	63	75	1MB10■1-1CC0■-■■■■	38	0.024
4	4.55	132 M	970	39		84.6	85.5	84.3	0.75	9.1	1.6	5	2.3	63	75	1MB10■1-1CC2■-■■■■	43	0.029
5.5	6.3	132 M	970	54		86	87.1	86.4	0.76	12.1	1.9	5.6	2.6	63	75	1MB10■1-1CC3■-■■■■	52	0.037
7.5	8.6	160 M	975	73		87.2	87.9	87.2	0.74	16.8	1.9	4.7	2.2	67	79	1MB10■1-1DC2■-■■■■	77	0.075
11	12.6	160 L	975	108		88.7	89.7	89.3	0.76	23.5	1.9	4.8	2.2	67	79	1MB10■1-1DC4■-■■■■	93	0.098
8-pole: 750 rpm at 50 Hz, 900 rpm at 60 Hz [1]																		
0.75	0.86	100 L	705	10		66.2	65.7	61.6	0.61	2.7	1.5	3.2	2.1	60	72	1MB10■1-1AD4■-■■■■	21	0.0086
1.1	1.27	100 L	695	15		70.8	72.3	69.6	0.65	3.45	1.4	3.2	1.9	60	72	1MB10■1-1AD5■-■■■■	25	0.011
1.5	1.75	112 M	725	20		74.1	73.9	71.2	0.63	4.65	1.6	4	2.4	63	75	1MB10■1-1BD2■-■■■■	34	0.017
2.2	2.55	132 S	725	29		77.6	78.2	76.6	0.62	6.6	1.4	3.5	2	63	75	1MB10■1-1CD0■-■■■■	46	0.034
3	3.45	132 M	720	40	IE1	80	80.7	79.2	0.62	8.7	1.4	3.7	2	63	75	1MB10■1-1CD2■-■■■■	52	0.037
4	4.55	160 M	730	52		81.9	82.6	81.4	0.67	10.5	1.6	3.7	1.9	63	75	1MB10■1-1DD2■-■■■■	69	0.065
5.5	6.3	160 M	730	72		83.8	84.2	83	0.67	14.1	1.7	3.9	2	63	75	1MB10■1-1DD3■-■■■■	82	0.083
7.5	8.6	160 L	725	99		85.3	86.4	86	0.7	18.1	1.6	3.8	1.9	63	75	1MB10■1-1DD4■-■■■■	94	0.098

Zones				
Zone 21 (occasionally conductive and non-conductive dust) Ex tb IIIC			1	
Zone 22 (rarely conductive or temporarily non-conductive dust) Ex tc IIIB			2	
Zone 2 (rarely explosive or temporarily explosive gases) Ex ec IIC			3	
Voltages		Version		Order code
50 Hz 230 VΔ/400 VY	60 Hz [1] 460 VY	**Standard**	2 2	–
50 Hz 400 VΔ/690 VY	60 Hz [1] 460 VΔ	**Standard**	3 4	–
50 Hz 500 VY		Without additional charge	2 7	–
50 Hz 500 VΔ		Without additional charge	4 0	–
For other voltages [1] and more information, see from page 5/28			9 0	. . .
Types of construction		Version		Order code
Without flange	IM B3 [2]	**Standard**	A	–
With flange	IM B5 [2]	With additional charge	F	–
With flange	IM B14 [2]	With additional charge	K	–
For other types of construction and more information, see from page 5/30			■	. . .
Motor protection		Version		
Without		**Standard**	A	
PTC thermistor with 1 or 3 temperature sensors (frame sizes 80, 90 or 100 to 200)		With additional charge	B	
For other motor protection and more information, see from page 5/34			■	
Terminal box position		Version		
Terminal box at top		**Standard**	4	
For other terminal box positions and more information, see from page 5/36			■	
Special versions				Order code(s)
For options, see from page 5/38			1MB10■1- . . . . ■-■■■■-Z	. . .+. . .+. . .+. . .

5

For footnotes, see page 5/27

© Siemens AG 2018

IE2

Selection and ordering data

P_{rated}, 50 Hz	P_{rated}, 60 Hz	Frame size	Operating values at rated power: n_{rated}, 50 Hz	T_{rated}, 50 Hz	Different IE class 60 Hz/P60	η_{rated}, 50 Hz, 4/4	η_{rated}, 50 Hz, 3/4	η_{rated}, 50 Hz, 2/4	cos φ_{rated}, 50 Hz, 4/4	I_{rated}, 50 Hz, 400 V	T_{LR}/T_{rated}	I_{LR}/I_{rated}	T_B/T_{rated}	L_{pfA}, 50 Hz	L_{WA}, 50 Hz	Cast-iron series 1MB15.1 – *Basic Line* 1MB16.1 – *Performance Line* Article No.	$m_{IM\ B3}$	J
kW	kW	FS	rpm	Nm		%	%	%		A				dB(A)	dB(A)		kg	kgm^2
• Cooling: self-ventilated (IC 411) • Efficiency according to IEC 60034-30: IE2 High Efficiency • Insulation: Thermal class 155 (temperature class F), IP55 degree of protection, utilization in accordance with thermal class 130 (temperature class B)																		
2-pole: 3000 rpm at 50 Hz, 3600 rpm at 60 Hz [1]																		
0.37	**0.43**	**71 M**	2770	1.3		69.5	70.5	67.9	0.81	0.95	2.5	4.1	2.5	58	63	**1MB1 5■1-0CA2■-■■■■**	11.5	0.00035
0.55	**0.63**	**71 M**	2780	1.9		74.1	75.2	72.9	0.8	1.34	2.6	4.6	2.6	58	63	**1MB1 5■1-0CA3■-■■■■**	13	0.00045
0.75	**0.86**	**80 M**	2805	2.6		77.4	80	80.1	0.84	1.67	1.9	4.9	2.3	60	71	**1MB1 5■1-0DA2■-■■■■**	16	0.0008
1.1	**1.27**	**80 M**	2835	3.7		79.6	81.3	80.9	0.83	2.4	2.7	6	3.1	60	71	**1MB1 5■1-0DA3■-■■■■**	18	0.0011
1.5	**1.75**	**90 S**	2885	4.9		81.3	81.7	79.8	0.84	3.15	2.7	6.9	3.6	65	77	**1MB1 5■1-0EA0■-■■■■**	23	0.0017
2.2	**2.55**	**90 L**	2890	7.3		83.2	83.7	82	0.85	4.5	2.5	7.1	3.7	65	77	**1MB1 5■1-0EA4■-■■■■**	25.5	0.0021
3	**3.45**	**100 L**	2905	9.9		84.6	85.5	84.6	0.84	6.1	2.3	7	3.3	67	79	**1MB1■■1-1AA4■-■■■■**	32	0.0044
4	**4.55**	**112 M**	2945	13		85.8	86.2	85.1	0.85	7.9	2.1	8	3.6	69	81	**1MB1■■1-1BA2■-■■■■**	39	0.0092
5.5	**6.3**	**132 S**	2950	18		87	88	87.6	0.87	10.5	1.8	6.6	2.9	68	80	**1MB1■■1-1CA0■-■■■■**	57	0.02
7.5	**8.6**	**132 S**	2950	24		88.1	88.5	87.6	0.87	14.1	2.2	7.5	3.1	68	80	**1MB1■■1-1CA1■-■■■■**	61	0.024
11	**12.6**	**160 M**	2955	36		89.4	89.3	88	0.87	20.5	2.1	7.4	3.2	70	82	**1MB1■■1-1DA2■-■■■■**	96	0.045
15	**17.3**	**160 M**	2955	48		90.3	90.7	90	0.88	27	2.4	7.6	3.4	70	82	**1MB1■■1-1DA3■-■■■■**	104	0.053
18.5	**21.3**	**160 L**	2955	60		90.9	91.3	90.6	0.88	33.5	2.9	7.9	3.6	70	82	**1MB1■■1-1DA4■-■■■■**	113	0.061
22	**24.5**	**180 M**	2940	71		91.3	91.6	90.9	0.87	40	2.7	7.4	3.6	77	84	**1MB1■■1-1EA2■-■■■■**	145	0.069
30	**33.5**	**200 L**	2960	97		92	92.1	91.5	0.87	54	2.5	6.9	3.3	78	85	**1MB1■■1-2AA4■-■■■■**	200	0.13
37	**41.5**	**200 L**	2960	119		92.5	92.7	92.1	0.88	66	2.7	7.4	3.5	78	85	**1MB1■■1-2AA5■-■■■■**	225	0.15
45	**51**	**225 M**	2965	145		92.9	93.1	92.5	0.88	79	2.7	7.8	3.7	76	89	**1MB1■■1-2BA2■-■■■■**	295	0.23
55	**62**	**250 M**	2970	177		93.2	93.3	92.4	0.88	97	2.3	6.8	3.1	76	89	**1MB1■■1-2CA2■-■■■■**	360	0.4
75	**84**	**280 S**	2978	240		93.8	93.6	92.4	0.86	134	2.5	7.2	3.2	76	89	**1MB1■■1-2DA0■-■■■■**	490	0.71
90	**101**	**280 M**	2975	289		94.1	94.2	93.5	0.88	157	2.5	7.1	3.1	76	89	**1MB1■■1-2DA2■-■■■■**	530	0.83
110	**123**	**315 S**	2982	352		94.3	94.2	93.3	0.9	187	2.4	7.3	3	77	91	**1MB1■■1-3AA0■-■■■■**	720	1.3
132	**148**	**315 M**	2982	423		94.6	94.7	94.1	0.91	220	2.4	7.2	3.1	77	91	**1MB1■■1-3AA2■-■■■■**	880	1.6
160	**180**	**315 L**	2982	512		94.8	94.9	94.3	0.92	265	2.3	7	3.1	80	95	**1MB1■■1-3AA4■-■■■■**	930	1.8
200	**224**	**315 L**	2982	640		95	95.2	94.8	0.92	330	2.5	7.3	3	80	95	**1MB1■■1-3AA5■-■■■■**	1130	2.2

				Code	Order code
Basic Line				5	
Performance Line				6	
Zones					
Zone 21 (occasionally conductive and non-conductive dust) Ex tb IIIC				1	
Zone 22 (rarely conductive or temporarily non-conductive dust) Ex tc IIIB				2	
Zone 2 (rarely explosive or temporarily explosive gases) Ex ec IIC				3	
Voltages [3]			Version		Order code
50 Hz 230 VΔ/400 VY	60 Hz [1] 460 VY		**Standard**	2 2	–
50 Hz 400 VΔ/690 VY	60 Hz [1] 460 VΔ		**Standard**	3 4	–
50 Hz 500 VY			Without additional charge	2 7	–
50 Hz 500 VΔ			Without additional charge	4 0	–
For other voltages [1] and more information, see from page 5/29				9 0	. . .
Types of construction			Version		Order code
Without flange	IM B3 [2]		**Standard**	A	–
With flange	IM B5 [2]		With additional charge	F	–
With flange	IM B14 [2]		With additional charge	K	–
For other types of construction and more information, see from page 5/32				■	. . .
Motor protection		Line	Version		
Without		Only possible for **Basic Line**	**Standard**	A	
PTC thermistor with 3 temperature sensors		**Basic Line**	With additional charge	B	
		Performance Line	**Standard**	B	
For other motor protection and more information, see from page 5/35				■	
Terminal box position			Version		
Terminal box at top			**Standard**	4	
For other terminal box positions and more information, see from page 5/37				■	
Special versions					Order code(s)
For options, see from page 5/42				1MB1■■1- . . . . ■-■■■■-Z	. . .+. . .+. . .+. . .

For footnotes, see page 5/27

© Siemens AG 2018

Selection and ordering data (continued)

P_{rated}, 50 Hz	P_{rated}, 60 Hz	Frame size	Operating values at rated power: n_{rated}, 50 Hz	T_{rated}, 50 Hz	Different IE class 60 Hz/P60	η_{rated}, 50 Hz, 4/4	η_{rated}, 50 Hz, 3/4	η_{rated}, 50 Hz, 2/4	cos φ_{rated}, 50 Hz, 4/4	I_{rated}, 50 Hz, 400 V	T_{LR}/T_{rated}	I_{LR}/I_{rated}	T_B/T_{rated}	L_{pfA}, 50 Hz	L_{WA}, 50 Hz	Cast-iron series 1MB15.1 – *Basic Line*, 1MB16.1 – *Performance Line* Article No.	$m_{IM B3}$	J
kW	kW	FS	rpm	Nm		%	%	%		A				dB(A)	dB(A)		kg	kgm²
• Cooling: self-ventilated (IC 411) • Efficiency according to IEC 60034-30: IE2 High Efficiency • Insulation: Thermal class 155 (temperature class F), IP55 degree of protection, utilization in accordance with thermal class 130 (temperature class B)																		
4-pole: 1500 rpm at 50 Hz, 1800 rpm at 60 Hz [1]																		
0.25	**0.29**	**71 M**	1395	1.7		68.5	68.4	64.2	0.69	0.76	2.4	3.7	2.5	50	61	**1MB1 5■1-0CB2■-■■■■**	12	0.00076
0.37	**0.43**	**71 M**	1380	2.6		72.7	73.2	69.9	0.72	1.02	2.3	3.8	2.4	50	61	**1MB1 5■1-0CB3■-■■■■**	13	0.00095
0.55	**0.63**	**80 M**	1440	3.6		77.1	76.8	73.7	0.74	1.39	2.2	5.3	3.1	53	64	**1MB1 5■1-0DB2■-■■■■**	17	0.0017
0.75	**0.86**	**80 M**	1440	5		79.6	79.9	77.5	0.76	1.79	2.2	5.6	3.1	53	64	**1MB1 5■1-0DB3■-■■■■**	18.5	0.0021
1.1	**1.27**	**90 S**	1425	7.4		81.4	81.8	80	0.78	2.5	2.3	5.6	2.9	56	68	**1MB1 5■1-0EB0■-■■■■**	23	0.0028
1.5	**1.75**	**90 L**	1435	10		82.8	83.5	82.2	0.79	3.3	2.6	6.4	3.4	56	68	**1MB1 5■1-0EB4■-■■■■**	25	0.0036
2.2	**2.55**	**100 L**	1455	14		84.3	85.1	84.2	0.81	4.65	2.1	6.9	3.3	60	72	**1MB1■■1-1AB4■-■■■■**	32	0.0086
3	**3.45**	**100 L**	1455	20		85.5	86.4	85.6	0.82	6.2	2	6.9	3.1	60	72	**1MB1■■1-1AB5■-■■■■**	37	0.011
4	**4.55**	**112 M**	1460	26		86.6	87.3	86.4	0.81	8.2	2.5	7.1	3.2	58	70	**1MB1■■1-1BB2■-■■■■**	46	0.014
5.5	**6.3**	**132 S**	1465	36		87.7	88.4	87.6	0.8	11.3	2.3	6.9	2.9	64	76	**1MB1■■1-1CB0■-■■■■**	61	0.027
7.5	**8.6**	**132 M**	1465	49		88.7	89.8	89.8	0.83	14.7	2.3	6.9	2.9	64	76	**1MB1■■1-1CB2■-■■■■**	75	0.034
11	**12.6**	**160 M**	1470	71		89.8	91	90.9	0.85	21	2.1	6.7	2.8	65	77	**1MB1■■1-1DB2■-■■■■**	96	0.065
15	**17.3**	**160 L**	1475	97		90.6	91.2	90.8	0.85	28	2.3	7.3	3	65	77	**1MB1■■1-1DB4■-■■■■**	104	0.083
18.5	**21.3**	**180 M**	1465	121		91.2	92	91.9	0.84	35	2.5	7.2	3.4	61	74	**1MB1■■1-1EB2■-■■■■**	160	0.12
22	**25.3**	**180 L**	1465	143		91.6	92.2	91.9	0.84	41.5	2.6	7.3	3.5	69	76	**1MB1■■1-1EB4■-■■■■**	170	0.13
30	**34.5**	**200 L**	1470	195		92.3	92.8	92.5	0.84	56	2.5	6.7	3.7	70	77	**1MB1■■1-2AB5■-■■■■**	230	0.2
37	**42.5**	**225 S**	1470	240		92.7	93.5	93.5	0.88	65	2.3	6.6	2.9	66	79	**1MB1■■1-2BB0■-■■■■**	280	0.42
45	**52**	**225 M**	1475	291		93.1	93.8	93.7	0.87	80	2.5	6.9	3.1	66	79	**1MB1■■1-2BB2■-■■■■**	305	0.46
55	**63**	**250 M**	1480	355		93.5	93.9	93.5	0.85	100	2.7	6.8	3	66	79	**1MB1■■1-2CB2■-■■■■**	385	0.75
75	**86**	**280 S**	1485	482		94	94.2	93.8	0.87	132	2.5	6.8	3	71	85	**1MB1■■1-2DB0■-■■■■**	550	1.3
90	**104**	**280 M**	1486	578		94.2	94.3	93.6	0.87	159	2.6	7.3	3.1	71	85	**1MB1■■1-2DB2■-■■■■**	570	1.4
110	**127**	**315 S**	1490	705		94.5	94.6	94	0.86	195	2.7	7.4	3	72	86	**1MB1■■1-3AB0■-■■■■**	740	2
132	**152**	**315 M**	1490	846		94.7	94.9	94.6	0.87	230	2.7	7.1	2.9	75	89	**1MB1■■1-3AB2■-■■■■**	870	2.3
160	**184**	**315 L**	1490	1025		94.9	95	94.5	0.87	280	2.8	7.2	3.1	76	91	**1MB1■■1-3AB4■-■■■■**	940	2.8
200	**230**	**315 L**	1490	1282		95.1	95.3	94.7	0.87	350	3.1	7.5	3.2	77	92	**1MB1■■1-3AB5■-■■■■**	1140	3.5

			Article No. position	Order code
Basic Line			5	
Performance Line			6	
Zones				
Zone 21 (occasionally conductive and non-conductive dust) Ex tb IIIC			1	
Zone 22 (rarely conductive or temporarily non-conductive dust) Ex tc IIIB			2	
Zone 2 (rarely explosive or temporarily explosive gases) Ex ec IIC			3	
Voltages [3]		Version		Order code
50 Hz 230 VΔ/400 VY	60 Hz [1] 460 VY	**Standard**	2 2	–
50 Hz 400 VΔ/690 VY	60 Hz [1] 460 VΔ	**Standard**	3 4	–
50 Hz 500 VY		Without additional charge	2 7	–
50 Hz 500 VΔ		Without additional charge	4 0	–
For other voltages [1] and more information, see from page 5/29			9 0	. . .
Types of construction		Version		Order code
Without flange	IM B3 [2]	**Standard**	A	–
With flange	IM B5 [2]	With additional charge	F	–
With flange	IM B14 [2]	With additional charge	K	–
For other types of construction and more information, see from page 5/32			■	. . .
Motor protection	Line	Version		
Without	Only possible for **Basic Line**	**Standard**	A	
PTC thermistor with 3 temperature sensors	**Basic Line**	With additional charge	B	
	Performance Line	**Standard**	B	
For other motor protection and more information, see from page 5/35			■	
Terminal box position		Version		
Terminal box at top		**Standard**	4	
For other terminal box positions and more information, see from page 5/37			■	
Special versions				Order code(s)
For options, see from page 5/42			**1MB1■■1- . . . . ■-■■■■-Z**	. . .+. . .+. . .+. . .

For footnotes, see page 5/27

© Siemens AG 2018

Selection and ordering data (continued)

P_{rated}, 50 Hz	P_{rated}, 60 Hz	Frame size	Operating values at rated power: n_{rated}, 50 Hz	T_{rated}, 50 Hz	Different IE class 60 Hz/P60	η_{rated}, 50 Hz, 4/4	η_{rated}, 50 Hz, 3/4	η_{rated}, 50 Hz, 2/4	cos φ_{rated}, 50 Hz, 4/4	I_{rated}, 50 Hz, 400 V	T_{LR}/T_{rated}	I_{LR}/I_{rated}	T_B/T_{rated}	L_{pfA}, 50 Hz	L_{WA}, 50 Hz	Cast-iron series 1MB15.1 – *Basic Line*, 1MB16.1 – *Performance Line* Article No.	$m_{IM B3}$	J
kW	kW	FS	rpm	Nm		%	%	%		A				dB(A)	dB(A)		kg	kgm²
• Cooling: self-ventilated (IC 411) • Efficiency according to IEC 60034-30: IE2 High Efficiency • Insulation: Thermal class 155 (temperature class F), IP55 degree of protection, utilization in accordance with thermal class 130 (temperature class B)																		
6-pole: 1000 rpm at 50 Hz, 1200 rpm at 60 Hz [1]																		
0.18	**0.21**	**71 M**	875	2		56.6	56.9	52.7	0.68	0.68	2.2	2.5	2.3	46	57	**1MB1 5■1-0CC2■-■■■■**	11.5	0.0008
0.25	**0.29**	**71 M**	870	2.7		61.6	62.7	59.2	0.7	0.84	2.3	2.6	2.3	46	57	**1MB1 5■1-0CC3■-■■■■**	12.5	0.0010
0.37	**0.43**	**80 M**	925	3.8		67.6	67.9	64.4	0.69	1.14	2.1	4	2.4	42	53	**1MB1 5■1-0DC2■-■■■■**	16.5	0.0017
0.55	**0.63**	**80 M**	935	5.6		73.1	73.8	70.8	0.66	1.65	2.5	4.4	2.9	42	53	**1MB1 5■1-0DC3■-■■■■**	18.5	0.0025
0.75	**0.86**	**90 S**	935	7.7		75.9	76.8	74.5	0.7	2.05	2	4.1	2.5	43	55	**1MB1 5■1-0EC0■-■■■■**	23	0.003
1.1	**1.27**	**90 L**	935	11	IE1	78.1	79.3	77.7	0.7	2.9	2.2	4.4	2.6	43	55	**1MB1 5■1-0EC4■-■■■■**	26.5	0.004
1.5	**1.75**	**100 L**	970	15		79.8	80.5	79	0.73	3.7	2	5.4	2.8	59	71	**1MB1■■1-1AC4■-■■■■**	36	0.011
2.2	**2.55**	**112 M**	965	22		81.8	82.7	81.7	0.75	5.2	2	5	2.8	62	74	**1MB1■■1-1BC2■-■■■■**	41	0.014
3	**3.45**	**132 S**	970	30		83.3	83.4	81	0.72	7.2	1.6	5	2.5	63	75	**1MB1■■1-1CC0■-■■■■**	56	0.024
4	**4.55**	**132 M**	970	39		84.6	85.5	84.3	0.75	9.1	1.6	5	2.3	63	75	**1MB1■■1-1CC2■-■■■■**	61	0.029
5.5	**6.3**	**132 M**	970	54		86	87.1	86.4	0.76	12.1	1.9	5.6	2.6	63	75	**1MB1■■1-1CC3■-■■■■**	70	0.037
7.5	**8.6**	**160 M**	975	73		87.2	87.9	87.2	0.74	16.8	1.9	4.7	2.2	67	79	**1MB1■■1-1DC2■-■■■■**	106	0.075
11	**12.6**	**160 L**	975	108		88.7	89.7	89.3	0.76	23.5	1.9	4.8	2.2	67	79	**1MB1■■1-1DC4■-■■■■**	122	0.098
15	**18**	**180 L**	975	147		89.7	90.1	89.5	0.78	31	2.5	6	3.1	57	70	**1MB1■■1-1EC4■-■■■■**	155	0.17
18.5	**22**	**200 L**	978	181	IE1	90.4	91.3	91.2	0.82	36	2.4	5.8	2.6	63	76	**1MB1■■1-2AC4■-■■■■**	200	0.25
22	**26.5**	**200 L**	978	215	IE1	90.9	91.7	91.4	0.82	42.5	2.5	6.2	2.6	63	76	**1MB1■■1-2AC5■-■■■■**	220	0.3
30	**36**	**225 M**	980	292	IE1	91.7	92.5	92.3	0.83	57	2.5	5.6	2.7	65	78	**1MB1■■1-2BC2■-■■■■**	300	0.58
37	**44.5**	**250 M**	982	360	IE1	92.2	93.1	93.1	0.83	70	2.8	6	2.5	62	77	**1MB1■■1-2CC2■-■■■■**	370	0.86
45	**54**	**280 S**	985	436	IE1	92.7	93.4	93.2	0.84	83	2.7	6.3	2.6	65	79	**1MB1■■1-2DC0■-■■■■**	460	1.1
55	**66**	**280 M**	985	533	IE1	93.1	93.9	94	0.86	99	2.5	6.4	2.6	65	79	**1MB1■■1-2DC2■-■■■■**	510	1.4
75	**90**	**315 S**	988	725	IE1	93.7	94	93.6	0.84	138	2.5	6.7	2.8	65	79	**1MB1■■1-3AC0■-■■■■**	660	2.1
90	**108**	**315 M**	988	870	IE1	94	94.3	93.6	0.84	165	2.6	6.9	2.8	65	79	**1MB1■■1-3AC2■-■■■■**	730	2.5
110	**132**	**315 L**	988	1063	IE1	94.3	94.6	94.5	0.86	196	2.7	7	2.8	68	82	**1MB1■■1-3AC4■-■■■■**	940	3.6
132	**158**	**315 L**	988	1276		94.6	94.9	94.7	0.86	235	3	7.5	2.9	69	84	**1MB1■■1-3AC5■-■■■■**	990	4.0
160	**192**	**315 L**	988	1546		94.8	94.7	94.4	0.86	285	3.1	7.7	3.3	69	84	**1MB1■■1-3AC6■-■■■■**	1160	4.7

Basic Line				5	
Performance Line				6	
Zones					
Zone 21 (occasionally conductive and non-conductive dust) Ex tb IIIC				1	
Zone 22 (rarely conductive or temporarily non-conductive dust) Ex tc IIIB				2	
Zone 2 (rarely explosive or temporarily explosive gases) Ex ec IIC				3	
Voltages [3]			Version		Order code
50 Hz 230 VΔ/400 VY	60 Hz [1] 460 VY		**Standard**	2 2	–
50 Hz 400 VΔ/690 VY	60 Hz [1] 460 VΔ		**Standard**	3 4	–
50 Hz 500 VY			Without additional charge	2 7	–
50 Hz 500 VΔ			Without additional charge	4 0	–
For other voltages [1] and more information, see from page 5/29				9 0	. . .
Types of construction			Version		Order code
Without flange	IM B3 [2]		**Standard**	A	–
With flange	IM B5 [2]		With additional charge	F	–
With flange	IM B14 [2]		With additional charge	K	–
For other types of construction and more information, see from page 5/32				■	. . .
Motor protection		Line	Version		
Without		Only possible for **Basic Line**	**Standard**	A	
PTC thermistor with 3 temperature sensors		**Basic Line**	With additional charge	B	
		Performance Line	**Standard**	B	
For other motor protection and more information, see from page 5/35				■	
Terminal box position			Version		
Terminal box at top			**Standard**	4	
For other terminal box positions and more information, see from page 5/37				■	
Special versions					Order code(s)
For options, see from page 5/42				**1MB1■■1-. . . . ■-■■■■-Z**	. . .+. . .+. . .+. . .

For footnotes, see page 5/27

© Siemens AG 2018

Selection and ordering data (continued)

P_{rated}, 50 Hz	P_{rated}, 60 Hz	Frame size	Operating values at rated power: n_{rated}, 50 Hz	T_{rated}, 50 Hz	Different IE class 60 Hz/P60	η_{rated}, 50 Hz, 4/4	η_{rated}, 50 Hz, 3/4	η_{rated}, 50 Hz, 2/4	cos φ_{rated}, 50 Hz, 4/4	I_{rated}, 50 Hz, 400 V	T_{LR}/T_{rated}	I_{LR}/I_{rated}	T_B/T_{rated}	L_{pfA}, 50 Hz	L_{WA}, 50 Hz	Cast-iron series **1MB15.1** – *Basic Line* **1MB16.1** – *Performance Line* Article No.	$m_{IM\ B3}$	J
kW	kW	FS	rpm	Nm		%	%	%		A				dB(A)	dB(A)		kg	kgm^2
• **Cooling: self-ventilated (IC 411)** • **Efficiency according to IEC 60034-30: IE2 High Efficiency** • **Insulation: Thermal class 155 (temperature class F), IP55 degree of protection, utilization in accordance with thermal class 130 (temperature class B)**																		
8-pole: 750 rpm at 50 Hz, 900 rpm at 60 Hz [1]																		
0.09	**0.11**	**71 M**	630	1.4	[4]	40.1	40.6	35.8	0.67	0.50	1.7	1.6	1.7	59	63	**1MB1 5 ■1-0CD2■-■■■■**	11.5	0.00077
0.12	**0.14**	**71 M**	640	1.8		40.1	39.6	34.7	0.66	0.65	1.8	1.8	1.8	48	59	**1MB1 5 ■1-0CD3■-■■■■**	12.5	0.00100
0.18	**0.21**	**80 M**	690	2.5		45.9	43.6	37.8	0.60	0.93	1.7	2.2	2.1	51	62	**1MB1 5 ■1-0DD2■-■■■■**	16.5	0.00175
0.25	**0.29**	**80 M**	705	3.4		50.6	48.1	41.9	0.55	1.30	2.0	2.5	2.5	51	62	**1MB1 5 ■1-0DD3■-■■■■**	18.5	0.00246
0.37	**0.43**	**90 S**	675	5.2		56.1	55.6	49.6	0.71	1.34	1.4	2.6	1.7	53	65	**1MB1 5 ■1-0ED0■-■■■■**	20	0.00225
0.55	**0.63**	**90 L**	665	7.9		61.7	63.4	59.8	0.74	1.74	1.5	2.7	1.7	53	65	**1MB1 5 ■1-0ED4■-■■■■**	21.5	0.00305
0.75	**0.86**	**100 L**	705	10		66.2	65.7	61.6	0.61	2.7	1.5	3.2	2.1	60	72	**1MB1■■1-1AD4■-■■■■**	32	0.0086
1.1	**1.27**	**100 L**	695	15		70.8	72.3	69.6	0.65	3.45	1.4	3.2	1.9	60	72	**1MB1■■1-1AD5■-■■■■**	36	0.011
1.5	**1.75**	**112 M**	725	20		74.1	73.9	71.2	0.63	4.65	1.6	4	2.4	63	72	**1MB1■■1-1BD2■-■■■■**	53	0.017
2.2	**2.55**	**132 S**	725	29		77.6	78.2	76.6	0.62	6.6	1.4	3.5	2	63	75	**1MB1■■1-1CD0■-■■■■**	64	0.034
3	**3.45**	**132 M**	720	40	IE1	80	80.7	79.2	0.62	8.7	1.4	3.7	2	63	75	**1MB1■■1-1CD2■-■■■■**	67	0.037
4	**4.55**	**160 M**	730	52		81.9	82.6	81.4	0.67	10.5	1.6	3.7	1.9	63	75	**1MB1■■1-1DD2■-■■■■**	98	0.065
5.5	**6.3**	**160 M**	730	72		83.8	84.2	83	0.67	14.1	1.7	3.9	2	63	75	**1MB1■■1-1DD3■-■■■■**	111	0.083
7.5	**8.6**	**160 L**	725	99		85.3	86.4	86	0.7	18.1	1.6	3.8	1.9	63	75	**1MB1■■1-1DD4■-■■■■**	123	0.098
11	**13.2**	**180 L**	720	146	IE1	86.9	88	87.6	0.7	26	2.3	4.9	2.6	72	75	**1MB1■■1-1ED4■-■■■■**	155	0.195
15	**18**	**200 L**	718	199		88	89.5	89.9	0.76	32.5	2.4	5.4	2.8	58	80	**1MB1■■1-2AD5■-■■■■**	220	0.344
18.5	**22**	**225 S**	730	242	IE1	89	89.9	89.5	0.78	38.5	2.2	5.4	2.7	59	72	**1MB1■■1-2BD0■-■■■■**	250	0.43
22	**26.5**	**225 M**	730	288		90.3	91.3	91.1	0.8	44	2.3	5.5	2.7	58	71	**1MB1■■1-2BD2■-■■■■**	270	0.5
30	**36**	**250 M**	732	391		91.3	92.2	92	0.8	59	2.4	5.6	2.7	60	73	**1MB1■■1-2CD2■-■■■■**	370	0.86
37	**44.5**	**280 S**	736	480		91.9	92.5	92.1	0.78	75	2.3	5.4	2.4	63	77	**1MB1■■1-2DD0■-■■■■**	460	1.1
45	**54**	**280 M**	738	582		92.4	92.8	92.4	0.79	89	2.5	5.7	2.5	66	80	**1MB1■■1-2DD2■-■■■■**	510	1.4
55	**66**	**315 S**	740	710		92.9	93.3	92.9	0.8	107	2.2	5.8	2.6	69	83	**1MB1■■1-3AD0■-■■■■**	640	2
75	**90**	**315 M**	738	970		93.5	94.4	94.5	0.81	143	2.3	5.9	2.7	69	84	**1MB1■■1-3AD2■-■■■■**	720	2.5
90	**108**	**315 L**	740	1161		93.5	94.3	94.4	0.83	167	2.2	5.8	2.5	69	84	**1MB1■■1-3AD4■-■■■■**	860	3.1
110	**132**	**315 L**	740	1419		94.2	95	95.1	0.82	205	2.7	6.7	2.9	74	88	**1MB1■■1-3AD5■-■■■■**	980	3.9
132	**158**	**315 L**	740	1703		94.4	94.8	94.4	0.81	250	2.9	7.2	3.3	76	90	**1MB1■■1-3AD6■-■■■■**	1070	4.5

Basic Line																5		
Performance Line																6		
Zones																		
Zone 21 (occasionally conductive and non-conductive dust) Ex tb IIIC																1		
Zone 22 (rarely conductive or temporarily non-conductive dust) Ex tc IIIB																2		
Zone 2 (rarely explosive or temporarily explosive gases) Ex ec IIC																3		
Voltages [3]														Version				Order code
50 Hz 230 VΔ/400 VY		60 Hz [1] 460 VY												**Standard**		2	2	–
50 Hz 400 VΔ/690 VY		60 Hz [1] 460 VΔ												**Standard**		3	4	–
50 Hz 500 VY														Without additional charge		2	7	–
50 Hz 500 VΔ														Without additional charge		4	0	–
For other voltages [1] and more information, see from page 5/29																9	0	. . .
Types of construction														Version				Order code
Without flange		IM B3 [2]												**Standard**			A	–
With flange		IM B5 [2]												With additional charge			F	–
With flange		IM B14 [2]												With additional charge			K	–
For other types of construction and more information, see from page 5/32																	■	. . .
Motor protection				Line										Version				
Without				Only possible for **Basic Line**										**Standard**			A	
PTC thermistor with 3 temperature sensors				**Basic Line**										With additional charge			B	
				Performance Line										**Standard**			B	
For other motor protection and more information, see from page 5/35																	■	
Terminal box position														Version				
Terminal box at top														**Standard**				4
For other terminal box positions and more information, see from page 5/37																		■
Special versions																		Order code(s)
For options, see from page 5/42																**1MB1■■1- . . . . ■-■■■■-Z**		. . .+. . .+. . .+. . .

5

For footnotes, see page 5/27

© Siemens AG 2018

Selection and ordering data

P_{rated}, 50 Hz	P_{rated}, 60 Hz	Frame size	Operating values at rated power: n_{rated}, 50 Hz	T_{rated}, 50 Hz	η_{rated}, 50 Hz, 4/4	η_{rated}, 50 Hz, 3/4	η_{rated}, 50 Hz, 2/4	cos φ_{rated}, 50 Hz, 4/4	I_{rated}, 50 Hz, 400 V	T_{LR}/T_{rated}	I_{LR}/I_{rated}	T_B/T_{rated}	L_{pfA}, 50 Hz	L_{WA}, 50 Hz	Aluminum series 1MB1 Article No.	$m_{IM B3}$	J
kW	kW	FS	rpm	Nm	%	%	%		A				dB(A)	dB(A)		kg	kgm²
• Cooling: self-ventilated (IC 411) • Efficiency according to IEC 60034-30: IE1 Standard Efficiency • Insulation: Thermal class 155 (temperature class F), IP55 degree of protection, utilization in accordance with thermal class 130 (temperature class B)																	
2-pole: 3000 rpm at 50 Hz, 3600 rpm at 60 Hz 1)																	
3	**3.45**	**100 L**	2835	10	81.5	83.2	82.8	0.87	6.1	3.2	6.4	3.5	67	79	**1MB10■2-1AA4■-■■■■**	20	0.0034
4	**4.55**	**112 M**	2935	13	83.1	83	80.8	0.85	8.2	3.3	8.3	4.2	69	81	**1MB10■2-1BA2■-■■■■**	25	0.0067
5.5	**6.3**	**132 S**	2910	18	84.7	85.9	85.7	0.88	10.7	1.8	5.7	2.6	68	80	**1MB10■2-1CA0■-■■■■**	35	0.013
7.5	**8.6**	**132 S**	2925	24	86	86.7	86.1	0.88	14.3	2.2	6.8	3.1	68	80	**1MB10■2-1CA1■-■■■■**	40	0.016
11	**12.6**	**160 M**	2925	36	87.6	88	87.1	0.86	21	2	5.7	2.7	70	82	**1MB10■2-1DA2■-■■■■**	60	0.03
15	**17.3**	**160 M**	2935	49	88.7	88.9	87.7	0.85	28.5	2.4	6.8	3.2	70	82	**1MB10■2-1DA3■-■■■■**	68	0.036
18.5	**21.3**	**160 L**	2935	60	89.3	89.7	89.3	0.87	34.5	2.7	7.6	3.4	70	82	**1MB10■2-1DA4■-■■■■**	78	0.044
4-pole: 1500 rpm at 50 Hz, 1800 rpm at 60 Hz 1)																	
2.2	**2.55**	**100 L**	1425	15	79.7	80.3	78.1	0.81	4.9	2.3	5.1	2.7	60	72	**1MB10■2-1AB4■-■■■■**	18	0.0059
3	**3.45**	**100 L**	1425	20	81.5	82.6	81.5	0.85	6.3	2.4	5.4	2.6	60	72	**1MB10■2-1AB5■-■■■■**	22	0.0078
4	**4.55**	**112 M**	1435	27	83.1	84.3	83.7	0.83	8.4	2.5	6.1	2.9	58	70	**1MB10■2-1BB2■-■■■■**	27	0.010
5.5	**6.3**	**132 S**	1450	36	84.7	85.3	84.2	0.82	11.4	2.3	5.7	2.7	64	76	**1MB10■2-1CB0■-■■■■**	38	0.019
7.5	**8.6**	**132 M**	1450	49	86	86.5	85.4	0.82	15.4	2.6	6.6	3.1	64	76	**1MB10■2-1CB2■-■■■■**	44	0.024
11	**12.6**	**160 M**	1460	72	87.6	87.9	86.7	0.81	22.5	2.7	6.9	3.3	65	77	**1MB10■2-1DB2■-■■■■**	62	0.044
15	**17.3**	**160 L**	1460	98	88.7	89.1	88	0.82	30	3	7.5	3.6	65	77	**1MB10■2-1DB4■-■■■■**	73	0.056

		Version	Article No. code	Order code
Zones				
Zone 21 (occasionally conductive and non-conductive dust) Ex tb IIIC			1	
Zone 22 (rarely conductive or temporarily non-conductive dust) Ex tc IIIB			2	
Zone 2 (rarely explosive or temporarily explosive gases) Ex ec IIC			3	
Voltages		Version		Order code
50 Hz 230 VΔ/400 VY	60 Hz 1) 460 VY	**Standard**	2 2	–
50 Hz 400 VΔ/690 VY	60 Hz 1) 460 VΔ	**Standard**	3 4	–
50 Hz 500 VY		Without additional charge	2 7	–
50 Hz 500 VΔ		Without additional charge	4 0	–
For other voltages 1) and more information, see from page 5/28			9 0	. . .
Types of construction		Version		Order code
Without flange	IM B3 2)	**Standard**	A	–
With flange	IM B5 2)	With additional charge	F	–
With flange	IM B14 2)	With additional charge	K	–
For other types of construction and more information, see from page 5/30			■	. . .
Motor protection		Version		
Without		**Standard**	A	
PTC thermistor with 3 temperature sensors		With additional charge	B	
For other motor protection and more information, see from page 5/34			■	
Terminal box position		Version		
Terminal box at top		**Standard**	4	
For other terminal box positions and more information, see from page 5/36			■	
Special versions				Order code(s)
For options, see from page 5/38			**1MB10■2- . . . . ■-■■■■**-Z	. . .+. . .+. . .+. . .

For footnotes, see page 5/27

© Siemens AG 2018

Selection and ordering data (continued)

P_{rated}, 50 Hz	P_{rated}, 60 Hz	Frame size	Operating values at rated power: n_{rated}, 50 Hz	T_{rated}, 50 Hz	η_{rated}, 50 Hz, 4/4	η_{rated}, 50 Hz, 3/4	η_{rated}, 50 Hz, 2/4	cos φ_{rated}, 50 Hz, 4/4	I_{rated}, 50 Hz, 400 V	T_{LR}/T_{rated}	I_{LR}/I_{rated}	T_B/T_{rated}	L_{pfA}, 50 Hz	L_{WA}, 50 Hz	Aluminum series 1MB1 Article No.	$m_{IM\ B3}$	J
kW	kW	FS	rpm	Nm	%	%	%		A				dB(A)	dB(A)		kg	kgm²
• Cooling: self-ventilated (IC 411) • Efficiency according to IEC 60034-30: IE1 Standard Efficiency • Insulation: Thermal class 155 (temperature class F), IP55 degree of protection, utilization in accordance with thermal class 130 (temperature class B)																	
6-pole: 1000 rpm at 50 Hz, 1200 rpm at 60 Hz [1]																	
1.5	1.75	100 L	940	15	75.2	75.6	72.3	0.74	3.9	2	4	2.2	59	71	1MB10■2-1AC4■-■■■■	19	0.0065
2.2	2.55	112 M	940	22	77.7	78.5	76.3	0.72	5.7	2.6	4.6	2.7	57	69	1MB10■2-1BC2■-■■■■	25	0.0092
3	3.45	132 S	955	30	79.7	79.9	77.1	0.74	7.3	2	4.6	2.6	63	75	1MB10■2-1CC0■-■■■■	34	0.017
4	4.55	132 M	955	40	81.4	82.6	81.9	0.76	9.3	2.3	5.2	2.6	63	75	1MB10■2-1CC2■-■■■■	39	0.021
5.5	6.3	132 M	955	55	83.1	84	83	0.75	12.7	2.7	5.7	3	63	75	1MB10■2-1CC3■-■■■■	48	0.027
7.5	8.6	160 M	970	74	84.7	84.8	83.2	0.73	17.5	2.1	5.5	2.9	67	79	1MB10■2-1DC2■-■■■■	72	0.056
11	12.6	160 L	965	109	86.4	86.8	85.9	0.77	24	1.9	5.9	2.7	67	79	1MB10■2-1DC4■-■■■■	92	0.078
8-pole: 750 rpm at 50 Hz, 900 rpm at 60 Hz [1]																	
0.75	0.86	100 L	705	10	61.2	58.1	50.5	0.62	2.85	1.9	3	2.2	60	72	1MB10■2-1AD4■-■■■■	17	0.0056
1.1	1.27	100 L	690	15	66.5	66	61.8	0.61	3.9	2	3.2	2.3	60	72	1MB10■2-1AD5■-■■■■	22	0.0078
1.5	1.75	112 M	700	20	70.2	71.1	68.7	0.66	4.65	1.9	3.5	2.1	63	75	1MB10■2-1BD2■-■■■■	29	0.0094
2.2	2.55	132 S	715	29	74.2	74.1	71.4	0.66	6.5	1.7	3.9	2.4	63	75	1MB10■2-1CD0■-■■■■	37	0.019
3	3.45	132 M	715	40	77	77.4	75.2	0.68	8.3	1.8	3.9	2.2	63	75	1MB10■2-1CD2■-■■■■	44	0.024
4	4.55	160 M	720	53	79.2	79.3	76.3	0.67	10.9	1.6	4.1	2.3	63	75	1MB10■2-1DD2■-■■■■	60	0.044
5.5	6.3	160 M	720	73	81.4	81.9	80.3	0.68	14.3	1.6	4	2.2	63	75	1MB10■2-1DD3■-■■■■	72	0.056
7.5	8.6	160 L	715	100	83.1	83.7	82.4	0.69	18.9	1.7	3.8	2.2	63	75	1MB10■2-1DD4■-■■■■	91	0.077

Zones			
Zone 21 (occasionally conductive and non-conductive dust) Ex tb IIIC			1
Zone 22 (rarely conductive or temporarily non-conductive dust) Ex tc IIIB			2
Zone 2 (rarely explosive or temporarily explosive gases) Ex ec IIC			3
Voltages		Version	Order code
50 Hz 230 VΔ/400 VY	60 Hz [1] 460 VY	**Standard**	2 2 –
50 Hz 400 VΔ/690 VY	60 Hz [1] 460 VΔ	**Standard**	3 4 –
50 Hz 500 VY		Without additional charge	2 7 –
50 Hz 500 VΔ		Without additional charge	4 0 –
For other voltages [1] and more information, see from page 5/28			9 0 . . .
Types of construction		Version	Order code
Without flange	IM B3 [2]	**Standard**	A –
With flange	IM B5 [2]	With additional charge	F –
With flange	IM B14 [2]	With additional charge	K –
For other types of construction and more information, see from page 5/30			■ . . .
Motor protection		Version	
Without		**Standard**	A
PTC thermistor with 3 temperature sensors		With additional charge	B
For other motor protection and more information, see from page 5/34			■
Terminal box position		Version	
Terminal box at top		**Standard**	4
For other terminal box positions and more information, see from page 5/36			■
Special versions			Order code(s)
For options, see from page 5/38			1MB10■2- . . . . ■-■■■■-Z . . .+. . .+. . .+. . .

[1] Operating values at rated power for 60 Hz are stored in the Drive Technology Configurator (DT Configurator; see Appendix, "Tools and engineering").

[2] Types derived from IM B3 (IM B6/7/8, IM V6 and IM V5), from IM B5 (IM V3 and IM V1) and from IM B14 (IM V19 and IM V18) are possible, provided that no requirements exist for condensation drainage holes (**H03**) or stamping of the type on the rating plate. The basic type IM B3, IM B5 or IM B14 is stamped as standard on the rating plate. For orders with condensation drainage holes (**H03**), the type must be specified.

[3] Parallel supply lines are required in the case of connection to ≤ 240 V. For frame size 315 with connection to ≤ 240 V, due to the high current, a drilled, removable entry plate (order code **R52**) or a larger terminal box (order code **R50**) can be used. Order codes **R52** and **R50** alter the motor dimensions.

[4] No IE class for 50 and 60 Hz because the motor is outside the validity for the efficiency classes according to IEC 60034-30-1:2014.

© Siemens AG 2018

Selection and ordering data

Voltages	Article No. supplement			Frame size						Motor version		
	Voltage code 12th and 13th position of the Article No.		Additional identification code with order code and plain text if required	80	90	100	112	132	160			
				1MB10.3						IEC	Ex tb (Zone 21), Ex tc (Zone 22), Ex ec (Zone 2)	IE3
				1MB10.1								IE2
						1MB10.2						IE1
1MB10- . . . . ■ - ■ . . .			Order code									
Voltage at 50 Hz or 60 Hz (50 Hz power)												
50 Hz 230 VΔ/400 VY, 60 Hz 460 VY	**2**	**2**	**–**	□	□	□	□	□	□			
50 Hz 400 VΔ/690 VY, 60 Hz 460 VΔ	**3**	**4**	**–**	□	□	□	□	□	□			
50 Hz 500 VY	**2**	**7**	**–**	○	○	○	○	○	○			
50 Hz 500 VΔ	**4**	**0**	**–**	–	–	○	○	○	○			
50 Hz 220 VΔ/380 VY, 60 Hz 440 VY	**2**	**1**	**–**	✓	✓	✓	✓	✓	✓			
50 Hz 380 VΔ/660 VY, 60 Hz 440 VΔ	**3**	**3**	**–**	✓	✓	✓	✓	✓	✓			
50 Hz 240 VΔ/415 VY, 60 Hz 480 VY	**2**	**3**	**–**	✓	✓	✓	✓	✓	✓			
50 Hz 415 VΔ, 60 Hz 480 VΔ	**3**	**5**	**–**	✓	✓	✓	✓	✓	✓			
50 Hz 400 VY, 60 Hz 460 VY [1]	**0**	**2**	**–**	○	○	○	○	○	○			
50 Hz 400 VΔ, 60 Hz 460 VΔ [2]	**0**	**4**	**–**	○	○	○	○	○	○			
60 Hz 220 VΔ/380 VY	**1**	**7**	**–**	✓	✓	✓	✓	✓	✓	Not for:	1MB10.2	
60 Hz 230 VΔ/400 VY	**1**	**8**	**–**	✓	✓	✓	✓	✓	✓	Not for:	1MB10.2	
60 Hz 380 VΔ/660 VY	**3**	**0**	**–**	✓	✓	✓	✓	✓	✓	Not for:	1MB10.2	
60 Hz 400 VΔ/690 VY	**3**	**1**	**–**	✓	✓	✓	✓	✓	✓	Not for:	1MB10.2	
50 Hz 400 VY	**9**	**0**	**M4A**	○	○	○	○	○	○			
50 Hz 400 VΔ	**9**	**0**	**M4B**	○	○	○	○	○	○			
Voltage at 60 Hz (50 Hz power)												
220 VΔ/380 VY; 50 Hz power [3]	**9**	**0**	**M2A**	✓	✓	✓	✓	✓	✓			
220 VΔ/380 VY; 60 Hz power	**9**	**0**	**M1A**	✓	✓	✓	✓	✓	✓			
380 VΔ/660 VY; 50 Hz power [3]	**9**	**0**	**M2B**	✓	✓	✓	✓	✓	✓			
380 VΔ/660 VY; 60 Hz power	**9**	**0**	**M1B**	✓	✓	✓	✓	✓	✓			
440 VY; 50 Hz power [3]	**9**	**0**	**M2C**	✓	✓	✓	✓	✓	✓			
440 VY; 60 Hz power	**9**	**0**	**M1C**	✓	✓	✓	✓	✓	✓			
440 VΔ; 50 Hz power [3]	**9**	**0**	**M2D**	✓	✓	✓	✓	✓	✓			
440 VΔ; 60 Hz power	**9**	**0**	**M1D**	✓	✓	✓	✓	✓	✓			
460 VY; 50 Hz power [3]	**9**	**0**	**M2E**	✓	✓	✓	✓	✓	✓			
460 VY; 60 Hz power	**9**	**0**	**M1E**	○	○	○	○	○	○			
460 VΔ; 50 Hz power [3]	**9**	**0**	**M2F**	✓	✓	✓	✓	✓	✓			
460 VΔ; 60 Hz power	**9**	**0**	**M1F**	○	○	○	○	○	○			
575 VY; 50 Hz power [3]	**9**	**0**	**M2G**	✓	✓	✓	✓	✓	✓			
575 VY; 60 Hz power	**9**	**0**	**M1G**	✓	✓	✓	✓	✓	✓			
575 VΔ; 50 Hz power [3]	**9**	**0**	**M2H**	✓	✓	✓	✓	✓	✓			
575 VΔ; 60 Hz power	**9**	**0**	**M1H**	✓	✓	✓	✓	✓	✓			
400 VΔ/690 VY; 50 Hz power	**9**	**0**	**M2J**	✓	✓	✓	✓	✓	✓			
400 VΔ/690 VY; 60 Hz power	**9**	**0**	**M1J**	✓	✓	✓	✓	✓	✓			
480 VY; 50 Hz power	**9**	**0**	**M2K**	✓	✓	✓	✓	✓	✓			
480 VY; 60 Hz power	**9**	**0**	**M1K**	✓	✓	✓	✓	✓	✓			
480 VΔ; 50 Hz power	**9**	**0**	**M2L**	✓	✓	✓	✓	✓	✓			
480 VΔ; 60 Hz power	**9**	**0**	**M1L**	✓	✓	✓	✓	✓	✓			
230 VΔ/400 VY; 50 Hz power	**9**	**0**	**M2M**	✓	✓	✓	✓	✓	✓			
230 VΔ/400 VY; 60 Hz power	**9**	**0**	**M1M**	✓	✓	✓	✓	✓	✓			
Voltage at 87 Hz (87 Hz power)												
400 VΔ [5]	**9**	**0**	**M3A**	✓	✓	✓	✓	✓	✓			
Non-standard voltage and/or frequencies												
Non-standard winding [4]	**9**	**0**	**M1Y** • and customer specifications	✓	✓	✓	✓	✓	✓			

□ Standard version
○ Without additional charge
✓ With additional charge
– Not possible
• This order code only determines the price of the version – Additional plain text is required.

1) Delta connection is not possible.
2) Star connection is not possible.
3) A power of 3.7 kW is stamped on the rating plate for versions 1MB1... - 1BA2, 1MB1... - 1BB2, 1MB1... - 1CC2 and 1MB1... - 1DD2 at 60 Hz with 50 Hz power in accordance with the international efficiency classification to IEC 60034-30.
4) Plain text must be specified in the order: Voltage between 200 and 690 V (voltages outside this range are available on request), frequency, circuit, for 60 Hz additionally required rated power in kW.
5) Only possible for 4-pole, 6-pole and 8-pole motors and in combination with the order codes **B40** and **B41**. The operating data for converter operation is also provided in a table on the additional rating plate. The motor contains winding version 50 Hz 230 VΔ.

© Siemens AG 2018

Selection and ordering data

Voltages	Article No. supplement			Frame size													Motor version		
	Voltage code 12th and 13th position of the Article No.		Additional identification code with order code and plain text if required	71	80	90	100	112	132	160	180	200	225	250	280	315			
				1MB15.3 Basic Line													IEC	Ex tb (Zone 21), Ex tc (Zone 22), Ex ec (Zone 2)	IE3
							1MB16.3 Performance Line												
				1MB15.1 Basic Line															IE2
							1MB16.1 Performance Line												
1MB15 . . - . . . . ■ - ■ .																			
1MB16 . . - . . . . ■ - ■ .			Order code																
Voltage at 50 Hz or 60 Hz																			
50 Hz 230 VΔ/400 VY, 60 Hz 460 VY	**2**	**2**	**–**	□	□	□	□	□	□	□	□	□	□	□	□	□			
50 Hz 400 VΔ/690 VY, 60 Hz 460 VΔ	**3**	**4**	**–**	□	□	□	□	□	□	□	□	□	□	□	□	□			
50 Hz 400 VY, 60 Hz 460 VY [1]	**0**	**2**	**–**	○	○	○	○	○	○	○	○	○	○	○	○	O. R.			
50 Hz 400 VΔ, 60 Hz 460 VΔ [2]	**0**	**4**	**–**	○	○	○	○	○	○	○	○	○	○	○	○	○			
50 Hz 500 VY	**2**	**7**	**–**	○	○	○	○	○	○	○	○	○	○	○	○	○			
50 Hz 500 VΔ	**4**	**0**	**–**	–	–	–	○	○	○	○	○	○	○	○	○	○			
50 Hz 220 VΔ/380 VY, 60 Hz 440 VY	**2**	**1**	**–**	✓	✓	✓	✓	✓	✓	✓	✓	✓	✓	✓	✓	✓			
50 Hz 380 VΔ/660 VY, 60 Hz 440 VΔ	**3**	**3**	**–**	✓	✓	✓	✓	✓	✓	✓	✓	✓	✓	✓	✓	✓			
50 Hz 240 VΔ/415 VY, 60 Hz 480 VY	**2**	**3**	**–**	✓	✓	✓	✓	✓	✓	✓	✓	✓	✓	✓	✓	✓			
50 Hz 415 VΔ, 60 Hz 480 VΔ	**3**	**5**	**–**	✓	✓	✓	✓	✓	✓	✓	✓	✓	✓	✓	✓	✓			
60 Hz 220 VΔ/380 VY	**1**	**7**	**–**	✓	✓	✓	✓	✓	✓	✓	✓	✓	✓	✓	✓	O. R.			
60 Hz 230 VΔ/400 VY	**1**	**8**	**–**	✓	✓	✓	✓	✓	✓	✓	✓	✓	✓	✓	✓	O. R.			
60 Hz 380 VΔ/660 VY	**3**	**0**	**–**	✓	✓	✓	✓	✓	✓	✓	✓	✓	✓	✓	✓	✓			
60 Hz 400 VΔ/690 VY	**3**	**1**	**–**	✓	✓	✓	✓	✓	✓	✓	✓	✓	✓	✓	✓	✓			
50 Hz 400 VY	**9**	**0**	**M4A**	○	○	○	○	○	○	○	○	○	○	○	○	○			
50 Hz 400 VΔ	**9**	**0**	**M4B**	○	○	○	○	○	○	○	○	○	○	○	○	○			
Voltage at 60 Hz and required power																			
220 VΔ/380 VY; 50 Hz power [3]	**9**	**0**	**M2A**	✓	✓	✓	✓	✓	✓	✓	✓	✓	✓	✓	✓	✓			
220 VΔ/380 VY; 60 Hz power	**9**	**0**	**M1A**	✓	✓	✓	✓	✓	✓	✓	✓	✓	✓	✓	✓	✓			
380 VΔ/660 VY; 50 Hz power [3]	**9**	**0**	**M2B**	–	–	–	✓	✓	✓	✓	✓	✓	✓	✓	✓	✓			
380 VΔ/660 VY; 60 Hz power	**9**	**0**	**M1B**	–	–	–	✓	✓	✓	✓	✓	✓	✓	✓	✓	✓			
440 VY; 50 Hz power [3]	**9**	**0**	**M2C**	–	–	–	✓	✓	✓	✓	✓	✓	✓	✓	✓	✓			
440 VY; 60 Hz power	**9**	**0**	**M1C**	–	–	–	✓	✓	✓	✓	✓	✓	✓	✓	✓	✓			
440 VΔ; 50 Hz power [3]	**9**	**0**	**M2D**	–	–	–	✓	✓	✓	✓	✓	✓	✓	✓	✓	✓			
440 VΔ; 60 Hz power	**9**	**0**	**M1D**	–	–	–	✓	✓	✓	✓	✓	✓	✓	✓	✓	✓			
460 VY; 50 Hz power [3]	**9**	**0**	**M2E**	–	–	–	✓	✓	✓	✓	✓	✓	✓	✓	✓	✓			
460 VY; 60 Hz power	**9**	**0**	**M1E**	–	–	–	○	○	○	○	○	○	○	○	○	○			
460 VΔ; 50 Hz power [3]	**9**	**0**	**M2F**	–	–	–	✓	✓	✓	✓	✓	✓	✓	✓	✓	✓			
460 VΔ; 60 Hz power	**9**	**0**	**M1F**	–	–	–	○	○	○	○	○	○	○	○	○	○			
575 VY; 50 Hz power [3]	**9**	**0**	**M2G**	–	–	–	✓	✓	✓	✓	✓	✓	✓	✓	✓	✓			
575 VY; 60 Hz power	**9**	**0**	**M1G**	–	–	–	✓	✓	✓	✓	✓	✓	✓	✓	✓	✓			
575 VΔ; 50 Hz power [3]	**9**	**0**	**M2H**	–	–	–	✓	✓	✓	✓	✓	✓	✓	✓	✓	✓			
575 VΔ; 60 Hz power	**9**	**0**	**M1H**	–	–	–	✓	✓	✓	✓	✓	✓	✓	✓	✓	✓			
400 VΔ/690 VY; 50 Hz power	**9**	**0**	**M2J**	✓	✓	✓	✓	✓	✓	✓	✓	✓	✓	✓	✓	✓			
400 VΔ/690 VY; 60 Hz power	**9**	**0**	**M1J**	✓	✓	✓	✓	✓	✓	✓	✓	✓	✓	✓	✓	✓			
480 VY; 50 Hz power	**9**	**0**	**M2K**	✓	✓	✓	✓	✓	✓	✓	✓	✓	✓	✓	✓	✓			
480 VY; 60 Hz power	**9**	**0**	**M1K**	✓	✓	✓	✓	✓	✓	✓	✓	✓	✓	✓	✓	✓			
480 VΔ; 50 Hz power	**9**	**0**	**M2L**	✓	✓	✓	✓	✓	✓	✓	✓	✓	✓	✓	✓	✓			
480 VΔ; 60 Hz power	**9**	**0**	**M1L**	✓	✓	✓	✓	✓	✓	✓	✓	✓	✓	✓	✓	✓			
230 VΔ/400 VY; 50 Hz power	**9**	**0**	**M2M**	✓	✓	✓	✓	✓	✓	✓	✓	✓	✓	✓	✓	O. R.			
230 VΔ/400 VY; 60 Hz power	**9**	**0**	**M1M**	✓	✓	✓	✓	✓	✓	✓	✓	✓	✓	✓	✓	O. R.			
Voltage at 87 Hz (87 Hz power)																			
400 VΔ [5]	**9**	**0**	**M3A**	✓	✓	✓	✓	✓	✓	✓	✓	✓	✓	✓	✓	✓			
Non-standard voltage and/or frequencies																			
Non-standard winding [4]	**9**	**0**	**M1Y** • and customer specifications	✓	✓	✓	✓	✓	✓	✓	✓	✓	✓	✓	✓	✓			

□ Standard version
○ Without additional charge
✓ With additional charge
– Not possible
• This order code only determines the price of the version – Additional plain text is required.

1) Delta connection is not possible.

2) Star connection is not possible.

3) A power of 3.7 kW is stamped on the rating plate for versions 1MB1... - 1BA2, 1MB1... - 1BB2, 1MB1... - 1CC2 and 1MB1... - 1DD2 at 60 Hz with 50 Hz power in accordance with the international efficiency classification to IEC 60034-30.

4) Plain text must be specified in the order: Voltage between 200 and 690 V (voltages outside this range are available on request), frequency, circuit, for 60 Hz additionally required rated power in kW.

5) Only possible for 4-pole, 6-pole and 8-pole motors and in combination with the order codes **B40** and **B41**. The operating data for converter operation is also provided in a table on the additional rating plate. The motor contains winding version 50 Hz 230 VΔ.

© Siemens AG 2018

Selection and ordering data

Types of construction		Article No. supplement		Frame size						Motor version		
		Type of construction code letter 14th position of the Article No.	For types of construction with order code(s) Article No. with additional identification code **-Z**	**80**	**90**	**100**	**112**	**132**	**160**			
				1MB10.3						IEC	Ex tb (Zone 21), Ex tc (Zone 22), Ex ec (Zone 2)	IE3
				1MB10.1								IE2
						1MB10.2						IE1
1MB10 . . - . . . . . - .		**■ . . (-Z)**	Order code									
Without flange												
IM B3		**A**	**–**	□	□	□	□	□	□			
IM B6 [1]	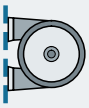	**T**	**–**	□	□	□	□	□	□			
IM B7 [1]	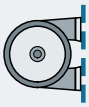	**U**	**–**	□	□	□	□	□	□			
IM B8 [1]		**V**	**–**	□	□	□	□	□	□			
IM V6 [1]	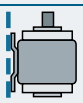	**D**	**–**	□	□	□	□	□	□			
IM V5 with protective cover [1] [2]	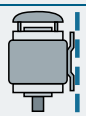	**C**	**H00**	✓	✓	✓	✓	✓	✓			
With flange		**Acc. to EN 50347 Acc. to DIN 42 948**		**FF165 A 200**	**FF165 A 200**	**FF215 A 250**	**FF215 A 250**	**FF265 A 300**	**FF300 A 350**			
IM B5	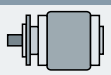	**F**	**–**	✓	✓	✓	✓	✓	✓			
IM V1 with protective cover [1] [2]		**G**	**H00**	✓	✓	✓	✓	✓	✓			
IM V3 [1]		**H**	**–**	✓	✓	✓	✓	✓	✓			
IM B35	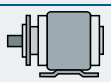	**J**	**–**	✓	✓	✓	✓	✓	✓			

For legends and footnotes, see page 5/31.

© Siemens AG 2018

Types of construction		Article No. supplement		Frame size						Motor version		
		Type of construction code letter 14th position of the Article No.	For types of construction with order code(s) Article No. with additional identification code **-Z**	**80**	**90**	**100**	**112**	**132**	**160**			
				1MB10.3						IEC	Ex tb (Zone 21), Ex tc (Zone 22), Ex ec (Zone 2)	IE3
				1MB10.1								IE2
						1MB10.2						IE1
1MB10 . . - . . . . . - . ■ **. . (-Z)**			Order code									
With flange		**Acc. to EN 50347 Acc. to DIN 42 948**		**FT100 C 120**	**FT115 C 140**	**FT130 C 160**	**FT130 C 160**	**FT165 C 200**	**FT215 C 250**			
IM B14 [1]		**K**	**–**	✓	✓	✓	✓	✓	✓			
IM V19 [1]	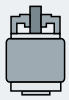	**L**	**–**	✓	✓	✓	✓	✓	✓			
IM V18 with protective cover [1] [2]	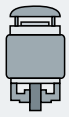	**M**	**H00**	✓	✓	✓	✓	✓	✓			
IM B34	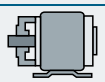	**N**	**–**	✓	✓	✓	✓	✓	✓			
With special flange next largest		**Acc. to EN 50347 Acc. to DIN 42 948**		**FT130 C 160**	**FT130 C 160**	**FT165 C 200**	**FT165 C 200**	**FT215 C 250**	**FT265 C 300**			
IM B14 [1]	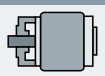	**K**	**P01**	✓	✓	✓	✓	✓	–			
IM V19 [1]	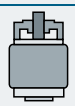	**L**	**P01**	–	–	✓	✓	✓	–			
IM V18 with protective cover [1] [2]	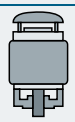	**M**	**P01+H00**	–	–	✓	✓	✓	–			
IM B34	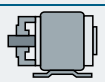	**N**	**P01**	–	–	✓	✓	✓	–			

■ Standard version
✓ With additional charge
– Not possible

[1] The following applies for explosion-proof motors: In the case of the types of construction with shaft extension down, the version "with protective cover" is required. For types of construction with shaft extension pointing upwards, a suitable cover must be implemented to prevent small parts from falling into the fan cover (see the standard IEC/EN 60079-0). The cover must not block the cooling air flow.

[2] The "Standard cylindrical shaft extension (second shaft extension)" option (order code **L05**) is not possible.

© Siemens AG 2018

Selection and ordering data

Types of construction	Article No. supplement		Frame size														Motor version		
	Type of construction code letter 14th position of the Article No.	For types of construction with order code(s) Article No. with additional identification code **-Z**	**71**	**80**	**90**	**100**	**112**	**132**	**160**	**180**	**200**	**225**	**250**	**280**	**315 S/M**	**315 L**			
			1MB15.3 Basic Line														IEC	Ex tb (Zone 21), Ex tc (Zone 22), Ex ec (Zone 2)	IE3
						1MB16.3 Performance Line													
			1MB15.1 Basic Line																IE2
1MB15 . . - . . . . . - . ■ . . (-Z)						**1MB16.1 Performance Line**												
1MB16 . . - . . . . . - . ■ . . (-Z)		Order code																	
Without flange																			
IM B3	**A**	**–**	□	□	□	□	□	□	□	□	□	□	□	□	□	□			
IM B6 1) 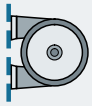	**T**	**–**	□	□	□	□	□	□	□	□	□	□	□	□	□	□			
IM B7 1) 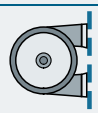	**U**	**–**	□	□	□	□	□	□	□	□	□	□	□	□	□	□			
IM B8 1)	**V**	**–**	□	□	□	□	□	□	□	□	□	□	□	□	□	□			
IM V6 1) 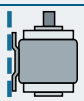	**D**	**–**	□	□	□	□	□	□	□	□	□	□	□	□	□	□			
IM V5 with protective cover 1) 2) 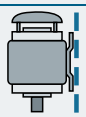	**C**	**H00**	✓	✓	✓	✓	✓	✓	✓	✓	✓	✓	✓	✓	✓	✓			
With flange	**Acc. to EN 50347 Acc. to DIN 42 948**		**FF130 A 160**	**FF165 A 200**	**FF165 A 200**	**FF215 A 250**	**FF215 A 250**	**FF265 A 300**	**FF300 A 350**	**FF300 A 350**	**FF350 A 400**	**FF400 A 450**	**FF500 A 550**	**FF500 A 550**	**FF600 A 660**	**FF600 A 660**			
IM B5 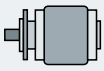	**F**	**–**	✓	✓	✓	✓	✓	✓	✓	✓	✓	✓	✓	✓	✓	–			
IM V1 with protective cover 1) 2) 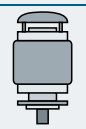	**G**	**H00**	✓	✓	✓	✓	✓	✓	✓	✓	✓	✓	✓	✓	✓	✓			
IM V3 1)	**H**	**–**	✓	✓	✓	✓	✓	✓	✓	✓	✓	✓	✓	✓	✓	–			
IM B35 1) 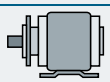	**J**	**–**	✓	✓	✓	✓	✓	✓	✓	✓	✓	✓	✓	✓	✓	✓			

For legends and footnotes, see page 5/33.

© Siemens AG 2018

Types of construction · Cast-iron series 1MB15 Basic Line, 1MB16 Performance Line

Types of construction	Article No. supplement		Frame size													Motor version		
	Type of construction code letter 14th position of the Article No.	For types of construction with order code(s) Article No. with additional identification code **-Z**	**71**	**80**	**90**	**100**	**112**	**132**	**160**	**180**	**200**	**225**	**250**	**280**	**315 S/M**	**315 L**		
			1MB15.3 Basic Line														IEC	Ex tb (Zone 21), Ex tc (Zone 22), Ex ec (Zone 2)	IE3
						1MB16.3 Performance Line													IE2
			1MB15.1 Basic Line																
1MB15 . . - . . . . . - . ■ **. . (-Z)**						**1MB16.1 Performance Line**													
1MB16 . . - . . . . . - . ■ **. . (-Z)**		Order code																	
With flange	**Acc. to EN 50347 Acc. to DIN 42 948**		FT85 C 105	FT100 C 120	FT115 C 140	FT130 C 160	FT130 C 160	FT165 C 200	FT215 C 250	– –	– –	– –	– –	– –	– –	– –			
IM B14 1)	**K**	**–**	✓	✓	✓	✓	✓	✓	✓	–	–	–	–	–	–	–			
IM V19 1)	**L**	**–**	✓	✓	✓	✓	✓	✓	✓	–	–	–	–	–	–	–			
IM V18 with protective cover 1) 2)	**M**	**H00**	✓	✓	✓	✓	✓	✓	✓	–	–	–	–	–	–	–			
IM B34	**N**	**–**	✓	✓	✓	✓	✓	✓	✓	–	–	–	–	–	–	–			
With special flange next largest	**Acc. to EN 50347 Acc. to DIN 42 948**		FT115 C 140	FT130 C 160	FT130 C 160	FT165 C 200	FT165 C 200	FT215 C 250	– –	– –	– –	– –	– –	– –	– –	– –			
IM B14 1)	**K**	**P01**	✓	✓	✓	✓	✓	✓	–	–	–	–	–	–	–	–			
IM V19 1)	**L**	**P01**	✓	✓	✓	✓	✓	✓	–	–	–	–	–	–	–	–			
IM V18 with protective cover 1) 2)	**M**	**P01+ H00**	✓	✓	✓	✓	✓	✓	–	–	–	–	–	–	–	–			
IM B34	**N**	**P01**	✓	✓	✓	✓	✓	✓	–	–	–	–	–	–	–	–			

■ Standard version
✓ With additional charge
– Not possible

1) The following applies for explosion-proof motors: In the case of the types of construction with shaft extension down, the version "with protective cover" is required. For types of construction with shaft extension pointing upwards, a suitable cover must be implemented to prevent small parts from falling into the fan cover (see the standard IEC/EN 60079-0). The cover must not block the cooling air flow.

2) The "Standard cylindrical shaft extension (second shaft extension)" option (order code **L05**) is not possible.

© Siemens AG 2018

Selection and ordering data

Motor protection	Article No. supplement		Frame size						Motor version		
	Motor protection code letter 15th position of the Article No.	Additional identification code with order code and plain text, if required	80	90	100	112	132	160			
			1MB10.3						IEC	Ex tb (Zone 21), Ex tc (Zone 22), Ex ec (Zone 2)	IE3 / IE2 / IE1
			1MB10.1								
					1MB10.2						
1MB10 . . - . . . . . - . . ■ .		Order code									
Motor protection											
None (standard)	**A**	–	□	□	□	□	□	□			
1 or 3 PTC thermistors – for tripping (2 terminals) [1]	**B**	–	✓	✓	✓	✓	✓	✓			
2 or 6 PTC thermistors – for alarm and tripping (4 terminals) [1]	**C**	–	✓	✓	✓	✓	✓	✓			
1 KTY84-130 temperature sensor (2 terminals) [1]	**F**	–	✓	✓	✓	✓	✓	✓			
2 KTY84-130 temperature sensors (4 terminals) [1]	**G**	–	✓	✓	✓	✓	✓	✓			
3 Pt100 resistance thermometers – 2-wire input (6 terminals) [1] [2]	**H**	–	–	–	✓	✓	✓	✓			
1 Pt1000 resistance thermometers (2 terminals) [1]	**K**	–	✓	✓	✓	✓	✓	✓			
2 Pt1000 resistance thermometers (4 terminals) [1]	**L**	–	✓	✓	✓	✓	✓	✓			

□ Standard version
✓ With additional charge
– Not possible

[1] Evaluation with associated tripping unit (see Catalog IC 10) is recommended. In converter operation, PTC thermistor motor protection is always required.

[2] In combination with the 15th position of the Article No. "**H**", the order codes **Q02** and **Q03** are not possible for frame sizes 100 to 160. It can only be supplied with a star or delta winding for direct switch-on (3 terminals).

© Siemens AG 2018

Selection and ordering data

Motor protection	Article No. supplement		Frame size												Motor version		
	Motor protection code letter 15th position of the Article No.	Additional identification code with order code and plain text, if required	71	80	90	100	112	132	160	180	200	225	250	280	315		
			1MB15.3 Basic Line													IEC	Ex tb (Zone 21), Ex tc (Zone 22), Ex ec (Zone 2)	IE3
						1MB16.3 Performance Line												
			1MB15.1 Basic Line															IE2
						1MB16.1 Performance Line												
1MB15 . . - . . . . . - . . ■ .																		
1MB16 . . - . . . . . - . . ■ .		Order code																
Motor protection																		
None (standard)	**A**	–	□	□	□	□	□	□	□	□	□	□	□	□	□	Only for:	1MB15.. Basic Line	
1 or 3 PTC thermistors – for tripping (2 terminals) [1]	**B**	–	✓	✓	✓	✓	✓	✓	✓	✓	✓	✓	✓	✓	✓			
2 or 6 PTC thermistors – for alarm and tripping (4 terminals) [2]	**C**	–	✓	✓	✓	✓	✓	✓	✓	✓	✓	✓	✓	✓	✓	Only for:	1MB15.. Basic Line	
			–	–	–	□	□	□	□	□	□	□	□	□	□	Only for:	MB16.. Performance Line	
1 KTY84-130 temperature sensor (2 terminals) [2]	**F**	–	✓	✓	✓	✓	✓	✓	✓	✓	✓	✓	✓	✓	✓			
2 KTY84-130 temperature sensor (4 terminals) [2]	**G**	–	✓	✓	✓	✓	✓	✓	✓	✓	✓	✓	✓	✓	✓			
3 Pt100 resistance thermometers – 2-wire input (6 terminals) [2] [3]	**H**	–	✓	✓	✓	✓	✓	✓	✓	✓	✓	✓	✓	✓	✓			
6 Pt100 resistance thermometers – 2-wire input (12 terminals) [2]	**J**	–	–	–	–	–	–	–	–	✓	✓	✓	✓	✓	✓			
1 Pt1000 resistance thermometer (2 terminals) [2]	**K**	–	✓	✓	✓	✓	✓	✓	✓	✓	✓	✓	✓	✓	✓			
2 Pt1000 resistance thermometers (4 terminals) [2]	**L**	–	✓	✓	✓	✓	✓	✓	✓	✓	✓	✓	✓	✓	✓			

□ Standard version
✓ With additional charge
– Not possible

[1] For the Performance Line, motor protection by means of PTC thermistors with 3 built-in temperature sensors for tripping (motor protection code B) is already included in the basic price. For the Performance Line, the option "without motor protection" (motor protection code A) is not possible.

[2] Evaluation with associated tripping unit (see Catalog IC 10) is recommended. In converter operation, PTC thermistor motor protection is always required.

[3] In combination with the 15th position of the Article No. "**H**", the order codes **Q02** and **Q03** are not possible for frame sizes 100 to 160. It can only be supplied with a star or delta winding for direct switch-on (3 terminals).

© Siemens AG 2018

Terminal box position · Aluminum series 1MB10

Selection and ordering data

Terminal box position	Article No. supplement		Frame size						Motor version		
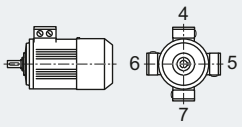	Terminal box position code 16th position of the Article No.	Additional identification code with order code and plain text, if required	**80**	**90**	**100**	**112**	**132**	**160**			
			1MB10.3						IEC	Ex tb (Zone 21), Ex tc (Zone 22), Ex ec (Zone 2)	IE3
			1MB10.1								IE2
					1MB10.2						IE1
1MB10 . . - . . . . . - . . . ■		Order code									
Terminal box position											
Terminal box top [1]	**4**	–	□	□	□	□	□	□			
Terminal box right-hand side [2]	**5**	–	✓	✓	✓	✓	✓	✓			
Terminal box left-hand side [2]	**6**	–	✓	✓	✓	✓	✓	✓			
Terminal box at bottom [2] [3]	**7**	–	–	–	✓	✓	✓	✓			

□ Standard version
✓ With additional charge

[1] For types of construction with feet, cast feet are standard.
[2] For foot-mounted designs, screwed-on feet are standard.
[3] Not generally possible for motors with feet.

© Siemens AG 2018

Selection and ordering data

Terminal box position	Article No. supplement		Frame size													Motor version		
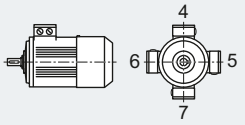	Terminal box position code 16th position of the Article No.	Additional identification code with order code and plain text, if required	**71**	**80**	**90**	**100**	**112**	**132**	**160**	**180**	**200**	**225**	**250**	**280**	**315**			
			1MB15.3 Basic Line													IEC	Ex tb (Zone 21), Ex tc (Zone 22), Ex ec (Zone 2)	IE3
						1MB16.3 Performance Line												
			1MB15.1 Basic Line															IE2
						1MB16.1 Performance Line												
1MB15 . . - . . . . . - . . . ■																		
1MB16 . . - . . . . . - . . . ■		Order code																
Terminal box position																		
Terminal box top [1]	**4**	**–**	□	□	□	□	□	□	□	□	□	□	□	□	□			
Terminal box right-hand side [2]	**5**	**–**	–	✓	✓	✓	✓	✓	✓	✓	✓	✓	✓	✓	✓			
Terminal box left-hand side [2]	**6**	**–**	–	✓	✓	✓	✓	✓	✓	✓	✓	✓	✓	✓	✓			
Terminal box bottom [3]	**7**	**–**	–	–	–	✓	✓	✓	✓	–	–	–	–	–	–			

□ Standard version
✓ With additional charge
– Not possible

[1] For types of construction with feet, cast feet are standard.
[2] For foot-mounted designs, screwed-on feet are standard.
[3] Not generally possible for motors with feet.

© Siemens AG 2018

Options · Aluminum series 1MB10

Selection and ordering data

Special versions	Additional identification code **-Z** with order code and plain text if required	Frame size 80	90	100	112	132	160	Motor version		
		1MB10.3						IEC	Ex tb (Zone 21), Ex tc (Zone 22), Ex ec (Zone 2)	IE3
		1MB10.1								IE2
				1MB10.2						IE1
1MB10 . . - . . . . . - . . . . -Z	Order code									
Explosion-proof version										
Version (IP55) for Zones 2 or 22, for non-conductive dust [1) 14)]	**B30**	✓	✓	✓	✓	✓	✓	Only for:	1MB103. – Ex ec (Zone 2)	
Design for Zone 2 in Ex ec IIB T3 Gc	**B31**	○	○	○	○	○	○	Only for:	1MB103. – Ex ec (Zone 2)	
VIK version	**C02**	✓	✓	✓	✓	✓	✓	Only for:	1MB1033 – Ex ec IE3 (Zone 2), 1MB1031 – Ex ec IE2 (Zone 2)	
Version for converter operation										
Version for converter operation in basic version with operating data SINAMICS G120 with PM240-2. [15)]	**B40**	✓	✓	✓	✓	✓	✓			
Version for converter operation in basic version with operating data SINAMICS S150. [15)]	**B41**	✓	✓	✓	✓	✓	✓			
Operating data such as order code **B40** with alternative SINAMICS converters on the rating plate • G120 with PM230 • G120 with PM240 • G120C • G120P with PM230 • G120P with PM240-2 • G120P with PM240P-2 • G120P with PM330 • G130, G150, G180 • S120 (BLM/SLM) • V20 Operating data such as order code **B41** with alternative SINAMICS converters on the rating plate • S120 (ALM)	**Y68** • and converter type	○	○	○	○	○	○			
Motor protection										
1 Pt1000 resistance thermometer (2 terminals)	**Q35**	✓	✓	✓	✓	✓	✓			
2 Pt1000 resistance thermometers (4 terminals)	**Q36**	✓	✓	✓	✓	✓	✓			
Motor connection and terminal box										
External grounding		◘	◘	◘	◘	◘	◘			
Rotation of the terminal box through 90°, entry from DE	**R10**	○	○	○	○	○	○			
Rotation of the terminal box through 90°, entry from NDE	**R11**	○	○	○	○	○	○			
Rotation of the terminal box through 180°	**R12**	○	○	○	○	○	○			
Metal cable gland, maximum configuration, certified according to ATEX	**R18**	✓	✓	✓	✓	✓	✓			
Larger terminal box	**R50**	◘	◘	–	–	–	–			
Windings and insulation										
Temperature class 155 (F), utilized acc. to 130 (B), coolant temperature 45 °C, derating approx. 4 % [2)]	**N05**	✓	✓	✓	✓	✓	✓			
Temperature class 155 (F), utilized acc. to 130 (B), coolant temperature 50 °C, derating approx. 8 % [2)]	**N06**	✓	✓	✓	✓	✓	✓			
Temperature class 155 (F), utilized acc. to 130 (B), coolant temperature 55 °C, derating approx. 13 % [2)]	**N07**	✓	✓	✓	✓	✓	✓			
Temperature class 155 (F), utilized acc. to 130 (B), coolant temperature 60 °C, derating approx. 18 %	**N08**	✓	✓	✓	✓	✓	✓			
Increased air humidity/temperature with 30 to 60 g water per m^3 of air	**N30**	✓	✓	✓	✓	✓	✓			

For legends and footnotes, see page 5/41.

© Siemens AG 2018

Special versions	Additional identification code **-Z** with order code and plain text if required	Frame size 80	90	100	112	132	160	Motor version
		1MB10.3						IEC Ex tb (Zone 21), Ex tc (Zone 22), Ex ec (Zone 2) IE3
		1MB10.1						IE2
				1MB10.2				IE1
1MB10 . . - . . . . . - . . . . -Z	Order code							
Windings and insulation (continued)								
Increased air humidity/temperature with 60 to 100 g water per m^3 of air	**N31**	✓	✓	✓	✓	✓	✓	
Temperature class 155 (F), utilized acc. to 130 (B), with higher coolant temperature and/or installation altitude	**Y50 •** and spec. power, CT .. °C or IA …. m above sea level	✓	✓	✓	✓	✓	✓	
Colors and paint finish								
Special paint finish in RAL 7030 stone gray		◘	◘	◘	◘	◘	◘	
Unpainted (only cast-iron parts primed)	**S00**	○	○	○	○	○	○	
Unpainted, only primed	**S01**	✓	✓	✓	✓	✓	✓	
Special paint finish C3	**S02**	✓	✓	✓	✓	✓	✓	
Special paint finish sea air resistant C4	**S03**	✓	✓	✓	✓	✓	✓	
Top coat polyurethane [12]	**S06**	✓	✓	✓	✓	✓	✓	Only for: 1MB103. – Ex ec (Zone 2)
Paint finish in other standard RAL colors: RAL 1002, 1013, 1015, 1019, 2003, 2004, 3000, 3007, 5002, 5007, 5009, 5010, 5012, 5015, 5017, 5018, 5019, 6011, 6019, 6021, 7000, 7001, 7004, 7011, 7016, 7022, 7031, 7032, 7033, 7035, 9001, 9002, 9005 (see Catalog Section 1 "Introduction")	**Y53 •** and paint finish RAL ….	✓	✓	✓	✓	✓	✓	
Paint finish in special RAL colors: For RAL colors, see "Special paint finish in special RAL colors" (see Catalog Section 1 "Introduction")	**Y56 •** and paint finish RAL ….	✓	✓	✓	✓	✓	✓	
Modular technology – Basic versions								
Mounting of explosion-proof separately driven fan [17]	**F70**	–	–	–	–	–	–	Only for: 1MB101. – Ex tb (Zone 21)
		–	–	✓	✓	✓	✓	Only for: 1MB102. – Ex tc (Zone 22), 1MB103. – Ex ec (Zone 2)
Special technology								
Mounting of explosion-proof rotary pulse encoder for use in Zones 2, 21 and 22 [16]	**G30**	–	–	✓	✓	✓	✓	
Mechanical version and degrees of protection								
Low-noise version for 2-pole motors with clockwise direction of rotation	**F77**	–	–	–	–	✓	✓	
Low-noise version for 2-pole motors with counterclockwise direction of rotation	**F78**	–	–	–	–	✓	✓	
Mechanical protection for encoder	**G43**	◘	◘	◘	◘	◘	◘	
Protective cover	**H00**	✓	✓	✓	✓	✓	✓	
Vibration-proof version; vibration resistance to Class 3M4 according to IEC 60721-3-3:1994	**H02**	✓	✓	✓	✓	✓	✓	
Condensation drainage holes [6]	**H03**	✓	✓	✓	✓	✓	✓	
Rust-resistant screws (externally)	**H07**	✓	✓	✓	✓	✓	✓	
Degree of protection IP65 [4]	**H20**	✓	✓	✓	✓	✓	✓	Only for: 1MB103. – Ex ec (Zone 2)
Degree of protection IP56 [5]	**H22**	✓	✓	✓	✓	✓	✓	Only for: 1MB103. – Ex ec (Zone 2)
Drive-end seal for flange-mounting motors, oil-tight to 0.1 bar [3]	**H23**	✓	✓	✓	✓	✓	✓	
Coolant temperature and installation altitude								
Coolant temperature –40 °C to +40 °C	**D03**	✓	✓	✓	✓	✓	✓	
Versions in accordance with standards and specifications								
EAC Ex certificate for the Eurasian customs union [18]	**D35**	–	–	✓	✓	✓	✓	
IEC Ex certification	**D37**	✓	✓	–	–	–	–	Only for: 1MB101. – Ex tb (Zone 21)
		✓	✓	✓	✓	✓	✓	Only for: 1MB102. – Ex tc (Zone 22), 1MB103. – Ex ec (Zone 2)

For legends and footnotes, see page 5/41.

© Siemens AG 2018

Options · Aluminum series 1MB10

Special versions	Additional identification code **-Z** with order code and plain text if required	Frame size 80	90	100	112	132	160	Motor version		
		1MB10.3						IEC	Ex tb (Zone 21), Ex tc (Zone 22), Ex ec (Zone 2)	IE3
		1MB10.1								IE2
				1MB10.2						IE1
1MB10 . . - . . . . . - . . . . -Z	Order code									
Bearings and lubrication										
Located bearing DE	**L20**	✓	✓	✓	✓	✓	✓			
Located bearing NDE	**L21**	✓	✓	✓	✓	✓	□			
Bearing design for increased cantilever forces [13]	**L22**	–	–	✓	✓	✓	✓			
Regreasing device	**L23**	–	–	✓	✓	✓	✓			
Bearings reinforced at both ends for DE and NDE, bearing size 63	**L25**	–	–	✓	✓	✓	✓			
Measuring nipple for SPM shock pulse measurement for bearing inspection	**Q01**	–	–	✓	✓	✓	✓			
Balance and vibration severity										
Vibration severity grade A		□	□	□	□	□	□			
Vibration severity grade B [19]	**L00**	✓	✓	✓	✓	✓	✓			
Half-key balancing		□	□	□	□	□	□			
Balancing without feather key	**L01**	✓	✓	✓	✓	✓	✓			
Full-key balancing	**L02**	✓	✓	✓	✓	✓	✓			
Shaft and rotor										
Shaft extension with standard dimensions, without feather keyway	**L04**	–	–	✓	✓	✓	✓			
Standard, cylindrical shaft extension (second shaft extension) NDE acc. to EN 50347	**L05**	✓	✓	✓	✓	✓	✓			
Standard shaft made of stainless steel (e.g. 1.4021)	**L06**	✓	✓	✓	✓	✓	✓			
Concentricity of shaft extension in accordance with DIN 42955 Tolerance R	**L07**	✓	✓	✓	✓	✓	✓			
Concentricity of shaft extension, coaxiality and linear movement in accordance with DIN 42955 Tolerance R for flange-mounted motors	**L08**	✓	✓	✓	✓	✓	✓			
Non-standard cylindrical shaft extension DE [7]	**Y58** • and customer specifications	✓	✓	✓	✓	✓	✓			
Non-standard cylindrical shaft extension NDE [7]	**Y59** • and customer specifications	✓	✓	✓	✓	✓	✓			
Heating and ventilation										
Metal external fan [8]	**F76**	□	□	–	–	–	–	Only for:	1MB103. – Ex ec (Zone 2)	
		□	□	✓	✓	✓	✓	Only for:	1MB101. – Ex tb (Zone 21), 1MB102. – Ex tc (Zone 22)	
Anti-condensation heating for 230 V (2 terminals) [9]	**Q02**	✓	✓	✓	✓	✓	✓			
Anti-condensation heating for 115 V (2 terminals) [9]	**Q03**	✓	✓	✓	✓	✓	✓			
Rating plate and additional rating plates										
Second rating plate, loose	**M10**	✓	✓	✓	✓	✓	✓			
Rating plate, stainless steel	**M11**	✓	✓	✓	✓	✓	✓			
Additional rating plate with deviating rating plate data	**Y80** • and customer specifications	✓	✓	✓	✓	✓	✓			
Additional rating plate with customer specifications	**Y82** • and customer specifications	✓	✓	✓	✓	✓	✓			
Additional information on rating plate and on package label (max. 20 characters)	**Y84** • and customer specifications	✓	✓	✓	✓	✓	✓			

For legends and footnotes, see page 5/41.

© Siemens AG 2018

Special versions	Additional identification code **-Z** with order code and plain text if required		Frame size 80	90	100	112	132	160	Motor version		
			1MB10.3						IEC	Ex tb (Zone 21), Ex tc (Zone 22), Ex ec (Zone 2)	IE3
			1MB10.1								IE2
					1MB10.2						IE1
1MB10 . . - . . . . . - . . . . -Z	Order code										
Packaging, safety notes, documentation and test certificates											
Printed Operating Instructions (Compact) for explosion-proof motors enclosed in English and German [11]			□	□	□	□	□	□			
Acceptance test certificate 3.1 according to EN 10204 [10]	**B02**		✓	✓	✓	✓	✓	✓			
Printed German/English Operating Instructions enclosed	**B04**		✓	✓	✓	✓	✓	✓			
Type test with heat run for horizontal motors, with acceptance	**B83**		✓	✓	✓	✓	✓	✓			
"Basic" documentation package	**B90**	*New!*	✓	✓	✓	✓	✓	✓			
"Advanced" documentation package	**B91**	*New!*	✓	✓	✓	✓	✓	✓			
"Projects" documentation package	**B92**	*New!*	✓	✓	✓	✓	✓	✓			
Wire-lattice pallet packaging	**B99**		○	○	○	○	○	○			
Connected in star for shipping	**M01**		–	–	✓	✓	✓	✓			
Connected in delta for dispatch	**M02**		–	–	✓	✓	✓	✓			
Printed Operating Instructions (Compact) for explosion-proof motors enclosed in other official EU languages [11]	**Y98** • and customer specifications		✓	✓	✓	✓	✓	✓			

□ Standard version
○ Without additional charge
• This order code only determines the price of the version – Additional plain text is required.
✓ With additional charge
– Not possible

1) Please inquire regarding combination with order codes **D03** and **C02**. Not possible in combination with order codes **H20** and **H22**.

2) There is no derating in combination with order codes **M2A**, **M2B**, **M2C**, **M2D**, **M2E**, **M2F**, **M2G**, **M2H**.

3) Not possible for type of construction IM V3.

4) For Zone 21, IP65 degree of protection is standard. Not possible for Zone 22, because only IP55 degree of protection is required.

5) Not admissible for Zone 21 (IP65 degree of protection) and Zone 22 (IP55 degree of protection).

6) Supplied with the condensation drainage holes sealed at the drive end DE and non-drive end NDE (IP55, IP56, IP65). If the condensation drainage holes are required for motors of the IM B6, IM B7 or IM B8 type of construction (feet on side or top), the motors must be ordered in the respective type of construction and with order code **H03**, so that the condensation drainage holes will be placed in the correct position.

7) When motors are ordered that have a longer or shorter shaft extension than normal, the required position and length of the feather keyway must be specified in a sketch. It must be ensured that only feather keys in accordance with DIN 6885, Form A are permitted to be used. The feather keyway is positioned centrally on the shaft extension. The length is defined by the manufacturer in accordance with the appropriate standard. Not valid for: Conical shafts, non-standard threaded journals, non-standard shaft tolerances, friction welded journals, extremely "thin" shafts, special geometry dimensions (e.g. square journals), hollow shafts. Valid for non-standard shaft extensions DE or NDE. The feather keys are supplied in every case. For order codes **Y58**, **Y59** and **L05** the following applies:
– Dimensions D and DA ≤ ball bearing inner diameter (see dimension tables for "Dimensions")
– Dimensions E and EA ≤ 2 × length E (standard) of the shaft extension
For an explanation of the order codes, see Catalog Section 1 "Introduction".

8) The metal external fan is not possible in combination with the low-noise version – order code **F77** or **F78**.

9) In combination with the 15th position of the article number "**H**", the order codes **Q02** and **Q03** are not possible for frame sizes 100 to 160. It can only be supplied with a star or delta winding for direct switch-on (3 terminals).

10) The delivery time for the acceptance test certificate may differ from the delivery time for the motor.

11) The Operating Instructions (Compact) are available in PDF format for all official EU languages at http://support.automation.siemens.com/WW/view/en/10803948/133300

12) Order code **S06** cannot be combined with order code **S00** and **S01**. It can be combined with **Y53** and **Y56** on request.

13) A minimum cantilever force F_{min} of 0.5 · F_{max} is required for NU bearings (cylindrical roller bearings) in contrast to ball bearings. Cylindrical roller bearings are not suitable for coupling output or for brief periods of no-load operation without cantilever force.

14) The Ex motor is not admissible in an explosive atmosphere of dust and air (hybrid). A standard is not currently available that describes the product requirements for a hybrid mixture.

15) In combination with order codes **B40** and **B41**, "B" or "C" must be added to the 15th position of the Article No. . For compliance with the admissible temperature class 130 (B), derating is necessary in the case of converter operation in Zones 2, 21 and 22. The operating data for SINAMICS converters from Siemens are on the rating plate – the torque is reduced in contrast to line operation. The motor operating data for converter operation is available in the DTC selection and ordering tool.
For converter operation, voltage codes/order codes are only admissible with one voltage only. When used in hazardous zones, the frequency converter must have a certified trip unit for motors of device category 1 (Zone 21). A certified trip unit is also recommended for motors of device category 3 (Zones 2 and 22). Alternatively, an external, certified trip unit can be used (see Catalog IC 10).

16) Can be combined with order codes **N30**, **N31**, **L51** and **F70** on request. Not admissible in combination with order code **L05**. Combination with protective cover as standard for frame sizes 100 to 200. Protective cover not possible for frame sizes 225 to 315.

17) In combination with order codes **N05**, **N06**, **N07**, **N08**, **N30**, **N31**, **D03**, **G30**, **C02**, **H20** and **H22** on request. Not admissible with order code **L05**. The type of protection of the separately driven fan must match that of the motor.

18) Cannot be combined with converter operation.

19) Vibration severity grade B not admissible in combination with converter operation (order code **B40**/**B41**).

© Siemens AG 2018

Options · Cast-iron series 1MB15 Basic Line, 1MB16 Performance Line

Selection and ordering data

Special versions **1MB15 . . - . . . . . - . . . . -Z** **1MB16 . . - . . . . . - . . . . -Z**	Additional identification code **-Z** with order code and plain text if required Order code	Frame size 71	80	90	100	112	132	160	180	200	225	250	280	315 **1MB15.3 Basic Line** **1MB16.3 Performance Line** **1MB15.1 Basic Line** **1MB16.1 Performance Line**	Motor version IEC	Ex tb (Zone 21), Ex tc (Zone 22), Ex ec (Zone 2)	IE3 IE2
Explosion-proof version																	
Version (IP55) for Zones 2 or 22, for non-conductive dust [1) 16)]	**B30**	✓	✓	✓	✓	✓	✓	✓	✓	✓	✓	✓	✓	✓	Only for:	1MB1.3. – Ex ec (Zone 2)	
Version for Zone 2 in Ex ec IIB T3 Gc	**B31**	○	○	○	○	○	○	○	○	○	○	○	○	○	Only for:	1MB1.3. – Ex ec (Zone 2)	
VIK version	**C02**	✓	✓	✓	✓	✓	✓	✓	✓	✓	✓	✓	✓	✓	Only for:	1MB1.3. – Ex ec (Zone 2)	
Version for converter operation																	
Version for converter operation in basic version with operating data SINAMICS G120 with PM240-2. [17) 20) 21) 22)]	**B40**	✓	✓	✓	✓	✓	✓	✓	✓	✓	✓	✓	✓[20)]	✓[20)]			
Version for converter operation in basic version with operating data SINAMICS S150. [17) 20) 21) 22)]	**B41**	✓	✓	✓	✓	✓	✓	✓	✓	✓	✓	✓	✓[20)]	✓[20)]			
Operating data such as order code **B40** with alternative SINAMICS converters on the rating plate [20)] • G120 with PM230 • G120 with PM240 • G120C • G120P with PM230 • G120P with PM240-2 • G120P with PM240P-2 • G120P with PM330 • G130, G150, G180 • S120 (BLM/SLM) • V20 Operating data such as order code **B41** with alternative SINAMICS converters on the rating plate [20)] • S120 (ALM)	**Y68** • and converter type	○	○	○	○	○	○	○	○	○	○	○	○	○			
Motor protection																	
1 Pt1000 resistance thermometer (2 terminals)	**Q35**	–	–	–	✓	✓	✓	✓	✓	✓	✓	✓	✓	✓			
2 Pt1000 resistance thermometers (4 terminals)	**Q36**	–	–	–	✓	✓	✓	✓	✓	✓	✓	✓	✓	✓			
2 Pt100 screw-in thermometers in basic configuration for bearings (2 terminals) [2) 3)]	**Q72**	–	–	–	–	–	–	–	✓	✓	✓	✓	✓	✓			
2 Pt100 screw-in thermometers in 3-wire input for bearing (6 terminals) [2) 3)]	**Q78**	–	–	–	–	–	–	–	✓	✓	✓	✓	✓	✓			
2 Pt100 double screw-in thermometers in 3-wire input for bearing (12 terminals) [2) 3)]	**Q79**	–	–	–	–	–	–	–	–	–	–	–	✓	✓			
Motor connection and terminal box																	
External grounding		◘	◘	◘	◘	◘	◘	◘	◘	◘	◘	◘	◘	◘			
Rotation of the terminal box through 90°, entry from DE	**R10**	○	○	○	○	○	○	○	✓	✓	✓	✓	✓	✓			
Rotation of the terminal box through 90°, entry from NDE	**R11**	○	○	○	○	○	○	○	✓	✓	✓	✓	✓	✓			
Rotation of the terminal box through 180°	**R12**	○	○	○	○	○	○	○	✓	✓	✓	✓	✓	✓			
Stud terminal for cable connection, accessories pack (3 items)	**R17**	–	–	–	–	–	–	–	–	–	–	✓	✓	✓	Only for:	1MB1.1. – Ex tb (Zone 21), 1MB1.2. – Ex tc (Zone 22)	
Metal cable gland, maximum configuration, certified according to ATEX	**R18**	✓	✓	✓	✓	✓	✓	✓	✓	✓	✓	✓	✓	✓			
Saddle terminal for connection without cable lug, accessories pack	**R19**	–	–	–	–	–	–	–	–	–	–	✓	✓	✓	Only for:	1MB1.1. – Ex tb (Zone 21), 1MB1.2. – Ex tc (Zone 22)	
		◘	◘	◘	◘	◘	◘	◘	◘	◘	◘	◘	◘	◘	Only for:	1MB1.3. – Ex ec (Zone 2)	
Larger terminal box [15)]	**R50**	✓	✓	✓	✓	✓	✓	✓	✓	✓	✓	✓	✓	✓			
Cast-iron auxiliary terminal box (small)	**R62**	–	–	–	–	–	–	–	✓	✓	✓	✓	✓	✓			

For legends and footnotes, see page 5/46.

© Siemens AG 2018

Special versions **1MB15 . . - . . . . . - . . . . -Z** **1MB16 . . - . . . . . - . . . . -Z**	Additional identification code **-Z** with order code and plain text if required Order code		Frame size 71 80 90 100 112 132 160 180 200 225 250 280 315 1MB15.3 Basic Line 1MB16.3 Performance Line 1MB15.1 Basic Line 1MB16.1 Performance Line	Motor version IEC Ex tb (Zone 21), Ex tc (Zone 22), Ex ec (Zone 2) IE3 IE2
Windings and insulation				
Temperature class 155 (F), utilized acc. to 130 (B), coolant temperature 45 °C, derating approx. 4 % [4]	**N05**		✓ ✓ ✓ ✓ ✓ ✓ ✓ ✓ ✓ ✓ ✓ ✓ ✓	
Temperature class 155 (F), utilized acc. to 130 (B), coolant temperature 50 °C, derating approx. 8 % [4]	**N06**		✓ ✓ ✓ ✓ ✓ ✓ ✓ ✓ ✓ ✓ ✓ ✓ ✓	
Temperature class 155 (F), utilized acc. to 130 (B), coolant temperature 55 °C, derating approx. 13 % [4]	**N07**		✓ ✓ ✓ ✓ ✓ ✓ ✓ ✓ ✓ ✓ ✓ ✓ ✓	
Temperature class 155 (F), utilized acc. to 130 (B), coolant temperature 60 °C, derating approx. 18 %	**N08**		✓ ✓ ✓ ✓ ✓ ✓ ✓ ✓ ✓ ✓ ✓ ✓ ✓	
Increased air humidity/temperature with 30 to 60 g water per m^3 of air	**N30**		✓ ✓ ✓ ✓ ✓ ✓ ✓ ✓ ✓ ✓ ✓ ✓ ✓	
Increased air humidity/temperature with 60 to 100 g water per m^3 of air	**N31**		✓ ✓ ✓ ✓ ✓ ✓ ✓ ✓ ✓ ✓ ✓ ✓ ✓	
Temperature class 155 (F), utilized acc. to 130 (B), with higher coolant temperature and/or installation altitude	**Y50 •** and spec. power, CT .. °C or IA …. m above sea level		✓ ✓ ✓ ✓ ✓ ✓ ✓ ✓ ✓ ✓ ✓ ✓ ✓	
Colors and paint finish				
Standard paint finish C2 in RAL 7030 stone gray			◘ ◘ ◘ ◘ ◘ ◘ ◘ ◘ ◘ ◘ ◘ ◘ ◘	Only for: 1MB15..
Unpainted (only cast-iron parts primed)	**S00**		○ ○ ○ ○ ○ ○ ○ ○ ○ ○ ○ ○ ○	
Unpainted, only primed	**S01**		✓ ✓ ✓ ✓ ✓ ✓ ✓ ✓ ✓ ✓ ✓ ✓ ✓	
Special paint finish C3	**S02**		✓ ✓ ✓ ✓ ✓ ✓ ✓ ✓ ✓ ✓ ✓ ✓ ✓	Only for: 1MB15..
			– – – ◘ ◘ ◘ ◘ ◘ ◘ ◘ ◘ ◘ ◘	Only for: 1MB16..
Special paint finish sea air resistant C4	**S03**		✓ ✓ ✓ ✓ ✓ ✓ ✓ ✓ ✓ ✓ ✓ ✓ ✓	
Special paint finish for use offshore C5	**S04**		✓ ✓ ✓ ✓ ✓ ✓ ✓ ✓ ✓ ✓ ✓ ✓ ✓	
Top coat polyurethane [12]	**S06**		✓ ✓ ✓ ✓ ✓ ✓ ✓ ✓ ✓ ✓ ✓ ✓ ✓	Only for: 1MB1.3. – Ex ec (Zone 2)
Paint finish in other standard RAL colors: RAL 1002, 1013, 1015, 1019, 2003, 2004, 3000, 3007, 5002, 5007, 5009, 5010, 5012, 5015, 5017, 5018, 5019, 6011, 6019, 6021, 7000, 7001, 7004, 7011, 7016, 7022, 7031, 7032, 7033, 7035, 9001, 9002, 9005 (see Catalog Section 1 "Introduction")	**Y53 •** and paint finish RAL ….		✓ ✓ ✓ ✓ ✓ ✓ ✓ ✓ ✓ ✓ ✓ ✓ ✓	Only for: 1MB15..
Paint finish in special RAL colors: For RAL colors, see "Special paint finish in special RAL colors" (see Catalog Section 1 "Introduction")	**Y56 •** and paint finish RAL ….		✓ ✓ ✓ ✓ ✓ ✓ ✓ ✓ ✓ ✓ ✓ ✓ ✓	
Modular technology – Basic versions				
Mounting of explosion-proof separately driven fan [19]	**F70**	*New!*	– – – – – – – – – ✓ ✓ ✓ ✓	Only for: 1MB1.1. – Ex tb (Zone 21)
			– – – ✓ ✓ ✓ ✓ ✓ ✓ ✓ ✓ ✓ ✓	Only for: 1MB1.2. – Ex tc (Zone 22)
			– – – ✓ ✓ ✓ ✓ ✓ ✓ ✓ ✓ ✓ ✓	Only for: 1MB1.3. – Ex ec (Zone 2)
Special technology				
Mounting of explosion-proof rotary pulse encoder for use in Zones 2, 21 and 22 [18]	**G30**	*New!*	– – – ✓ ✓ ✓ ✓ ✓ ✓ ✓ ✓ ✓ ✓	

For legends and footnotes, see page 5/46.

© Siemens AG 2018

Article No. supplements and special versions
SIMOTICS XP 1MB1 explosion-proof motors

Options · Cast-iron series 1MB15 Basic Line, 1MB16 Performance Line

Special versions	Additional identification code **-Z** with order code and plain text if required		Frame size 71	80	90	100	112	132	160	180	200	225	250	280	315	Motor version		
			1MB15.3 Basic Line													IEC	Ex tb (Zone 21), Ex tc (Zone 22), Ex ec (Zone 2)	IE3
						1MB16.3 Performance Line												
1MB15 . . - . . . . . - . . . . -Z			1MB15.1 Basic Line															IE2
1MB16 . . - . . . . . - . . . . -Z	Order code					1MB16.1 Performance Line												
Mechanical version and degrees of protection																		
Low-noise version for 2-pole motors with clockwise direction of rotation	**F77**		–	–	–	–	–	✓	✓	✓	✓	✓	✓	✓	✓			
Low-noise version for 2-pole motors with counterclockwise direction of rotation	**F78**		–	–	–	–	–	✓	✓	✓	✓	✓	✓	✓	✓			
Mechanical protection for encoder	**G43**		–	–	–	□	□	□	□	□	□	✓	✓	✓	✓			
Protective cover	**H00**		✓	✓	✓	✓	✓	✓	✓	✓	✓	✓	✓	✓	✓			
Vibration-proof version; vibration resistance to Class 3M4 according to IEC 60721-3-3:1994	**H02**		✓	✓	✓	✓	✓	✓	✓	✓	✓	✓	✓	✓	✓			
Condensation drainage holes [7]	**H03**		✓	✓	✓	□	□	□	□	□	□	□	□	□	□			
Rust-resistant screws (externally)	**H07**		✓	✓	✓	✓	✓	✓	✓	✓	✓	✓	✓	✓	✓			
Degree of protection IP65 [5]	**H20**		✓	✓	✓	✓	✓	✓	✓	✓	✓	✓	✓	✓	✓	Only for:	1MB1.3. – Ex ec (Zone 2)	
Degree of protection IP56 [6]	**H22**		✓	✓	✓	✓	✓	✓	✓	✓	✓	✓	✓	✓	✓	Only for:	1MB1.3. – Ex ec (Zone 2)	
Drive-end seal for flange-mounting motors, oil-tight to 0.1 bar Not possible for type of construction IM V3	**H23**		✓	✓	✓	✓	✓	✓	✓	✓	✓	✓	✓	✓	✓			
Coolant temperature and installation altitude																		
Coolant temperature –40 °C to +40 °C	**D03**		✓	✓	✓	✓	✓	✓	✓	✓	✓	✓	✓	✓	✓			
Versions in accordance with standards and specifications																		
Ex certification for China	**D32**	*New!*	✓	✓	✓	✓	✓	✓	✓	✓	✓	✓	✓	✓	✓	Only for:	1MB15..	
			–	–	–	✓	✓	✓	✓	✓	✓	✓	✓	✓	✓	Only for:	1MB16..	
China Energy Efficiency Label	**D34**	*New!*	○	○	○	○	○	○	○	○	○	○	○	○	○	Only for:	1MB15..	
			–	–	–	○	○	○	○	○	○	○	○	○	○	Only for:	1MB16..	
EAC Ex certificate for the Eurasian customs union [13]	**D35**		–	–	–	✓	✓	✓	✓	✓	✓	✓	✓	✓	✓			
IEC Ex certification	**D37**		✓	✓	✓	✓	✓	✓	✓	✓	✓	✓	✓	✓	✓			
Bearings and lubrication																		
Regreasing device with M10 ×1 grease nipple according to DIN 71412-A	**L19**		–	–	–	–	–	–	–	✓	✓	✓	✓	○	○			
Located bearing DE	**L20**		✓	✓	✓	✓	✓	✓	✓	✓	✓	✓	✓	✓	✓			
Located bearing NDE	**L21**		✓	✓	✓	✓	✓	✓	□	□	□	□	□	□	□			
Bearing design for increased cantilever forces [14]	**L22**		✓	✓	✓	✓	✓	✓	✓	✓	✓	✓	✓	✓	✓			
Regreasing device	**L23**		–	–	–	✓	✓	✓	✓	✓	✓	✓	✓	□	□	Only for:	1MB15..	
			–	–	–	✓	✓	✓	□	□	□	□	□	□	□	Only for:	1MB16..	
Bearings reinforced at both ends for DE and NDE, bearing size 63	**L25**		✓	✓	✓	✓	✓	✓	✓	✓	✓	✓	✓	□	□	Only for:	1MB15..	
			–	–	–	□	□	□	□	□	□	□	□	□	□	Only for:	1MB16..	
Bearing insulation NDE [20]	**L51**		–	–	–	✓	✓	✓	✓	✓	✓	✓	✓	✓[20]	✓[20]			
Measuring nipple for SPM shock pulse measurement for bearing inspection	**Q01**		✓	✓	✓	✓	✓	✓	✓	✓	✓	✓	✓	✓	✓			
Balance and vibration severity																		
Vibration severity grade A [21]			□	□	□	□	□	□	□	□	□	□	□	□	□			
Vibration severity grade B [21] [22] [23]	**L00**		✓	✓	✓	✓	✓	✓	✓	✓	✓	✓	✓	✓	✓			
Half-key balancing			□	□	□	□	□	□	□	□	□	□	□	□	□			
Balancing without feather key	**L01**		✓	✓	✓	✓	✓	✓	✓	✓	✓	✓	✓	✓	✓			
Full-key balancing	**L02**		✓	✓	✓	✓	✓	✓	✓	✓	✓	✓	✓	✓	✓			

For legends and footnotes, see page 5/46.

© Siemens AG 2018

Options · Cast-iron series 1MB15 Basic Line, 1MB16 Performance Line

Special versions **1MB15 . . - . . . . . - . . . . -Z** **1MB16 . . - . . . . . - . . . . -Z**	Additional identification code **-Z** with order code and plain text if required Order code		Frame size 71	80	90	100	112	132	160	180	200	225	250	280	315 1MB15.3 Basic Line 1MB16.3 Performance Line 1MB15.1 Basic Line 1MB16.1 Performance Line	Motor version IEC	Ex tb (Zone 21), Ex tc (Zone 22), Ex ec (Zone 2)	IE3 IE2
Shaft and rotor																		
Shaft extension with standard dimensions, without feather keyway	**L04**		–	–	–	✓	✓	✓	✓	✓	✓	✓	✓	✓	✓			
Standard, cylindrical shaft extension (second shaft extension) NDE acc. to EN 50347	**L05**		✓	✓	✓	✓	✓	✓	✓	✓	✓	✓	✓	✓	✓			
Standard shaft made of stainless steel (e.g. 1.4021)	**L06**		✓	✓	✓	✓	✓	✓	✓	✓	✓	✓	✓	✓	✓			
Concentricity of shaft extension in accordance with DIN 42955 Tolerance R	**L07**		✓	✓	✓	✓	✓	✓	✓	✓	✓	✓	✓	✓	✓			
Concentricity of shaft extension, coaxiality and linear movement in accordance with DIN 42955 Tolerance R for flange-mounted motors	**L08**		✓	✓	✓	✓	✓	✓	✓	✓	✓	✓	✓	✓	✓			
Non-standard cylindrical shaft extension DE [8]	**Y58 •** and customer specifications		✓	✓	✓	✓	✓	✓	✓	✓	✓	✓	✓	✓	✓			
Non-standard cylindrical shaft extension NDE [8]	**Y59 •** and customer specifications		✓	✓	✓	✓	✓	✓	✓	✓	✓	✓	✓	✓	✓			
Heating and ventilation																		
Metal external fan [9]	**F76**		✓	✓	✓	✓	✓	✓	✓	✓	✓	✓	✓	✓	✓	Only for:	1MB1.3. – Ex ec (Zone 2)	
Anti-condensation heating for 230 V (2 terminals) [3]	**Q02**		✓	✓	✓	✓	✓	✓	✓	✓	✓	✓	✓	✓	✓			
Anti-condensation heating for 115 V (2 terminals) [3]	**Q03**		✓	✓	✓	✓	✓	✓	✓	✓	✓	✓	✓	✓	✓			
Rating plate and additional rating plates																		
Second rating plate, loose	**M10**		✓	✓	✓	✓	✓	✓	✓	✓	✓	✓	✓	✓	✓			
Rating plate, stainless steel	**M11**		✓	✓	✓	✓	✓	✓	✓	✓	✓	□	□	□	□	Only for:	1MB15..	
			–	–	–	□	□	□	□	□	□	□	□	□	□	Only for:	1MB16..	
Additional rating plate with deviating rating plate data	**Y80 •** and customer specifications		✓	✓	✓	✓	✓	✓	✓	✓	✓	✓	✓	✓	✓			
Additional rating plate with customer specifications	**Y82 •** and customer specifications		✓	✓	✓	✓	✓	✓	✓	✓	✓	✓	✓	✓	✓			
Additional information on rating plate and on package label (max. 20 characters)	**Y84 •** and customer specifications		✓	✓	✓	✓	✓	✓	✓	✓	✓	✓	✓	✓	✓			
Packaging, safety notes, documentation and test certificates																		
Printed Operating Instructions (Compact) for explosion-proof motors enclosed in English and German [11]			□	□	□	□	□	□	□	□	□	□	□	□	□			
Acceptance test certificate 3.1 according to EN 10204 [10]	**B02**		✓	✓	✓	✓	✓	✓	✓	✓	✓	✓	✓	✓	✓			
Printed German/English Operating Instructions enclosed	**B04**		–	–	–	✓	✓	✓	✓	✓	✓	✓	✓	✓	✓			
Type test with heat run for horizontal motors, with acceptance	**B83**		✓	✓	✓	✓	✓	✓	✓	✓	✓	✓	✓	✓	✓			
"Basic" documentation package	**B90**	*New!*	✓	✓	✓	✓	✓	✓	✓	✓	✓	✓	✓	✓	✓			
"Advanced" documentation package	**B91**	*New!*	✓	✓	✓	✓	✓	✓	✓	✓	✓	✓	✓	✓	✓			
"Projects" documentation package	**B92**	*New!*	✓	✓	✓	✓	✓	✓	✓	✓	✓	✓	✓	✓	✓			
Wire-lattice pallet packaging	**B99**		○	○	○	○	○	○	○	–	–	–	–	–	–			
Connected in star for shipping	**M01**		✓	✓	✓	✓	✓	✓	✓	✓	✓	✓	✓	✓	✓			
Connected in delta for dispatch	**M02**		✓	✓	✓	✓	✓	✓	✓	✓	✓	□	□	□	□			
Printed Operating Instructions (Compact) for explosion-proof motors enclosed in other official EU languages [11]	**Y98 •** and customer specifications		✓	✓	✓	✓	✓	✓	✓	✓	✓	✓	✓	✓	✓			

For legends and footnotes, see page 5/46.

© Siemens AG 2018

Options · Cast-iron series 1MB15 Basic Line, 1MB16 Performance Line

- ◘ Standard version
- ○ Without additional charge
- • This order code only determines the price of the version – Additional plain text is required.
- ✓ With additional charge
- – Not possible

1) Please inquire regarding combination with order codes D03 and C02. Not possible in combination with order codes **H20** and **H22**.

2) Evaluation with associated tripping unit (see Catalog IC 10) is recommended. A certified tripping unit is necessary for use in hazardous areas.

3) In combination with the 15th position of the Article No. "**H**", the order codes **Q02** and **Q03** are not possible for frame sizes 100 to 160. It can only be supplied with a star or delta winding for direct switch-on (3 terminals).

4) There is no derating in combination with order codes **M2A**, **M2B**, **M2C**, **M2D**, **M2E**, **M2F**, **M2G**, **M2H**.

5) Order code **H20** (IP65 degree of protection) can only be ordered for Zone 2. For Zone 21, IP65 degree of protection is standard. Not possible for Zone 22, because only IP55 degree of protection is required.

6) Order code **H22** IP56 degree of protection is only possible for Zone 2. Degree of protection IP56 is not permissible for Zone 21 (IP65 degree of protection) and Zone 22 (IP55 degree of protection).

7) Supplied with the condensation drainage holes sealed at the drive end DE and non-drive end NDE (IP55, IP56, IP65). If the condensation drainage holes are required for motors of the IM B6, IM B7 or IM B8 type of construction (feet on side or top), the motors must be ordered in the respective type of construction and with order code **H03**, so that the condensation drainage holes will be placed in the correct position.

8) When motors are ordered that have a longer or shorter shaft extension than normal, the required position and length of the feather keyway must be specified in a sketch. It must be ensured that only feather keys in accordance with DIN 6885, Form A are permitted to be used. The feather keyway is positioned centrally on the shaft extension. The length is defined by the manufacturer in accordance with the appropriate standard. Not valid for: Conical shafts, non-standard threaded journals, non-standard shaft tolerances, friction welded journals, extremely "thin" shafts, special geometry dimensions (e.g. square journals), hollow shafts. Valid for non-standard shaft extensions DE or NDE. The feather keys are supplied in every case.
For order codes **Y58**, **Y59** and **L05** the following applies:
– Dimensions D and DA ≤ ball bearing inner diameter (see dimension tables in "Dimensions")
– Dimensions E and EA ≤ 2 × length E (standard) of the shaft extension
For an explanation of the order codes, see Catalog Section 1 "Introduction".

9) The metal external fan is not possible in combination with the low-noise version – order code **F77** or **F78**.

10) The delivery time for the factory test certificate may differ from the delivery time for the motor.

11) The Operating Instructions (Compact) are available in PDF format for all official EU languages at
http://support.automation.siemens.com/WW/view/en/10803948/133300

12) Order code **S06** cannot be combined with order code **S00**, **S01** and **S02**. It can be combined with **Y53** and **Y56** on request.

13) Available soon: Explosion protection type Ex tb (Zone 21) for 1MB15 in frame sizes 71 to 90 and for 1MB15/6 in frame sizes 225 to 315); version for converter operation for 1MB15/6 in frame sizes 71 to 315.

14) A minimum cantilever force F_{min} of 0.5 · F_{max} is required for NU bearings (cylindrical roller bearings) in contrast to ball bearings. Cylindrical roller bearings are not suitable for coupling output or for brief periods of no-load operation without cantilever force.

15) Standard version in combination with the order code **Q02**, **Q03** and/or 15th position of the Article No. "**H**" for frame sizes 71 to 90.

16) The Ex motor is not admissible in an explosive atmosphere of dust and air (hybrid). A standard is not currently available that describes the product requirements for a hybrid mixture.

17) In combination with order codes **B40** and **B41**, "B" or "C" must be added to the 15th position of the Article No. . For compliance with the admissible temperature class 130 (B), derating is necessary in the case of converter operation in Zones 2, 21 and 22. The operating data for SINAMICS converters from Siemens are on the rating plate – the torque is reduced in contrast to line operation. The motor operating data for converter operation is available in the DTC selection and ordering tool. For converter operation, voltage codes/order codes are only admissible with one voltage only. When used in hazardous zones, the frequency converter must have a certified trip unit for motors of device category 1 (Zone 21). A certified trip unit is also recommended for motors of device category 3 (Zones 2 and 22). Alternatively, an external, certified trip unit can be used (see Catalog IC 10).

18) Can be combined with order codes **N30**, **N31**, **L51** and **F70** on request. Not admissible in combination with order code **L05**. Combination with protective cover as standard for FS 100 to 200. Protective cover not possible for FS 225 to 315.

19) In combination with order codes **N05**, **N06**, **N07**, **N08**, **N30**, **N31**, **D03**, **G30**, **C02**, **H20** and **H22** on request. Not admissible with order code **L05**. The type of protection of the separately driven fan must match that of the motor.

20) The frame sizes 280 and 315 in combination with order code **B40** or **B41** are equipped with "Bearing insulation NDE" as standard (order code **L51** is included in **B40**/**B41**).

21) Not admissible for frame size 315, 2-pole. An exception is elastic installation (please inquire).

22) Not admissible in combination with converter operation (order code **B40**, **B41**).

23) On request for 2-pole motors (concerns frame sizes 225 to 315).

© Siemens AG 2018

Overview

Couplings for use in hazardous areas

The motor from Siemens is connected to the machine or gear unit through a coupling. Siemens is an important coupling manufacturer with a wide range of products.

For standard applications, Siemens recommends that flexible couplings, types N-EUPEX and RUPEX or torsionally rigid couplings, types ARPEX and ZAPEX are used. For special applications, FLUDEX and ELPEX-S couplings are recommended. These coupling types are suitable for use in areas subject to explosion hazards and are offered with declaration of conformity and type test certificate according to Directive 94/9/EC.

Available from:

Siemens contact partner - ordering from catalog
Siemens MD 10.1 "FLENDER Standard Couplings"

or

Siemens AG
Kupplungswerk Mussum
Industriepark Bocholt
Schlavenhorst 100
46395 Bocholt, Germany
Phone +49 2871 922185
Fax +49 2871 922579

www.siemens.com
Email: flendercouplings@siemens.com

Taper pins according to DIN 258 with threaded ends and constant taper lengths

Taper pins are used for components that are repeatedly removed. The drilled hole is conically ground using a conical reamer until the pin can be pushed in by hand until the cone shoulder lies approx. 3 to 4 mm above the rim of the hole.

It can then be driven in using a hammer until it is correctly seated. The pin is removed from the drilled hole by screwing on the nut and tightening it.

Standardized taper pins are commercially available.

For instance, available from:

Otto Roth GmbH & Co. KG
Rutesheimer Strasse 22
70499 Stuttgart, Germany
Tel. +49 711 1388-0
Fax. +49 711 1388-233

www.ottoroth.de
Email: info@ottoroth.de

Foundation block according to DIN 799

The foundation blocks are inserted into the stone foundation and embedded in concrete. They are used for fixing machines of medium size, slide rails, pedestal bearings, base frames, etc. After the fixing bolts have been unscrewed, the machines can be shifted without them having to be lifted.

When the machine is initially installed, the foundation block that is bolted to the machine (without washers) and fitted with taper pins is not embedded with concrete until the machine has been fully aligned. In this case, the machine is positioned 2 to 3 mm lower. The difference in shaft height is compensated by inserting shims on final installation. The taper pins safeguard the exact position of the machine when it is repeatedly removed and replaced without the need for realignment.

Available from:

Lütgert & Co. GmbH
Postfach 42 51
33276 Gütersloh, Germany
Phone +49 5241 7407-0
Fax +49 5241 7407-90

www.luetgert-antriebe.de
Email: info@luetgert-antriebe.de

Slide rails with fixing bolts and tensioning screws according to DIN 42923

Slide rails are used to tension the belt of a machine easily and conveniently when there is no belt-tensioning pulley. They are fixed to the base using stone bolts or foundation blocks.

The assignment of slide rails to motor size can be found in DIN 42923. For motors of frame sizes 355 to 450, there are no standardized slide rails (please inquire).

Available from:

Lütgert & Co. GmbH
Postfach 42 51
33276 Gütersloh, Germany
Phone +49 5241 7407-0
Fax +49 5241 7407-90

www.luetgert-antriebe.de
Email: info@luetgert-antriebe.de

More information

Replacement motors and repair parts

- Commitment to provide replacement motors and repair parts following delivery of the motor:
  - For up to 3 years after the delivery of the original motor, in the event of total motor failure – with regard to the mounting dimensions and functions – Siemens will supply a comparable replacement motor (the type series may vary).
  - If a spare motor is supplied within the 3-year period, this does not mean that the warranty restarts.
  - Replacement motors delivered after the active production of the machine series are also identified as spare motors on the rating plate.
  - Spare parts are offered only for these spare motors on request; repair and replacement are not possible.
  - After a period of 3 years (after the delivery of the original motor), it is only possible to repair these motors (depending on the availability of the spare parts required).
  - For up to 5 years after the delivery of the original motor, spare parts will be available and for a further 5 years, Siemens will provide information about spare parts and will supply documents when required.
- When repair parts are ordered, the following details must be provided:
  - Designation and part number
  - Article No. and factory number of the motor.
- For bearing types, see Catalog Section 1 "Introduction".
- Repair parts are available for 1MB1 motors on request.
- For standard components, a commitment to supply repaired parts does not apply.
- Support hotline
  In Germany
  Phone +49 911 895 7 222

You will find telephone numbers for other countries on our Internet site:
www.siemens.com/automation/service&support

© Siemens AG 2018

Overall dimensions

Overview

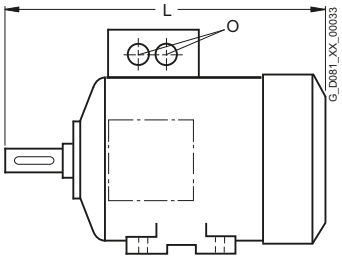

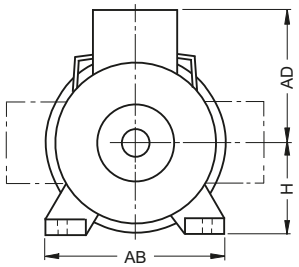

Frame size	Type	Dimension L	AD	H	AB	O
71 M	Cast-iron series, self-ventilated 1MB15..-					
	0CA2, 0CB2, 0CC2, 0CD2	240	149	71	132	1 × M16 × 1.5
	0CA3, 0CB3, 0CC3, 0CD3	280				1 × M25 × 1.5
80 M	Aluminum series, self-ventilated, 1MB101, 1MB102 1MB103					
		292	149	80	150	1 × M16 × 1.5
						1 × M25 × 1.5
	Cast-iron series, self-ventilated 1MB15..-					
	0DA2, 0DB2, 0DC2, 0DD2	292	159	80	150	1 × M16 × 1.5
	0DA3, 0DB3, 0DC3, 0DD3	327				1 × M25 × 1.5
90 S/L	Aluminum series, self-ventilated, 1MB101, 1MB102, 1MB103					
		347	154	90	165	1 × M16 × 1.5
						1 × M25 × 1.5
	Cast-iron series, self-ventilated 1MB15..-					
	0EA0, 0EB0, 0EC0, 0ED0	347	164	90	165	1 × M16 × 1.5
	0EA4, 0EB4, 0EC4, 0ED4	387				1 × M25 × 1.5
100 L	Aluminum series, self-ventilated					
	1MB1011, 1MB1012, 1MB1021, 1MB1022, 1MB1031, 1MB1032	395.5[1)]	166	100	196	2 × M32 × 1.5
	1MB1013, 1MB1023, 1MB1033	430.5[1)]				
	Cast-iron series, self-ventilated 1MB15.., 1MB16..					
		389	193	100	196	2 × M32 × 1.5
112 M	Aluminum series, self-ventilated					
	1MB1011, 1MB1012, 1MB1021, 1MB1022, 1MB1031, 1MB1032	389[1)]	177	112	226	2 × M32 × 1.5
	1MB1013, 1MB1023, 1MB1033	414[1)]				
	Cast-iron series, self-ventilated 1MB15.., 1MB16..					
		382	195	112	226	2 × M32 × 1.5
132 S/ 132 M	Aluminum series, self-ventilated					
	1MB1011, 1MB1012, 1MB1021, 1MB1022, 1MB1031, 1MB1032	465[1)]	202	132	256	2 × M32 × 1.5
	1MB1013-, 1MB1023-, 1MB1033-					
	1CA0, 1CC0, 1CC2	465[1)]				
	1CA1, 1CB0, 1CB2, 1CC3	515[1)]				
	Cast-iron series, self-ventilated 1MB15.., 1MB16..					
		457	215	132	256	2 × M32 × 1.5
160 M/ 160 L	Aluminum series, self-ventilated					
	1MB1011, 1MB1012, 1MB1021, 1MB1022, 1MB1031, 1MB1032	604[1)]	236	160	300	2 × M40 × 1.5
	1MB1013, 1MB1023, 1MB1033		.5			
	Cast-iron series, self-ventilated 1MB15.., 1MB16..					
		594	265	160	300	2 × M40 × 1.5
180 M	Cast-iron series, self-ventilated 1MB15.1-, 1MB16.1-					
	1EA2, 1EB2		668	180	339	2 × M40 × 1.5
	1EA6		698			
	Cast-iron series, self-ventilated 1MB15.3-, 1MB16.3-					
	1EB2		668	180	339	2 × M40 × 1.5
	1EA2		698			
180 L	Cast-iron series, self-ventilated 1MB15.1-, 1MB16.1-					
	1EB4, 1EC4, 1EC6		668	180	339	2 × M40 × 1.5
	1EB6		698			
	Cast-iron series, self-ventilated 1MB15.3-, 1MB16.3-					
	1EC4		668	180	339	2 × M40 × 1.5
	1EB4		698			

Frame size	Type	Dimension L	AD	H	AB	O
200 L	Cast-iron series, self-ventilated 1MB15.1-, 1MB16.1-					
	2AA4, 2AA5, 2AB5, 2AC4, 2AC5	721	315	200	378	2 × M50 × 1.5
	2AA6	746				
	Cast-iron series, self-ventilated 1MB15.3-, 1MB16.3-					
	2AA4, 2AC4	721	315	200	378	2 × M50 × 1.5
	2AA5, 2AB5, 2AC5	746				
225 S	Cast-iron series, self-ventilated 1MB15.1-, 1MB16.1-					
	2BB0, 2BD0	788	338	225	436	2 × M50 × 1.5
	Cast-iron series, self-ventilated 1MB15.3-, 1MB16.3-					
	2BB0	788	338	225	436	2 × M50 × 1.5
225 M	Cast-iron series, self-ventilated 1MB15.1-, 1MB16.1-					
	2BA2, 2BA6	818	338	225	436	2 × M50 × 1.5
	2BB2, 2BB6, 2BC2, 2BC6, 2BD6	848				
	Cast-iron series, self-ventilated 1MB15.3-, 1MB16.3-					
	2BA2	818	338	225	436	2 × M50 × 1.5
	2BB2, 2BC2	848				
250 M	Cast-iron series, self-ventilated 1MB15.1-, 1MB16.1-					
	2CA2, 2CA6, 2CB2, 2CC2, 2CC6, 2CD2, 2CD6	887	410	250	490	2 × M63 × 1.5
	2CB6	957				
	Cast-iron series, self-ventilated 1MB15.3-, 1MB16.3-					
	2CA2, 2CB2, 2CC2	887	410	250	490	2 × M63 × 1.5
280 S	Cast-iron series, self-ventilated 1MB15.1-, 1MB16.1-					
	2DA0, 2DB0, 2DC0, 2DD0	960	433	280	540	2 × M63 × 1.5
	Cast-iron series, self-ventilated 1MB15.3-, 1MB16.3-					
	2DA0, 2DB0, 2DC0	960	433	280	540	2 × M63 × 1.5
280 M	Cast-iron series, self-ventilated 1MB15.1-, 1MB16.1-					
	2DA2, 2DB2, 2DC2, 2DC6, 2DD2, 2DD6	960	433	280	540	2 × M63 × 1.5
	2DA6, 2DB6	1070				
	Cast-iron series, self-ventilated 1MB15.3-, 1MB16.3-					
	2DC2	960	433	280	540	2 × M63 × 1.5
	2DA2, 2DB2	1070				
315 S	Cast-iron series, self-ventilated 1MB15.1-, 1MB16.1-					
	3AA0	1052	515	315	610	2 × M63 × 1.5
	3AB0, 3AC0, 3AD0	1082				
	Cast-iron series, self-ventilated 1MB15.3-, 1MB16.3-					
	3AA0	1052	515	315	610	2 × M63 × 1.5
	3AB0, 3AC0	1082				
315 M	Cast-iron series, self-ventilated 1MB15.1-, 1MB16.1-					
	3AC2, 3AD2	1082	515	315	610	2 × M63 × 1.5
	3AA2	1217				
	3AB2	1247				
	Cast-iron series, self-ventilated 1MB15.3-, 1MB16.3-					
	3AA2	1217	515	315	610	2 × M63 × 1.5
	3AB2, 3AC2	1247				
315 L	Cast-iron series, self-ventilated 1MB15.1-, 1MB16.1-					
	3AA4	1217	515	315	610	2 × M63 × 1.5
	3AB4, 3AC4, 3AC5, 3AD4, 3AD5, 3AD6	1247				
	3AA5, 3AA6	1372				
	3AB5, 3AB6, 3AC6	1402				
	Cast-iron series, self-ventilated 1MB15.3-, 1MB16.3-					
	3AA4	1217	515	315	610	2 × M63 × 1.5
	3AB4, 3AC4	1247				
	3AA5	1372				
	3AB5, 3AC5, 3AC6	1402				

© Siemens AG 2018

Overview

Notes on the dimensions

- Dimensional drawings according to EN 50347 and IEC 60072.
- Fits
  The shaft extensions specified in the dimension tables (DIN 748) and centering spigot diameters (EN 50347) are machined with the following fits:

Dimension designation	ISO fit DIN ISO 286-2	
D, DA	to 30 over 30 to 50 over 50	j6 k6 m6
N	to 250 over 250	j6 h6
F, FA		h9
K		H17
S	flange (FF)	H17

  The drilled holes of couplings and belt pulleys should have an ISO fit of at least H7.

- Dimension tolerances
  For the following dimension designations, the admissible deviations are given below:

Dimension designation	Dimension	Admissible deviation
H	to 250 over 250	– 0.5 – 1.0
E, EA		– 0.5

  Keyways and feather keyways (dimensions GA, GC, F and FA) are made in compliance with DIN 6885 Part 1.
- All dimensions are specified in mm.

Dimension sheet generator

(within the Drive Technology Configurator)

A dimensional drawing can be created in the Drive Technology (DT) Configurator for every configurable motor. A dimensional drawing can be requested for every other motor.

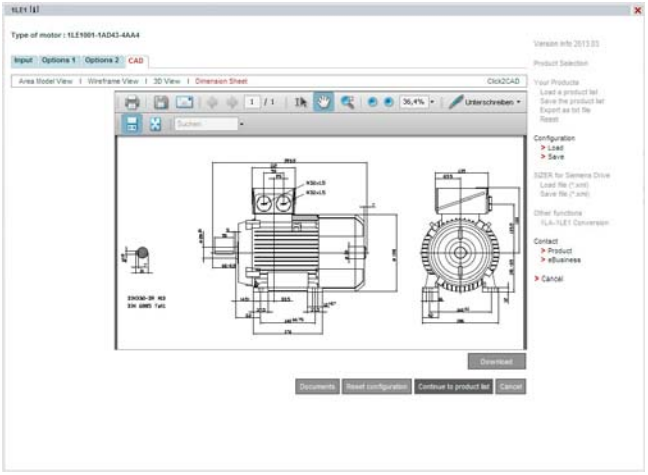

When a complete Article No. is entered with or without order codes, a dimensional drawing can be called up under the "Documentation" tab.

These dimensional drawings can be presented in different views and sections and printed.
The corresponding dimension sheets can be exported, saved and processed further in DXF format (interchange/import format for CAD systems) or as bitmap graphics.

Online access in the Siemens Industry Mall

The "DT Configurator" is integrated into the Siemens Industry Mall and can be used on the Internet without installation.
German: www.siemens.de/dt-konfigurator
English: www.siemens.com/dt-configurator

Offline access in the Interactive Catalog CA 01

The "DT Configurator" is also integrated on the DVD of the Interactive Catalog CA 01 – the offline version of Siemens Industry Mall. CA 01 can be ordered from the relevant Siemens sales office or via the Internet:
www.siemens.com/automation/CA01

© Siemens AG 2018

Dimensional drawings

Type of construction IM B3

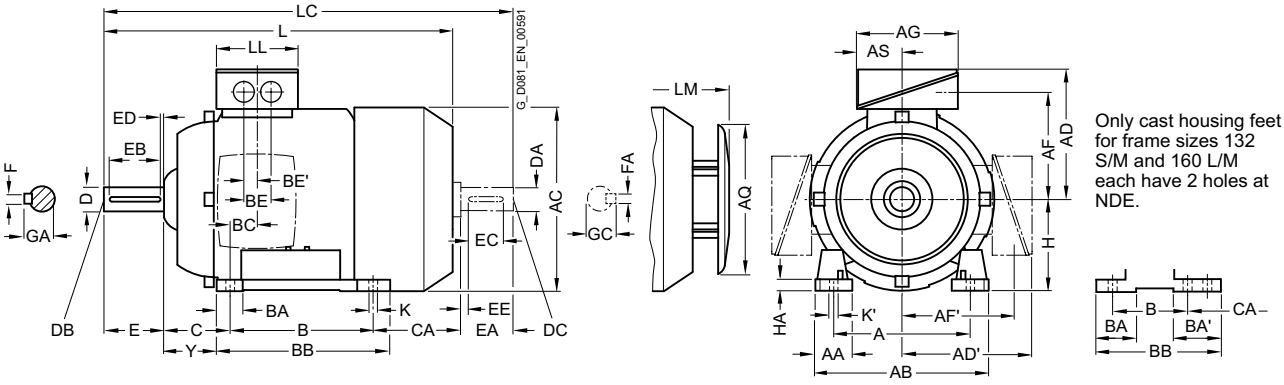

Only cast housing feet for frame sizes 132 S/M and 160 L/M each have 2 holes at NDE.

Types of construction IM B5 and IM V1

For flange dimensions, see page 1/53 (**Z** = the number of retaining holes)

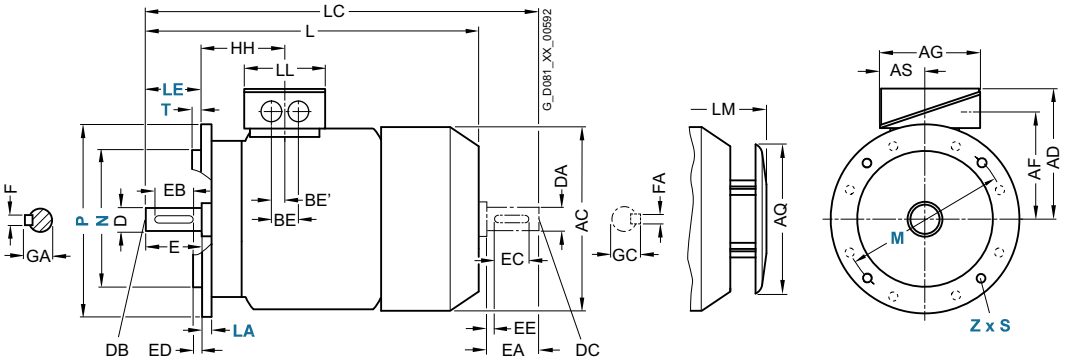

For motor			Dimension designation acc. to **IEC**																						
Frame size	Motor type 1MB10.3-	No. of poles	A	AA	AB	AC	AD	AD'	AF	AF'	AG	AQ	AS	B	BA	BA'	BB	BC	BE	BE'	C	CA	H	HA	Y
80 M	0DA2, 0DB2, 0DC3	2, 4, 6	125	30.5	150	159	121	121	96.5	96.5	93	155	43	100	32	32	118	23	36	18	50	113	80	8	41
	0DA3, 0DB3, 0DC3																								
90 S	All	2, 4, 6	140	30.5	165	178	126	126	101.5	101.5	93	155	43	100	33	33	143	22.5	36	18	56	159	90	10	47
90 L	All	2, 4, 6	140	30.5	165	178	126	126	101.5	101.5	93	155	43	125	33	33	143	22.5	36	18	56	199	90	10	47
100 L	All	2, 4	160	42	196	198	166	166	125.5	125.5	135	195	63.5	140	37.5	–	176	33.5	50	25	63	176	100	12	45
112 M	All	2, 4	190	46	226	222	177	177	136.5	136.5	135	195	63.5	140	35.4	–	176	26	50	25	70	155	112	12	52
132 S	1CA0, 1CC0	2, 6	216	53	256	262	202	202	159.5	159.5	155	260	70.5	140	38	76	218	26.5	48	24	89	128.5	132	15	69
	1CA1, 1CB0	2, 4																				178.5			
132 M	1CC2	6	216	53	256	262	202	202	159.5	159.5	155	260	70.5	178	38	76	218	26.5	48	24	89	128.5	132	15	69
	1CB2, 1CC3	4, 6																				178.5			
160 M	All	2, 4, 6	254	60	300	314	236.5	236.5	190	190	175	260	77.5	210	44	89	300	47	57	28.5	108	148	160	18	85
160 L	All	2, 4, 6	254	60	300	314	236.5	236.5	190	190	175	260	77.5	254	44	–	300	47	57	28.5	108	208	160	18	85

[1] With screwed-on feet, dimension BA' is 43 mm.
[2] With screwed-on feet, dimension BB is 180 mm.
[3] With screwed-on feet, dimension BA' is 51 mm.
[4] With screwed-on feet, dimension BB is 256 mm.

© Siemens AG 2018

Dimensional drawings (continued)

Type of construction IM B35

For flange dimensions, see page 1/53 (**Z** = the number of retaining holes)

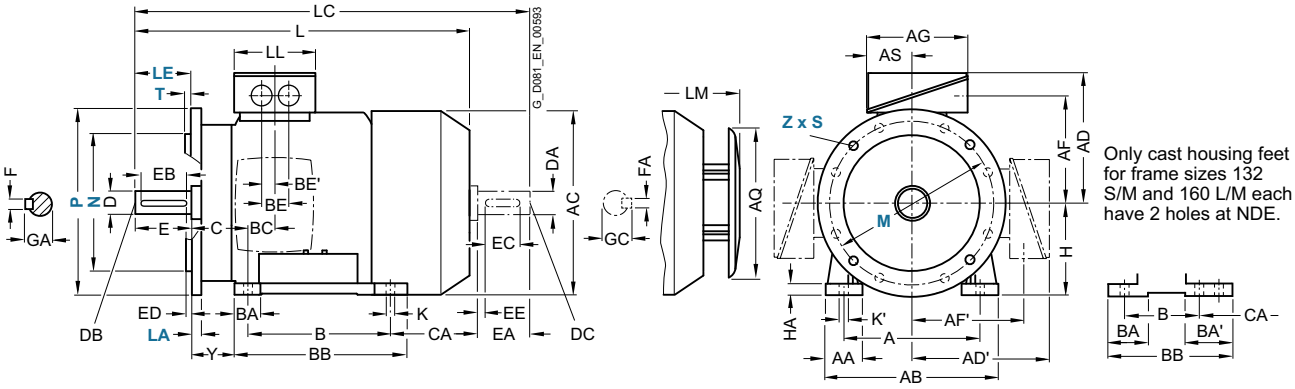

Type of construction IM B14

For flange dimensions, see page 1/53 (**Z** = the number of retaining holes)

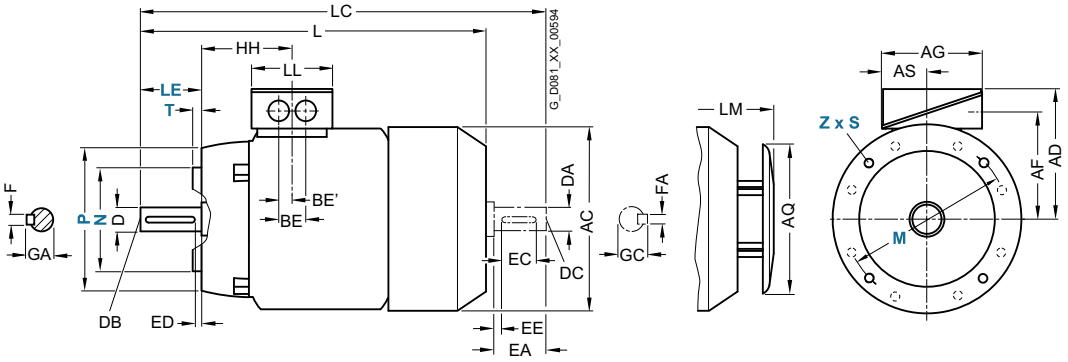

For motor			Dimension designation acc. to **IEC**							DE shaft extension							NDE shaft extension						
Frame size	Motor type 1MB10.3-	No. of poles	HH	K	K'	L	LC	LL	LM	D	DB	E	EB	ED	F	GA	DA	DC	EA	EC	EE	FA	GC
80 M	0DA2, 0DB2, 0DC3	2, 4, 6	73	9.5	13.5	292	343	79	328	19	M6	40	32	4	6	21.5	19	M6	40	32	4	6	21.5
	0DA3, 0DB3, 0DC3					327																	
90 S	All	2, 4, 6	78.5	10	14	347	405	79	383	24	M8	50	40	5	8	27	19	M6	40	32	4	6	21.5
90 L	All	2, 4, 6	78.5	10	14	387	445	79	383	24	M8	50	40	5	8	27	19	M6	40	32	4	6	21.5
100 L	All	2, 4	100.5	12	16	418	489	112	463.5	28	M10	60	50	5	8	31	24	M8	50	40	5	8	27
112 M	All	2, 4	100.5	12	16	401	475	112	447	28	M10	60	50	5	8	31	24	M8	50	40	5	8	27
132 S	1CA0, 1CC0	2, 6	115.5	12	16	449.5	535.5	130	516.5	38	M12	80	70	5	10	41	28	M10	60	50	5	8	31
	1CA1, 1CB0	2, 4				499.5	585.5		550.5														
132 M	1CC2	6	115.5	12	16	449.5	535.5	130	516.5	38	M12	80	70	5	10	41	28	M10	60	50	5	8	31
	1CB2, 1CC3	4, 6				499.5	585.5		550.5														
160 M	All	2, 4, 6	145	15	19	586	730	145	654	42	M16	110	90	10	12	45	42	M16	110	90	10	12	45
160 L	All	2, 4, 6	145	15	19	646	790	145	714	42	M16	110	90	10	12	45	42	M16	110	90	10	12	45

© Siemens AG 2018

Dimensional drawings

Type of construction IM B3

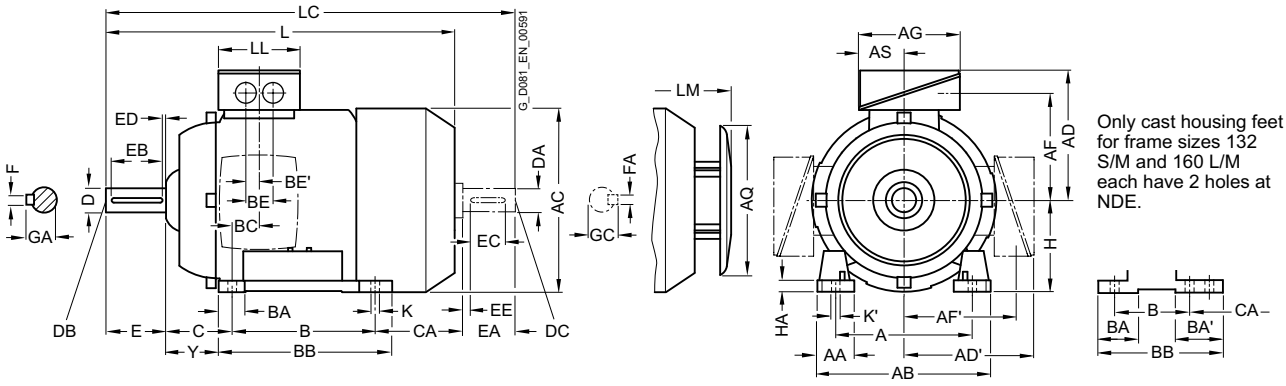

Only cast housing feet for frame sizes 132 S/M and 160 L/M each have 2 holes at NDE.

Types of construction IM B5 and IM V1

For flange dimensions, see page 1/53 (**Z** = the number of retaining holes)

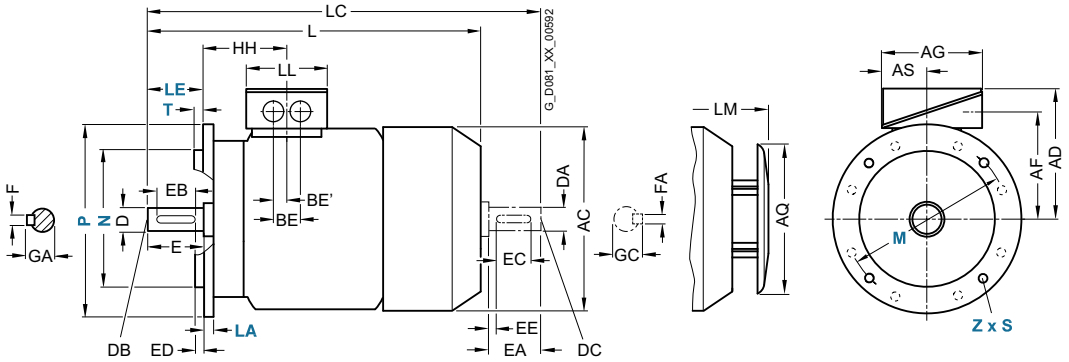

For motor			Dimension designation acc. to **IEC**																					
Frame size	Motor type 1MB10.1, 1MB10.2	No. of poles	A	AA	AB	AC	AD	AD'	AF	AF'	AG	AQ	AS	B	BA	BA'	BB	BC	BE	BE'	C	CA	H	HA	Y
80 M	1MB10.1	2, 4, 6	125	30.5	150	159	149	149	96.5	112.5	119.5	155	61.5	100	32	32	118	23	36	18	50	112.5	80	8	41
90 S	1MB10.1	2, 4, 6	140	30.5	165	178	154	154	101.5	117.5	119.5	155	62.5	100	33	54	143	22.5	36	18	56	159	90	10	47
90 L	1MB10.1	2, 4, 6	140	30.5	165	178	154	154	101.5	117.7	119.5	155	62.5	125	33	54	143	22.5	36	18	56	134	90	10	47
100 L	All	2, 4, 6, 8	160	42	196	198	166	166	125.5	125.5	135	195	63.5	140	37.5	37.5	176	33.5	50	25	63	141	100	12	45
112 M	All	2, 4, 6, 8	190	46	226	222	177	177	136.5	136.5	135	195	63.5	140	35.4	37.5	176	26	50	25	70	129.7	112	12	52
132 S	All	2, 4, 6, 8	216	53	256	262	202	202	159.5	159.5	155	260	70.5	140	38	76 [1]	218 [2]	26.5	48	24	89	128.5 [3]	132	15	69
132 M	All	2, 4, 6, 8	216	53	256	262	202	202	159.5	159.5	155	260	70.5	178	38	76	218	26.5	48	24	89	128.5 [3]	132	15	69
160 M	All	2, 4, 6, 8	254	60	300	314	236.5	236.5	190	190	175	260	77.5	210	44	89 [4]	300 [5]	47	57	28.5	108	148 [6]	160	18	85
160 L	All	2, 4, 6, 8	254	60	300	314	236.5	236.5	190	190	175	260	77.5	254	44	89	300	47	57	28.5	108	148 [6]	160	18	85

1) With screwed-on feet, dimension BA' is 38 mm.
2) With screwed-on feet, dimension BB is 180 mm.
3) With screwed-on feet, dimension CA is 166.5 mm.
4) With screwed-on feet, dimension BA' is 44 mm.
5) With screwed-on feet, dimension BB is 256 mm.
6) With screwed-on feet, dimension CA is 192 mm.

© Siemens AG 2018

Dimensional drawings (continued)

Type of construction IM B35

For flange dimensions, see page 1/53 (**Z** = the number of retaining holes)

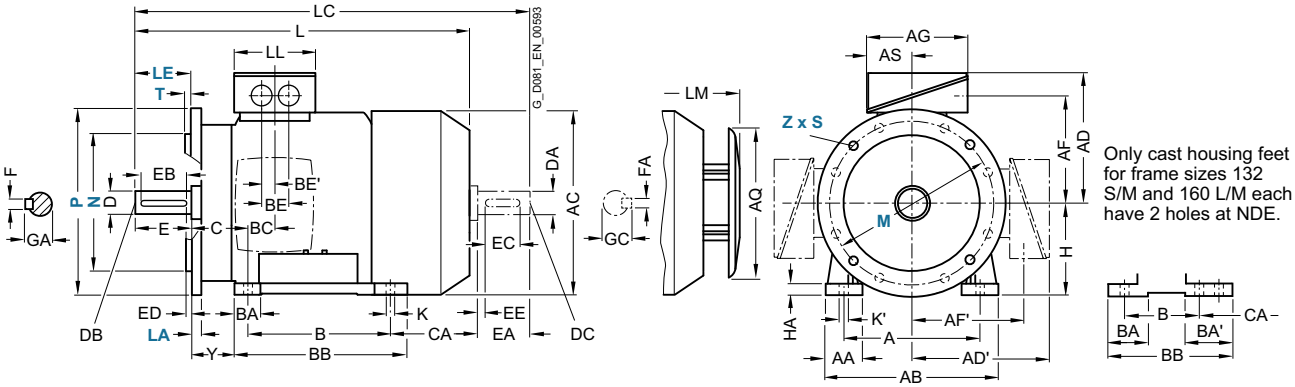

Type of construction IM B14

For flange dimensions, see page 1/53 (**Z** = the number of retaining holes)

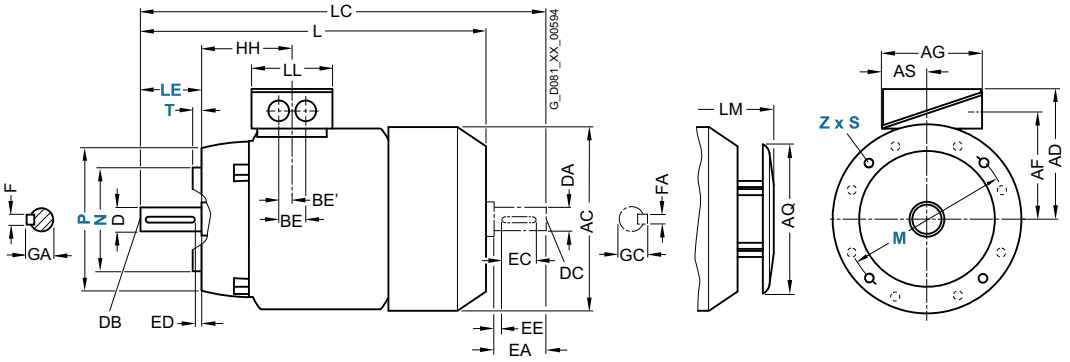

For motor			Dimension designation acc. to **IEC**							DE shaft extension							NDE shaft extension						
Frame size	Motor type 1MB10.1, 1MB10.2	No. of poles	HH	K	K'	L	LC	LL	LM	D	DB	E	EB	ED	F	GA	DA	DC	EA	EC	EE	FA	GC
80 M	1MB10.1	2, 4, 6	73	9.5	13.5	253	342.5	123	328	19	M6	40	32	4	6	21.5	19	M6	40	32	4	6	21.5
90 S/L	1MB10.1	2, 4, 6	78.5	10	14	294.5	405	123	383	24	M8	50	40	5	8	27	19	M6	40	32	4	6	21.5
90 L	1MB10.1	2, 4, 6	78.5	10	14	294.5	405	123	383	24	M8	50	40	5	8	27	19	M6	40	32	4	6	21.5
100 L	All	2, 4, 6, 8	96.5	12	16	388.5	454	112	428.5	28	M10	60	50	5	8	31	24	M8	50	40	5	8	27
112 M	All	2, 4, 6, 8	96	12	16	382	450	112	422	28	M10	60	50	5	8	31	24	M8	50	40	5	8	27
132 S	All	2, 4, 6, 8	115.5	12	16	456.5	535.5	130	516.5	38	M12	80	70	5	10	41	28	M10	60	50	5	8	31
132 M	All	2, 4, 6, 8	115.5	12	16	456.5	535.5	130	516.5	38	M12	80	70	5	10	41	28	M10	60	50	5	8	31
160 M	All	2, 4, 6, 8	155	15	19	594	730	145	654	42	M16	110	90	10	12	45	42	M16	110	90	10	12	45
160 L	All	2, 4, 6, 8	155	15	19	594	730	145	654	42	M16	110	90	10	12	45	42	M16	110	90	10	12	45

© Siemens AG 2018

Dimensional drawings (continued)

Type of construction IM B3

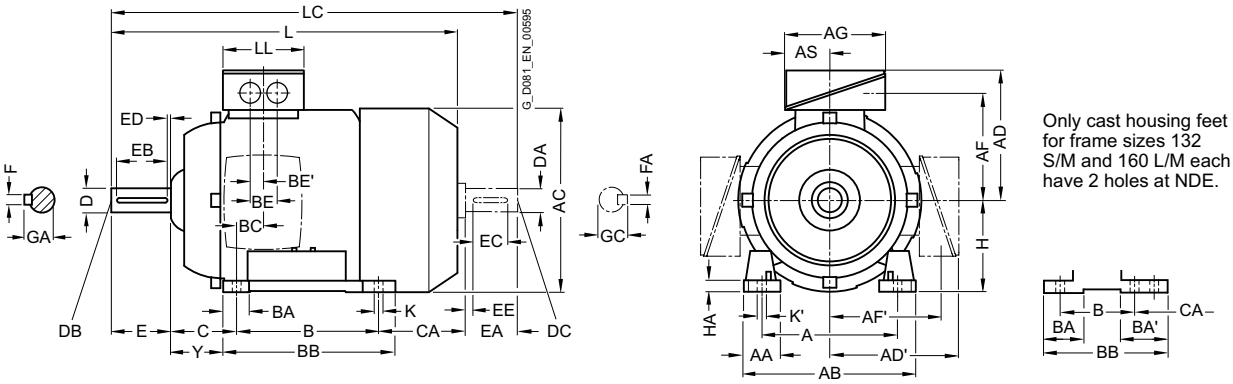

Only cast housing feet for frame sizes 132 S/M and 160 L/M each have 2 holes at NDE.

Types of construction IM B5 and IM V1

For flange dimensions, see page 1/53 (**Z** = the number of retaining holes)

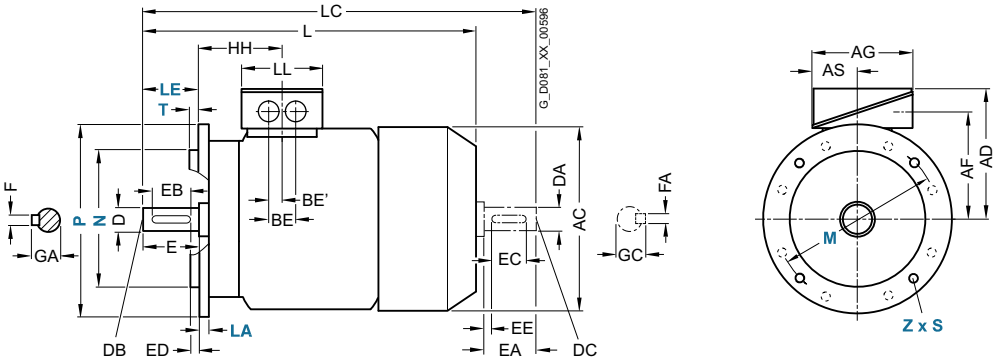

For motor			Dimension designation acc. to **IEC**																				
Frame size	Motor type 1MB15.3-, 1MB16.3-	No. of poles	A	AA	AB	AC	AD	AD'	AF	AF'	AG	AS	B	BA	BA'	BB	BC	BE	BE'	C	CA	H	HA	Y
71 M	0CA2, 0CB2, 0CC2	2, 4, 6	112	30.5	132	145	149	149	112	112	126	62	90	32	32	106	21	36	18	45	83	71	7	37
	0CA3, 0CB3, 0CC3																28							
80 M	0DA2, 0DB2, 0DC2	2, 4, 6	125	30.5	150	162	159	159	122	122	126	62	100	32	32	118	22.5	36	18	50	112.5	80	8	41
	0DA3, 0DB3, 0DC3																							
90 S	All	2, 4, 6	140	30.5	165	180	164	164	127	127	126	62	100	33	54	143	24.5	36	18	56	149	90	10	47
90 L	All	2, 4, 6	140	30.5	165	180	164	164	127	127	126	62	125	33	54	143	24.5	36	18	56	164	90	10	47
100 L	All	2, 4, 6	160	42	196	198	193	193	147	147	163	80.5	140	40	40	176	37.5	48	24	63	176	100	12	45
112 M	All	2, 4, 6	190	46	226	222	195	195	150	150	163	80.5	140	40	40	176	30	48	24	70	155	112	12	52
132 S	1CA0, 1CC0	2, 6	216	53	256	262	214.5	214.5	169	169	163	80.5	140	44	81 [1]	218 [2]	26.5	48	24	89	128.5	132	15	69
	1CA1, 1CB0	2, 4													–						178.5			
132 M	1CC2	6	216	53	256	262	214.5	214.5	169	169	163	80.5	178	44	81 [1]	218	26.5	48	24	89	128.5	132	15	69
	1CB2, 1CC3	4, 6													–						178.5			
160 M	All	2, 4, 6	254	60	300	314	261	261	213	213	190	92	210	73	117 [3]	300 [4]	37	60	30	108	148	160	18	85
160 L	All	2, 4, 6	254	60	300	314	261	261	213	213	190	92	254	73	117 [3]	300	37	60	30	108	208	160	18	85

[1] With screwed-on feet, dimension BA' is 43 mm.
[2] With screwed-on feet, dimension BB is 180 mm.
[3] With screwed-on feet, dimension BA' is 51 mm.
[4] With screwed-on feet, dimension BB is 256 mm.

© Siemens AG 2018

Dimensional drawings (continued)

Type of construction IM B35

For flange dimensions, see page 1/53 (**Z** = the number of retaining holes)

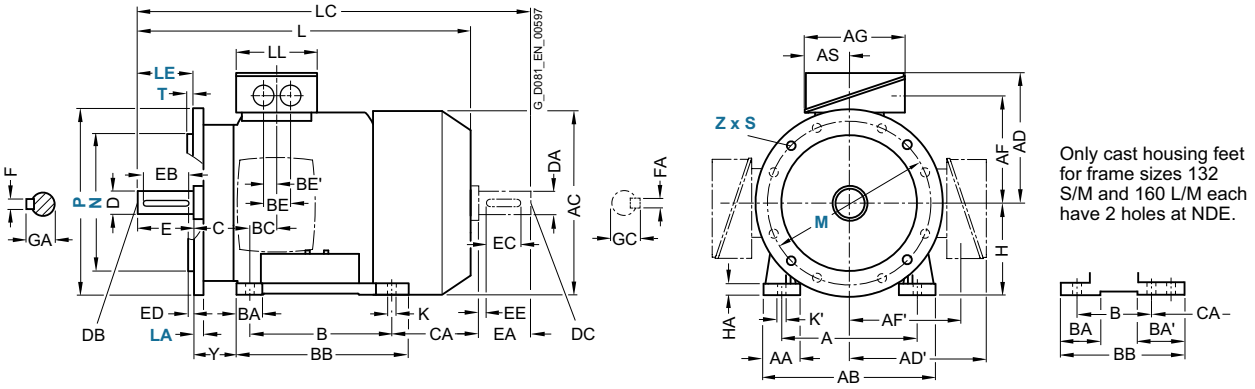

Type of construction IM B14

For flange dimensions, see page 1/53 (**Z** = the number of retaining holes)

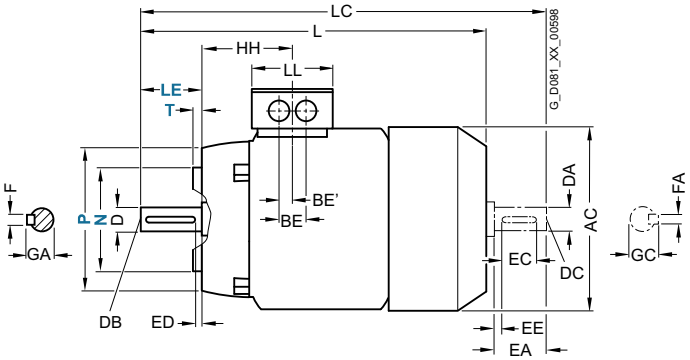

For motor			Dimension designation acc. to **IEC**						DE shaft extension							NDE shaft extension							
Frame size	Motor type 1MB15.3-, 1MB16.3-	No. of poles	HH	K	K'	L	LC	LL	D	DB	E	EB	ED	F	GA	DA	DC	EA	EC	EE	FA	GC
71 M	0CA2, 0CB2, 0CC2	2, 4, 6	63	7.5	7.5	240	278	102	14	M5	30	22	4	5	16	14	M5	30	22	4	5	16
	0CA3, 0CB3, 0CC3		70			280	318															
80 M	0DA2, 0DB2, 0DC2	2, 4, 6	72.5	10	13.5	292	342.5	102	19	M6	40	32	4	6	21.5	19	M6	40	32	4	6	21.5
	0DA3, 0DB3 0DC3					327	377.5															
90 S	All	2, 4, 6	80.5	10	10	347	405	102	24	M8	50	40	5	8	27	24	M8	50	40	5	8	27
90 L	All	2, 4, 6	80.5	10	10	387	445	102	24	M8	50	40	5	8	27	24	M8	50	40	5	8	27
100 L	All	2, 4, 6	100.5	12	16	418	489	134	28	M10	60	50	5	8	31	24	M8	50	40	5	8	27
112 M	All	2, 4, 6	100.5	12	16	402	475	134	28	M10	60	50	5	8	31	24	M8	50	40	5	8	27
132 S	1CA0, 1CC0	2, 6	115.5	12	16	449.5	536	134	38	M12	80	70	5	10	41	28	M10	60	50	5	8	31
	1CA1, 1CB0	2, 4				499.5	586															
132 M	1CC2	6	115.5	12	16	449.5	536	134	38	M12	80	70	5	10	41	28	M10	60	50	5	8	31
	1CB2, 1CC3	4, 6				499.5	586															
160 M	All	2, 4, 6	145	15	19	586	730	165	42	M16	110	90	10	12	45	42	M16	110	90	10	12	45
160 L	All	2, 4, 6	145	15	19	646	790	165	42	M16	110	90	10	12	45	42	M16	110	90	10	12	45

© Siemens AG 2018

Dimensional drawings (continued)

Type of construction IM B3

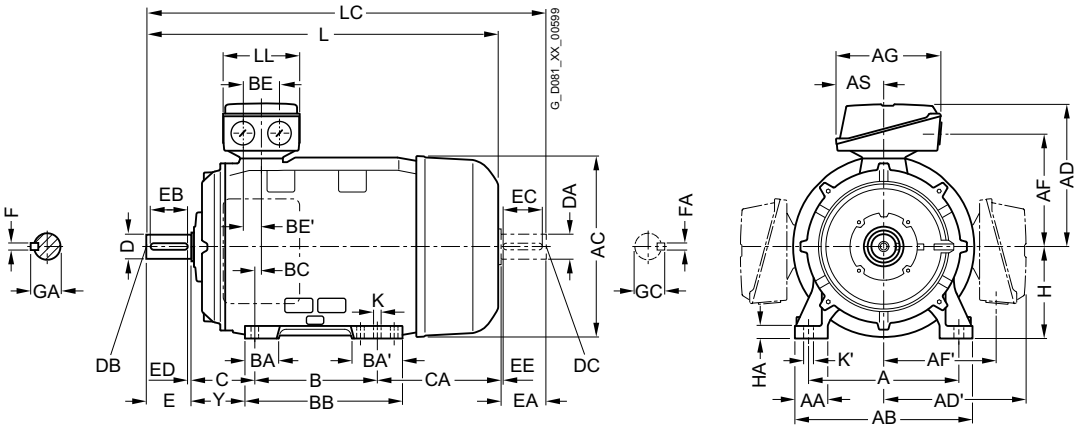

Types of construction IM B5 and IM V1

For flange dimensions, see page 1/53 (**Z** = the number of retaining holes)

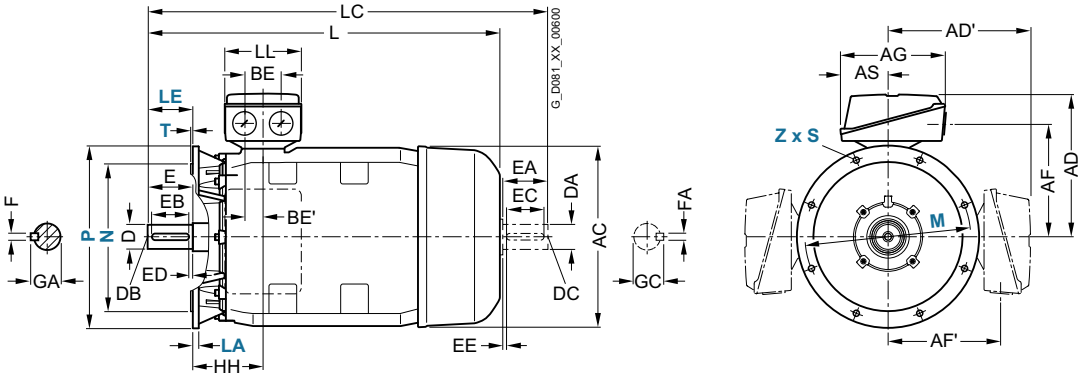

For motor			Dimension designation acc. to **IEC**																		
Frame size	Motor type 1MB15.3-, 1MB16.3-	No. of poles	A	AA	AB	AC	AD	AD'	AF	AF'	AG	AH	AS	B	BA	BA'	BB	BC	BE	BE'	C	CA
180 M	1EA2	2	279	65	339	356	286	286	234	234	190	468	92	241	85	120	328	34	60	30	121	202
	1EB2	4																				
180 L	1EB4	4	279	65	339	356	286	286	234	234	190	468	92	279	85	120	328	34	60	30	121	202
	1EC4	6																				
200 L	2AA4, 2AC4	2, 6	318	60	378	396	315	315	259	259	266	533	112	305	104	104	355	31	85	42.5	133	177
	2AA5, 2AB5, 2AC5	2, 4, 6																				
225 S	2BB0	4	356	80	436	449	338	338	282	282	266	556	112	286	92	117	361	15	85	42.5	149	218
225 M	2BA2	2	356	80	436	449	338	338	282	282	266	556	112	311	92	117	361	15	85	42.5	149	253
	2BB2, 2BC2	4, 6																				
250 M	2CA2	2	406	100	490	497	410	410	322	322	319	620	145	349	102	102	409	24	110	55	168	230
	2CB2, 2CC2	4, 6																				
280 S	2DA0	2	457	100	540	551	433	433	345	345	319	672	145	368	101	152	479	20	110	55	190	267
	2DB0, 2DC0	4, 6																				
280 M	2DA2	2	457	100	540	551	433	433	345	345	319	672	145	419	101	152	479	20	110	55	190	326
	2DB2	4																				
	2DC2	6																				216
315 S	3AA0	2	508	120	610	616	515	515	404	404	374	780	164	406	113	170	527	22	110	55	216	295
	3AB0, 3AC0	4, 6																				
315 M	3AA2	2	508	120	610	616	515	515	404	404	374	780	164	457	113	170	578	22	110	55	216	409
	3AB2, 3AC2	4, 6																				
315 L	3AA4	2	508	120	610	616	515	515	404	404	374	780	164	508	113	170	578	22	110	55	216	358
	3AB4, 3AC4	4, 6																				
	3AA5	2													176	227	648					513
	3AB5, 3AC5, 3AC6	4, 6																				

© Siemens AG 2018

Dimensional drawings (continued)

Type of construction IM B35

For flange dimensions, see page 1/53 (**Z** = the number of retaining holes)

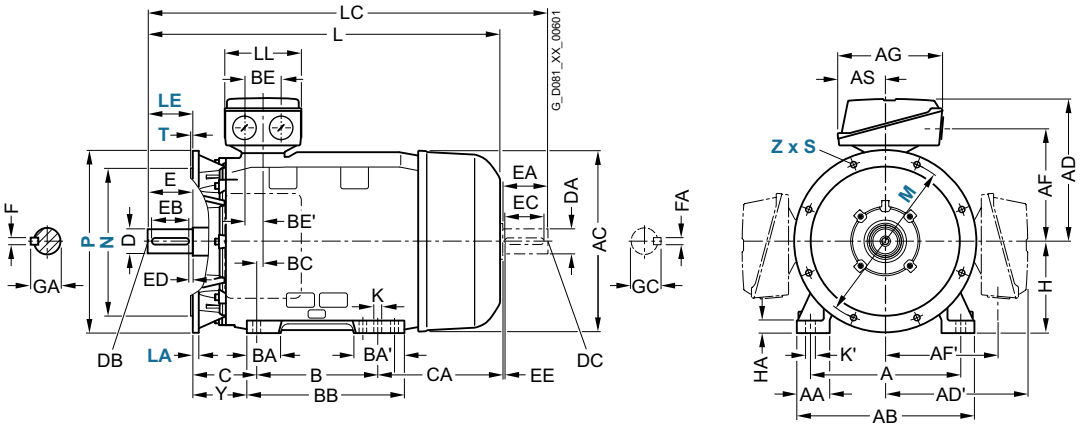

For motor		Dimension designation acc. to **IEC**												DE shaft extension							NDE shaft extension						
Frame size	Motor type 1MB15.3-, 1MB16.3-	No. of poles	H	HA	Y	HH	K	K'	L	L' [1]	LC [2]	LL	D	DB	E	EB	ED	F	GA	DA	DC	EA	EC	EE	FA	GC
180 M	1EA2	2	180	20	95	155	15	19	698	698	814	165	48	M16	110	100	5	14	52	48	M16	110	100	5	14	51.5
	1EB2	4							668	668	784															
180 L	1EB4	4	180	20	95	155	15	19	698	698	814	165	48	M16	110	100	5	14	52	48	M16	110	100	5	14	51.5
	1EC4	6							668	668	784															
200 L	2AA4, 2AC4	2, 6	200	25	108	164	19	25	721	755	835	197	55	M20	110	100	5	16	59	55	M20	110	100	5	16	59
	2AA5, 2AB5, 2AC5	2, 4, 6							746	780	860															
225 S	2BB0	4	225	34	124	164	19	25	788	–	903	197	60	M20	140	125	10	18	64	55	M20	110	100	5	16	59
225 M	2BA2	2	225	34	124	164	19	25	818	852	933	197	55	M20	110	100	5	16	59	48	M16	110	100	5	14	51.5
	2BB2, 2BC2	4, 6							848	–	963		60		140	125	10	18	64	55	M20				16	59
250 M	2CA2	2	250	40	138	192	24	30	887	924	1002	233	60	M20	140	125	10	18	64	55	M20	110	100	5	16	59
	2CB2, 2CC2	4, 6								–	1032		65						69	60		140	125	10	18	64
280 S	2DA0	2	280	40	160	210	24	30	960	998	1105	233	65	M20	140	125	10	18	69	60	M20	140	125	10	18	64
	2DB0, 2DC0	4, 6								–			75					20	79.5	65						69
280 M	2DA2	2	280	40	160	210	24	30	1070	1108	1105	233	65	M20	140	125	10	18	69	60	M20	140	125	10	18	64
	2DB2	4								–	1215		75					20	79.5	65						69
	2DC2	6							960																	
315 S	3AA0	2	315	50	181	238	28	35	1052	1122	1197	299	65	M20	140	125	10	18	69	60	M20	140	125	10	18	64
	3AB0, 3AC0	4, 6							1082	–	1227		80		170	140	25	22	85	70					20	74.5
315 M	3AA2	2	315	50	181	238	28	35	1217	1287	1362	299	65	M20	140	125	10	18	69	60	M20	140	125	10	18	64
	3AB2, 3AC2	4, 6							1247	–	1392		80		170	140	25	22	85	70					20	74.5
315 L	3AA4	2	315	50	181	238	28	35	1217	1287	1362	299	65	M20	140	125	10	18	69	60	M20	140	125	10	18	64
	3AB4, 3AC4	4, 6							1247	–	1392		80		170	140	25	22	85	70					20	74.5
	3AA5	2			146				1372	1442	1517		65		140	125	10	18	69	60					18	64
	3AB5, 3AC5, 3AC6	4, 6							1402	–	1547		80		170	140	25	22	85	70					20	74.5

© Siemens AG 2018

Dimensional drawings (continued)

Type of construction IM B3

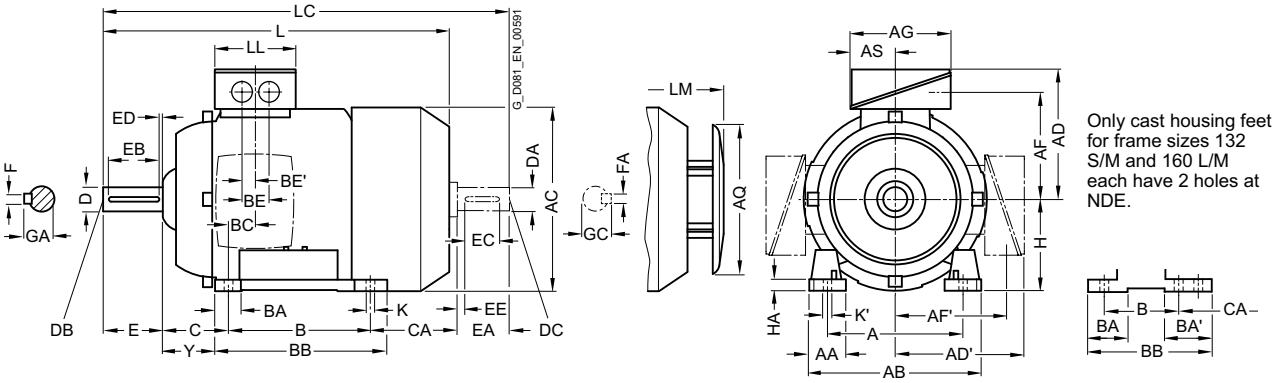

Only cast housing feet for frame sizes 132 S/M and 160 L/M each have 2 holes at NDE.

Types of construction IM B5 and IM V1

For flange dimensions, see page 1/53 (**Z** = the number of retaining holes)

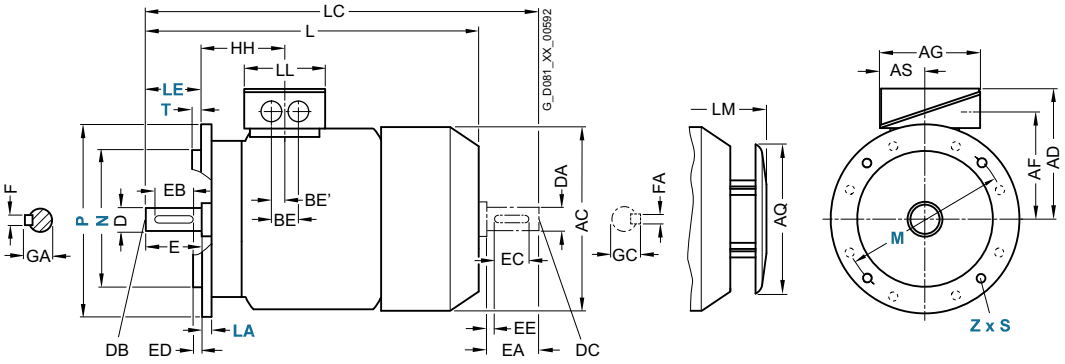

For motor			Dimension designation acc. to **IEC**																				
Frame size	Motor type 1MB15.1, 1MB16.1	No. of poles	A	AA	AB	AC	AD	AD'	AF	AF'	AG	AS	B	BA	BA'	BB	BC	BE	BE'	C	CA	H	HA	Y
71 M	0CA2, 0CB2, 0CC2, 0CD2	2, 4, 6, 8	112	30.5	132	145	149	149	112	112	126	62	90	32	32	106	21	36	18	45	83	71	7	37
	0CA3, 0CB3, 0CC3, 0CD3																28							
80 M	0DA2, 0DB2, 0DC2, 0DD2	2, 4, 6, 8	125	30.5	150	162	159	159	122	122	126	62	100	32	32	118	22.5	36	18	50	112.5	80	8	41
	0DA3, 0DB3, 0DC3, 0DD3																							
90 S	All	2, 4, 6, 8	140	30.5	165	180	164	164	127	127	126	62	100	33	54	143	24.5	36	18	56	149	90	10	47
90 L	All	2, 4, 6, 8	140	30.5	165	180	164	164	127	127	126	62	125	33	54	143	24.5	36	18	56	124	90	10	47
100 L	All	2, 4, 6, 8	160	42	196	198	193	193	147	147	163	80.5	140	40	40	176	37.5	48	24	63	141	100	12	45
112 M	1BA2, 1BB2, 1BC2	2, 4, 6	190	46	226	222	195	195	150	150	163	80.5	140	40	40	176	30	48	24	70	129.7	112	12	52
	1BD2	8																						
132 S	All	2, 4, 6, 8	216	53	256	262	214.5	214.5	169	169	163	80.5	140	44	81 [1]	218 [3]	26.5	48	24	89	167	132	15	69
132 M	All	2, 4, 6, 8	216	53	256	262	214.5	214.5	169	169	163	80.5	178	44	81 [1]	218	26.5	48	24	89	129	132	15	69
160 M	All	2, 4, 6, 8	254	60	300	314	265	265	213	213	190	92	210	51	95 [2]	300 [4]	37	60	30	108	192	160	18	85
160 L	All	2, 4, 6, 8	254	60	300	314	265	265	213	213	190	92	254	51	95 [2]	300	37	60	30	108	148	160	18	85

[1] With screwed-on feet, dimension BA' is 43 mm.
[2] With screwed-on feet, dimension BA' is 51 mm.
[3] With screwed-on feet, dimension BB is 180 mm.
[4] With screwed-on feet, dimension BB is 256 mm

© Siemens AG 2018

Dimensional drawings (continued)

Type of construction IM B35

For flange dimensions, see page 1/53 (**Z** = the number of retaining holes)

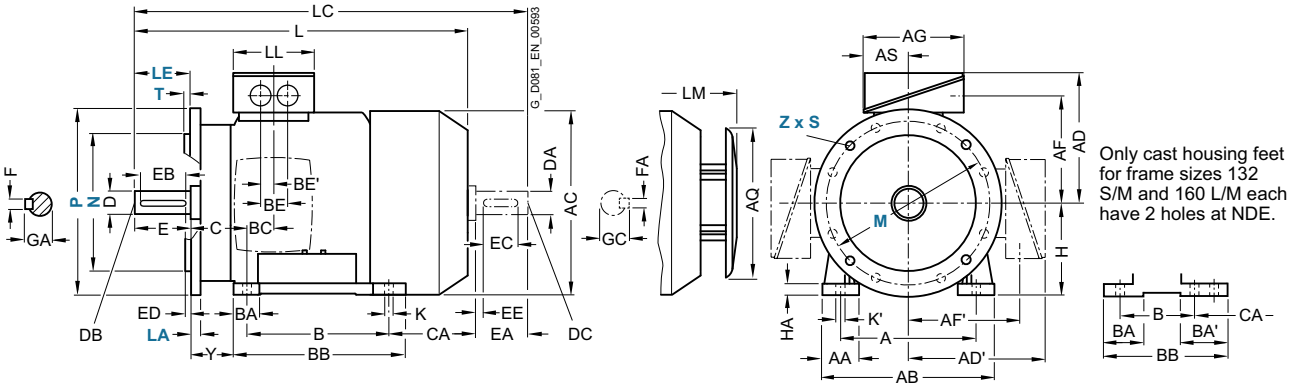

Type of construction IM B14

For flange dimensions, see page 1/53 (**Z** = the number of retaining holes)

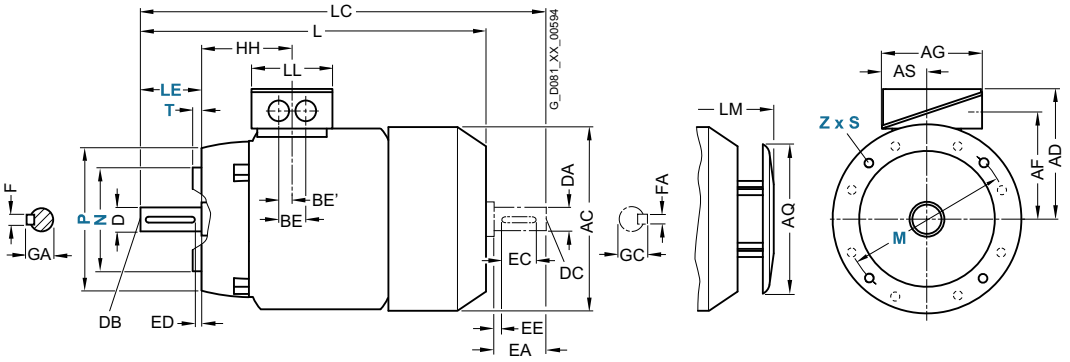

For motor			Dimension designation acc. to **IEC**						DE shaft extension							NDE shaft extension							
Frame size	Motor type 1MB15.1, 1MB16.1	No. of poles	HH	K	K'	L	LC	LL	D	DB	E	EB	ED	F	GA	DA	DC	EA	EC	EE	FA	GC
71 M	0CA2, 0CB2, 0CC2, 0CD2	2, 4, 6, 8	63	7	7	240	278	102	14	M5	30	22	4	5	16	14	M5	30	22	4	5	16
	0CA3, 0CB3, 0CC3, 0CD3		70			280	318															
80 M	0DA2, 0DB2, 0DC2, 0DD2	2, 4, 6, 8	72.5	10	13.5	292	342.5	102	19	M6	40	32	4	6	21.5	19	M6	40	32	4	6	21.5
	0DA3, 0DB3, 0DC3, 0DD3					327	377.5															
90 S	All	2, 4, 6, 8	80.5	10	10	347	405	102	24	M8	50	40	5	8	27	24	M8	50	40	5	8	27
90 L	All	2, 4, 6, 8	80.5	10	10	387	445	102	24	M8	50	40	5	8	27	24	M8	50	40	5	8	27
100 L	All	2, 4, 6, 8	100.5	12	16	390.5	454	134	28	M10	60	50	5	8	31	24	M8	50	40	5	8	27
112 M	1BA2, 1BB2, 1BC2	2, 4, 6	100.5	12	16	390.5	450	134	28	M10	60	50	5	8	31	24	M8	50	40	5	8	27
	1BD2	8				408.5	475															
132 S	All	2, 4, 6, 8	115.5	12	16	458	536	134	38	M12	80	70	5	10	41	28	M10	60	50	5	8	31
132 M	All	2, 4, 6, 8	115.5	12	16	458	536	134	38	M12	80	70	5	10	41	28	M10	60	50	5	8	31
160 M	All	2, 4, 6, 8	145	15	19	596	730	165	42	M16	110	90	10	12	45	42	M16	110	90	10	12	45
160 L	All	2, 4, 6, 8	145	15	19	596	730	165	42	M16	110	90	10	12	45	42	M16	110	90	10	12	45

© Siemens AG 2018

Dimensional drawings (continued)

Type of construction IM B3

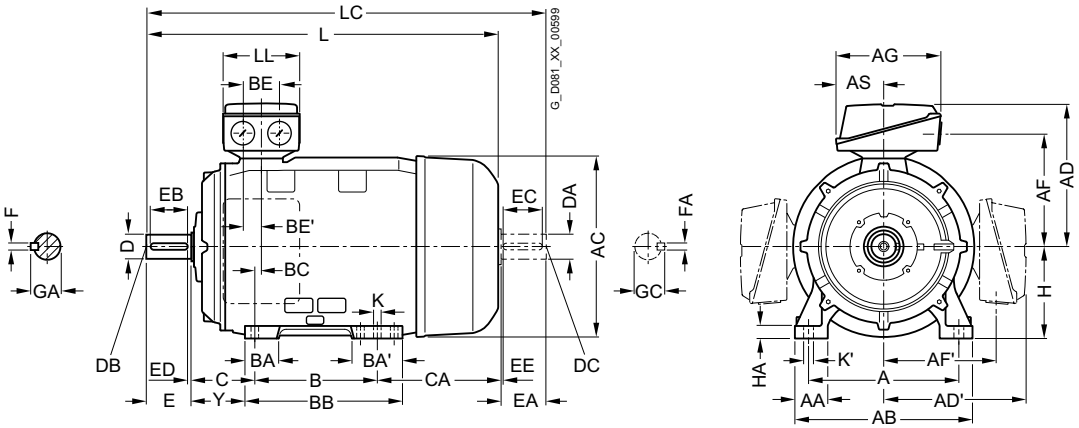

Types of construction IM B5 and IM V1

For flange dimensions, see page 1/53 (**Z** = the number of retaining holes)

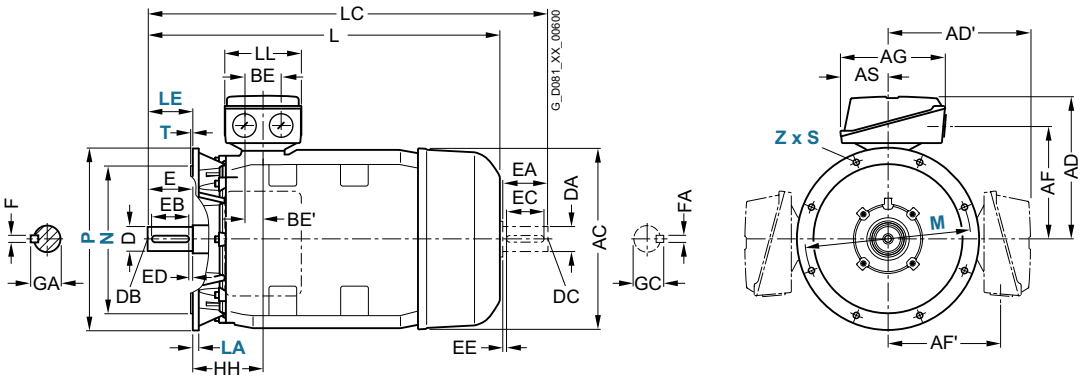

For motor			Dimension designation acc. to **IEC**																		
Frame size	Motor type 1MB15.1-, 1MB16.1-	No. of poles	A	AA	AB	AC	AD	AD'	AF	AF'	AG	AH	AS	B	BA	BA'	BB	BC	BE	BE'	C	CA
180 M/ 180 L	1EA2, 1EB24	2, 4	279	65	339	356	286	286	234	234	190	468	92	241	85	120	328	34	60	30	121	202
	1EC4, 1ED4	6, 8												279								
	1EB4	4																				
200 L	All	2, 4, 6, 8	318	60	378	396	315	315	259	259	266	533	112	305	104	104	355	31	85	42.5	133	177
225 S/ 225 M	2BB0, 2BD0,	4, 8	356	80	436	449	338	338	282	282	266	556	112	311	92	117	361	15	85	42.5	149	253
	2BB2, 2BC2, 2BD2	4, 6, 8																				
	2BA2	2																				
250 M	2CA2	2	406	100	490	497	410	410	322	322	319	620	145	349	102	102	409	24	110	55	168	230
	2CB2, 2CC2, 2CD2	4, 6, 8																				

© Siemens AG 2018

Dimensional drawings (continued)

Type of construction IM B35

For flange dimensions, see page 1/53 (**Z** = the number of retaining holes)

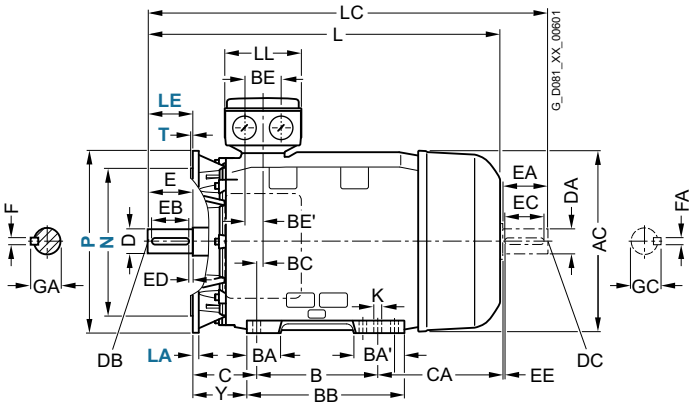

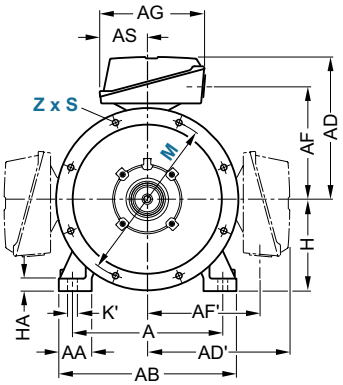

For motor			Dimension designation acc. to **IEC**								DE shaft extension							NDE shaft extension						
Frame size	Motor type 1MB15.1-, 1MB16.1-	No. of poles	H	HA	Y	HH	K	K'	L	LC	LL	D	DB	E	EB	ED	F	GA	DA	DC	EA	EC	EE	FA	GC
180 M/ 180 L	1EA2, 1EB2	2, 4	180	20	95	155	15	19	668	784	165	48	M16	110	100	5	14	52	48	M16	110	100	5	14	51.5
	1EC4, 1ED4	6, 8																							
	1EB4	4							698	814															
200 L	All	2, 4, 6, 8	200	25	108	164	19	25	721	835	197	55	M20	110	100	5	16	59	55	M20	110	100	5	16	59
225 S/ 225 M	2BB0, 2BD0,	4, 8	225	34	124	164	19	25	788	903	197	60	M20	140	125	10	18	64	55	M20	110	100	5	16	59
	2BB2, 2BC2, 2BD2	4, 6, 8							848	963															
	2BA2	2							818	933		55		110	100	5	16	59	48	M16			14	51.5	
250 M	2CA2	2	250	40	138	192	24	30	887	1002	233	60	M20	140	125	10	18	64	55	M20	110	100	5	16	59
	2CB2, 2CC2, 2CD2	4, 6, 8								1032		65						69	60		140	125	10	18	64

© Siemens AG 2018

Dimensional drawings (continued)

Type of construction IM B3

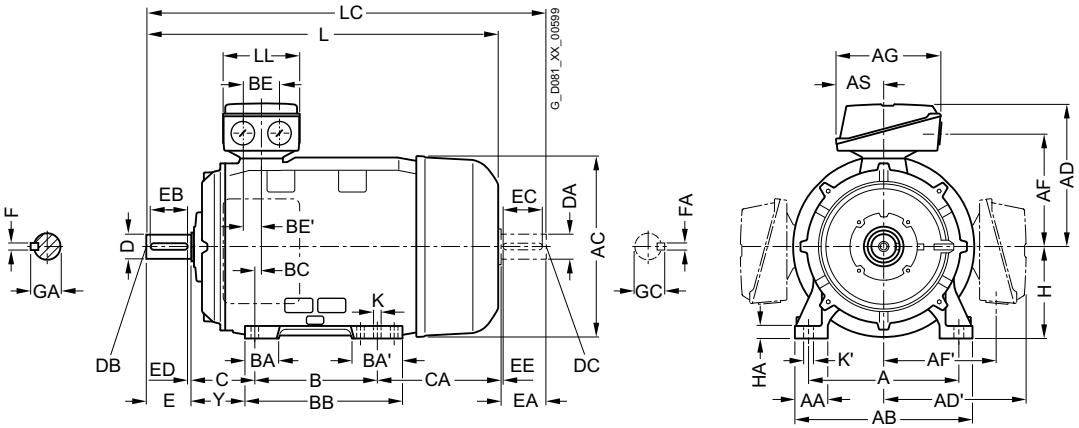

Types of construction IM B5 and IM V1

For flange dimensions, see page 1/53 (**Z** = the number of retaining holes)

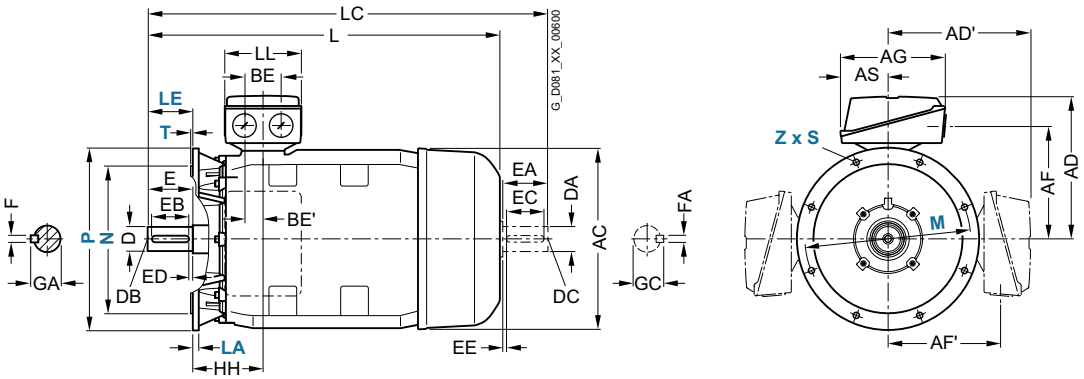

For motor			Dimension designation acc. to **IEC**																		
Frame size	Motor type 1MB15.1-, 1MB16.1-	No. of poles	A	AA	AB	AC	AD	AD'	AF	AF'	AG	AH	AS	B	BA	BA'	BB	BC	BE	BE'	C	CA
280 S	2DA0	2	457	100	540	551	433	433	345	345	319	672	145	368	101	152	479	20	110	55	190	267
	2DB0, 2DC0, 2DD0	4, 6, 8																				
280 M	2DA2	2	457	100	540	551	433	433	345	345	319	672	145	419	101	152	479	20	110	55	190	216
	2DB2, 2DC2, 2DD2	4, 6, 8																				
315 S	3AA0	2	508	120	610	616	515	515	404	404	374	780	164	406	113	170	527	22	110	55	216	295
	3AB0, 3AC0, 3AD0	4, 6, 8																				
315 M	3AA2	2	508	120	610	616	515	515	404	404	374	780	164	457	113	170	578	22	110	55	216	409
	3AB2	4																				
	3AC2, 3AD2	6, 8															327					244
315 L	3AA4	2	508	120	610	616	515	515	404	404	374	780	164	508	113	170	578	22	110	55	216	358
	3AB4, 3AC4, 3AD4, 3AC5, 3AD5, 3AD6	4, 6, 8																				
	3AA5	2													176	227	648					513
	3AB5 [1], 3AC6 [1]	4, 6																				

[1] When ordering a terminal box positioned on the left-hand side or right-hand side, the feet are screwed on as standard.
These screwed-on feet have 3 drill holes on the NDE with the respective dimension B 406, 457 and 508 mm; the dimension BB is 666 mm.

© Siemens AG 2018

Dimensional drawings (continued)

Type of construction IM B35

For flange dimensions, see page 1/53 (**Z** = the number of retaining holes)

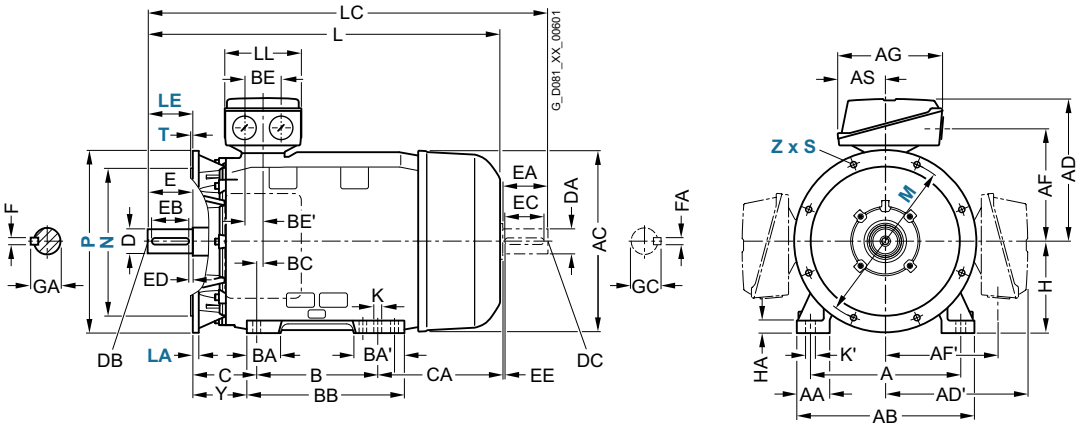

For motor			Dimension designation acc. to **IEC**									DE shaft extension							NDE shaft extension						
Frame size	Motor type 1MB15.1-, 1MB16.1-	No. of poles	H	HA	Y	HH	K	K'	L	LC	LL	D	DB	E	EB	ED	F	GA	DA	DC	EA	EC	EE	FA	GC
280 S	2DA0	2	280	40	160	210	24	30	960	1105	233	65	M20	140	125	10	18	69	60	M20	140	125	10	18	64
	2DB0, 2DC0, 2DD0	4, 6, 8										75					20	79.5	65						69
280 M	2DA2	2	280	40	160	210	24	30	960	1105	233	65	M20	140	125	10	18	69	60	M20	140	125	10	18	64
	2DB2, 2DC2, 2DD2	4, 6, 8										75					20	79.5	65						69
315 S	3AA0	2	315	50	181	238	28	35	1052	1197	299	65	M20	140	125	10	18	69	60	M20	140	125	10	18	64
	3AB0, 3AC0, 3AD0	4, 6, 8							1082	1227		80		170	140	25	22	85	70					20	74.5
315 M	3AA2	2	315	50	181	238	28	35	1217	1362	299	65	M20	140	125	10	18	69	60	M20	140	125	10	18	64
	3AB2	4							1247	1392		80		170	140	25	22	85	70					20	74.5
	3AC2, 3AD2	6, 8							1082	1227															
315 L	3AA4	2	315	50	181	238	28	35	1217	1362	299	65	M20	140	125	10	18	69	60	M20	140	125	10	18	64
	3AB4, 3AC4, 3AD4, 3AC5, 3AD5, 3AD6	4, 6, 8							1247	1392		80		170	140	25	22	85	70					20	74.5
	3AA5	2			146				1372	1517		65		140	125	10	18	69	60					18	64
	3AB5, 3AC6	4, 6							1402	1547		80		170	140	25	22	85	70					20	74.5

© Siemens AG 2018

Notes

© Siemens AG 2018

6/2 Introduction
6/2 Overview

6/3 Smoke extraction motors

6/3 Orientation
6/3 Overview
6/4 Benefits
6/4 Application
6/4 Technical specifications

6/8 Article number code
6/8 Selection and ordering data

6/9 Selection and ordering data
6/9 Self-ventilated or forced-air cooled motors with IE3 Premium Efficiency
6/9 Aluminum series 1PC1303
6/10 Cast-iron series 1PC1304
6/11 Self-ventilated or forced-air cooled motors with IE2 High Efficiency
6/11 Aluminum series 1PC1300
6/13 Cast-iron series 1PC1301

6/15 Article No. supplements and special versions
6/15 Voltages
6/15 Aluminum series 1PC1300, 1PC1303
6/15 Cast-iron series 1PC1301, 1PC1304
6/16 Types of construction
6/16 Aluminum series 1PC1300, 1PC1303
6/18 Cast-iron series 1PC1301, 1PC1304
6/19 Motor protection
6/19 Aluminum series 1PC1300, 1PC1303
6/19 Cast-iron series 1PC1301, 1PC1304
6/20 Terminal box position
6/20 Aluminum series 1PC1300, 1PC1303
6/20 Cast-iron series 1PC1301, 1PC1304
6/21 Options
6/21 Aluminum series 1PC1300, 1PC1303
6/23 Cast-iron series 1PC1301, 1PC1304
6/25 Accessories

6/26 Dimensions
6/26 Overall dimensions
6/27 Notes on the dimensions
6/27 Dimension sheet generator
6/28 Aluminum series – IE2 and IE3
6/28 Self-ventilated, frame sizes 80 M to 160 L
6/30 Forced-air cooled, frame sizes 80 M to 160 L
6/32 Cast-iron series – IE2 and IE3
6/32 Self-ventilated, frame sizes 180 M to 250 M
6/34 Self-ventilated, frame sizes 280 S to 315 L
6/36 Forced-air cooled, frame sizes 180 M to 250 M
6/38 Forced-air cooled, frame sizes 280 S to 315 L

6/40 Marine motors

6/40 Orientation
6/40 Overview
6/41 Benefits
6/42 Application
6/42 Technical specifications
6/45 Additional notes

6/46 Special versions
6/46 Options
6/46 - Aluminum series 1LE10
6/47 - Cast-iron series 1LE15 Basic Line, 1LE16 Performance Line
6/48 - Cast-iron series 1LE55 Basic Line, 1LE56 Performance Line
6/49 - Aluminum series 1MB10, cast-iron series 1MB15/1MB16

© Siemens AG 2018

Overview

With the designation SIMOTICS DP, Siemens offers a number of industry and application specific (**D**efinite **P**urpose) motors that differ from standard motors in that they have special industry/ application-specific features:

SIMOTICS DP smoke extraction motors

Smoke extraction motors are characterized by the fact that they ensure operation of ventilation and heat extraction facilities in buildings and structures (e.g. tunnels) to keep escape routes free of smoke and increase the chances of survival in dangerous situations in accordance with standard EN 12101-3/2002, even at high temperatures.

Our smoke extraction motors in temperature class F200/F300 are therefore used in highly frequented public buildings, such as discos, shopping malls, movie theaters, theaters, airports, parking garages, stairwells, tunnels, and in industrial buildings.

You will find more information on smoke extraction motors on the following pages. Further variants (e.g. different numbers of poles) are possible on request.

SIMOTICS DP marine motors

Marine motors are exposed to air humidity and other hostile conditions on the high seas and must always perform their function reliably. Our marine motors meet the standards of the leading classification companies (DNV GL, BV, LR, RS, KR, ABS, RINA) and have type test certifications up to frame size 315 L. They are basically suitable for the higher ambient temperatures in engine rooms below deck. If requested, a representative of the marine classification society can be present in our factories to formally accept equipment.

You will find more information on marine motors on the following pages.

SIMOTICS DP steel plant motors

The steel plant motors are specially designed for applications in the steel industry with stringent requirements for vibrations and shocks according to class 3M4 (EN 60721-3-3). They provide an optimized technical and economic solution for numerous transportation tasks in the steel manufacturing process or in steel manufacturing facilities, in which no scale dust occurs. Steel plant motors can be operated at a constant speed directly on the line or are used together with the SINAMICS S120 converter for dynamic processes.

The ordering data for SIMOTICS DP steel plant motors can be found in the Catalog Add On D 81.1 AO – Motors for the steel industry.

SIMOTICS DP roller table and steel mill motors

SIMOTICS DP roller table and steel mill motors are designed for directly driving the rollers of working roller tables in reversing rolling mills. They are designed as completely enclosed three-phase induction motors, with a frame made of spheroidal graphite cast iron, ring ribs, and reinforced bearing shields. This makes the motors ideal for use with typical shocks and vibrations and severe dirt due to scale dust. On account of their special mechanical design, they meet the most stringent requirements demanded by this application. Of course, the motors are also designed for variable-speed reversing operation on frequency converters of the SINAMICS S and G series.

The ordering data for SIMOTICS DP roller table and steel mill motors can be found in the Catalog Add On D 81.1 AO – Motors for the steel industry.

SIMOTICS DP crane motors

Like marine motors, crane motors are exposed to extreme climatic conditions and must meet tough operating requirements. Our crane motors stand up to high humidity levels, salt-laden air, and high wind speeds. They are characterized by high overload capability and a large speed setting range, for example, to operate hoist mechanisms efficiently in converter operation. SIMOTICS DP crane motors are reliably protected against corrosion with especially elaborate paint systems and sealing. The rugged cast-iron motors are especially suitable for tough operation under hostile conditions, for indoor and outdoor use, e.g. in harbor facilities for rubber-tired gantry, rail-mounted gantry, and automatic stacking cranes. Special pulse encoders and brakes round off the product to form a perfectly adapted solution.

The ordering data of the SIMOTICS DP crane motors can be found in Catalog CR 81 – Crane Motors (available soon).

© Siemens AG 2018

Overview

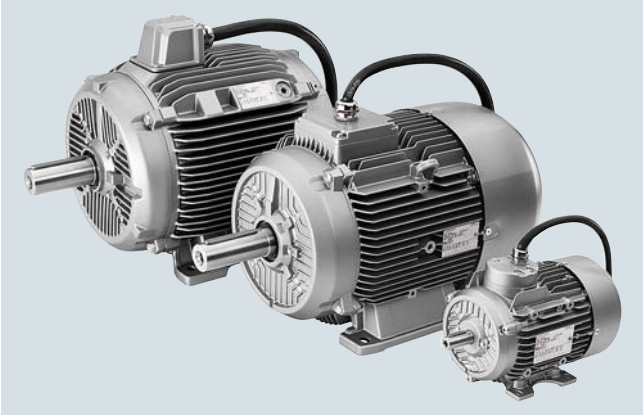

The low-voltage motors with squirrel-cage rotors in efficiency classes IE2 and IE3 for implementation in automatic smoke and heat extraction units to EN 12101-3 are mainly designed for driving smoke extraction fans. For this reason, they are known as smoke extraction motors. They are mainly used in buildings or structures in which smoke control is necessary due to their shape and arrangement.

Temperature/time classification according to EN 12101-3

- F200 corresponds to 200 °C for 120 min
- F300 corresponds to 300 °C for 60 min

Testing and test certificates

The Siemens smoke extraction motors have been tested in accordance with EN 12101-3 by the Materialprüfanstalt Braunschweig (Material Test Institute, Brunswick, Germany) in the "Institute for Building materials, concrete construction and fire protection".

Test conditions for F200/F300:
- Temperature **300 °C**
- Time **120 min**

With a test time of 120 min, in contrast to the standard test time of 60 min, the Siemens F200/F300 smoke extraction motors offer a great deal more reliability.

The test certificates are available.

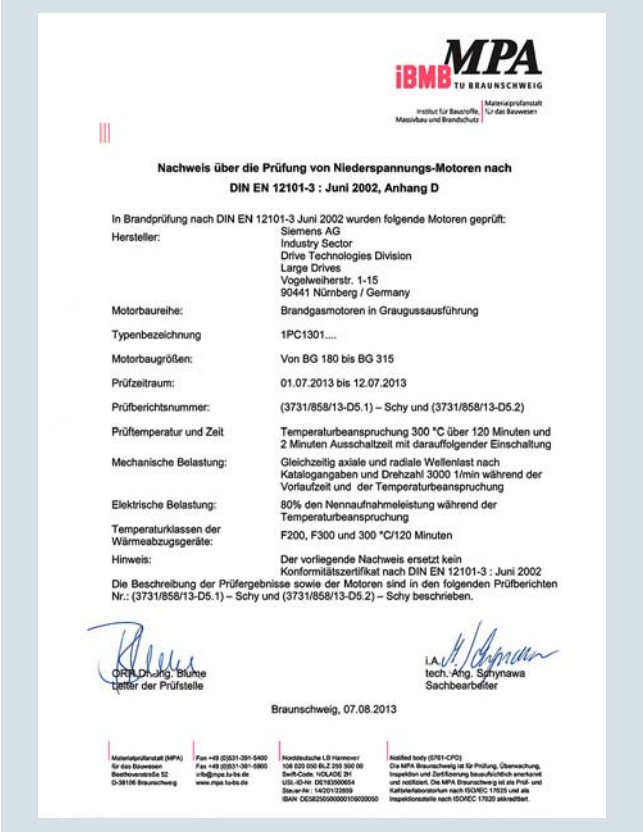

iBMB MPA TU BRAUNSCHWEIG

Nachweis über die Prüfung von Niederspannungs-Motoren nach
DIN EN 12101-3 : Juni 2002, Anhang D

In Brandprüfung nach DIN EN 12101-3 Juni 2002 wurden folgende Motoren geprüft:

Hersteller:	Siemens AG Industry Sector Drive Technologies Division Large Drives Vogelweiherstr. 1-15 90441 Nürnberg / Germany
Motorbaureihe:	Brandgasmotoren in Graugussausführung
Typenbezeichnung	1PC1301....
Motorbaugrößen:	Von BG 180 bis BG 315
Prüfzeitraum:	01.07.2013 bis 12.07.2013
Prüfberichtsnummer:	(3731/858/13-D5.1) – Schy und (3731/858/13-D5.2)
Prüftemperatur und Zeit	Temperaturbeanspruchung 300 °C über 120 Minuten und 2 Minuten Ausschaltzeit mit darauffolgender Einschaltung
Mechanische Belastung:	Gleichzeitig axiale und radiale Wellenlast nach Katalogangaben und Drehzahl 3000 1/min während der Vorlaufzeit und der Temperaturbeanspruchung
Elektrische Belastung:	80% den Nennaufnahmeleistung während der Temperaturbeanspruchung
Temperaturklassen der Wärmeabzugsgeräte:	F200, F300 und 300 °C/120 Minuten
Hinweis:	Der vorliegende Nachweis ersetzt kein Konformitätszertifikat nach DIN EN 12101-3 : Juni 2002

Die Beschreibung der Prüfergebnisse sowie der Motoren sind in den folgenden Prüfberichten Nr.: (3731/858/13-D5.1) – Schy und (3731/858/13-D5.2) – Schy beschrieben.

Dr.-Ing. Blume
Leiter der Prüfstelle

i.A.
tech. Ang. Schynawa
Sachbearbeiter

Braunschweig, 07.08.2013

The motors are manufactured with aluminum or cast-iron housings depending on their frame sizes. The smoke extraction motors are based on the standard motors and comprise the following motor types:

Temperature/time classes F200 and F300

- **Self-ventilated motors** – Aluminum series 1PC1300, 1PC1303 and cast-iron series 1PC1301, 1PC1304 – version with integrated fan (metal)
- **Forced-air cooled motors** – Aluminum series 1PC1300, 1PC1303 and cast-iron series 1PC1301, 1PC1304 (in each case Article No. with **-Z** and order code **F90**) – version without integrated fan; located in the air flow of the driven fan

The resonance of mountings and reactions from driven machines can cause high levels of vibration in the overall equipment unit. This has a significant effect on the expected lifetime of the bearing.

These vibrations are evaluated during continuous operation in accordance with Zones A and B according to ISO 10816.

To ensure safe operation of fans under standardized test conditions of 300 °C for a duration of 2 hours, the following limit values for radial vibrations on the bearing plate must be maintained even under these conditions.

Maximum admissible vibration values under standardized test conditions at 300 °C for a duration of 2 h in the test laboratory.

Frame size	Vibration velocity mm/s
80 ... 112	15
132 ... 200	20
225 ... 315	25

© Siemens AG 2018

Orientation

Benefits

The smoke extraction motors operate as so-called "dual-function motors":

- Normal operation (no instance of fire): Incoming/outgoing air flow
- Fault operation (in case of fire):
  - Removal of smoke from escape and access routes
  - Supporting fire fighting by creating a smoke-free zone
  - Protecting devices and equipment
  - Reducing the heat stress of components during a fire
  - Reducing secondary damage due to thermal byproducts and hot gases.

Admissible normal operating temperature:

-20 to 40 °C as standard

The smoke extraction motors offer the user a number of advantages:

- The assignment of standard powers is unchanged - this means that a larger construction size is not required for smoke extraction motors
- IE2 and IE3 efficiency grades comply with the European EUP Directive
- Smoke extraction motors are generally equipped with located bearings at the drive-end (DE) of the motor
- A fire event plate is screwed onto the motor
- Freely protruding cables are included in the scope of supply
- Radial-flow and axial-flow fan drive are possible
  - Self-ventilated 1PC1300 and 1PC1301 series motors with a metal fan impeller can be used as radial-flow fan drives
  - Forced-air cooled 1PC1300 and 1PC1301 series motors can be implemented as axial flow fan drives (in each case Article No. with **-Z** and order code **F90**) taking into account the required volumetric flow for motor cooling. In this case the driven fan performs the ventilation.

Application

The smoke extraction motors are designed for use in automatic smoke and heat extraction units to EN 12101-3. Typical application examples include:

- Tunnels
- Single and multi-storey shopping centers
- Industrial buildings and warehouses
- Building complexes and atriums
- Theaters
- Indoor car parks
- Staircases

Technical specifications

Standards and regulations

In addition to the relevant standards and regulations, EN 12101-3 applies for non-portable fire-fighting systems:

Systems for controlling smoke and heat flows, part 3, specifications for smoke and heat extraction units.

Voltage and frequency

Rated voltages according to IEC 60038

- 230 VΔ 50 Hz
- 400 VΔ 50 Hz and 400 VY 50 Hz
- 500VΔ 50 Hz and 500 VY 50 Hz
- 690 VY 50 Hz

Non-standard voltages (voltage codes **9** in the 12th position of the Article No., **0** in the 13th position of the Article No. and order code **M1Y**) as well as 60 Hz on request for 4 to 6-pole machines. Converter operation is permissible up to a line voltage of U_{rated} ≤ 460 V (see section "Insulation system").
Measures must be implemented in the plant by the system supplier for switchover to line operation in the event of a fire.

The following rating plates are available for the smoke extraction motors:

- Rating plate
  For the listed rated voltages with 50 Hz power data including information on bearing types and optional regreasing data
- Fire event plate
  Complete with number and year of issue of the European standard, temperature/time class and minimum duration of function.

All plates are resistant to corrosion. A second set of plates is included with the motor, loose.

Rated power, duty type, number of poles

The rated power applies for continuous duty (normal duty) according to IEC 60034-1, for a frequency of 50 Hz, ambient temperatures up to 40 °C and installation altitudes up to 1000 m above sea level.

Derating is necessary at higher coolant temperatures and installation altitudes (reduction factor k_{HT}), see table below.

Reduction factor k_{HT} for different installation altitudes and/or coolant temperatures

Reduction factor k_{HT}						
Installation altitude above **sea level**	Ambient temperature in °C					
m	< 30 °C	30 … 40 °C	45 °C	50 °C	55 °C	60 °C
1000	1.07	1.00	0.96	0.92	0.87	0.82
1500	1.04	0.97	0.93	0.89	0.84	0.79
2000	1.00	0.94	0.9	0.86	0.82	0.77
2500	0.96	0.90	0.86	0.83	0.78	0.74
3000	0.92	0.86	0.82	0.79	0.75	0.70
3500	0.88	0.82	0.79	0.75	0.71	0.67
4000	0.82	0.77	0.74	0.71	0.67	0.63

Coolant temperature and installation altitude are rounded to 5 °C and 500 m respectively

© Siemens AG 2018

Technical specifications (continued)

Operation in the event of a fire

In addition to normal duty, operation in the event of a fire as specified in EN 12101-3 is available.

At the end of the fire incident, the motor may be unfit for normal duty. **For this reason, regulations stipulate that the motor must be replaced as a matter of course.**

In the event of a fire, any "thermal motor protection" must be deactivated.

Standard number of poles

2, 4 and 6
For more poles and pole-changing motors, please inquire.

Insulation system

The special insulation systems are adapted to the respective temperature/time classes.

The insulation of the smoke extraction motors is designed such that converter operation is permissible for line voltages ≤ 460 V for frame sizes 80 to 200 and ≤ 500 V for frame sizes 225 to 315.

The following limit values (voltage values are peak values) must be complied with in all operating states:

Frame sizes 80 to 200:
- $\hat{U}_{\text{phase-to-phase}} \leq 1500$ V
- $\hat{U}_{\text{phase-to-ground}} \leq 1100$ V

Frame sizes 225 to 315:
- $\hat{U}_{\text{phase-to-phase}} \leq 1600$ V
- $\hat{U}_{\text{phase-to-ground}} \leq 1400$ V

Voltage rise times of $t_s > 0.1$ µs.

In the event of a fault, the motors must be switched over from converter operation to line operation. If converter operation is also required in the event of a fire, this must be ensured through system testing and full acceptance testing by the fan manufacturer.

Drainage holes

Generally available; but closed if ordered according to IP55 degree of protection.

Bearing plates

All bearing plates of types of construction IM B3, IM B5 and IM B14 are cast iron.

For smoke extraction motors, it is also possible to order on request the special types of construction IM B30 (horizontal type of construction) as well as IM V30 and IM V31 (both vertical types of construction) in accordance with EN 60034-7. (clamp mounting, pad mounting, shaft fan mounting)

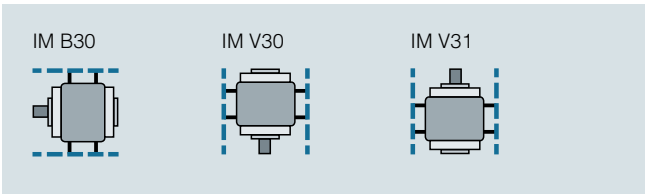

On the motor side, either 3 or 4 radial mounting threads can be provided on the housing or the IM B3 bearing plates at DE and NDE. These can be used to fix the motor centrally inside a pipe or a fan unit.

Connection system

Protruding cable with casing, without terminal box with cover plate or "nozzle cap". The cable length, core ends and diameter depend on the frame size.

Frame size	Rated power	Number of cores	Cross-section	Length	Cable diameter ± 1 mm
	kW		mm^2	m	mm
80 … 112	0.37 … 4	7	1.5	1	12
132	3 … 7.5	7	1.5	1.5	12
160	7.5 … 18	7	4	1.5	16
180 … 200	15 … 37	7	10	1.5	25
225 … 280	30 … 55	7	10	2.5	25
280 … 315	75 … 90	2 × 4	16	2.5	24
315	110 … 132	2 × 4	3 × 35 + 25	2.5	33
315	160 … 200	2 × 4	3 × 50 + 25	2.5	38

Special versions of connecting cables are available on request.

Location of the terminal box base

Frame sizes 80 to 315:
- At top and at drive end (DE) as standard
  16th position of the Article No. digit 4
- Terminal box base right
  16th position of the Article No. digit 5
- Terminal box base left
  16th position of the Article No. digit 6
- Terminal box base at bottom (not possible for IM B3)
  16th position of the Article No. digit 7

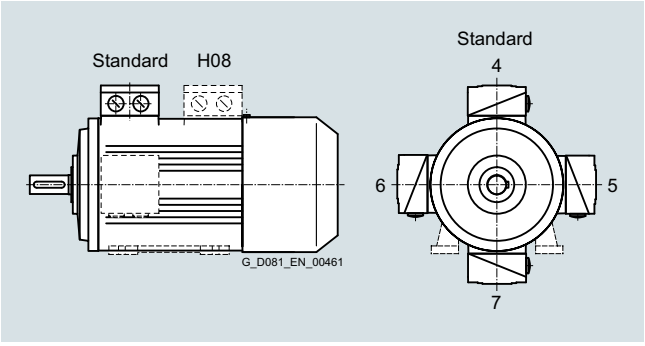

Location of terminal box base with the corresponding digits in the 16th position of Article No. 0° position of cable outlet

Optional: Terminal box base at NDE
– Order code **H08**

When the terminal box base is rotated to the non-drive end of the motor, it is important to note that dimensions "C" and "CA" will not comply with the values specified in EN 50347. Please request a dimension drawing.

Direction of cable outlet

- Frame sizes 80 to 160 (aluminum):
  Further routing of the connecting cable only in radial direction with respect to the position of the terminal box base.
- Frame sizes 180 to 315 (cast iron):
  Further routing of the connecting cable towards NDE
  Option **R11** with respect to the position of the terminal box base.
  Other options are also possible after **R12** or **R13**.
  R13 = Cable entry in 0° position as shown in diagram.

© Siemens AG 2018

Technical specifications (continued)

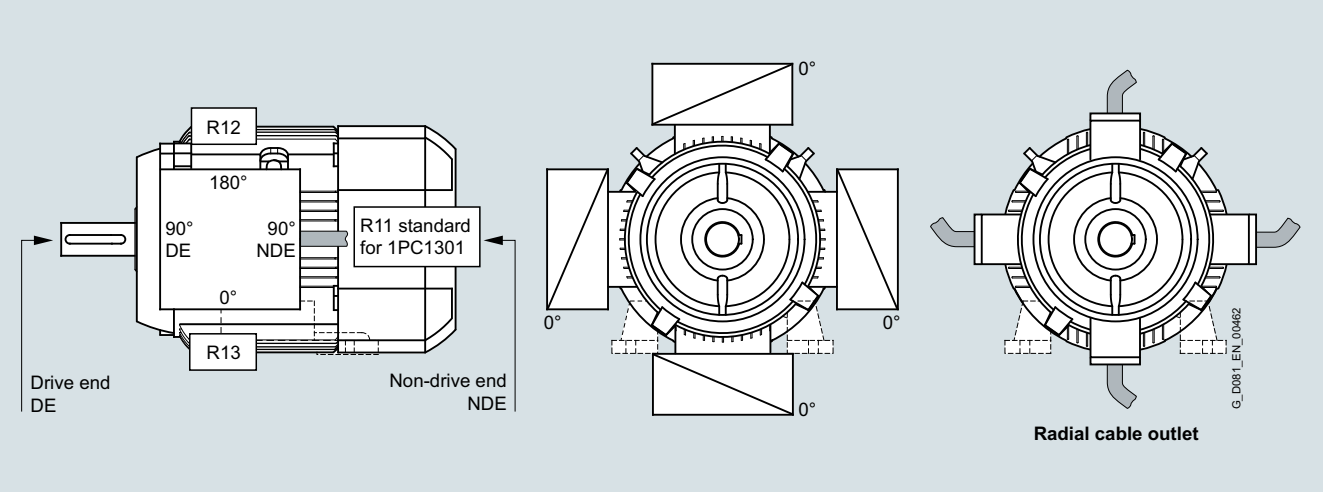

Location of the cable entries with corresponding order codes. The equipment is grounded with a protruding cable.

Bearings, grease

Special bearing systems are used.

Deep-groove bearings of series 60, 62 or 63 without play are used depending on the individual frame sizes.

The located bearing is generally at the drive-end (DE).

The nominal bearing lifetime $L_{10\,h}$ (fan drive) is at least 20 000 hours at full rated load.

The motors of frame sizes 80 to 250 generally have bearings that are greased for life.

Paint finish

The motors are shipped as standard with a two-component paint finish (worldwide) in the color RAL 7030.

Required minimum cooling air flow in standard duty

Required cooling air flow for 1PC1300/1PC1303 motors			
Frame size	No. of poles		
	2 m^3/min	4 m^3/min	6 m^3/min
80	1.36	0.66	0.42
90	2.66	1.34	0.87
100	3.8	2.1	1.5
112	5.0	2.9	1.9
132	6.3	4.6	3.1
160	10.9	6.7	5

Required cooling air flow for 1PC1301/1PC1304 motors			
Frame size	No. of poles		
	2 m^3/min	4 m^3/min	6 m^3/min
180	12.4	7.8	5.2
200	14.3	10.6	7.9
225	21.5	18.5	15
250	30	20	20
280	26.5	32	24
315	40	40	30

In the motor version without an integrated fan (with order code **F90**), the motor is located in the airflow of the driven fan that must drive the minimum cooling airflow over the motor housing. The operating temperature of the motor can be reduced at higher air flow rates. The decisive factor for the effectiveness of the increased cooling airflow is the actual increase in the winding temperature during rated operation.

Admissible loading on the shaft extension

The values specified in the table "Admissible loading on the shaft extension" are the tested and approved maximum values (test duration two hours, temperature in case of fire 300 °C).

In standard duty at coolant temperatures up to CT 40 °C, a bearing lifetime $L_{10\,h}$ > 20 000 hours is achieved.

The values apply to all horizontal mounting positions and to all vertical mounting positions with shaft pointing downwards.

Please inquire in the case of:

- Higher force pairings
- Motors with more poles
- Vertical arrangement, depending on the rotor mass and mounting location (shaft pointing downwards or shaft pointing upwards) of the smoke extraction motor. If necessary, higher forces can be approved.

© Siemens AG 2018

Technical specifications (continued)

Admissible loading on the shaft extension in the event of fire

Frame size	Bearings DE	Type of loading on shaft		Horizontal shaft						Shaft pointing vertically downwards					
				2-pole		4-pole		6-pole		2-pole		4-pole		6-pole	
		No.		F_R N	$F_{A\ ten}$ N	F_R N	$F_{A\ ten}$ N	F_R N	$F_{A\ ten}$ N	F_R N	$F_{A\ ten}$ N	F_R N	$F_{A\ ten}$ N	F_R N	$F_{A\ ten}$ N
80	6204	1	Radial force	400	0	490	0	540	0	360	0	450	0	540	0
		2	Radial force + axial tensile force	150	130	170	170	190	200	40	172	40	225	40	275
		3	Axial tensile force	0	215	0	265	0	320	0	197	0	250	0	300
90	6205	1	Radial force	650	0	730	0	795	0	590	0	730	0	795	0
		2	Radial force + axial tensile force	250	205	280	260	310	305	100	259	100	330	100	390
		3	Axial tensile force	0	343	0	415	0	480	0	310	0	384	0	450
100	6206	1	Radial force	890	0	1000	0	1080	0	820	0	1000	0	1080	0
		2	Radial force + axial tensile force	400	265	500	325	600	345	300	265	300	385	300	455
		3	Axial tensile force	0	490	0	600	0	675	0	432	0	540	0	625
112	6206	1	Radial force	870	0	980	0	1055	0	760	0	970	0	1055	0
		2	Radial force + axial tensile force	400	252	500	310	600	330	250	260	250	380	250	450
		3	Axial tensile force	0	478	0	595	0	675	0	403	0	510	0	590
132	6208	1	Radial force	1070	0	1415	0	1530	0	810	0	1060	0	1220	0
		2	Radial force + axial tensile force	450	315	550	450	650	480	250	300	250	520	250	585
		3	Axial tensile force	0	580	0	775	0	850	0	450	0	640	0	820
160	6209	1	Radial force	1440	0	1630	0	1760	0	1210	0	1580	0	1780	0
		2	Radial force + axial tensile force	700	450	800	570	900	650	500	335	500	525	500	665
		3	Axial tensile force	0	824	0	1015	0	1140	0	620	0	790	0	920
180	6210	1	Radial force	1540	0	1750	0	1900	0	1020	0	1400	0	1670	0
		2	Radial force + axial tensile force	770	430	900	545	1000	630	550	218	550	420	550	575
		3	Axial tensile force	0	815	0	1040	0	1183	0	453	0	733	0	875
200	6212	1	Radial force	2050	0	2380	0	2620	0	1450	0	1700	0	2090	0
		2	Radial force + axial tensile force	1200	770	1350	970	1500	1075	500	460	500	750	500	1600
		3	Axial tensile force	0	1350	0	1650	0	1875	0	720	0	1040	0	1905
225	6213	1	Radial force	2460	0	2720	0	2970	0	1910	0	2450	0	2900	0
		2	Radial force + axial tensile force	1370	900	1500	1095	1700	1200	500	660	500	1000	500	1250
		3	Axial tensile force	0	1560	0	1910	0	2170	0	920	0	1290	0	1520
250	6215	1	Radial force	2770	0	3230	0	3500	0	1490	0	2230	0	2700	0
		2	Radial force + axial tensile force	1400	840	1600	1095	1800	1340	500	460	500	815	500	1080
		3	Axial tensile force	0	1500	0	1865	0	2130	0	710	0	1090	0	1375
280	6315 (2-pole), 6317 (4, 6-pole)	1	Radial force	3180	0	5000	0	5500	0	3000	0	5600	0	6100	0
		2	Radial force + axial tensile force	1700	1820	2000	2000	2300	2200	600	1085	600	2300	600	2750
		3	Axial tensile force	0	2630	0	3050	0	3500	0	1380	0	2600	0	3100
315	6316 (2-pole), 6319 (4, 6-pole)	1	Radial force	3470	0	5300	0	5900	0	1000	0	3600	0	3850	0
		2	Radial force + axial tensile force	1750	2200	2000	2170	2300	2530	200	363	1000	1150	1000	1610
		3	Axial tensile force	0	3000	0	3080	0	3560	0	463	0	1690	0	2100

Note:

In the event of a fault (fire), the reduced loads given above must be observed and ensured by appropriate measures in the ventilation system.

Under normal operating conditions (CT 40 °C), the admissible loads specified in part 1 of the catalog under "Bearings and lubrication" must be complied with.

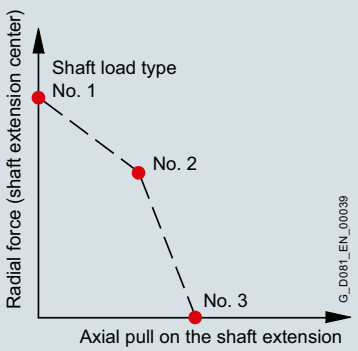

Load types

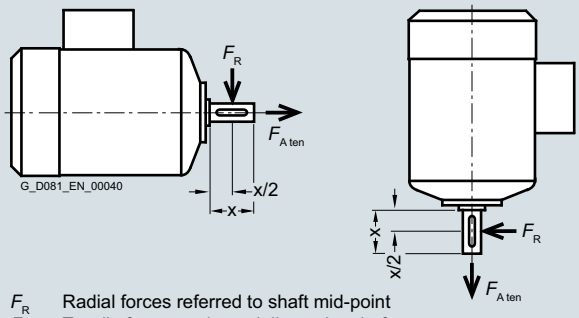

Forces on shaft extension

© Siemens AG 2018

Article number code

Selection and ordering data

The article number consists of a combination of digits and letters and is divided into three hyphenated blocks to provide a better overview, e.g.:
1PC1301-1EB22-2FB4-Z
L22

The first block (positions 1 to 7) identifies the motor type. The second block (positions 8 to 12) defines the motor frame size and length, the number of poles and in some cases the frequency/voltage. In the third block (positions 13 to 16), the frequency/voltage, type of construction and further design features are encoded.

For deviations in the second and third block from the catalog codes either **Z** or **90** should be used as appropriate.

Ordering data:

- Complete Article No. and order code(s) or plain text
- If a quotation has been requested, please specify the quotation number in addition to the Article No.
- When ordering a complete motor as a spare part, please specify the works serial No. for the previously supplied motor as well as the Article No.

Structure of the Article No.:		Position:	1	2	3	4	5	6	7	-	8	9	10	11	12	-	13	14	15	16	
1st to 5th position: Digit, letter, letter, digit, digit	Self-ventilated smoke extraction motors with IE2 High Efficiency (for forced-air cooled version specify Article No. with -Z and order code F90)		**1**	**P**	**C**	**1**	**3**														
6th to 7th position: 2 digits	Aluminum housing, IE2, single-speed							**0**	**0**												
	Cast-iron housing, IE2, single-speed							**0**	**1**												
	Aluminum housing, IE3, single-speed							**0**	**3**												
	Cast-iron housing, IE3, single-speed							**0**	**4**												
8th, 9th and 11th position: Digit, letter, digit	**Motor frame size** (frame size as a combination of shaft height and overall length, encoded)										**0** ... **3**	**A** ... **E**		**0** ... **6**							
10th position: Letter	**No. of poles** A: 2-pole, B: 4-pole, C: 6-pole												**A** ... **C**								
12th and 13th position: 2 digits	**Voltage, circuit and frequency** (encoded with two digits, 9-0 requires order code M.. (e.g. M1Y))														**0** ... **9**		**0** ... **7**				
14th position: Letter	**Type of construction** (encoded with A ... Z; Z requires order code P.. (e.g. P3A))																	**A** ... **Z**			
15th position: Letter	**Motor protection** (encoded with A ... D)																		**A** ... **D**		
16th position: Digit	**Terminal box position** 4: Terminal box top, 5: Terminal box right, 6: Terminal box left, 7: Terminal box bottom																			**4** ... **7**	
	Special order versions: encoded – additional order code required; not encoded – additional plain text required																				- **Z**

Ordering example

Selection criteria	Requirement	Structure of the Article No.
Motor type 1PC1304	Self-ventilated smoke extraction motor, cast-iron version, with IE3 High Efficiency, IP55 degree of protection	1PC1304-■■■■■-■■■■
Motor frame size/No. of poles/Speed	180 M/4-pole/1500 rpm	**1PC1304-**1EB2■-■■■■
Rated power	18.5 kW	
Voltage and frequency	230 VΔ/400 VY, 50 Hz	**1PC1304-1EB2**2-2■■■
Type of construction with special version	IM B5	**1PC1304-1EB22-2F**■■
Motor protection	Motor protection with 1 or 3 PTC thermistors or PTC thermistors – for tripping (2 terminals)	**1PC1304-1EB22-2FB**■
Terminal box position	Terminal box at top	**1PC1304-1EB22-2FB4**
Special version	Bearing design for increased cantilever forces	**1PC1304-1EB22-2FB4-Z** L22

© Siemens AG 2018

Selection and ordering data

P_{rated}, 50 Hz	P_{rated}, 60 Hz	Frame size	Operating values at rated power: n_{rated}, 50 Hz	T_{rated}, 50 Hz	η_{rated}, 50 Hz, 4/4	η_{rated}, 50 Hz, 3/4	η_{rated}, 50 Hz, 2/4	cos-φ_{rated}, 50 Hz, 4/4	I_{rated}, 50 Hz, 400 V	T_{LR}/T_{rated}	I_{LR}/I_{rated}	T_B/T_{rated}	L_{pfA}, 50 Hz	L_{WA}, 50 Hz	**Aluminum series 1PC1303** Article No.	$m_{IM\ B3}$	J
kW	**kW**	**FS**	rpm	Nm	%	%	%		A				dB(A)	dB(A)		kg	kgm²
• Cooling: self-ventilated (IC411) or with order code F90 forced-air cooled without external fan and fan cover (IC418) • Efficiency according to IEC 60034-30: IE3 Premium Efficiency, service factor (SF) 1.15 • Insulation: Thermal class 180 (temperature class H), IP55 degree of protection, utilization in accordance with thermal class 130 (temperature class B)																	
2-pole: 3000 rpm at 50 Hz																	
0.75	**–**	**80 M**	2850	2.5	80.7	82.2	81.9	0.86	1.56	2.6	6.2	3.0	60	71	**1PC1303-0DA2■-■■■■**	11	0.0011
1.1	**–**	**80 M**	2885	3.6	82.7	83.9	83.1	0.85	2.25	3.0	7.1	3.3	60	71	**1PC1303-0DA3■-■■■■**	12	0.0013
1.5	**–**	**90 S**	2910	4.9	84.2	84.6	83.2	0.86	3.00	2.7	8.1	4.2	65	77	**1PC1303-0EA0■-■■■■**	15	0.0021
2.2	**–**	**90 L**	2910	7.2	85.9	86.8	86.1	0.88	4.20	2.6	8.3	4.0	65	77	**1PC1303-0EA4■-■■■■**	19	0.0031
3	**–**	**100 L**	2920	9.8	87.1	88.0	87.5	0.88	5.60	2.8	8.0	4.3	67	79	**1PC1303-1AA4■-■■■■**	26	0.0054
4	**–**	**112 M**	2945	13	88.1	89.1	88.7	0.90	7.30	1.8	8.2	3.5	69	81	**1PC1303-1BA2■-■■■■**	34	0.012
5.5	**–**	**132 S**	2950	18	89.2	90.0	89.7	0.90	9.90	1.8	7.4	3.6	68	80	**1PC1303-1CA0■-■■■■**	43	0.024
7.5	**–**	**132 S**	2950	24	90.1	91.0	91.0	0.92	13.1	1.9	8.3	3.9	68	80	**1PC1303-1CA1■-■■■■**	57	0.031
11	**–**	**160 M**	2955	36	91.2	91.0	89.5	0.89	19.6	2.4	7.9	3.8	70	82	**1PC1303-1DA2■-■■■■**	75	0.053
15	**–**	**160 M**	2960	48	91.9	92.1	91.2	0.87	27.0	2.7	8.7	4.3	70	82	**1PC1303-1DA3■-■■■■**	84	0.061
18.5	**–**	**160 L**	2955	60	92.4	92.8	92.4	0.90	32.0	2.8	9.0	4.2	70	82	**1PC1303-1DA4■-■■■■**	94	0.068
4-pole: 1500 rpm at 50 Hz																	
0.55	**–**	**80 M**	1440	3.6	80.8	81.1	79.3	0.78	1.26	2.1	5.9	3.1	53	64	**1PC1303-0DB2■-■■■■**	11	0.0021
0.75	**–**	**80 M**	1450	4.9	82.5	82.3	79.9	0.75	1.75	2.7	7.1	3.9	53	64	**1PC1303-0DB3■-■■■■**	14	0.0029
1.1	**–**	**90 S**	1440	7.3	84.1	84.7	83.4	0.78	2.40	2.9	6.9	3.6	56	68	**1PC1303-0EB0■-■■■■**	16	0.0036
1.5	**–**	**90 L**	1445	10	85.3	85.9	84.9	0.80	3.15	2.7	7.2	3.6	56	68	**1PC1303-0EB4■-■■■■**	19	0.0049
2.2	**–**	**100 L**	1465	14	86.7	87.3	86.4	0.83	4.40	2.1	7.6	3.6	60	72	**1PC1303-1AB4■-■■■■**	30	0.014
3	**–**	**100 L**	1460	20	87.7	88.4	88.2	0.83	5.90	2.3	7.3	3.7	60	72	**1PC1303-1AB5■-■■■■**	30	0.014
4	**–**	**112 M**	1460	26	88.6	89.2	88.6	0.82	7.90	2.4	7.1	3.7	58	70	**1PC1303-1BB2■-■■■■**	34	0.017
5.5	**–**	**132 S**	1470	36	89.6	90.1	89.5	0.84	10.5	2.1	7.2	3.4	64	76	**1PC1303-1CB0■-■■■■**	59	0.046
7.5	**–**	**132 M**	1470	49	90.4	91.1	90.8	0.84	14.3	2.4	7.4	3.5	64	76	**1PC1303-1CB2■-■■■■**	64	0.046
11	**–**	**160 M**	1475	71	91.4	91.9	91.4	0.84	20.5	2.2	6.9	3.2	65	77	**1PC1303-1DB2■-■■■■**	83	0.083
15	**–**	**160 L**	1475	97	92.1	92.3	91.5	0.82	28.5	2.5	8.5	3.8	65	77	**1PC1303-1DB4■-■■■■**	100	0.099

Voltages	Motor protection	Version				Order code
Cover plate rotatable 4 x 90°						
50 Hz 230 VΔ/400 VY	Any	**Standard**	**2**	**2**		–
50 Hz 400 VΔ/690 VY	Any	**Standard**	**3**	**4**		–
50 Hz 500 VY	Any	Without additional charge	**2**	**7**		–
50 Hz 500 VΔ	Any	Without additional charge	**4**	**0**		–
For other voltages [1] and more information, see page 6/15			**9**	**0**		. . .
Types of construction		Version				Order code
Without flange	IM B3 [2]	**Standard**			**A**	–
With flange	IM B5 [2]	With additional charge			**F**	–
With flange	IM B14 [2]	With additional charge			**K**	–
For other types of construction and more information, see from page 6/16					■	. . .
Motor protection		Version				
Cover plate rotatable 4 x 90°						
Without		**Standard**			**A**	
PTC thermistor with 1 or 3 temperature sensors (frame sizes 80, 90 or 100 to 200)		With additional charge			**B**	
For other motor protection and more information, see page 6/19					■	
Terminal box position		Version				
Terminal box at top		**Standard**				**4**
For other terminal box positions and more information, see page 6/20						■

Special versions		Order code(s)
Forced-air cooled motors w/o ext. fan/fan cover (IC418)	**1PC1303-. . . . ■-■■■■-Z**	**F90 +. . .+. . .+. . .**
For options, see from page 6/21	**1PC1303-. . . . ■-■■■■-Z**	**. . .+. . .+. . .+. . .**

[1] Operating values at rated power for 60 Hz possible on request (for 4-pole and 6-pole).

[2] Types derived from IM B3 (IM B6/7/8, IM V6 and IM V5), from IM B5 (IM V3 and IM V1) and from IM B14 (IM V19 and IM V18) are possible, provided that no requirements exist for condensation drainage holes (**H03**) or stamping of the type on the rating plate. The basic type IM B3, IM B5 or IM B14 is stamped as standard on the rating plate. For orders with condensation drainage holes (**H03**), the type must be specified.

© Siemens AG 2018

Selection and ordering data

P_{rated}, 50 Hz	P_{rated}, 60 Hz	Frame size	Operating values at rated power: n_{rated}, 50 Hz	T_{rated}, 50 Hz	η_{rated}, 50 Hz, 4/4	η_{rated}, 50 Hz, 3/4	η_{rated}, 50 Hz, 2/4	cos-φ_{rated}, 50 Hz, 4/4	I_{rated}, 50 Hz, 400 V	T_{LR}/T_{rated}	I_{LR}/I_{rated}	T_B/T_{rated}	L_{pfA}, 50 Hz	L_{WA}, 50 Hz	Cast-iron series 1PC1304 Article No.	$m_{IM\ B3}$	J
kW	kW	FS	rpm	Nm	%	%	%		A				dB(A)	dB(A)		kg	kgm²
• Cooling: self-ventilated (IC411) or with order code F90 forced-air cooled without external fan and fan cover (IC418) • Efficiency according to IEC 60034-30: IE3 Premium Efficiency, service factor (SF) 1.15 • Insulation: Thermal class 180 (temperature class H), IP55 degree of protection, utilization in accordance with thermal class 130 (temperature class B)																	
2-pole: 3000 rpm at 50 Hz																	
22	**–**	**180 M**	2950	71	92.7	93.2	92.9	0.89	38.5	2.3	7.5	3.5	67	80	**1PC1304-1EA2■-■■■■**	169	0.08
30	**–**	**200 L**	2955	97	93.3	93.5	92.9	0.87	53.0	2.5	7.0	3.3	67	80	**1PC1304-2AA4■-■■■■**	222	0.13
37	**–**	**200 L**	2955	120	93.7	94.2	94.0	0.88	65.0	2.5	7.1	3.2	67	80	**1PC1304-2AA5■-■■■■**	245	0.16
45	**–**	**225 M**	2960	145	94.0	94.3	94.2	0.89	78.0	2.4	6.9	3.3	73	87	**1PC1304-2BA2■-■■■■**	315	0.26
55	**–**	**250 M**	2975	177	94.3	94.3	93.7	0.89	95.0	2.3	6.7	3.1	73	87	**1PC1304-2CA2■-■■■■**	385	0.46
75	**–**	**280 S**	2975	241	94.7	94.6	93.9	0.89	128	2.4	6.8	3.0	74	88	**1PC1304-2DA0■-■■■■**	510	0.77
90	**–**	**280 M**	2975	289	95.0	94.9	94.4	0.90	152	2.4	7.2	3.1	74	88	**1PC1304-2DA2■-■■■■**	590	0.94
110	**–**	**315 S**	2982	352	95.2	95.2	94.7	0.91	183	2.4	7.1	3.1	75	89	**1PC1304-3AA0■-■■■■**	750	1.4
132	**–**	**315 M**	2982	423	95.4	95.3	95.0	0.91	220	2.5	7.2	3.1	75	89	**1PC1304-3AA2■-■■■■**	880	1.6
160	**–**	**315 L**	2982	512	95.6	95.6	95.1	0.92	265	2.8	7.8	3.3	77	91	**1PC1304-3AA4■-■■■■**	980	1.9
200	**–**	**315 L**	2985	640	95.8	95.8	95.4	0.92	330	2.5	7.2	3.0	77	91	**1PC1304-3AA5■-■■■■**	1150	2.3
4-pole: 1500 rpm at 50 Hz																	
18.5	**–**	**180 M**	1470	120	92.6	93.1	92.9	0.82	35.0	2.5	7.2	3.3	66	73	**1PC1304-1EB2■-■■■■**	170	0.13
22	**–**	**180 L**	1470	143	93.0	93.7	93.6	0.83	41.0	2.3	6.8	3.3	68	75	**1PC1304-1EB4■-■■■■**	180	0.14
30	**–**	**200 L**	1470	195	93.6	94.0	93.7	0.84	55.0	2.6	7.3	3.1	65	72	**1PC1304-2AB5■-■■■■**	240	0.22
37	**–**	**225 S**	1478	239	93.9	94.0	93.9	0.86	66.0	2.5	6.4	2.7	65	78	**1PC1304-2BB0■-■■■■**	285	0.42
45	**–**	**225 M**	1478	291	94.2	94.5	94.7	0.86	80.0	2.6	6.4	2.7	65	78	**1PC1304-2BB2■-■■■■**	320	0.47
55	**–**	**250 M**	1482	354	94.6	94.9	94.8	0.87	96.0	2.5	6.8	2.9	66	79	**1PC1304-2CB2■-■■■■**	420	0.85
75	**–**	**280 S**	1485	482	95.0	95.0	94.7	0.86	133	2.5	6.9	3.0	69	83	**1PC1304-2DB0■-■■■■**	570	1.4
90	**–**	**280 M**	1485	579	95.2	95.1	94.9	0.87	157	2.6	7.2	3.0	70	84	**1PC1304-2DB2■-■■■■**	670	1.7
110	**–**	**315 S**	1488	706	95.4	95.5	95.2	0.87	191	2.6	6.8	2.9	70	84	**1PC1304-3AB0■-■■■■**	760	2.2
132	**–**	**315 M**	1490	846	95.6	95.7	95.7	0.87	230	2.8	7.3	3.0	73	87	**1PC1304-3AB2■-■■■■**	960	2.9
160	**–**	**315 L**	1490	1025	95.8	95.9	95.9	0.87	275	2.9	7.3	3.1	73	87	**1PC1304-3AB4■-■■■■**	990	3.1
200	**–**	**315 L**	1488	1284	96.0	96.1	95.9	0.88	340	3.2	7.4	3.0	73	87	**1PC1304-3AB5■-■■■■**	1190	3.7

Voltages	Version				Order code
Cover plate rotatable 4 x 90°					
50 Hz 230 VΔ/400 VY	**Standard**	**2**	**2**		–
50 Hz 400 VΔ/690 VY	**Standard**	**3**	**4**		–
50 Hz 500 VY	Without additional charge	**2**	**7**		–
50 Hz 500 VΔ	Without additional charge	**4**	**0**		–
For other voltages [1] and more information, see page 6/15		**9**	**0**		. . .
Types of construction	Version				Order code
Without flange IM B3 [2]	**Standard**			**A**	–
With flange IM B5 [2]	With additional charge			**F**	–
For other types of construction and more information, see page 6/18				■	. . .
Motor protection	Version				
Cover plate rotatable 4 x 90°					
Without	**Standard**			**A**	
1 or 3 PTC thermistors – for tripping (2 terminals)	With additional charge			**B**	
For other motor protection and more information, see page 6/19				■	
Terminal box position	Version				
Terminal box at top	**Standard**			**4**	
For other terminal box positions and more information, see page 6/20				■	
Special versions					Order code(s)
Forced-air cooled motors w/o ext. fan/fan cover (IC418)		**1PC1304-. . . .■-■■■■**		**-Z**	**F90 +. . .+. . .+. . .**
For options, see from page 6/23		**1PC1304-. . . .■-■■■■**		**-Z**	**. . .+. . .+. . .+. . .**

1) Operating values at rated power for 60 Hz possible on request (for 4-pole and 6-pole).

2) Types derived from IM B3 (IM B6/7/8, IM V6 and IM V5) and from IM B5 (IM V3 and IM V1) are possible, provided that no requirement exists for stamping of the type on the rating plate. The basic type IM B3 or IM B5 is stamped as standard on the rating plate. If mounted in a different position, the position must be specified to ensure that the condensation drainage holes are positioned correctly.

© Siemens AG 2018

Selection and ordering data

P_{rated}, 50 Hz	P_{rated}, 60 Hz	Frame size	Operating values at rated power: n_{rated}, 50 Hz	T_{rated}, 50 Hz	η_{rated}, 50 Hz, 4/4	η_{rated}, 50 Hz, 3/4	η_{rated}, 50 Hz, 2/4	cos-φ_{rated}, 50 Hz, 4/4	I_{rated}, 50 Hz, 400 V	T_{LR}/T_{rated}	I_{LR}/I_{rated}	T_B/T_{rated}	L_{pfA}, 50 Hz	L_{WA}, 50 Hz	Aluminum series 1PC1300 Article No.	$m_{IM\ B3}$	J
kW	kW	FS	rpm	Nm	%	%	%		A				dB(A)	dB(A)		kg	kgm²
• Cooling: self-ventilated (IC411) or with order code F90 forced-air cooled without external fan and fan cover (IC418) • Efficiency according to IEC 60034-30: IE2 High Efficiency, service factor (SF) 1.15 • Insulation: Thermal class 180 (temperature class H), IP55 degree of protection, utilization in accordance with thermal class 130 (temperature class B)																	
2-pole: 3000 rpm at 50 Hz																	
0.75	–	80 M	2805	2.6	77.4	80.0	80.1	0.84	1.67	1.9	4.9	2.3	60	71	1PC1300-0DA2■-■■■■	9	0.00080
1.1	–	80 M	2835	3.7	79.6	81.3	80.9	0.83	2.40	2.7	6.0	3.1	60	71	1PC1300-0DA3■-■■■■	11	0.0011
1.5	–	90 S	2885	5.0	81.3	81.7	79.7	0.84	3.15	2.7	6.9	3.6	65	77	1PC1300-0EA0■-■■■■	13	0.0017
2.2	–	90 L	2890	7.3	83.2	83.7	82.0	0.85	4.50	2.5	7.1	3.7	65	77	1PC1300-0EA4■-■■■■	15	0.0021
3	–	100 L	2905	9.9	84.6	85.5	84.6	0.84	6.10	2.3	7.0	3.3	67	79	1PC1300-1AA4■-■■■■	21	0.0044
4	–	112 M	2945	13	85.8	86.2	85.1	0.85	7.90	2.1	8.0	3.6	69	81	1PC1300-1BA2■-■■■■	27	0.0092
5.5	–	132 S	2950	18	87.0	88.0	87.6	0.87	10.5	1.8	6.6	2.9	68	80	1PC1300-1CA0■-■■■■	39	0.020
7.5	–	132 S	2950	24	88.1	88.5	87.6	0.87	14.1	1.8	6.7	2.9	68	80	1PC1300-1CA1■-■■■■	43	0.024
11	–	160 M	2955	36	89.4	89.3	88.0	0.87	20.5	2.1	7.4	3.2	70	82	1PC1300-1DA2■-■■■■	67	0.045
15	–	160 M	2955	48	90.3	90.7	90.0	0.88	27.0	2.4	7.6	3.4	70	82	1PC1300-1DA3■-■■■■	75	0.053
18.5	–	160 L	2955	60	90.9	91.2	90.6	0.88	33.5	2.9	7.9	3.6	70	82	1PC1300-1DA4■-■■■■	84	0.061
4-pole: 1500 rpm at 50 Hz																	
0.55	–	80 M	1440	3.6	77.1	76.8	73.7	0.74	1.39	2.2	5.3	3.1	53	64	1PC1300-0DB2■-■■■■	10	0.0017
0.75	–	80 M	1440	5.0	79.6	79.9	77.5	0.76	1.79	2.2	5.6	3.1	53	64	1PC1300-0DB3■-■■■■	11	0.0021
1.1	–	90 S	1425	7.4	81.4	81.8	80.0	0.78	2.50	2.3	5.6	2.9	56	68	1PC1300-0EB0■-■■■■	13	0.0028
1.5	–	90 L	1435	10	82.8	83.5	82.2	0.79	3.30	2.6	6.4	3.4	56	68	1PC1300-0EB4■-■■■■	16	0.0036
2.2	–	100 L	1455	14	84.3	85.1	84.2	0.81	4.65	2.1	6.9	3.3	60	72	1PC1300-1AB4■-■■■■	21	0.0086
3	–	100 L	1455	20	85.5	86.4	85.6	0.82	6.20	2.0	6.9	3.1	60	72	1PC1300-1AB5■-■■■■	25	0.011
4	–	112 M	1460	26	86.6	87.3	86.4	0.81	8.20	2.5	7.1	3.2	58	70	1PC1300-1BB2■-■■■■	29	0.014
5.5	–	132 S	1465	36	87.7	88.4	87.6	0.80	10.3	2.3	6.9	2.9	64	76	1PC1300-1CB0■-■■■■	42	0.027
7.5	–	132 M	1465	49	88.7	89.8	89.8	0.83	14.7	2.3	6.9	2.9	64	76	1PC1300-1CB2■-■■■■	49	0.034
11	–	160 M	1470	71	89.8	91.0	90.9	0.85	21.0	2.1	6.7	2.8	65	77	1PC1300-1DB2■-■■■■	71	0.065
15	–	160 L	1475	97	90.6	91.2	90.8	0.85	28.0	2.3	7.3	3.0	65	77	1PC1300-1DB4■-■■■■	83	0.083

Voltages	Motor protection	Version			Order code
Cover plate rotatable 4 x 90°					
50 Hz 230 VΔ/400 VY	Any	**Standard**	2	2	–
50 Hz 400 VΔ/690 VY	Any	**Standard**	3	4	–
50 Hz 500 VY	Any	Without additional charge	2	7	–
50 Hz 500 VΔ	Any	Without additional charge	4	0	–
For other voltages [1] and more information, see page 6/15			9	0	. . .

Types of construction		Version		Order code
Without flange	IM B3 [2]	**Standard**	A	–
With flange	IM B5 [2]	With additional charge	F	–
With flange	IM B14 [2]	With additional charge	K	–
For other types of construction and more information, see from page 6/16			■	. . .

Motor protection	Version		
Cover plate rotatable 4 x 90°			
Without	**Standard**	A	
PTC thermistor with 1 or 3 temperature sensors (frame sizes 80, 90 or 100 to 200)	With additional charge	B	
For other motor protection and more information, see page 6/19		■	

Terminal box position	Version		
Terminal box at top	**Standard**	4	
For other terminal box positions and more information, see page 6/20		■	

Special versions			Order code(s)
Forced-air cooled motors w/o ext. fan/fan cover (IC418)	1PC1300-. . . . ■-■■■■	-Z	F90 +. . .+. . .+. . .
For options, see from page 6/21	1PC1300-. . . . ■-■■■■	-Z	. . .+. . .+. . .+. . .

[1] Operating values at rated power for 60 Hz possible on request (for 4-pole and 6-pole).

[2] Types derived from IM B3 (IM B6/7/8, IM V6 and IM V5), from IM B5 (IM V3 and IM V1) and from IM B14 (IM V19 and IM V18) are possible, provided that no requirements exist for condensation drainage holes (**H03**) or stamping of the type on the rating plate. The basic type IM B3, IM B5 or IM B14 is stamped as standard on the rating plate. For orders with condensation drainage holes (**H03**), the type must be specified.

© Siemens AG 2018

Selection and ordering data (continued)

P_{rated}, 50 Hz	P_{rated}, 60 Hz	Frame size	Operating values at rated power: n_{rated}, 50 Hz	T_{rated}, 50 Hz	η_{rated}, 50 Hz, 4/4	η_{rated}, 50 Hz, 3/4	η_{rated}, 50 Hz, 2/4	cos-φ_{rated}, 50 Hz, 4/4	I_{rated}, 50 Hz, 400 V	T_{LR}/T_{rated}	I_{LR}/I_{rated}	T_B/T_{rated}	L_{pfA}, 50 Hz	L_{WA}, 50 Hz	Aluminum series 1PC1300 Article No.	$m_{IM\ B3}$	J
kW	kW	FS	rpm	Nm	%	%	%		A				dB(A)	dB(A)		kg	kgm²
• Cooling: self-ventilated (IC411) or with order code F90 forced-air cooled without external fan and fan cover (IC418) • Efficiency according to IEC 60034-30: IE2 High Efficiency, service factor (SF) 1.15 • Insulation: Thermal class 180 (temperature class H), IP55 degree of protection, utilization in accordance with thermal class 130 (temperature class B)																	
6-pole: 1000 rpm at 50 Hz																	
0.37	–	**80 M**	925	3.8	67.6	67.9	64.4	0.69	1.14	2.1	4.0	2.4	42	53	**1PC1300-0DC2■-■■■■**	9	0.0017
0.55	–	**80 M**	935	5.6	73.1	73.8	70.8	0.66	1.65	2.5	4.4	2.9	42	53	**1PC1300-0DC3■-■■■■**	12	0.0025
0.75	–	**90 S**	935	7.7	75.9	77.5	76.4	0.73	1.95	1.7	4.0	2.2	43	55	**1PC1300-0EC0■-■■■■**	13	0.0030
1.1	–	**90 L**	935	11	78.1	79.3	77.7	0.70	2.90	2.2	4.4	2.6	43	55	**1PC1300-0EC4■-■■■■**	16	0.0040
1.5	–	**100 L**	970	15	79.8	80.5	79.0	0.73	3.70	2.0	5.4	2.8	59	71	**1PC1300-1AC4■-■■■■**	25	0.011
2.2	–	**112 M**	965	22	81.8	82.7	81.7	0.75	5.20	2.0	5.0	2.8	62	74	**1PC1300-1BC2■-■■■■**	29	0.014
3	–	**132 S**	970	30	83.3	83.4	81.0	0.72	7.20	1.6	5.0	2.5	63	75	**1PC1300-1CC0■-■■■■**	38	0.024
4	–	**132 M**	970	39	84.6	85.5	84.3	0.75	9.10	1.6	5.0	2.3	63	75	**1PC1300-1CC2■-■■■■**	43	0.029
5.5	–	**132 M**	970	54	86.0	87.1	86.4	0.76	12.1	1.9	5.6	2.6	63	75	**1PC1300-1CC3■-■■■■**	52	0.037
7.5	–	**160 M**	975	73	87.2	87.9	87.2	0.74	16.8	1.9	4.7	2.2	67	79	**1PC1300-1DC2■-■■■■**	77	0.075
11	–	**160 L**	975	108	88.7	89.7	89.3	0.76	23.5	1.9	4.8	2.2	67	79	**1PC1300-1DC4■-■■■■**	93	0.098

Voltages	Version			Order code
Cover plate rotatable 4 x 90°				
50 Hz 230 VΔ/400 VY	**Standard**	**2**	**2**	–
50 Hz 400 VΔ/690 VY	**Standard**	**3**	**4**	–
50 Hz 500 VY	Without additional charge	**2**	**7**	–
50 Hz 500 VΔ	Without additional charge	**4**	**0**	–
For other voltages [1] and more information, see page 6/15		**9**	**0**	. . .

Types of construction		Version		Order code
Without flange	IM B3 [2]	**Standard**	**A**	–
With flange	IM B5 [2]	With additional charge	**F**	–
With flange	IM B14 [2]	With additional charge	**K**	–
For other types of construction and more information, see from page 6/16			■	. . .

Motor protection	Version		
Cover plate rotatable 4 x 90°			
Without	**Standard**	**A**	
PTC thermistor with 1 or 3 temperature sensors (frame sizes 80, 90 or 100 to 200)	With additional charge	**B**	
For other motor protection and more information, see page 6/19		■	

Terminal box position	Version		
Terminal box at top	**Standard**	**4**	
For other terminal box positions and more information, see page 6/20		■	

Special versions		Order code(s)
Forced-air cooled motors w/o ext. fan/fan cover (IC418)	**1PC1300-. . . . ■-■■■■-Z**	**F90 +. . .+. . .+. . .**
For options, see from page 6/21	**1PC1300-. . . . ■-■■■■-Z**	. . .+. . .+. . .+. . .

[1] Operating values at rated power for 60 Hz possible on request (for 4-pole and 6-pole).

[2] Types derived from IM B3 (IM B6/7/8, IM V6 and IM V5), from IM B5 (IM V3 and IM V1) and from IM B14 (IM V19 and IM V18) are possible, provided that no requirements exist for condensation drainage holes (**H03**) or stamping of the type on the rating plate. The basic type IM B3, IM B5 or IM B14 is stamped as standard on the rating plate. For orders with condensation drainage holes (**H03**), the type must be specified.

© Siemens AG 2018

Selection and ordering data

P_{rated}, 50 Hz	P_{rated}, 60 Hz	Frame size	Operating values at rated power: n_{rated}, 50 Hz	T_{rated}, 50 Hz	η_{rated}, 50 Hz, 4/4	η_{rated}, 50 Hz, 3/4	η_{rated}, 50 Hz, 2/4	cos-φ_{rated}, 50 Hz, 4/4	I_{rated}, 50 Hz, 400 V	T_{LR}/T_{rated}	I_{LR}/I_{rated}	T_B/T_{rated}	L_{pfA}, 50 Hz	L_{WA}, 50 Hz	Cast-iron series 1PC1301 Article No.	$m_{IM\ B3}$	J
kW	kW	FS	rpm	Nm	%	%	%		A				dB(A)	dB(A)		kg	kgm²
• Cooling: self-ventilated (IC411) or with order code F90 forced-air cooled without external fan and fan cover (IC418) • Efficiency according to IEC 60034-30: IE2 High Efficiency, service factor (SF) 1.15 • Insulation: Thermal class 180 (temperature class H), IP55 degree of protection, utilization in accordance with thermal class 130 (temperature class B)																	
2-pole: 3000 rpm at 50 Hz																	
22	**–**	**180 M**	2940	71	91.3	91.6	90.9	0.87	40.0	2.7	7.4	3.6	77	84	**1PC1301-1EA2■-■■■■**	145	0.069
30	**–**	**200 L**	2960	97	92.0	92.1	91.5	0.87	54.0	2.5	6.9	3.3	78	85	**1PC1301-2AA4■-■■■■**	200	0.13
37	**–**	**200 L**	2960	119	92.5	92.7	92.1	0.88	66.0	2.7	7.4	3.5	78	85	**1PC1301-2AA5■-■■■■**	225	0.15
45	**–**	**225 M**	2965	145	92.9	92.3	92.3	0.88	79.0	2.7	7.8	3.7	76	89	**1PC1301-2BA2■-■■■■**	295	0.23
55	**–**	**250 M**	2970	177	93.2	93.0	92.1	0.88	97.0	2.3	6.8	3.1	76	89	**1PC1301-2CA2■-■■■■**	360	0.40
75	**–**	**280 S**	2978	240	93.8	93.4	92.2	0.86	134	2.5	7.2	3.2	76	89	**1PC1301-2DA0■-■■■■**	490	0.71
90	**–**	**280 M**	2975	289	94.1	94.0	93.3	0.88	157	2.5	7.1	3.1	76	89	**1PC1301-2DA2■-■■■■**	530	0.83
110	**–**	**315 S**	2982	352	94.3	94.0	93.1	0.90	187	2.4	7.3	3.0	77	91	**1PC1301-3AA0■-■■■■**	720	1.3
132	**–**	**315 M**	2982	423	94.6	94.6	94.0	0.91	220	2.4	7.2	3.1	77	91	**1PC1301-3AA2■-■■■■**	880	1.6
160	**–**	**315 L**	2982	512	94.8	94.7	94.1	0.92	265	2.3	7.0	3.1	80	95	**1PC1301-3AA4■-■■■■**	930	1.8
200	**–**	**315 L**	2982	640	95.0	95.2	94.8	0.92	330	2.5	7.3	3.0	80	95	**1PC1301-3AA5■-■■■■**	1130	2.2
4-pole: 1500 rpm at 50 Hz																	
18.5	**–**	**180 M**	1465	121	91.2	92.0	91.9	0.84	35.0	2.5	7.2	3.4	61	74	**1PC1301-1EB2■-■■■■**	160	0.12
22	**–**	**180 L**	1465	143	91.6	92.2	91.9	0.84	41.5	2.6	7.3	3.5	69	76	**1PC1301-1EB4■-■■■■**	170	0.13
30	**–**	**200 L**	1470	195	92.3	92.8	92.5	0.84	56.0	2.5	6.7	3.3	70	77	**1PC1301-2AB5■-■■■■**	230	0.20
37	**–**	**225 S**	1470	240	92.7	93.0	93.0	0.88	65.0	2.3	6.6	2.9	66	79	**1PC1301-2BB0■-■■■■**	280	0.42
45	**–**	**225 M**	1475	291	93.1	93.4	93.3	0.87	80.0	2.5	6.9	3.1	66	79	**1PC1301-2BB2■-■■■■**	305	0.46
55	**–**	**250 M**	1480	355	93.5	93.5	93.1	0.85	100	2.7	6.8	3.0	66	79	**1PC1301-2CB2■-■■■■**	385	0.75
75	**–**	**280 S**	1485	482	94.0	93.9	93.5	0.87	132	2.5	6.8	3.0	71	85	**1PC1301-2DB0■-■■■■**	550	1.3
90	**–**	**280 M**	1485	579	94.2	94.1	93.8	0.87	159	2.6	7.3	3.1	71	85	**1PC1301-2DB2■-■■■■**	570	1.4
110	**–**	**315 S**	1490	705	94.5	94.3	94.2	0.86	195	2.7	7.4	3.0	72	86	**1PC1301-3AB0■-■■■■**	740	2.0
132	**–**	**315 M**	1490	846	94.7	94.6	94.5	0.87	230	2.7	7.1	2.9	75	89	**1PC1301-3AB2■-■■■■**	870	2.3
160	**–**	**315 L**	1490	1025	94.9	94.8	94.3	0.87	280	2.8	7.2	3.1	76	91	**1PC1301-3AB4■-■■■■**	940	2.8
200	**–**	**315 L**	1490	1282	95.1	94.6	94.0	0.87	350	3.1	7.5	3.2	77	92	**1PC1301-3AB5■-■■■■**	1140	3.5

Voltages	Version			Order code
Cover plate rotatable 4 x 90°				
50 Hz 230 VΔ/400 VY	**Standard**	**2**	**2**	–
50 Hz 400 VΔ/690 VY	**Standard**	**3**	**4**	–
50 Hz 500 VY	Without additional charge	**2**	**7**	–
50 Hz 500 VΔ	Without additional charge	**4**	**0**	–
For other voltages [1] and more information, see page 6/15		**9**	**0**	. . .

Types of construction	Version		Order code
Without flange	**Standard**	**A**	–
With flange	With additional charge	**F**	–
For other types of construction and more information, see page 6/18		■	. . .

Motor protection	Version	
Cover plate rotatable 4 x 90°		
Without	**Standard**	**A**
1 or 3 PTC thermistors – for tripping (2 terminals)	With additional charge	**B**
For other motor protection and more information, see page 6/19		■

Terminal box position	Version	
Terminal box at top	**Standard**	**4**
For other terminal box positions and more information, see page 6/20		■

Special versions		Order code(s)
Forced-air cooled motors w/o ext. fan/fan cover (IC418)	**1PC1301-. . . . ■-■■■■-Z**	**F90 +. . .+. . .+. . .**
For options, see from page 6/23	**1PC1301-. . . . ■-■■■■-Z**	**. . .+. . .+. . .+. . .**

[1] Operating values at rated power for 60 Hz possible on request (for 4-pole and 6-pole).

[2] Types derived from IM B3 (IM B6/7/8, IM V6 and IM V5) and from IM B5 (IM V3 and IM V1) are possible, provided that no requirement exists for stamping of the type on the rating plate. The basic type IM B3 or IM B5 is stamped as standard on the rating plate. If mounted in a different position, the position must be specified to ensure that the condensation drainage holes are positioned correctly.

© Siemens AG 2018

Selection and ordering data (continued)

P_{rated}, 50 Hz	P_{rated}, 60 Hz	Frame size	Operating values at rated power: n_{rated}, 50 Hz	T_{rated}, 50 Hz	η_{rated}, 50 Hz, 4/4	η_{rated}, 50 Hz, 3/4	η_{rated}, 50 Hz, 2/4	cos-φ_{rated}, 50 Hz, 4/4	I_{rated}, 50 Hz, 400 V	T_{LR}/T_{rated}	I_{LR}/I_{rated}	T_B/T_{rated}	L_{pfA}, 50 Hz	L_{WA}, 50 Hz	Cast-iron series 1PC1301 Article No.	$m_{IM\ B3}$	J
kW	kW	FS	rpm	Nm	%	%	%		A				dB(A)	dB(A)		kg	kgm²
• Cooling: self-ventilated (IC411) or with order code F90 forced-air cooled without external fan and fan cover (IC418) • Efficiency according to IEC 60034-30: IE2 High Efficiency, service factor (SF) 1.15 • Insulation: Thermal class 180 (temperature class H), IP55 degree of protection, utilization in accordance with thermal class 130 (temperature class B)																	
6-pole: 1000 rpm at 50 Hz																	
15	–	**180 L**	975	147	89.7	90.1	89.5	0.78	31.0	2.5	6.0	3.1	57	70	**1PC1301-1EC4■-■■■■**	155	0.17
18.5	–	**200 L**	978	181	90.4	91.3	91.2	0.82	36.0	2.4	5.8	2.6	63	76	**1PC1301-2AC4■-■■■■**	200	0.25
22	–	**200 L**	978	215	90.9	91.7	91.4	0.82	42.5	2.5	6.2	2.6	63	76	**1PC1301-2AC5■-■■■■**	220	0.30
30	–	**225 M**	980	292	91.7	92.1	91.9	0.83	57.0	2.5	5.6	2.7	65	78	**1PC1301-2BC2■-■■■■**	300	0.58
37	–	**250 M**	980	361	92.2	92.4	92.4	0.83	70.0	2.8	6.0	2.5	62	77	**1PC1301-2CC2■-■■■■**	370	0.86
45	–	**280 S**	982	438	92.7	92.9	92.7	0.84	83.0	2.7	6.3	2.6	65	79	**1PC1301-2DC0■-■■■■**	460	1.1
55	–	**280 M**	985	533	93.1	93.4	93.5	0.86	99.0	2.5	6.4	2.6	65	79	**1PC1301-2DC2■-■■■■**	510	1.4
75	–	**315 S**	988	725	93.7	93.5	93.1	0.84	138	2.5	6.7	2.8	65	79	**1PC1301-3AC0■-■■■■**	660	2.1
90	–	**315 M**	988	870	94.0	93.8	93.1	0.84	165	2.6	6.9	2.8	65	79	**1PC1301-3AC2■-■■■■**	730	2.5
110	–	**315 L**	988	1063	94.3	94.2	94.1	0.86	196	2.7	7.0	2.8	68	82	**1PC1301-3AC4■-■■■■**	940	3.6
132	–	**315 L**	988	1276	94.6	94.5	94.3	0.86	235	3.0	7.5	2.9	69	84	**1PC1301-3AC5■-■■■■**	990	4.0
160	–	**315 L**	988	1546	94.8	94.3	94.0	0.86	285	3.1	7.7	3.3	69	84	**1PC1301-3AC6■-■■■■**	1160	4.7

Voltages	Version			Order code
Cover plate rotatable 4 x 90°				
50 Hz 230 VΔ/400 VY	**Standard**	**2**	**2**	–
50 Hz 400 VΔ/690 VY	**Standard**	**3**	**4**	–
50 Hz 500 VY	Without additional charge	**2**	**7**	–
50 Hz 500 VΔ	Without additional charge	**4**	**0**	–
For other voltages [1] and more information, see page 6/15		**9**	**0**	. . .

Types of construction		Version		Order code
Without flange	IM B3 [2]	**Standard**	**A**	–
With flange	IM B5 [2]	With additional charge	**F**	–
For other types of construction and more information, see page 6/18			■	. . .

Motor protection	Version		Order code
Cover plate rotatable 4 x 90°			
Without	**Standard**	**A**	
1 or 3 PTC thermistors – for tripping (2 terminals)	With additional charge	**B**	
For other motor protection and more information, see page 6/19		■	

Terminal box position	Version		Order code
Terminal box at top	**Standard**	**4**	
For other terminal box positions and more information, see page 6/20		■	

Special versions		Order code(s)
Forced-air cooled motors w/o ext. fan/fan cover (IC418)	**1PC1301-. . . . ■-■■■■-Z**	**F90 +. . .+. . .+. . .**
For options, see from page 6/23	**1PC1301-. . . . ■-■■■■-Z**	. . .+. . .+. . .+. . .

[1] Operating values at rated power for 60 Hz possible on request (for 4-pole and 6-pole).

[2] Types derived from IM B3 (IM B6/7/8, IM V6 and IM V5) and from IM B5 (IM V3 and IM V1) are possible, provided that no requirement exists for stamping of the type on the rating plate. The basic type IM B3 or IM B5 is stamped as standard on the rating plate. If mounted in a different position, the position must be specified to ensure that the condensation drainage holes are positioned correctly.

© Siemens AG 2018

Article No. supplements and special versions · Voltages · Aluminum series 1PC1300, 1PC1303

Selection and ordering data

Voltages	Article No. supplement			Frame size						Motor version	
	Voltage code 12th and 13th position of the Article No.		Additional identification code with order code and plain text if required	80	90	100	112	132	160		
				1PC1303						IEC	IE3
				1PC1300							IE2
1PC1303- . . . . ■ - ■ . . .											
1PC1300- . . . . ■ - ■ . . .			Order code								
Voltage at 50 Hz or 60 Hz											
50 Hz 230 VΔ/400 VY	**2**	**2**	–	□	□	□	□	□	□		
50 Hz 400 VΔ/690 VY	**3**	**4**	–	□	□	□	□	□	□		
50 Hz 500 VY	**2**	**7**	–	○	○	○	○	○	○		
50 Hz 500 VΔ	**4**	**0**	–	–	–	○	○	○	○		
Non-standard voltage and/or frequencies											
Non-standard winding [1]	**9**	**0**	**M1Y** • and customer specifications	O. R.	O. R.	O. R.	O. R.	O. R.	O. R.		

□ Standard version
○ Without additional charge
• This order code only determines the price of the version – Additional plain text is required.
O. R. Possible on request
– Not possible

Article No. supplements and special versions · Voltages · Cast-iron series 1PC1301, 1PC1304

Selection and ordering data

Voltages	Article No. supplement			Frame size						Motor version	
	Voltage code 12th and 13th position of the Article No.		Additional identification code with order code and plain text if required	180	200	225	250	280	315		
				1PC1304						IEC	IE3
				1PC1301							IE2
1PC1304- . . . . ■ - ■ . . .											
1PC1301- . . . . ■ - ■ . . .			Order code								
Voltage at 50 Hz or 60 Hz											
50 Hz 230 VΔ/400 VY	**2**	**2**	–	□	□	□	□	□	□		
50 Hz 400 VΔ/690 VY	**3**	**4**	–	□	□	□	□	□	□		
50 Hz 500 VY	**2**	**7**	–	○	○	○	○	○	○		
50 Hz 500 VΔ	**4**	**0**	–	○	○	○	○	○	○		
Non-standard voltage and/or frequencies											
Non-standard winding [1]	**9**	**0**	**M1Y** • and customer specifications	O. R.	O. R.	O. R.	O. R.	O. R.	O. R.		

□ Standard version
○ Without additional charge
• This order code only determines the price of the version – Additional plain text is required.
O. R. Possible on request

[1] Special voltages or 60 Hz on request.

© Siemens AG 2018

Selection and ordering data

Types of construction		Article No. supplement		Frame size						Motor version	
		Type of construction code letter 14th position of the Article No.	Additional identification code with order code and plain text if required	80	90	100	112	132	160		
				1PC1303						IEC	IE3
				1PC1300							IE2
	1PC1303- . . . . . - . ■ . .										
	1PC1300- . . . . . - . ■ . .		Order code								
Without flange											
IM B3		**A**	**–**	□	□	□	□	□	□		
IM B6	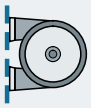	**T**	**–**	□	□	□	□	□	□		
IM B7	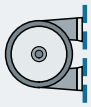	**U**	**–**	□	□	□	□	□	□		
IM B8		**V**	**–**	□	□	□	□	□	□		
IM V6		**D**	**–**	□	□	□	□	□	□		
IM V5 without protective cover		**C**	**–**	□	□	□	□	□	□		
IM B30	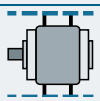	**Z**	**P3A**	O. R.	O. R.	O. R.	O. R.	O. R.	O. R.		
IM V30	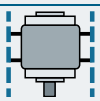	**Z**	**P3C**	O. R.	O. R.	O. R.	O. R.	O. R.	O. R.		
IM V31	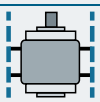	**Z**	**P3D**	O. R.	O. R.	O. R.	O. R.	O. R.	O. R.		

For legend, see page 6/17.

© Siemens AG 2018

Article No. supplements and special versions · Types of construction · Aluminum series 1PC1300, 1PC1303

Types of construction		Article No. supplement		Frame size						Motor version	
		Type of construction code letter 14th position of the Article No.	Additional identification code with order code and plain text if required	**80**	**90**	**100**	**112**	**132**	**160**		
				1PC1303						IEC	IE3
				1PC1300							IE2
1PC1303- . . . . . - .		■ . .									
1PC1300- . . . . . - .		■ . .	Order code								
With flange		**Acc. to EN 50347 Acc. to DIN 42 948**		**FF165 A 200**	**FF165 A 200**	**FF215 A 250**	**FT215 A 250**	**FF265 A 300**	**FF300 A 350**		
IM B5	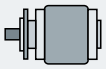	**F**	–	✓	✓	✓	✓	✓	✓		
IM V1 without protective cover		**G**	–	✓	✓	✓	✓	✓	✓		
IM V3		**H**	–	✓	✓	✓	✓	✓	✓		
IM B35	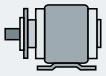	**J**	–	✓	✓	✓	✓	✓	✓		
With flange		**Acc. to EN 50347 Acc. to DIN 42 948**		**FT100 C 120**	**FT115 C 140**	**FT130 C 160**	**FT130 C 160**	**FT165 C 200**	**FT165 C 200**		
IM B14		**K**	–	✓	✓	✓	✓	✓	✓		
IM V19		**L**	–	✓	✓	✓	✓	✓	✓		
IM V18 without protective cover	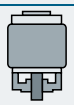	**M**	–	✓	✓	✓	✓	✓	✓		
IM B34	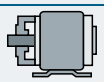	**N**	–	✓	✓	✓	✓	✓	✓		

□ Standard version
✓ With additional charge
O. R. Possible on request

© Siemens AG 2018

Selection and ordering data

Types of construction		Article No. supplement: Type of construction code letter 14th position of the Article No.	Article No. supplement: Additional identification code with order code and plain text if required	Frame size: 180	200	225	250	280	315 S/M	315 L 2-pole	315 L 4-, 6-pole	Motor version
				1PC1304								IEC IE3
				1PC1301								IE2
1PC1304-. . . . . -.		■ . .										
1PC1301-. . . . . -.		■ . .	Order code									
Without flange												
IM B3	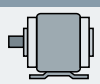	**A**	–	□	□	□	□	□	□	□	□	
IM B6	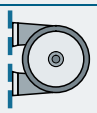	**T**	–	□	□	□	□	□	□	□	□	
IM B7	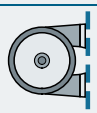	**U**	–	□	□	□	□	□	□	□	□	
IM B8		**V**	–	□	□	□	□	□	□	□	□	
IM V6	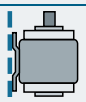	**D**	–	□	□	□	□	□	□	✓	□	
IM V5 without protective cover	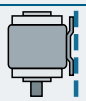	**C**	–	□	□	□	□	□	□	✓	□	
IM B30	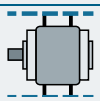	**Z**	**P3A**	O. R.	O. R.	O. R.	O. R.	O. R.	O. R.	O. R.	O. R.	
IM V30	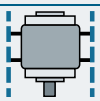	**Z**	**P3C**	O. R.	O. R.	O. R.	O. R.	O. R.	O. R.	O. R.	O. R.	
IM V31	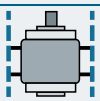	**Z**	**P3D**	O. R.	O. R.	O. R.	O. R.	O. R.	O. R.	O. R.	O. R.	
With flange		**Acc. to EN 50347 Acc. to DIN 42 948**		**FF300 A 350**	**FF350 A 400**	**FF400 A 450**	**FF500 A 550**	**FF500 A 550**	**FF600 A 660**	**FF600 A 660**	**FF600 A 660**	
IM B5	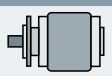	**F**	–	✓	✓	✓	✓	✓	✓	–	–	
IM V1 without protective cover	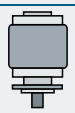	**G**	–	✓	✓	✓	✓	✓	✓	✓	✓	
IM V3		**H**	–	✓	✓	✓	✓	✓	✓	–	–	
IM B35	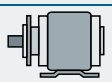	**J**	–	✓	✓	✓	✓	✓	✓	✓	✓	

□ Standard version
✓ With additional charge
– Not possible
O. R. Possible on request

© Siemens AG 2018

Article No. supplements and special versions · Motor protection · Aluminum series 1PC1300, 1PC1303

Selection and ordering data

Motor protection	Article No. supplement		Frame size						Motor version	
	Motor protection code letter 15th position of the Article No.	Additional identification code with order code and plain text if required	**80**	**90**	**100**	**112**	**132**	**160**		
			1PC1303						IEC	IE3
			1PC1300							IE2
1PC1303- . . . . . **-** . . ■ .										
1PC1300- . . . . . **-** . . ■ .		Order code								
Motor protection										
None (standard)	**A**	–	□	□	□	□	□	□		
1 or 3 PTC thermistors – for tripping (2 terminals)	**B**	–	✓	✓	✓	✓	✓	✓		
2 or 6 PTC thermistors – for alarm and tripping (4 terminals)	**C**	–	✓	✓	✓	✓	✓	✓		
1 KTY84-130 temperature sensor (2 terminals)	**F**	–	✓	✓	✓	✓	✓	✓		

□ Standard version
✓ With additional charge

Article No. supplements and special versions · Motor protection · Cast-iron series 1PC1301, 1PC1304

Selection and ordering data

Motor protection	Article No. supplement		Frame size						Motor version	
	Motor protection code letter 15th position of the Article No.	Additional identification code with order code and plain text if required	**180**	**200**	**225**	**250**	**280**	**315**		
			1PC1304						IEC	IE3
			1PC1301							IE2
1PC1304- . . . . . **-** . . ■ .										
1PC1301- . . . . . **-** . . ■ .		Order code								
Motor protection										
None (standard)	**A**	–	□	□	□	□	□	□		
1 or 3 PTC thermistors – for tripping (2 terminals)	**B**	–	✓	✓	✓	✓	✓	✓		
2 or 6 PTC thermistors – for alarm and tripping (4 terminals)	**C**	–	✓	✓	✓	✓	✓	✓		
1 KTY84-130 temperature sensor (2 terminals)	**F**	–	✓	✓	✓	✓	✓	✓		

□ Standard version
✓ With additional charge

© Siemens AG 2018

Article No. supplements and special versions · Terminal box position · Aluminum series 1PC1300, 1PC1303

Selection and ordering data

Terminal box position	Article No. supplement		Frame size						Motor version	
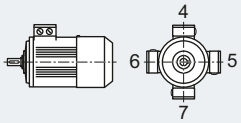	Motor protection code letter 15th position of the Article No.	Additional identification code with order code and plain text if required	**80**	**90**	**100**	**112**	**132**	**160**		
			1PC1303						IEC	IE3
			1PC1300							IE2
1PC1303-.....-... ■										
1PC1300-.....-... ■		Order code								
Terminal box position [1]										
Terminal box at top	**4**	–	□	□	□	□	□	□		
Terminal box on right-hand side	**5**	–	✓	✓	✓	✓	✓	✓		
Terminal box on left-hand side	**6**	–	✓	✓	✓	✓	✓	✓		
Terminal box bottom [2]	**7**	–	–	–	✓	✓	✓	✓		

□ Standard version
✓ With additional charge
– Not possible

Article No. supplements and special versions · Terminal box position · Cast-iron series 1PC1301, 1PC1304

Selection and ordering data

Terminal box position	Article No. supplement		Frame size						Motor version	
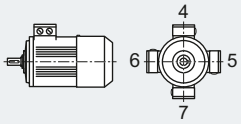	Terminal box position code 16th position of the Article No.	Additional identification code with order code and plain text if required	**180**	**200**	**225**	**250**	**280**	**315**		
			1PC1304						IEC	IE3
			1PC1301							IE2
1PC1304-.....-... ■										
1PC1301-.....-... ■		Order code								
Terminal box position [1]										
Terminal box at top	**4**	–	□	□	□	□	□	□		
Terminal box on right-hand side	**5**	–	✓	✓	✓	✓	✓	✓		
Terminal box on left-hand side	**6**	–	✓	✓	✓	✓	✓	✓		
Terminal box bottom [2]	**7**	–	O. R.	O. R.	O. R.	O. R.	O. R.	O. R.		

□ Standard version
✓ With additional charge
O. R. Possible on request

6

[1] This refers to the position of the terminal box base on the housing.
[2] For motors without feet.

© Siemens AG 2018

Selection and ordering data

Special versions	Additional identification code **-Z** with order code and plain text if required	Frame size						Motor version	
		80	**90**	**100**	**112**	**132**	**160**		
		1PC1303						IEC	IE3
		1PC1300							IE2
1PC1303-. . . . .-. . . . .-Z									
1PC1300-. . . . .-. . . . .-Z	Order code								
Motor connection and terminal box									
External grounding	**H04**	✓	✓	✓	✓	✓	✓		
Terminal box on NDE [1]	**H08**	✓	✓	✓	✓	✓	✓		
Rotation of the terminal box through 180°	**R12**	○	○	○	○	○	○		
Terminal box in position 0°; connection from right	**R13**	○	○	○	○	○	○		
One metal cable gland		◘	◘	◘	◘	◘	◘		
Windings and insulation									
Increased air humidity/temperature with 30 to 60 g water per m^3 of air	**N30**	–	–	✓	✓	✓	✓		
Colors and paint finish									
Standard paint finish C2 in RAL 7030 stone gray		◘	◘	◘	◘	◘	◘		
Unpainted (only cast-iron parts primed)	**S00**	○	○	○	○	○	○		
Unpainted, only primed	**S01**	✓	✓	✓	✓	✓	✓		
Special paint finish sea air resistant C4	**S03**	✓	✓	✓	✓	✓	✓		
Top coat polyurethane [2]	**S06**	✓	✓	✓	✓	✓	✓		
Paint finish in other standard RAL colors: RAL 1002, 1013, 1015, 1019, 2003, 2004, 3000, 3007, 5002, 5007, 5009, 5010, 5012, 5015, 5017, 5018, 5019, 6011, 6019, 6021, 7000, 7001, 7004, 7011, 7016, 7022, 7031, 7032, 7033, 7035, 9001, 9002, 9005 (see Catalog Section 1 "Introduction")	**Y53 •** and paint finish RAL….	✓	✓	✓	✓	✓	✓		
Paint finish in special RAL colors: For RAL colors, see "Special paint finish in special RAL colors" (see Catalog Section 1 "Introduction")	**Y56 •** and paint finish RAL….	✓	✓	✓	✓	✓	✓		
Mechanical version and degrees of protection									
Protective cover [3]	**H00**	✓	✓	✓	✓	✓	✓		
Screwed-on (instead of cast) feet	**H01**	✓	✓	✓	✓	✓	✓		
Condensation drainage holes		◘	◘	◘	◘	◘	◘		
Rust-resistant screws (externally)	**H07**	–	–	✓	✓	✓	✓		
IP65 degree of protection	**H20**	✓	✓	✓	✓	✓	✓		
IP56 degree of protection	**H22**	✓	✓	✓	✓	✓	✓		
Coolant temperature and installation altitude									
Coolant temperature –30 to +40 °C	**D04**	✓	✓	✓	✓	✓	✓		
Versions in accordance with standards and specifications									
CCC China Compulsory Certification	**D01**	✓	✓	–	–	–	–		
Bearings and lubrication									
Bearing design for increased cantilever forces [8]	**L22**	–	–	–	–	✓	✓		
Regreasing device	**L23**	–	–	✓	✓	✓	✓		
Measuring nipple for SPM shock pulse measurement for bearing inspection	**Q01**	–	–	✓	✓	✓	✓		
Bearing insulation DE	**L50**	O. R.	O. R.	O. R.	O. R.	O. R.	O. R.		
Bearing insulation NDE	**L51**	O. R.	O. R.	O. R.	O. R.	O. R.	O. R.		
Balance and vibration severity									
Vibration severity grade A		◘	◘	◘	◘	◘	◘		
Vibration severity grade B	**L00**	✓	✓	✓	✓	✓	✓		
Half-key balancing (standard)		◘	◘	◘	◘	◘	◘		
Balancing without feather key	**L01**	✓	✓	✓	✓	✓	✓		
Full-key balancing	**L02**	✓	✓	✓	✓	✓	✓		

For legends and footnotes, see page 6/22.

© Siemens AG 2018

Article No. supplements and special versions · Options · Aluminum series 1PC1300, 1PC1303

Special versions	Additional identification code **-Z** with order code and plain text if required		Frame size 80	90	100	112	132	160	Motor version	
			1PC1303						IEC	IE3
			1PC1300							IE2
1PC1303-. . . . . -. . . . -Z **1PC1300-. . . . . -. . . . -Z**	Order code									
Shaft and rotor										
Shaft extension with standard dimensions, without feather keyway	**L04**		–	–	✓	✓	✓	✓		
Standard, cylindrical shaft extension (second shaft extension) NDE acc. to EN 50347	**L05**		✓	✓	✓	✓	✓	✓		
Concentricity of shaft extension in accordance with DIN 42955 Tolerance R	**L07**		✓	✓	✓	✓	✓	✓		
Concentricity of shaft extension, coaxiality and linear movement in accordance with DIN 42955 Tolerance R for flange-mounted motors	**L08**		✓	✓	✓	✓	✓	✓		
Non-standard cylindrical shaft extension DE [4]	**Y58** • and customer specifications		✓	✓	✓	✓	✓	✓		
Non-standard cylindrical shaft extension, NDE [4]	**Y59** • and customer specifications		✓	✓	✓	✓	✓	✓		
Special shaft steel as requested by customer	**Y60** • and customer specifications		O. R.	O. R.	O. R.	O. R.	O. R.	O. R.		
Heating and ventilation										
Without external fan and without fan cover	**F90**		○	○	○	○	○	○		
Rating plate and additional rating plates										
Additional rating plate for voltage tolerance [5]	**B07**		✓	✓	✓	✓	✓	✓		
Second rating plate, loose	**M10**		✓	✓	✓	✓	✓	✓		
Additional rating plate with deviating rating plate data	**Y80** • and customer specifications		✓	✓	✓	✓	✓	✓		
Additional rating plate with customer specifications	**Y82** • and customer specifications		✓	✓	✓	✓	✓	✓		
Additional information on rating plate and on package label (max. 20 characters)	**Y84** • and customer specifications		✓	✓	✓	✓	✓	✓		
Packaging, safety notes, documentation and test certificates										
Acceptance test certificate 3.1 according to EN 10204 [6]	**B02**		✓	✓	✓	✓	✓	✓		
Printed German/English operating instructions enclosed [7]	**B04**		✓	✓	✓	✓	✓	✓		
Standard test (routine test) with acceptance	**B65**		✓	✓	✓	✓	✓	✓		
Type test with heat run for horizontal motors, with acceptance	**B83**		✓	✓	✓	✓	✓	✓		
"Basic" documentation package	**B90**	*New!*	✓	✓	✓	✓	✓	✓		
"Advanced" documentation package	**B91**	*New!*	✓	✓	✓	✓	✓	✓		
"Projects" documentation package	**B92**	*New!*	✓	✓	✓	✓	✓	✓		

□ Standard version
○ Without additional charge
• This order code only determines the price of the version – Additional plain text is required.
✓ With additional charge
– Not possible
O. R. Possible on request

1) Important: Dimensions "C" and "CA" deviate from the EN 50347 standard. Note dimensions according to dimensions sheet generator!

2) Order code **S06** cannot be combined with order code **S00** and **S01**. It can be combined with **Y53** and **Y56** on request.

3) Order code **H00** provides mechanical protection.

4) When motors are ordered that have a longer or shorter shaft extension than normal, the required position and length of the feather keyway must be specified in a sketch. It must be ensured that only feather keys in accordance with DIN 6885, Form A are permitted to be used. Valid for non-standard shaft extensions DE or NDE. The feather keys are supplied in every case.
For order codes **Y58**, **Y59** and **L05** the following applies:
– Dimensions D and DA ≤ ball bearing inner diameter (see dimension tables for "Dimensions")
– Dimensions E and EA ≤ 2 × length E (standard) of the shaft extension.
For an explanation of the order codes, see Catalog Section 1 "Introduction".

5) Can be ordered for 230 VΔ/400 VY or 400 VΔ/690 VY (voltage code "**22**" or "**34**").

6) The delivery time for the factory test certificate may differ from the delivery time for the motor.

7) The Operating Instructions (Compact) are available in PDF format for all official EU languages at http://support.automation.siemens.com/WW/view/en/10803948/133300.

8) A minimum cantilever force F_{min} of 0.5 · F_{max} is required for NU bearings (cylindrical roller bearings) in contrast to ball bearings. Cylindrical roller bearings are not suitable for coupling output or for brief periods of no-load operation without cantilever force.

© Siemens AG 2018

Selection and ordering data

Special versions	Additional identification code **-Z** with order code and plain text if required	Frame size						Motor version	
		180	**200**	**225**	**250**	**280**	**315**		
		1PC1304						IEC	IE3
		1PC1301							IE2
1PC1304-. . . . . -. . . . .-Z									
1PC1301-. . . . . -. . . . .-Z	Order code								
Motor connection and terminal box									
External grounding		◘	◘	◘	◘	◘	◘		
Terminal box on NDE [1]	**H08**	✓	✓	✓	✓	✓	✓		
Rotation of the terminal box through 180°	**R12**	○	○	○	○	○	○		
Terminal box in position 0°; connection from right	**R13**	○	○	○	○	○	○		
One metal cable gland		◘	◘	◘	◘	◘	◘		
Windings and insulation									
Increased air humidity/temperature with 30 to 60 g water per m^3 of air	**N30**	✓	✓	✓	✓	✓	✓		
Colors and paint finish									
Standard paint finish C2 in RAL 7030 stone gray		◘	◘	◘	◘	◘	◘		
Unpainted (only cast-iron parts primed)	**S00**	○	○	○	○	○	○		
Unpainted, only primed	**S01**	✓	✓	✓	✓	✓	✓		
Special paint finish C3	**S02**	✓	✓	✓	✓	✓	✓		
Special paint finish sea air resistant C4	**S03**	✓	✓	✓	✓	✓	✓		
Internal coating	**S05**	✓	✓	✓	✓	✓	✓		
Top coat polyurethane [2]	**S06**	✓	✓	✓	✓	✓	✓		
Paint finish in other standard RAL colors: RAL 1002, 1013, 1015, 1019, 2003, 2004, 3000, 3007, 5002, 5007, 5009, 5010, 5012, 5015, 5017, 5018, 5019, 6011, 6019, 6021, 7000, 7001, 7004, 7011, 7016, 7022, 7031, 7032, 7033, 7035, 9001, 9002, 9005 (see Catalog Section 1 "Introduction")	**Y53 •** and paint finish RAL....	✓	✓	✓	✓	✓	✓		
Paint finish in special RAL colors: For RAL colors, see "Special paint finish in special RAL colors" (see Catalog Section 1 "Introduction")	**Y56 •** and paint finish RAL....	✓	✓	✓	✓	✓	✓		
Mechanical version and degrees of protection									
Screwed-on (instead of cast) feet	**H01**	✓	✓	✓	✓	✓	✓		
Condensation drainage holes		◘	◘	◘	◘	◘	◘		
Rust-resistant screws (externally)	**H07**	✓	✓	✓	✓	✓	✓		
IP65 degree of protection	**H20**	✓	✓	✓	✓	✓	✓		
IP56 degree of protection	**H22**	✓	✓	✓	✓	✓	✓		
Coolant temperature and installation altitude									
Coolant temperature –30 to +40 °C	**D04**	✓	✓	✓	✓	✓	✓		
Bearings and lubrication									
Regreasing device with M10 ×1 grease nipple according to DIN 71412-A	**L19**	✓	✓	✓	✓	○	○		
Bearing design for increased cantilever forces [8]	**L22**	✓	✓	✓	✓	–	–		
Regreasing device	**L23**	✓	✓	✓	✓	–	–		
Measuring nipple for SPM shock pulse measurement for bearing inspection	**Q01**	✓	✓	✓	✓	✓	✓		
Bearing insulation DE	**L50**	–	–	O. R.	O. R.	O. R.	O. R.		
Bearing insulation NDE	**L51**	–	–	O. R.	O. R.	O. R.	O. R.		
Balance and vibration severity									
Vibration severity grade A		◘	◘	◘	◘	◘	◘		
Vibration severity grade B [3]	**L00**	✓	✓	✓	✓	✓	✓		
Half-key balancing (standard)		◘	◘	◘	◘	◘	◘		
Balancing without feather key	**L01**	✓	✓	✓	✓	✓	✓		
Full-key balancing	**L02**	✓	✓	✓	✓	✓	✓		
Shaft and rotor									
Shaft extension with standard dimensions, without feather keyway	**L04**	✓	✓	✓	✓	✓	✓		
Standard, cylindrical shaft extension (second shaft extension) NDE acc. to EN 50347	**L05**	✓	✓	✓	✓	✓	✓		

For legends and footnotes, see page 6/24.

© Siemens AG 2018

Article No. supplements and special versions · Options · Cast-iron series 1PC1301, 1PC1304

Special versions	Additional identification code **-Z** with order code and plain text if required		Frame size 180	200	225	250	280	315	Motor version IEC	IE3
			1PC1304							
			1PC1301							IE2
1PC1304-. . . . .-. . . . -Z **1PC1301-. . . . .-. . . . -Z**	Order code									
Shaft and rotor (continued)										
Concentricity of shaft extension in accordance with DIN 42955 Tolerance R	**L07**		✓	✓	✓	✓	✓	✓		
Concentricity of shaft extension, coaxiality and linear movement in accordance with DIN 42955 Tolerance R for flange-mounted motors	**L08**		✓	✓	✓	✓	✓	✓		
Non-standard cylindrical shaft extension, DE [4]	**Y58** • and customer specifications		✓	✓	✓	✓	✓	✓		
Non-standard cylindrical shaft extension, NDE [4]	**Y59** • and customer specifications		✓	✓	✓	✓	✓	✓		
Special shaft steel as requested by customer	**Y60** • and customer specifications		O. R.	O. R.	O. R.	O. R.	O. R.	O. R.		
Heating and ventilation										
Without external fan and without fan cover	**F90**		○	○	○	○	○	○		
Rating plate and additional rating plates										
Additional rating plate for voltage tolerance [5]	**B07**		✓	✓	✓	✓	✓	✓		
Second rating plate, loose	**M10**		✓	✓	✓	✓	✓	✓		
Additional rating plate with deviating rating plate data	**Y80** • and customer specifications		✓	✓	✓	✓	✓	✓		
Additional rating plate with customer specifications	**Y82** • and customer specifications		✓	✓	✓	✓	✓	✓		
Additional information on rating plate and on package label (max. 20 characters)	**Y84** • and customer specifications		✓	✓	✓	✓	✓	✓		
Packaging, safety notes, documentation and test certificates										
Acceptance test certificate 3.1 according to EN 10204 [6]	**B02**		✓	✓	✓	✓	✓	✓		
Printed German/English operating instructions enclosed [7]	**B04**		✓	✓	✓	✓	✓	✓		
Standard test (routine test) with acceptance	**B65**		✓	✓	✓	✓	✓	✓		
Type test with heat run for horizontal motors, with acceptance	**B83**		✓	✓	✓	✓	✓	✓		
"Basic" documentation package	**B90**	*New!*	✓	✓	✓	✓	✓	✓		
"Advanced" documentation package	**B91**	*New!*	✓	✓	✓	✓	✓	✓		
"Projects" documentation package	**B92**	*New!*	✓	✓	✓	✓	✓	✓		

□ Standard version
○ Without additional charge
• This order code only determines the price of the version – Additional plain text is required.
✓ With additional charge
– Not possible
O. R. Possible on request

1) Important: Dimensions "C" and "CA" deviate from the EN 50347 standard. Note dimensions according to dimensions sheet generator!

2) Order code **S06** can only be ordered in combination with **S03**, and cannot be combined with order code **S00**, **S01** and **S02**. It can be combined with **Y53** and **Y56** on request.

3) On request for 2-pole motors (concerns frame sizes 225 to 315).

4) When motors are ordered that have a longer or shorter shaft extension than normal, the required position and length of the feather keyway must be specified in a sketch. It must be ensured that only feather keys in accordance with DIN 6885, Form A are permitted to be used. The feather keyway is positioned centrally on the shaft extension. The length is defined by the manufacturer in accordance with the appropriate standard. Valid for non-standard shaft extensions DE or NDE. The feather keys are supplied in every case. For order codes **Y58**, **Y59** and **L05** the following applies:
– Dimensions D and DA ≤ ball bearing inner diameter (see dimension tables for "Dimensions")
– Dimensions E and EA ≤ 2 × length E (standard) of the shaft extension.
For an explanation of the order codes, see Catalog Section 1 "Introduction".

5) Can be ordered for 230 VΔ/400 VY or 400 VΔ/690 VY (voltage code "**22**" or "**34**").

6) The delivery time for the factory test certificate may differ from the delivery time for the motor.

7) The compact operating instructions are available in PDF format for all official EU languages at http://support.automation.siemens.com/WW/view/en/10803948/133300.

8) A minimum cantilever force F_{min} of 0.5 · F_{max} is required for NU bearings (cylindrical roller bearings) in contrast to ball bearings. Cylindrical roller bearings are not suitable for coupling output or for brief periods of no-load operation without cantilever force.

9) Not possible for 2-pole motors, frame size 315.

© Siemens AG 2018

Overview

Couplings

The motor from Siemens is connected to the machine or gear unit through a coupling. Siemens is an important coupling manufacturer with a wide range of products.

For standard applications, Siemens recommends that flexible couplings, types N-EUPEX and RUPEX or torsionally rigid couplings, types ARPEX and ZAPEX are used. For special applications, FLUDEX and ELPEX-S couplings are recommended.

Available from:

Siemens contact partner - ordering from catalog
Siemens MD 10.1 "FLENDER Standard Couplings"

or

Siemens AG
Kupplungswerk Mussum
Industriepark Bocholt
Schlavenhorst 100
46395 Bocholt, Germany
Phone +49 2871 922185
Fax +49 2871 922579

www.siemens.com
Email: flendercouplings@siemens.com

Taper pins according to DIN 258 with threaded ends and constant taper lengths

Taper pins are used for components that are repeatedly removed. The drilled hole is conically ground using a conical reamer until the pin can be pushed in by hand until the cone shoulder lies approx. 3 to 4 mm above the rim of the hole.

It can then be driven in using a hammer until it is correctly seated. The pin is removed from the drilled hole by screwing on the nut and tightening it.

Standardized taper pins are commercially available.

For instance, available from:

Otto Roth GmbH & Co. KG
Rutesheimer Strasse 22
70499 Stuttgart, Germany
Tel. +49 711 1388-0
Fax. +49 711 1388-233

www.ottoroth.de
Email: info@ottoroth.de

Foundation block according to DIN 799

The foundation blocks are inserted into the stone foundation and embedded in concrete. They are used for fixing machines of medium size, slide rails, pedestal bearings, base frames, etc. After the fixing bolts have been unscrewed, the machines can be shifted without them having to be lifted.

When the machine is initially installed, the foundation block that is bolted to the machine (without washers) and fitted with taper pins is not embedded with concrete until the machine has been fully aligned. In this case, the machine is positioned 2 to 3 mm lower. The difference in shaft height is compensated by inserting shims on final installation. The taper pins safeguard the exact position of the machine when it is repeatedly removed and replaced without the need for realignment.

Available from:

Lütgert & Co. GmbH
Postfach 42 51
33276 Gütersloh, Germany
Phone +49 5241 7407-0
Fax +49 5241 7407-90

www.luetgert-antriebe.de
Email: info@luetgert-antriebe.de

Slide rails with fixing bolts and tensioning screws according to DIN 42923

Slide rails are used to tension the belt of a machine easily and conveniently when there is no belt-tensioning pulley. They are fixed to the base using stone bolts or foundation blocks.

The assignment of slide rails to motor size can be found in DIN 42923. For motors of frame sizes 355 to 450, there are no standardized slide rails (please inquire).

Available from:

Lütgert & Co. GmbH
Postfach 42 51
33276 Gütersloh, Germany
Phone +49 5241 7407-0
Fax +49 5241 7407-90

www.luetgert-antriebe.de
Email: info@luetgert-antriebe.de

More information

Replacement motors and repair parts

- Commitment to provide replacement motors and repair parts following delivery of the motor:
  - For up to 3 years after the delivery of the original motor, in the event of total motor failure – with regard to the mounting dimensions and functions – Siemens will supply a comparable replacement motor (the type series may vary).
  - If a spare motor is supplied within the 3-year period, this does not mean that the warranty restarts.
  - Replacement motors delivered after the active production of the machine series are also identified as spare motors on the rating plate.
  - Spare parts are offered only for these spare motors on request; repair and replacement are not possible.
  - After a period of 3 years (after the delivery of the original motor), it is only possible to repair these motors (depending on the availability of the spare parts required).
  - For up to 5 years after the delivery of the original motor, spare parts will be available and for a further 5 years, Siemens will provide information about spare parts and will supply documents when required.
- When repair parts are ordered, the following details must be provided:
  - Designation and part number
  - Article No. and factory number of the motor
- For bearing types, see the section "Introduction".
- For standard components, a commitment to supply repaired parts does not apply.
- Support hotline
  In Germany
  Phone +49 911 895 7 222

You will find telephone numbers for other countries on our Internet site:
http://www.siemens.com/automation/service&support

© Siemens AG 2018

Overview

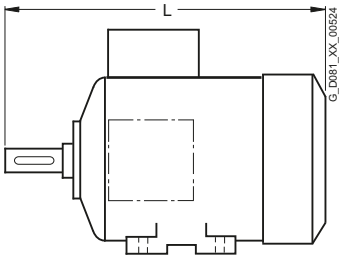

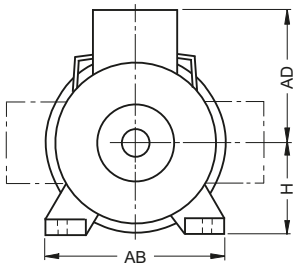

Frame size	Type	Dimensions L	AD	H	AB
80 M	Aluminum series 1PC1300, 1PC1303				
	self-ventilated	292	98.5	80	150
	forced-air cooled	253			
90 S/ 90 L	Aluminum series 1PC1300, 1PC1303				
	self-ventilated	347	103.5	90	165
	forced-air cooled	295			
100 L	Aluminum series 1PC1300, 1PC1303				
	self-ventilated	395.5	118	100	196
	forced-air cooled	221.5			
112 M	Aluminum series 1PC1300, 1PC1303				
	self-ventilated	389	129	112	226
	forced-air cooled	311			
132 S/ 132 M	Aluminum series				
	self-ventilated 1PC1300, 1PC1303-1CA0	465	149	132	256
	self-ventilated 1PC1303-1CA1, -1CB0	515			
	forced-air cooled 1PC1300, 1PC1303-1CA0	380.5			
	forced-air cooled 1PC1303-1CA1, -1CB0	430.5			
160 M	Aluminum series 1PC1300, 1PC1303				
	self-ventilated	604	172	160	300
	forced-air cooled	510	175.5		
160 L	Aluminum series				
	self-ventilated 1PC1300	604	172	160	300
	self-ventilated 1PC1303-1DA4, -1DB4	664			
	forced-air cooled 1PC1300	510	175.5		
	self-ventilated 1PC1303-1DA4, -1DB4	570			
180 M/ 180 L	Cast-iron series, self-ventilated				
	1PC1301/1PC1304-1EA2, -1EB2, -1EC4	668	242.5	180	339
	1PC1301/1PC1304-1EB4	698			
	Cast-iron series, forced-air cooled				
	1PC1301/1PC1304-1EA2, -1EB2, -1EC4	562	244	180	339
	1PC1301/1PC1304-1EB4	592			
200 L	Cast-iron series, self-ventilated				
	1PC1301-2AA4, -2AA5, -2AB5, -2AC4, 2AC5/1PC1304-2AA4	721	306	200	378
	1PC1304-2AA5, -2AB5	746			
	Cast-iron series, forced-air cooled				
	1PC1301-2AA4, -2AA5, -2AB5, -2AC4, -2AC5, 1PC1304-2AA4	617	307	200	378
	1PC1304-2AA5, -2AB5	642			
225 S/ 225 M	Cast-iron series, self-ventilated				
	1PC1301/1PC1304-2BB0	788	329	225	436
	1PC1301/1PC1304-2BA2	818			
	1PC1301-2BB2, -2BC2/1PC1304-2BB2	848			
	Cast-iron series, forced-air cooled				
	1PC1301/1PC1304-2BB0	610	329	225	436
	1PC1301/1PC1304-2BA2	700			
	1PC1301/1PC1304-2CA2, -2CB2, -2CC2	730			

Frame size	Type	Dimensions L	AD	H	AB
250 M	Cast-iron series, self-ventilated				
	1PC1301/1PC1304-2CA2, -2CB2, -2CC2	887	398	250	490
	Cast-iron series, forced-air cooled				
	1PC1301/1PC1304-2CA2, -2CB2, -2CC2	764	375	250	490
280 S/ 280 M	Cast-iron series, self-ventilated				
	1PC1301/1PC1304-2DA0, -2DB0, -2DC0	960	421	280	540
	1PC1304-2DA2, -2DB2	1070			
	Cast-iron series, forced-air cooled				
	1PC1301/1PC1304-2DA0, -2DB0, -2DC0	830	398	280	540
	1PC1304-2DA2, -2DB2	940			
315 S	Cast-iron series, self-ventilated				
	1PC1301/1PC1304-3AA0	1052	455	315	610
	1PC1301-3AB0, -3AC0, 1PC1304-3AB0	1082			
	Cast-iron series, forced-air cooled				
	1PC1301/1PC1304-3AA0	905	455	315	610
	1PC1301-3AB0, -3AC0, 1PC1304-3AB0	935			
315 M	Cast-iron series, self-ventilated				
	1PC1301/1PC1304-3AA2	1217	455	315	610
	1PC1301/1PC1304-3AB2	1247			
	1PC1301-3AC2	1082			
	Cast-iron series, forced-air cooled				
	1PC1301/1PC1304-3AA2	1070	455	315	610
	1PC1301/1PC1304-3AB2	1100			
	1PC1301-3AC2	935			
315 L	Cast-iron series, self-ventilated				
	1PC1301/1PC1304-3AA4	1217	455	315	610
	1PC1301/1PC1304-3AB4, 1PC1301-3AC4, -3AC5	1247			
	1PC1301/1PC1304-3AA5	1372			
	1PC1301/1PC1304-3AB5, 1PC1301-3AC6	1402			
	Cast-iron series, forced-air cooled				
	1PC1301/1PC1304-3AA4	1070	455	315	610
	1PC1301/1PC1304-3AB4, 1PC1301-3AC4, -3AC5	1100			
	1PC1301/1PC1304-3AA5	1225			
	1PC1301/1PC1304-3AB5, 1PC1301-3AC6	1255			

© Siemens AG 2018

Overview (continued)

Notes on the dimensions

- Dimensional drawings according to EN 50347 and IEC 60072.
- Fits
  The shaft extensions specified in the dimension tables (DIN 748) and centering spigot diameters (EN 50347) are machined with the following fits:

Dimension designation	ISO fit DIN ISO 286-2	
D, DA	to 30 over 30 to 50 over 50	j6 k6 m6
N	to 250 over 250	j6 h6
F, FA		h9
K		H17
S	flange (FF)	H17

  The drilled holes of couplings and belt pulleys should have an ISO fit of at least H7.

- Dimension tolerances
  For the following dimension designations, the admissible deviations are given below:

Dimension designation	Dimension	Admissible deviation
H	to 250 over 250	– 0.5 – 1.0
E, EA		– 0.5

  Keyways and feather keyways (dimensions GA, GC, F and FA) are made in compliance with DIN 6885 Part 1.
- All dimensions are specified in mm.

Dimension sheet generator

(part of the DT Configurator)

A dimensional drawing can be created in the DT Configurator for every configurable motor. A dimensional drawing can be requested for every other motor.

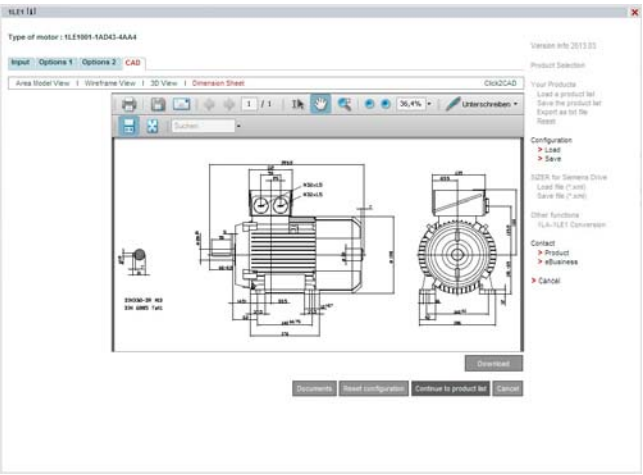

When a complete Article No. is entered with or without order codes, a dimensional drawing can be called up under the "Documentation" tab.
These dimensional drawings can be presented in different views and sections and printed.
The corresponding dimension sheets can be exported, saved and processed further in DXF format (interchange/import format for CAD systems) or as bitmap graphics.

Online access in the Siemens Industry Mall

The DT Configurator is integrated in the Siemens Industry Mall and can be used on the Internet without installation.
German: www.siemens.de/dt-konfigurator
English: www.siemens.com/dt-configurator

Offline access in the Interactive Catalog CA 01

The DT Configurator is also integrated on the DVD of the Interactive Catalog CA 01 – the offline version of Siemens Industry Mall. CA 01 can be ordered from the relevant Siemens sales office or via the Internet: www.siemens.com/automation/CA01

© Siemens AG 2018

Dimensional drawings

Type of construction IM B3

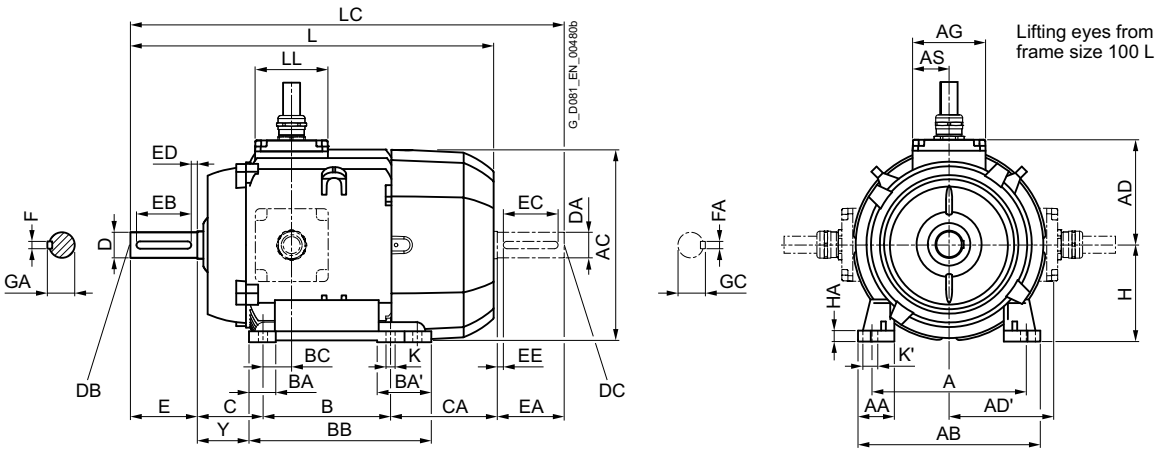

Type of construction IM B5

For flange dimensions, see page 1/53 (**Z** = the number of retaining holes)

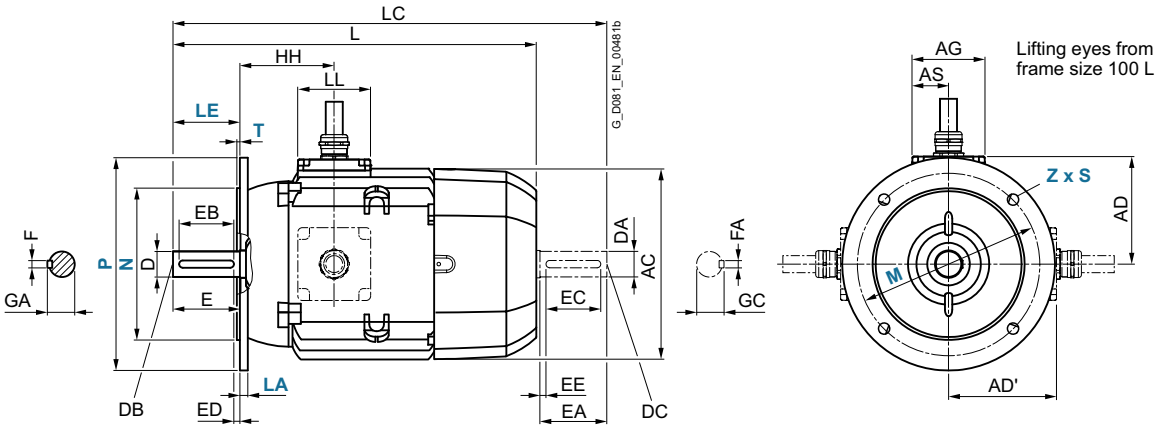

For motor	Type			Dimension designation acc. to **IEC**																
Frame size			No. of poles	A	AA	AB	AC	AD	AD'	AG	AS	B	BA	BA'	BB	BC	C	CA	H	HA	Y
80 M	1PC1300 1PC1303	All	2, 4, 6	125	30.5	150	159	98.5	98.5	37.5	75	100	32	32	118	23	50	113	80	8	41
90 S 90 L	1PC1300 1PC1303	All	2, 4, 6 2, 4, 6	140	30.5	165	178	103.5	103.5	37.5	75	100 125	33	54	143	22.5	56	159 134	90	10	47
100 L	1PC1300 1PC1303	All	2, 4, 6	160	42	196	198	115	115	47.5	95	140	37.5	37.5	176	33.5	63	141	100	12	45
112 M	1PC1300 1PC1303	All	2, 4, 6	190	46	226	222	126	126	47.5	95	140	37.5	37.5	176	26	70	130	112	12	52
132 S	1PC1300 1PC1303	All 1CA0 1CA1, 1CB0	2, 4, 6 2, 4	216	53	256	262	146	146	55	110	140	38	76 76 [1]	218 218 [2]	26.5	89	167 128.5 [3] 178.5	132	15	69
132 M	1PC1300 1PC1303	All 1CB2	2, 4, 6 2, 4	216	53	256	262	146	146	55	110	178	38	76	218	26.5	89	129 178.5	132	15	69
160 M	1PC1300 1PC1303	All 1DA2, 1DA3, 1DB2	2, 4, 6 2, 4	254	60	300	314	172	172	60	120	210	44	89 89 [4]	300 300 [5]	47	108	192 148 [6]	160	18	85
160 L	1PC1300 1PC1303	All 1DA4, 1DB4	2, 4, 6 2, 4	254	60	300	314	172	172	60	120	254	44	89 –	300	47	108	148 208	160	18	85

[1] With screwed-on feet, dimension BA' is 38 mm.
[2] With screwed-on feet, dimension BB is 180 mm.
[3] With screwed-on feet, dimension CA is 166.5 mm.
[4] With screwed-on feet, dimension BA' is 44 mm.
[5] With screwed-on feet, dimension BB is 256 mm.
[6] With screwed-on feet, dimension CA is 192 mm.

© Siemens AG 2018

Dimensional drawings (continued)

Type of construction IM B35

For flange dimensions, see page 1/53 (**Z** = the number of retaining holes)

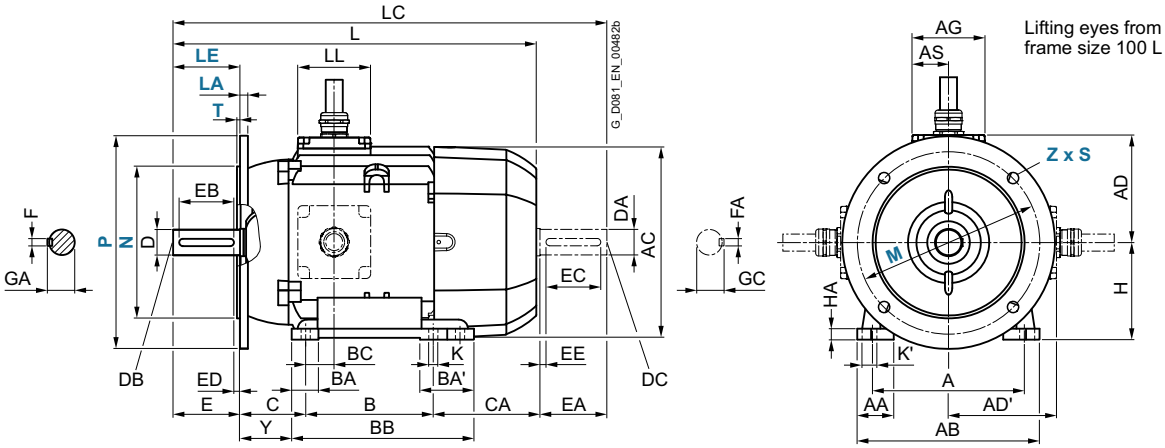

Type of construction IM B14

For flange dimensions, see page 1/53 (**Z** = the number of retaining holes)

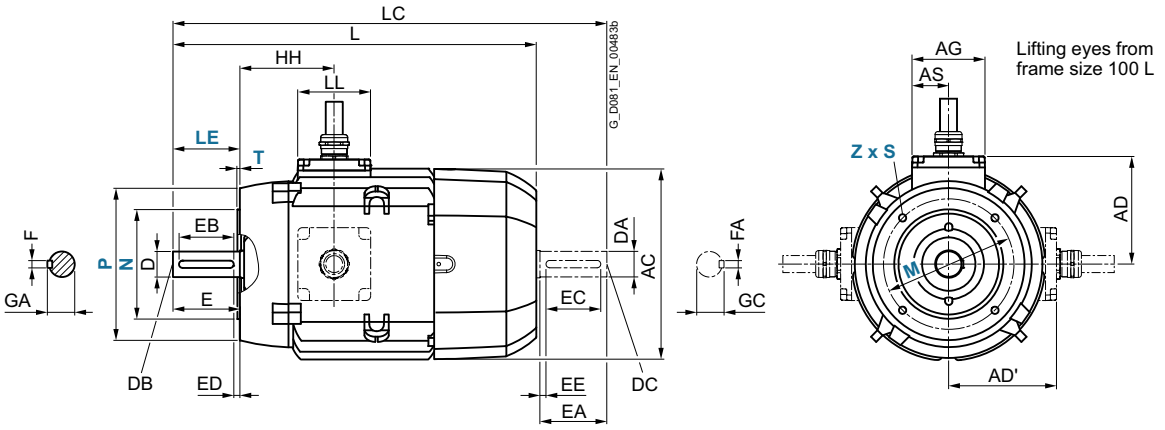

For motor	Type			Dimension designation acc. to **IEC**						DE shaft extension							NDE shaft extension						
Frame size			No. of poles	HH	K	K'	L	LC	LL	D	DB	E	EB	ED	F	GA	DA	DC	EA	EC	EE	FA	GC
80 M	1PC1300 1PC1303	All	2, 4, 6	73	9.5	13.5	292	343	75	19	M6	40	32	4	6	21.5	19	M6	40	32	4	6	21.5
90 S 90 L	1PC1300 1PC1303	All	2, 4, 6 2, 4, 6	78.5	10	14	347	405	75	24	M8	50	40	5	8	27	19	M6	40	32	4	6	21.5
100 L	1PC1300 1PC1303	All	2, 4, 6	96.5	12	16	395.5	454	95	28	M10	60	50	5	8	31	24	M8	50	40	5	8	27
112 M	1PC1300 1PC1303	All	2, 4, 6	96	12	16	389	450	95	28	M10	60	50	5	8	31	24	M8	50	40	5	8	27
132 S	1PC1300 1PC1303	All 1CA0 1CA1, 1CB0	2, 4, 6 2, 4	115.5	12	16	465 515	535.5 585.5	110	38	M12	80	70	5	10	41	28	M10	60	50	5	8	31
132 M	1PC1300 1PC1303	All 1CB2	2, 4, 6 2, 4	115.5	12	16	465 515	535.5 585.5	110	38	M12	80	70	5	10	41	28	M10	60	50	5	8	31
160 M	1PC1300 1PC1303	All 1DA2, 1DA3, 1DB2	2, 4, 6 2, 4	155	15	19	604	730	120	42	M16	110	90	10	12	45	42	M16	110	90	10	12	45
160 L	1PC1300 1PC1303	All 1DA4, 1DB4	2, 4, 6 2, 4	155	15	19	604 664	730 739	120	42	M16	110	90	10	12	45	42	M16	110	90	10	12	45

© Siemens AG 2018

Dimensional drawings

Type of construction IM B3

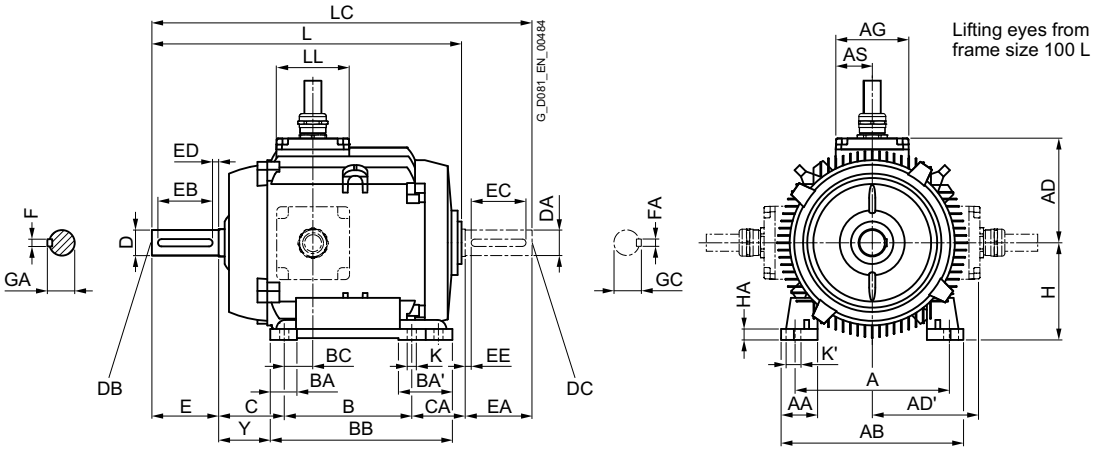

Type of construction IM B5

For flange dimensions, see page 1/53 (**Z** = the number of retaining holes)

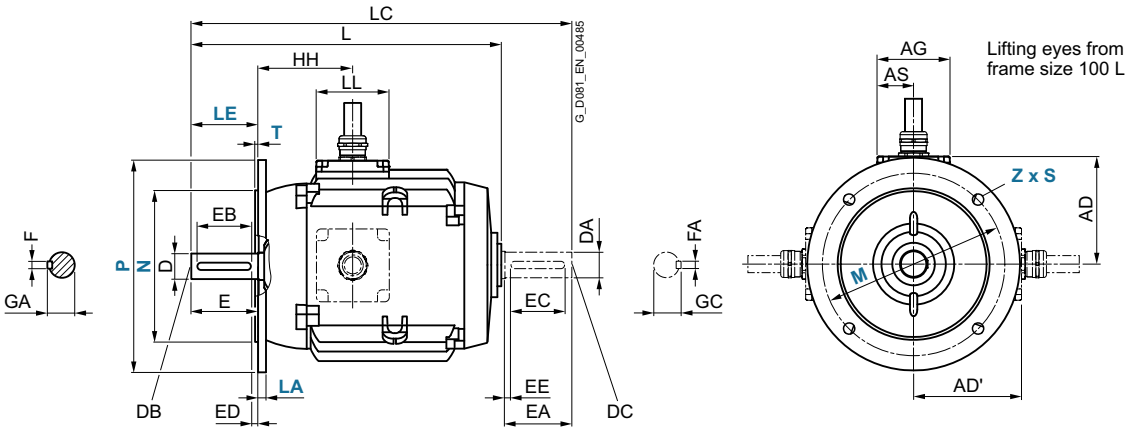

For motor	Type			Dimension designation acc. to **IEC**															
Frame size			No. of poles	A	AA	AB	AD	AD'	AG	AS	B	BA	BA'	BB	BC	C	CA	H	HA	Y
80 M	1PC1300 1PC1303	All	2, 4, 6	125	30.5	150	98.5	98.5	75	37.5	100	32	32	118	23	50	70	80	8	41
90 S 90 L	1PC1300 1PC1303	All	2, 4, 6 2, 4, 6	140	30.5	165	103.5	103.5	75	37.5	100 125	33	54	143	22.5	56	103 78	90	10	47
100 L	1PC1300 1PC1303	All	2, 4, 6	160	42	196	118	118	95	47.5	140	37.5	37.5	176	33.5	63	63	100	12	45
112 M	1PC1300 1PC1303	All	2, 4, 6	190	46	226	129	129	95	47.5	140	37.5	37.5	176	26	70	45	112	12	52
132 S	1PC1300 1PC1303	All 1CA0 1CA1, 1CB0	2, 4, 6 2, 4	216	53	256	149	149	110	55	140	38	76 76 [1] –	218 218 [2]	26.5	89	77 –	132	15	69
132 M	1PC1300 1PC1303	All 1CB2	2, 4, 6 2, 4	216	53	256	149	149	110	55	140 178	3	76 –	218	26.5	89	39 –	132	15	69
160 M	1PC1300 1PC1303	All 1DA2, 1DA3, 1DB2	2, 4, 6 2, 4	254	60	300	175.5	175.5	120	60	210	44	89 89 [3]	300 300 [4]	47	108	92	160	18	85
160 L	1PC1300 1PC1303	All 1DA4, 1DB4	2, 4, 6 2, 4	254	60	300	175.5	175.5	120	60	254	44	89	300	47	108	48	160	18	85

[1] With screwed-on feet, dimension BA' is 38 mm.
[2] With screwed-on feet, dimension BB is 180 mm.
[3] With screwed-on feet, dimension BA' is 44 mm.
[4] With screwed-on feet, dimension BB is 256 mm.

© Siemens AG 2018

Dimensional drawings (continued)

Type of construction IM B35

For flange dimensions, see page 1/53 (**Z** = the number of retaining holes)

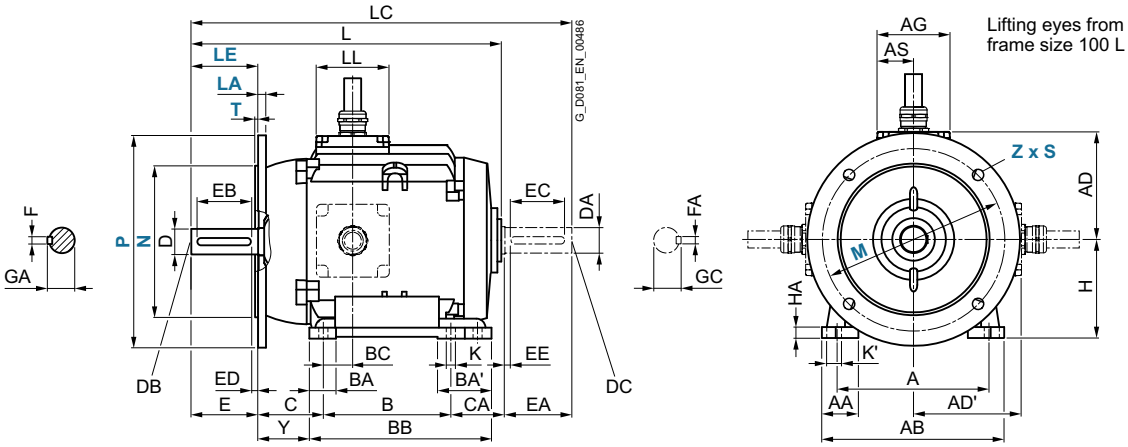

Type of construction IM B14

For flange dimensions, see page 1/53 (**Z** = the number of retaining holes)

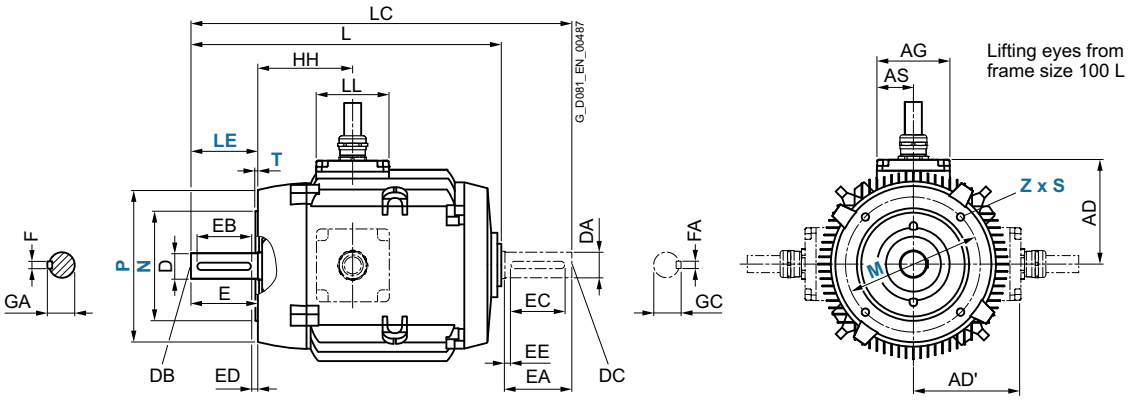

For motor	Type			Dimension designation acc. to **IEC**						DE shaft extension							NDE shaft extension						
Frame size			No. of poles	HH	K	K'	L	LC	LL	D	DB	E	EB	ED	F	GA	DA	DC	EA	EC	EE	FA	GC
80 M	1PC1300 1PC1303	All	2, 4, 6	73	9.5	13.5	253	300	75	19	M6	40	32	4	6	21.5	19	M6	40	32	4	6	21.5
90 S 90 L	1PC1300 1PC1303	All	2, 4, 6 2, 4, 6	78.5	10	14	295	349	75	24	M8	50	40	5	8	27	19	M6	40	32	4	6	21.5
100 L	1PC1300 1PC1303	All	2, 4, 6	96.5	12	16	321.5	376	95	28	M10	60	50	5	8	31	24	M8	50	40	5	8	27
112 M	1PC1300 1PC1303	All	2, 4, 6	96	12	16	311	365	95	28	M10	60	50	5	8	31	24	M8	50	40	5	8	27
132 S	1PC1300 1PC1303	All 1CA0 1CA1, 1CB0	2, 4, 6 2, 4	115.5	12	16	380.5 430.5	446 496	110	38	M12	80	70	5	10	41	28	M10	60	50	5	8	31
132 M	1PC1300 1PC1303	All 1CB2	2, 4, 6 2, 4	115.5	12	16	380.5 430.5	446 496	110	38	M12	80	70	5	10	41	28	M10	60	50	5	8	31
160 M	1PC1300 1PC1303	All 1DA2, 1DA3, 1DB2	2, 4, 6 2, 4	155	15	19	510	630	120	42	M16	110	90	10	12	45	42	M16	110	90	10	12	45
160 L	1PC1300 1PC1303	All 1DA4, 1DB4	2, 4, 6 2, 4	155	15	1	510 570	630 690	120	42	M16	110	90	10	12	45	42	M16	110	90	10	12	45

© Siemens AG 2018

Dimensional drawings

Type of construction IM B3

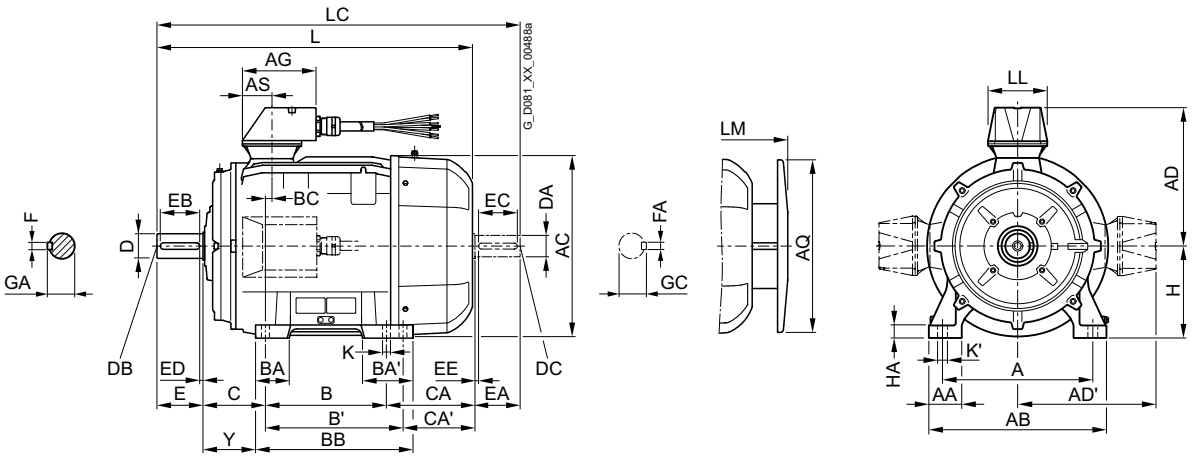

Type of construction IM B5

For flange dimensions, see page 1/53 (**Z** = the number of retaining holes)

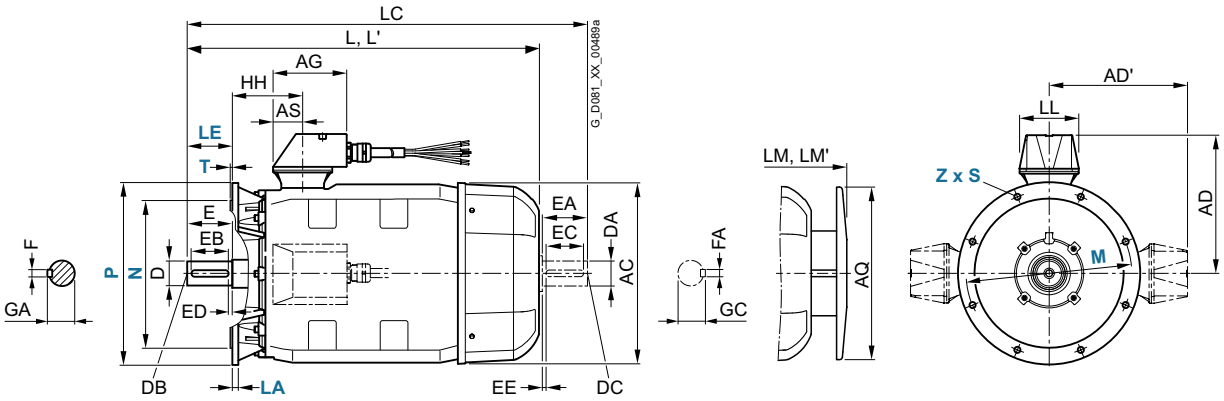

For motor	Type			Dimension designation acc. to **IEC**																					
Frame size			No. of poles	A	AA	AB	AC	AD	AD'	AG	AS	AH	AQ	AS	B	B'	BA	BA'	BB	BC	C	CA	CA'	H	HA	Y
180 M	1PC1301/ 1PC1304	1EA2, 1EB2	2, 4	279	65	339	356	242.5	242.5	100	50	468	340	50	241	279	85	120	328	34	121	202	164	180	20	95
180 L	1PC1301/ 1PC1304	1EB4	4	279	65	339	356	242.5	242.5	100	50	468	340	50	241	279	85	120	328	34	121	232	194	180	20	95
	1PC1301	1EC4	6																			202	164			
200 L	1PC1301	2AA4, 2AA5, 2AB5, 2AC4, 2AC5	2 4, 6 6	318	70	378	396	306	306	175	65	533	340	65	305	–	104	104	355	31	133	177	–	200	25	108
	1PC1304	2AA4 2AA5, 2AB5	2 2, 4																							
225 S	1PC1301/ 1PC1304	2BB0	4	356	80	436	449	328	328	175	65	556	425	65	286	311	92	117	361	15	149	218	193	225	34	124
225 M	1PC1301	2BA2 2BB2, 2BC2	2 4, 6	356	80	436	449	328	328	175	65	556	425	65	286	311	92	117	361	15	149	278	253	225	34	124
	1PC1304	2BA2 2BB2	2 4																							
250 M	1PC1301	2CA2 2CB2, 2CC2	2 4, 6	406	100	490	497	398	398	224	90	620	470	90	349	–	102	102	409	24	168	235	–	250	40	138
	1PC1304	2CA2 2CB2	2 4																							

© Siemens AG 2018

Dimensional drawings (continued)

Type of construction IM B35

For flange dimensions, see page 1/53 (**Z** = the number of retaining holes)

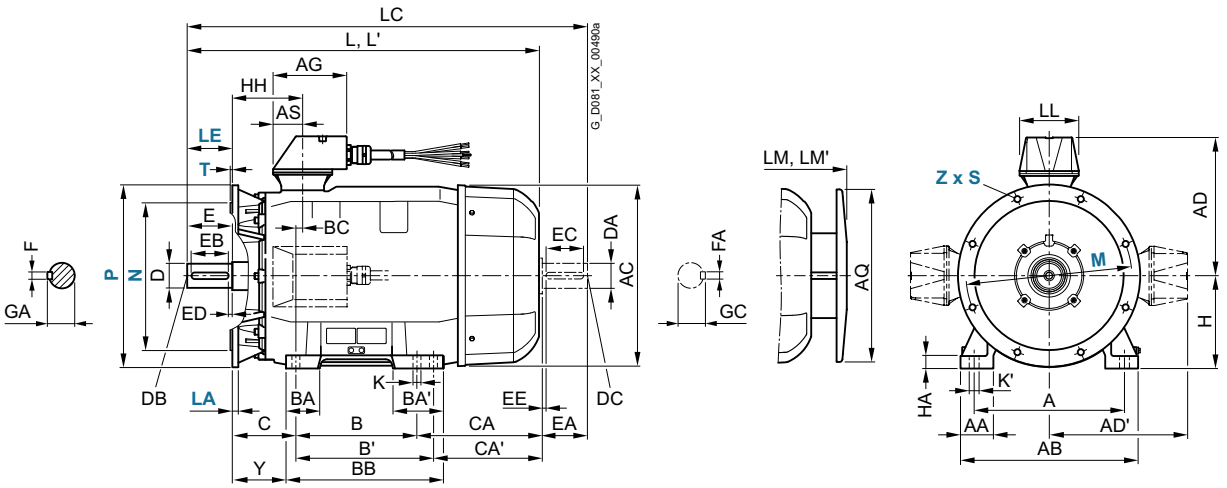

For motor	Type			Dimension designation acc. to **IEC**							DE shaft extension							NDE shaft extension						
Frame size			No. of poles	HH	K	K'	L	LC [1]	LL	LM	D	DB	E	EB	ED	F	GA	DA	DC	EA	EC	EE	FA	GC
180 M	1PC1301/ 1PC1304	1EA2, 1EB2	2, 4	155	15	19	668	784	100	758	48	M16	110	100	5	14	51.5	48	M16	110	100	5	14	51.5
180 L	1PC1301/ 1PC1304	1EB4	4	155	15	19	698	814	100	788	48	M16	110	100	5	14	51.5	48	M16	110	100	5	14	51.5
	1PC1301	1EC4	6				668	784		758														
200 L	1PC1301	2AA4, 2AA5, 2AB5, 2AC4, 2AC5	2 4, 6 6	164	19	25	721	835	130	811	55	M20	110	100	5	16	59	55	M20	110	100	5	16	59
	1PC1304	2AA4	2																					
		2AA5, 2AB5	2, 4				746	860		836														
225 S	1PC1301/ 1PC1304	2BB0	4	164	19	25	788	903	130	888	60	M20	140	125	10	18	64	55	M20	110	100	5	16	59
225 M	1PC1301	2BA2	2	164	19	25	818	933	130	918	55	M20	110	100	5	18	59	48	M16	110	100	5	14	51.5
		2BB2, 2BC2	4, 6				848	963		948	60		140	125	10		64	55	M20				16	59
	1PC1304	2BA2	2				818	933		918	55		110	100	5	16	59	48	M16				14	51.5
		2BB2	4				848	963		948	60		140	125	10	18	64	55	M20				16	59
250 M	1PC1301	2CA2	2	192	24	30	887	1002	180	987	60	M20	140	125	10	18	64	55	M20	110	100	5	16	59
		2CB2, 2CC2	4, 6					1032			65						69	60		140	125	10	18	64
	1PC1304	2CA2	2					1002			60						64	55		110	100	5	16	59
		2CB2	4					1032			65						69	60		140	125	10	18	64

[1] In the low-noise version, a second shaft extension and/or mounted encoder is not possible.

© Siemens AG 2018

Dimensional drawings (continued)

Type of construction IM B3

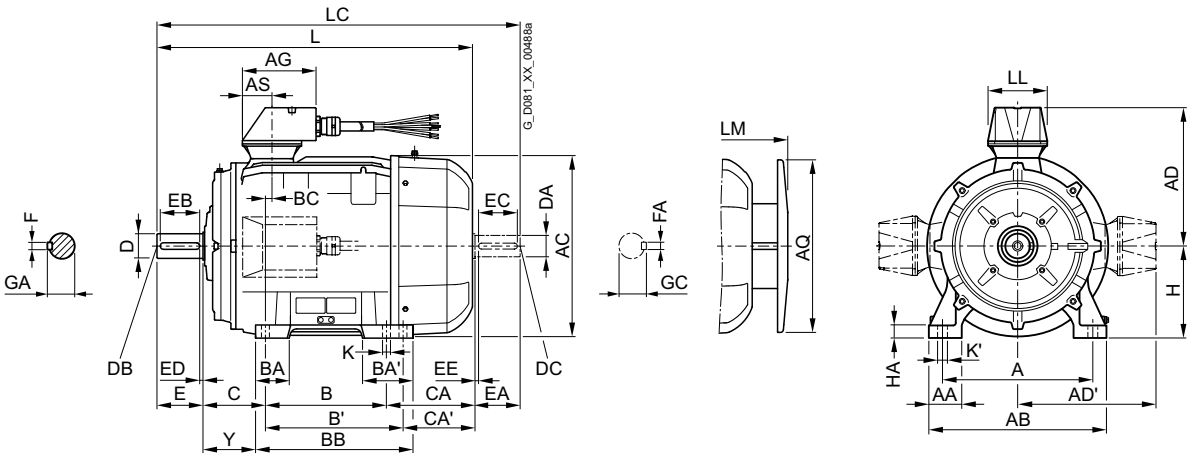

Type of construction IM B5

For flange dimensions, see page 1/53 (**Z** = the number of retaining holes)

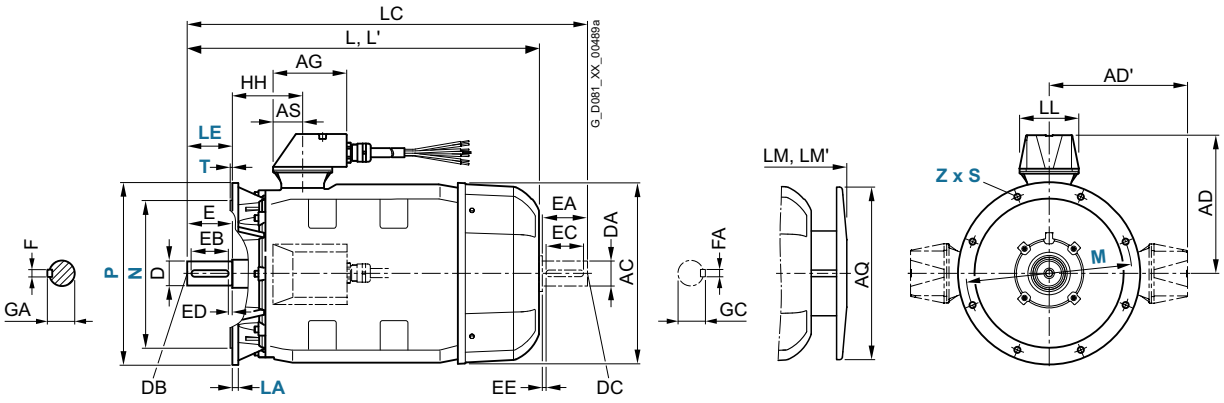

For motor Frame size	Type		No. of poles	Dimension designation acc. to **IEC** A	AA	AB	AC	AD	AD'	AG	AH	AQ'	AS	B	B'	BA	BA'	BB	BC	C	CA	CA'	H	HA	Y
280 S	1PC1301	2DA0	2	457	100	540	551	421	421	224	672	525	90	368	419	101	152	479	20	190	267	216	280	40	160
		2DB0, 2DC0	4, 6																						
	1PC1304	2DA0	2																						
		2DB0	4																						
280 M	1PC1301	2DA2	2	457	100	540	551	421	421	224	672	525	90	368	419	101	152	479	20	190	267	216	280	40	160
		2DB2	4																						
		2DC2	6																						
	1PC1304	2DA2	2																		377	326			
		2DB2	4																						
315 S	1PC1301	3AA0	2	508	120	610	616	455	455	242	780	590	121	406	457	113	170	527	22	216	295	244	315	50	181
		3AB0, 3AC0	4, 6																						
	1PC1304	3AA0	2																						
		3AB0	4																						
315 M [1]	1PC1301	3AA2	2	508	120	610	616	455	455	242	780	590	121	457	508	113	170	578	22	216	409	358	315	50	181
		3AB2	4																						
		3AC2	6											406	457			527			295	244			
	1PC1304	3AA2	2											457	508			578			409	358			
		3AB2	4																						
315 L [1]	1PC1301	3AA4	2	508	120	610	616	455	455	242	780	590	121	457	508	113	170	578	22	216	409	358	315	50	181
		3AB4, 3AC4	4, 6																						
		3AA5	2													176	227	648			564	513			146
		3AB5	4																						
		3AC5	6													113	170	578			409	358			181
		3AC6	6													176	227	648			564	513			146
	1PC1304	3AA4	2													113	170	578			409	–			181
		3AB4	4																						
		3AA5	2													176	227	648			564	–			146
		3AB5	4																						

[1] When ordering with screwed-on feet (as standard for right-hand side and left-hand side terminal box positions; optional for top terminal box position – order code **H01**) these screwed-on feet have 3 drill holes on the NDE with the respective dimension B 406, 457 and 508 mm; the dimension BB is 666 mm.

© Siemens AG 2018

Dimensional drawings (continued)

Type of construction IM B35

For flange dimensions, see page 1/53 (**Z** = the number of retaining holes)

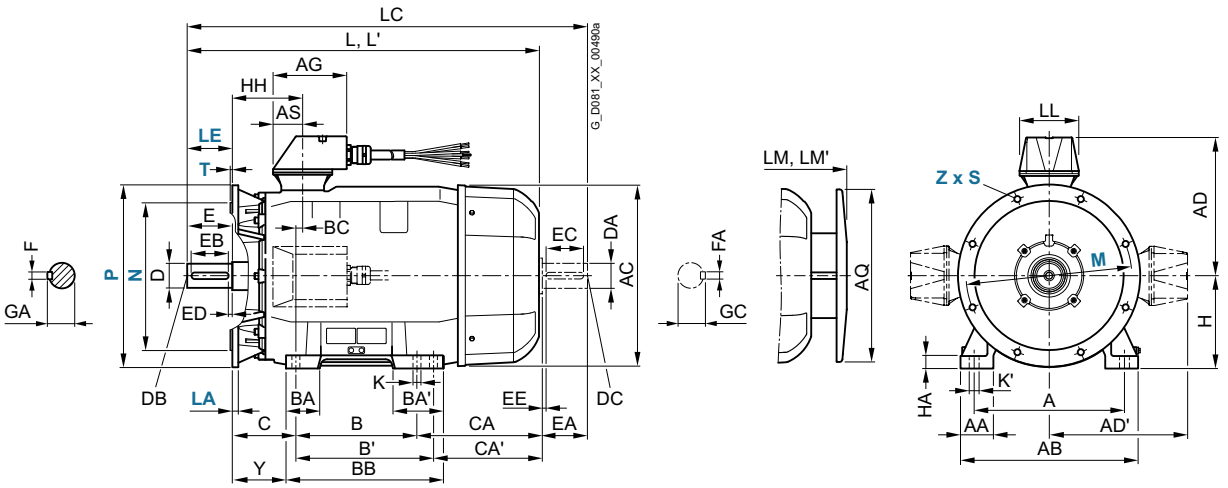

For motor Frame size	Type		No. of poles	Dimension designation acc. to **IEC** HH	K	K'	L	LC [1]	LL	LM	DE shaft extension D	DB	E	EB	ED	F	GA	NDE shaft extension DA	DC	EA	EC	EE	FA	GC
280 S	1PC1301	2DA0	2	210	24	30	960	1105	180	1070	65	M20	140	125	10	18	69	60	M20	140	125	10	18	64
		2DB0, 2DC0	4, 6								75					20	79.5	65						69
	1PC1304	2DA0	2								65					18	69	60						64
		2DB0	4								75					20	79.5	65						69
280 M	1PC1301	2DA2	2	210	24	30	960	1105	180	1070	65	M20	140	125	10	18	69	60	M20	140	125	10	18	64
		2DB2	4								75					20	79.5	65						69
		2DC2	6																					
	1PC1304	2DA2	2				1070	1215		1180	65					18	69	60						64
		2DB2	4								75					20	79.5	65						69
315 S	1PC1301	3AA0	2	238	28	35	1052	1197	242	1162	65	M20	140	125	10	18	69	60	M20	140	125	10	18	64
		3AB0, 3AC0	4, 6				1082	1227		1192	80		170	140	25	22	85	70					20	74.5
	1PC1304	3AA0	2				1052	1197		1162	65		140	125	10	18	69	60					18	64
		3AB0	4				1082	1227		1192	80		170	140	25	22	85	70					20	74.5
315 M	1PC1301	3AA2	2	238	28	35	1217	1362	242	1327	65	M20	140	125	10	18	69	60	M20	140	125	10	18	64
		3AB2	4				1247	1392		1357	80		170	140	25	22	85	70					20	74.5
		3AC2	6				1082	1227		1192														
	1PC1304	3AA2	2				1217	1362		1327	65		140	125	10	18	69	60					18	64
		3AB2	4				1247	1392		1357	80		170	140	25	22	85	70					20	74.5
315 L	1PC1301	3AA4	2	238	28	35	1217	1362	242	1327	65	M20	140	125	10	18	69	60	M20	140	125	10	18	64
		3AB4, 3AC4	4, 6				1247	1392		1357	80		170	140	25	22	85	70					20	74.5
		3AA5	2				1372	1517		1482	65		140	125	10	18	69	60					18	64
		3AB5	4				1402	1547		1512	80		170	140	25	22	85	70					20	74.5
		3AC5	6				1247	1392		1357														
		3AC6	6				1402	1547		1512														
	1PC1304	3AA4	2				1217	1362		1327	65		140	125	10	18	69	60					18	64
		3AB4	4				1247	1392		1357	80		170	140	25	22	85	70					20	74.5
		3AA5	2				1372	1517		1482	65		140	125	10	18	69	60					18	64
		3AB5	4				1402	1547		1512	80		170	140	25	22	85	70					20	74.5

[1] In the low-noise version, a second shaft extension and/or mounted encoder is not possible.

© Siemens AG 2018

Dimensional drawings

Type of construction IM B3

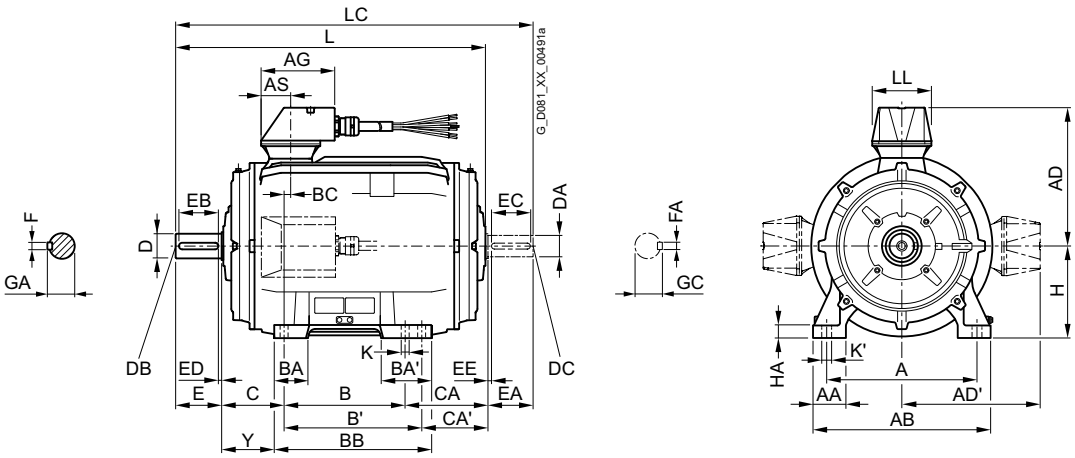

Types of construction IM B5 and IM V1

For flange dimensions, see page 1/53 (**Z** = the number of retaining holes)

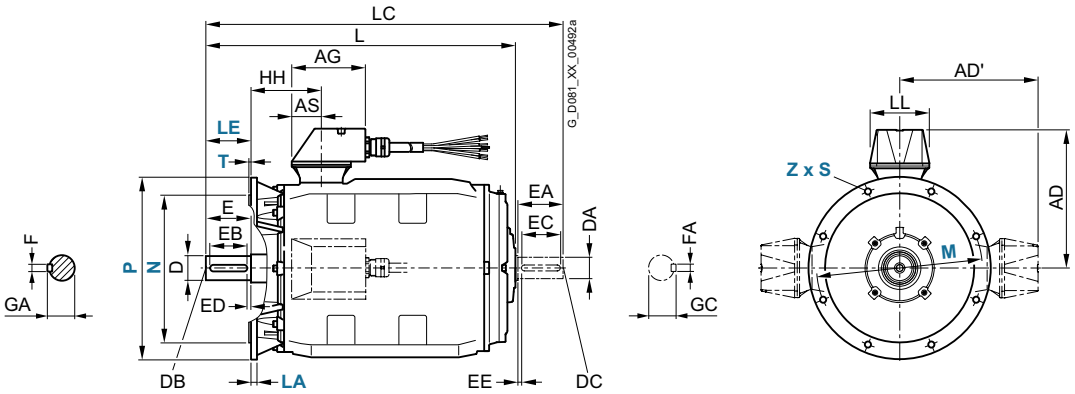

6

For motor	Type			Dimension designation acc. to **IEC**																		
Frame size			No. of poles	A	AA	AB	AD	AD'	AG	AH	AS	B	B'	BA	BA'	BB	BC	C	CA	CA'	H	HA	Y
180 M	1PC1301/ 1PC1304	1EA2, 1EB2	2, 4	279	65	339	244	244	100	468	50	241	279	85	120	328	34	121	94	56	180	20	95
180 L	1PC1301/ 1PC1304	1EB4	4 4	279	65	339	244	244	100	468	50	241	279	85	120	328	34	121	124	86	180	20	95
	1PC1301	1EC4	6																94	56			
200 L	1PC1301	2AA4, 2AA5	2	318	70	378	307	307	175	533	65	305	–	104	104	355	31	133	76	–	200	25	108
		2AB5, 2AC4	4, 6																				
		2AC5	6																				
	1PC1304	2AA4	2																				
		2AA5, 2AB5	2, 4																				
225 S	1PC1301/ 1PC1304	2BB0	4	356	80	436	328	328	175	556	65	286	311	92	117	361	15	149	99	74	225	34	124
225 M	1PC1301	2BA2	2	356	80	436	328	328	175	556	65	286	311	92	117	361	15	149	159	134	225	34	124
		2BB2, 2BC2	4, 6																				
	1PC1304	2BA2	2									311	–							–			
		2BB2	4																				
250 M	1PC1301	2CA2	2	406	100	490	398	398	224	620	90	349	–	102	102	409	24	168	111	–	250	40	138
		2CB2, 2CC2	4, 6																				
	1PC1304	2CA2	2																				
		2CB2	4																				

© Siemens AG 2018

Dimensional drawings (continued)

Type of construction IM B35

For flange dimensions, see page 1/53 (**Z** = the number of retaining holes)

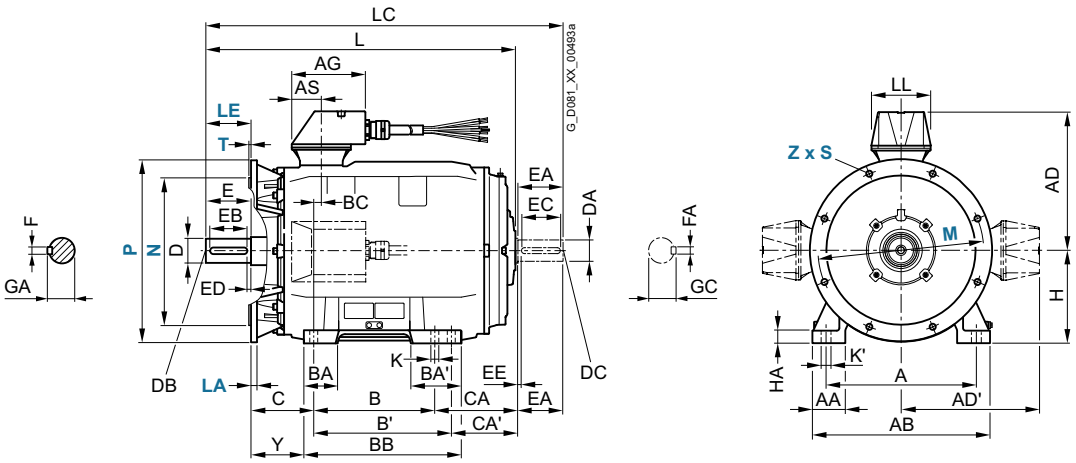

For motor	Type			Dimension designation acc. to **IEC**						DE shaft extension							NDE shaft extension						
Frame size			No. of poles	HH	K	K'	L	LC [1]	LL	D	DB	E	EB	ED	F	GA	DA	DC	EA	EC	EE	FA	GC
180 M	1PC1301/ 1PC1304	1EA2, 1EB2	2, 4	155	15	19	562	676	100	48	M16	110	100	5	14	51.5	48	M16	110	100	5	14	51.5
180 L	1PC1301/ 1PC1304	1EB4	4	155	15	19	592	706	100	48	M16	110	100	5	14	51.5	48	M16	110	100	5	14	51.5
	1PC1301	1EC4	6				562	676															
200 L	1PC1301	2AA4, 2AA5	2	164	19	25	617	734	130	55	M20	110	100	5	16	59	55	M20	110	100	5	16	59
		2AB5, 2AC4, 2AC5	4, 6 6																				
	1PC1304	2AA4	2																				
		2AA5, 2AB5	2, 4				642	759															
225 S	1PC1301/ 1PC1304	2BB0	4	164	19	25	610	724	130	60	M20	140	125	10	18	64	55	M20	110	100	5	16	59
225 M	1PC1301	2BA2	4	164	19	25	700	814	130	55	M20	110	100	5	18	59	48	M16	110	100	5	14	51.5
		2BB2, 2BC2	4, 6				730	844		60		140	125	10		64	55	M20				16	59
	1PC1304	2BA2	2				700	814		55		110	100	5	16	59	48	M16				14	51.5
		2BB2	4				730	844		60		140	125	10	18	64	55	M20				16	59
250 M	1PC1301	2CA2	2	192	24	30	764	878	180	60	M20	140	125	10	18	64	55	M20	110	100	5	16	59
		2CB2, 2CC2	4, 6					908		65						69	60		140	125	10	18	64
	1PC1304	2CA2	2					878		60						64	55		110	100	5	16	59
		2CB2	4					908		65						69	60		140	125	10	18	64

[1] In the low-noise version, a second shaft extension and/or mounted encoder is not possible.

© Siemens AG 2018

Dimensional drawings (continued)

Type of construction IM B3

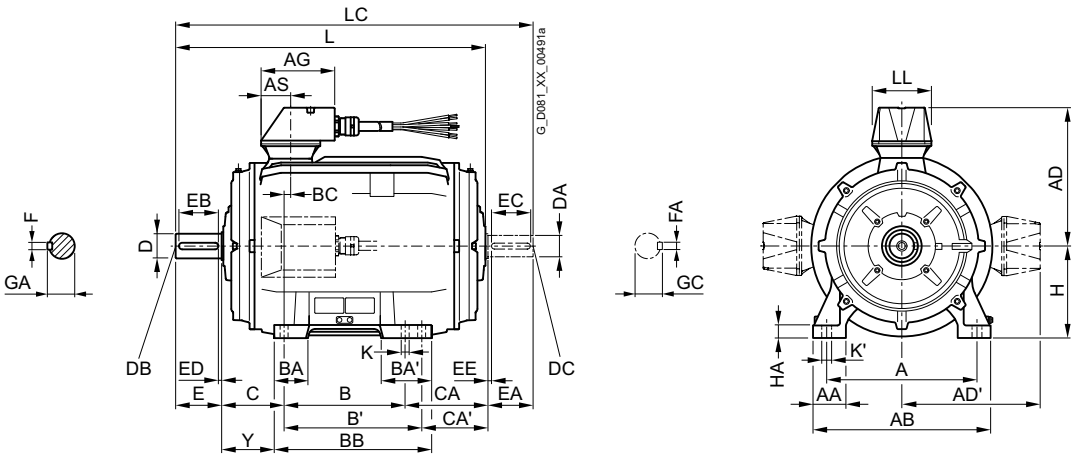

Types of construction IM B5 and IM V1

For flange dimensions, see page 1/53 (**Z** = the number of retaining holes)

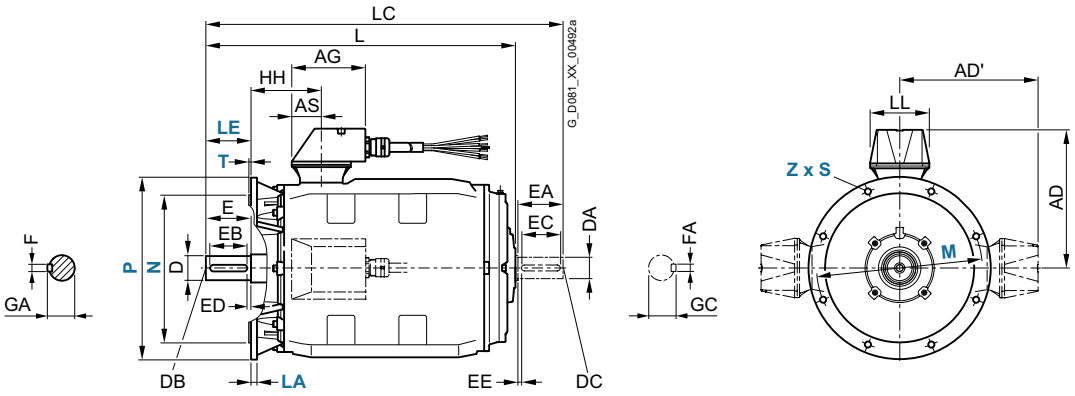

For motor Frame size	Type		No. of poles	Dimension designation acc. to **IEC** A	AA	AB	AD	AD'	AG	AH	AS	B	B'	BA	BA'	BB	BC	C	CA	CA'	H	HA	Y
280 S	1PC1301	2DA0	2	457	100	540	398	398	180	672	90	368	419	101	152	479	20	190	137	86	280	40	160
		2DB0, 2DC0	4, 6																				
	1PC1304	2DA0	2																				
		2DB0	4																				
280 M	1PC1301	2DA2	2	457	100	540	398	398	180	672	90	368	419	101	152	479	20	190	137	86	280	40	160
		2DB2, 2DC2	4, 6																				
	1PC1304	2DA2	2									419	–						247	196			
		2DB2	4																				
315 S	1PC1301	3AA0	2	508	120	610	455	455	242	780	121	406	457	113	170	527	22	216	148	97	315	50	181
		3AB0, 3AC0	4, 6																				
	1PC1304	3AA0	2																				
		3AB0	4																				
315 M [1]	1PC1301	3AA2	2	508	120	610	455	455	242	780	121	457	508	113	170	578	22	216	262	211	315	50	181
		3AB2	4									406	457			527			148	97			
		3AC2	6									457	508			578			262	211			
	1PC1304	3AA2	2																				
		3AB2	4																				
315 L [1]	1PC1301	3AA4	2	508	120	610	455	455	242	780	121	457	508	113	170	578	22	216	262	211	315	50	181
		3AB4, 3AC4	4, 6																				
		3AA5	2											176	227	648			417	366			146
		3AB5	4																				
		3AC5	6											113	170	578			262	211			181
		3AC6	6											176	227	648			417	366			146
	1PC1304	3AA4	2									508	–	113	170	578			262	211			181
		3AB4	4																				
		3AA5	2											176	227	648			477	366			146
		3AB5	4																				

[1] When ordering with screwed-on feet (as standard for right-hand side and left-hand side terminal box positions; optional for top terminal box position – order code **H01**) these screwed-on feet have 3 drill holes on the NDE with the respective dimension B 406, 457 and 508 mm; the dimension BB is 666 mm.

© Siemens AG 2018

Dimensional drawings (continued)

Type of construction IM B35

For flange dimensions, see page 1/53 (**Z** = the number of retaining holes)

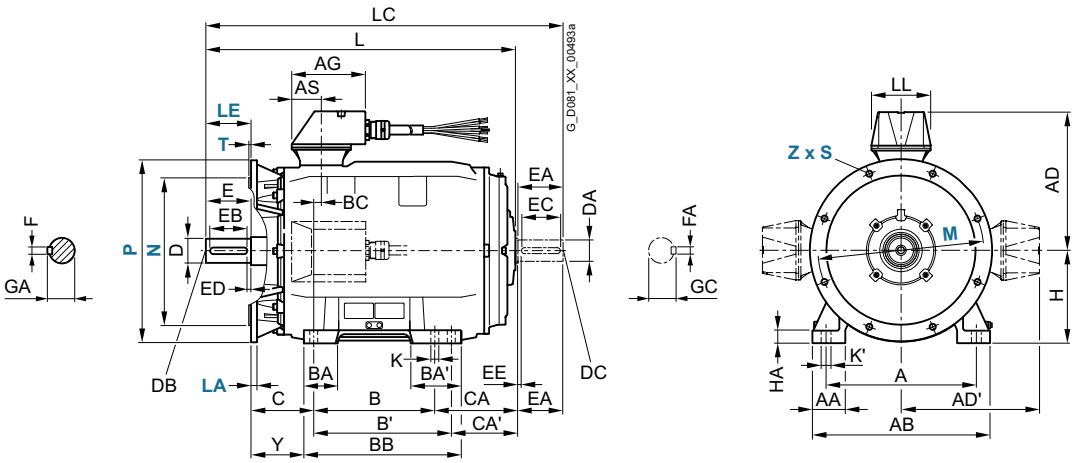

For motor Frame size	Type		No. of poles	Dimension designation acc. to **IEC** HH	K	K'	L	LC [1]	LL	DE shaft extension D	DB	E	EB	ED	F	GA	NDE shaft extension DA	DC	EA	EC	EE	FA	GC
280 S	1PC1301	2DA0	2	210	24	30	830	975	180	65	M20	140	125	10	18	69	60	M20	140	125	10	18	64
		2DB0, 2DC0	4, 6							75					20	79.5	65						69
	1PC1304	2DA0	2							65					18	69	60						64
		2DB0	4							75					20	79.5	65						69
280 M	1PC1301	2DA2	2	210	24	30	830	975	180	65	M20	140	125	10	18	69	60	M20	140	125	10	18	64
		2DB2, 2DC2	4, 6							75					20	79.5	65						69
	1PC1304	2DA2	2				940	1085		65					18	69	60						64
		2DB2	4							75					20	79.5	65						69
315 S	1PC1301	3AA0	2	238	28	35	905	1050	242	65	M20	140	125	10	18	69	60	M20	140	125	10	18	64
		3AB0, 3AC0	4, 6				935	1100		80		170	140	25	22	85	70					20	74.5
	1PC1304	3AA0	2				905	1050		65		140	125	10	18	69	60					18	64
		3AB0	4				935	1100		80		170	140	25	22	85	70					20	74.5
315 M	1PC1301	3AA2	2	238	28	35	1070	1215	242	65	M20	140	125	10	18	69	60	M20	140	125	10	18	64
		3AB2	4				1100	1245		80		170	140	25	22	85	70					20	74.5
		3AC2	6				935	1100															
	1PC1304	3AA2	2				1070	1215		65		140	125	10	18	69	60					18	64
		3AB2	4				1100	1245		80		170	140	25	22	85	70					20	74.5
315 L	1PC1301	3AA4	2	238	28	35	1070	1215	242	65	M20	140	125	10	18	69	60	M20	140	125	10	18	64
		3AB4, 3AC4	4, 6				1100	1245		80		170	140	25	22	85	70					20	74.5
		3AA5	2				1225	1370		65		140	125	10	18	69	60					18	64
		3AB5	4				1255	1400		80		170	140	25	22	58	70					20	74.5
		3AC5	6				1100	1245															
		3AC6	6				1255	1400															
	1PC1304	3AA4	2				1070	1215		65		140	125	10	18	69	60					18	64
		3AB4	4				1100	1245		80		170	140	25	22	85	70					20	74.5
		3AA5	2				1225	1370		65		140	125	10	18	69	60					18	64
		3AB5	4				1255	1400		80		170	140	25	22	85	70					20	74.5

[1] In the low-noise version, a second shaft extension and/or mounted encoder is not possible.

© Siemens AG 2018

Orientation

Overview

Low-voltage motors in the marine version can be used below deck on ships and in the offshore industry. The thermal utilization of the motors is adapted to the generally higher ambient temperatures onboard ships. If the application demands compliance with additional regulations, such as explosion protection (Directive 94/9/EC (ATEX 95)), the appropriate motor series must be chosen.

The motors on board ships are generally subdivided into three classes of importance by the marine classification societies in cooperation with customers, depending on the field of application:

- **Essential Service for Propulsion** or also referred to as Primary Essential Service
- **Essential Service** or also referred to as Secondary Essential Service or Important Service
- **Non-Essential Service** or also referred to as Non-Important Service

The class of importance must be specified by the customer (ordering party). Retrospective certification by means of individual acceptance test or construction supervision cannot be issued.

The categories include the following requirements of the classification societies:

	Class of importance		
	Essential Service for Propulsion	**Essential Service**	**Non-Essential Service**
Typical applications	Propeller drive, thruster	Thrusters, lateral thrust units, anchor winches, bilge and ballast pumps, fire-fighting pumps	Pumps for service water
Version	In accordance with the regulations set up by the classification society		In accordance with ambient conditions set up by the classification society
Acceptance test certificate	Acceptance test certificate 3.2 in accordance with EN 10204	Acceptance test certificate 3.1 in accordance with EN 10204	None
Individual acceptance by classification society	Necessary if no type test certificate exists or the rated power lies above the limit defined by the classification society		Not required
Type test	Not a requirement of the classification societies For standard motors up to frame size 315 L, a type test certificate is supplied. These motors can only be ordered with options E11 to E54 in accordance with the classification society.		
Ordering several identical motors	Differentiation between the first motor and additional ones must be realized when ordering using an order code		No distinction
Rating plate data	Information about ambient conditions of the classification society		
Stamp of the classification society	Stamp on shaft and housing		No stamp

Classification societies

Society	Abbreviation	Location
American Bureau of Shipping	**ABS**	USA
Bureau Veritas	**BV**	France
DNV GL Maritime	**DNV GL**	Germany
Korean Register	**KR**	Korea
Lloyds Register	**LR**	UK
Registro Italiano Navale	**RINA**	Italy
Russian Maritime Register of Shipping	**RS**	Russia

© Siemens AG 2018

Overview (continued)

Type test (type approval)

All 1LE1, 1MB1, 1PC1, 1PC3 motors are manufactured and type tested in accordance with the regulations set up by the following international classification societies:

- ABS (American Bureau of Shipping)
- BV (Bureau Veritas, France)
- DNV GL Maritime
- KR (Korean Register of Shipping)
- LR (Lloyds Register of Shipping)
- Registro Italiano Navale (RINA)
- Russian Maritime Register of Shipping (RS)

Special versions that differ from the range defined in the catalog are possible on request.

Benefits

The marine motors offer the user a number of advantages and benefits:

- Cast-iron versions can be supplied for corrosive atmospheres especially for high humidity levels and salty air
- Increased corrosion protection using specially designed paint finishes is available
- Certified marine motors can be supplied for use in areas to be protected against explosion (hazardous zones)
- Due to the existing type test, individual acceptance test in power ranges below the power limits defined by the classification societies is not required which means short delivery times
- In depth know-how regarding customer requirements
- Worldwide service network with 24 hour service hotline for motors and converters

© Siemens AG 2018

Orientation

Application

Our type tested marine motors are specially designed for use on board ship below deck and for the offshore industry:

- Applications on ships as main and auxiliary drives below deck, e.g.:
  - Fans (air conditioning systems, refrigeration systems)
  - Pumps (for fire-extinguishing water, fuels, oils)
  - Winches (anchor winches, warping winches, lifting gear)
  - Compressors
  - Bow thruster drives
  - Ex motors for hazardous zones
- Application in the offshore industry
  - Coastal areas, e.g. oil rigs, drilling ships

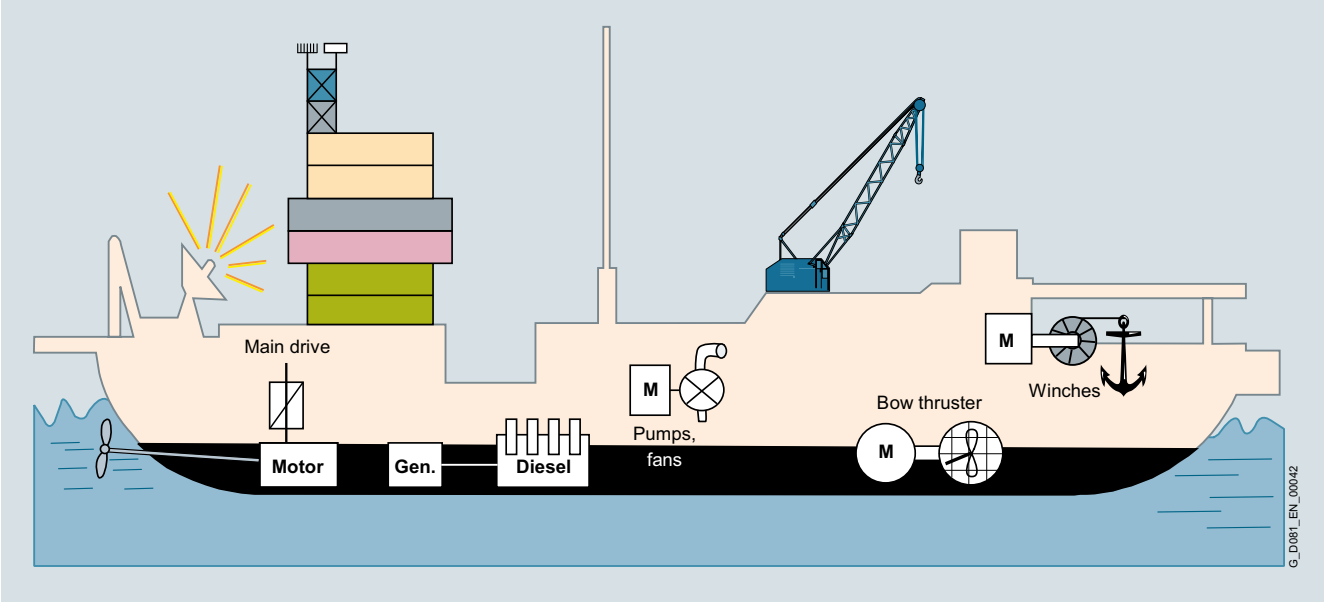

Typical below-deck applications

Technical specifications

Housing design

Motors can be supplied depending on the motor series in a corrosion-resistant aluminum housing and in a rugged low-vibration cast-iron version.

Motor connection

Cable glands are not included in the standard scope of supply with the exception of explosion-proof motors (see "Special versions").

All marine motors generally have an external grounding terminal.

Mountings (rotary pulse encoder, separately driven fan, brake)

Brakes, encoders and separately driven fans from our basic series (1LE, 1MB) are accepted as mountings without a separate certificate from the marine classification societies by the following: GL, LR, RINA, RS, DNV, ABS and KR.

However, BV always demands separate certification for encoders. For this reason, 1LE1, 1MB1, 1PC1 and 1PC3 motors for BV can only be supplied in the "prepared for encoder mounting" condition. In this instance, the customer must bear responsibility for purchasing and installing a suitable encoder. With respect to brakes and separately driven fans, BV will also accept Siemens standard components.

Fan / fan cover

Fans and fan covers are made from the same materials as components from the basic series. BV stipulates that these components must be made of metal, and they are automatically supplied in this material when order code **E31** is specified.

© Siemens AG 2018

Technical specifications (continued)

Specifications of the individual classification societies with order codes (options) for motors in frame sizes 71 M - 315 L

Classification society	Coolant temperature CT	Admissible temperature rise limit according to the classification society		Rated power limit for individual acceptance test for essential service drive	Rated power limit for construction supervision for essential service drive	Order codes for surface-cooled motors up to frame size 315 L with type test certificate
		Temperature class				
		130 (B)	155 (F)			
	°C	K	K	kW	kW	
LR	45	70	95	≥ 100	≥ 100	E21
BV	45	75	100	≥ 100	–	E31
DNV GL	45	75	100	≥ 300	–	E51
ABS	50	70	95	≥ 100 [1)]	–	E52
RINA	45	75	100	≥ 100	–	E41
RS	45	75	95	≥ 20	–	E46
KR	45	75	95	≥ 7.5	–	E54

Type test certificates

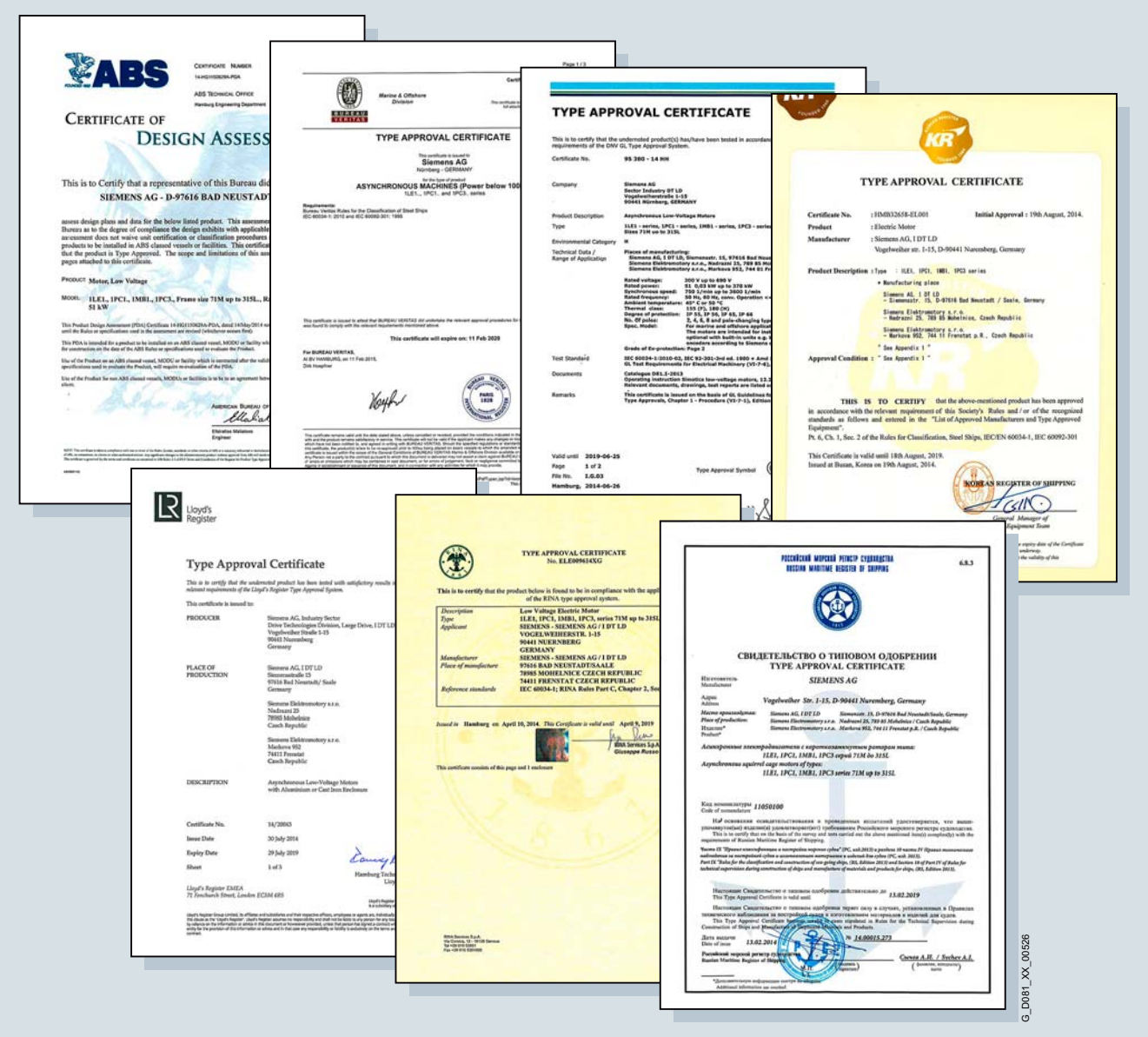

[1)] Required for all ratings for ATEX compliance.

© Siemens AG 2018

Technical specifications (continued)

Temperature class and coolant temperature

SIMOTICS GP/SD standard motors and SIMOTICS XP explosion-proof motors up to frame size 315 L

In general, marine motors are designed for a coolant temperature CT 45 °C in temperature class 155 (F) – used according to 155 (F) – with thermal reserve. When motors are used according to temperature class 130 (B) (order code **N05**), derating is required. For standard motors up to frame size 315 L, the derating is approx. 4 % (for order codes **E52** and **E21** approx. 8 %).

1MB1 motors in Zones 2, 21 and 22 are designed for temperature class 155 (F) – used according to temperature class 130 (B) – with derating of approx. 4 % (with order code **E52** approx. 8 %). Motors with increased power in temperature class 155 (F) – used according to temperature class 155 (F) – are also derated by approx. 4 % (with order code **E52** and **E21** approx. 8 %). If temperature class 155 (F) is to be used according to 130 (B), further derating of approximately 10 % is required.

Coolant temperatures that exceed CT 45 °C require derating in accordance with the following table:

	Coolant temperature CT			
	45 °C	50 °C	55 °C	60 °C
Temperature class 155 (F) used according to 155 (F)				
Derating factor for line operation	1.00	0.96	0.92	0.87

Non-standard motors SIMOTICS N-compact

For the non-standard motors 1LA8, 1PQ8 the following derating factors apply for increased coolant temperatures and with line operation:

	Coolant temperature CT			
	45 °C	50 °C	55 °C	60 °C
Temperature class 155 (F) used according to 155 (F)				
Derating factor for line operation	1.00	0.96	0.92	0.87
Temperature class 155 (F) used according to 130 (B)				
Derating factor for line operation	0.90	0.86	0.83	0.78

For the non-standard motors 1LA8, 1PQ8 the following derating factors apply for increased coolant temperatures and for converter operation:

	Coolant temperature CT			
	45 °C	50 °C	55 °C	60 °C
Temperature class 155 (F) used according to 155 (F)				
Derating factor for converter operation	0.96	0.92	0.87	0.82
Temperature class 155 (F) used according to 130 (B)				
Derating factor for converter operation	0.82	0.78	0.74	0.70

More detailed information is available on request.

Rating plate and acceptance test certificate

The rating plate indicates the relevant classification society and the associated coolant temperature

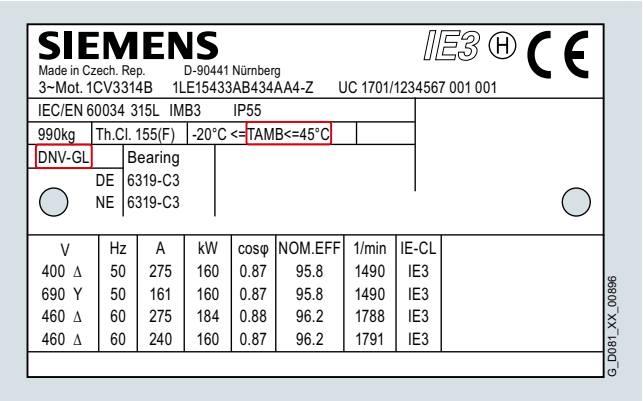

Rating plate for a marine motor according to DNV

Degree of protection

The protection classes applicable here are specified in the catalog sections for basic series 1LE1/1MB1/1PC1. With IP56, icing must be avoided.

Winding and motor protection

For monitoring the winding and bearings, the motors can be equipped with PTC thermistors, temperature sensors and resistance thermometers. Anti-condensation heaters can also be fitted to the marine motors to prevent condensation building up on the winding.

Paint finish

The standard paint finish is suitable for indoor installations or outdoor installations which are roof-protected against weathering.

When installing the standard motors in sea air or in rooms with permanent moisture, the special paint type climate group "world-wide" according to IEC 60721-2-1 is appropriate, because this ensures a higher degree of corrosion protection. Most marine motors are finished in this special paint type as standard (see "Special versions").

With particularly corrosive atmospheres, the sea-air-resistant special paint finish C4 (order code **S03**) or the offshore special paint system C5 (order code **S04**) is recommended.

Special paint colors and increased layer thicknesses are available on request.

Converter operation

The standard insulation of the motors is designed such that converter operation is permissible at line voltages up to $U_{rated} \leq 500$ V. The following limit values (voltage values are peak values) must be maintained: $\hat{U}_{phase\text{-}to\text{-}phase} \leq 1500$ V, $\hat{U}_{phase\text{-}to\text{-}ground} \leq 1100$ V, voltage rise times of $t_s > 0.1$ µs. Operation of motors at higher voltage peaks (e.g. on converters with controlled input, e.g. AFE, ALM) requires motors with higher insulation resistance.
Please inquire in this case.

During installation, the EMC guidelines must be complied with. This does not apply to motors in type of protection Ex eb according to IEC/EN 60079-2 that are certified only for line operation.

It is important to note the extent to which the converter used must also be acceptance tested by the marine classification authority.

© Siemens AG 2018

Technical specifications (continued)

Recommended special versions

- Motor protection with 1 or 3 PTC thermistors – for tripping (2 terminals) – 15th position of the Article No. **B**
- Installation of Pt100 resistance thermometers for winding temperature monitoring – 16th position of the Article No. **"H"**
- Specially for motor series 1LA8, 1PQ8 and 1LL8: Installation of 2 Pt100 screw-in resistance thermometers in basic circuit for roller bearings – order code **A72**
- Anti-condensation heating for 230 V – order code **Q02**
- Anti-condensation heating for 115 V – order code **Q03**
- IP56 degree of protection for protection against harmful dust deposits, protection against water jets from any direction – order code **H22**
- IP65 degree of protection for complete protection against dust deposits, protection against water jets from any direction – order code **H20**
  Not possible for 1LA8, 1PQ8 and 1LL8 non-standard motors
- Special bearing for drive-end (DE) and non-drive-end (NDE), bearing size 63 – order code **L25**, for non-standard motors on request
- Metal external fan for self-ventilated motors – order code **F76** (standard with order code **E31**)

Additional notes

Order information

The fees levied by the classification societies for individual acceptance testing are included in order code **B10** for motor types 1LE1, 1MB1, 1PC1 and 1PC3.

When ordering, add the supplement **-Z** to the Article No. and state details in plain text if required.

For information about other special versions, refer to the appropriate sections under "SIMOTICS GP/SD 1LE1/1PC1 standard motors" and "SIMOTICS XP 1MB1 explosion-proof motors".

In addition to this, for marine motors, the following special versions are the "Standard version" and therefore included in the order codes for the basic marine version.

Standard version:

Designation	Order code
Acceptance test certificate 3.1 in accordance with EN 10204 Note: The delivery time for the factory test certificate may differ from the delivery time for the motor.	**B02**
External grounding terminal	**H04**

Ordering example

Selection criteria	Requirement	Structure of the Article No.
Motor type	SIMOTICS SD Basic Line, efficiency class IE3 Premium Efficiency, IP55 degree of protection, IM B3 type of construction without winding protection, terminal box at top	**1LE1503**
No. of poles, speed, rated power	4-pole, 1500 rpm, 55 kW	**1LE1503-2CB2**
Voltage, frequency	400 VΔ/690 VY, 50 Hz	**1LE1503-2CB23-4**
Type of construction	IM B3	**1LE1503-2CB23-4A**
Motor protection	1 or 3 PTC thermistors – for tripping (2 terminals)	**1LE1503-2CB23-4AB**
Terminal box position	Terminal box right	**1LE1503-2CB23-4AB5**
Paint finish	Paint finish in "Brilliant blue" RAL 5007	**1LE1503-2CB23-4AB5-Z Y53** Plain text: **RAL5007**
Marine version	Drive for "Essential Services" with type test certificate according to **DNV GL Maritime** with coolant temperature CT 45 °C	**1LE1503-2CB23-4AB5-Z Y53+E51** Plain text: **RAL5007**
	Individual acceptance (by marine classification society)	**1LE1503-2CB23-4AB5-Z Y53+E51+B10** Plain text: **RAL5007**
Motor order		
	Type test with temperature-rise run for horizontal motors, with acceptance	**1LE1503-2CB23-4AB5-Z Y53+E51+B10+B83** Plain text: **RAL5007**

The ordering example is valid for an order quantity of 1 item. For larger order quantities, a type test with heat run (order code **B83**) has only to be ordered for one motor.
It is not necessary to specify order code **B83** for any further identical motors (included in the same order).
The order must be divided into two order items; see "Example for 5 identical motors".

Example for 5 identical motors

Order item	Quantity in units	Article No.
1	1	**1LE1503-2CB23-4AB5-Z Z=Y53+E51+B10+B83** Plain text: **RAL 5007**
2	4	**1LE1503-2CB23-4AB5-Z Z=Y53+E51+B10** Plain text: **RAL 5007**

© Siemens AG 2018

Selection and ordering data

Special versions	Additional identification code **-Z** with order code and plain text if required	Frame size 71	80	90	100	112	132	160	180	200	Motor version	
					1LE1004						IEC	IE4
			1LE1003									IE3
		1LE1001										IE2
		1LE1002										IE1
			1LE1023								Eagle Line	NPE (NEMA)
				1LE1021								NEE (NEMA)
					1LE1011						Pole-changing	
1LE10 . . - . . . . . - . . . . -Z	Order code				1LE1012							
Marine version – Basic version												
With type test certificate according to Lloyds Register (LR), CT 45 °C, temperature class 155 (F), utilized according to 155 (F)	**E21**	–	✓	✓	✓	✓	✓	✓	✓	✓		
With type test certificate according to Bureau Veritas (BV), CT 45 °C, temperature class 155 (F), utilized according to 155 (F)	**E31**	–	✓	✓	✓	✓	✓	✓	✓	✓		
With type test certificate according to Registro Italiano Navale (RINA), CT 45 °C, temperature class 155 (F), utilized according to 155 (F)	**E41**	–	✓	✓	✓	✓	✓	✓	✓	✓		
With type test certificate according to Russian Maritime Register (RS), CT 45 °C, temperature class 155 (F), utilized according to 155 (F)	**E46**	–	✓	✓	✓	✓	✓	✓	✓	✓		
With type test certificate according to DNV GL Maritime, CT 45 °C, temperature class 155 (F), utilized according to 155 (F)	**E51**	–	✓	✓	✓	✓	✓	✓	✓	✓		
With type test certificate according to American Bureau of Shipping (ABS), CT 50 °C, temperature class 155 (F), utilized according to 155 (F)	**E52**	–	✓	✓	✓	✓	✓	✓	✓	✓		
With type test certificate according to Korean Register of Shipping (KR), CT 45 °C, temperature class 155 (F), utilized according to 155 (F)	**E54**	–	✓	✓	✓	✓	✓	✓	✓	✓		
Marine version – Acceptance/certification												
Individual acceptance by marine classification society	**B10**	–	✓	✓	✓	✓	✓	✓	✓	✓		
Type test with warm run for horizontal motors, with acceptance	**B83**	–	✓	✓	✓	✓	✓	✓	✓	✓		

✓ With additional charge
– Not possible

6

© Siemens AG 2018

Selection and ordering data

Special versions	Additional identification code **-Z** with order code and plain text if required	Frame size													Motor version	
		71	**80**	**90**	**100**	**112**	**132**	**160**	**180**	**200**	**225**	**250**	**280**	**315**		
					1LE1504 Basic Line										IEC	IE4
					1LE1604 Performance Line											
		1LE1503 Basic Line														IE3
					1LE1603 Performance Line											
		1LE1501 Basic Line														IE2
					1LE1601 Performance Line											
		1LE1523 Basic Line													Eagle Line	NPE (NEMA)
					1LE1623 Performance Line											
1LE1 . . . - . . . . . - . . . . -Z	Order code				**1LE1521 Basic Line**											NEE (NEMA)
Marine version – Basic version																
With type test certificate according to Lloyds Register (LR), CT 45 °C, temperature class 155 (F), utilized according to 155 (F)	**E21**	–	✓	✓	✓	✓	✓	✓	✓	✓	✓	✓	✓	✓		
With type test certificate according to Bureau Veritas (BV), CT 45 °C, temperature class 155 (F), utilized according to 155 (F)	**E31**	–	✓	✓	✓	✓	✓	✓	✓	✓	✓	✓	✓	✓		
With type test certificate according to Registro Italiano Navale (RINA), CT 45 °C, temperature class 155 (F), utilized according to 155 (F)	**E41**	–	✓	✓	✓	✓	✓	✓	✓	✓	✓	✓	✓	✓		
With type test certificate according to Russian Maritime Register (RS), CT 45 °C, temperature class 155 (F), utilized according to 155 (F)	**E46**	–	✓	✓	✓	✓	✓	✓	✓	✓	✓	✓	✓	✓		
With type test certificate according to DNV GL Maritime, CT 45 °C, temperature class 155 (F), utilized according to 155 (F)	**E51**	–	✓	✓	✓	✓	✓	✓	✓	✓	✓	✓	✓	✓		
With type test certificate according to American Bureau of Shipping (ABS), CT 50 °C, temperature class 155 (F), utilized according to 155 (F)	**E52**	–	✓	✓	✓	✓	✓	✓	✓	✓	✓	✓	✓	✓		
With type test certificate according to Korean Register of Shipping (KR), CT 45 °C, temperature class 155 (F), utilized according to 155 (F)	**E54**	–	✓	✓	✓	✓	✓	✓	✓	✓	✓	✓	✓	✓		
Marine version – Acceptance/certification																
Individual acceptance by marine classification society	**B10**	–	✓	✓	✓	✓	✓	✓	✓	✓	✓	✓	✓	✓		
Type test with warm run for horizontal motors, with acceptance	**B83**	–	✓	✓	✓	✓	✓	✓	✓	✓	✓	✓	✓	✓		

✓ With additional charge
– Not possible

© Siemens AG 2018

Selection and ordering data

Special versions	Additional identification code **-Z** with order code and plain text if required	Frame size		Motor version	
		315	**355**		
		1LE55.4 Basic Line		IEC	IE4
		1LE56.4 Performance Line			
		1LE55.3 Basic Line			IE3
1LE5 . . . - . . . . . - . . . . -Z	Order code	**1LE56.3 Performance Line**			
Marine version – Basic version					
With type test certificate according to Lloyds Register (LR), CT 45 °C, temperature class 155 (F), utilized according to 155 (F)	**E21**	✓	✓		
With type test certificate according to Registro Italiano Navale (RINA), CT 45 °C, temperature class 155 (F), utilized according to 155 (F)	**E41**	✓	✓		
With type test certificate according to Russian Maritime Register (RS), CT 45 °C, temperature class 155 (F), utilized according to 155 (F)	**E46**	✓	✓		
With type test certificate according to DNV GL Maritime, CT 45 °C, temperature class 155 (F), utilized according to 155 (F)	**E51**	✓	✓		
With type test certificate according to American Bureau of Shipping (ABS), CT 50 °C, temperature class 155 (F), utilized according to 155 (F)	**E52**	✓	✓		
Marine version – Acceptance/certification					
Individual acceptance by marine classification society	**B10**	✓	✓		
Type test with heat run for vertical motors, with acceptance	**B81**	✓	✓		
Type test with heat run for horizontal motors, with acceptance	**B83**	✓	✓		

✓ With additional charge

© Siemens AG 2018

Selection and ordering data

Special versions	Additional identification code **-Z** with order code and plain text if required	Frame size													Motor version		
		71	**80**	**90**	**100**	**112**	**132**	**160**	**180**	**200**	**225**	**250**	**280**	**315**			
Aluminum series			**1MB10.3**												IEC	Ex t (Zone 21/22)	IE3
			1MB10.1													Ex ec (Zone 2)	IE2
					1MB10.2												IE1
Cast-iron series		**1MB15.3 Basic Line**															IE3
					1MB16.3 Performance Line												
		1MB15.1 Basic Line															IE2
1MB1 . . . - . . . . . - . . . . -Z	Order code				**1MB16.1 Performance Line**												
Marine version – Basic version																	
With type test certificate according to Lloyds Register (LR), CT 45 °C, temperature class 155 (F), utilized according to 155 (F)	**E21**	✓	✓	✓	✓	✓	✓	✓	✓	✓	✓	✓	✓	✓			
With type test certificate according to Bureau Veritas (BV), CT 45 °C, temperature class 155 (F), utilized according to 155 (F)	**E31**	✓	✓	✓	✓	✓	✓	✓	✓	✓	✓	✓	✓	✓			
With type test certificate according to Registro Italiano Navale (RINA), CT 45 °C, temperature class 155 (F), utilized according to 155 (F)	**E41**	✓	✓	✓	✓	✓	✓	✓	✓	✓	✓	✓	✓	✓			
With type test certificate according to Russian Maritime Register (RS), CT 45 °C, temperature class 155 (F), utilized according to 155 (F)	**E46**	✓	✓	✓	✓	✓	✓	✓	✓	✓	✓	✓	✓	✓			
With type test certificate according to DNV GL Maritime, CT 45 °C, temperature class 155 (F), utilized according to 155 (F)	**E51**	✓	✓	✓	✓	✓	✓	✓	✓	✓	✓	✓	✓	✓			
With type test certificate according to American Bureau of Shipping (ABS), CT 50 °C, temperature class 155 (F), utilized according to 155 (F)	**E52**	✓	✓	✓	✓	✓	✓	✓	✓	✓	✓	✓	✓	✓			
With type test certificate according to Korean Register of Shipping (KR), CT 45 °C, temperature class 155 (F), utilized according to 155 (F)	**E54**	✓	✓	✓	✓	✓	✓	✓	✓	✓	✓	✓	✓	✓			
Marine version – Acceptance/certification																	
Individual acceptance by marine classification society	**B10**	✓	✓	✓	✓	✓	✓	✓	✓	✓	✓	✓	✓	✓			
Type test with warm run for horizontal motors, with acceptance	**B83**	✓	✓	✓	✓	✓	✓	✓	✓	✓	✓	✓	✓	✓			

✓ With additional charge

© Siemens AG 2018

Notes

© Siemens AG 2018

Appendix

7/2 NEMA motors
7/2 Motors according to NEMA standard

7/5 Industry Services
7/6 Industry Services – Portfolio
7/8 Online Support

7/9 Partner at Siemens · Industry Mall and Interactive Catalog CA 01
7/9 Partner at Siemens
7/9 Product Selection Using the Interactive CA01 Automation and Drives Catalog

7/10 Information and Download Center
7/10 Downloading Catalogs

7/11 Tools and engineering
7/11 Engineering Tool SIZER WEB ENGINEERING
7/12 Drive Technology Configurator selection tool
7/13 SinaSave energy efficiency tool
7/14 SIMOTICS EE-COMPARATOR
7/15 SIZER for Siemens Drives configuration tool
7/16 SIPLUS CMS condition monitoring systems for the continuous condition monitoring of motors

7/17 Indexes
7/17 Subject index
7/21 Index of order codes
7/29 Conversion tables

7/30 Metal surcharges
7/30 • Explanation of the raw material/ metal surcharges
7/31 • Explanation of the raw material/ metal surcharges for dysprosium and neodym (rare earths)
7/32 • Values of the metal factor

7/33 Conditions of sale and delivery
7/33 • 1. Additional Terms and Conditions
7/33 • 2. Prices
7/33 • 3. Additional Terms and Conditions
7/34 • 4. Export regulations

© Siemens AG 2018

Motors according to NEMA standard

NEMA motors (National Electrical Manufacturers Association) for the North American market distinguish themselves as a result of their new design – and especially as a result of their efficiency. Siemens offers a complete line of General Purpose motors (aluminum and cast-iron design), Severe Duty motors, IEEE 841 and XP motors with NEMA Premium or higher efficiencies. Energy-saving motors with NEMA Premium efficiency class comply with the US EISA legislation (Energy Independence and Security Act) for minimum efficiencies. Our NEMA Premium + efficiency class exceeds the efficiencies specified in the EISA standards.
The motors are mechanically and electrically compliant with NEMA MG1. In addition to the minimum efficiencies specified in the US, these motors also fulfill the minimum efficiency requirements for Canada (CSA) and Mexico (NOM).

General technical specifications

Voltage and power range	208 ... 230/460 V, 575 V, 60 Hz 1 ... 400 hp (0.75 ... 300 kW)
Frame sizes and types	NEMA frame sizes 140 ... 440
Pole number and frequencies	2, 4, 6 and 8-pole, 60 Hz
Environmental conditions	Surface-cooled with degree of protection IP54/IP55

Customer benefits

Copper die-cast rotors optimize the efficiency
Copper die-cast rotors reduce the power loss and slightly reduce the motor length. This version reduces the motor life cycle costs as a result of the lower energy consumption.

Can be easily modified for high versatility
Unmounted feet (aluminum housing) or 8-hole foot mounting (cast-iron housing) make it easier to modify the motors, ensure a high degree of versatility and reduce inventory costs – for the OEM as well as for servicing and maintenance.

A design that fulfills each and every requirement
We offer motors suitable for any application in a lightweight aluminum design or with a rugged cast-iron housing. Both variants are available with NEMA Premium or NEMA Premium + efficiency. The perfect fit for any operating period.

Typical applications

NEMA motors are suitable throughout the industrial and commercial field, in the automotive, textile, printing and chemical industries as well as in cross-industry applications – for example in conveyor technology. The HVAC sector (Heating, Ventilating & Air Conditioning), for instance, which requires extremely light motors, provides typical applications for our so-called General Purpose motors – either with cast-iron or aluminum housings. Severe Duty motors in a fully cast-iron design are suitable for use under harsh environmental conditions – for instance in the pulp and paper industry. The Severe Duty SD100 IEEE 841 motor version even exceeds the stringent IEEE 841 standards applicable in the crude oil and chemical industries.

More information

The full range of products with all ordering data and technical information can be found in Catalog
D 81.2, US/Canada www.sea.siemens.com/motors.

General Purpose

	GP100A	
Power range	1 ... 20 hp (0.75 ... 15 kW)	FS 140 ... 250
Frame size (FS)	140 ... 250	
Degree of protection NEMA MG1	TEFC (totally enclosed fan cooled)	
Housing material	Die-cast aluminum	8-hole foot mounting
Efficiency	NEMA Premium NEMA Premium +	FS 140 ... 250 FS 140 ... 250
Power supply	3-phase, 60 Hz	
Voltage	208 ... 230/460 V 575 V	FS 140 ... 250 FS 140 ... 250
Service factor	1.15	Sinusoidal
Electrical design	NEMA design B	
Hazard classification	Not specified	
Insulation	Class F	NEMA MG1 Part 31
Utilization	Class B at 1.0 SF, Class F at 1.15 SF	Sinusoidal
Terminal box (oversized)	Die-cast aluminum	FS 140 ... 250
Fan cover	Plastic	FS 140 ... 250
Fan	Bi-directional - Polypropylene	
Seal	O ring	FS 140 ... 250
Rotor material	Die-cast aluminum Die-cast copper	FS 140 ... 250 FS 140 ... 250
Stator winding	Copper – random wound	
Shaft material	High-strength carbon steel	C1045
Shaft seal/slinger	V-ring slinger meets IP54	(DE only)
Bearing housing	Cast aluminum	FS 140 ... 250
Bearing type	Double-shielded	FS 140 ... 250
Bearing inner cap	No	
Lubrication	Polyurea	Base grease
Oil filling nozzle	Not specified	
Oil drain valve	Not specified	
Vibrations	0.15 IPS	
Rating plate	Aluminum	Engraved
Condensation drainage hole	Condensation drainage holes – lowest point (2)	
Mountings	Rust-resistant	
Lifting eye	Cast	
Paint finish	ALKYED modified	RAL7030
Warranty	18 months	
Converter operation	VT 20:1 CT 4:1 CT 10:1	FS 140 ... 250 FS 140 ... 250 FS 140 ... 250 (Cu)
Catalog	**D 81.2, US/Canada**	

© Siemens AG 2018

			Severe Duty			
	GP100		**SD100**		**SD100 IEEE 841**	
	1 ... 200 hp (0.75 ... 132 kW)	FS 140 ... 440	1 ... 400 hp (0.75 ... 300 kW)	FS 140 ... S440	1 ... 400 hp (0.75 ... 300 kW)	FS 140 ... S440
	140 ... 440		140 ... S449		140 ... S449	
	TEFC (totally enclosed fan cooled)		TEFC (totally enclosed fan cooled)		TEFC (totally enclosed fan cooled)	
	Cast iron	8-hole foot	Cast iron	8-hole foot	Cast iron	8-hole foot
	NEMA Premium NEMA Premium +	FS 140 ... 440 FS 140 ... 250	NEMA Premium NEMA Premium +	FS 140 ... S440 FS 140 ... 250	NEMA Premium NEMA Premium +	FS 140 ... S440 FS 140 ... 250
	3-phase, 60 Hz		3-phase, 60 Hz		3-phase, 60 Hz	
	208 ... 230/460 V 230/460 V 460 V 575 V	FS 140 ... 250 FS 280 ... 360 100 ... 200 hp 1 ... 200 hp	208 ... 230/460 V 460 V 575 V	1 ... 20 hp 25 ... 400 hp 1 ... 400 hp	460 V 575 V	FS 140 ... S440 FS 140 ... S440
	1.15	Sinusoidal	1.15	Sinusoidal	1.15	Sinusoidal
	NEMA design B		NEMA design B		NEMA design B	
	Not specified		CL I Gr, C&D Div. 2	Optional	CL I Gr, C&D Div. 2	Optional
	Class F	NEMA MG1 Part 31	Class F	NEMA MG1 Part 31	Class F	NEMA MG1 Part 31
	Class B at 1.0 SF, Class F at 1.15 SF	Sinusoidal	Class B at 1.0 SF, Class F at 1.15 SF	Sinusoidal	Class B at 1.0 SF, Class F at 1.15 SF	Sinusoidal
	Die-cast aluminum Steel Cast iron	FS 140 ... 250 FS 280 ... 400 FS 440	Cast iron		Cast iron	
	Plastic Cast iron	FS 140 ... 250 FS 280 ... 440	Cast iron	FS 140 ... S440	Cast iron	FS 140 ... S440
	Bi-directional - Polypropylene		Bi-directional - Polypropylene - Bronze Counter-clockwise	FS 140 ... 440 FS S440 300 ... 400 hp 2P/4P	Bi-directional - Polypropylene - Bronze Counter-clockwise	FS 140 ... 440 FS S440 300 ... 400 hp 2P/4P
	O-ring Neoprene	FS 140 ... 250 FS 280 ... 440	Neoprene		Neoprene	
	Die-cast aluminum Die-cast copper	FS 140 ... 440 FS 140 ... 250	Die-cast aluminum Die-cast copper	FS 140 ... S440 FS 140 ... 250	Die-cast aluminum Die-cast copper	FS 140 ... S440 FS 140 ... 250
	Copper – random wound		Copper – random wound		Copper – random wound	
	High-strength carbon steel	C1045	High-strength carbon steel	C1045	High-strength carbon steel	C1045
	V-ring slinger meets IP54	(DE only)	V-ring slinger meets IP54	(DE, NDE)	Inpro/seal bearing insulation meets IP55	(DE, NDE)
	Cast iron	FS 140 ... 440	Cast iron	FS 140 ... S440	Cast iron	FS 140 ... S440
	Double-shielded Regreasable inlet and outlet	(FS 440 only)	Double-shielded Single-shielded Regreasable inlet and outlet	FS 140 ... 250 FS 280 ... S440	Double-shielded Single-shielded Regreasable inlet and outlet	FS 140 ... 250 FS 280 ... S440
	No		Cast iron		Cast iron	
	Polyurea	Base grease	Polyurea	Base grease	Polyurea	Base grease
	Alemite	FS 440 only	Alemite		Alemite	
	Plug	FS 440 only	Plug		Pressure relief (automatic)	
	0.15 IPS		0.08 IPS		0.06 IPS	
	Aluminum	Engraved	Stainless steel	Engraved	Stainless steel	Embossed
	Condensation drainage holes – lowest point (2)		T discharges – lowest point (2)		T discharges – lowest point (2)	
	Rust-resistant		Rust-resistant		Rust-resistant	
	Included	> 75 lb (> 34.0 kg)	Included	> 75 lb (> 34.0 kg)	Included	
	ALKYED modified	RAL7030	ALKYED modified	RAL7030	ALKYED modified	RAL7030
	18 months		36 months		60 months	
	VT 20:1 CT 4:1 CT 10:1	FS 140 ... 440 FS 140 ... 440 FS 140 ... 250 (Cu)	CT 20:1 CT 4:1 CT 10:1	FS 143 ... 365 FS 140 ... 440 FS 140 ... 250 (Cu)	CT 20:1 CT 4:1 CT 10:1	FS 143 ... 365 FS 140 ... 440 FS 140 ... 250 (Cu)
	D 81.2, US/Canada		**D 81.2, US/Canada**		**D 81.2, US/Canada**	

© Siemens AG 2018

Motors according to NEMA standard

	Explosion Proof				Definite Purpose	
	XP100		**XP100 ID1**		**SD10 MS**	
Power range	1 ... 300 hp (0.75 ... 200 kW)	FS 140 ... 440	1 ... 300 hp (0.75 ... 200 kW)	FS 140 ... 440	1 ... 200 hp (0.75 ... 160 kW)	4/8-pole – 1W VT
Frame size (FS)	140 ... 440		140 ... 440		140 ... 440	
Degree of protection NEMA MG1	TEFC (totally enclosed fan cooled)		TEFC (totally enclosed fan cooled)		TEFC (totally enclosed fan cooled)	
Housing material	Cast iron	8-hole foot	Cast iron	8-hole foot	Cast iron	8-hole foot
Efficiency	NEMA Premium	FS 140 ... 440	NEMA Premium	FS 140 ... 440	Standard	FS 140 ... 440
Power supply	3-phase, 60 Hz		3-phase, 60 Hz		3-phase, 60 Hz	
Voltage	208 ... 230/460 V 230/460 V 460 V 575 V	1 ... 20 hp 25 ... 100 hp 125 ... 300 hp 1 ... 300 hp	208 ... 230/460 V 230/460 V 460 V 575 V	1 ... 20 hp FS 280 ... 100 hp 125 ... 300 hp 1 ... 300 hp	460 V 575 V	FS 140 ... 440 FS 140 ... 440
Service factor	1.0	Sinusoidal	1.0	Sinusoidal	1.0	Sinusoidal
Electrical design	NEMA design B		NEMA design B		Not specified	
Hazard classification	CL I Gr. C&D, CL II F&G Div 1	Max. code T3C	CL I Gr. D, Div 1	Max. code T2A	Not specified	
Insulation	Class F	NEMA MG1 Part 31	Class F	NEMA MG1 Part 31	Class F	NEMA MG1 Part 31
Utilization	Class B at 1.0 SF, Class F at 1.15 SF	Sinusoidal	Class B at 1.0 SF, Class F at 1.15 SF	Sinusoidal not with 300, 250 hp, 4-pole	Class B at 1.0 SF, Class F at 1.15 SF	Sinusoidal not with 300, 250 hp, 4-pole
Terminal box (oversized)	Cast iron		Cast iron	FS 140 ... 440	Cast iron	FS 140 ... 440
Fan cover	Cast iron	FS 140 ... 440	Cast iron	FS 140 ... 440	Cast iron	FS 140 ... 440
Fan	Bi-directional - Polypropylene	FS 140 ... 440	Bi-directional - Polypropylene	FS 140 ... 440	Bi-directional - Polypropylene	FS 140 ... 440
Seal	Neoprene		Not specified	(lead seal)	Neoprene	
Rotor material	Die-cast aluminum		Die-cast aluminum		Die-cast aluminum	FS 140 ... 440
Stator winding	Copper – random wound NC protective device	FS 140 – 440 Included	Copper – random wound NC protective device	FS 140 – 440 Not specified	Copper – random wound	FS 140 ... 440
Shaft material	High-strength carbon steel	C1045	High-strength carbon steel	C1045	High-strength carbon steel	C1045
Shaft seal/ slinger	V-ring slinger meets IP54	(DE, NDE)	V-ring slinger meets IP54	(DE, NDE)	V-ring slinger meets IP54	(DE, NDE)
Bearing housing	Cast iron	FS 140 ... 440	Cast iron		Cast iron	FS 140 ... 440
Bearing type	Double-shielded Regreasable inlet and outlet	FS 140 ... 440	Double-shielded Regreasable inlet and outlet	FS 140 ... 440	Double-shielded Single-shielded Regreasable inlet and outlet	FS 140 ... 250 FS 280 ... S440
Bearing inner cap	Cast iron	FS 140 ... 440	Cast iron	FS 140 ... 440	Cast iron	FS 140 ... 440
Lubrication	Polyurea	Base grease	Polyurea	Base grease	Polyurea	Base grease
Oil filling nozzle	Alemite		Alemite		Alemite	
Oil drain valve	Plug		Plug		Plug	
Vibrations	0.08 IPS		0.08 IPS		0.08 IPS	
Rating plate	Stainless steel	Engraved	Stainless steel	Engraved	Stainless steel	Engraved
Condensation drainage hole	UL certification	FS 280 ... 440	UL certification	FS 280 ... 440	T discharges – lowest point (2)	
Mountings	Rust-resistant		Rust-resistant		Rust-resistant	
Lifting eye	Included	> 75 lb (> 34.0 kg)	Included	> 75 lb (> 34.0 kg)	Included	> 75 lb (> 34.0 kg)
Paint finish	ALKYED modified	RAL7030	ALKYED modified	RAL7030	ALKYED modified	RAL7030
Warranty	36 months		36 months		36 months	
Converter operation	VT 20:1 CT 4:1	FS 140 ... 440 FS 140 ... 320	VT 20:1 CT 4:1	FS 140 ... 440 FS 140 ... 440	Not specified	
Catalog	**D 81.2, US/Canada**		**D 81.2, US/Canada**		**D 81.2, US/Canada**	

© Siemens AG 2018

Overview

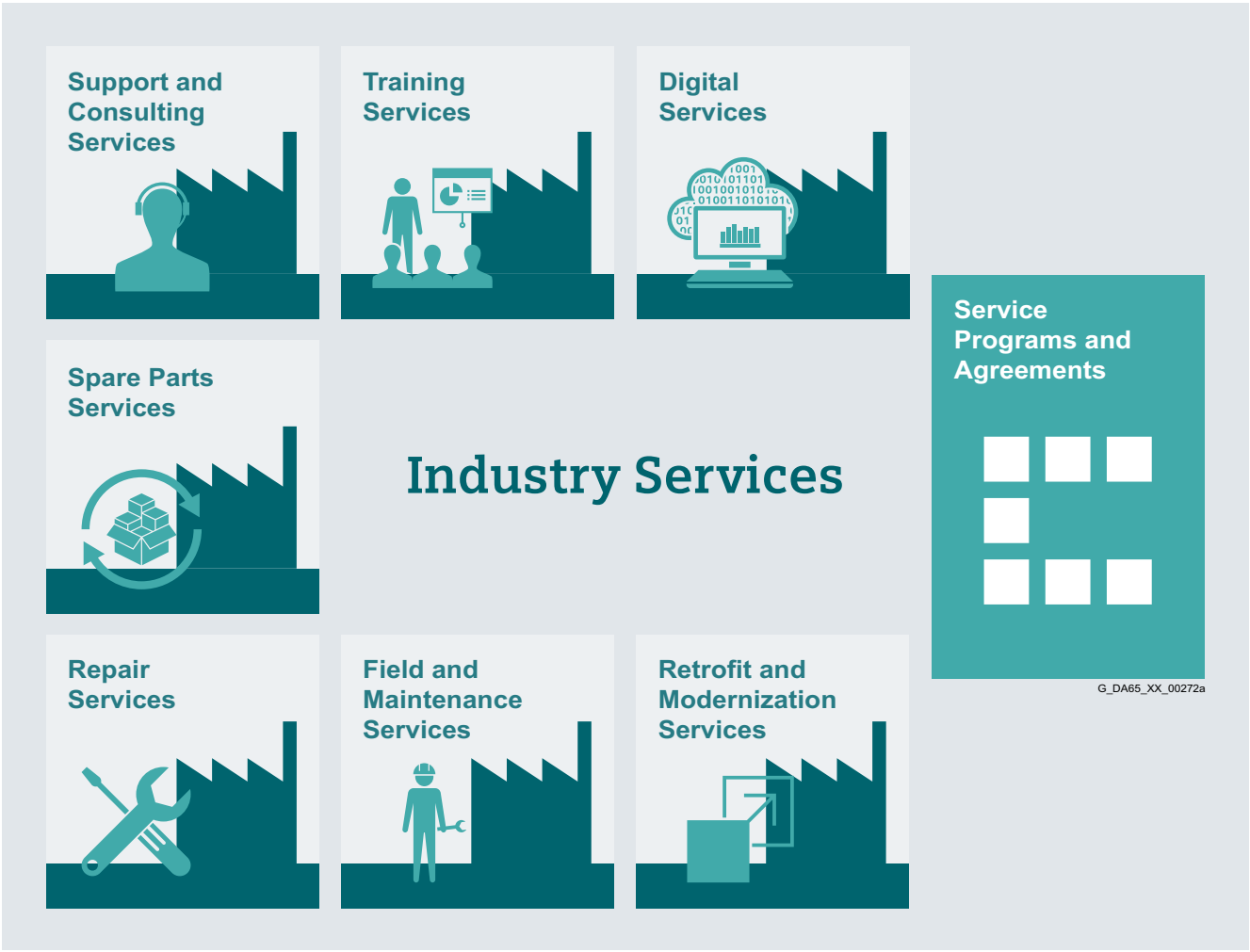

Keep your business running and shaping your digital future – with Industry Services

Optimizing the productivity of your equipment and operations can be a challenge, especially with constantly changing market conditions. Working with our service experts makes it easier. We understand your industry's unique processes and provide the services needed so that you can better achieve your business goals.

You can count on us to maximize your uptime and minimize your downtime, increasing your operations' productivity and reliability. When your operations have to be changed quickly to meet a new demand or business opportunity, our services give you the flexibility to adapt. Of course, we take care that your production is protected against cyber threats. We assist in keeping your operations as energy and resource efficient as possible and reducing your total cost of ownership. As a trendsetter, we ensure that you can capitalize on the opportunities of digitalization and by applying data analytics to enhance decision making: You can be sure that your plant reaches its full potential and retains this over the longer lifespan.

You can rely on our highly dedicated team of engineers, technicians and specialists to deliver the services you need – safely, professionally and in compliance with all regulations. We are there for you, where you need us, when you need us.

https://www.siemens.com/global/en/home/products/services/industry.html

© Siemens AG 2018

Industry Services – Portfolio overview

Overview

Digital Services make your industrial processes transparent to gain improvements in productivity, asset availability, and energy efficiency.

Production data is generated, filtered and translated with intelligent analytics to enhance decision-making.

This is done whilst taking data security into consideration and with continuous protection against cyber-attack threats.

https://www.siemens.com/global/en/home/products/services/industry/digital-services.html

Industry Online Support site for comprehensive information, application examples, FAQs and support requests.

Technical and Engineering Support for advice and answers for all inquiries about functionality, handling, and fault clearance. The Service Card as prepaid support for value added services such as Priority Call Back or Extended Support offers the clear advantage of quick and easy purchasing.

Information & Consulting Services, e.g. SIMATIC System Audit; clarity about the state and service capability of your automation system or Lifecycle Information Services; transparency on the lifecycle of the products in your plants.

https://support.industry.siemens.com/cs/ww/en/sc/2235

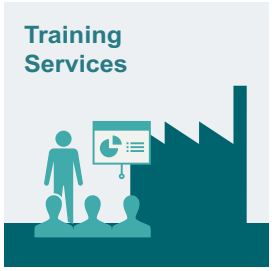

From the basics and advanced to specialist skills, SITRAIN courses provide expertise right from the manufacturer – and encompass the entire spectrum of Siemens products and systems for the industry.

Worldwide, SITRAIN courses are available wherever you need a training course in more than 170 locations in over 60 countries.

https://support.industry.siemens.com/cs/ww/en/sc/2226

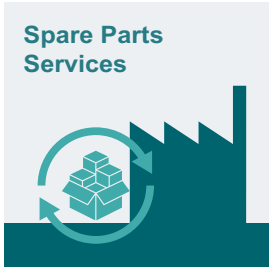

Spare Parts Services are available worldwide for smooth and fast supply of spare parts – and thus optimal plant availability. Genuine spare parts are available for up to ten years. Logistic experts take care of procurement, transport, custom clearance, storage and order management. Reliable logistics processes ensure that components reach their destination as needed.

Since not all spare parts can be kept in stock at all times, Siemens offers a preventive measure for spare parts provisioning on the customer's premises with optimized **Spare Parts Packages** for individual products, custom-assembled drive components and entire integrated drive trains – including risk consulting.

Asset Optimization Services help you design a strategy for parts supply where your investment and carrying costs are reduced and the risk of obsolescence is avoided.

https://support.industry.siemens.com/cs/ww/en/sc/2110

© Siemens AG 2018

Overview (continued)

Repair Services are offered on-site and in regional repair centers for fast restoration of faulty devices' functionality.

Also available are extended repair services, which include additional diagnostic and repair measures, as well as emergency services.

https://support.industry.siemens.com/cs/ww/en/sc/2154

Provide a cost-effective solution for the expansion of entire plants, optimization of systems or upgrading existing products to the latest technology and software, e.g. migration services for automation systems.

Service experts support projects from planning through commissioning and, if desired over the entire extended lifespan, e.g. Retrofit for Integrated Drive Systems for an extended lifetime of your machines and plants.

https://support.industry.siemens.com/cs/ww/de/sc/2286

Siemens specialists are available globally to provide expert field and maintenance services, including commissioning, functional testing, preventive maintenance and fault clearance.
All services can be included in customized service agreements with defined reaction times or fixed maintenance intervals.

https://support.industry.siemens.com/cs/ww/en/sc/2265

A technical Service Program or Agreement enables you to easily bundle a wide range of services into a single annual or multi-year agreement.

You pick the services you need to match your unique requirements or fill gaps in your organization's maintenance capabilities.

Programs and agreements can be customized as KPI-based and/or performance-based contracts.

https://support.industry.siemens.com/cs/ww/de/sc/2275

© Siemens AG 2018

Overview

Siemens Industry and Online Support with some 1.7 million visitors per month is one of the most popular web services provided by Siemens. It is the central access point for comprehensive technical know-how about products, systems and services for automation and drives applications as well as for process industries.

In connection with the challenges and opportunities related to digitalization you can look forward to continued support with innovative offerings.

© Siemens AG 2018

Partner at Siemens

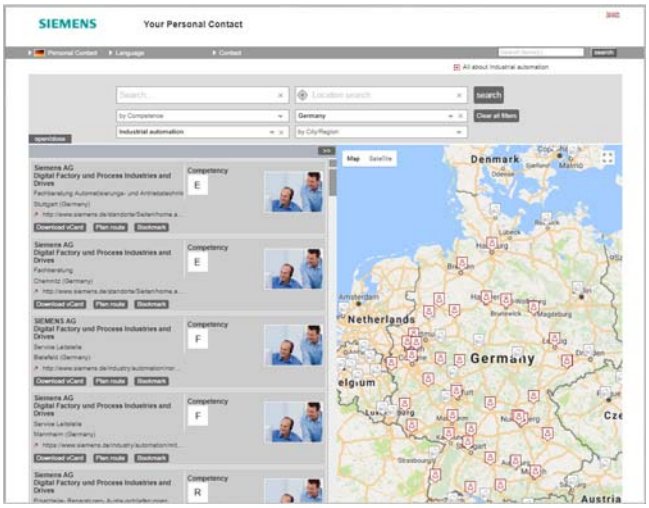

At your service locally, around the globe for consulting, sales, training, service, support, spare parts on the entire portfolio of Digital Factory and Process Industries and Drives.

Your partner can be found in our Personal Contacts Database at:
www.siemens.com/automation-contact

You start by selecting

- the required competence,
- products and branches,
- a country and a city

or by a

- location search or free text search.

Easy product selection and ordering in the Industry Mall and with the Interactive Catalog CA 01

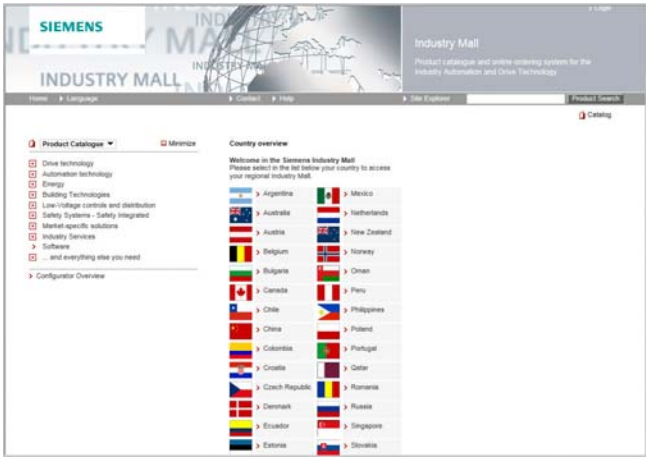

Industry Mall

The Industry Mall is a Siemens Internet ordering platform. Here you have a clear and informative online access to a huge range of products.

Powerful search functions make it easy to select the required products. Configurators enable you to configure complex product and system components quickly and easily. CAx data types are also provided here.

Data transfer allows the whole procedure, from selection through ordering to tracking and tracing, to be carried out online. Availability checks, customer-specific discounts and bid creation are also possible.

www.siemens.com/industrymall

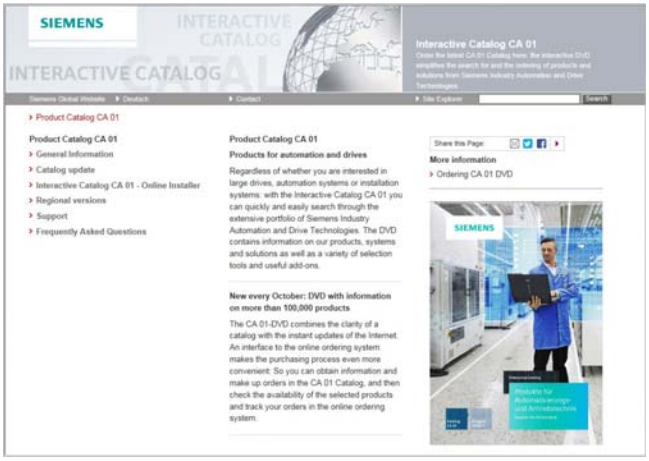

Interactive Catalog CA 01 - Products for Automation and Drives

The Interactive Catalog CA 01 combined with the Siemens Industry Mall unites the benefits of offline and online media in one application – the performance of an offline catalog with the availability of manifold and up-to-date information on the Internet.

Select products and assemble orders with the CA 01, determine the availability of the selected products and track & trace via the Industry Mall.

More information and download:
www.siemens.com/automation/ca01

© Siemens AG 2018

Information and Download Center

Downloading catalogs

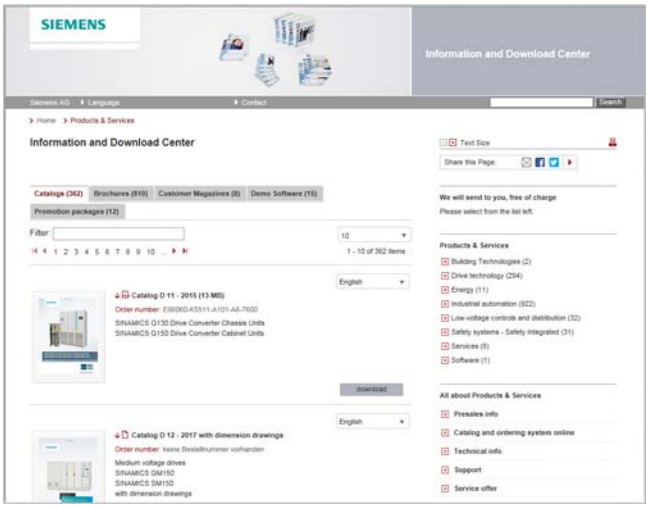

In the Information and Download Center you can download catalogs and brochures in PDF format without having to register.

The filter dialog makes it possible to carry out targeted searches.

www.siemens.com/industry/infocenter

© Siemens AG 2018

Overview

The SIZER WEB ENGINEERING tool is used to engineer motors, converters/inverters and drive systems for a broad spectrum of applications within a wide power range starting below 1 kW up to 30 MW and above. To engineer a solution, you need to enter parameters for the motor, converter/inverter or the system – as well as parameters for your own specific application.

When the process is complete, you will receive comprehensive technical documentation (e.g. 3D models) including price information.

An inquiry function integrated in SIZER WEB ENGINEERING allows you to design special solutions for your drive task.

SIZER WEB ENGINEERING fully supports you from the inquiry stage, through the process of engineering products and drive systems, until your own individual quotation is ready. It supplies pricing information and then transfers the engineered products to your shopping cart in the Industry Mall. Seamless support during the engineering process enables you to save time and increase your productivity because you only need to enter the data once. You can use the entered data and the result as a basis for inquiries and orders.

SIZER WEB ENGINEERING is the platform for flexible engineering of your drive tasks and user-friendly management of your projects in conjunction with the engineering tools Drive Technology Configurator and SIZER for Siemens Drives.

Function

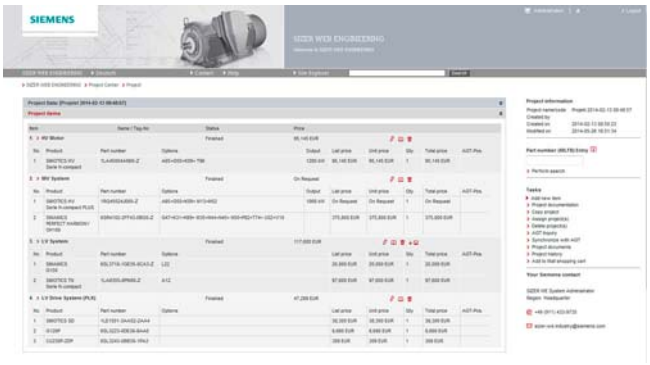

You can quickly find a solution for your drive task with the web-based tool: Menu-prompted workflows navigate you through the technical selection and dimensioning of products and drive systems, including the accessories. Based on an integrated inquiry functionality, SIZER WEB ENGINEERING also offers you special customized solutions for applications which cannot be addressed using "Standard Products", i.e. the focus is on flexibility and customized solutions.

Furthermore, you can engineer high-voltage motors, medium-voltage systems and rectifiers for your projects in addition to products from the low-voltage range. Integral tool functions also include comprehensive documentation such as data sheets, start-up calculations for low and high-voltage motors, 2D dimensional drawings and 3D CAD models, offer documentation to name just a few.

Access to the engineering tool

SIZER WEB ENGINEERING is available at the following website after registration and release:
www.siemens.com/sizer-we

More information

- More information on the SIZER WEB ENGINEERING engineering tool is available on the Internet at www.siemens.com/sizer-we
- Home page Selection and Engineering Tools: http://www.siemens.com/engineering-tools

© Siemens AG 2018

Drive Technology Configurator selection tool

Overview

The Drive Technology (DT) Configurator supports you when configuring the optimum drive technology products for your application – from gear units, motors, inverters as well as the associated options and components through to controllers, software licenses and connection systems. With or without detailed knowledge of products: Preselected product groups, targeted navigation through selection menus and direct product selection through entry of the article number support quick, efficient and convenient configuration.

In addition to all this, comprehensive documentation comprising technical data sheets, 2D/3D dimensional drawings, operating instructions, certificates, etc. can be selected in the DT Configurator. Immediate ordering is possible by simply transferring a parts list to the shopping cart of the Industry Mall.

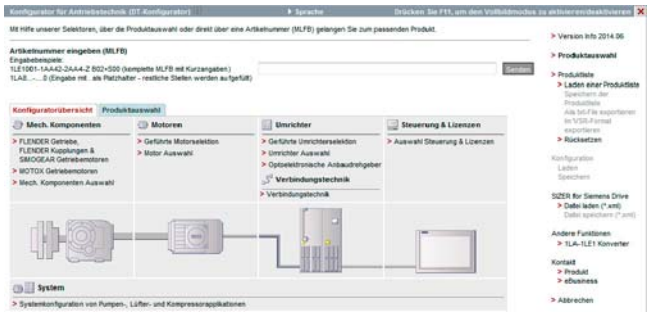

Drive Technology Configurator for efficient drive configuration with the following functions

- Fast, efficient configuration of drive products and associated components – gear units, motors, inverters, controllers, connection systems
- Configuration of drive systems for pump, fan and compressor applications from 1 kW to 2.6 MW
- Displayable documentation for configured products and components, such as
  - Data sheets in up to 7 languages in PDF or RTF format
  - 2D/3D dimensional drawings in various formats
  - Terminal box drawing and terminal connection diagram
  - Operating instructions
  - Certificates
  - Start-up calculation for SIMOTICS motors
  - EPLAN macros
- Support with retrofitting in conjunction with Spares On Web (www.siemens.com/sow)
- Ability to order products directly in the Siemens Industry Mall

Access to the Drive Technology Configurator

The Drive Technology Configurator can be called up without registration and without a login:
www.siemens.com/dt-configurator

Selection and ordering data

Description	Article No.
Interactive Catalog CA 01 on DVD-ROM including Drive Technology Configurator, English	**E86060-D4001-A510-D8-7600**

More information

Online access to Drive Technology Configurator

More information about the Drive Technology Configurator is available on the Internet at:
www.siemens.com/dtconfigurator

Offline access to the Drive Technology Configurator in the Interactive Catalog CA 01

In addition, the Drive Technology Configurator is also included in the Interactive Catalog CA 01 on DVD-ROM - the offline version of the Siemens Industry Mall.
The Interactive Catalog CA 01 can be ordered from the relevant Siemens sales office or via the Internet:
www.siemens.com/automation/CA01

© Siemens AG 2018

Overview

The SinaSave energy efficiency tool determines energy saving potential and amortization times based on your individual conditions of use and therefore offers practical assistance in making decisions about investments in energy-efficient technologies.

In SinaSave Version 6.0 and higher, the drive systems to be compared and the relevant drive component parameters are displayed graphically. An additional expansion includes numerous comparison possibilities for different control types and comprehensive product combinations for drive solutions for pump and fan applications. In addition to SIMOTICS motors and SINAMICS converters/inverters, the product portfolio comprises SIRIUS controls, offering a comprehensive range of comparison possibilities – according to your individual requirements.

SinaSave offers numerous comparison scenarios:

- Comparison of drive systems for pump and fan-applications in the power range from 0.55 kW (low voltage) to 5.5 MW (medium voltage) for
  - Reactor control (fixed speed; motor and switchgear)
  - Bypass control (fixed speed; motor and switchgear)
  - Speed control (variable speed; motor and inverter)
- Comparison and evaluation of standard motors (incl. ignition protection motors) in different energy efficiency classes

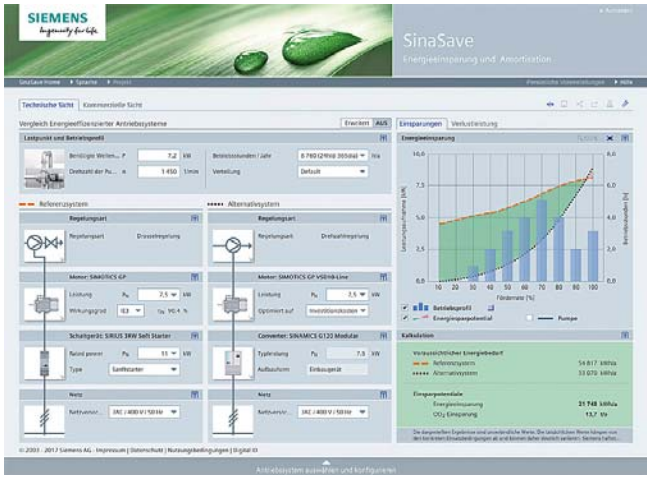

SinaSave supports the evaluation of different product and system comparisons by

- Displaying the potential savings for energy and energy costs as well as CO_2 emissions
- Estimation of the amortization time
- Estimation of the individual total lifecycle costs
- Representation of the system power losses according to EN 50598-2 for full load and partial load
- Direct comparison of Siemens drives with the reference Power Drive System (PDS) described in EN 50598-2

Access to the SinaSave energy efficiency tool

SinaSave can be accessed without the need for registration or logging in:
www.automation.siemens.com/sinasave

More information

For more information about the amortization calculator for energy-efficient drive systems, visit
www.siemens.com/sinasave

More information about services for energy saving is available on the Internet at
www.siemens.com/energy-saving

© Siemens AG 2018

SIMOTICS EE-COMPARATOR

Overview

The SIMOTICS EE-COMPARATOR app enables you to calculate potential savings and amortization times by making direct comparisons between Siemens SIMOTICS low-voltage motors in line or converter operation. In line operation, motors with different IE classifications (IE1, IE2, IE3 and IE4) can be compared taking individual operating periods and motor loads into account. In the new module for converter operation, a sample pump application enables you to identify the most cost-effective drive system based on load profiles.

The Regulations module provides you with information about local minimum efficiency requirements (so-called MEPS - Minimum Efficiency Performance Standards) of low-voltage induction motors for selected countries.

You can send the results calculated by the SIMOTICS EE-COMPARATOR directly from the app by e-mail.

New with version V1.3.1:

- New module for calculating the most efficient drive system in converter operation
- Partial-load efficiency calculations have been added to the line operation module
- New countries:
  - Australia
  - Chile
  - Peru
  - Philippines
  - Saudi Arabia
  - Switzerland
  - South Africa
  - Taiwan

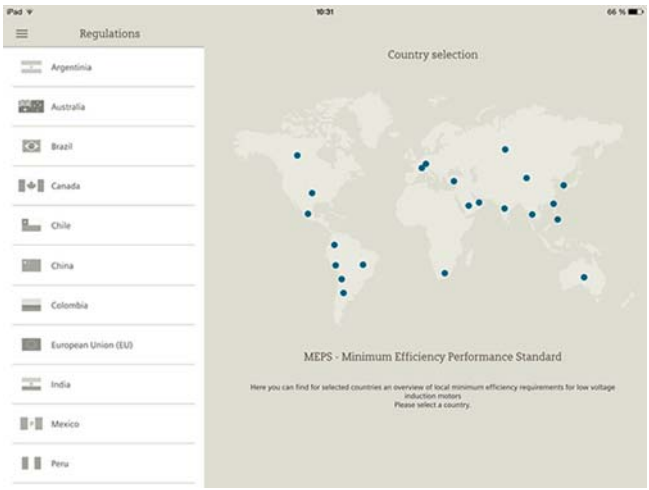

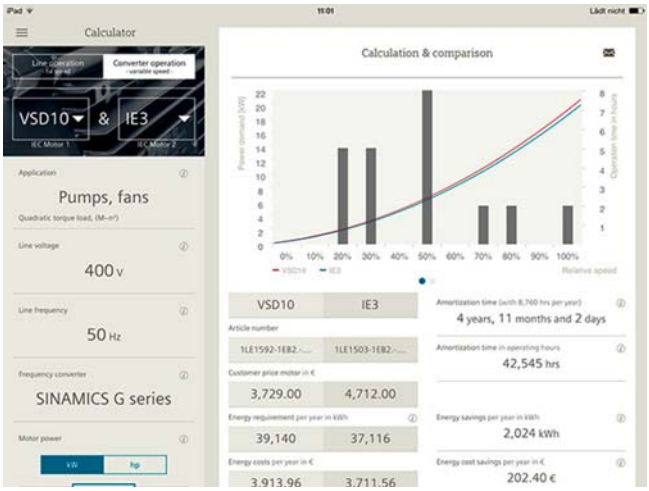

More information

Access to the SIMOTICS EE-COMPARATOR App:
www.siemens.com/simotics-ee-comparator

Download on the App Store

ANDROID APP ON Google play

7

© Siemens AG 2018

Overview

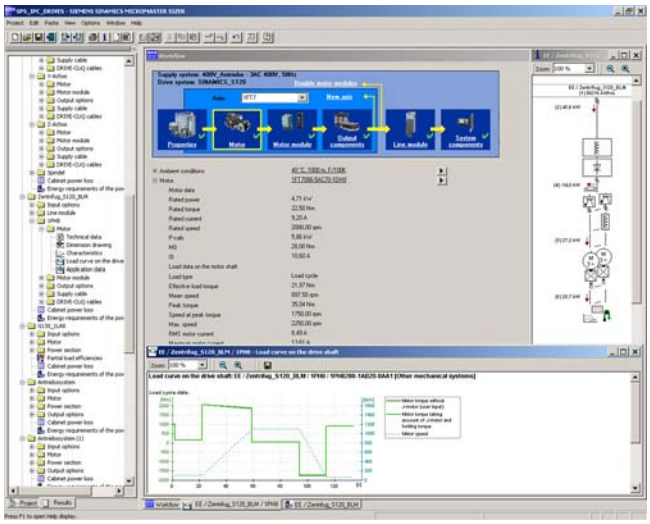

The following drives and controls can be engineered in a user-friendly way using the SIZER for Siemens Drives configuration tool:

- SIMOTICS low-voltage motors including servo geared motors
- SINAMICS low-voltage drive systems
- Motor starters
- SINUMERIK CNCs
- SIMOTION Motion Control System
- SIMATIC Technology

It provides support when selecting the technologies involved in the hardware and firmware components required for a drive task. SIZER for Siemens Drives covers the full range of operations required to configure a complete drive system, from basic single drives to complex multi-axis applications.

SIZER for Siemens Drives supports all of the engineering steps in a workflow:

- Configuring the power supply
- Designing the motor and gearbox, including calculation of mechanical transmission elements
- Configuring the drive components
- Compiling the required accessories
- Selecting the line-side and motor-side power options, e.g. cables, filters, and reactors

When SIZER for Siemens Drives was being designed, particular importance was placed on a high degree of usability and a universal, function-based approach to the drive application. The extensive user guidance makes using the tool easy. Status information keeps you continually informed about the progress of the configuration process.

The SIZER for Siemens Drives user interface is available in English, French, German and Italian.

The drive configuration is saved in a project. In the project, the components and functions used are displayed in a hierarchical tree structure.

The project view permits the engineering of drive systems and the copying/inserting/modifying of drives already configured.

The configuration process produces the following results:

- A parts list of the required components (export to Excel, use of the Excel data sheet for import to SAP)
- Technical specifications of the system
- Characteristic curves
- Comments on system reactions
- Mounting arrangement of drive and control components and dimensional drawings of motors
- Energy requirements of the configured application

These results are displayed in a results tree and can be reused for documentation purposes.

Support is provided by the technological online help menu:

- Detailed technical specifications
- Information about the drive systems and their components
- Decision-making criteria for the selection of components
- Online help in English, French, German, Italian, Chinese and Japanese

System requirements

- PG or PC with Pentium III min. 800 MHz (recommended > 1 GHz)
- 512 MB RAM (1 GB RAM recommended)
- At least 4.1 GB of free hard disk space
- An additional 100 MB of free hard disk space on the Windows system drive
- Screen resolution 1024 × 768 pixels (1280 × 1024 pixels recommended)
- Operating system:
  - Windows 7 Professional (32/64 bit)
  - Windows 7 Enterprise (32/64 bit)
  - Windows 7 Ultimate (32/64 bit)
  - Windows 7 Home (32/64 bit)
  - Windows 8.1 Professional (32/64 bit)
  - Windows 8.1 Enterprise (32/64 bit)
- Microsoft Internet Explorer V5.5 SP2

Selection and ordering data

Description	Article No.
SIZER for Siemens Drives engineering tool on DVD-ROM English, French, German, Italian	**6SL3070-0AA00-0AG0**

More information

The SIZER for Siemens Drives engineering tool is available free on the Internet at:
www.siemens.com/sizer

© Siemens AG 2018

SIPLUS CMS condition monitoring systems for the continuous condition monitoring of motors

Overview

The SIPLUS CMS condition monitoring systems continuously monitor the condition of wear-prone drive components, such as motors. Depending on the system, individual motors can be monitored as well as complete drive trains, or even the entire plant. IEPE sensors are used for acquisition of the motor vibrations for analysis, visualization and archiving by SIPLUS CMS. Information is supplied regularly and event-driven – even in remote operation. SIPLUS CMS can also be retrofitted.

More information on SIPLUS CMS is available on the Internet at:
www.siemens.com/siplus-cms

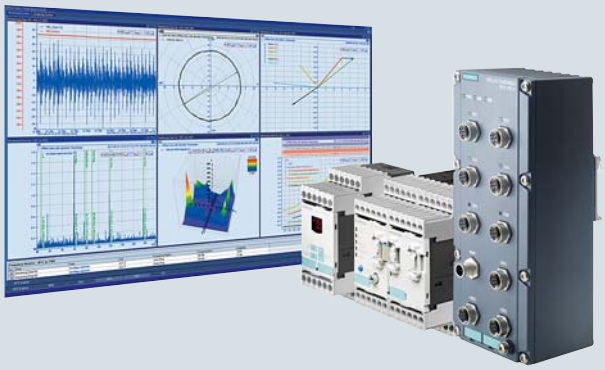

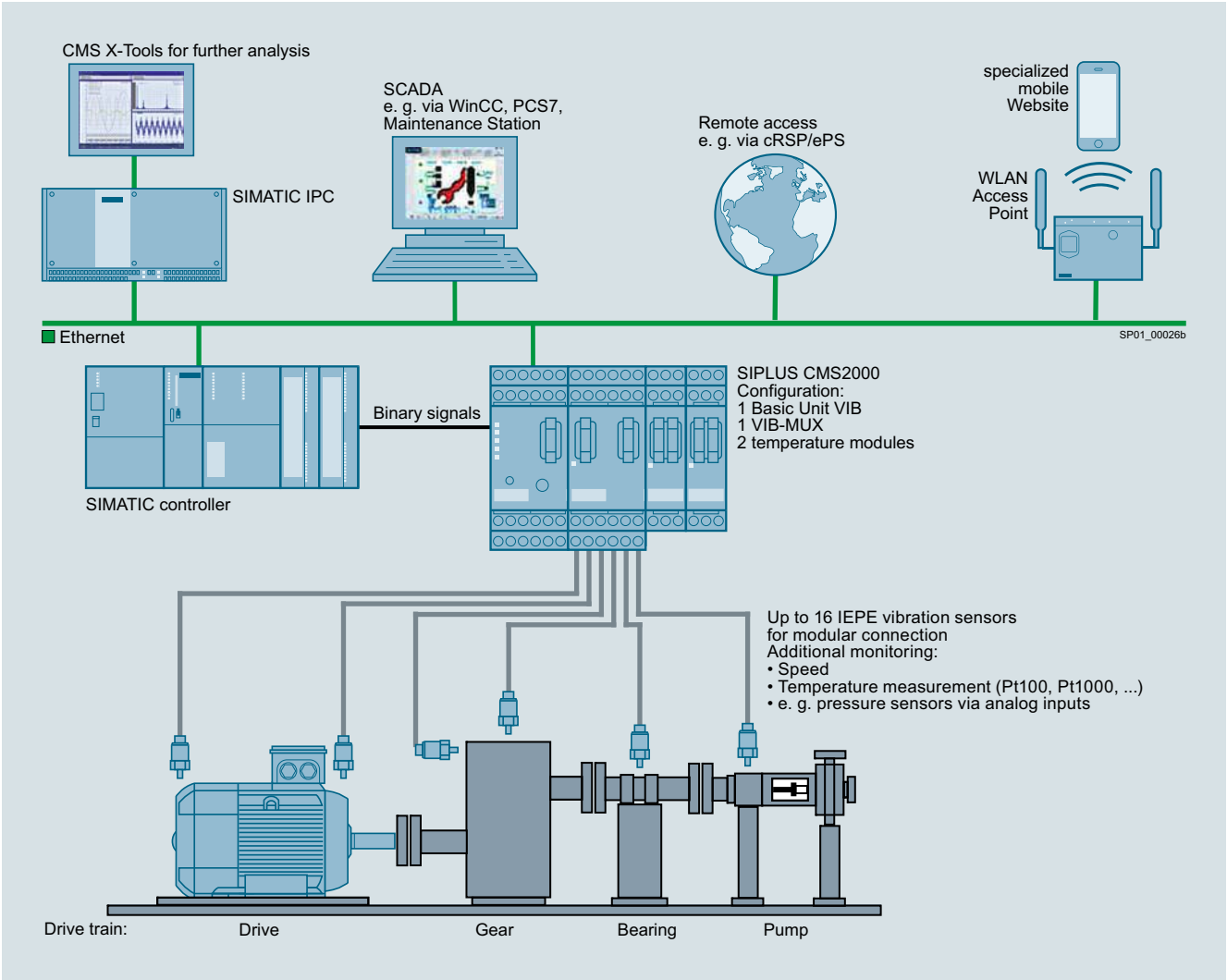

© Siemens AG 2018

Numerical
1XP8 012 rotary pulse encoder ... 1/98
2LM8 spring-operated disk brake ... 1/82

A
Absolute/relative conversion of air humidity ... 1/34
Acceptance test certificate ... 6/44
Accessories ... 2/117, 3/28, 4/50, 4/106, 5/47, 6/25
Additional rating plates ... 1/30
Admissible axial load ... 1/71
Admissible cantilever forces ... 1/66
Admissible loading on the shaft extension in the event of fire ... 6/7
Admissible loading on the shaft extension ... 6/6
Ambient temperature ... 1/35
Anti-condensation heating ... 1/36
Appendix ... 7/1
Approval for Mexico ... 1/26
Article No. supplements and special versions ... 2/85, 3/16, 4/30, 4/86, 5/28, 6/15
Article number code ... 2/7, 3/7, 4/25, 4/68, 5/15, 6/8
Article number index ... 7/22
Auxiliary terminal boxes ... /48

B
Backstop, protective cover ... 1/105
Balance ... 1/56
Basic Line ... 2/4, 5/5
Bearing insulation ... 1/58
Bearing lifetime ... 1/58
Bearing plates ... 6/5
Bearing selection table ... 1/61
Bearing system ... 1/58
Bearing ... 1/58, 4/8, 4/63, 6/6
Bearings and lubrication ... 1/58
Brakes ... 1/81
Brief overview of the general technical specifications ... 4/3

C
Cable entry ... 1/42
Cantilever forces, admissible ... 1/66
Catalog orientation and drive selection ... 1/7
CCC – China Compulsory Certification ... 1/27
Certification ... 5/3
China Energy Label ... 1/27
Circuit ... 1/41
Classification of zones ... 5/2
Coaxiality and linear movement in accordance with DIN 42955 Tolerance R for Flange-mounting motors ... 1/55
Colors and paint finish ... 1/21
Colors ... 1/23
Concentricity of shaft extension and coaxiality according to DIN 42955 Tolerance R for flange-mounting motors ... 1/55
Concentricity of shaft extension ... 1/55
Conditions of delivery ... 7/34
Conditions of sale and delivery and delivery ... 7/34
Configuration of motors with brakes ... 1/92
Configurator ... 7/12
Connection ... 1/41
Converter operation specially for motors in type of protection "Ex ec" (Zone 2) and VIK-Ex ec version ... 5/8
Converter operation specially for motors in type of protection „Ex nA /Ex tc“ (Zone 2/22) ... 5/8
Converter operation specially for motors in type of protection "Ex tb" (Zone 21) and "Ex tc" (Zone 22) ... 5/8
Converter operation ... 1/32, 2/6, 5/7
Converter SINAMICS G120 Power Modules PM240-2 ... 4/67
Coolant temperature ... 1/35, 5/14
Couplings ... 2/117, 3/28, 4/106, 5/47, 6/25
CSA-safety and CSA-Energy Efficiency Verification ... 1/26
Currents ... 1/29

D
Degree of protection ... 6/44, 1/50
Designs in accordance with standards and specifications ... 1/25
Diagrams of bearings ... 1/65
Digital Data App ... 1/4
Digital Enterprise ... 2
Dimension sheet generator ... 2/121, 3/31, 4/53, 4/109, 5/49, 6/27
Dimensions and weights of the mountings ... 1/106
Dimensions ... 2/118, 3/30, 4/52, 4/108, 5/48, 6/26
- Overall dimensions ... 2/118, 3/30, 4/53, 4/108, 5/48, 6/26
- Notes on the dimensions ... 2/121, 3/31, 4/53, 4/109, 5/49, 6/27
- Dimension sheet generator ... 2/121, 3/31, 4/53, 4/109, 5/49, 6/27
- SIMOTICS GP 1LE1 – Aluminum series ... 2/122 … 2/138
  - self-ventilated – IE1, IE2, NEMA Energy Efficient and pole-changing ... 2/122
  - self-ventilated with increased power – IE1, IE2 ... 2/124
  - forced-air/naturally cooled – IE1, IE2 ... 2/126
  - self-ventilated – IE3, NEMA Premium Efficient ... 2/128
  - self-ventilated with increased power – IE3 ... 2/132
  - forced-air cooled – IE3 ... 2/134
  - self-ventilated – IE4 ... 2/138
- SIMOTICS SD 1LE1 – cast-iron series ... 2/140 … 2/150
  - self-ventilated – IE1, IE2, NEMA Energy Efficient ... 2/140
  - self-ventilated – IE3, NEMA Premium Efficient ... 2/148
  - self-ventilated – IE4 ... 2/150
- SIMOTICS SD 1LE5 – cast-iron series self-ventilated – IE3, IE4 ... 3/32
- SIMOTICS SD Add 1LE5 – cast-iron series self-ventilated – IE3, IE4 ... 3/34
- 1FP10.4 aluminum series self-ventilated – Super Premium Efficiency ... 4/54
- 1FP15.4 cast-iron series self-ventilated – Super Premium Efficiency ... 4/56
- 1LE1092 aluminum series self-ventilated – Standard Efficiency ... 4/110
- 1LE1592 cast-iron series self-ventilated – Standard Efficiency ... 4/112
- 1MB10 aluminum series self-ventilated ... 5/50 … 5/52
  - Self-ventilated – IE3 Premium Efficiency ... 5/50
  - Self-ventilated – High Efficiency IE2 ... 5/52
  - Self-ventilated – Standard Efficiency IE1 ... 5/52
- 1MB15 cast-iron series self-ventilated ... 5/54 … 5/58
  - Self-ventilated – Premium Efficiency IE3 ... 5/54
  - Self-ventilated – High Efficiency IE2 ... 5/58
- 1PC1300, 1PC1303 Aluminum series – IE2 und IE3 ... 6/28 … 6/30
  - Self-ventilated, frame sizes 80 M to 160 L ... 6/28
  - Forced-air cooled, frame sizes 80 M to 160 L ... 6/30
- Cast-iron series 1PC1301, 1PC1304 – IE2 and IE3 ... 6/32 … 6/38
  - Self-ventilated, frame sizes 180 M to 250 M ... 6/32
  - Self-ventilated, frame sizes 280 M to 315 L ... 6/34
  - Forced-air cooled, frame sizes 180 M to 250 M ... 6/36
  - Forced-air cooled, frame sizes 280 S to 315 L ... 6/38

Direction of rotation ... 1/31
Dispatch ... 1/24
Documentation ... 1/24
Download Center ... 7/10
Drainage holes ... 6/5
Drive selection ... 1/7
Drive Technology Configurator ... 7/12
Drive Technology Configurator selection tool ... 7/12
Duty type ... 6/4

E
Eagle Line ... 2/4
EE-COMPARATOR ... 7/14
Efficiency classes and efficiencies according to IEC 60034-30-1 ... 1/5
Efficiency ... 1/31
EISA ... 1/26
Electrical design ... 1/29
Essential Service for Propulsion ... 6/40
Essential Service ... 6/40
EU Directive 640/2009 ... 1/26
Ex certificate EAC for the Eurasian customs union ... 5/14
Explosion-Proof Motors SIMOTICS XP1MA/1MB1/1MD5/1LA/1LG/1PQ8/1PS5 – Overview ... 5/4
Explosion-proof rotary pulse encoders ... 5/10
Explosion-proof separately driven fan ... 5/11
Export regulations ... 7/33
Extension of liability for defects ... 1/24
Eyebolts ... 1/78

© Siemens AG 2018

Subject index

F
Fan cover ... 1/34, 6/42
FDX spring-operated brake ... 1/93
Flange dimensions ... 1/53
Foundation blocks ... 2/117, 3/28, 4/50, 4/106, 5/47, 6/25
Frequencies ... 1/29
Frequency ... 6/4

G
General information ... 1/20
General purpose motors ... 2/2
Grease lifetime ... 1/59, 4/23, 4/65
Grease ... 6/6
Greasing ... 1/58
Guide to selecting and ordering the motors ... 1/7

H
Heating ... 1/36
High efficiency energy-saving motors ... 2/3
HOG 10 D 1024 I rotary pulse encoder ... 1/103
HOG 9 DN 1024 I rotary pulse encoder ... 1/100
Housing design ... 6/42

I
Impulse Voltage Insulation Class (IVIC) ... 1/32
Index of order codes ... 7/23
Indexes ... 7/18
Industry Services – Portfolio ... 7/6
Industry Services ... 7/5
Information and Download Center ... 7/10
Information and Ordering in the Internet and on DVD ... 7/9
Information regarding efficiency in accordance with International Efficiency ... 1/5
Information regarding efficiency ... 1/5
Innovative drive technology for all industries, applications and power classes ... 1/2
Installation altitude ... 1/35
Insulated bearings ... 5/7
Insulation system ... 6/5
Insulation ... 1/33
Insulation ... 4/7, 4/62
Integrated Drive Systems ... 4
International use ... 4/23, 4/65
Introduction – SIMOTICS GP/SD VSD motors optimized for converter operation ... 4/2
Introduction – SIMOTICS DP application-specific motors ... 6/2
Introduction ... 1/1

K
Keyway ... 1/54
KFB spring-operated brake ... 1/86
Korea certification ... 1/26
Korea Energy Label ... 1/27
Korean Standard KS C 60034-2-1 ... 1/26

L
Liability for defects ... 1/24
Lifting eyes ... 1/78
LL 861 900 220 rotary pulse encoder ... 1/99
Load characteristics ... 4/24, 4/66

M
Main terminal box ... 1/48
Marine motors ... 6/40
Maximum operating speed ... 4/23, 4/65
Measures for gear mounting ... 1/55
Mechanical limit speeds of the explosion-proof motors SIMOTICS XP 1MB15, 1MB16 Ex ec, Ex tb and Ex tc ... 5/9
Mechanical limit speeds ... 1/60
Mechanical stress ... 1/59, 4/23, 4/65
Mechanical version ... 1/51

M (continued)
Metal surcharges ... 7/30
Minimum cooling air flow ... 1/37, 6/6
Mode of operation of FDX spring-operated brake (Holding brake/operating brake) ... 1/93
Modular technology ... 1/80 … 1/98
- Separately driven fan ... 1/80
- Brakes ... 1/81
- 2LM8 spring-operated disk brake ... 1/82
- KFB spring-operated brake ... 1/86
- SFB-SH solenoid double-disk spring-operated brake ... 1/89
- Configuration of motors with brakes ... 1/92
- FDX spring-operated brake ... 1/93
- 1XP8 012 rotary pulse encoder ... 1/98

Motor connection ... 4/23, 4/65
Motor connection ... 6/42
Motor protection ... 1/38, 2/98, 3/19, 4/37, 4/93, 5/34, 6/19
Motors according to NEMA standard ... 7/2
Motors for general purpose applications ... 2/3
Motors for severe duty applications ... 2/4
Motors specially designed for converter operation ... 4/7, 4/62
Motors with type of protection Ex tb, Ex tc, Ex ec for use in Zones 21, 22, 2 ... 5/16 … 5/26
- Motors with IE3 Premium Efficiency ... 5/16, 6/17
  - Aluminum series 1MB10 self-ventilated ... 5/16
  - Cast-iron series 1MB15, 1MB16 self-ventilated ... 5/17
- Motors with IE2 High Efficiency ... 5/20 … 5/22
  - Aluminum series 1MB10 self-ventilated ... 5/20
  - Cast-iron series 1MB15, 1MB16 self-ventilated ... 5/22
- Motors with IE1 Standard Efficiency ... 5/26
  - Aluminum series 1MB10 self-ventilated ... 5/26

Motors without external fan and without fan cover ... 2/3
Mounting technology ... 1/79
Mountings -preparation ... 1/79

N
NEMA motors ... 7/2
Noise levels for line operation ... 1/57
Noise ... 4/7, 4/62
Non-essential service ... 6/40
Notes on dimensions ... 2/121, 3/31, 4/53, 4/109, 5/49, 6/27
NTC thermistor ... 1/39
Number of poles ... 6/4

O
Online Services ... 7/9
Online Support ... 7/8
Operating data for 50 Hz/60 Hz/87 Hz characteristics ... 4/23, 4/65
- Options ... 2/102, 3/21, 4/41, 4/97, 5/38, 6/21, 6/46
  - Aluminum series 1LE10 ... 2/102
  - Cast-iron series 1LE15 Basic Line, 1LE16 Performance Line ... 2/109
  - Cast-iron series 1LE55 Basic Line, 1LE56 Performance Line ... 3/21
  - Aluminum series 1FP10.4 ... 4/41
  - Cast-iron series 1FP15.4 ... 4/45
  - Aluminum series 1LE1092 ... 4/97
  - Cast-iron series 1LE1592 ... 4/101
  - Aluminum series 1MB10 ... 5/38
  - Cast-iron series 1MB15 Basic Line, 1MB16 Performance Line ... 5/42
  - Aluminum series 1PC1300, 1PC1303 ... 6/21
  - Cast-iron series 1PC1301, 1PC1304 ... 6/23
  - Aluminum series 1LE10 ... 6/46
  - Cast-iron series 1LE15 Basic Line, 1LE16 Performance Line ... 6/47
  - Cast-iron series 1LE55 Basic Line, 1LE56 Performance Line ... 6/48
  - Aluminum series 1MB10, cast-iron series 1MB15/1MB16 ... 6/49

Order handling for 1MB1 motors for converter operation ... 5/7
Order information ... 6/45
Ordering example ... 6/45
Orientation ... 2/2, 3/2, 4/4, 4/60, 5/2, 6/3, 6/40
Overall dimensions ... 2/118, 3/30, 4/53, 4/108, 5/48, 6/26
Overload torque ... 4/9, 4/64
Overview explosion-proof motors SIMOTICS XP1MA/1MB1/1MD5/1LA/1LG/1PQ8/1PS5 ... 5/4

© Siemens AG 2018

P

Packaging ... 1/24
Packing weights ... 1/24
Paint finish ... 1/21
Partner at Siemens ... 7/9
Performance Line ... 2/4, 5/5
Permanent lubrication ... 1/58
POG 10 rotary pulse encoder ... 1/102
POG 9 rotary pulse encoder ... 1/101
Power characteristics for converter configuration ... 4/10
Power factor ... 1/31
Powers ... 1/29
Preferred motors ... 2/3
Preparation for mountings ... 1/79
Protective devices ... 1/38
PTC thermistors ... 1/38, 5/7

R

RAL colors ... 1/23
Rated power ... 6/4
Rated speed ... 1/31
Rated torque ... 1/31
Rated voltage ... 4/7, 4/62
Rating plate and additional rating plates ... 1/30
Rating plate ... 4/7, 4/62, 5/7, 6/44
Recommended special versions ... 6/45
Reduction factor ... 1/35, 6/4
Regreasing ... 1/59
Regulations ... 1/25, 6/4
Reluctance motors for SINAMICS Converter – SIMOTICS GP/SD VSD4000 line ... 4/4
Repair parts ... 2/117, 3/29, 4/51, 4/107, 5/47, 6/25
Resistance thermometer Pt100/Pt1000 ... 1/40
Rotor ... 1/54

S

Safety notes ... 1/24
Schematic representation of a low-voltage motor ... 1/20
Selecting and ordering the motors ... 1/7
Selection of the frequency converters ... 5/7
Sendix 5020 rotary pulse encoder ... 1/104
Separately driven fans ... 1/36, 1/80, 4/8, 4/63
Services ... 7/5
Severe Duty motors ... 2/4
Shaft extension ... 1/54
Shaft ... 1/54
SIMOTICS Digital Data App ... 1/4
SIMOTICS DP – Smoke extraction motors ... 6/9 … 6/13
- Motors with IE3 Premium Efficiency ... 6/9, 6/10
  - Aluminum series 1PC1303 self-ventilated or forced-air cooled ... 6/9
  - Cast-iron series 1PC1304 self-ventilated or forced-air cooled ... 6/10
- Motors with IE2 High Efficiency ... 6/11 … 3/13
  - Aluminum series 1PC1300 self-ventilated or forced-air cooled 6/11
  - Cast-iron series 1PC1301 self-ventilated or forced-air cooled ... 6/13

SIMOTICS DP Application-Specific Motors – Introduction ... 6/2
SIMOTICS DP Application-Specific Motors ... 6/1
SIMOTICS EE-COMPARATOR ... 7/14
SIMOTICS GP motors with aluminum with aluminum housing ... 2/3

S (continued)

SIMOTICS GP/SD 1LE1 motors – APAC Line ... 2/54 … 2/70
- Motors with IE3 Premium Efficiency ... 2/54 ... 2/63
  - Aluminum series 1LE1043 self-ventilated or forced-air cooled ... 2/54
  - Aluminum series 1LE1043 self-ventilated or forced-air cooled with increased power ... 2/56
  - Cast-iron series 1LE1543/1LE1643 self-ventilated or forced-air cooled ... 2/57
  - Cast-iron series 1LE1543/1LE1643 self-ventilated with increased power ... 2/63
- Motors with IE2 High Efficiency ... 2/65 … 2/70
  - Aluminum series 1LE1041 self-ventilated or forced-air cooled ... 2/65
  - Aluminum series 1LE1041 self-ventilated or forced-air cooled with increased power ... 2/67
  - Cast-iron series 1LE1541 self-ventilated or forced-air cooled ... 2/68
  - Cast-iron series 1LE1541 self-ventilated or forced-air cooled with increased power ... 2/70
- NEMA Premium Efficient motors ... 2/80, 2/81
  - Aluminum series 1LE1021 self-ventilated or forced-air cooled ... 2/80
  - Cast-iron series 1LE1521 self-ventilated or forced-air cooled ... 2/81

SIMOTICS GP/SD 1LE1 motors – Eagle Line ... 2/71 … 2/81
- NEMA Premium Efficient motors ... 2/71 … 2/73
  - Aluminum series 1LE1023 self-ventilated or forced-air cooled ... 2/71
- NEMA Premium Efficient motors ... 2/73
  - Cast-iron series 1LE1523/1LE1623 self-ventilated or forced-air cooled ... 2/73

SIMOTICS GP/SD 1LE1 motors – pole-changing ... 2/82, 6/83
- Aluminum series 1LE1011 self-ventilated motors for constant load torque ... 2/82
- Aluminum series 1LE1011/1LE1012 self-ventilated motors for square-law load torque ... 2/83

SIMOTICS GP/SD 1LE1 motors for converter operation ... 4/70 … 4/76
- Motors with Standard Efficiency, enclosed motors ... 4/70 ... 4/76
  - Aluminum series 1LE1092 self-ventilated ... 4/70
  - Cast-iron series 1LE1592 self-ventilated ... 4/76

SIMOTICS GP/SD 1LE1 motors ... 2/8 … 2/52
- Motors with IE4 Super Premium Efficiency ... 2/8, 2/9
  - Aluminum series 1LE1004 self-ventilated or forced-air cooled ... 2/8
  - Cast-iron series 1LE1504/1LE1604 self-ventilated or forced-air cooled ... 2/9
- Motors with IE3 Premium Efficiency ... 2/13 ... 2/24
  - Aluminum series 1LE1003 self-ventilated ... 2/13
  - Aluminum series 1LE1003 self-ventilated with increased power ... 2/16
  - Cast-iron series 1LE1503/1LE1603 self-ventilated or forced-air cooled ... 2/17
  - Cast-iron series 1LE1503/1LE1603 self-ventilated with increased power ... 2/24
- Motors with IE2 High Efficiency ... 2/26 … 2/40
  - Aluminum series 1LE1001 self-ventilated or forced-air cooled ... 2/26
  - Aluminum series 1LE1001 self-ventilated with increased power ... 2/30
  - Cast-iron series 1LE1501/1LE1601 self-ventilated or forced-air cooled ... 2/32
  - Cast-iron series 1LE1501/1LE1601 self-ventilated with increased power ... 2/40
- Motors with IE1 Standard Efficiency ... 2/44 … 2/52
  - Aluminum series 1LE1002 self-ventilated or forced-air cooled ... 2/44
  - Aluminum series 1LE1002 self-ventilated with increased power ... 2/47
  - Cast-iron series 1LE1502 self-ventilated or forced-air cooled ... 2/48
  - Cast-iron series 1LE1502 self-ventilated or forced-air cooled with increased power ... 2/52

SIMOTICS GP/SD motors VSD4000 line – reluctance motors for SINAMICS Converter
- Motors with Super Premium Efficiency enclosed version ... 4/26 ... 4/28
  - 1FP10.4 aluminum series self-ventilated ... 4/26
  - 1FP15.4 cast-iron series self-ventilated ... 4/28

SIMOTICS GP/SD standard motors 1LE ... 12/1
SIMOTICS GP/SD VSD10 line Standard Motors for converter operation ... 4/60

© Siemens AG 2018

Subject index

S (continued)
SIMOTICS GP/SD VSD4000 line – reluctance motors for SINAMICS Converter ... 4/4
SIMOTICS motors ... 1/2
SIMOTICS SD Add motors next generation ... 3/10 … 3/15
- Motors with IE4 Super Premium Efficiency ... 3/10 ... 3/11
  - Cast-iron series 1LE5534 self-ventilated or forced-air cooled ... 3/10
  - Cast-iron series 1LE5634 self-ventilated or forced-air cooled ... 3/11
- Motors with IE3 Premium Efficiency ... 3/14, 3/15
  - Cast-iron series 1LE5533 self-ventilated or forced-air cooled ... 3/14
  - Cast-iron series 1LE5633 self-ventilated or forced-air cooled ... 3/15

SIMOTICS SD motors next generation ... 3/1 … 3/35
- Motors with IE4 Super Premium Efficiency ... 3/8, 3/9
  - Cast-iron series 1LE5504 self-ventilated or forced-air cooled ... 3/8
  - Cast-iron series 1LE5604 self-ventilated or forced-air cooled ... 3/9
- Motors with IE3 Premium Efficiency ... 3/12, 3/13
  - Cast-iron series 1LE5503 self-ventilated or forced-air cooled ... 3/12
  - Cast-iron series 1LE5603 self-ventilated or forced-air cooled ... 3/13

SIMOTICS SD motors with cast-iron housing ... 2/4
SIMOTICS SD Standard Motors next generation ... 3/1
SIMOTICS VSD motors for converter operation ... 4/1
SIMOTICS XP 1MB1 explosion-proof motors ... 5/1
SIMOTICS XP motors with cast-iron housing ... 5/5
SinaSave – Energy efficiency tool ... 7/13
SIPLUS CMS – condition monitoring systems for the continuous condition monitoring of motors ... 7/16
SIZER for Siemens Drives – Engineering tool ... 7/15
SIZER WEB ENGINEERING – Engineering Tool ... 7/11
Slide rails ... 2/117, 3/28, 4/50, 4/106, 5/47, 6/25
Smoke-extraction motors ... 6/3
Spare motors ... 2/117, 3/29, 4/51, 4/107, 5/47, 6/25
Special RAL colors ... 1/23
Special technology ... 1/99 … 1/105, 5/9
- Backstop, protective cover ... 1/105
- HOG 9 DN 1024 I rotary pulse encoder ... 1/100
- HOG 10 D 1024 I rotary pulse encoder ... 1/103
- LL 861 900 220 rotary pulse encoder ... 1/99
- POG 9 rotary pulse encoder ... 1/101
- POG 10 rotary pulse encoder ... 1/102
- Sendix 5020 rotary pulse encoder ... 1/104

Special types of construction ... 1/51
Special versions ... 1/12, 2/102, 3/21, 4/41, 4/97, 5/38, 6/21, 6/46
Specifications of the individual classification societies ... 6/43
Standard Motors for Converter Operation – SIMOTICS GP/SD VSD10 line ... 4/60
Standard RAL colors ... 1/23
Standard shaft ... 1/54
Standard types of construction ... 1/51
Standards ... 1/25, 6/3
Steps for drive selection in the catalog ... 1/8
Steps for drive selection ... 1/7
Support – Online ... 7/8
System power loss ... 4/24

T
T-Drain – adjustable drainage of condensed water ... 1/77
Taper pins ... 2/117, 3/28, 4/50, 4/106, 5/47, 6/25
Technical specifications ... 4/3, 4/6, 4/61, 5/6, 6/4, 6/42
Temperature class ... 6/44
Temperature detector ... 1/38
Temperature sensor KTY 84-130 ... 1/39
Temperature/time classes F200 and F300 ... 6/3
Temperature/time classification ... 6/3
Terminal box position ... 2/100, 3/20, 4/39, 4/95, 5/36, 6/20
Terminal box ... 1/41
Terminal connection ... 1/47
Test certificates ... 1/24
Testing and test certificates ... 6/3
Thermal limit characteristic ... 4/9
Tolerances for electrical data ... 1/25
Tools and engineering ... 7/11
Torque limits ... 4/9, 4/64
TR CU product safety certificate EAC for Eurasian customs union ... 1/28
Train-compatible version ... 1/28
Transport ... 1/78
Type Approval ... 6/41
Type of protection Ex ec for use in Zone 2/22 ... 5/6
Type of protection Ex ec for use in Zone 2 ... 5/6
Type of protection Ex tb IIIC and Ex tc IIIB for use in Zones 21 and 22 ... 5/6
Type test certificates ... 6/43
Type test ... 6/41
Types of construction ... 1/51, 2/90, 3/17, 4/32, 4/88, 5/30, 6/16
Types of protection ... 5/3

U
UL-safety ... 1/26

V
Ventilation ... 1/36, 6/42
Versions of the SIMOTICS GP/SD VSD10 line motor series 1LE109, 1LE159 ... 4/60
Vibration severity ... 1/56
VIK version ... 1/28, 5/14
Voltage ... 6/4
Voltages ... 1/29, 2/85, 3/16, 4/30, 4/86, 5/28, 6/15

W
Winding protection ... 6/44
Winding ... 1/33

Z
Zone 1 with type of protection Ex de IIC explosion-proof enclosure "d" ... 5/6
Zone 1 with type of protection Ex eb II increased safety "e" ... 5/6

© Siemens AG 2018

Order codes for 1LE, 1MB1, 1PC motors

All options are listed alphanumerically according to order codes in the following table.

A list of all the options available arranged according to category can be found in Catalog Section 1 "Introduction", "Guide to selecting and ordering the motors".

Order code		Special versions	Category	For further information, see page
B01		Printed German/English Operating Instructions (compact) enclosed in each wire-lattice pallet	Packaging, safety notes, documentation and test certificates	2/107, 4/44, 4/100
B02		Acceptance test certificate 3.1 in accordance with EN 10204		2/107, 2/115, 3/26, 4/44, 4/48, 4/100, 4/104, 5/41, 5/45, 6/22, 6/24
B04		Printed German/English Operating Instructions enclosed		2/107, 2/115, 3/26, 4/44, 4/48, 4/100, 4/104, 5/41, 5/45, 6/22, 6/24
B07		Additional rating plate for voltage tolerance	Rating plate and additional rating plates	2/106, 2/115, 3/26, 6/22, 6/24
B10		Individual acceptance by marine classification society	Marine version – Acceptance/certification	6/46 … 6/49
B13	*New!*	Without "Made in manufacturing country" marking	Packaging, safety notes, documentation and test certificates	3/26
B30		Version (IP55) for Zones 2 or 22, for non-conductive dust	Explosion-proof version	5/38, 5/42
B31		Design for Zone 2 in Ex nA IIB T3 Gc		5/38, 5/42
B40		Version for converter operation in basic version with operating data SINAMICS G120 with PM240-2.	Version for converter operation	5/38, 5/42
B41		Version for converter operation in basic version with operating data SINAMICS S150.		5/38, 5/42
B51	*New!*	Equivalent circuit diagram	Packaging, safety notes, documentation and test certificates	3/26
B52	*New!*	Starting diagram (torque vs. speed and current vs. speed)		3/26
B60		Document - Electrical datasheet		2/107, 2/115, 3/26, 4/44, 4/48, 4/100, 4/104
B61		Document - Order dimensional drawing		2/107, 2/115, 3/26, 4/44, 4/48, 4/100, 4/104
B65		Standard test (routine test) with acceptance		2/115, 3/26, 4/48, 4/104, 6/22, 6/24
B67	*New!*	Temperature test without acceptance		3/26
B68	*New!*	Temperature test with acceptance		3/26
B80	*New!*	Type test with heat run for vertical motors, without acceptance		3/27
B81	*New!*	Type test with heat run for vertical motors, with acceptance		3/27
			Marine version – Acceptance/certification	6/48
B82		Type test with heat run for horizontal motors, without acceptance	Packaging, safety notes, documentation and test certificates	2/115, 3/27
B83		Type test with heat run for horizontal motors, with acceptance		2/107, 2/115, 3/27, 4/44, 4/48, 4/100, 4/104, 5/41, 5/45, 6/22, 6/24
			Marine version – Acceptance/certification	6/46 … 6/49
B90	*New!*	"Basic" documentation package	Packaging, safety notes, documentation and test certificates	2/107, 2/115, 3/27, 4/44, 4/48, 4/100, 4/104, 5/41, 5/45, 6/22, 6/24
B91	*New!*	"Advanced" documentation package		2/107, 2/115, 3/27, 4/44, 4/48, 4/100, 4/104, 5/41, 5/45, 6/22, 6/24
B92	*New!*	"Projects" documentation package		2/107, 2/115, 3/27, 4/44, 4/48, 4/100, 4/104, 5/41, 5/45, 6/22, 6/24
B99		Wire-lattice pallet packaging		2/107, 4/44, 4/100, 5/41, 5/45
C02		VIK version	Version in accordance with standards and specifications	2/105, 2/113
			Explosion-proof version	5/38, 5/42
D01		CCC China Compulsory Certification	Version in accordance with standards and specifications	2/105, 2/113, 6/21
D02		Coolant temperature –50 to +40 °C	Coolant temperature and installation altitude	2/113, 3/25, 4/47, 4/103
D03		Coolant temperature -40 to +40 °C		2/105, 2/113, 3/25, 4/42, 4/47, 4/98, 4/103, 5/39, 5/44
D04		Coolant temperature –30 to +40 °C		2/105, 2/113, 3/25, 4/42, 4/47, 4/98, 4/103, 6/21, 6/23

© Siemens AG 2018

Index of order codes

Order code	Special versions	Category	For further information, see page
D22	Motor without CE marking for export outside EEA (see EU Directive 640/2009)	Version in accordance with standards and specifications	2/105, 2/113, 3/25
D23	Motor exclusively for use in transportation equipment for passengers and freight transport corresponding to EVPG §1 dated February 27, 2008		3/25
D30	Electrical according to NEMA MG1-12		2/105, 2/113, 3/25
D31	Design according to UL with "Recognition Mark"		2/105, 2/113, 3/25
D32 *New!*	Ex certification for China		5/44
D33	KEMCO Korea Energy Efficiency Label		2/105, 2/113
D34	China Energy Efficiency Label		2/105, 2/113, 5/44
D35	Ex certificate EAC for the Eurasian customs union		5/39, 5/44
D37	IEC Ex certification		5/39, 5/44
D39	Version according to UL and CSA (Canadian regulation)		4/43, 4/47, 4/99, 4/103
D40	Canadian regulations (CSA)		2/105, 2/113, 3/25
D47	TR CU product safety certificate EAC for Eurasian customs union		2/105, 2/113, 3/25, 4/99, 4/103
E21	With type test certificate according to Lloyds Register (LR), CT 45 °C, temperature class 155 (F), utilized according to 155 (F)	Marine version – Basic version	6/46 … 6/49
E31	With type test certificate according to Bureau Veritas (BV), CT 45 °C, temperature class 155 (F), utilized according to 155 (F)		6/46, 6/47, 6/49
E41	With type test certificate according to Registro Italiano Navale (RINA), CT 45 °C, temperature class 155 (F), utilized according to 155 (F)		6/46 … 6/49
E46	With type test certificate according to Russian Maritime Register (RS), CT 45 °C, temperature class 155 (F), utilized according to 155 (F)		6/46 … 6/49
E51	With type test certificate according to DNV GL Maritime, CT 45 °C, temperature class 155 (F), utilized according to 155 (F)		6/46 … 6/49
E52	With type test certificate according to American Bureau of Shipping (ABS), CT 50 °C, temperature class 155 (F), utilized according to 155 (F)		6/46 … 6/49
E54	With type test certificate according to Korean Register of Shipping (KR), CT 45 °C, temperature class 155 (F), utilized according to 155 (F)		6/46, 6/47, 6/49
F01	Mounting of holding brake (standard assignment)	Modular technology – Basic versions	2/104, 2/112, 3/23, 4/42, 4/46, 4/98, 4/102
F02	Mounting of brake for higher switching frequency (operating brake)		2/104, 4/42, 4/98
F04	Mounting of PRECIMA brake		2/112
F10	Brake supply voltage 24 V DC	Modular technology – Additional versions	2/104, 2/112, 3/23, 4/42, 4/46, 4/98, 4/102
F11	Brake supply voltage 230 V AC, 50/60 Hz		2/104, 2/112, 3/23, 4/42, 4/46, 4/98, 4/102
F12	Brake supply voltage 400 V AC, 50/60 Hz		2/104, 2/112, 3/23, 4/42, 4/46, 4/98, 4/102
F40	Backstop, counterclockwise motion blocked, clockwise direction of rotation		2/112, 3/23, 4/46
F41	Backstop, clockwise motion blocked, counterclockwise direction of rotation		2/112, 3/23, 4/46
F50	Mechanical manual brake release with lever (no locking)		2/104, 2/112, 4/42, 4/46, 4/98, 4/102
F70	Mounted separately driven fan	Modular technology – Basic versions	2/104, 2/112, 3/23, 4/42, 4/46, 4/98, 4/102, 5/39, 5/43
F74	Sheet metal fan cover	Heating and ventilation	2/106, 2/115, 3/26, 4/43, 4/48, 4/99, 4/104
F75	Fan cover for textile industry		2/106, 4/43, 4/99
F76	Metal external fan		2/106, 2/115, 4/43, 4/48, 4/99, 4/104, 5/40, 5/45
F77	Low-noise version for 2-pole motors with clockwise direction of rotation	Mechanical design and degrees of protection	2/104, 2/113, 3/24, 5/39, 5/44
F78	Low-noise version for 2-pole motors with counterclockwise direction of rotation		2/104, 2/113, 3/24, 5/39, 5/44
F90	Without external fan and without fan cover	Heating and ventilation	2/106, 2/115, 3/26, 4/43, 4/99, 6/22, 6/24
G01	Mounting of 1XP8012-10 (HTL) rotary pulse encoder	Modular technology – Basic versions	2/104, 2/112, 3/23, 4/42, 4/46, 4/98, 4/102
G02	Mounting of 1XP8012-20 (TTL) rotary pulse encoder		2/104, 2/112, 3/23, 4/42, 4/46, 4/98, 4/102
G04	Mounting of LL 861 900 220 rotary pulse encoder	Special technology	2/104, 2/112, 3/24, 4/42, 4/46, 4/98, 4/102
G05	Mounting of HOG 9 DN 1024 I rotary pulse encoder		2/104, 2/112, 3/24, 4/42, 4/46, 4/98, 4/102
G06	Mounting of HOG 10 D 1024 I rotary pulse encoder		2/104, 2/112, 3/24, 4/42, 4/46, 4/98, 4/102
G07	Mounting of POG 10D rotary pulse encoder (only in combination with separately driven fan or brake)		2/112, 3/24, 4/46, 4/102
G08	Mounting of POG9 rotary pulse encoder (only in combination with separately driven fan or brake)		2/112, 3/24, 4/46, 4/102

© Siemens AG 2018

Order code	Special versions	Category	For further information, see page
G11	Mounting of Kübler Sendix 5020 HTL, 1024 I rotary pulse encoder	Modular technology – Basic versions	2/104, 2/112, 3/23
G12	Mounting of Kübler Sendix 5020 TTL, 1024 I rotary pulse encoder		2/104, 2/112, 3/23
G15	Mounting of HOG 10 DN 1024 I rotary pulse encoder, terminal box moisture protection	Special technology	2/112, 3/24
G16	Mounting of HOG 10 DN 1024 I rotary pulse encoder, terminal box dust protection		2/112, 3/24
G30	Mounting of explosion-proof rotary pulse encoder for use in Zones 2, 21, and 22		5/39, 5/43
G40	Prepared for mounted components, centering hole only	Mechanical design and degrees of protection	2/104, 2/113, 4/42, 4/47, 4/98, 4/103
G41	Prepared for mountings with D12 shaft		2/104, 2/113, 3/24, 4/42, 4/47, 4/98, 4/103
G42	Prepared for mountings with D16 shaft		2/104, 2/113, 3/24, 4/42, 4/47, 4/98, 4/103
G43	Mechanical protection for encoder		2/104, 2/113, 3/24, 4/42, 4/47, 4/98, 4/103, 5/39, 5/44
H00	Protective cover		2/105, 2/113, 3/24, 4/42, 4/47, 4/98, 4/103, 5/39, 5/44, 6/21
H01	Screwed-on (instead of cast) feet		2/105, 2/113, 4/42, 4/47, 4/98, 4/103, 6/21, 6/23
H02	Vibration-proof version; vibration resistance to Class 3M4 according to IEC 60721-3-3:1994		2/105, 2/113, 3/24, 4/42, 4/47, 4/98, 4/103, 5/39, 5/44
H03	Condensation drainage holes		2/105, 2/113, 3/24, 4/42, 4/98, 5/39, 5/44
H04	External grounding	Motor connection and terminal boxes	2/102, 2/109, 4/41, 4/45, 4/97, 4/101, 6/21,
H07	Rust-resistant screws (externally)	Mechanical design and degrees of protection	2/105, 2/113, 3/24, 4/42, 4/47, 4/98, 4/103, 5/39, 5/44, 6/21, 6/23
H08	Terminal box on NDE	Motor connection and terminal boxes	2/102, 2/109, 3/21, 4/41, 4/45, 4/97, 4/101, 6/21, 6/23
H10	Housing with screw mounting	Mechanical design and degrees of protection	2/105, 4/42, 4/47
H20	IP65 degree of protection		2/105, 2/113, 3/24, 4/42, 4/47, 4/98, 4/103, 5/39, 5/44, 6/21, 6/23
H21	Degree of protection IP54		2/113, 3/24, 4/47, 4/103
H22	IP56 degree of protection		2/105, 2/113, 3/24, 4/42, 4/47, 4/98, 4/103, 5/39, 5/44, 6/21, 6/23
H23	Drive-end seal for flange-mounting motors, oil-tight to 0.1 bar		2/105, 2/113, 3/24, 4/42, 4/47, 4/98, 4/103, 5/39, 5/44
H25 *New!*	Viton sealing ring		3/24
H70	Second external grounding	Motor connection and terminal boxes	2/109, 3/21, 4/45, 4/101
L00	Vibration severity grade B	Balance and vibration severity	2/106, 2/114, 3/25, 5/40, 5/44, 6/21, 6/23
L01	Balancing without feather key		2/106, 2/114, 3/25, 4/43, 4/47, 5/40, 5/44, 6/21, 6/23
L02	Full-key balancing		2/106, 2/114, 3/25, 4/43, 4/47, 4/99, 4/103, 5/40, 5/44, 6/21, 6/23
L04	Shaft extension with standard dimensions, without feather keyway	Shaft and rotor	2/106, 2/114, 3/25, 4/43, 4/47, 4/99, 4/103, 5/40, 5/45, 6/22, 6/23
L05	Standard, cylindrical shaft extension (second shaft extension) NDE acc. to EN 50347		2/106, 2/114, 3/25, 4/43, 4/47, 4/99, 4/103, 5/40, 5/45, 6/22, 6/23
L06	Standard shaft made of stainless steel (e.g. 1.4021)		2/106, 2/114, 3/25, 4/43, 4/47, 4/99, 4/103, 5/40, 5/45
L07	Concentricity of shaft extension in accordance with DIN 42955 Tolerance R		2/106, 2/114, 3/25, 4/43, 4/47, 4/99, 4/103, 5/40, 5/45, 6/22, 6/24
L08	Concentricity of shaft extension, coaxiality, and linear movement in accordance with DIN 42955 Tolerance R for flange-mounting motors		2/106, 2/114, 3/25, 4/43, 4/47, 4/99, 4/103, 5/40, 5/45, 6/22, 6/24

© Siemens AG 2018

Index of order codes

Order code	Special versions	Category	For further information, see page
L19	Regreasing device with M10 × 1 grease nipple according to DIN 71412-A	Bearings and lubrication	2/105, 2/114, 3/25, 5/44, 6/23
L20	Located bearing DE		2/105, 2/114, 3/25, 4/43, 4/47, 4/99, 4/103, 5/40, 5/44
L21	Located bearing NDE		2/105, 2/114, 4/43, 4/47, 4/99, 4/103, 5/40, 5/44
L22	Bearing design for increased cantilever forces		2/105, 2/114, 3/25, 4/43, 4/47, 4/99, 4/103, 5/40, 5/44, 6/21, 6/23
L23	Regreasing device		2/105, 2/114, 4/43, 4/47, 4/99, 4/103, 5/40, 5/44, 6/21, 6/23
L24 *New!*	Hot bearing grease		3/25
L25	Bearings reinforced at both ends for DE and NDE, bearing size 63		2/105, 2/114, 4/43, 4/47, 4/99, 4/103, 5/40, 5/44
L28	Reinforced bearings at both DE and NDE, DE bearing for increased cantilever forces		2/114, 4/47, 4/103
L30 *New!*	Drainage for used grease		3/25
L37 *New!*	Special version with higher speeds		3/25
L50	Bearing insulation DE		2/114, 3/25, 4/103, 6/21, 6/23
L51	Bearing insulation NDE		2/114, 3/25, 4/103, 5/44, 6/21, 6/23
L52	Grounding brush for converter operation	Mechanical design and degrees of protection	2/113, 3/24, 4/103
L90	Version suitable for railways IC 411, EN IEC 60349, without EN 45545, with external fan and fan cover in plastic	Version in accordance with standards and specifications	2/105
L91	Version suitable for railways IC 411, EN IEC 60349, with EN 45545, with external fan and fan cover in metal		2/105
L92	Version suitable for railways IC 418, EN IEC 60349, without EN 45545, without external fan and fan cover		2/105
M01	Connected in star for dispatch	Packaging, safety notes, documentation and test certificates	2/107, 2/115, 3/27, 4/44, 4/48, 4/100, 4/104, 5/41, 5/45
M02	Connected in delta for dispatch		2/107, 2/115, 3/27, 4/44, 4/48, 4/100, 4/104, 5/41, 5/45
M10	Second rating plate, loose	Rating plate and additional rating plates	2/106, 2/115, 3/26, 4/43, 4/48, 4/99, 4/104, 5/40, 5/45, 6/22, 6/24
M11	Rating plate, stainless steel		2/106, 2/115, 3/26, 4/43, 4/48, 4/99, 4/104, 5/40, 5/45
N01	Temperature class 155 (F), utilized according to 155 (F), with service factor	Windings and insulation	2/103, 2/110, 3/22
N02	Temperature class 155 (F), utilized acc. to 155 (F), with increased power		2/103, 2/110, 3/22
N03	Temperature class 155 (F), utilized acc. to 155 (F), with increased coolant temperature		2/103, 2/110, 3/22
N05	Temperature class 155 (F), utilized acc. to 130 (B), coolant temperature 45 °C, derating approx. 4 %		2/103, 2/110, 3/22, 5/38, 5/43
N06	Temperature class 155 (F), utilized acc. to 130 (B), coolant temperature 50 °C, derating approx. 8 %		2/103, 2/110, 3/22, 5/38, 5/43
N07	Temperature class 155 (F), utilized acc. to 130 (B), coolant temperature 55 °C, derating approx. 13 %		2/103, 2/110, 3/22, 5/38, 5/43
N08	Temperature class 155 (F), utilized acc. to 130 (B), coolant temperature 60 °C, derating approx. 18 %		2/103, 2/111, 3/22, 5/38, 5/43
N10	Temperature class 180 (H)		2/103, 2/111, 3/22
N11	Temperature class 180 (H) at rated power and max. CT 60 °C		2/103, 2/111, 3/22, 4/42, 4/46
N30	Increased air humidity/temperature with 30 to 60 g water per m^3 of air		2/103, 2/111, 3/22, 4/42, 4/46, 4/97, 4/102, 5/38, 5/43, 6/21, 6/23
N31	Increased air humidity/temperature with 60 to 100 g water per m^3 of air		2/103, 2/111, 3/22, 4/42, 4/46, 4/102, 5/39, 5/43
Q01	Measuring nipple for SPM shock pulse measurement for bearing inspection	Bearings and lubrication	2/105, 2/114, 3/25, 4/43, 4/47, 4/99, 4/103, 5/40, 5/44, 6/21, 6/23
Q02	Anti-condensation heating for 230 V (2 terminals)	Heating and ventilation	2/106, 2/115, 3/26, 4/43, 4/48, 4/99, 4/104, 5/40, 5/45
Q03	Anti-condensation heating for 115 V (2 terminals)		2/106, 2/115, 3/26, 4/43, 4/48, 4/99, 4/104, 5/40, 5/45
Q06 *New!*	Anti-condensation heating for 400 V (2 terminals)		3/26

© Siemens AG 2018

Order code	Special versions	Category	For further information, see page
Q11	1 or 3 PTC thermistors – for tripping (2 terminals)	Motor protection	2/102, 2/109, 3/21, 4/41, 4/45, 4/97, 4/101
Q12	2 or 6 PTC thermistors – for alarm and tripping (4 terminals)		2/102, 2/109, 3/21, 4/41, 4/45, 4/97, 4/101
Q23	1 KTY84-130 temperature sensor (2 terminals)		2/102, 2/109, 3/21, 4/41, 4/45, 4/97, 4/101
Q25	2 KTY84-130 temperature sensors (4 terminals)		2/102, 2/109, 3/21, 4/41, 4/45, 4/97, 4/101
Q31	3 bimetal sensors (NC contacts) for tripping (2 terminals)		2/102, 2/109, 3/21, 4/41, 4/45, 4/97, 4/101
Q32	6 bimetal sensors (NC contacts) for alarm and tripping (4 terminals)		2/102, 2/109, 3/21, 4/41, 4/45, 4/97, 4/101
Q33	3 bimetal sensors (NC contacts) for tripping (6 terminals)		2/102, 2/109, 3/21, 4/41, 4/45, 4/97, 4/101
Q34	6 bimetal sensors (NC contacts) for alarm and tripping (12 terminals)		2/102, 2/109, 3/21, 4/41, 4/45, 4/101
Q35	1 Pt1000 resistance thermometer (2 terminals)		2/102, 2/109, 3/21, 4/41, 4/45, 4/97, 4/101, 5/38, 5/42
Q36	2 Pt1000 resistance thermometers (4 terminals)		2/102, 2/109, 3/21, 4/41, 4/45, 4/97, 4/101, 5/38, 5/42
Q60	3 Pt100 resistance thermometers – 2-wire input (6 terminals)		2/102, 2/109, 3/21, 4/41, 4/45, 4/97, 4/101
Q61	6 Pt100 resistance thermometers – 2-wire input (12 terminals)		2/102, 2/109, 3/21, 4/41, 4/97
Q62	1 Pt100 resistance thermometers – 2-wire input (2 terminals)		2/102, 2/109, 3/21, 4/41, 4/45, 4/97, 4/101
Q63	3 Pt100 resistance thermometers – 3-wire input (9 terminals)		2/102, 2/109, 3/21, 4/41, 4/45, 4/97, 4/101
Q64	6 Pt100 resistance thermometers – 3-wire input (18 terminals)		2/102, 2/109, 3/21, 4/41, 4/45, 4/97, 4/101
Q72	2 Pt100 screw-in thermometers in basic configuration for bearings (2 terminals)		2/102, 2/109, 3/21, 4/41, 4/45, 4/97, 4/101, 5/42
Q78	2 Pt100 screw-in thermometers in 3-wire input for bearing (6 terminals)		2/102, 2/109, 3/21, 4/41, 4/45, 4/97, 4/101, 5/42
Q79	2 Pt100 double screw-in thermometers in 3-wire input for bearing (12 terminals)		2/102, 2/109, 3/21, 4/41, 4/45, 4/97, 4/101, 5/42
Q80	Extension of the liability for defects period by 12 months to a total of 24 months (2 years) from delivery	Extension of the liability for defects	2/115, 3/26, 4/48, 4/104
Q81 *New!*	Extension of the liability for defects period by 18 months to a total of 30 months (2.5 years) from delivery		3/26
Q82	Extension of the liability for defects period by 24 months to a total of 36 months (3 years) from delivery		2/115, 3/26, 4/48, 4/104
Q83 *New!*	Extension of the liability for defects period by 30 months to a total of 42 months (3.5 years) from delivery		3/26
Q84 *New!*	Extension of the liability for defects period by 36 months to a total of 48 months (4 years) from delivery		3/26
Q85 *New!*	Extension of the liability for defects period by 42 months to a total of 60 months (5 years) from delivery		3/26
R10	Rotation of the terminal box through 90°, entry from DE	Motor connection and terminal boxes	2/102, 2/109, 3/21, 4/41, 4/45, 4/97, 4/101, 5/38, 5/42
R11	Rotation of the terminal box through 90°, entry from NDE		2/102, 2/109, 3/21, 4/41, 4/45, 4/97, 4/101, 5/38, 5/42
R12	Rotation of the terminal box through 180°		2/102, 2/110, 3/22, 4/41, 4/45, 4/97, 4/101, 5/38, 5/42, 6/21, 6/23
R13	Terminal box in position 0°; connection from right		2/102, 4/41, 4/97, 6/21, 6/23
R14	One EMC cable gland		2/110, 3/22, 4/45, 4/101
R15	One metal cable gland		2/102, 2/110, 3/22, 4/41, 4/45, 4/97, 4/101
R16	EMC cable gland, maximum configuration		2/110, 3/22, 4/45, 4/101
R17	Stud terminal for cable connection, accessories pack (3 items)		2/110, 3/22, 4/101, 5/42
R18	Metal cable gland, maximum configuration		2/102, 2/110, 3/22, 4/41, 5/38, 5/42
R19	Saddle terminal for connection without cable lug, accessories pack		2/110, 3/22, 4/101, 5/42
R20	3 cables protruding, 0.5 m long		2/102, 2/110, 4/41, 4/97
R21	3 cables protruding, 1.5 m long		2/102, 2/110, 3/22, 4/41
R22	6 cables protruding, 0.5 m long		2/102, 2/110, 4/41, 4/97
R23	6 cables protruding, 1.5 m long		2/102, 2/110, 3/22, 4/41
R24	6 cables protruding, 3 m long		2/103, 2/110, 3/22, 4/41
R30	Reduction piece for M cable gland in accordance with British Standard, mounted on both cable entries		2/103, 2/110
R50	Larger terminal box		2/103, 2/110, 3/22, 4/41, 4/45, 4/97, 4/101, 5/38, 5/42
R51	Terminal box without cable entry opening		2/110, 3/22, 4/45, 4/101
R52	Drilled removable entry plate		2/110, 3/22, 4/45, 4/101

© Siemens AG 2018

Index of order codes

Order code	Special versions	Category	For further information, see page
R53	Undrilled removable entry plate	Motor connection and terminal boxes	2/110, 3/22, 4/45, 4/101
R60	Auxiliary terminal box, aluminum		2/103
R62	Cast-iron auxiliary terminal box (small)		2/110, 3/22, 4/45, 4/102, 5/42
R63 *New!*	Larger cast-iron terminal box		3/22
R70	Motor connector Han-Drive 10e for 230 VΔ/400 VY		2/103, 4/41, 4/97
R71	Motor connector Han-Drive 10e EMC for 230 VΔ/400 VY		2/103, 4/41, 4/97
R72	Small motor connector CQ12 with EMC		2/103
R73	Small motor connector CQ12 without EMC		2/103
R74	Silicone-free version		2/110, 3/22, 4/102
S00	Unpainted (only cast-iron parts primed)	Colors and paint finish	2/104, 2/111, 3/23, 4/42, 4/46, 4/98, 4/102, 5/39, 5/43, 6/21, 6/23
S01	Unpainted, only primed		2/104, 2/111, 3/23, 4/42, 4/46, 4/98, 4/102, 5/39, 5/43, 6/21, 6/23
S02	Special paint finish C3		2/104, 2/111, 3/23, 4/42, 4/46, 4/98, 4/102, 5/39, 5/43, 6/23
S03	Special paint finish sea air resistant C4		2/104, 2/111, 3/23, 4/42, 4/46, 4/98, 4/102, 5/39, 5/43, 6/21, 6/23
S04	Special paint for use offshore C5		2/111, 3/23, 4/46, 4/102, 5/43
S05	Internal coating		2/104, 2/111, 3/23, 4/42, 4/46, 4/98, 4/102, 6/23
S06	Top coat polyurethane		2/104, 2/111, 3/23, 5/39, 5/43, 6/21, 6/23
Y50 and spec. power, CT .. °C or IA …. m above sea level	Temperature class 155 (F), utilized acc. to 130 (B), with higher coolant temperature and/or installation altitude	Windings and insulation	2/103, 2/111, 3/22, 5/39, 5/43
Y52 and spec. power, CT .. °C or IA …. m above sea level	Temperature class 155 (F), utilized according to 155 (F), other requirements		2/103, 2/111, 3/22
Y53 and paint finish RAL….	Paint finish in other standard RAL colors: RAL 1002, 1013, 1015, 1019, 2003, 2004, 3000, 3007, 5007, 5009, 5010, 5012, 5015, 5017, 5018, 5019, 6011, 6019, 6021, 7000, 7001, 7004, 7011, 7016, 7022, 7031, 7032, 7033, 7035, 9001, 9002, 9005	Colors and paint finish	2/104, 2/111, 3/23, 4/46, 4/98, 4/102, 5/39, 5/43, 6/21, 6/23
Y56 and paint finish RAL….	Paint finish in special RAL colors: For RAL colors, see "Special paint finish in special RAL colors"		2/104, 2/111, 3/23, 4/42, 4/46, 4/98, 4/102, 5/39, 5/43, 6/21, 6/23
Y58 and customer specifications	Non-standard cylindrical shaft extension, DE	Shaft and rotor	2/106, 2/114, 3/26, 4/43, 4/47, 4/99, 4/104, 5/40, 5/45, 6/22, 6/24
Y59 and customer specifications	Non-standard cylindrical shaft extension, NDE		2/106, 2/114, 3/26, 4/43, 4/47, 4/99, 4/104, 5/40, 5/45, 6/22, 6/24
Y60 and customer specifications	Special shaft steel		2/114, 3/26, 4/47, 4/104, 6/22, 6/24
Y61 and customer specifications	Non-standard threaded through hole (NPT or G thread)	Motor connection and terminal boxes	2/110, 3/22, 4/45, 4/102
Y68 and converter type	Operating data such as the B40 order code with alternative SINAMICS converter on the rating plate • G120 with PM230 • G120 with PM240 • G120C • G120P with PM230 • G120P with PM240-2 • G120P with PM240P-2 • G120P with PM330 • G130, G150, G180 • S120 (BLM/SLM) • V20 Operating data such as the B41 order code with alternative SINAMICS converter on the rating plate • S120 (ALM)	Version for converter operation	5/38, 5/42

© Siemens AG 2018

Order code	Special versions	Category	For further information, see page
Y70 • and customer specifi-cations	Mounting of a special type of rotary pulse encoder	Special technology	4/46, 4/102
Y74 • and spec. speed .... rpm	Mounting of rotary pulse encoder HOG 10 DN 1024 I + FSL, (integrated centrifugal switch, speed ... rpm), terminal box moisture protection		2/112, 3/24
Y75 • and spec. power, CT .. °C or IA .... m above sea level	Temperature class 180 (H), utilized according to 155 (F)	Windings and insulation	2/103, 2/111, 3/22
Y76 • and spec. speed .... rpm	Mounting of rotary pulse encoder HOG 10 DN 1024 I + FSL, (integrated centrifugal switch, speed .... rpm), terminal box dust protection	Special technology	2/112, 3/24
Y79 • and spec. speed (max. 3) .... rpm	Mounting of rotary pulse encoder HOG 10 DN 1024 I + ESL 93, (integrated electronic speed switch, speed ... rpm), terminal box dust protection		2/112, 3/24
Y80 • and customer specifi-cations	Additional rating plate with deviating rating plate data	Rating plate and additional rating plates	2/106, 2/115, 3/26, 5/40, 5/45, 6/22, 6/24
Y81 • and customer specifi-cations	Separately driven fan with non-standard voltage and/or frequency	Heating and ventilation	2/115, 3/26, 4/104
Y82 • and customer specifi-cations	Additional rating plate with customer specifications	Rating plate and additional rating plates	2/106, 2/115, 3/26, 4/43, 4/48, 4/99, 4/104, 5/40, 5/45, 6/22, 6/24
Y84 • and customer specifi-cations	Additional information on rating plate and on package label (max. 20 characters)		2/106, 2/115, 3/26, 4/43, 4/48, 4/99, 4/104, 5/40, 5/45, 6/22, 6/24
Y85 • and customer specifi-cations	Adhesive label, supplied loose (printed with: Article No., Serial No.; 2 lines of text)		2/106, 2/115, 3/26, 4/43, 4/48, 4/99, 4/104
Y98 • and customer specifi-cations	Printed Operating Instructions (Compact) for explosion-proof motors enclosed in other official EU languages	Packaging, safety notes, documentation and test certificates	5/41, 5/45

© Siemens AG 2018

Appendix

Conversion tables

Rotary inertia (to convert from A to B, multiply by entry in table)

A \ B	lb-in^2	lb-ft^2	lb-in-s^2	lb-ft-s^2 slug-ft^2	kg-cm^2	kg-cm-s^2	gm-cm^2	gm-cm-s^2	oz-in^2	oz-in-s^2
lb-in^2	1	6.94×10^{-3}	2.59×10^{-3}	2.15×10^{-4}	2.926	2.98×10^{-3}	2.92×10^{3}	2.984	16	4.14×10^{-2}
lb-ft^2	144	1	0.3729	3.10×10^{-2}	421.40	0.4297	4.21×10^{5}	429.71	2304	5.967
lb-in-s^2	386.08	2.681	1	8.33×10^{-2}	1.129×10^{3}	1.152	1.129×10^{6}	1.152×10^{3}	6.177×10^{3}	16
lb-ft-s^2 slug-ft^2	4.63×10^{3}	32.17	12	1	1.35×10^{4}	13.825	1.355×10^{7}	1.38×10^{4}	7.41×10^{4}	192
kg-cm^2	0.3417	2.37×10^{-3}	8.85×10^{-4}	7.37×10^{-5}	1	1.019×10^{-3}	1000	1.019	5.46	1.41×10^{-2}
kg-cm-s^2	335.1	2.327	0.8679	7.23×10^{-2}	980.66	1	9.8×10^{5}	1000	5.36×10^{3}	13.887
gm-cm^2	3.417×10^{-4}	2.37×10^{-6}	8.85×10^{-7}	7.37×10^{-8}	1×10^{-3}	1.01×10^{-6}	1	1.01×10^{-3}	5.46×10^{-3}	1.41×10^{-5}
gm-cm-s^2	0.335	2.32×10^{-3}	8.67×10^{-4}	7.23×10^{-5}	0.9806	1×10^{-3}	980.6	1	5.36	1.38×10^{-2}
oz-in^2	0.0625	4.34×10^{-4}	1.61×10^{-4}	1.34×10^{-5}	0.182	1.86×10^{-4}	182.9	0.186	1	2.59×10^{-3}
oz-in-s^2	24.13	0.1675	6.25×10^{-2}	5.20×10^{-3}	70.615	7.20×10^{-2}	7.09×10^{4}	72.0	386.08	1

Torque (to convert from A to B, multiply by entry in table)

A \ B	lb-in	lb-ft	oz-in	N-m	kg-cm	kg-m	gm-cm	dyne-cm
lb-in	1	8.333×10^{-2}	16	0.113	1.152	1.152×10^{-2}	1.152×10^{3}	1.129×10^{6}
lb-ft	12	1	192	1.355	13.825	0.138	1.382×10^{4}	1.355×10^{7}
oz-in	6.25×10^{-2}	5.208×10^{-3}	1	7.061×10^{-3}	7.200×10^{-2}	7.200×10^{-4}	72.007	7.061×10^{4}
N-m	8.850	0.737	141.612	1	10.197	0.102	1.019×10^{4}	1×10^{7}
kg-cm	0.8679	7.233×10^{-2}	13.877	9.806×10^{-2}	1	10^{-2}	1000	9.806×10^{5}
kg-m	86.796	7.233	1.388×10^{3}	9.806	100	1	1×10^{5}	9.806×10^{7}
gm-cm	8.679×10^{-4}	7.233×10^{-5}	1.388×10^{-2}	9.806×10^{-5}	1×10^{-3}	1×10^{-5}	1	980.665
dyne-cm	8.850×10^{-7}	7.375×10^{-8}	1.416×10^{-5}	10^{-7}	1.0197×10^{-6}	1.019×10^{-8}	1.019×10^{-3}	1

Length (to convert from A to B, multiply by entry in table)

A \ B	inches	feet	cm	yd	mm	m
inches	1	0.0833	2.54	0.028	25.4	0.0254
feet	12	1	30.48	0.333	304.8	0.3048
cm	0.3937	0.03281	1	1.09×10^{-2}	10	0.01
yd	36	3	91.44	1	914.4	0.914
mm	0.03937	0.00328	0.1	1.09×10^{-3}	1	0.001
m	39.37	3.281	100	1.09	1000	1

Power (to convert from A to B, multiply by entry in table)

A \ B	hp	Watts
hp (English)	1	745.7
(lb-in) (deg./s)	2.645×10^{-6}	1.972×10^{-3}
(lb-in) (rpm)	1.587×10^{-5}	1.183×10^{-2}
(lb-ft) (deg./s)	3.173×10^{-5}	2.366×10^{-2}
(lb-ft) (rpm)	1.904×10^{-4}	0.1420
Watts	1.341×10^{-3}	1

Force (to convert from A to B, multiply by entry in table)

A \ B	lb	oz	gm	dyne	N
lb	1	16	453.6	4.448×10^{5}	4.4482
oz	0.0625	1	28.35	2.780×10^{4}	0.27801
gm	2.205×10^{-3}	0.03527	1	1.02×10^{-3}	N.A.
dyne	2.248×10^{-6}	3.59×10^{-5}	980.7	1	0.00001
N	0.22481	3.5967	N.A.	100000	1

Mass (to convert from A to B, multiply by entry in table)

A \ B	lb	oz	gm	kg	slug
lb	1	16	453.6	0.4536	0.0311
oz	6.25×10^{-2}	1	28.35	0.02835	1.93×10^{-3}
gm	2.205×10^{-3}	3.527×10^{-2}	1	10^{-3}	6.852×10^{-5}
kg	2.205	35.27	10^{3}	1	6.852×10^{-2}
slug	32.17	514.8	1.459×10^{4}	14.59	1

Rotation (to convert from A to B, multiply by entry in table)

A \ B	rpm	rad/s	degrees/s
rpm	1	0.105	6.0
rad/s	9.55	1	57.30
degrees/s	0.167	1.745×10^{-2}	1

© Siemens AG 2018

Temperature Conversion

°F	°C	°C	°F
0	–17.8	–10	14
32	0	0	32
50	10	10	50
70	21.1	20	68
90	32.2	30	86
98.4	37	37	98.4
212	100	100	212
subtract 32 and multiply by $^5/_9$		multiply by $^9/_5$ and add 32	

Mechanism Efficiencies

Acme-screw with brass nut	~0.35–0.65
Acme-screw with plastic nut	~0.50–0.85
Ball-screw	~0.85–0.95
Chain and sprocket	~0.95–0.98
Preloaded ball-screw	~0.75–0.85
Spur or bevel-gears	~0.90
Timing belts	~0.96–0.98
Worm gears	~0.45–0.85
Helical gear (1 reduction)	~0.92

Friction Coefficients

Materials	μ
Steel on steel (greased)	~0.15
Plastic on steel	~0.15–0.25
Copper on steel	~0.30
Brass on steel	~0.35
Aluminum on steel	~0.45
Steel on steel	~0.58

Mechanism	μ
Ball bushings	<0.001
Linear bearings	<0.001
Dove-tail slides	~0.2++
Gibb ways	~0.5++

Material Densities

Material	lb-in^3	gm-cm^3
Aluminum	0.096	2.66
Brass	0.299	8.30
Bronze	0.295	8.17
Copper	0.322	8.91
Hard wood	0.029	0.80
Soft wood	0.018	0.48
Plastic	0.040	1.11
Glass	0.079–0.090	2.2–2.5
Titanium	0.163	4.51
Paper	0.025–0.043	0.7–1.2
Polyvinyl chloride	0.047–0.050	1.3–1.4
Rubber	0.033–0.036	0.92–0.99
Silicone rubber, without filler	0.043	1.2
Cast iron, gray	0.274	7.6
Steel	0.280	7.75

Wire Gauges[1)]

Cross-section mm^2	Standard Wire Gauge (SWG)	American Wire Gauge (AWG)
0.2	25	24
0.3	23	22
0.5	21	20
0.75	20	19
1.0	19	18
1.5	17	16
2.5	15	13
4	13	11
6	12	9
10	9	7
16	7	6
25	5	3
35	3	2
50	0	1/0
70	000	2/0
95	00000	3/0
120	0000000	4/0
150	–	6/0
185	–	7/0

1) The table shows approximate SWG/AWG sizes nearest to standard metric sizes; the cross-sections do not match exactly.

© Siemens AG 2018

Explanation of the raw material/metal surcharges[1)]

Surcharge calculation

To compensate for variations in the price of the raw materials silver, copper, aluminum, lead, gold, dysprosium[2)] and/or neodym[2)], surcharges are calculated on a daily basis using the so-called metal factor for products containing these raw materials. A surcharge for the respective raw material is calculated as a supplement to the price of a product if the basic official price of the raw material in question is exceeded.

The surcharges are calculated in accordance with the following criteria:

- Basic official price of the raw material
  Basic official price from the day prior to receipt of the order or prior to release order (daily price) for[3)]
  - Silver (sales price, processed)
  - Gold (sales price, processed)

  and for[4)]
  - Copper (lower DEL notation + 1 %)
  - Aluminum (aluminum in cables)
  - Lead (lead in cables)
- Metal factor of the products
  Certain products are displayed with a metal factor. The metal factor determines the official price (for those raw materials concerned) as of which the metal surcharges are applied and the calculation method used (weight or percentage method). An exact explanation is given below.

Structure of the metal factor

The metal factor consists of several digits; the first digit indicates whether the percentage method of calculation refers to the list price or a possible discounted price (customer net price) (L = list price / N = customer net price).

The remaining digits indicate the method of calculation used for the respective raw material. If no surcharge is added for a raw material, a "-" is used.

1st digit	List or customer net price using the percentage method
2nd digit	for silver (AG)
3rd digit	for copper (CU)
4th digit	for aluminum (AL)
5th digit	for lead (PB)
6th digit	for gold (AU)
7th digit	for dysprosium (Dy)[2)]
8th digit	for neodym (Nd)[2)]

Weight method

The weight method uses the basic official price, the daily price and the raw material weight. In order to calculate the surcharge, the basic official price must be subtracted from the daily price. The difference is then multiplied by the raw material weight.

The basic official price can be found in the table below using the number (1 to 9) of the respective digit of the metal factor. The raw material weight can be found in the respective product descriptions.

Percentage method

Use of the percentage method is indicated by the letters A-Z at the respective digit of the metal factor.

The surcharge is increased - dependent on the deviation of the daily price compared with the basic official price - using the percentage method in "steps" and consequently offers surcharges that remain constant within the framework of this "step range". A higher percentage rate is charged for each new step. The respective percentage level can be found in the table below.

Metal factor examples

L E A – – – – –

Basis for % surcharge: List price
Silver Basis 150 €, Step 50 €, 0.5 %
Copper Basis 150 €, Step 50 €, 0.1 %
No surcharge for aluminum
No surcharge for lead
No surcharge for gold
No surcharge for dysprosium
No surcharge for neodym

N – A 6 – – – –

Basis for % surcharge: Customer net price
No surcharge for silver
Copper Basis 150 €, Step 50 €, 0.1 %
Aluminum acc. to weight, basic offic. price 225 €
No surcharge for lead
No surcharge for gold
No surcharge for dysprosium
No surcharge for neodym

– – 3 – – – – –

No basis necessary
No surcharge for silver
Copper acc. to weight, basic official price 150 €
No surcharge for aluminum
No surcharge for lead
No surcharge for gold
No surcharge for dysprosium
No surcharge for neodym

1) Refer to the separate explanation on the next page regarding the raw materials dysprosium and neodym (= rare earths).
2) For a different method of calculation, refer to the separate explanation for these raw materials on the next page.
3) Source: Umicore, Hanau (www.metalsmanagement.umicore.com).
4) Source: Schutzvereinigung DEL-Notiz e.V. (www.del-notiz.org).

© Siemens AG 2018

Explanation of the raw material/metal surcharges for dysprosium and neodym (rare earths)

Surcharge calculation

To compensate for variations in the price of the raw materials silver[1], copper[1], aluminum[1], lead[1], gold[1], dysprosium and/or neodym, surcharges are calculated on a daily basis using the so-called metal factor for products containing these raw materials. The surcharge for dysprosium and neodym is calculated as a supplement to the price of a product if the basic official price of the raw material in question is exceeded.

The surcharge is calculated in accordance with the following criteria:

- Basic official price of the raw material[2]
  Three-month basic average price (see below) in the period before the quarter in which the order was received or the release order took place (= average official price) for
  - dysprosium (Dy metal, 99 % min. FOB China; USD/kg)
  - neodym (Nd metal, 99 % min. FOB China; USD/kg)
- Metal factor of the products
  Certain products are displayed with a metal factor. The metal factor indicates (for those raw materials concerned) the basic official price as of which the surcharges for dysprosium and neodym are calculated using the weight method. An exact explanation of the metal factor is given below.

Three-month average price

The prices of rare earths vary according to the foreign currency, and there is no freely accessible stock exchange listing. This makes it more difficult for all parties involved to monitor changes in price. In order to avoid continuous adjustment of the surcharges, but to still ensure fair, transparent pricing, an average price is calculated over a three-month period using the average monthly foreign exchange rate from USD to EUR (source: European Central Bank). Since not all facts are immediately available at the start of each month, a one-month buffer is allowed before the new average price applies.

Examples of calculation of the average official price:

Period for calculation of the average price:	Period during which the order/release order is effected and the average price applies:
Sep 2012 - Nov 2012	Q1 in 2013 (Jan - Mar)
Dec 2012 - Feb 2013	Q2 in 2013 (Apr - Jun)
Mar 2013 - May 2013	Q3 in 2013 (Jul - Sep)
Jun 2013 - Aug 2013	Q4 in 2013 (Oct - Dec)

Structure of the metal factor

The metal factor consists of several digits; the first digit is not relevant to the calculation of dysprosium and neodym.

The remaining digits indicate the method of calculation used for the respective raw material. If no surcharge is added for a raw material, a "-" is used.

1st digit	List or customer net price using the percentage method
2nd digit	for silver (AG)[1]
3rd digit	for copper (CU)[1]
4th digit	for aluminum (AL)[1]
5th digit	for lead (PB)[1]
6th digit	for gold (AU)[1]
7th digit	for dysprosium (Dy)
8th digit	for neodym (Nd)

Weight method

The weight method uses the basic official price, the average price and the raw material weight. In order to calculate the surcharge, the basic official price must be subtracted from the average price. The difference is then multiplied by the raw material weight.

The basic official price can be found in the table below using the number (1 to 9) of the respective digit of the metal factor. Your Sales contact can inform you of the raw material weight.

Metal factor examples

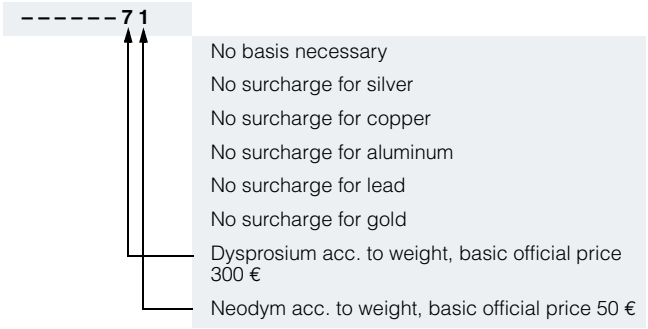

[1] For a different method of calculation, refer to the separate explanation for these raw materials on the previous page.

[2] Source: Asian Metal Ltd (www.asianmetal.com)

© Siemens AG 2018

Metal surcharges

Values of the metal factor

Percentage method	Basic official price in €	Step range in €	% surcharge 1st step	% surcharge 2nd step	% surcharge 3rd step	% surcharge 4th step	% surcharge per additional step
			Price in €	Price in €	Price in €	Price in €	
			150.01 - 200.00	200.01 - 250.00	250.01 - 300.00	300.01 - 350.00	
A	150	50	0.1	0.2	0.3	0.4	0.1
B	150	50	0.2	0.4	0.6	0.8	0.2
C	150	50	0.3	0.6	0.9	1.2	0.3
D	150	50	0.4	0.8	1.2	1.6	0.4
E	150	50	0.5	1.0	1.5	2.0	0.5
F	150	50	0.6	1.2	1.8	2.4	0.6
G	150	50	1.0	2.0	3.0	4.0	1.0
H	150	50	1.2	2.4	3.6	4.8	1.2
I	150	50	1.6	3.2	4.8	6.4	1.6
J	150	50	1.8	3.6	5.4	7.2	1.8
			175.01 - 225.00	225.01 - 275.00	275.01 - 325.00	325.01 - 375.00	
O	175	50	0.1	0.2	0.3	0.4	0.1
P	175	50	0.2	0.4	0.6	0.8	0.2
R	175	50	0.5	1.0	1.5	2.0	0.5
			225.01 - 275.00	275.01 - 325.00	325.01 - 375.00	375.01 - 425.00	
S	225	50	0.2	0.4	0.6	0.8	0.2
U	225	50	1.0	2.0	3.0	4.0	1.0
V	225	50	1.0	1.5	2.0	3.0	1.0
W	225	50	1.2	2.5	3.5	4.5	1.0
			150.01 - 175.00	175.01 - 200.00	200.01 - 225.00	225.01 - 250.00	
Y	150	25	0.3	0.6	0.9	1.2	0.3
			400.01 - 425.00	425.01 - 450.00	450.01 - 475.00	475.01 - 500.00	
Z	400	25	0.1	0.2	0.3	0.4	0.1
	Price basis (1st digit)						
L	Calculation based on the list price						
N	Calculation based on the customer net price (discounted list price)						
Weight method	**Basic official price in €**						
1	50	Calculation based on raw material weight					
2	100						
3	150						
4	175						
5	200						
6	225						
7	300						
8	400						
9	555						
Miscellaneous							
-	No metal surcharge						

© Siemens AG 2018

1. General Provisions

By using this catalog you can acquire hardware and software products described therein from Siemens AG subject to the following Terms and Conditions of Sale and Delivery (hereinafter referred to as "T&C"). Please note that the scope, the quality and the conditions for supplies and services, including software products, by any Siemens entity having a registered office outside Germany, shall be subject exclusively to the General Terms and Conditions of the respective Siemens entity. The following T&C apply exclusively for orders placed with Siemens Aktiengesellschaft, Germany.

1.1 For customers with a seat or registered office in Germany

For customers with a seat or registered office in Germany, the following applies subordinate to the T&C:

- for installation work the "General Conditions for Erection Works – Germany"[1)] ("Allgemeine Montagebedingungen – Deutschland" (only available in German at the moment)) and/or
- for Plant Analytics Services the "Standard Terms and Conditions for Plant Analytics Services – for Customer in Germany"[1)] ("Allgemeine Geschäftsbedingungen für das Plant Analytics Services – für Kunden in Deutschland" (only available in German at the moment)) and/or
- for stand-alone software products and software products forming a part of a product or project, the "General License Conditions for Software Products for Automation and Drives for Customers with a Seat or registered Office in Germany"[1)] and/or
- for other supplies and/or services the "General Conditions for the Supply of Products and Services of the Electrical and Electronics Industry"[1)].
  In case such supplies and/or services should contain Open Source Software, the conditions of which shall prevail over the " General Conditions for the Supply of Products and Services of the Electrical and Electronics Industry "[1)]. A notice will be contained in the scope of delivery in which the applicable conditions for Open Source Software are specified. This shall apply mutatis mutandis for notices referring to other third party software components.

1.2 For customers with a seat or registered office outside Germany

For customers with a seat or registered office outside Germany, the following applies subordinate to the T&C:

- for Plant Analytics Services the "Standard Terms and Conditions for Plant Analytics Services"[1)] and/or
- for services the "International Terms & Conditions for Services"[1)] supplemented by "Software Licensing Conditions"[1)] and/or
- for other supplies of hard- and/or software the "International Terms & Conditions for Products"[1)] supplemented by "Software Licensing Conditions" [1)]

1.3 For customers with master or framework agreement

To the extent our supplies and/or services offered are covered by an existing master or framework agreement, the terms and conditions of that agreement shall apply instead of T&C.

2. Prices

The prices are in € (Euro) ex point of delivery, exclusive of packaging.

The sales tax (value added tax) is not included in the prices. It shall be charged separately at the respective rate according to the applicable statutory legal regulations.

Prices are subject to change without prior notice. We will charget the prices valid at the time of delivery.

To compensate for variations in the price of raw materials (e.g. silver, copper, aluminum, lead, gold, dysprosium and neodym), surcharges are calculated on a daily basis using the so-called metal factor for products containing these raw materials. A surcharge for the respective raw material is calculated as a supplement to the price of a product if the basic official price of the raw material in question is exceeded.

The metal factor of a product indicates the basic official price (for those raw materials concerned) as of which the surcharges on the price of the product are applied, and with what method of calculation.

You will find a detailed explanation of the metal factor on the page headed "Metal surcharges".

To calculate the surcharge (except in the cases of dysprosium and neodym), the official price from the day prior to that on which the order was received or the release order was effected is used.

To calculate the surcharge applicable to dysprosium and neodym ("rare earths"), the corresponding three-month basic average price in the quarter prior to that in which the order was received or the release order was effected is used with a one-month buffer (details on the calculation can be found in the explanation of the metal factor).

3. Additional Terms and Conditions

The dimensions are in mm. In Germany, according to the German law on units in measuring technology, data in inches apply only to devices for export.

Illustrations are not binding.

Insofar as there are no remarks on the individual pages of this catalog - especially with regard to data, dimensions and weights given - these are subject to change without prior notice.

[1)] The text of the Terms and Conditions of Siemens AG can be downloaded at
www.siemens.com/automation/salesmaterial-as/catalog/en/terms_of_trade_en.pdf

© Siemens AG 2018

4. Export regulations

We shall not be obligated to fulfill any agreement if such fulfillment is prevented by any impediments arising out of national or international foreign trade or customs requirements or any embargoes and/or other sanctions.

Export may be subject to license. We shall indicate in the delivery details whether licenses are required under German, European and US export lists.

Our products are controlled by the U.S. Government (when labeled with "ECCN" unequal "N") and authorized for export only to the country of ultimate destination for use by the ultimate consignee or end-user(s) herein identified. They may not be resold, transferred, or otherwise disposed of, to any other country or to any person other than the authorized ultimate consignee or end-user(s), either in their original form or after being incorporated into other items, without first obtaining approval from the U.S. Government or as otherwise authorized by U.S. law and regulations.

The export indications can be viewed in advance in the description of the respective goods on the Industry Mall, our online catalog system. Only the export labels "AL" and "ECCN" indicated on order confirmations, delivery notes and invoices are authoritative.

Products labeled with "AL" unequal "N" are subject to European / national export authorization. Products without label, with label "AL:N" / "ECCN:N", or label "AL:9X9999" / "ECCN: 9X9999" may require authorization from responsible authorities depending on the final end-use, or the destination.

If you transfer goods (hardware and/or software and/or technology as well as corresponding documentation, regardless of the mode of provision) delivered by us or works and services (including all kinds of technical support) performed by us to a third party worldwide, you must comply with all applicable national and international (re-)export control regulations.

If required for the purpose of conducting export control checks, you (upon request by us) shall promptly provide us with all information pertaining to the particular end customer, final disposition and intended use of goods delivered by us respectively works and services provided by us, as well as to any export control restrictions existing in this relation.

The products listed in this catalog may be subject to European/German and/or US export regulations. Any export requiring approval is therefore subject to authorization by the relevant authorities.

Errors excepted and subject to change without prior notice.

© Siemens AG 2018

Catalogs

Digital Factory, Process Industries and Drives and Energy Management

Further information can be obtained from our branch offices listed at www.siemens.com/automation-contact

Interactive Catalog on DVD	*Catalog*
Products for Automation and Drives	**CA 01**
Building Control	
GAMMA Building Control	ET G1
Drive Systems	
SINAMICS G130 Drive Converter Chassis Units SINAMICS G150 Drive Converter Cabinet Units	D 11
SINAMICS GM150, SINAMICS SM150 Medium-Voltage Converters	D 12
Digital: SINAMICS PERFECT HARMONY GH180 Medium-Voltage Air-Cooled Drives (Germany Edition)	*D 15.1*
SINAMICS G180 Converters – Compact Units, Cabinet Systems, Cabinet Units Air-Cooled and Liquid-Cooled	D 18.1
SINAMICS S120 Chassis Format Converter Units SINAMICS S120 Cabinet Modules SINAMICS S150 Converter Cabinet Units	D 21.3
SINAMICS S120 and SIMOTICS	D 21.4
SINAMICS DCM DC Converter, Control Module	D 23.1
SINAMICS Inverters for Single-Axis Drives · Built-In Units	D 31.1
SINAMICS Inverters for Single-Axis Drives · Distributed Inverters	D 31.2
Digital: SINAMICS S210 Servo Drive System	*D 32*
Digital: SINAMICS V90 Basic Servo Drive System	*D 33*
Digital: SINAMICS G120P and SINAMICS G120P Cabinet pump, fan, compressor converters	*D 35*
LOHER VARIO High Voltage Motors Flameproof, Type Series 1PS4, 1PS5, 1MV4 and 1MV5 Frame Size 355 to 1000, Power Range 80 to 7100 kW	D 83.2
Digital: Three-Phase Induction Motors SIMOTICS HV, SIMOTICS TN	*D 84.1*
Digital: Three-Phase Induction Motors SIMOTICS HV	*D 84.3*
High Voltage Three-phase Induction Motors SIMOTICS HV Series A-compact PLUS	D 84.9
Digital: Modular Industrial Generators SIGENTICS M	*D 85.1*
Three-Phase Induction Motors SIMOTICS HV, Series H-compact	D 86.1
Synchronous Motors with Permanent-Magnet Technology, HT-direct	D 86.2
DC Motors	DA 12
SIMOVERT PM Modular Converter Systems	DA 45
MICROMASTER 420/430/440 Inverters	DA 51.2
MICROMASTER 411/COMBIMASTER 411	DA 51.3
Low-Voltage Three-Phase-Motors	
SIMOTOCS S-1FG1 Servo geared motors	D 41
SIMOTICS Low-Voltage Motors	D 81.1
SIMOTICS FD Low-Voltage Motors	D 81.8
LOHER Low-Voltage Motors	D 83.1
Digital: MOTOX Geared Motors	*D 87.1*
SIMOGEAR Geared Motors	MD 50.1
SIMOGEAR Electric-monorail geared motors Light-load and heavy-load applications	MD 50.8
SIMOGEAR Gearboxes with adapter	MD 50.11
Mechanical Driving Machines	
FLENDER Standard Couplings	MD 10.1
FLENDER High Performance Couplings	MD 10.2
FLENDER Backlash-free Couplings	MD 10.3
FLENDER SIP Standard industrial planetary gear units	MD 31.1

Digital: These catalogs are only available as a PDF.

Process Instrumentation and Analytics	*Catalog*
Digital: Field Instruments for Process Automation	*FI 01*
Digital: Display Recorders SIREC D	*MP 20*
Digital: SIPART Controllers and Software	*MP 31*
Products for Weighing Technology	WT 10
Digital: Process Analytical Instruments	*AP 01*
Digital: Process Analytics, Components for Continuous Emission Monitoring	*AP 11*
Low-Voltage Power Distribution and Electrical Installation Technology	
SENTRON · SIVACON · ALPHA Protection, Switching, Measuring and Monitoring Devices, Switchboards and Distribution Systems	LV 10
Standards-Compliant Components for Photovoltaic Plants	LV 11
Electrical Components for the Railway Industry	LV 12
Power Monitoring Made Simple	LV 14
Components for Industrial Control Panels according to UL Standards	LV 16
3WT Air Circuit Breakers up to 4000 A	LV 35
3VT Molded Case Circuit Breakers up to 1600 A	LV 36
Digital: SIVACON System Cubicles, System Lighting and System Air-Conditioning	*LV 50*
Digital: ALPHA Distribution Systems	*LV 51*
ALPHA FIX Terminal Blocks	LV 52
SIVACON S4 Power Distribution Boards	LV 56
SIVACON 8PS Busbar Trunking Systems	LV 70
Digital: DELTA Switches and Socket Outlets	*ET D1*
Vacuum Switching Technology and Components for Medium Voltage	HG 11.01
Motion Control	
SINUMERIK 840 Equipment for Machine Tools	NC 62
SINUMERIK 808 Equipment for Machine Tools	NC 81.1
SINUMERIK 828 Equipment for Machine Tools	NC 82
SIMOTION Equipment for Production Machines	PM 21
Digital: Drive and Control Components for Cranes	*CR 1*
Power Supply	
SITOP Power supply	KT 10.1
Safety Integrated	
Safety Technology for Factory Automation	SI 10
SIMATIC HMI / PC-based Automation	
Human Machine Interface Systems/ PC-based Automation	ST 80/ ST PC
SIMATIC Ident	
Industrial Identification Systems	ID 10
SIMATIC Industrial Automation Systems	
Products for Totally Integrated Automation	ST 70
SIMATIC PCS 7 Process Control System System components	ST PCS 7
SIMATIC PCS 7 Process Control System Technology components	ST PCS 7 T
Add-ons for the SIMATIC PCS 7 Process Control System	ST PCS 7 AO
SIMATIC S7-400 advanced controller	ST 400
SIMATIC NET	
Industrial Communication	IK PI
SIRIUS Industrial Controls	
Digital: SIRIUS Industrial Controls	*IC 10*

Information and Download Center

Digital versions of the catalogs are available on the Internet at:
www.siemens.com/industry/infocenter
There you'll find additional catalogs in other languages.

Please note the section "Downloading catalogs" on page "Online services" in the appendix of this catalog.

© Siemens AG 2018

Get more information

Siemens Motors:
www.siemens.com/motors

Local partners worldwide:
www.siemens.com/automation-contact

Siemens AG
Process Industries and Drives
Postfach 48 48
90026 Nuernberg
Germany

© Siemens AG 2018
Subject to change without prior notice
Article No. E86060-K5581-A111-B2-7600
V6.MKKATA.LDT.141 / Dispo 18400
KG 0618 3. HOF/AUM 572 En
Printed in Germany

The information provided in this catalog contains merely general descriptions or characteristics of performance which in case of actual use do not always apply as described or which may change as a result of further development of the products. An obligation to provide the respective characteristics shall only exist if expressly agreed in the terms of contract. Availability and technical specifications are subject to change without notice.

All product designations may be trademarks or product names of Siemens AG or supplier companies whose use by third parties for their own purposes could violate the rights of the owners.

Token fee: 5.00 €

Security information

Siemens provides products and solutions with industrial security functions that support the secure operation of plants, systems, machines and networks.

In order to protect plants, systems, machines and networks against cyber threats, it is necessary to implement – and continuously maintain – a holistic, state-of-the-art industrial security concept. Siemens' products and solutions constitute one element of such a concept.

Customers are responsible for preventing unauthorized access to their plants, systems, machines and networks. Such systems, machines and components should only be connected to an enterprise network or the internet if and to the extent such a connection is necessary and only when appropriate security measures (e.g. firewalls and/or network segmentation) are in place.

For additional information on industrial security measures that may be implemented, please visit
https://www.siemens.com/industrialsecurity

Siemens' products and solutions undergo continuous development to make them more secure. Siemens strongly recommends that product updates are applied as soon as they are available and that the latest product versions are used. Use of product versions that are no longer supported, and failure to apply the latest updates may increase customer's exposure to cyber threats.

To stay informed about product updates, subscribe to the Siemens Industrial Security RSS Feed under
https://www.siemens.com/industrialsecurity

Please scan the QR code for more information on Siemens Motors.