SIEMENS

Operating Instructions

SINAMICS

S150

Converter cabinet units 75 kW - 1200 kW

Edition 06/2020

www.siemens.com/drives

Промэлектроника, sales@prom-elec.com

SIEMENS

SINAMICS

SINAMICS S150
Converter cabinet units

Operating Instructions

Preface

Safety information 1

Device overview 2

Mechanical installation 3

Electrical installation 4

Commissioning 5

Operation 6

Setpoint channel and closed-loop control 7

Output terminals 8

Functions, monitoring, and protective functions 9

Diagnosis / faults and alarms 10

Maintenance and servicing 11

Technical specifications 12

Appendix A

Firmware version V5.2 SP3

06/2020

A5E03263522A

Legal information

Warning notice system

This manual contains notices you have to observe in order to ensure your personal safety, as well as to prevent damage to property. The notices referring to your personal safety are highlighted in the manual by a safety alert symbol, notices referring only to property damage have no safety alert symbol. These notices shown below are graded according to the degree of danger.

⚠DANGER
indicates that death or severe personal injury **will** result if proper precautions are not taken.

⚠WARNING
indicates that death or severe personal injury **may** result if proper precautions are not taken.

⚠CAUTION
indicates that minor personal injury can result if proper precautions are not taken.

NOTICE
indicates that property damage can result if proper precautions are not taken.

If more than one degree of danger is present, the warning notice representing the highest degree of danger will be used. A notice warning of injury to persons with a safety alert symbol may also include a warning relating to property damage.

Qualified Personnel

The product/system described in this documentation may be operated only by **personnel qualified** for the specific task in accordance with the relevant documentation, in particular its warning notices and safety instructions. Qualified personnel are those who, based on their training and experience, are capable of identifying risks and avoiding potential hazards when working with these products/systems.

Proper use of Siemens products

Note the following:

⚠WARNING
Siemens products may only be used for the applications described in the catalog and in the relevant technical documentation. If products and components from other manufacturers are used, these must be recommended or approved by Siemens. Proper transport, storage, installation, assembly, commissioning, operation and maintenance are required to ensure that the products operate safely and without any problems. The permissible ambient conditions must be complied with. The information in the relevant documentation must be observed.

Trademarks

All names identified by ® are registered trademarks of Siemens AG. The remaining trademarks in this publication may be trademarks whose use by third parties for their own purposes could violate the rights of the owner.

Disclaimer of Liability

We have reviewed the contents of this publication to ensure consistency with the hardware and software described. Since variance cannot be precluded entirely, we cannot guarantee full consistency. However, the information in this publication is reviewed regularly and any necessary corrections are included in subsequent editions.

Siemens AG
Digital Industries
Postfach 48 48
90026 NÜRNBERG
GERMANY

A5E03263522A
Ⓟ 09/2020 Subject to change

Copyright © Siemens AG 2007 - 2020.
All rights reserved

Preface

Structure of this documentation

The customer documentation comprises general and individual documentation.

The general documentation describes the topics that apply to all cabinet units:

- **Operating Instructions**
  The Operating Instructions consist of the following sections:
  - Device description
  - Mechanical installation
  - Electrical installation
  - Commissioning guide
  - Description of function
  - Maintenance instructions
  - Technical data
- **Overview diagrams**
  These provide a general overview of the functionality of the cabinet units.
- **List Manual**
  The List Manual consists of the following sections:
  - Parameter list
  - Function diagrams
  - Fault / warning list
- **Documentation for Drive Control Chart (DCC)**
  - Programming and Operating Manual: DCC Editor description
  - Function Manual: Description of the standard DCC blocks

The individual documentation describes precisely one customized cabinet unit and contains the following:

- **Dimension drawing**
  The dimension drawing documents the dimensions of the ordered cabinet unit.
- **Layout diagram**
  The components installed in the ordered cabinet units are shown in the layout diagram with the equipment and location codes.
- **Circuit diagram**
  The circuit diagram shows the electrical components installed in the ordered cabinet unit with the equipment and location codes, their interconnections and the customer interfaces.
- **Terminal diagram**
  The terminal diagram shows all the customer terminals in the ordered cabinet unit, and the associated internal wiring in the cabinet unit. This diagram documents the line-side target wiring.
- **Spare parts list**
  All of the available spare parts for the ordered cabinet units are listed in the spare parts list with the equipment and the location codes.
- **Additional operating instructions**
  The instructions for supplier components installed in the ordered cabinet unit are included as original documentation.

Documentation in the Internet

The documentation on SINAMICS S150 can be found on the Internet under the following link (https://support.industry.siemens.com/cs/ww/en/ps/13234/man).

Technical support

Time zone Europe/Africa	
Phone	+49 (0) 911 895 7222
Fax	+49 (0) 911 895 7223
Internet	Technical support (https://support.industry.siemens.com/cs/ww/en/sc/4868)

Time zone America	
Phone	+1 423 262 2522
Fax	+1 423 262 2200
Internet	techsupport.sea@siemens.com

Time zone Asia/Pacific	
Phone	+86 1064 757 575
Fax	+86 1064 747 474
Internet	support.asia.automation@siemens.com

Spare parts

Spare parts are available on the Internet at the following address (https://support.industry.siemens.com/sc/de/en/sc/2110).

The spare parts available for the ordered cabinet unit can be found in the spare parts list. These are provided on the customer DVD.

Siemens Support for on the move

With the "Siemens Industry Online Support" App, you can access more than 300,000 documents for Siemens Industry products – any time and from anywhere. The App supports you in the following areas:

- Resolving problems when executing a project
- Troubleshooting when faults develop
- Expanding a system or planning a new system

Further, you have access to the Technical Forum and other articles that our experts have drawn-up:

- FAQs
- Application examples
- Manuals
- Certificates
- Product announcements and much more

The App "Siemens Industry Online Support" is available for Apple iOS and Android.

Internet address

Information about SINAMICS can be found on the Internet at the following address:
http://www.siemens.com/sinamics

EMC limit values for South Korea

이 기기는 업무용(A급) 전자파적합기기로서 판매자 또는 사용자는 이 점을 주의하시기 바라며, 가정외의 지역에서 사용하는 것을 목적으로 합니다.

For sellers or other user, please keep in mind that this device in an A-grade electromagnetic wave device. This device is intended to be used in areas other than home.

The mandatory EMC limits for Korea correspond to the limits of EN 61800-3 (EMC product standard for adjustable speed electrical drive systems) for category C2 or to limit class A, Group 1 according to EN 55011.
Compliance with the limits according to category C2 or class A, group 1 is achieved with suitable additional measures. Furthermore, additional measures such as the use of an additional radio interference suppression filter (EMC filter) may be required.
In addition, measures for proper plant design to meet EMC requirements are described in detail in this manual and the "SINAMICS Low Voltage Configuration Manual".

Certifications

The following certifications can be found on the Internet under the link SINAMICS S150 certificates (https://support.industry.siemens.com/cs/de/en/ps/13234/cert):

- EC declaration of conformity with reference to the EMC directive:
- EC declaration of conformity with reference to the machinery directive (safety)
- Manufacturers declaration in reference to Safety Integrated

Web sites of third-party companies

This document includes hyperlinks to web sites of third-party companies Siemens accepts no responsibility for the content of these web sites, nor does it use these web sites and their content for its own use, as Siemens cannot check these web sites and is also not responsible for the content and information provided on them. The user uses these web sites at his own risk.

Use of OpenSSL

This product contains software (https://www.openssl.org/) that has been developed by the OpenSSL project for use in the OpenSSL toolkit.

This product contains cryptographic software (mailto:eay@cryptsoft.com) created by Eric Young.

This product contains software (mailto:eay@cryptsoft.com) developed by Eric Young.

Compliance with the General Data Protection Regulation

Siemens respects the principles of data protection, in particular the data minimization rules (privacy by design).

For this product, this means:
The product does not process or store any person-related data, only technical function data (e.g. time stamps). If the user links this data with other data (e.g. shift plans) or if he/she stores person-related data on the same data medium (e.g. hard disk), thus personalizing this data, he/she has to ensure compliance with the applicable data protection stipulations.

Table of contents

Preface ... **3**

1 Safety information ... **19**

1.1 General safety instructions ... 19

1.2 Handling the AOP30 backup battery ... 24

1.3 Handling electrostatic sensitive devices (ESD) ... 25

1.4 Industrial security ... 26

1.5 Residual risks of power drive systems ... 27

2 Device overview ... **29**

2.1 Chapter content ... 29

2.2 Applications, features ... 29
2.2.1 Applications ... 29
2.2.2 Features, quality, service ... 30

2.3 Structure ... 32

2.4 Wiring principle ... 34

2.5 Type plate ... 35

3 Mechanical installation ... **41**

3.1 Chapter content ... 41

3.2 Transportation and storage ... 41

3.3 Installation ... 43
3.3.1 Mechanical installation: checklist ... 44
3.3.2 Preparation ... 45
3.3.2.1 Requirements on the installation location ... 45
3.3.2.2 Requirements on the levelness of the floor ... 46
3.3.2.3 Shipping and handling monitors ... 47
3.3.2.4 Unpacking ... 49
3.3.2.5 Required tools ... 49
3.3.3 Installation ... 50
3.3.3.1 Lifting the cabinet off the transport pallet ... 50
3.3.3.2 Removing the crane transport aids ... 51
3.3.3.3 Connection to the foundation ... 53
3.3.4 Connecting separately shipped transport units ... 53
3.3.5 Fitting additional canopies (option M21) or hoods (option M23, M43, M54) ... 56
3.3.6 Line connection from above (option M13), motor connection from above (option M78) ... 62

4 Electrical installation ... **65**

4.1 Chapter content ... 65

4.2 Checklist for electrical installation ... 65

4.3 Important safety precautions ... 71

4.4 Introduction to EMC ... 72

4.5 EMC-compliant design ... 74

4.6 Power connections ... 76
4.6.1 Cable lugs ... 77
4.6.2 Connection cross-sections, cable lengths ... 78
4.6.3 Connecting shielded three-phase current cables ... 79
4.6.4 Connecting the motor and power cables ... 80
4.6.5 Adjusting the fan voltage (-G1 -T10, -T1 -T10) ... 81
4.6.6 Adjusting the internal power supply (-T10) ... 83
4.6.7 Removing the connection clip to the basic interference suppression module for operation on an ungrounded line supply (IT system) ... 84
4.6.8 Setting the circuit breaker ... 89

4.7 External supply of the auxiliary supply from a secure line ... 91

4.8 Signal connections ... 92
4.8.1 Control Unit CU320-2 DP ... 92
4.8.2 Customer terminal module TM31 (-A60) (Option G60) ... 109

4.9 Other connections ... 118
4.9.1 Infeed module rated one level lower (option L04) ... 119
4.9.2 dV/dt filter compact plus Voltage Peak Limiter (Option L07) ... 123
4.9.3 dv/dt filter plus Voltage Peak Limiter (option L10) ... 127
4.9.4 Sinusoidal filter (option L15) ... 130
4.9.5 Connection for external auxiliary equipment (Option L19) ... 133
4.9.6 Overvoltage limitation (option L21) ... 135
4.9.7 Main switch incl. fuses or main circuit breaker (option L26) ... 136
4.9.8 Line filter monitoring (option L40) ... 137
4.9.9 EMERGENCY OFF pushbutton installed in the cabinet door (option L45) ... 138
4.9.10 Cabinet illumination with service socket (option L50) ... 139
4.9.11 Cabinet anti-condensation heating (option L55) ... 140
4.9.12 EMERGENCY OFF category 0; 230 V AC or 24 V DC (option L57) ... 141
4.9.13 EMERGENCY STOP category 1; 230 V AC (option L59) ... 142
4.9.14 EMERGENCY STOP category 1; 24 V DC (option L60) ... 143
4.9.15 25 kW braking unit (option L61/L64); 50 kW braking unit (option L62/L65) ... 144
4.9.15.1 Installing the braking resistor ... 145
4.9.15.2 Commissioning ... 148
4.9.15.3 Diagnosis and duty cycles ... 150
4.9.15.4 Threshold switch ... 151
4.9.16 Thermistor motor protection unit (option L83/L84) ... 155
4.9.17 PT100 evaluation unit (option L86) ... 156
4.9.18 Insulation monitor (option L87) ... 157
4.9.19 CBC10 CAN Communication Board (option G20) ... 159
4.9.20 Communication Board Ethernet CBE20 (option G33) ... 162
4.9.21 TM150 temperature sensor module (option G51) ... 165
4.9.21.1 Description ... 165
4.9.21.2 Connecting ... 166
4.9.21.3 Connection examples ... 169
4.9.22 SMC10 Sensor Module Cabinet-Mounted (option K46) ... 171
4.9.22.1 Description ... 171
4.9.22.2 Connection ... 172

4.9.22.3 Connection example ... 174
4.9.23 SMC20 Sensor Module Cabinet-Mounted (option K48) ... 176
4.9.23.1 Description ... 176
4.9.23.2 Connection ... 177
4.9.23.3 Connection example ... 179
4.9.24 SMC30 Sensor Module Cabinet-Mounted (option K50) ... 181
4.9.24.1 Description ... 181
4.9.24.2 Connection ... 185
4.9.24.3 Connection examples ... 189
4.9.25 Voltage Sensing Module for determining the actual motor speed and the phase angle (option K51) ... 190
4.9.26 Additional SMC30 Sensor Module (option K52) ... 191
4.9.27 Customer terminal block (option G60) ... 191
4.9.28 Additional customer terminal block TM31 (option G61) ... 192
4.9.29 Terminal Board TB30 (option G62) ... 193
4.9.30 Safety license for 1 axis (option K01) ... 200
4.9.31 Terminal module for activation of "Safe Torque Off" and "Safe STOP 1" (option K82) ... 201
4.9.32 Terminal Module TM54F (option K87) ... 202
4.9.33 Safe Brake Adapter SBA 230 V AC (option K88) ... 204
4.9.34 Control Unit CU320-2 PN (option K95) ... 206
4.9.35 NAMUR terminal block (option B00) ... 218
4.9.36 Separate 24 V DC power supply for NAMUR (option B02) ... 220
4.9.37 Outgoing section for external auxiliary equipment for NAMUR (option B03) ... 220

5 Commissioning ... 221

5.1 Chapter content ... 221

5.2 STARTER commissioning tool ... 222
5.2.1 Installing the STARTER commissioning tool ... 224
5.2.2 Layout of the STARTER user interface ... 224

5.3 Procedure for commissioning via STARTER ... 225
5.3.1 Creating a project ... 225
5.3.2 Configuring the drive unit ... 233
5.3.3 Transferring the drive project ... 262
5.3.4 Commissioning with STARTER via Ethernet ... 264

5.4 The AOP30 operator panel ... 270

5.5 First commissioning with the AOP30 ... 271
5.5.1 First commissioning ... 271
5.5.2 Basic commissioning ... 273

5.6 Status after commissioning ... 282

5.7 Commissioning an encoder with gear factor ... 283

5.8 Parameter reset to factory settings ... 283

6 Operation ... 285

6.1 Chapter content ... 285

6.2 General information about command and setpoint sources ... 286

6.3 Basic information about the drive system ... 287
6.3.1 Parameters ... 287
6.3.2 Drive objects ... 290

6.3.3 Data sets ... 291
6.3.4 BICO technology: Interconnecting signals ... 297
6.3.5 Propagation of faults ... 303

6.4 Command sources ... 304
6.4.1 "Profidrive" default setting ... 304
6.4.2 "TM31 terminals" default setting ... 306
6.4.3 "NAMUR" default setting ... 308
6.4.4 "PROFIdrive NAMUR" default setting ... 310

6.5 Setpoint sources ... 312
6.5.1 Analog inputs ... 312
6.5.2 Motorized potentiometer ... 314
6.5.3 Fixed speed setpoints ... 315

6.6 Control via the operator panel ... 317
6.6.1 Operator panel (AOP30) overview and menu structure ... 317
6.6.2 Menu: Operation screen ... 319
6.6.3 Menu: Parameterization ... 320
6.6.4 Menu: Fault/alarm memory ... 321
6.6.5 Menu: Commissioning / service ... 322
6.6.5.1 Drive commissioning ... 322
6.6.5.2 Device commissioning ... 323
6.6.5.3 Drive diagnostics ... 323
6.6.5.4 AOP settings ... 325
6.6.5.5 AOP diagnostics ... 333
6.6.6 Sprachauswahl/Language selection ... 335
6.6.7 Operation via the operator panel (LOCAL mode) ... 335
6.6.7.1 LOCAL/REMOTE key ... 335
6.6.7.2 ON key / OFF key ... 336
6.6.7.3 Switching between clockwise and counter-clockwise rotation ... 337
6.6.7.4 Jog ... 337
6.6.7.5 Increase setpoint / decrease setpoint ... 337
6.6.7.6 AOP setpoint ... 338
6.6.7.7 Lock AOP LOCAL mode ... 339
6.6.7.8 Acknowledge error from the AOP ... 339
6.6.7.9 CDS setting via AOP ... 339
6.6.7.10 Operator input inhibit / parameterization inhibit ... 340
6.6.8 Faults and alarms ... 341
6.6.9 Saving the parameters permanently ... 343
6.6.10 Parameterization errors ... 343

6.7 Communication according to PROFIdrive ... 344
6.7.1 General information ... 344
6.7.2 Application classes ... 346
6.7.3 Cyclic communication ... 348
6.7.3.1 Telegrams and process data ... 349
6.7.3.2 Structure of the telegrams ... 351
6.7.3.3 Overview of control words and setpoints ... 352
6.7.3.4 Overview of status words and actual values ... 353
6.7.4 Acyclic communication ... 353
6.7.4.1 Structure of requests and responses ... 355
6.7.4.2 Determining the drive object numbers ... 361
6.7.4.3 Example 1: Reading parameters ... 361

6.7.4.4 Example 2: Writing parameters (multi-parameter request) ... 363
6.7.5 Diagnostics channels ... 367
6.7.5.1 Diagnostics via PROFINET ... 368
6.7.5.2 Diagnostics via PROFIBUS ... 370
6.7.6 Further information about PROFIdrive communication ... 374

6.8 Communication via PROFIBUS DP ... 375
6.8.1 PROFIBUS connection ... 375
6.8.2 General information about PROFIBUS DP ... 379
6.8.2.1 General information about PROFIBUS DP for SINAMICS ... 379
6.8.2.2 Sequence of DOs in the telegram ... 381
6.8.3 Control via PROFIBUS ... 382
6.8.4 Monitoring: Telegram failure ... 384
6.8.5 Creating an S150 in SIMATIC Manager ... 386
6.8.6 Further information about communication via PROFIBUS DP ... 388

6.9 Communication via PROFINET IO ... 389
6.9.1 Activating online operation: STARTER via PROFINET IO ... 389
6.9.2 General information about PROFINET IO ... 393
6.9.2.1 General information about PROFINET IO for SINAMICS ... 393
6.9.2.2 Real-time (RT) and isochronous real-time (IRT) communication ... 394
6.9.2.3 Addresses ... 395
6.9.2.4 Dynamic IP address assignment ... 398
6.9.2.5 DCP flashing ... 399
6.9.2.6 Data transmission ... 400
6.9.2.7 Communication channels ... 401
6.9.3 Communication with CBE20 ... 402
6.9.3.1 Selecting the CBE20 firmware ... 402
6.9.3.2 EtherNet/IP ... 403
6.9.4 PROFINET media redundancy ... 403
6.9.5 PROFINET system redundancy ... 404
6.9.5.1 Overview ... 404
6.9.5.2 Design, configuring and diagnostics ... 405
6.9.5.3 Faults, alarms and parameters ... 406
6.9.6 PROFIenergy ... 407
6.9.6.1 Description ... 407
6.9.6.2 Tasks of PROFIenergy ... 408
6.9.6.3 PROFIenergy commands ... 409
6.9.6.4 PROFIenergy measured values ... 411
6.9.6.5 PROFIenergy energy-saving mode ... 411
6.9.6.6 PROFIenergy inhibit and pause time ... 412
6.9.6.7 Function diagrams and parameters ... 412
6.9.7 Support of I&M data sets 1...4 ... 413
6.9.8 Further information about communication via PROFINET IO ... 414

6.10 Communication via SINAMICS Link ... 415
6.10.1 Basic principles of SINAMICS Link ... 415
6.10.2 Topology ... 417
6.10.3 Configuring and commissioning ... 418
6.10.4 Example ... 423
6.10.5 Communication failure when booting or in cyclic operation ... 425
6.10.6 Transmission times for SINAMICS Link ... 426
6.10.7 Function diagrams and parameters ... 427

6.11 Communication via EtherNet/IP ... 428
6.11.1 Overview ... 428
6.11.2 Connect drive device to Ethernet/IP ... 428
6.11.3 Configuring communication ... 430
6.11.4 Supported objects ... 431
6.11.5 Integrate the drive device into the Ethernet network via DHCP ... 441
6.11.6 Parameters, faults and alarms ... 442

6.12 Communication via MODBUS TCP ... 444
6.12.1 Overview ... 444
6.12.2 Configuring Modbus TCP via interface X150 ... 445
6.12.3 Configuring Modbus TCP via interface X1400 ... 446
6.12.4 Mapping tables ... 447
6.12.5 Write and read access using function codes ... 450
6.12.6 Communication via data set 47 ... 452
6.12.6.1 Communication details ... 453
6.12.6.2 Examples: Read parameters ... 454
6.12.6.3 Examples: Write parameter ... 455
6.12.7 Communication procedure ... 456
6.12.8 Parameters, faults and alarms ... 457

6.13 Communication services and used port numbers ... 458

6.14 Parallel operation of communication interfaces ... 460

6.15 Engineering Software Drive Control Chart (DCC) ... 464

7 Setpoint channel and closed-loop control ... 465

7.1 Content of this chapter ... 465

7.2 Setpoint channel ... 466
7.2.1 Setpoint addition ... 466
7.2.2 Direction reversal ... 467
7.2.3 Skip frequency bands and minimum speed ... 468
7.2.4 Speed limitation ... 469
7.2.5 Ramp-function generator ... 470

7.3 V/f control ... 474
7.3.1 Voltage boost ... 477
7.3.2 Resonance damping ... 480
7.3.3 Slip compensation ... 481

7.4 Vector speed/torque control with/without encoder ... 483
7.4.1 Vector control without encoder ... 484
7.4.2 Vector control with encoder ... 491
7.4.3 Actual speed value filter ... 492
7.4.4 Speed controller ... 493
7.4.4.1 Examples of speed controller settings ... 495
7.4.4.2 Speed controller pre-control (integrated pre-control with balancing) ... 497
7.4.4.3 Reference model ... 499
7.4.4.4 Speed controller adaptation ... 500
7.4.4.5 Droop Function ... 503
7.4.4.6 Open actual speed value ... 504
7.4.5 Closed-loop torque control ... 506
7.4.6 Torque limiting ... 509
7.4.7 Current setpoint filters ... 510

7.4.8 Current controller adaptation ... 511
7.4.9 Permanent-field synchronous motors ... 512

8 Output terminals ... 517

8.1 Content of this chapter ... 517

8.2 Analog outputs ... 518
8.2.1 Lists of signals for the analog outputs ... 519

8.3 Digital outputs ... 522

9 Functions, monitoring, and protective functions ... 525

9.1 Chapter content ... 525

9.2 Active Infeed functions ... 526
9.2.1 Line and DC link identification ... 526
9.2.2 Harmonics controller ... 527
9.2.3 Variable power factor (reactive power compensation) ... 528
9.2.4 Settings for the infeed (Active Infeed) under difficult line conditions ... 529

9.3 Drive functions ... 531
9.3.1 Motor data identification and automatic speed controller optimization ... 531
9.3.1.1 Motor data identification ... 532
9.3.1.2 Rotating measurement and speed controller optimization ... 536
9.3.1.3 Shortened rotating measurement ... 538
9.3.1.4 Parameters ... 539
9.3.2 Efficiency optimization ... 539
9.3.2.1 Description ... 539
9.3.2.2 Simple efficiency optimization (method 1) ... 540
9.3.2.3 Advanced efficiency optimization (method 2) ... 541
9.3.2.4 Function diagrams, parameters ... 541
9.3.3 Fast magnetization for induction motors ... 542
9.3.4 Vdc control ... 545
9.3.5 Automatic restart function ... 549
9.3.6 Flying restart ... 552
9.3.6.1 Flying restart without encoder ... 554
9.3.6.2 Flying restart with encoder ... 557
9.3.6.3 Parameters ... 558
9.3.7 Checking for a short-circuit/ground fault at a motor ... 559
9.3.8 Motor changeover/selection ... 560
9.3.8.1 Description ... 560
9.3.8.2 Example of changing over between two motors ... 560
9.3.8.3 Function diagram ... 562
9.3.8.4 Parameters ... 562
9.3.9 Friction characteristic curve ... 563
9.3.10 Armature short-circuit braking, DC braking ... 565
9.3.10.1 General ... 565
9.3.10.2 External armature short-circuit braking ... 565
9.3.10.3 Internal armature short-circuit braking ... 567
9.3.10.4 DC braking ... 568
9.3.11 Increasing the output frequency ... 571
9.3.11.1 Description ... 571
9.3.11.2 Default pulse frequencies ... 572
9.3.11.3 Increasing the pulse frequency ... 572

9.3.11.4 Maximum output frequency achieved by increasing the pulse frequency ... 573
9.3.11.5 Parameters ... 573
9.3.12 Derating behavior at increased pulse frequency ... 574
9.3.13 Pulse frequency wobbling ... 575
9.3.14 Runtime (operating hours counter) ... 577
9.3.15 Simulation operation ... 578
9.3.16 Direction reversal ... 580
9.3.17 Unit changeover ... 581
9.3.18 Simple brake control ... 583
9.3.19 Synchronization ... 586
9.3.20 Energy saving indicator for pumps, fans, and compressors ... 587
9.3.21 Write protection ... 590
9.3.22 Know-how protection ... 592
9.3.22.1 Description ... 592
9.3.22.2 Activating know-how protection ... 595
9.3.22.3 Deactivating know-how protection ... 596
9.3.22.4 Changing the know-how protection password ... 597
9.3.22.5 OEM exception list ... 597
9.3.22.6 Loading data with know-how protection into the file system ... 598
9.3.22.7 Overview of important parameters ... 601
9.3.23 Essential service mode ... 601
9.3.24 Web server ... 606
9.3.24.1 Description ... 606
9.3.24.2 Starting the web server ... 616
9.3.24.3 Web server configuration ... 620
9.3.24.4 Additional information ... 622
9.3.25 Tolerant encoder monitoring ... 623
9.3.25.1 General information ... 623
9.3.25.2 Encoder track monitoring ... 624
9.3.25.3 Zero mark tolerance ... 625
9.3.25.4 Freezing the actual speed for dn/dt errors ... 625
9.3.25.5 Adjustable hardware filter ... 626
9.3.25.6 Edge evaluation of the zero mark ... 627
9.3.25.7 Signal edge evaluation (1x, 4x) ... 628
9.3.25.8 Setting the measuring time to evaluate speed "0" ... 628
9.3.25.9 Sliding averaging of the speed actual value ... 629
9.3.25.10 Rotor position adaptation ... 629
9.3.25.11 Pulse number correction for faults ... 630
9.3.25.12 "Tolerance band pulse number" monitoring ... 631
9.3.25.13 Troubleshooting, causes and remedies ... 632
9.3.25.14 Tolerance window and correction ... 634
9.3.25.15 Dependencies ... 634
9.3.25.16 Overview of important parameters ... 636
9.3.26 Position tracking ... 637
9.3.26.1 General information ... 637
9.3.26.2 Measuring gearbox ... 638

9.4 Extended functions ... 642
9.4.1 Technology controller ... 642
9.4.2 Bypass function ... 645
9.4.2.1 Bypass with synchronizer with degree of overlapping (p1260 = 1) ... 647
9.4.2.2 Bypass with synchronizer without degree of overlapping (p1260 = 2) ... 650
9.4.2.3 Bypass without synchronizer (p1260 = 3) ... 652

9.4.2.4 Function diagram ... 654
9.4.2.5 Parameters ... 654
9.4.3 Extended brake control ... 655
9.4.4 Extended monitoring functions ... 660
9.4.5 Moment of inertia estimator ... 662
9.4.6 Closed-loop position control ... 668
9.4.6.1 Actual position value preparation ... 669
9.4.6.2 Position controller ... 679
9.4.6.3 Monitoring functions ... 680
9.4.6.4 Measuring probe evaluation and reference mark search ... 682
9.4.7 Basic positioner ... 684
9.4.7.1 Mechanical system ... 686
9.4.7.2 Limitations ... 688
9.4.7.3 Basic positioner and safe setpoint velocity limitation ... 694
9.4.7.4 Referencing ... 695
9.4.7.5 Referencing with several zero marks per revolution ... 706
9.4.7.6 Safely referencing under EPOS ... 709
9.4.7.7 Traversing blocks ... 712
9.4.7.8 Traversing to fixed stop ... 718
9.4.7.9 Direct setpoint specification (MDI) ... 721
9.4.7.10 Jog ... 724
9.4.7.11 Status signals ... 724
9.4.8 Parameterizable bandstop filters for the active infeed ... 727
9.4.9 Active phase failure detection ... 728

9.5 Monitoring and protective functions ... 729
9.5.1 Protecting power components ... 729
9.5.2 Thermal monitoring and overload responses ... 730
9.5.3 Blocking protection ... 733
9.5.4 Stall protection (only for vector control) ... 734
9.5.5 Thermal motor protection ... 735
9.5.5.1 Description ... 735
9.5.5.2 Temperature sensor connection at the customer terminal block TM31 (option G60) ... 735
9.5.5.3 Temperature sensor connection to a Sensor Module (options K46, K48, K50) ... 736
9.5.5.4 Temperature sensor connection directly at the Control Interface Module ... 737
9.5.5.5 Temperature sensor evaluation ... 738
9.5.5.6 Thermal motor models ... 739
9.5.5.7 Function diagram ... 743
9.5.5.8 Parameters ... 743
9.5.6 Temperature measurement via TM150 (option G51) ... 744
9.5.6.1 Description ... 744
9.5.6.2 Measurement with up to 6 channels ... 746
9.5.6.3 Measurement with up to 12 channels ... 746
9.5.6.4 Forming groups of temperature sensors ... 747
9.5.6.5 Evaluating temperature channels ... 748
9.5.6.6 Function diagram ... 749
9.5.6.7 Parameter ... 750

10 Diagnosis / faults and alarms ... 751

10.1 Chapter content ... 751

10.2 Diagnosis ... 752
10.2.1 Diagnostics via LEDs ... 752

10.2.2 Diagnostics via parameters ... 762
10.2.3 Indicating and rectifying faults ... 766

10.3 Overview of warnings and faults ... 767
10.3.1 "External alarm 1" ... 767
10.3.2 "External fault 1" ... 768
10.3.3 "External fault 2" ... 768
10.3.4 "External fault 3" ... 769

11 Maintenance and servicing ... 771

11.1 Chapter content ... 771

11.2 Maintenance ... 772
11.2.1 Cleaning ... 772

11.3 Maintenance ... 772
11.3.1 Installation device ... 774
11.3.2 Using crane lifting lugs to transport power blocks ... 775

11.4 Replacing components ... 777
11.4.1 Replacing the filter mats ... 777
11.4.2 Replacing the Control Interface Module, frame size FX ... 778
11.4.3 Replacing the Control Interface Module, frame size GX ... 780
11.4.4 Replacing the Control Interface Module, frame size HX ... 782
11.4.5 Replacing the Control Interface Module, frame size JX ... 784
11.4.6 Replacing the power block (frame size FX) ... 786
11.4.7 Replacing the power block (frame size GX) ... 788
11.4.8 Replacing the power block (frame size HX) ... 790
11.4.9 Replacing the power block (frame size JX) ... 794
11.4.10 Replacing the fan (frame size FX) ... 796
11.4.11 Replacing the fan (frame size GX) ... 798
11.4.12 Replacing the fan (frame size HX) ... 800
11.4.13 Replacing the fan (frame size JX) ... 804
11.4.14 Replacing the fan in the Active Interface Module (frame size FI) ... 806
11.4.15 Replacing the fan in the Active Interface Module (frame size GI) ... 808
11.4.16 Replacing the fan in the Active Interface Module (frame size HI) ... 810
11.4.17 Replacing the fan in the Active Interface Module (frame size JI) ... 812
11.4.18 Replacing the DC fuses in the Active Line Module, Motor Module, frame size HX ... 814
11.4.19 Replacing the DC fuses in the Active Line Module, Motor Module, frame size JX ... 817
11.4.20 Replacing cylindrical fuses ... 819
11.4.21 Replacing the LV HRC fuses ... 820
11.4.22 Replacing the cabinet operator panel ... 822
11.4.23 Replacing the Backup Battery for the Cabinet Operator Panel ... 822

11.5 Forming the DC link capacitors ... 824

11.6 Messages after replacing DRIVE-CLiQ components ... 825

11.7 Upgrading the cabinet unit firmware ... 826

11.8 Loading the new operator panel firmware from the PC. ... 827

12 Technical specifications ... 829

12.1 Chapter content ... 829

12.2 General technical specifications ... 830
12.2.1 Derating data ... 831

12.2.1.1 Current derating as a function of the ambient temperature 831
12.2.1.2 Installation altitudes between 2000 m and 5000 m above sea level 832
12.2.1.3 Current derating as a function of the pulse frequency..... 834
12.2.2 Overload capability 835

12.3 Technical specifications 837
12.3.1 Cabinet units, 380 V ... 480 V 3 AC..... 838
12.3.2 Cabinet units, 500 ... 690 V 3 AC..... 846

A Appendix 859

A.1 Environmental compatibility 859

A.2 List of abbreviations..... 859

A.3 Parameter macros..... 868

Index..... 879

Safety information 1

1.1 General safety instructions

⚠ WARNING

Electric shock and danger to life due to other energy sources

Touching live components can result in death or serious injury.

- Only work on electrical equipment if you are appropriately qualified.
- Always observe the country-specific safety rules for all work.

Generally, the following steps apply when establishing safety:

1. Prepare for disconnection. Notify all those who will be affected by the procedure.
2. Isolate the drive system from the power supply and take measures to prevent it being switched back on again.
3. Wait until the discharge time specified on the warning labels has elapsed.
4. Check that there is no voltage between any of the power connections, and between any of the power connections and the protective conductor connection.
5. Check that every auxiliary circuit is de-energized.
6. Ensure that the motors cannot move.
7. Identify all other dangerous energy sources, e.g. compressed air, hydraulic systems or water. Switch the energy sources to a safe state.
8. Check that the correct drive system is completely locked.

After you have completed the work, restore the operational readiness by following the above steps in the reverse order.

⚠ WARNING

Electric shock if there is no ground connection

For missing or incorrectly implemented protective conductor connection for devices with protection class I, high voltages can be present at open, exposed parts, which when touched, can result in death or severe injury.

- Ground the device in compliance with the applicable regulations.

WARNING

Electric shock due to connection to an unsuitable power supply

When equipment is connected to an unsuitable power supply, exposed components may carry a hazardous voltage that might result in serious injury or death.

- Only use power supplies that provide SELV (Safety Extra Low Voltage) or PELV (Protective Extra Low Voltage) output voltages for all connections and terminals of the electronics modules.

WARNING

Electric shock due to equipment damage

Improper handling may cause damage to equipment. For damaged devices, hazardous voltages can be present at the enclosure or at exposed components; if touched, this can result in death or severe injury.

- Ensure compliance with the limit values specified in the technical data during transport, storage and operation.
- Do not use any damaged devices.

WARNING

Electric shock due to unconnected cable shield

Hazardous touch voltages can occur through capacitive cross-coupling due to unconnected cable shields.

- Connect cable shields and unused conductors of power cables (e.g. brake conductors) at least on one side to the grounded housing potential.

WARNING

Arcing when a plug connection is opened during operation

Opening a plug connection when a system is in operation can result in arcing that may cause serious injury or death.

- Only open plug connections when the equipment is in a voltage-free state, unless it has been explicitly stated that they can be opened in operation.

WARNING

Electric shock due to residual charges in power components

Because of the capacitors, a hazardous voltage is present for up to 5 minutes after the power supply has been switched off. Contact with live parts can result in death or serious injury.

- Wait for 5 minutes before you check that the unit really is in a no-voltage condition and start work.

NOTICE

Damage to equipment due to unsuitable tightening tools.

Unsuitable tightening tools or fastening methods can damage the screws of the equipment.

- Be sure to only use screwdrivers which exactly match the heads of the screws.
- Tighten the screws with the torque specified in the technical documentation.
- Use a torque wrench or a mechanical precision nut runner with a dynamic torque sensor and speed limitation system.

NOTICE

Property damage due to loose power connections

Insufficient tightening torques or vibration can result in loose power connections. This can result in damage due to fire, device defects or malfunctions.

- Tighten all power connections to the prescribed torque.
- Check all power connections at regular intervals, particularly after equipment has been transported.

WARNING

Spread of fire from built-in devices

In the event of fire outbreak, the enclosures of built-in devices cannot prevent the escape of fire and smoke. This can result in serious personal injury or property damage.

- Install built-in units in a suitable metal cabinet in such a way that personnel are protected against fire and smoke, or take other appropriate measures to protect personnel.
- Ensure that smoke can only escape via controlled and monitored paths.

WARNING

Active implant malfunctions due to electromagnetic fields

Converters generate electromagnetic fields (EMF) during operation. Electromagnetic fields may interfere with active implants, e.g. pacemakers. People with active implants in the immediate vicinity of systems are at risk.

- As the operator of an EMF-emitting installation, assess the individual risks of persons with active implants.
- Observe the data on EMF emission provided in the product documentation.

WARNING

Unexpected movement of machines caused by radio devices or mobile phones

Using radio devices or mobile telephones in the immediate vicinity of the components can result in equipment malfunction. Malfunctions may impair the functional safety of machines and can therefore put people in danger or lead to property damage.

- Therefore, if you move closer than 20 cm to the components, be sure to switch off radio devices or mobile telephones.
- Use the "SIEMENS Industry Online Support App" only on equipment that has already been switched off.

WARNING

Damage to motor insulation due to excessive voltages

When operated on systems with grounded line conductor or in the event of a ground fault in the IT line system, the motor insulation can be damaged by the higher voltage to ground. If you use motors that have insulation that is not designed for operation with grounded line conductors, you must perform the following measures:

- IT system: Use a ground fault monitor and eliminate the fault as quickly as possible.
- TN or TT systems with grounded line conductor: Use an isolating transformer on the line side.

WARNING

Fire due to inadequate ventilation clearances

Inadequate ventilation clearances can cause overheating of components with subsequent fire and smoke. This can cause severe injury or even death. This can also result in increased downtime and reduced service lives for devices/systems.

- Ensure compliance with the specified minimum clearance as ventilation clearance for the respective component.

WARNING

Unrecognized dangers due to missing or illegible warning labels

Dangers might not be recognized if warning labels are missing or illegible. Unrecognized dangers may cause accidents resulting in serious injury or death.

- Check that the warning labels are complete based on the documentation.
- Attach any missing warning labels to the components, where necessary in the national language.
- Replace illegible warning labels.

NOTICE

Device damage caused by incorrect voltage/insulation tests

Incorrect voltage/insulation tests can damage the device.

- Before carrying out a voltage/insulation check of the system/machine, disconnect the devices as all converters and motors have been subject to a high-voltage test by the manufacturer, and therefore it is not necessary to perform an additional test within the system/machine.

CAUTION

Injuries at places that are difficult to access

There is risk of injury when working at locations that are difficult to access. For example, sharp edges and splinters can cause injuries to the head and skin.

- Use suitable personal protective equipment, for example gloves.

CAUTION

Hot component surfaces

Certain components (e.g. the heat sink and reactor) can become very hot during operation. These components can remain hot for a long time after operation. Contact can result in serious injury, such as skin burns.

- Do not touch hot components, even after you have switched off the device.

WARNING

Unexpected movement of machines caused by inactive safety functions

Inactive or non-adapted safety functions can trigger unexpected machine movements that may result in serious injury or death.

- Observe the information in the appropriate product documentation before commissioning.
- Carry out a safety inspection for functions relevant to safety on the entire system, including all safety-related components.
- Ensure that the safety functions used in your drives and automation tasks are adjusted and activated through appropriate parameterizing.
- Perform a function test.
- Only put your plant into live operation once you have absolutely guaranteed that the functions relevant to safety are operating correctly.

Note

Important safety notices for Safety Integrated functions

If you want to use Safety Integrated functions, you must observe the safety notices in the Safety Integrated manuals.

1.2 Handling the AOP30 backup battery

⚠ WARNING

Risk of explosion and release of harmful substances

Improper handling of lithium batteries can result in an explosion of the batteries.

Explosion of the batteries and the released pollutants can cause severe physical injury.

Note the following points when handling lithium batteries:

- Replace used batteries in good time; see the chapter "Replacing the backup battery".
- Only replace the lithium battery with an identical battery or with a type recommended by the manufacturer.
- Do not throw lithium batteries into a fire, do not recharge, do not open, do not short-circuit, do not reverse the polarity, do not heat above 100 °C and protect from direct sunlight, moisture and condensation.

1.3 Handling electrostatic sensitive devices (ESD)

Electrostatic sensitive devices (ESD) are individual components, integrated circuits, modules or devices that may be damaged by either electric fields or electrostatic discharge.

NOTICE

Damage through electric fields or electrostatic discharge

Electric fields or electrostatic discharge can cause malfunctions through damaged individual components, integrated circuits, modules or devices.

- Only pack, store, transport and send electronic components, modules or devices in their original packaging or in other suitable materials, e.g conductive foam rubber of aluminum foil.
- Only touch components, modules and devices when you are grounded by one of the following methods:
  - Wearing an ESD wrist strap
  - Wearing ESD shoes or ESD grounding straps in ESD areas with conductive flooring
- Only place electronic components, modules or devices on conductive surfaces (table with ESD surface, conductive ESD foam, ESD packaging, ESD transport container).

The necessary ESD protective measures are clearly illustrated in the following diagram:

- a = conductive floor surface
- b = ESD table
- c = ESD shoes
- d = ESD overall
- e = ESD wristband
- f = cabinet ground connection
- g = contact with conductive flooring

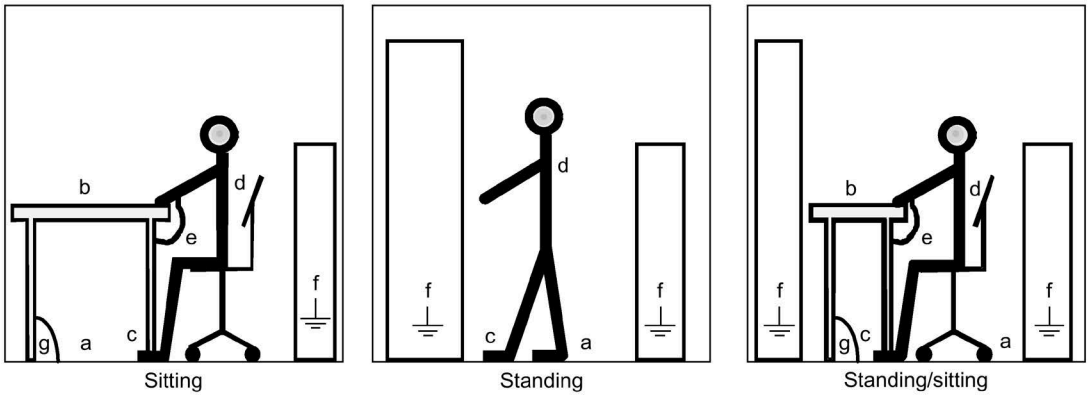

Figure 1-1 ESD protective measures

1.4 Industrial security

Siemens provides products and solutions with Industrial Security functions that support the secure operation of plants, systems, machines and networks.

In order to protect plants, systems, machines and networks against cyber threats, it is necessary to implement – and continuously maintain – a holistic, state-of-the-art Industrial Security concept. Siemens products and solutions form part of such a concept.

Customers are responsible for preventing unauthorized access to their plants, systems, machines and networks. Such systems, machines and components should only be connected to an enterprise network or the Internet if and to the extent such a connection is necessary and only when appropriate security measures (e.g. using firewalls and/or network segmentation) are in place.

For additional information on Industrial Security measures that can be implemented, please visit:
Industrial Security (http://www.siemens.com/industrialsecurity).

Siemens' products and solutions undergo continuous development to make them more secure. Siemens expressly recommends that product updates be applied as soon as they become available, and that only the latest product versions be used. Use of product versions that are no longer supported, and failure to apply latest updates may increase customer's exposure to cyber threats.

To stay informed about product updates, subscribe to the Siemens Industrial Security RSS Feed at:
Siemens Industrial Security RSS feed
(https://new.siemens.com/global/en/products/services/cert.html#Subscriptions).

Additional information is provided on the Internet:
Industrial security Configuration Manual
(https://support.industry.siemens.com/cs/ww/en/view/108862708)

⚠ WARNING

Unsafe operating states resulting from software manipulation

Software manipulations, e.g. viruses, Trojans, or worms, can cause unsafe operating states in your system that may lead to death, serious injury, and property damage.

- Keep the software up to date.
- Incorporate the automation and drive components into a holistic, state-of-the-art industrial security concept for the installation or machine.
- Make sure that you include all installed products into the holistic industrial security concept.
- Protect files stored on exchangeable storage media from malicious software by applying suitable protection measures, e.g. virus scanners.
- Carefully check all security-related settings once commissioning has been completed.

1.5 Residual risks of power drive systems

When assessing the machine or system-related risk in accordance with the respective local regulations (e.g. EC Machinery Directive), the machine manufacturer or system installer must take into account the following residual risks emanating from the control and drive components of a drive system:

1. Unintentional movements of the driven machine or system components during commissioning, operation, maintenance, and repairs caused by, for example:
   - Hardware and/or software errors in the sensors, control system, actuators and connection system
   - Response times of the controller and drive
   - Operation and/or environmental conditions outside the specifications
   - Condensation/conductive pollution
   - Parameterization, programming, cabling, and installation errors
   - Use of wireless devices/mobile phones in the immediate vicinity of electronic components
   - External influences/damage
   - X-ray, ionizing radiation and cosmic radiation
2. Unusually high temperatures, including open flames, as well as the emission of light, noise, particles, gases, etc., can occur inside and outside the components under fault conditions caused by, for example:
   - Component malfunctions
   - Software errors
   - Operation and/or environmental conditions outside the specifications
   - External influences/damage
3. Hazardous shock voltages caused by, for example:
   - Component malfunctions
   - Influence of electrostatic charging
   - Induction of voltages in moving motors
   - Operation and/or environmental conditions outside the specifications
   - Condensation/conductive pollution
   - External influences/damage
4. Electrical, magnetic and electromagnetic fields generated in operation that can pose a risk to people with a pacemaker, implants or metal replacement joints, etc., if they are too close
5. Release of environmental pollutants or emissions as a result of improper operation of the system and/or failure to dispose of components safely and correctly
6. Influence of network-connected communication systems, e.g. ripple-control transmitters or data communication via the network.

For more information about residual risks of the components in a drive system, see the relevant sections in the technical user documentation.

Device overview

2

2.1 Chapter content

This chapter provides information on the following:

- Introduction to the cabinet units
- The main components and features of the cabinet unit
- The cabinet unit wiring
- Explanation of the type plate

2.2 Applications, features

2.2.1 Applications

SINAMICS S150 drive converter cabinet units are used for variable-speed drives with exacting demands regarding performance, and include drives with:

- High dynamic requirements
- Frequent braking cycles and high braking energy
- Four-quadrant operation

Typical applications for SINAMICS S150 include:

- Test bay drives
- Centrifuges
- Elevators and cranes
- Paper and rolling mill drives
- Cross cutters and shears
- Conveyor belts
- Presses
- Cable winches

2.2.2 Features, quality, service

Features

The self-commutating, pulsed infeed/feedback unit, which is based on IGBT technology and is equipped with a clean-power filter, makes the minimum of demands on the line – and is very line friendly:

- The innovative clean-power filter minimizes line-side harmonics
- The total harmonic distortion factors of current THD(I) and voltage THD(U) at the rated current are typically in the range of 3 %. THD(I) is calculated according to IEEE 519 (2014) and THD(U) according to IEC 61000-2-4 (2002). The stringent limit values of IEEE 519 (2014) are typically complied with.
- Power feedback (four-quadrant operation)
- Tolerant vis-à-vis fluctuations in the supply voltage
- Operation on weak lines
- Reactive power compensation is possible (inductive or capacitive)
- High drive dynamics

In addition, factors have been considered to ensure easy handling of the drive from the planning and design phase through to operation. These factors include:

- Compact, modular, service-friendly design
- Straightforward planning/design and commissioning using the SIZER and STARTER tools
- Ready to connect to facilitate the installation process
- Quick, menu-driven commissioning with no complex parameterization
- Clear and convenient drive monitoring/diagnostics, commissioning and operation via a user-friendly graphic operator panel with measured values displayed in plain text or in a quasi-analog bar display.
- SINAMICS is an integral part of Totally Integrated Automation (TIA). The TIA concept offers an optimized range of products for automation and drive technology. This concept is characterized by planning / design, communication, and data management procedures that are consistent throughout the product range. SINAMICS is fully integrated in the TIA concept.
  Separate S7/PCS7 blocks and faceplates for WinCC are available.
- Integration in SIMATIC H systems is possible via a Y link.
- Drive Control Chart (DCC)
  Drive Control Chart (DCC) expands the possibility of very simply configuring technological functions for the SINAMICS drive system.
  The block library encompasses a large selection of closed-loop, arithmetic and logic function blocks, as well as more comprehensive open-loop and closed-loop control functions. The user-friendly DCC editor enables easy graphical configuration and a clear representation of control loop structures as well as a high degree of reusability of existing diagrams. DCC is an add-on to the STARTER commissioning tool.

Quality

SINAMICS S150 NEMA converter cabinet units are manufactured to meet high standards of quality and exacting demands.

This results in a high level of reliability, availability, and functionality for our products.

The development, design, and manufacturing processes, as well as order processing and the logistics supply center have been certified to DIN ISO 9001 by an independent authority.

Service

Our worldwide sales and service network offers our customers consulting services tailored to their needs, provides support with planning and design, and offers a range of training courses.

Contact information and the current link to our website can be found in the preface.

2.3 Structure

The SINAMICS S150 drive converter cabinet units are characterized by their compact, modular, and service-friendly design.

Line and motor-side components as well as additional monitoring devices can be installed in the converter cabinet units.

A wide range of electrical and mechanical components enable the drive system to be optimized in line with prevailing requirements.

The cabinet unit comprises up to two cabinet panels with a total width of between 1400 mm and 2800 mm, depending on the output.

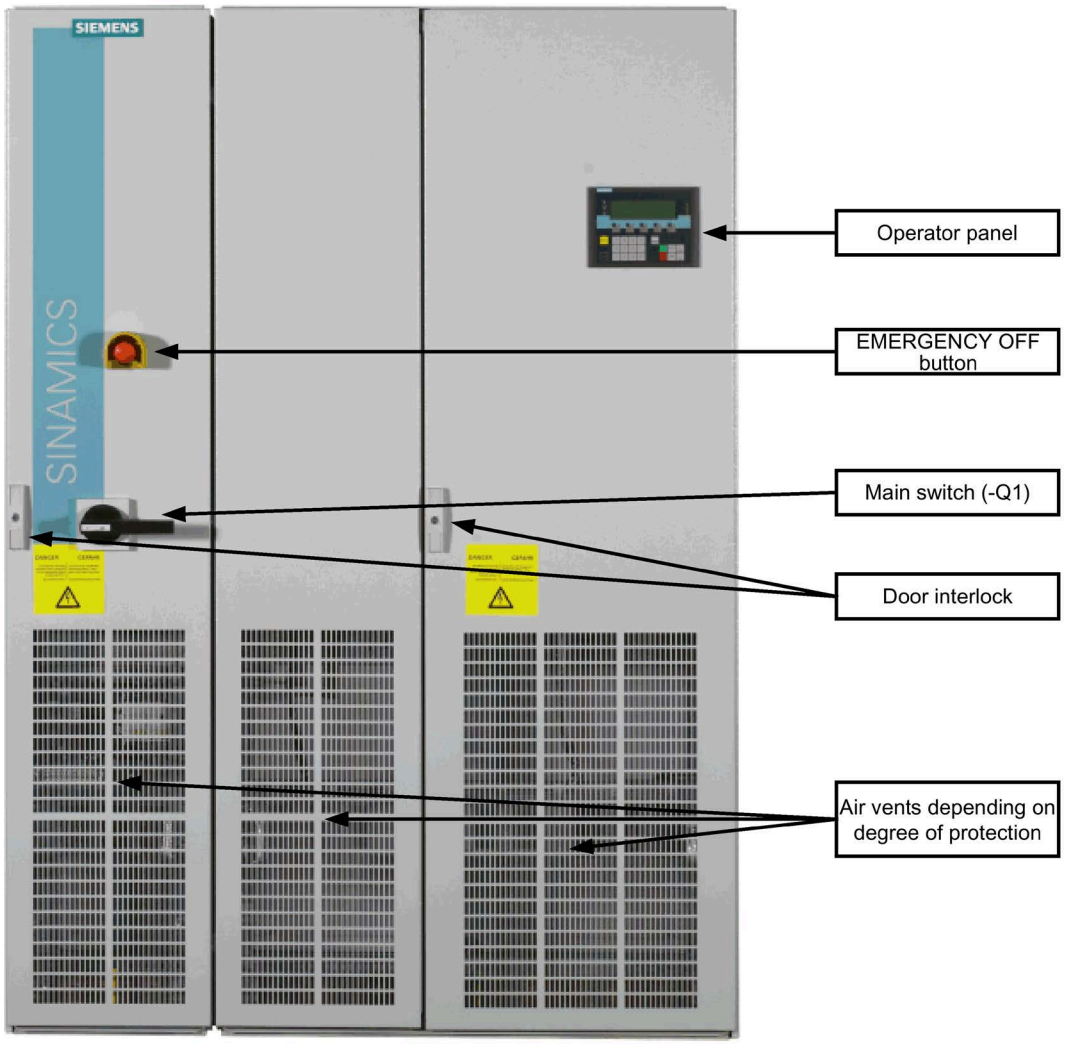

Figure 2-1 Example of the cabinet drive (e.g., 132 kW, 400 V 3 AC) - (layout and components shown may vary according to version)

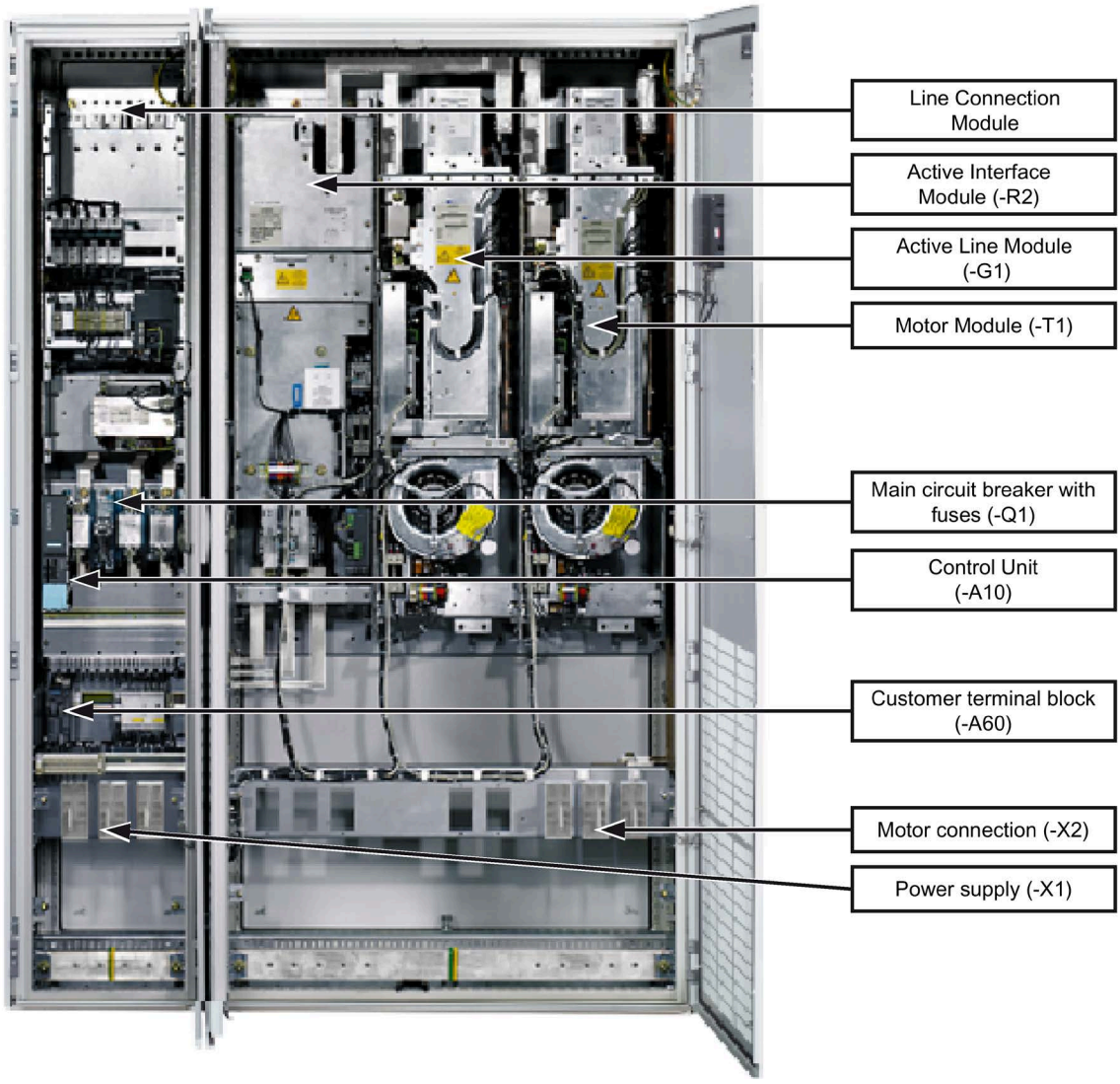

Figure 2-2 Example of the cabinet drive (e.g., 132 kW, 400 V 3 AC) - (layout and components shown may vary according to version)

2.4 Wiring principle

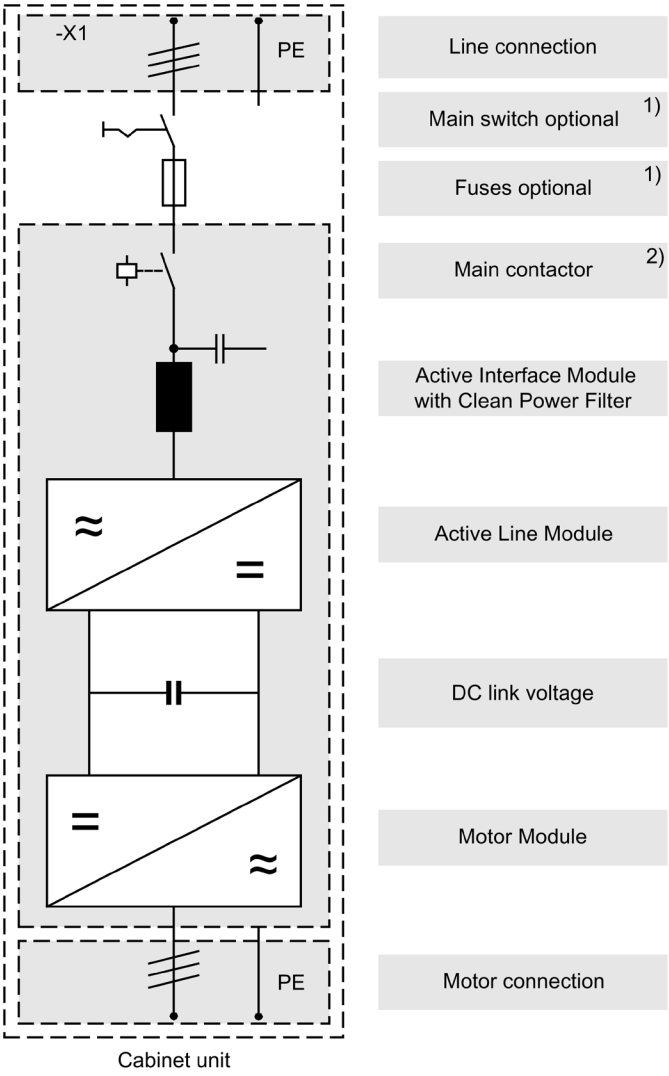

1) Main switch with fuses only for rated output current < 800 A

2) Main contactor for rated output current < 800 A or circuit breaker for rated output current > 800 A included in standard.

Figure 2-3 Wiring principle of the cabinet unit

Note

PE connection of the motor

The PE connection at the motor must be fed back directly to the cabinet unit.

2.5 Type plate

Specifications on the type plate

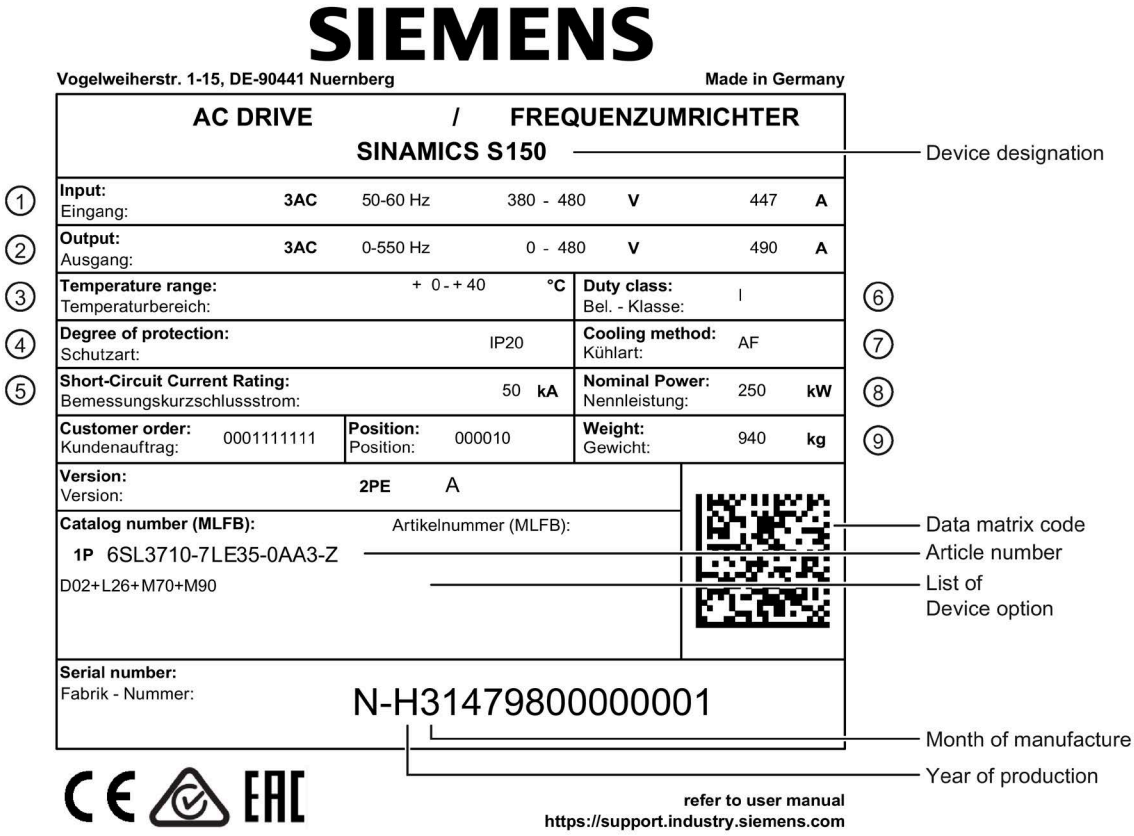

Figure 2-4 Type plate for the cabinet unit (example)

Type plate specifications (from type plate above)

Position	Specification	Value	Explanation
①	Input	3 AC 50 - 60 Hz 380 - 480 V 447 A	Three-phase current connection Line frequency Rated input voltage Rated input current
②	Output	3 AC 0 - 550 Hz 0 - 480 V 490 A	Three-phase current connection Output frequency Rated output voltage Rated output current
③	Temperature range	+0 - +40 °C	Ambient temperature range within which the enclosed drive can operate under 100 % load
④	Degree of protection	IP20	Degree of protection
⑤	Short-circuit current rating	50 kA	Rated short-circuit current
⑥	Duty class load class	I	I: Duty class I to EN 60146-1-1 = 100 % (continuously) (with the specified current values, the cabinet unit can operate continuously under 100 % load)
⑦	Cooling method	AF	A: Cooling medium: air F: Circulation method: forced cooling, drive unit (fan) in the device
⑧	Nominal power	250 kW	Rated power
⑨	Weight	940 kg	Weight of the enclosed drive

Data matrix code

The data matrix code contains the specific data of the device. This code can be read-in with any Smartphone, and technical information for the appropriate device can be displayed via the "Industry Online Support" Mobile App.

Additional information on the "Industry Online Support" App is available in the Preface (Page 3).

Date of manufacture

The date of manufacture can be determined as follows:

Table 2- 1 Production year and month

Letter/number	Year of manufacture		Letter/number	Month of manufacture
A	2010		1 ... 9	January to September
B	2011		O	October
C	2012		N	November
D	2013		D	December
E	2014			
F	2015			
H	2016			
J	2017			
K	2018			
L	2019			
M	2020			
N	2021			
P	2022			
R	2023			

Explanation of the option short codes

Table 2- 2 Explanation of the option short codes

Line-side options	
L00	Line filter for use in the first environment according to EN 61800-3, category C2 (TN/TT systems with grounded neutral point)
L04	Infeed module rated one level lower
L21	Surge suppression
L26	Main switch incl. fuses for output currents < 800 A
Motor-side options	
L07	dv/dt filter compact plus Voltage Peak Limiter
L08	Motor reactor
L10	dv/dt filter plus Voltage Peak Limiter
L15	Sine-wave filter (only for 380 ... 480 V 3 AC up to 250 kW)
Line-side and motor-side options	
M70	EMC shield bus
Motor protection and safety functions	
L45	EMERGENCY OFF pushbutton installed in the cabinet door
L57	EMERGENCY OFF category 0, 230 VAC or 24 VDC
L59	EMERGENCY STOP category 1, 230 VAC
L60	EMERGENCY STOP category 1, 24 VDC
L83	Thermistor motor protection unit (alarm)
L84	Thermistor motor protection unit (shutdown)
L86	PT100 evaluation unit

L87	Insulation monitoring
M60	Additional shock protection
Increase in degree of protection	
M21	Degree of protection IP21
M23	Degree of protection IP23
M43	Degree of protection IP43
M54	Degree of protection IP54
Mechanical options	
M06	Base 100 mm high, RAL 9005
M07	Cable compartment 200 mm high, RAL 7035
M13	Line connection from above
M78	Motor connection from above
M90	Crane transport assembly (top-mounted)
Safety Integrated	
K01	Safety license for 1 axis
K52	Additional SMC30 Sensor Module
K82	Terminal Module for controlling the "Safe Torque Off" and "Safe Stop 1" safety functions
K87	TM54F Terminal Module
K88	SBA Safe Brake Adapter 230 VAC
Other options	
G20	CBC10 Communication Board
G33	CBE20 Communication Board
G51	TM150 Temperature Sensor Module
G60	TM31 customer terminal block
G61	Additional TM31 customer terminal block
G62	TB30 Terminal Board
K46	SMC10 Sensor Module Cabinet-Mounted
K48	SMC20 Sensor Module Cabinet-Mounted
K50	SMC30 Sensor Module Cabinet-Mounted
K51	VSM10 Voltage Sensing Module Cabinet-Mounted
K95	CU320-2 PN Control Unit
L19	Connection for external auxiliary equipment
L40	Line filter monitoring
L50	Cabinet lighting with service socket
L55	Cabinet anti-condensation heating
L61	Braking unit 25 kW / 125 kW (380 ... 480 V, 660 ... 690 V)
L62	Braking unit 50 kW / 250 kW (380 ... 480 V, 660 ... 690 V)
L64	Braking unit 25 kW / 125 kW (500 ... 600 V)
L65	Braking unit 50 kW / 250 kW (500 ... 600 V)
Y09	Special paint finish for cabinet
Documentation (standard: English / German)	
D02	Customer documentation (circuit diagram, terminal diagram, layout diagram) in DXF format
D04	Customer documentation as hard copy
D14	Draft of customer documentation
D56	Documentation in Russian
D58	Documentation in: English / French
D60	Documentation in: English / Spanish

D72	Documentation in Italian
D74	Documentation in: English/German
D76	Documentation in English
D77	Documentation in French
D78	Documentation in Spanish
D80	Documentation in: English / Italian
D84	Documentation in Chinese
D91	Documentation in: English / Chinese
D93	Documentation in: English/Portuguese (Brazil)
D94	Documentation in: English / Russian
Languages (standard: English / German)	
T58	Type plate data in English / French
T60	Type plate data in English / Spanish
T80	Type plate data in English / Italian
T83	Type plate data in English/Portuguese (Brazil)
T85	Type plate data in English / Russian
T91	Type plate data in English / Chinese
Industry-specific options (chemicals)	
B00	NAMUR terminal block
B02	Protective separation for 24 V supply (PELV)
B03	Outgoing section for external auxiliary equipment (uncontrolled)
Options specific to the shipbuilding industry	
M66	Marine version
E21	Individual certificate from Lloyds Register (LR)
E31	Individual certificate from Bureau Veritas (BV)
E51	Individual certificate from DNV GL
E61	Individual certificate from American Bureau of Shipping (ABS)
E71	Individual certificate from China Classification Society (CCS)
Converter acceptances (not shown on the type plate)	
F03	Visual acceptance
F71	Function test with no motor connected (with the customer present)
F72	Function test with no motor connected (without the customer present)
F74	Function test with test bay motor (without the customer present)
F75	Function test with test bay motor (with the customer present)
F76	Insulation test (without the customer present)
F77	Insulation test (with the customer present)
F97	Customer-specific acceptance inspections (on request)

Mechanical installation 3

3.1 Chapter content

This chapter provides information on the following:

- The conditions for transporting, storing, and installing the cabinet unit
- Preparing and installing the cabinet unit

3.2 Transportation and storage

Transport

⚠ WARNING

Incorrectly transporting the device

The unit can tip over if you transport it incorrectly – or if you use transport equipment that is not permitted for the purpose. Death, serious injury, or material damage can result.

- Ensure that only trained personnel transport the device with approved transport equipment and lifting tools.
- Observe the center of gravity specifications. A label or stamp is attached to each transportation unit and precisely shows the center of gravity of the cabinet.
- Transport the unit only in the original marked upright position. Do not tilt the device or allow it to fall.
- The forks of the truck must protrude at the rear of the transport pallet. The floor panels of the transport units cannot be loaded or stressed.

⚠ WARNING

Using forklift trucks that are not approved

If the forks are too short, this can cause the transport unit/cabinet to tip over resulting in death, serious injury or damage to the cabinet.

- The forks of the truck must protrude at the rear of the transport pallet. The floor panels of the transport units cannot be loaded or stressed.
- Only use fork-lift trucks approved for this purpose to transport the units.

Note

Notes regarding transportation

- The devices are packaged by the manufacturer in accordance with the climatic conditions and stress encountered during transit and in the recipient country.
- The notes on the packaging for transportation, storage, and proper handling must be observed.
- For transportation using forklifts, the devices must be set down on a wooden pallet.
- When the devices are unpacked, they can be transported using the optional transport eyebolts (option M90) or rails on the cabinet unit. The load must be distributed evenly. Heavy blows or impacts must be avoided during transit and when the devices are being set down, for example.
- Shock / tilt indicators are affixed to the packaging to detect unacceptable impact or tilting of the cabinet unit during transport (see Chapter "Transport Indicators").
- Permissible ambient temperatures:
  Air cooling: -25 to +70 °C, Class 2K3 acc. to EN 60721-3-2:1997
  Briefly up to -40 °C for max. 24 hours

Note

Notes regarding damage in transit

- Carry out a thorough visual inspection of the device before accepting the delivery from the transportation company. Pay special attention to transport damage that is not readily apparent but indicated by the tilt and shock indicators.
- Ensure that you have received all the items specified on the delivery note.
- Notify the transportation company immediately of any missing components or damage.
- If you identify any hidden defects or damage, contact the transportation company immediately and ask them to examine the device.
- If you fail to contact them immediately, you may lose your right to claim compensation for the defects and damage.
- If necessary, you can request the support of your local Siemens office.

Storage

The devices must be stored in clean, dry rooms. Temperatures between -25° C and +55 °C are permissible (class 1K4 according to EN 60721-3-1:1997). Temperature variations greater than 20 K per hour are not permitted.

If the cabinet unit is stored for a prolonged period once it has been unpacked, cover it or take other appropriate measures to ensure that it does not become dirty and that it is protected against environmental influences. If such measures are not taken, the warranty becomes invalid in the event of a claim for damages.

NOTICE

Material damage to the canopies caused by impermissible mechanical loading

The separately delivered canopies may be damaged if they are subjected to mechanical loads before being installed on the cabinets.

- Do not apply any mechanical loads to the canopies.

3.3 Installation

⚠ WARNING

Failure to observe general safety instructions and residual risks

If the general safety instructions and remaining risks are not observed, accidents can occur involving severe injuries or death.

- Observe the general safety instructions.
- When assessing the risk, take into account residual risks.

Protection against the spread of fire

The device may be operated only in closed housings or in control cabinets with protective covers that are closed, and when all of the protective devices are used. The installation of the device in a metal control cabinet or the protection with another equivalent measure must prevent the spread of fire and emissions outside the control cabinet.

Protection against condensation or electrically conductive contamination

Protect the device, e.g. by installing it in a control cabinet with degree of protection IP54 according to IEC 60529 or NEMA 12. Further measures may be necessary for particularly critical operating conditions.

If condensation or conductive pollution can be excluded at the installation site, a lower degree of control cabinet protection is permitted.

3.3.1 Mechanical installation: checklist

Use the following checklist to guide you through the mechanical installation procedure for the cabinet unit. Read the "Safety instructions" section at the start of these Operating Instructions before you start working on the device.

Note

Checking the checklist

Check the boxes accordingly in the right-hand column if the activity applies to the cabinet unit in your scope of supply. In the same way, check the boxes once you have finished the installation procedure to confirm that the activities are complete.

Item	Activity	Yes	Completed
1	Check the shipping and handling monitors prior to assembly. Refer to "Mechanical installation/Assembly/Preparatory steps/Shipping and handling monitors".	☐	☐
2	The ambient conditions must be permissible. See "Technical data/General technical data". The cabinet unit must be firmly attached to the fixing points provided. The cooling air can flow unobstructed.	☐	☐
3	The minimum ceiling height (for unhindered air outlet) specified in the Operating Instructions must be observed. The cooling air supply must be not be obstructed (see "Mechanical installation/preparation").	☐	☐
4	Transport units separately shipped must be connected to one another (refer to "Mechanical installation/Mechanical connection of transport units that are shipped separately").		
5	Components that are supplied separately for transport reasons (drip plate or canopy) must be fitted (see "Mechanical installation/Fitting additional drip plates (option M21) or canopies (option M23/M43/M54)").	☐	☐
6	The clearance around an open door (escape route) specified in the applicable accident prevention guidelines must be observed.	☐	☐
7	With option M13/M78: Select the required metric screw glands or PG glands based on the cable cross-section and drill the required holes in the mounting plates. When the cable is fed in from above, ensure that enough room is available if the cable has to be bent because of the cable feeder and cross-sections. The cable entries should be fed in vertically to minimize transverse forces on the entries (see "Mechanical installation / line connection from above (option M13), motor connection from above (option M78)").	☐	☐

3.3.2 Preparation

3.3.2.1 Requirements on the installation location

The cabinet units are designed for installation in closed, electrical operating areas in compliance with EN 61800-5-1. A closed electrical operating area is a room or area containing electrical equipment that can be accessed by trained personnel only. Access is controlled by a door or other form of barrier that can be opened only by means of a key or other tool. The room or area is also clearly marked with appropriate warning notices.

The operating areas must be dry and free of dust. The air supplied must not contain any electrically conductive gas, vapors, or dust, which could impair operation. It may be necessary to filter the air supplied to the room where the equipment is installed. If the air contains dust, filter mats (option M54) can be installed in front of the ventilation grills of the cabinet doors and also in front of the optional canopies. Option M54 offers additional protection against water sprayed against the housing from any direction and corresponds to degree of protection IP54.

The permissible values for climatic ambient conditions must be taken into account.

At temperatures > 40 °C (104 °F) or altitudes > 2000 m, derating is required.

The basic version of the cabinet units complies with the IP20 degree of protection in accordance with EN 60529.

Installation is realized in accordance with the dimension drawings supplied. The clearance between the top of the cabinet and the ceiling is also specified in the dimension drawings.

The cooling air for the power unit is drawn in from the front through the ventilation grills in the lower part of the cabinet doors. The hot air is discharged through the perforated top cover or the ventilation grilles in the top cover (with option M13/M23/M43/M54/M78). Cooling air can also be supplied from below through intermediate floors, air ducts, etc. To allow this, openings must be made in the 3-section bottom panel or individual bottom panels must be removed.

According to EN 61800-3, the cabinet units are not intended for use in low-voltage public line supplies that supply residential buildings. High-frequency interference can be expected if it is used in this type of line supply.
Additional measures (e.g. line filter, option L00) can be fitted for use in the first environment according to EN 61800-3 Category C2.

Note

Radio service interference due to high frequency (radio frequency) disturbances

The converter can cause high frequency disturbances, which may make interference suppression measures necessary.

This device is not designed for general use in the first environment (residential area) and must not be used there without appropriate radio interference suppression measures.

- Have the installation and commissioning with appropriate radio interference suppression measures preformed by qualified personnel.

3.3.2.2 Requirements on the levelness of the floor

The foundation at the installation location must be horizontal and level, to ensure proper functioning of the cabinet units.

- Care must be taken to ensure that the doors can be opened and closed and that the locking systems work properly.
- Flat sections (such as doors, side panels and canopies) must be sealed correctly to ensure compliance with the specified degree of protection.
- When cabinets are connected (e.g. transport units), air must be prevented from entering through the gaps.

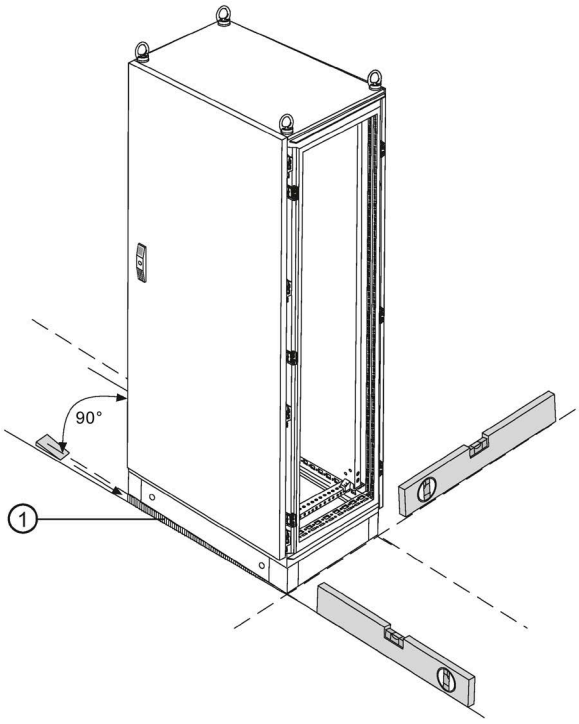

Figure 3-1 Requirements on the levelness of the floor

The following requirements must be met to ensure the full functionality of the cabinet units:

- The foundation must be level and horizontal.
- Irregularities must be leveled out.
- Gaps where air can enter, created when aligning (e.g.: ① in the diagram) must be closed.

3.3.2.3 Shipping and handling monitors

The cabinet units are equipped with tilt and shock indicators to monitor for damage during transit.

Figure 3-2 Tilt indicator

Figure 3-3 Shock indicator

Position of the shipping and handling monitors

The tilt indicators are affixed to the top of the cabinet unit inside the doors.

The shock indicators are affixed to the bottom of the cabinet unit inside the doors.

Checking the shipping and handling monitors prior to commissioning

It is essential to check the shipping and handling monitors prior to commissioning the converter.

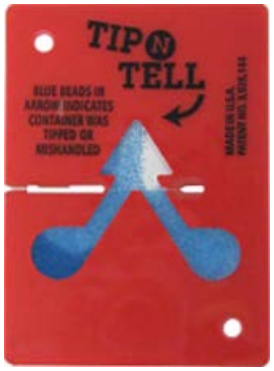

Figure 3-4 Tilt indicator tripped

The tilt indicator provides immediate visible evidence of whether the cabinet units have been handled and stored upright. Blue-colored quartz sand begins to flow into the arrow-shaped indicator area. The tilt indicator has tripped when the blue color extends beyond the middle line of the arrowhead.

Figure 3-5 Shock indicator tripped

The shock indicator shows if an acceleration has exceeded 98.1 m/s^2 (10 x g) and indicates the direction of acceleration. The black color of the arrows indicates that an impermissible shock load has occurred in the direction of the arrow.

⚠ WARNING

Damage to the device when shock or tilt indicators are tripped

If a shock or tilt indicator has tripped, safe operation of the device cannot be guaranteed.

Death, serious injury, or material damage can result.

- Terminate the commissioning if one of the shock or tilt indicators has tripped.
- Contact Technical Support immediately for clarification.

Removing the shipping and handling monitors prior to commissioning

NOTICE
Material damage caused by transport indicators remaining in the device during operation If transport indicators remain in the device during operation, material damage can result from falling off or through temperature damage. • Remove the transport indicators before commissioning the converter.

Ethyl alcohol can be used to remove any remains of adhesive after removing the transport indicators from the control cabinet.

3.3.2.4 Unpacking

Check the delivery against the delivery note to ensure that all the items have been delivered. Check that the cabinet is intact and has not been damaged.

The packaging material must be disposed of in accordance with the applicable country-specific guidelines and rules.

3.3.2.5 Required tools

You require the following tools for installation:

- Standard set of tools with screwdrivers, screw wrenches, socket wrenches, etc.
- Torque wrenches 1.5 Nm to 100 Nm
- 600 mm extension for socket wrenches

3.3.3 Installation

3.3.3.1 Lifting the cabinet off the transport pallet

Lifting the cabinet off the transport pallet

The applicable local guidelines regarding the transportation of the cabinet from the transport palette to the installation location must be observed.

A crane transport assembly (option M90) can also be fitted on the top of the cabinet.

The fixing screws of the transport pallets can be removed without having to lift the cabinet unit. The positions of the fixing screws are indicated by red markings on the outside of the pallets.

Figure 3-6 Lifting from the transport pallet (left: without base; right: with base)

For cabinet units without base (in the figure on the left), the fixing screws of the transport pallets must be removed from the underside of the pallet.
For cabinet units with base (in the figure on the right), the fixing screws of the transport pallet are accessible only after the cover is opened. They can then be loosened and removed directly from the front.

⚠ WARNING

Failure to observe the weight and the center of gravity

The non-observance of restrictions concerning the weight and the center of gravity can cause death or severe injury during lifting and transport activities.

- The weight specified on the packaging and the designated center of gravity must always be taken into account when the cabinet is lifted and transported.
- This potential hazard must be taken into account particularly once you have unscrewed the cabinet units from the transport pallet.

Center of gravity of the cabinet

The diagram below shows the center of gravity of the cabinet (for all sizes), which must always be taken into account when lifting and installing the cabinet.

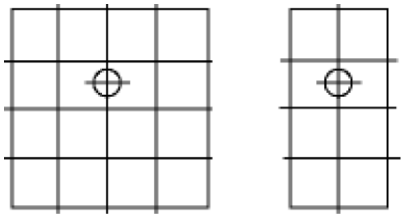

Figure 3-7 Center of gravity of the cabinet

Note

Center of gravity of the cabinet

A label with the precise position of the center of gravity of the cabinet is attached to each cabinet or each transport unit.

3.3.3.2 Removing the crane transport aids

With option M90 (crane transport aids), the cabinet units are equipped with either transport eyebolts or beams.

Figure 3-8 Option M90, transport beams

Removal

The transport eyebolts can be unscrewed and removed. Depending on the length of the cabinet or transport unit, the support rails can have a varying number of fastening screws. These must be unscrewed and removed before the rails can be removed.

⚠ WARNING

Incorrect handling of the mounting rails

The improper handling of heavy carrying rails during disassembly can cause injuries or material damage.

- Ensure careful handling of the carrying rails during disassembly.
- Prevent screws from falling into the unit during disassembly and so causing damage during operation.

Original roof screws

Figure 3-9 Original roof screws, accessory kit

After removing the crane transport aids, the removed transport eyebolts or the fixing screws of the transport beam must be replaced by the original roof screws from the accessories pack supplied in order to ensure compliance with the degree of protection and proper grounding of the cabinet.

Figure 3-10 Delivery state (left), original roof screws (right)

3.3.3.3 Connection to the foundation

Connection to the foundation

Four holes for M12 screws are provided on each cabinet panel to secure the cabinet to the foundation. The fixing dimensions are specified in the dimension drawings.

Every cabinet panel must be attached to the ground using at least two opposing attachment points (1 screw each in the front and rear part of the cabinet panel).
If this is not possible for reasons of accessibility, then the attachment points of the adjacent cabinet panels must be correspondingly raised.
Generally, as many attachment points as possible should be used.

3.3.4 Connecting separately shipped transport units

Description

An accessories kit is provided with each transport unit for mechanically connecting the sub-cabinet units. The table below shows the content of this accessories kit for connecting the cabinet units.

Table 3- 1 Content of the accessories kit for connecting the cabinet units

Quantity	Material	Fig.	Notes
1 x	Sealing strip		The sealing strip must be attached to the cabinets before connecting them together.
3 x	Outer cabinet connectors including Mounting material		The cabinet connector is fitted and screwed on from the outside. Tightening torque: 9 Nm
3 x	Inner cabinet connectors including Mounting material		The cabinet connector is fastened with 4 screws. Tightening torque: 5 Nm

Mounting

1. Attach the sealing strip to the cabinet frames of the cabinets to be connected.
2. Push the cabinets together, they must completely come together at the front and the rear sides. The distance between the cabinets must be approximately 3 mm.
3. Mount the cabinet connectors at the outside and inside corresponding to the following drawing.
4. If necessary, reattach the protective covers and doors. The ground connections must also be attached to the doors.

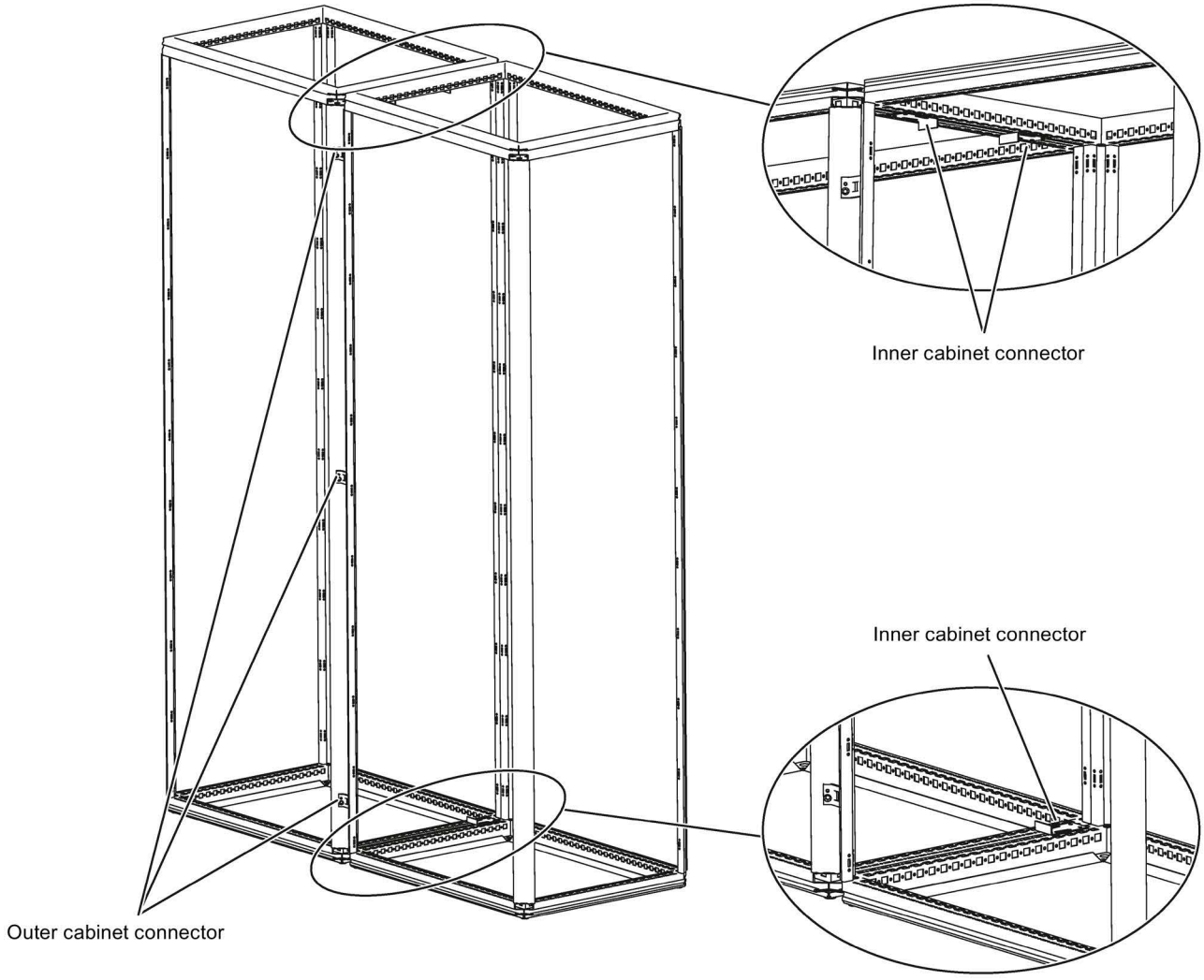

Figure 3-11 Positions of the cabinet connectors

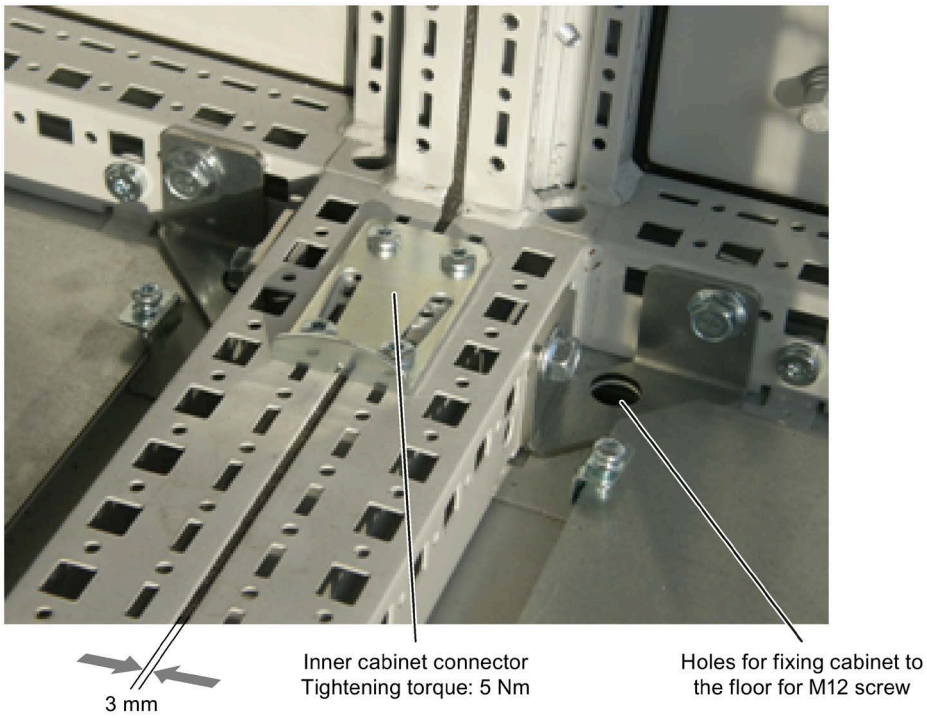

Figure 3-12 Cabinet connectors at the inside at the lower cabinet frame

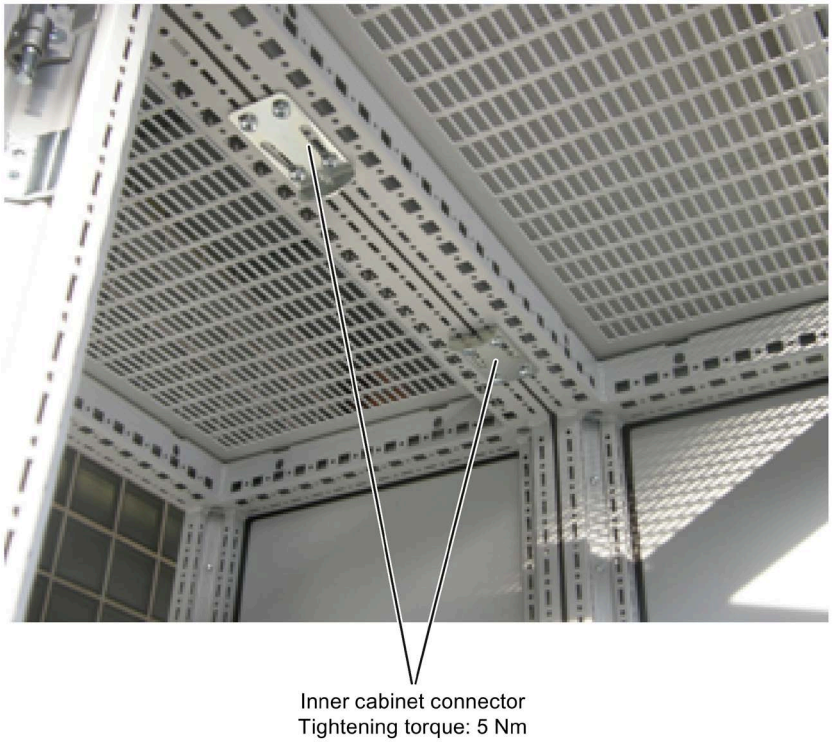

Figure 3-13 Cabinet connectors at the inside at the upper cabinet frame

Figure 3-14 Outer cabinet connector

3.3.5 Fitting additional canopies (option M21) or hoods (option M23, M43, M54)

To increase the degree of protection of the cabinets from IP20 (standard) to IP21, IP23, IP43, or IP54, additional canopies or hoods are supplied. These must be fitted once the cabinets have been installed.

Description

Degree of protection IP21

The degree of protection can be increased to IP21 by fitting an additional canopy. The canopy is mounted protruding above the cabinet on spacers, 250 mm above the top cover of the cabinet. Fitting a canopy increases the height of all cabinets by 250 mm.

Degree of protection IP23

Cabinet units with degree of protection IP23 are supplied with additional hoods, as well as plastic ventilation grilles and braided plastic in the air inlet (doors) and outlet (hoods). The hoods are flush with the cabinets at the side and front and have a recess at the rear so that air can escape even if the cabinet is wall mounted. Air escapes from the front and back. The hood is secured via the four crane hook holes in the cabinet. Hoods increase the height of the cabinet by 400 mm.

Degree of protection IP43

Cabinet units with degree of protection IP43 are supplied with additional hoods, as well as plastic ventilation grilles and close-meshed braided plastic in the air inlet (doors) and outlet (hoods). The hoods are flush with the cabinets at the side and front and have a recess at the rear so that air can escape even if the cabinet is wall mounted. Air escapes from the front and back. The hood is secured via the four crane hook holes in the cabinet. Attaching the hoods increases the height of the cabinet units by 400 mm.
Compliance with degree of protection IP43 requires an intact filter medium, which must be serviced at regular intervals depending on the prevailing ambient conditions.

Degree of protection IP54

Cabinet units with degree of protection IP54 are supplied with additional hoods, plastic ventilation grilles, and a filter medium in the air inlet (doors) and outlet (hoods). The hoods are flush with the cabinets at the side and front and have a recess at the rear so that air can escape even if the cabinet is wall mounted. Air escapes from the front and back. The hood is secured via the four crane hook holes in the cabinet. Hoods increase the height of the cabinet by 400 mm.
Compliance with degree of protection IP54 requires an intact filter medium, which must be replaced at regular intervals depending on the prevailing ambient conditions. Filters can be fitted and replaced from outside the cabinet relatively easily.

Note

Early mounting of the canopy or hood!

It is recommended to attach the canopy or hood at an early stage to prevent foreign matter entering the cabinet devices.

Attaching a canopy to increase the degree of protection to IP21 (option M21)

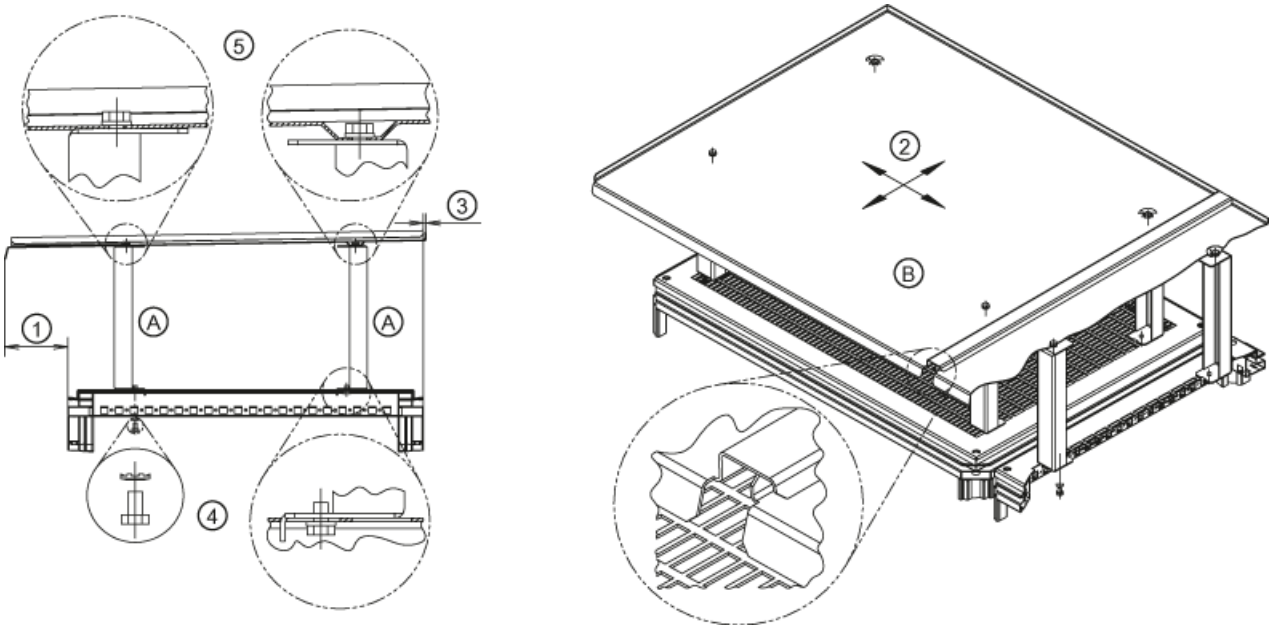

Figure 3-15 Fitting a canopy

The canopy ② can be installed variably in both directions (on the side and to the front or back) on the top of the cabinet.
The arrangement can be adapted to the various installation conditions for the cabinets. This produces an adjustable protrusion of the canopy at the front ① and rear ③.
In this way, it is possible to have a circumferential protrusion of the canopy, or direct contact with the wall or between the canopies in back-to-back installation. If necessary, the contact point with the wall or back-to-back installation must be sealed.

- Remove any existing crane transport assemblies.
- Attach the spacers (A) to the roof of the cabinet at the positions specified.
  Tighten the screws ④ with contact discs applied from the bottom through the protective guard (tightening torque: 13 Nm for M6).

Note

Mounting the protective guard

The protective guard is fastened to the cabinet unit from the top using four screws. To facilitate assembly, it may be necessary to remove the protective guard, which must be reattached on completion of assembly work.

- Mount the drip plate (B) on the spacers.
  Attach the screw ⑤ with contact washer from above through the drip plate (tightening torque: 13 Nm for M6).

Note

Installing the canopies with cabinets connected in series

There are overlaps on the sides of the canopies to prevent water dripping into the spaces between cabinets connected in series. When fitting the canopies, make sure these overlaps engage.

Fitting a hood to increase the degree of protection to IP23/IP43/IP54 (option M23/M43/M54)

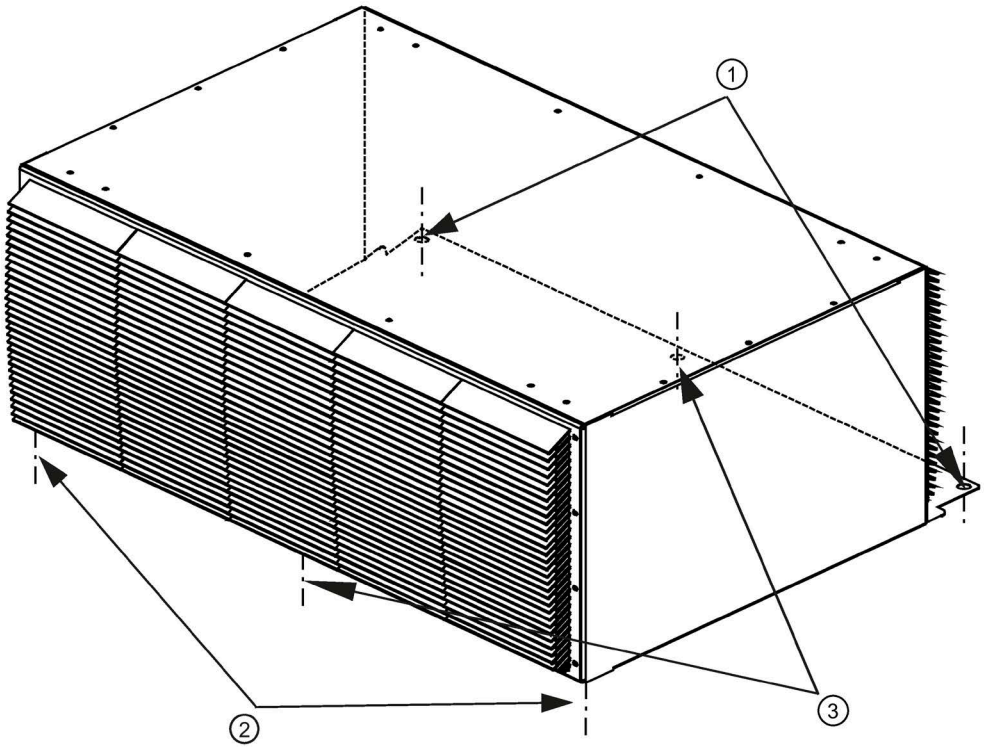

Figure 3-16 Attaching a hood

1. Remove the crane transport assembly (if fitted).
2. Make sure that a perforated top cover is not fitted on the top of the cabinet (depending on production requirements, this can be fitted at a later stage). If a top cover is installed, it must be removed.

3. Options M43 and M54 only:
   Use the sealing tape provided to attach the contact surfaces of the hood to the top of the cabinet.

Figure 3-17 Hood with attached sealing tape

4. Place the washers of the original roof screws between the cabinet upper side and the hood at the contact points of the cabinet front side. This prevents the hood from being pressed down too far when the screws are tightened and so the opening of the doors blocked.

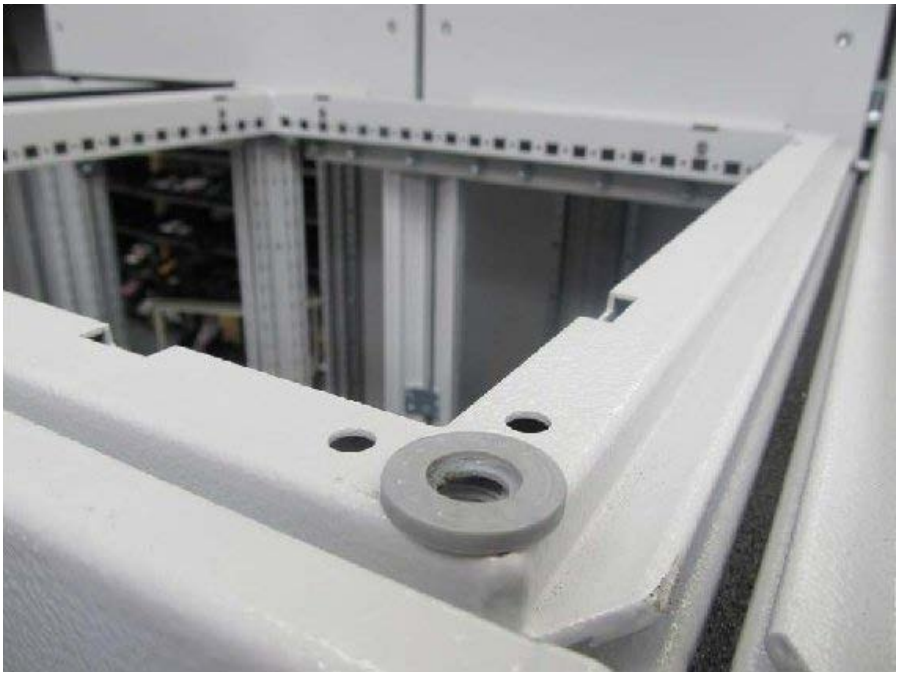

Figure 3-18 Attaching the washers

5. Attach the hood to the cabinet roof at the specified positions.
6. Attach the original M12 ① roof screws from above at the rear side.
7. Attach the M6 screws and washers at the front side (sequence: screw, spring-lock element, small washer, large washer) ② from below.
8. If the hood is very wide, insert additional screws in the center of the hood (front and rear) ③.

Figure 3-19 View with opened cabinet door

Figure 3-20 View with closed cabinet door

3.3.6 Line connection from above (option M13), motor connection from above (option M78)

Description

With options M13 and M78, the cabinet unit is equipped with an additional hood. The connection straps for the power cables, the clamping bar for mechanically securing the cables, an EMC shield bus, and a PE busbar are located within the hood.

The hood adds an extra 405 mm to the cabinet height. The busbars for connection from above are fully mounted when the system is delivered. For transport reasons, the hoods are delivered separately and must be mounted on site. With options M23, M43 and M54, plastic ventilation grilles and filter mats are also supplied.

A 5 mm aluminum mounting plate (with no holes) is fitted in the roof of the cover for feeding in the cables. Depending on the number of cables and the cross-sections used, holes for attaching cable glands for feeding in the cables must be drilled in this mounting plate on site.

Note

Connecting the control cables

The control cables and optional brake resistors are connected as before from below.

Attaching the Hood

1. Remove the crane transport assembly (if fitted).
2. Options M43 and M54 only:
   Use the sealing tape provided to attach the contact surfaces of the hood to the top of the cabinet.
3. Fit the hood to the roof of the cabinet at the positions specified (fixing points for the crane transport assembly).
4. To secure the power cables, remove the front panel of the hood.

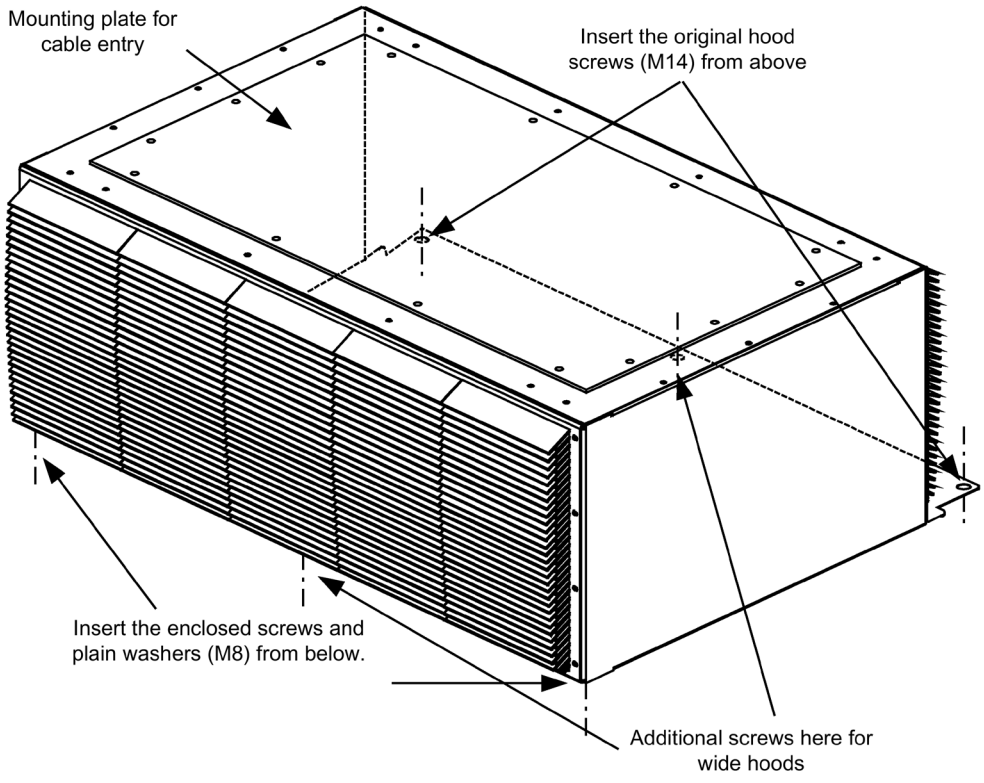

Figure 3-21 Attaching the hood with M13 / M78

Electrical installation

4

4.1 Chapter content

This chapter provides information on the following:

- Establishing the electrical connections for the cabinet unit
- Adjusting the fan voltage and the internal power supply to local conditions (supply voltage)
- The customer terminal block and its interfaces
- The interfaces for additional options

4.2 Checklist for electrical installation

The following checklist guides you through the electrical installation procedure for the cabinet unit. Read the "Safety instructions" section at the start of these Operating Instructions before you start working on the device.

Note

Checking the checklist

Check the boxes accordingly in the right-hand column if the activity applies to the cabinet unit in your scope of supply. In the same way, check the boxes once you have finished the installation procedure to confirm that the activities are complete.

Item	Activity	Yes	Completed
Power connections			
1	The line-side and motor-side power cables must be dimensioned and routed in accordance with the ambient and routing conditions. The maximum permissible cable lengths between the converter and motor must be observed depending on the type of cable used (see "Electrical installation / Power connections / Connection cross-sections and cable lengths"). The PE ground at the motor must be fed back directly to the cabinet unit. The cables must be properly connected to the cabinet unit terminals and tightened with a torque of 50 Nm. The cables for the motor and low-voltage switchgear must also be connected and tightened with the required torques.	☐	☐
2	The cables between the low-voltage switchgear and the cabinet unit must be protected with line fuses to provide adequate conductor protection (DIN VDE 100, Part 430 and/or IEC 60364-4-43). See "Technical data" for the appropriate fuses.	☐	☐
3	For strain relief, the cables must be clamped on the cable propping bar (C-type mounting bar).	☐	☐

Item	Activity		Yes	Completed
4	When EMC-shielded cables are used, screwed glands that connect the shield to ground with the greatest possible surface area must be provided on the motor terminal box. On the cabinet, the cables must be grounded with the clips supplied with the EMC shield bus with the greatest possible surface area (Shielding bus supplied with option L00 or can be ordered separately with option M70) (See chapter "Electrical installation/EMC-compliant installation").		☐	☐
5	The cable shields must be properly applied and the cabinet properly grounded at the points designated for that purpose (see "Electrical installation/EMC-compliant installation").		☐	☐
6	The voltage of the fan transformers in the Active Line Module (-G1 -T10) and in the Motor Module (-T1 -T10) and the internal power supply (-T10) must be set. Larger cabinet units have two fan transformers each in the Active Line Module and in the Motor Module (-G1-T10/-T20) and (-T10/-T20), which must be set jointly (see "Electrical installation / Power connections / Adjusting the fan voltage (-G1-T10, -T1-T10)" and "Electrical installation / Power connections / Adjusting the internal power supply (-T10)").		☐	☐
7	A yellow warning label is attached to the basic interference suppression module at each connection clip. • The warning label must be removed from the connection clip (by pulling it off) if the connection clip is to remain in the unit (operation on a grounded line supply). • The warning label must be removed together with the connection clip if the unit is operated on a non-grounded line supply (IT system). (See "Electrical installation/Power connections/Removing the connection clip to the basic interference suppression module for operation on a non-grounded line supply (IT system)").		☐	☐
8	The type plate allows you to ascertain the date of manufacture. If the period from the date of manufacture to initial commissioning or the cabinet unit downtime is less than two years, the DC-link capacitors do not have to be formed. If the unit has been non-operational for longer than two years, forming must be carried out (see "Maintenance and Servicing / forming of DC-Link Capacitors").		☐	☐
9	The circuit breaker setting must be checked for currents above 800 A. The feedback contact of the circuit breaker is wired to terminal block –X50 (see Chapter "Electrical Installation/Power connections/Setting the circuit breaker").		☐	☐
10	With an external auxiliary supply, the cable for the 230 VAC supply must be connected to terminal -X40 (see "Electrical installation / Power connections / External supply of the auxiliary supply from a secure line").		☐	☐
11	Option L07 dv/dt filter compact plus Voltage Peak Limiter	During commissioning, the filter must be selected via STARTER or AOP30. You are advised to check the selection by ensuring that p0230 is set to 2. The required parameters are set automatically (see "Electrical installation / Other connections / dv/dt filter compact plus Voltage Peak Limiter (option L07)").	☐	☐
12	Option L10 dv/dt filter plus Voltage Peak Limiter	During commissioning, the filter must be selected via STARTER or AOP30. You are advised to check the selection by ensuring that p0230 is set to 2. The required parameters are set automatically (see "Electrical installation / Other connections / dv/dt filter plus Voltage Peak Limiter (option L10)").	☐	☐
13	Option L15 Sine-wave filter	During commissioning, the filter must be selected via STARTER or AOP30. You are advised to check the selection by ensuring that p0230 is set to 3. The required parameters are set automatically (see "Electrical installation/Other connections/Sine-wave filter (option L15)").	☐	☐

Item	Activity		Yes	Completed
14	Option L19 Connection for external auxiliary equipment	To supply auxiliary equipment (e.g. separately-driven fan for motor), the drive must be properly connected to terminals -X155:1 (L1) to -X155:3 (L3). The supply voltage of the auxiliary equipment must match the input voltage of the cabinet unit. The load current must not exceed 10 A and must be set at -Q155 in accordance with the load connected (see "Electrical installation / Other connections / Connection for external auxiliary equipment (option L19)").	☐ Set value: _____	☐
15	Option L21 Surge suppression	The monitoring of the surge arresters and the upstream fuses must be connected to terminal -X700 (see "Electrical installation / other connections / overvoltage limitation (option L21)"). Point 7 must also be observed: "Before the drive is operated on a non-grounded line supply (IT system), the connecting clip to the basic interference suppression module must be removed" (see "Electrical installation/Power connections/Removing the connection clip to the basic interference suppression module for operation on non-grounded line supplies (IT systems)").	☐	☐
16	Option L26 Main switch incl. fuses/circuit breakers	For rated currents up to 800 A, a switch disconnector with externally-mounted fuses is used as the main switch. The feedback contact of the switch disconnector is wired to the terminal block –X50 (see Section "Electrical Installation/Other connections/Main switch incl. fuses or main switch (option L26)").	☐	☐
17	Option L50 Cabinet lighting with service socket	The 230 V auxiliary supply for the cabinet lighting with an integrated service socket must be connected to terminal -X390 and protected with a fuse (max. 10 A) on site (see "Electrical installation / Other connections / Cabinet lighting with service socket (option L50)").	☐	☐
18	Option L55 Cabinet anti-condensation heating	The 230 V auxiliary supply for the anti-condensation heating for the cabinet (230 V / 50 Hz, 100 W / or 230 V / 50 Hz 2 x 100 W for cabinets with a width of 800 ... 1200 mm) must be connected to terminals -X240: 1 to 3 and protected with fuses (max. 16 A) (see "Electrical installation / Other connections / Anti-condensation heating for cabinet (option L55)").	☐	☐
Signal connections				
19	Cabinet unit operation by higher-level controller / control room. The control cables must be connected in accordance with the interface assignment and the shield applied. Taking into account electrical interference and the distance from power cables, the digital and analog signals must be routed with separate cables.		☐	☐
20	Option G60 TM31 customer terminal block	The TM31 Terminal Module extends the customer terminals. This provides the following additional interfaces: • 8 digital inputs • 4 bidirectional digital inputs/outputs • 2 relay outputs with changeover contact • 2 analog inputs • 2 analog outputs • 1 temperature sensor input (KTY84-130/PTC) Integration of the interfaces takes place via pre-interconnections prepared in the factory, which can be selected during commissioning. When the analog inputs on the TM31 are used as current or voltage inputs, selectors S5.0 and S5.1 must be set accordingly (see "Electrical installation / Signal connections / Customer terminal module (-A60)").	☐	☐

Item	Activity		Yes	Completed
21	Option K46 SMC10 Sensor Module Cabinet-Mounted	The SMC10 encoder module simultaneously records the actual motor speed and the rotor position angle. The following encoders are supported by the SMC10 Sensor Module: • Resolver, 2-pin • Resolver, multi-pin. The motor temperature can also be detected using KTY84-130 or PTC thermistors (see "Electrical installation / Other connections / SMC10 Sensor Module Cabinet-Mounted (option K46)").	☐	☐
22	Option K48 SMC20 Sensor Module Cabinet-Mounted	The SMC20 encoder module simultaneously records the actual motor speed and the path angle. The following encoders are supported by the SMC20 Sensor Module: • Incremental encoder sin/cos 1Vpp • Absolute encoder EnDat The motor temperature can also be detected using KTY84-130 or PTC thermistors (see "Electrical installation / Other connections / SMC20 Sensor Module Cabinet-Mounted (option K48)").	☐	☐
23	Option K50 SMC30 Sensor Module Cabinet-Mounted	The SMC30 Sensor Module determines the actual motor speed. The following encoders are supported by the SMC30 Sensor Module: • TTL encoder • HTL encoder • SSI encoder The motor temperature can also be detected using KTY84-130 or PTC thermistors (see "Electrical installation / Other connections / SMC30 Sensor Module Cabinet-Mounted (option K50)").	☐	☐
24	Option K52 Additional SMC30 Sensor Module	For reliable actual value acquisition when using the Safety Integrated Extended Functions, the additional SMC30 Sensor Module is used (see "Electrical installation/Other connections/Additional SMC30 Sensor Module (option K52)").	☐	☐
Connecting protection and monitoring devices				
25	Option G51 TM150 temperature sensor module	The TM150 Terminal Module can be connected to a maximum of 12 temperature sensors (PT100, PT1000, KTY84, PTC, bimetallic NC contact) (see "Electrical installation/Other connections/TM150 Temperature Module (option G51)").	☐	☐
26	Option L45 EMERGENCY OFF pushbutton installed in the cabinet door	The contacts for the EMERGENCY OFF pushbutton are available at terminal -X120 and can be picked off so that they can be integrated in an on-site higher-level protection concept (see "Electrical installation / Other connections / EMERGENCY OFF pushbutton, integrated in the door of the cabinet unit (option L45)").	☐	☐
27	Option L57 EMERGENCY OFF category 0, 230 VAC or 24 VDC	EMERGENCY OFF category 0 stops the drive in an uncontrolled manner. No additional wiring is necessary when implemented in conjunction with option L45. If the cabinet unit is integrated in an external safety circuit, however, the contact must be looped in via terminal block -X120 (see "Electrical installation/Other connections/EMERGENCY OFF category 0, 230 VAC / 24 VDC (option L57)").	☐	☐

Item	Activity		Yes	Completed
28	Option L59 EMERGENCY STOP category 1, 230 VAC	EMERGENCY STOP category 1 stops the drive in a controlled manner. No additional wiring is necessary when implemented in conjunction with option L45. If the cabinet unit is integrated in an external safety circuit, however, the contact must be looped in via terminal block –X120. The timer relay at -K121 must be adapted to match system requirements (see "Electrical installation / Other connections / EMERGENCY STOP category 1, 230 VAC (option L59)").	☐	☐
29	Option L60 EMERGENCY STOP category 1, 24 VDC	EMERGENCY STOP category 1 stops the drive in a controlled manner. No additional wiring is necessary when implemented in conjunction with option L45. If the cabinet unit is integrated in an external safety circuit, however, the contact must be looped in via terminal block -X120. The timer relay at -K120 must be adapted to match system requirements (see "Electrical installation / Other connections / EMERGENCY STOP category 1, 24 VAC (option L60)").	☐	☐
30	Option L61/L62/L64/L65 Braking unit 25 kW/125 kW 50 kW/250 kW	The connecting cables and ground for the braking resistor must be connected to terminal block –X5: 1/2. The braking resistor thermostatic switch and customer terminal block –A60 or the Control Unit must be connected. When commissioning via AOP30, the settings for evaluating "external fault 3" must be made. The settings for evaluating the thermostatic switch as "external fault 2" must be made (see "Electrical installation / Other connections / braking unit 25 kW / 125 kW (option L61 / L64); braking unit 50 kW / 250 kW (option L62 / L65)").	☐	☐
31	Option L83 Thermistor motor protection device (alarm)	The PTC thermistor sensors (PTC resistor type A) must be connected to the thermistor motor protection unit -F127 at terminals T1 and T2 for alarms (see "Electrical installation / Other connections / Thermistor motor protection device (option L83/L84)").	☐	☐
32	Option L84 Thermistor motor protection device (shutdown)	The PTC thermistor sensors (PTC resistor type A) must be connected to the thermistor motor protection unit -F125 at terminals T1 and T2 for shutdown (see "Electrical installation / Other connections / Thermistor motor protection device (option L83/L84)").	☐	☐
33	Option L86 PT100 evaluation unit	The resistor thermometers must be connected to evaluation units -B140, -B141 for the PT100 evaluation. A two-wire or three-wire system can be implemented here to connect the PT100 sensors. The sensors are divided into two groups (see "Electrical installation / Other connections / PT100 evaluation unit (option L86)"). This must be taken into account for the evaluation (factory setting).	☐	☐
34	Option L87 Insulation monitoring	The insulation monitor can only be operated on a non-grounded line supply (IT system). Only one insulation monitor can be deployed in an electrically-connected network. For in-plant control, the signaling relays must be connected accordingly or, with individual drives (the cabinet unit is fed via a converter transformer assigned to the cabinet unit), integrated in the cabinet unit alarm chain (see "Electrical installation / Other connections / Insulation monitoring (option L87)"). Point 7 must also be observed: "Before the drive is operated on a non-grounded line supply (IT system), the connecting clip to the basic interference suppression module must be removed" (see "Electrical installation/Power connections/Removing the connection clip to the basic interference suppression module for operation on non-grounded line supplies (IT systems)").	☐	☐

Item	Activity		Yes	Completed
Safety Integrated				
35	Option K01 Safety license for 1 axis	A license is required for each axis with safety functions in the case of Safety Integrated Extended Functions. With Option K01, the safety license for 1 axis is contained in and activated on the compact flash card (see "Electrical installation / Other connections / Safety license for 1 axis (option K01)").	☐	☐
36	Option K82 "Safe Torque Off" and "Safe Stop 1" safety functions	The terminal block -X41 must be connected on site, the safety functions must be activated prior to use via parameter assignment, in addition an acceptance test must be performed and an acceptance report must be drawn up (see "Electrical installation / Other connections / Terminal module for activating "Safe Torque Off" and "Safe Stop 1" (option K82)").	☐	☐
37	Option K87 TM54F Terminal Module	The terminal blocks of TM54F Terminal Module must be connected line-side; the Safety Integrated Extended Functions must be activated prior to use via parameter assignment; in addition an acceptance test must be performed and an acceptance report must be drawn up (see "Electrical installation / Other connections / TM54F Terminal Module (option K87)").	☐	☐
38	Option K88 Safe Brake Adapter 230 VAC	To control the brake, a connection must be established between -X14 on the Safe Brake Adapter and the holding brake (see "Electrical installation/Other connections/Safe Brake Adapter SBA 230 V AC (option K88)").	☐	☐

Required tools

You require the following tools for the electrical installation:

- Standard set of tools with screwdrivers, screw wrenches, socket wrenches, etc.
- Torque wrenches 1.5 Nm up to 100 Nm
- 600 mm extension for socket wrenches

4.3 Important safety precautions

⚠ WARNING

Failure to observe general safety instructions and residual risks

If the general safety instructions and remaining risks are not observed, accidents can occur involving severe injuries or death.

- Observe the general safety instructions.
- When assessing the risk, take into account residual risks.

⚠ WARNING

Electric shock when using unsuitable fuses

If unsuitable fuses are used, an electric shock can cause severe injury or death.

- Use only fuses recommended in the technical data.
- Observe the necessary minimum short circuit current for the relevant fuse.

⚠ WARNING

Electric shock due to the residual charge of the DC link capacitors

Because of the DC-link capacitors, a hazardous voltage is still present for a period of time after the power supply has been switched off.

If live components are touched then this can result in severe injury or death.

- Open the unit only after the time specified on the warning label has elapsed.
- Before starting work, check the absence of voltage by measuring all poles/phases, also to ground.

NOTICE

Material damage resulting from switching on the device without forming the DC-link capacitors

After a storage time exceeding two years, switching on the device without forming the DC-link capacitors can damage it.

- Before switching on the device, it should be formed after a storage time exceeding two years, see "Maintenance and servicing".

Note

Touch protection

When the cabinet door is opened, cabinet units have touch protection in compliance with DGUV Regulation 3 according to EN 50274.

For versions that are equipped with option M60, additional protective covers are fitted. When the cabinet door is open, these provide increased protection against touching live components.

These protective covers may need to be removed during installation and connection procedures. Once work has been completed, the protective covers must be properly refitted.

4.4 Introduction to EMC

What is meant by EMC?

Electromagnetic compatibility (EMC) describes the capability of an electrical device to function satisfactorily in an electromagnetic environment without itself causing interference unacceptable for other devices in the environment.

EMC therefore represents a quality feature for the

- Internal noise immunity: Resistance to internal electrical disturbances
- External noise immunity: resistance against external electromagnetic disturbances
- Noise emission level: environmental effects caused by electromagnetic emissions

To ensure that the cabinet unit functions satisfactorily in the system, the environment subject to interference must not be neglected. For this reason, special requirements exist regarding the structure and the EMC of the system.

Operational reliability and noise immunity

In order to achieve the greatest possible operational reliability and immunity to noise of a complete system (converter, automation, drive machines etc.), measures must be taken by the converter manufacturer and the user. Only when all these measures are fulfilled can the faultless functioning of the inverter be guaranteed and the specified legal requirements (2014/30/EU) be met.

Noise emissions

Product standard EN 61800–3 describes the EMC requirements placed on "Variable-speed drive systems". It specifies requirements for inverters with operating voltages of less than 1000 V. Different environments and categories are defined depending on where the drive system is installed.

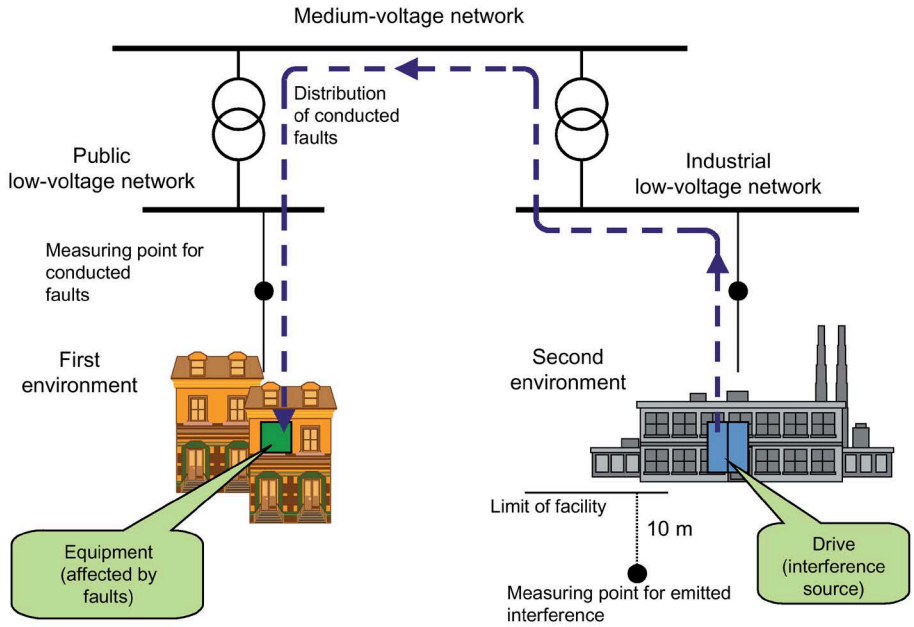

Figure 4-1 Definition of the first and second environments

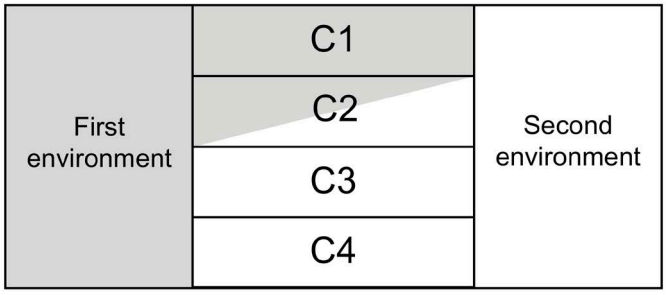

Figure 4-2 Definition of categories C1 to C4

Table 4- 1 Definition of the first and second environments

Definition of the first and second environments	
First environment	Residential buildings or locations at which the drive system is connected to a public low-voltage supply network without a transformer.
Second environment	Industrial locations supplied by a medium-voltage network via a separate transformer.

Table 4- 2 Definition of categories C1 ... C4

Definition of categories C1 ... C4	
Category C1	Rated voltage <1000 V; unrestricted use in the first environment.
Category C2	Rated voltage for stationary drive systems <1000 V; for use in the second environment. For use in the first environment only when sold and installed by skilled personnel.
Category C3	Rated voltage <1000 V; use in the second environment only.
Category C4	Rated voltage ≥1000 V or for rated currents ≥ 400 A in complex systems in the second environment.

4.5 EMC-compliant design

The following section provides some basic information and guidelines that will help you comply with the EMC and CE guidelines.

Cabinet assembly

- Connect painted or anodized metal components using toothed self-locking screws or remove the insulating layer.
- Use unpainted, de-oiled mounting plates.
- Establish a central connection between ground and the protective conductor system (ground).

Shield gaps

- Bridge shield gaps (at terminals, circuit breakers, contactors, and so on) with minimum impedance and the greatest possible surface area.

Using large cross-sections

- Use underground and grounding cables with large cross-sections or, better still, with litz wires or flexible cables.

Laying the motor supply cable separately

- The distance between the motor cable and signal cable should be > 20 cm. Do not lay signal cables and motor cables in parallel to each other.

Laying the equipotential bonding cable

- It is recommended to lay the equipotential bonding cable parallel to the control lines with a minimum cross-section of 16 mm^2.

Use anti-interference elements

- If relays, contactors, and inductive or capacitive loads are connected, the switching relays or contactors must be provided with anti-interference elements.

Cable installation

- Cables that are subject to or sensitive to interference should be laid as far apart from each other as possible.
- All cables are to be laid as close as possible to grounded enclosure parts such as mounting plates or cabinet frames. This reduces both noise radiation and interference injection.
- Reserve cores of signal and data cables must be grounded at both ends to achieve an additional shielding effect.
- Long cables should be shortened or laid in noise resistant areas to avoid additional connecting points.
- If it is impossible to avoid crossing cables, conductors or cables that carry signals of different classes must cross at right angles, especially if they carry sensitive signals that are subject to interference.
  - Class 1:
    unshielded cables for ≤ 60 V DC
    unshielded cables for ≤ 25 V AC
    shielded analog signal cables
    shielded bus and data cables
    operator panel interfaces, incremental/absolute encoder lines
  - Class 2:
    unshielded cables for > 60 VDC and ≤ 230 VDC
    unshielded cables for > 25 VAC and ≤ 230 VAC
  - Class 3:
    unshielded cables for > 230 VAC/VDC and ≤ 1000 VAC/VDC

Shield connection

- Shields must not be used to conduct electricity. In other words, they must not simultaneously act as neutral or PE conductors.
- Apply the shield so that it covers the greatest possible surface area. You can use ground clamps, ground terminals, or ground screw connections.
- Avoid extending the shield to the grounding point using a wire (pigtail) because this will reduce the effectiveness of the shield by up to 90%.
- Attach the shield to a shield bar directly after the line inlet into the cabinet. Insulate the entire shielded cable and route the shield up to the device connection, but do not connect it again.

I/O interfacing

- Create a low-impedance ground connection for additional cabinets, system components, and distributed devices with the largest possible cross-section (at least 16 mm^2).
- Ground unused lines at one end in the cabinet.

- Select the highest possible distance between the power and signal cables, with a minimum of 20 cm at the very least. The greater the distance over which the cables are routed in parallel, the greater the clearance must be. If a sufficient clearance cannot be maintained, you must install additional shields.
- Avoid unnecessarily long cable loops.

Filtering cables

- Line supply cables and power supply cables for devices and modules may have to be filtered in the cabinet to reduce incoming or outgoing disturbances.
- To reduce emissions, the device is equipped with a radio interference suppression filter as standard (in accordance with the limit values defined in category C3). Optional filters can be fitted for use in the first environment (category C2).

Protective ground conductors

- According to EN 61800-5-1, Section. 6.3.6.7, the minimum cross-section of the protective ground conductor must conform to the local safety regulations for protective ground conductors for equipment with a high leakage current.

4.6 Power connections

⚠ WARNING

Electric shock caused by interchanging or short-circuiting the device connections

Interchanging the line connections and motor connections or short-circuiting the DC-link connections will damage the device that can cause death or severe injuries.

- Do not interchange input and output terminals of the device.
- Do not interchange or short-circuit the DC-link terminals.

Note

Ground-fault circuit interrupter

The device must not be operated via a ground-fault circuit interrupter (EN 61800-5-1).

4.6.1 Cable lugs

Cable lugs

The cable connections on the devices are designed for cable lugs according to DIN 46234 or DIN 46235.

For connection of alternative cable lugs, the maximum dimensions are listed in the table below.
These cable lugs are not to exceed these dimensions, as mechanical fastening and adherence to the voltage distances is not guaranteed otherwise.

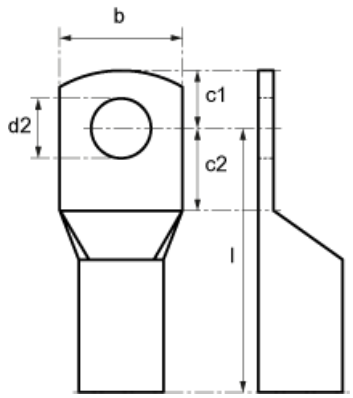

Figure 4-3 Dimensions of the cable lugs

Table 4- 3 Dimensions of the cable lugs

Screw / bolts	Connection cross-section [mm²]	d2 [mm]	b [mm]	l [mm]	c1 [mm]	c2 [mm]
M8	70	8.4	24	55	13	10
M10	185	10.5	37	82	15	12
M10	240	13	42	92	16	13
M12	95	13	28	65	16	13
M12	185	13	37	82	16	13
M12	240	13	42	92	16	13
M16	240	17	42	92	19	16

Attaching 2 cable lugs per phase

The cable lugs can be attached as shown in the following diagram if, at one connection per phase, 2 cable lugs can be connected.

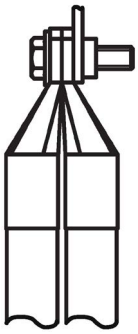

Figure 4-4 2 cable lugs per connection

4.6.2 Connection cross-sections, cable lengths

Connection cross-sections

The connection cross-sections for the line connection, motor connection, and ground connection for your device are specified in the tables provided in the "Technical specifications" section.

Cable lengths

The maximum permissible cable lengths are specified for standard cable types or cable types recommended by SIEMENS. Longer cables can only be used after consultation.

The listed cable length represents the actual distance between the converter and the motor, taking account factors such as parallel laying, current-carrying capacity, and the laying factor.

- Unshielded cable (e.g. Protodur NYY): max. 450 m
- Shielded cable (e.g., Protodur NYCWY, Protoflex EMV 3 Plus): max. 300 m.

Note

Cable lengths

The cable lengths specified are also valid if a motor choke is in use (option L08).

Note

Shielded cables

The PROTOFLEX-EMV-3 PLUS shielded cable recommended by Siemens is the protective conductor and comprises three symmetrically-arranged protective conductors. The individual protective conductors must each be provided with cable eyes and be connected to ground. The cable also has a concentric flexible braided copper shield. To comply with EN 61800-3 regarding radio interference suppression, the shield must be grounded at both ends with the greatest possible surface area.

On the motor side, cable glands that contact the shield with the greatest possible surface area are recommended for the terminal boxes.

4.6.3 Connecting shielded three-phase current cables

A good shield connection is achieved by connecting the shields in the converter cabinet through a large surface area to the EMC shield rail using EMC shield clamps (PUK shield clamps). EMC shield clamps (PUK shield clamps) are provided in the accessories pack to connect to the shield rail.

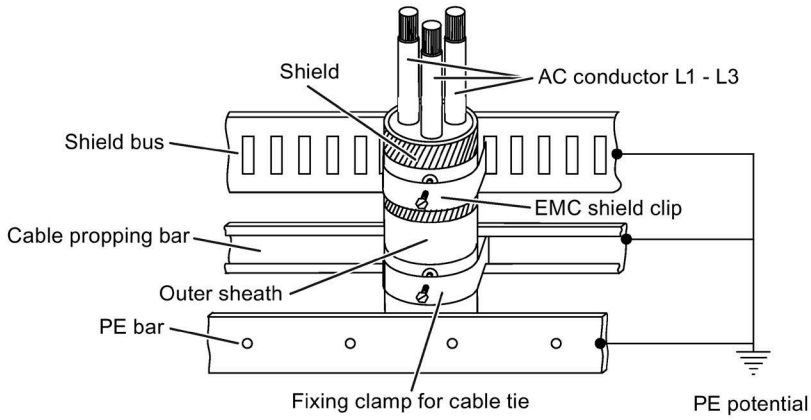

Figure 4-5 Connecting shields in the converter at the EMC shield rail using EMC shield clamps (PUK shield clamps)

Note

Detailed engineering information for connected shielded three-phase cables with concentrically arranged shields is provided in the "SINAMICS Low Voltage Configuration Manual" on the customer DVD supplied with the equipment.

4.6.4 Connecting the motor and power cables

Connecting the motor and power cables on the cabinet unit

Note

Position of the connections

For the location of the connections, see the layout diagrams.

1. Open the cabinet, remove the covers (if necessary) in front of the connection panel for motor cables (terminals U2/T1, V2/T2, W2/T3; X2) and power cables (terminals U1/L1, V1/L2, W1/L3; X1).
2. Move or remove the bottom plate below the connection panel in order to feed through the motor and power cables.
3. Screw the protective earth (PE) into the appropriate terminal (with earth symbol) (50 Nm for M12) at the points provided in the cabinet.
4. Connect the motor and power cables to the terminals.
   Make sure that you connect the conductors in the correct sequence: U2/T1, V2/T2, W2/T3 and U1/L1, V1/L2, W1/L3.

NOTICE

Material damage due to loose power connections

Insufficient tightening torques or vibration can result in faulty electrical connections. This can result in damage due to fire or malfunctions.

- Tighten all power connections with the specified tightening torques, e.g. line supply connection, motor connection, DC link connections.
- Regularly check all power connections by retightening them with the specified tightening torque. This applies in particular after transport.

Note

PE connection of the motor

The PE connection on the motor must be guided back directly to the cabinet unit and connected there.

Direction of motor rotation

EN 60034-7 defines the two ends of an electric motor as follows:

- DE (Drive End): usually the drive end of the motor
- NDE (Non-Drive End): usually the non-drive end of the motor

An electric motor will rotate clockwise if the shaft is turning clockwise when looking at the DE side.

For electric motors with 2 shaft ends, the direction of rotation must be determined based on the shaft end specified as the drive end.

For clockwise rotation, the electric motor must be connected according to the following table.

Table 4- 4 Cabinet unit and motor connection terminals

Cabinet unit (connection terminals)	Motor (connection terminals)
U2/T1	U
V2/T2	V
W2/T3	W

In contrast to the connection for the clockwise phase sequence, two phases have to be reversed with a counter-clockwise phase sequence (looking at the drive shaft).

Note

Information on the phase sequence

If an incorrect phase sequence was connected when the motor was connected, p1821 (phase sequence direction reversal) can be used to correct the incorrect phase sequence without physically changing it over (see "Functions, monitoring and protective functions/direction reversal").

With motors that can be star-connected or delta-connected, it must be ensured that the windings are interconnected consistent with the operating voltage indicated on the rating plate or in the motor documentation. Make sure that the winding insulation of the connected motor has sufficient insulation strength to meet the requirements for converter operation.

4.6.5 Adjusting the fan voltage (-G1 -T10, -T1 -T10)

The power supply for the device fans (230 V 1 AC) in the Active Line Module (-G1 -T10) and in the Motor Module (-T1 -T10) is generated from the main supply system by means of transformers.
The positions of the transformers are shown in the layout diagrams provided.
The transformers are equipped with taps on the primary side to finely adapt to the rated line supply voltage.

If necessary, the connection fitted in the factory, shown with a dashed line, must be reconnected to the actual line voltage.

Note

Cabinet units with two transformers

Two transformers (-G1-T10 and -G1-T20 or -T1-T10 and -T1-T20) are installed in the following cabinet units. The two primary terminals on these devices must be set together.

- for 3 AC 380 ... 480 V:
  6SL3710-7LE36-1AA3, 6SL3710-7LE37-5AA3, 6SL3710-7LE38-4AA3, 6SL3710-7LE41-0AA3, 6SL3710-7LE41-2AA3, 6SL3710-7LE41-4AA3
- for 3 AC 500 ... 690 V:
  6SL3710-7LG34-1AA3, 6SL3710-7LG34-7AA3, 6SL3710-7LG35-8AA3, 6SL3710-7LG37-4AA3, 6SL3710-7LG38-1AA3, 6SL3710-7LG38-8AA3, 6SL3710-7LG41-0AA3, 6SL3710-7LG41-3AA3

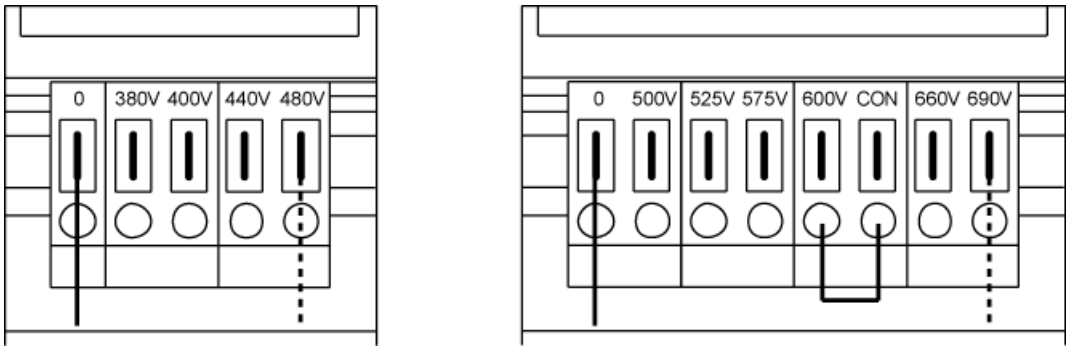

Figure 4-6 Setting terminals for the fan transformers (380 to 480 V 3 AC / 500 to 690 V 3 AC)

The line voltage assignments for making the appropriate setting on the fan transformer are indicated in the following tables.

Note

Fan transformer for 660 to 690 V 3 AC

With the 500 V to 690 V 3 AC fan transformer, a jumper is inserted between the "600 V" terminal and "CON" terminal. The jumper between terminal "600V" and "CON" is for internal use.

WARNING

Fire due to overheating resulting from insufficient equipment fan voltage

If the terminals are not reconnected to correspond with the actual line voltage, overheating and risks to personnel due to smoke and fire may result.
This can also cause the fan fuses to rupture due to overload.

- Set the terminals in accordance with the actual line voltage.

Note

Article numbers for fan fuses

The article numbers for fan fuses that have blown can be found in the spare parts list.

Table 4- 5 Line voltage assignment for the setting at the fan transformer (3-phase 380 ... 480 V AC)

Line voltage	Taps of the fan transformer (-G1 -T10, -T1 -T10)
380 V ± 10%	380 V
400 V ± 10%	400 V
440 V ± 10%	440 V
480 V ± 10%	480 V

Table 4- 6 Line voltage assignment for the setting at the fan transformer (3-phase 500 ... 690 V AC)

Line voltage	Taps of the fan transformer (-G1 -T10, -T1 -T10)
500 V ± 10%	500 V
525 V ± 10%	525 V
575 V ± 10%	575 V
600 V ± 10%	600 V
660 V ± 10%	660 V
690 V ± 10%	690 V

4.6.6 Adjusting the internal power supply (-T10)

A transformer (-T10) is installed in the Line Connection Module for the internal 230 V AC power supply for the cabinet unit. The location of the transformer is indicated in the layout diagrams supplied.

When delivered, the taps are always set to the highest level. The line-side terminals of the transformer may need to be reconnected according to the existing line voltage.

The line voltage assignments for making the appropriate setting on the transformer for the internal power supply are indicated in the following tables.

NOTICE

Material damage when the voltage is set too high

If the terminals are not reconnected corresponding to the actual line voltage, this can damage the device if the voltage is set too high.

- Set the terminals in accordance with the actual line voltage.

Table 4- 7 Line voltage assignments for the internal power supply (3 AC 380 ... 480 V)

Line voltage range	Tap	Adaptation transformer taps (-T10) LH1 – LH2
342 ... 390 V	380 V	1 - 2
391 ... 410 V	400 V	1 – 3
411 ... 430 V	415 V	1 – 4
431 ... 450 V	440 V	1 – 5
451 ... 470 V	460 V	1 – 6
471 ... 528 V	480 V	1 – 7

Table 4- 8 Line voltage assignments for the internal power supply (3 AC 500 ... 690 V)

Line voltage range	Tap	Adaptation transformer taps (-T10) LH1 – LH2
450 ... 515 V	500 V	1 - 8
516 ... 540 V	525 V	1 – 9
541 ... 560 V	550 V	1 – 10
561 ... 590 V	575 V	1 – 11
591 ... 630 V	600 V	1 – 12
631 ... 680 V	660 V	1 – 14, terminals 12 and 13 are jumpered
681 ... 759 V	690 V	1 – 15, terminals 12 and 13 are jumpered

4.6.7 Removing the connection clip to the basic interference suppression module for operation on an ungrounded line supply (IT system)

If the cabinet unit is operated on an ungrounded line supply (IT system), the connection clip for the basic interference suppression module of the Active Interface Module (-R2) must be removed.

Note

Warning label on the connection clip

A yellow warning label is attached to each connection clip so that it is easier to find.

- The warning label must be removed from the connection clip (by pulling it off) if the connection clip is to remain in the unit (operation on a grounded line supply).
- The warning label must be removed together with the connection clip if the unit is operated on a non-grounded line supply (IT system).

Figure 4-7 Warning label on the connection clip

NOTICE
Damage to the device through not removing the connection clip with a non-grounded line supply Failure to remove the connection clip to the basic interference suppression module on a non-grounded line supply (IT system) can cause significant damage to the device. • With a non-grounded line supply (IT system), remove the connection clip to the basic interference suppression module.

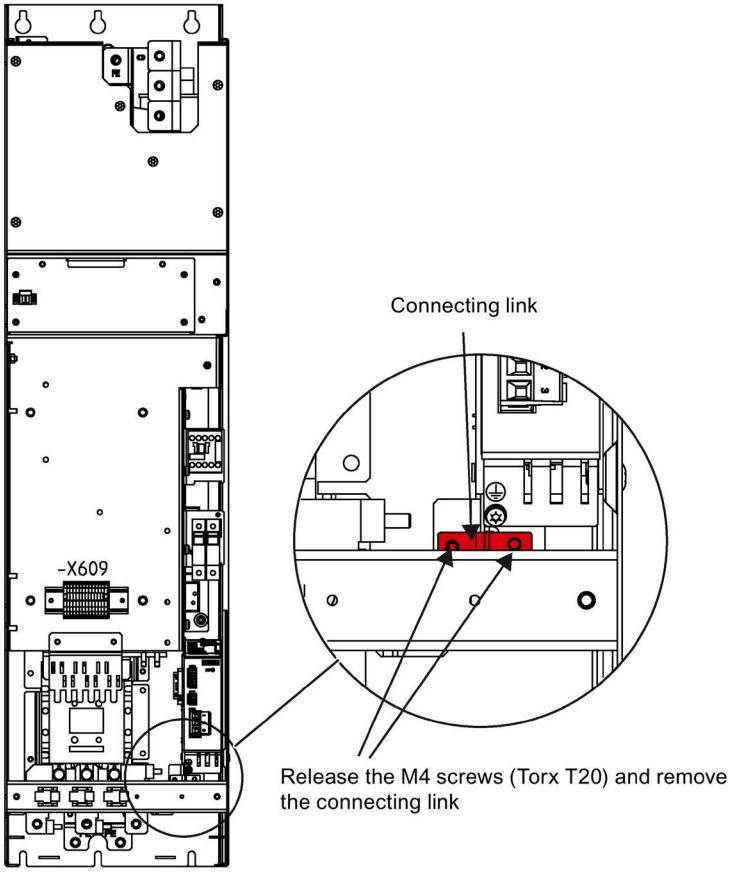

Figure 4-8 Removing the connection bracket to the basic interference suppression module in the Active Interface Module for frame size FI

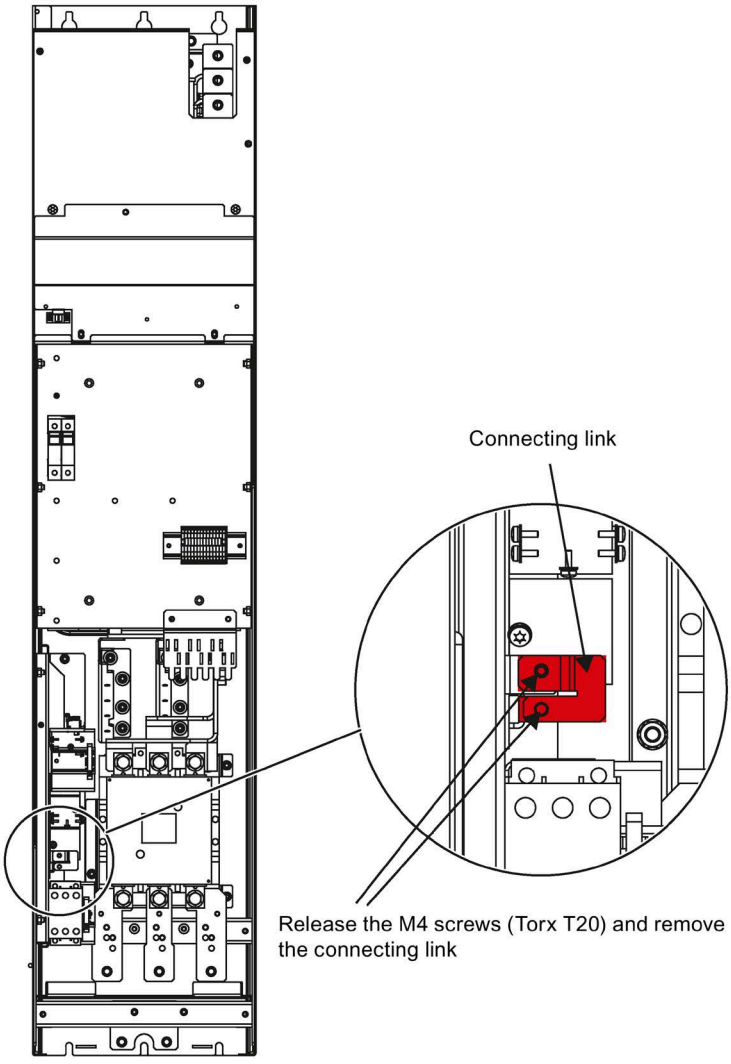

Figure 4-9 Removing the connection bracket to the basic interference suppression module in the Active Interface Module for frame size GI

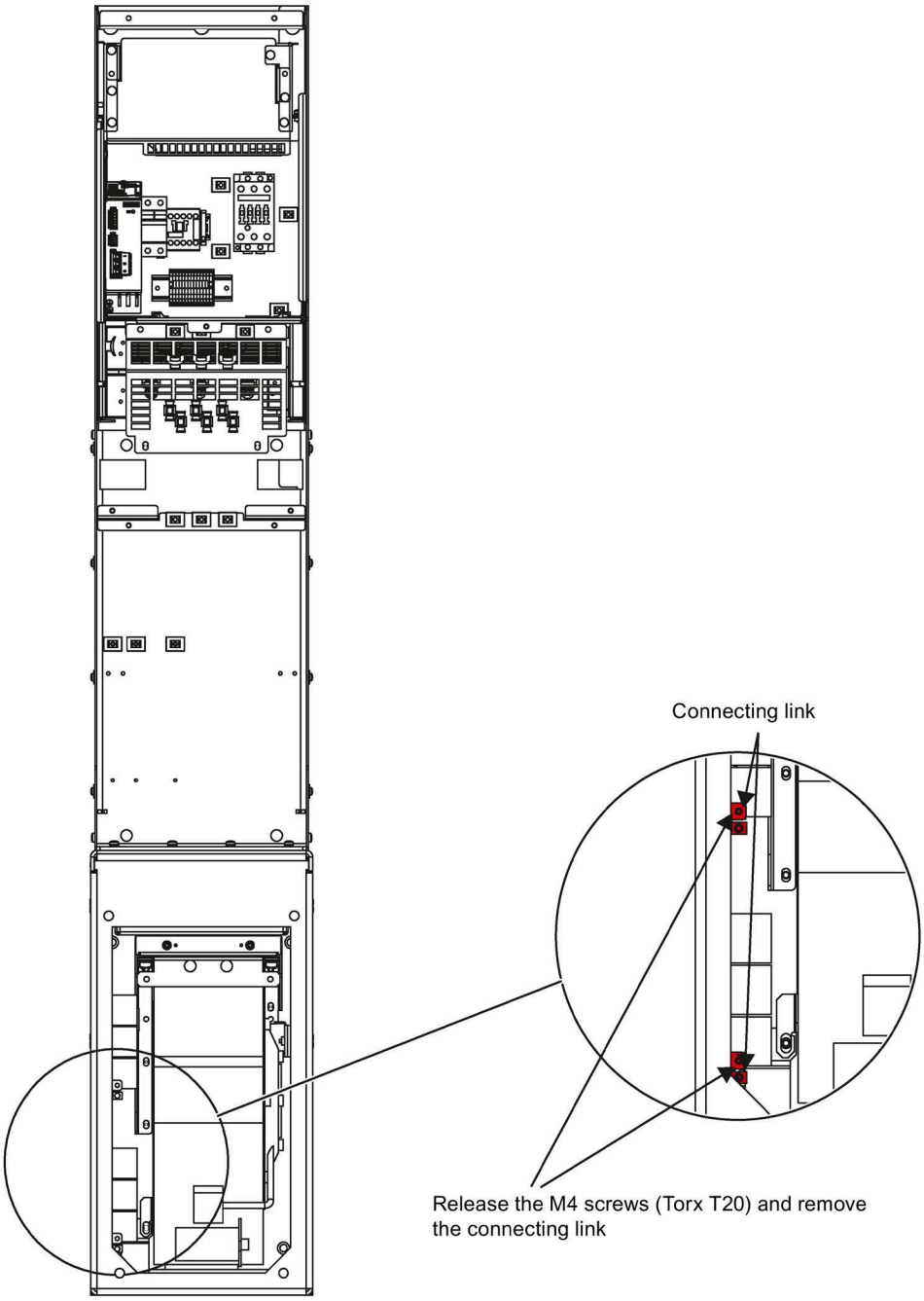

Figure 4-10 Removing the connecting clip to the basic interference suppression module in the Active Interface Module for frame size HI

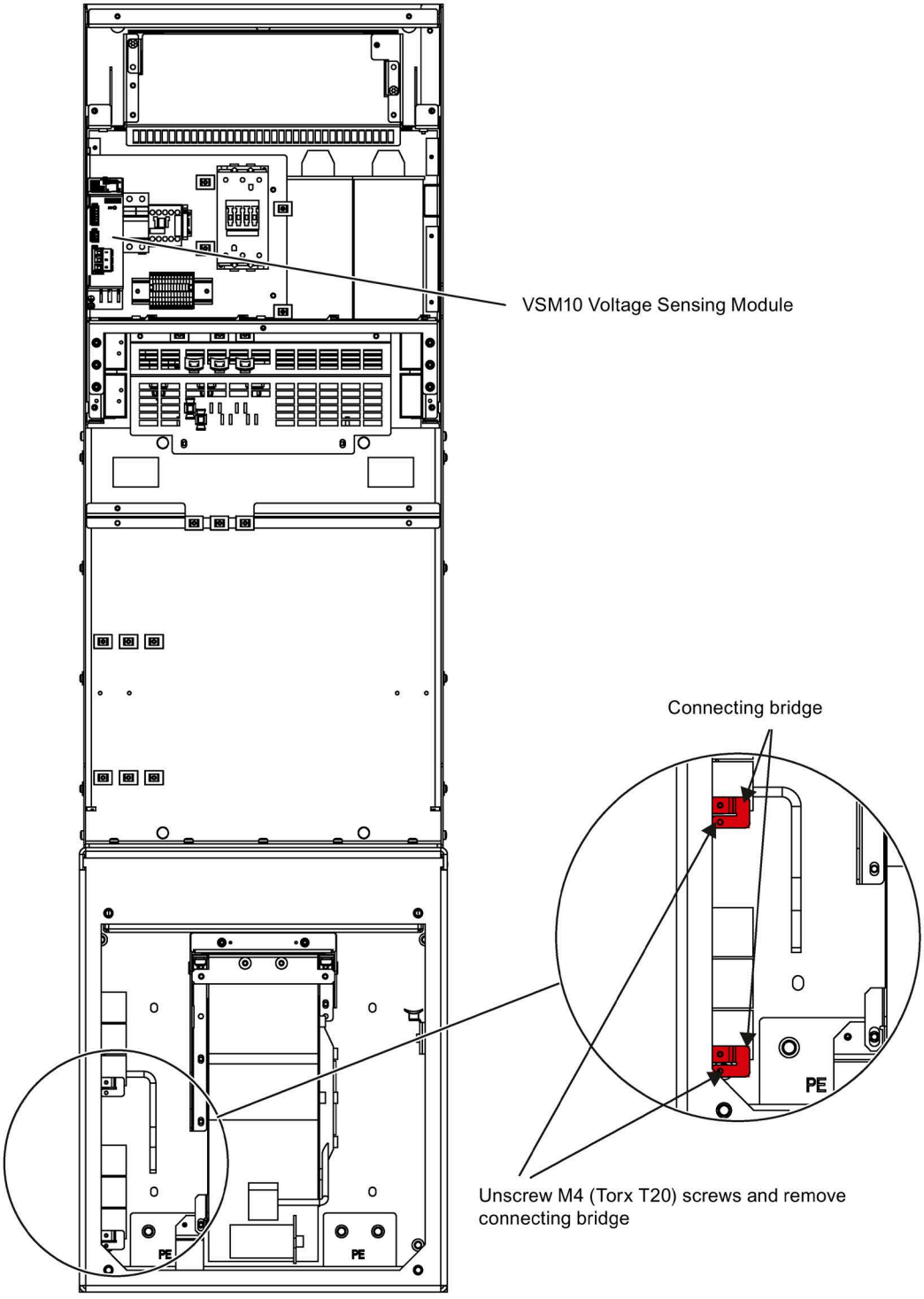

Figure 4-11 Removing the connecting clip to the basic interference suppression module in the Active Interface Module for frame size JI

Removing the connector jumper in the VSM10 Voltage Sensing Module

When operating the cabinet unit on an ungrounded line supply (IT system), at the Voltage Sensing Module (VSM10), remove the plug-in jumper in terminal X530 at the lower side of the component.
Use two screwdrivers or another suitable tool to relieve the holding springs in the terminal and then withdraw the plug-in jumper.

Terminal X530 with connector jumper	Relieve the springs and withdraw the connector jumper

Note

Replacing a VSM10 Voltage Sensing Module

When replacing a Voltage Sensing Module VSM10 by one with a different article number, then inform yourself about the applicable boundary conditions.

4.6.8 Setting the circuit breaker

Description

For rated currents above 800 A, the standard circuit breaker is used to disconnect the voltage and provide overload and short-circuit protection. The circuit breaker is controlled and supplied within the converter.

NOTICE
Material damage caused by switching on too frequently The cabinet unit can be damaged if it is switched on too frequently. • Do not switch on the cabinet unit more frequently than every 3 minutes.

Connecting

Table 4- 9 Terminal block X50 – "Circuit breaker closed" checkback contact

Terminal	Designation [1]	Technical data
1	NO	Max. load current: 10 A Max. switching voltage: 250 V AC Max. contact rating: 250 VA Required minimum load: ≥ 1 mA
2	NC	
3	COM	
Max. connectable cross-section: 4 mm²		

[1] NO: normally-open contact, NC: normally-closed contact, COM: mid-position contact

⚠ WARNING

Dangerous voltage as a result of external auxiliary supply

For rated currents of more than 800 A and applied line voltage, dangerous voltages are present in the cabinet unit even when the circuit breaker is open. Death or serious injury can result when live parts are touched.

- Observe the general safety rules when working on the device.

Setting the circuit breaker

With the factory setting, the circuit breaker is set to the incoming rated current of the cabinet unit, and as a consequence, the device is adequately protected.

The circuit breaker is set as follows in the factory:

Table 4- 10 Factory setting of the circuit breaker

Article no.	Output current	Overcurrent trip (L)	Short-circuit trip, non-delayed (I)
6SL3710-7LE38-4AA3	840 A	0.8	2
6SL3710-7LE41-0AA3	985 A	0.7	2
6SL3710-7LE41-2AA3	1260 A	0.7	2
6SL3710-7LE41-4AA3	1405 A	0.8	2
6SL3710-7LG38-1AA3	810 A	0.8	2
6SL3710-7LG38-8AA3	910 A	0.8	2
6SL3710-7LG41-0AA3	1025 A	0.8	2
6SL3710-7LG41-3AA3	1270 A	0.7	2

WARNING

Incorrect circuit breaker setting

An incorrect setting can cause unwanted or delayed tripping of the circuit breaker and result in damage to the cabinet unit and can therefore result in death or severe injury.

- Check the settings described above, and if required, adapt the circuit breaker settings corresponding to the factory setting.

Diagnostics

Messages output during operation and in the event of faults are described in the Operating Instructions in the customer DVD supplied with the device.

4.7 External supply of the auxiliary supply from a secure line

Description

An external auxiliary supply is always recommended if communication and closed-loop control are to be independent of the supply system. An external auxiliary supply is particularly recommended for low-power lines susceptible to short-time voltage dips or power failures.

With an external supply independent of the main supply, warnings and fault messages may still be displayed on the operator panel and internal protection and monitoring devices if the main supply fails.

WARNING

Dangerous voltage as a result of external auxiliary supply

When the external auxiliary supply is connected, dangerous voltages are present in the cabinet unit even when the main switch is open. Death or serious injury can result when live parts are touched.

- Observe the general safety rules when working on the device.

Note

External auxiliary supply for automatic restart

An external auxiliary supply (infeed) must always be used if the automatic restart (WEA) function is to be used with integrated EMERGENCY OFF option (L57) or EMERGENCY STOP option (L59, L60).
Otherwise, the automatic restart function does not work.

The fuse must not exceed 16 A.

The connection is protected inside the cabinet with a 5 A fuse.

Connection

- On terminal block -X40, remove the jumpers between terminals 1 and 2 as well as 5 and 6.
- Connect the external 230 V AC supply to terminals 2 (L1) and 6 (N).

Maximum connectable cross-section: 4 mm^2

4.8 Signal connections

4.8.1 Control Unit CU320-2 DP

In the standard version, the cabinet unit contains a CU320-2 DP control unit, which handles the communication and open-loop/closed-loop control functions.

A PROFIBUS interface is available for higher-level communication.

Connection overview

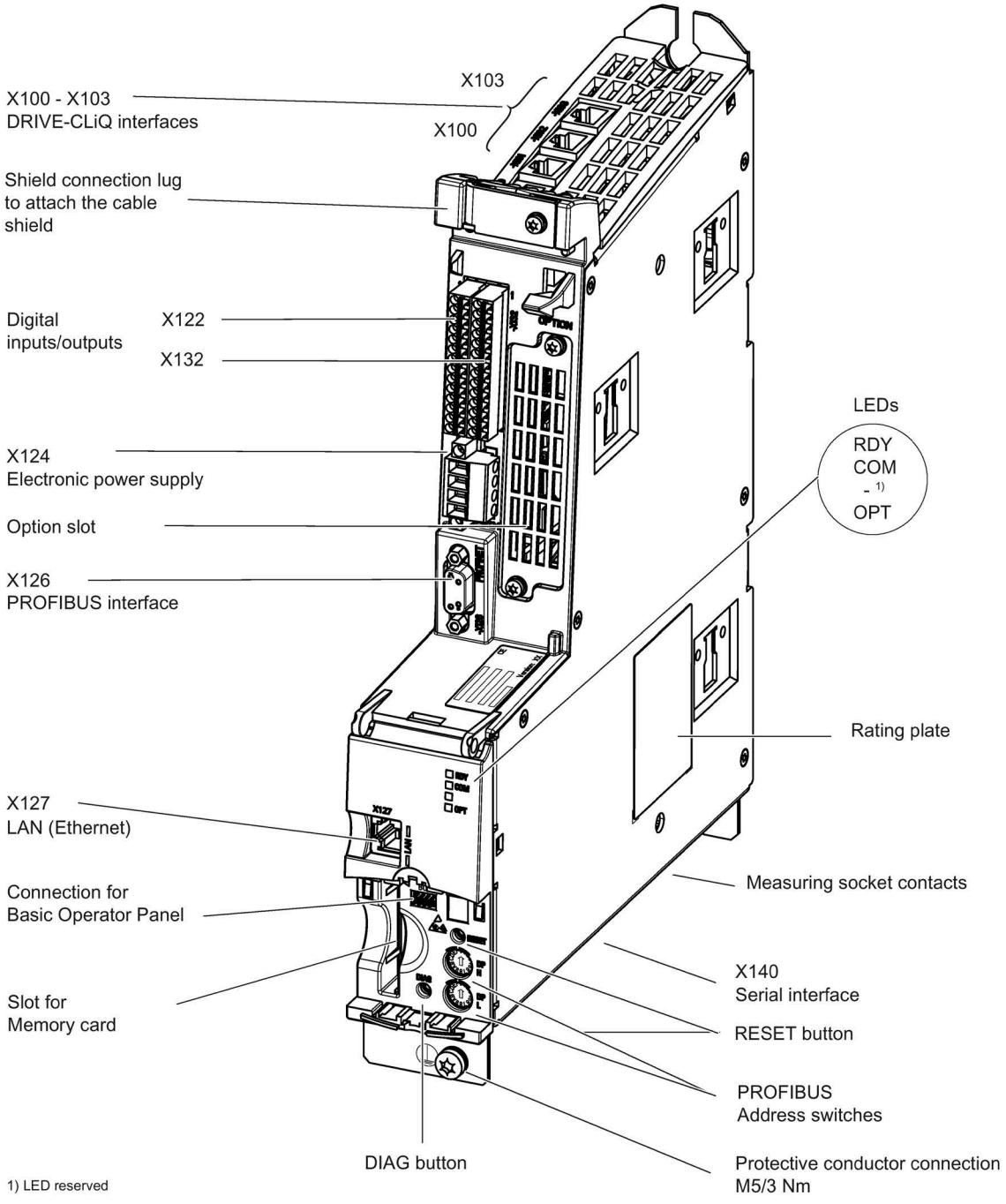

Figure 4-12 Connection overview of the CU320-2 DP Control Unit (without cover)

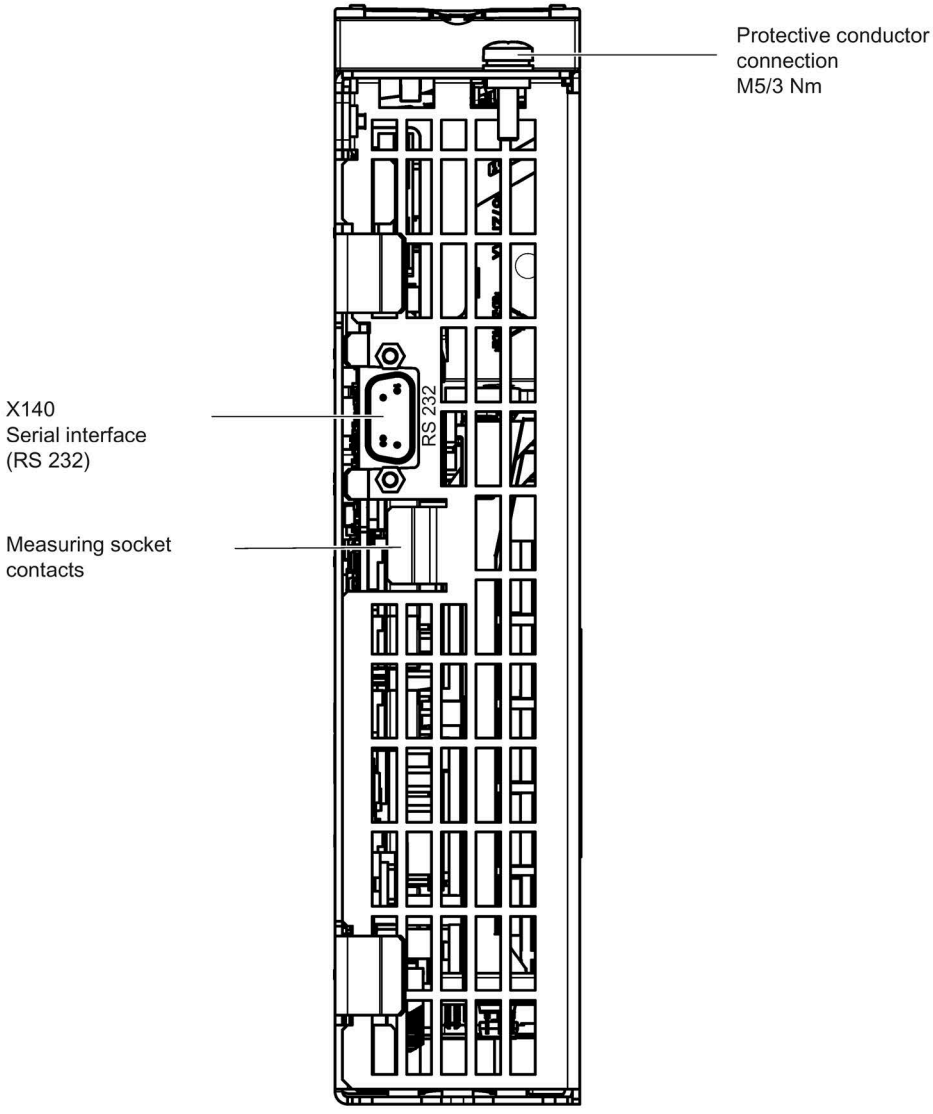

Figure 4-13 Interface X140 and measuring sockets T0 to T2 - CU320-2 DP (view from below)

NOTICE
Malfunctions or damage to the option board by inserting and withdrawing in operation Withdrawing and inserting the option board in operation can damage it or cause it to malfunction. • Only withdraw or insert the Option Board when the Control Unit is in a no-current condition.

Connection example

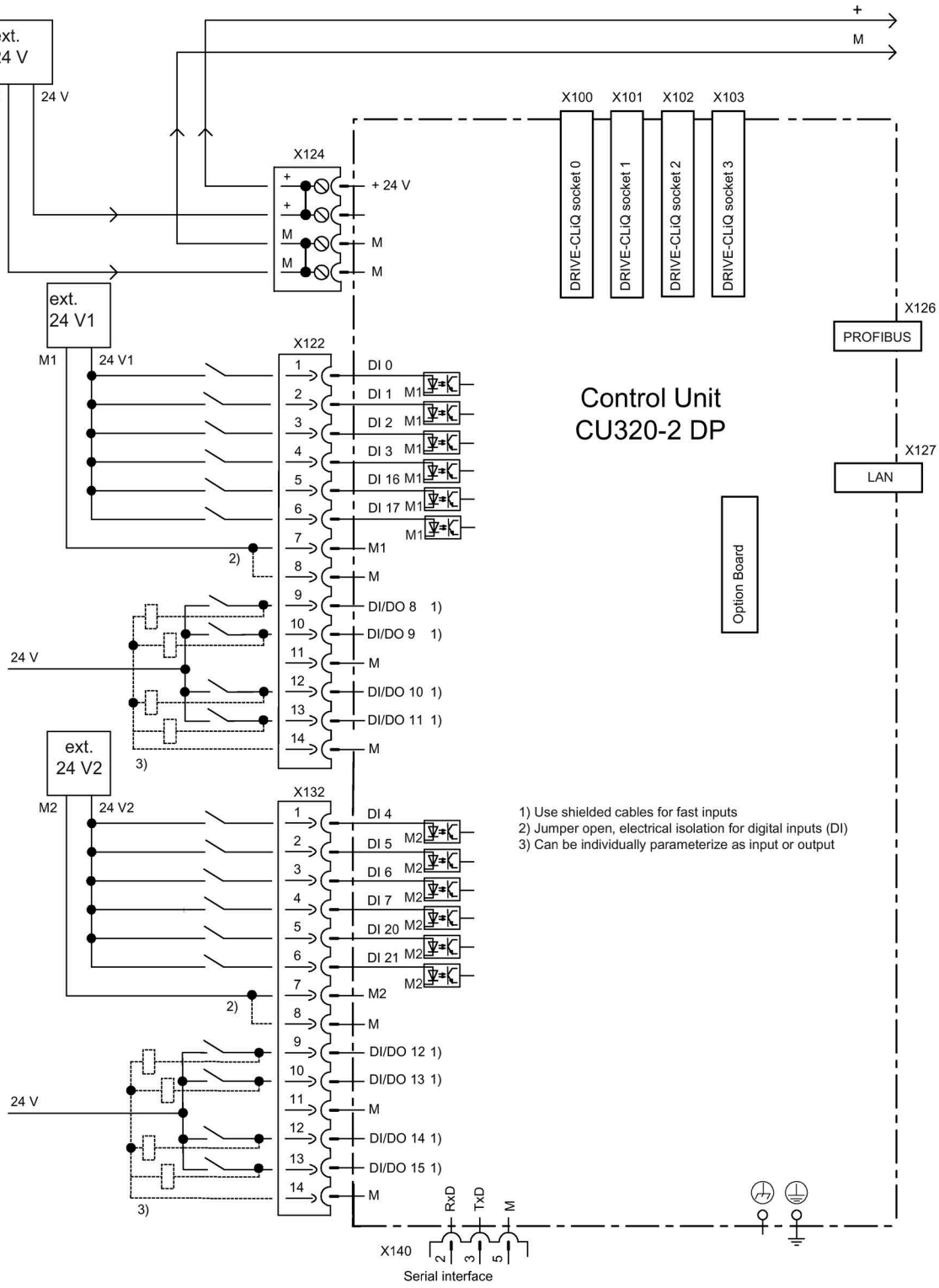

Figure 4-14 Connection example of CU320-2 DP

X100 to X103: DRIVE-CLiQ interface

Table 4- 11 DRIVE-CLiQ interface X100 – X103

Connector	Pin	Signal name	Technical data
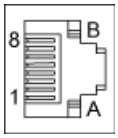	1	TXP	Transmit data +
	2	TXN	Transmit data -
	3	RXP	Receive data +
	4	Reserved, do not use	
	5	Reserved, do not use	
	6	RXN	Receive data -
	7	Reserved, do not use	
	8	Reserved, do not use	
	A	+ (24 V)	Power supply
	B	M (0 V)	Electronics ground
Connector type: RJ45 socket Blanking plate for DRIVE-CLiQ interfaces (50 pcs.) Article number: 6SL3066-4CA00-0AA0			

X122: Digital inputs/outputs

Table 4- 12 Terminal block X122

Connector	Pin	Designation [1]	Technical data
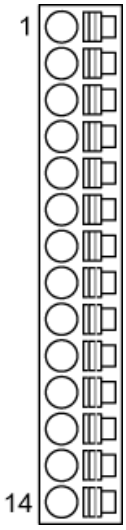	1	DI 0	Voltage (max.): -3 ... +30 V DC Typical power consumption: 9 mA at 24 V Electrical isolation: reference potential is terminal M1 Level (with ripple) High level: 15 ... 30 V Low level: -3 ... +5 V Input delay (typ.): For "0" → "1": 50 µs For "1" → "0": 150 µs
	2	DI 1	
	3	DI 2	
	4	DI 3	
	5	DI 16	
	6	DI 17	
	7	M1	Reference potential for terminal 1 ... 6
	8	M	Electronics ground
	9	DI/DO 8	**As input**: Voltage: -3 ... +30 VDC Current consumption, typical: 9 mA at 24 V Level (with ripple) High level: 15 ... 30 V Low level: -3 ... +5 V DI/DO 8, 9, 10, and 11 are "high-speed inputs" [2] Input delay (typ.): For "0" → "1": 5 µs For "1" → "0": 50 µs **As output**: Voltage: 24 V DC Max. load current per output: 500 mA Continuous short-circuit proof Output delay (typ./max.): [3] For "0" → "1": 150 µs / 400 µs For "1" → "0": 75 µs / 100 µs Switching frequency: For resistive load: Max. 100 Hz For inductive load: Max. 0.5 Hz For lamp load: Max. 10 Hz Maximum lamp load: 5 W
	10	DI/DO 9	
	11	M	
	12	DI/DO 10	
	13	DI/DO 11	
	14	M	
Max. connectable cross-section: 1.5 mm²			

[1] DI: digital input; DI/DO: bidirectional digital input/output; M: Electronics ground M1: reference potential

[2] The rapid inputs can be used as probe inputs or as inputs for the external zero mark.

[3] Data for: V_{cc} = 24 V; load 48 Ω; high ("1") = 90% V_{out}; low ("0") = 10% V_{out}

The maximum cable length that can be connected is 30 m.

Note

Ensuring the function of digital inputs

An open input is interpreted as "low".

Terminal M1 must be connected so that the digital inputs (DI) can function.

This is achieved through one of the following measures:

1. Also route the reference ground of the digital inputs.
2. A jumper to terminal M. (**Note:** This removes the electrical isolation for these digital inputs.)

Note

If the 24 V supply is briefly interrupted, then the digital outputs are deactivated during this time.

X132: Digital inputs/outputs

Table 4- 13 Terminal block X132

Connector	Pin	Designation [1]	Technical data
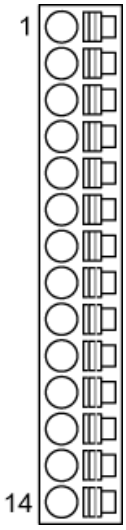	1	DI 4	Voltage (max.): -3 ... +30 VDC Current consumption, typical: 9 mA at 24 V Electrical isolation: The reference potential is terminal M2 Level (including ripple) High level: 15 ... 30 V Low-level: -3 ... +5 V Input delay (typ.): For "0" → "1": 50 µs For "1" → "0": 150 µs
	2	DI 5	
	3	DI 6	
	4	DI 7	
	5	DI 20	
	6	DI 21	
	7	M2	Reference potential for terminal 1 ... 6
	8	M	Electronics ground
	9	DI/DO 12	**As input**: Voltage: -3 ... +30 VDC Current consumption, typical: 9 mA at 24 V Level (including ripple) High level: 15 ... 30 V Low-level: -3 ... +5 V DI/DO 12, 13, 14, and 15 are "high-speed inputs" [2] Input delay (typ.): For "0" → "1": 5 µs For "1" → "0": 50 µs **As output**: Voltage: 24 V DC Max. load current per output: 500 mA Continuous short-circuit proof Output delay (typ./max.): [3] For "0" → "1": 150 µs / 400 µs For "1" → "0": 75 µs / 100 µs Switching frequency: For resistive load: Max. 100 Hz For inductive load: Max. 0.5 Hz For lamp load: Max. 10 Hz Maximum lamp load: 5 W
	10	DI/DO 13	
	11	M	
	12	DI/DO 14	
	13	DI/DO 15	
	14	M	
Max. connectable cross-section: 1.5 mm²			

[1] DI: digital input; DI/DO: bidirectional digital input/output; M: Electronics ground; M2: reference potential

[2] The rapid inputs can be used as probe inputs or as inputs for the external zero mark

[3] Data for: V_{cc} = 24 V; load 48 Ω; high ("1") = 90% V_{out}; low ("0") = 10% V_{out}

The maximum cable length that can be connected is 30 m.

Note

Ensuring the function of digital inputs

An open input is interpreted as "low".

To enable the digital inputs (DI) to function, terminal M2 must be connected.

This is achieved through one of the following measures:

1. Also route the reference ground of the digital inputs.
2. A jumper to terminal M. (**Note:** This removes the electrical isolation for these digital inputs.)

Note

If the 24 V supply is briefly interrupted, then the digital outputs are deactivated during this time.

X126: PROFIBUS connection

The PROFIBUS is connected by means of a 9-pin SUB D socket (X126). The connections are electrically isolated.

Table 4- 14 PROFIBUS interface X126

Connector	Pin	Signal name	Meaning	Range
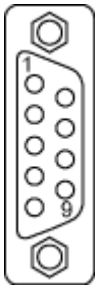	1	-	Not assigned	
	2	M24_SERV	Power supply for teleservice, ground	0 V
	3	RxD/TxD–P	Receive/transmit data P (B)	RS485
	4	CNTR–P	Control signal	TTL
	5	DGND	PROFIBUS data reference potential	
	6	VP	Supply voltage plus	5 V ± 10%
	7	P24_SERV	Power supply for teleservice, + (24 V)	24 V (20.4 ... 28.8 V)
	8	RxD/TxD–N	Receive/transmit data N (A)	RS485
	9	-	Not assigned	

A teleservice adapter can be connected to the PROFIBUS interface for remote diagnostics. The power supply for the teleservice (terminals 2 and 7) can have a load of up to 150 mA.

NOTICE

Damage to the Control Unit or other PROFIBUS nodes due to high leakage currents

Significant leakage currents can flow along the PROFIBUS cable if a suitable equipotential bonding conductor is not used and destroy the Control Unit or other PROFIBUS nodes.

- An equipotential bonding conductor with a cross-section of at least 25 mm^2 must be used between components in a system that are located at a distance from each other.

NOTICE

Damage to the Control Unit or other CAN bus nodes due to the connection of a CAN cable

If a CAN cable is connected to the X126 interface, this can destroy the Control Unit or other CAN bus nodes.

- Do not connect any CAN cables to the X126 interface.

PROFIBUS connector

For the first and last participants in a bus line, the terminating resistors must be switched in, otherwise, data transmission will not function correctly.

The terminating resistors are activated in the connector.

The cable shield must be connected at both ends and over a large surface area.

Connectors

The cables must be connected via PROFIBUS connectors as they contain the necessary terminating resistors.

The figure below shows suitable PROFIBUS connectors with/without a PG/PC connector.

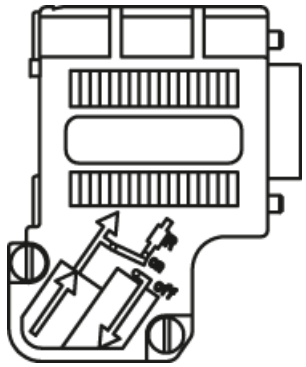

PROFIBUS connector
without PG/PC connection
6ES7972-0BA42-0XA0

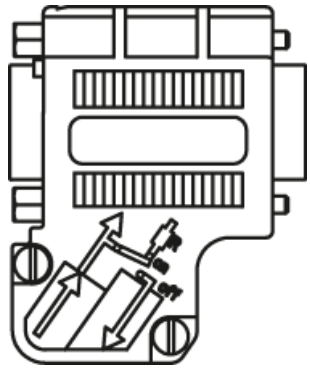

PROFIBUS connector
with PG/PC connection
6ES7972-0BB42-0XA0

Bus terminating resistor

The bus terminating resistor must be switched on or off depending on its position in the bus, otherwise the data will not be transmitted properly.

The terminating resistors for the first and last nodes in a line must be switched on; the resistors must be switched off at all other connectors.

The cable shield must be connected at both ends over large-surface area contacts.

Note

Connector type

Depending on the connector type, the correct assignment of the connector must be ensured (IN/OUT) in conjunction with the terminating resistor.

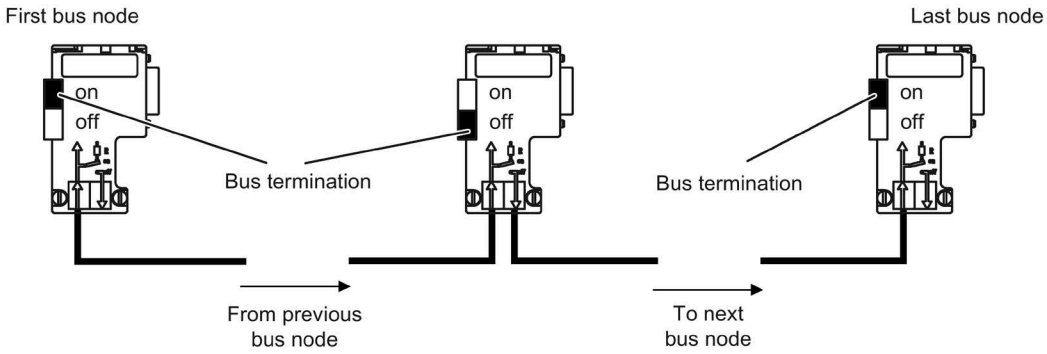

Figure 4-15 Position of the bus terminating resistors

PROFIBUS address switches

The PROFIBUS address is set as a hexadecimal value via two rotary coding switches. Values between 0_{dec} (00_{hex}) and 127_{dec} ($7F_{hex}$) can be set as the address. The upper rotary coding switch (H) is used to set the hexadecimal value for 16^1 and the lower rotary coding switch (L) is used to set the hexadecimal value for 16^0.

Table 4- 15 PROFIBUS address switches

Rotary coding switches	Significance	Examples		
		21_{dec}	**35_{dec}**	**126_{dec}**
		15_{hex}	**23_{hex}**	**$7E_{hex}$**
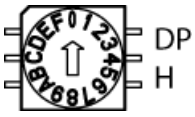	$16^1 = 16$	1	2	7
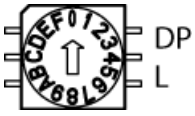	$16^0 = 1$	5	3	E

Setting the PROFIBUS address

The factory setting for the rotary coding switches is 0_{dec} (00_{hex}).

There are two ways to set the PROFIBUS address:

1. Via p0918
   - To set the bus address for a PROFIBUS node using STARTER, first set the rotary code switches to 0_{dec} (00_{hex}) and 127_{dec} ($7F_{hex}$).
   - Then use parameter p0918 to set the address to a value between 1 and 126.
2. Via the PROFIBUS address switches on the Control Unit
   - The address is set manually to values between 1 and 126 using the rotary coding switches. In this case, p0918 is only used to read the address.

Note

The rotary coding switches used to set the PROFIBUS address are located beneath the cover.

Note

Address 126 is used for commissioning. Permitted PROFIBUS addresses are 1 ... 126.

When several Control Units are connected to a PROFIBUS line, you set the addresses differently than for the factory setting. Each PROFIBUS address in a PROFIBUS line can only be assigned once. Either set the PROFIBUS address in absolute terms using the rotary coding switches – or selectively in parameter p0918. Each change made to the bus address is not effective until POWER ON.

The currently set address of the rotary coding switch is displayed in parameter r2057.

X127: LAN (Ethernet)

Note

Use

Ethernet interface X127 is intended for commissioning and diagnostics, which means that it must always be accessible (e.g. for service).

Further, the following restrictions apply to X127:

- Only local access is possible
- No networking - or only local networking in a closed and locked electrical cabinet permissible

If it is necessary to remotely access the electrical cabinet, then additional security measures must be applied so that misuse through sabotage, unqualified data manipulation and intercepting confidential data is completely ruled out (also see Chapter "Industrial Security (Page 26)").

Table 4- 16 X127 LAN (Ethernet)

Connector	Pin	Designation	Technical data
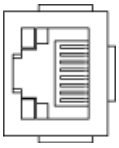	1	TXP	Ethernet transmit data +
	2	TXN	Ethernet transmit data -
	3	RXP	Ethernet receive data +
	4	Reserved, do not use	
	5	Reserved, do not use	
	6	RXN	Ethernet receive data -
	7	Reserved, do not use	
	8	Reserved, do not use	
Connector type: RJ45 socket			

Note

The LAN (Ethernet) interface does not support Auto MDI(X). If the LAN interface of the communication partner also cannot handle auto-MDI(X), then a crossover cable must be used to establish the connection.

For diagnostic purposes, the X127 LAN interface features a green and a yellow LED. These LEDs indicate the following status information:

Table 4- 17 LED statuses for the X127 LAN interface

LED	Color	State	Description
Link port	-	Off	Missing or faulty link
	Green	Continuous light	10 or 100 Mbit link available
Activity port	-	Off	No activity
	Yellow	Flashing light	Sending or receiving

X140: serial interface (RS232)

The AOP30 operator panel for operating/parameterizing the device can be connected via the serial interface. The interface is located on the underside of the Control Unit.

Table 4- 18 Serial interface (RS232) X140

Connector	Pin	Designation	Technical data
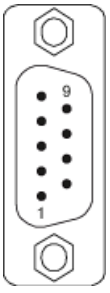	2	RxD	Receive data
	3	TxD	Transmit data
	5	Ground	Ground reference
Connector type: 9-pin SUB D connector			

Note

Connecting cable to the AOP30

The connection cable to AOP30 may only contain the three contacts which are shown in the drawing; a completely allocated cable may not be used.

T0, T1, T2: Measuring socket contacts

Table 4- 19 Measuring socket contacts T0, T1, T2

Connector	Socket	Function	Technical data
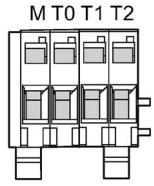	M	Ground	Voltage: 0... 5 V Resolution: 8 bits Load current: max. 3 mA Continuous short-circuit proof The reference potential is terminal M
	T0	Measuring socket contact 0	
	T1	Measuring socket contact 1	
	T2	Measuring socket contact 2	
PCB plug connector from Phoenix Contact, type: ZEC 1.0/ 4-ST-3.5 C1 R1.4, order number: 1893708			

Note

Cable cross section

The measuring socket contacts are only suitable for cable cross-sections of 0.2 mm^2 to 1 mm^2.

Note

Using the measuring socket contacts

The measuring socket contacts support commissioning and diagnostic functions. It must not be connected for normal operation.

DIAG button

The DIAG pushbutton is reserved for service functions.

Slot for the memory card

Figure 4-16 Slot for the memory card

Note

Plant standstill by withdrawing or inserting the memory card during operation

If the memory card is withdrawn or inserted during operation, then data can be lost, possibly resulting in a plant standstill.

- Only withdraw and insert the memory card when the Control Unit is in a no-voltage condition.

Note

Insertion direction for the memory card

Only insert the memory card as shown in the photo above (arrow at top right).

NOTICE

Memory card damage caused by electric fields or electrostatic discharge

Electrical fields or electrostatic discharge may result in the memory card being damaged and so cause malfunctions.

- When removing and inserting the memory card, always observe the ESD regulations.

Note

Data loss when the Control Unit with memory card is returned

When returning a defective Control Unit for repair or testing, the data on the memory card (parameters, firmware, licenses, etc.) could be lost.

- Do not return the memory card as well, but rather keep it in a safe place so that it can be inserted in the replacement unit.

Note

Please note that only SIEMENS memory cards can be used to operate the Control Unit.

4.8.2 Customer terminal module TM31 (-A60) (Option G60)

Note

Preassignment and position of the customer terminal block

The factory setting and description of the customer terminal blocks can be found in the circuit diagrams.

The location of the customer terminal block in the cabinet unit is indicated in the layout diagram.

Shield support

The shield connection of shielded control cables on the customer terminal block –A60 is established in the immediate vicinity of the terminal block. For this purpose, the customer terminal block –A60 and the mounting plates have cut-out sections which are used to snap the enclosed shield springs into place. The shields of incoming and outgoing cables must be applied directly to these shield connections. It is important here to establish the greatest possible area of contact and a good conductive connection.

Note

Shield springs

These shield springs can be used for all control cables in the cabinet unit because all the shield connections are identical in design.

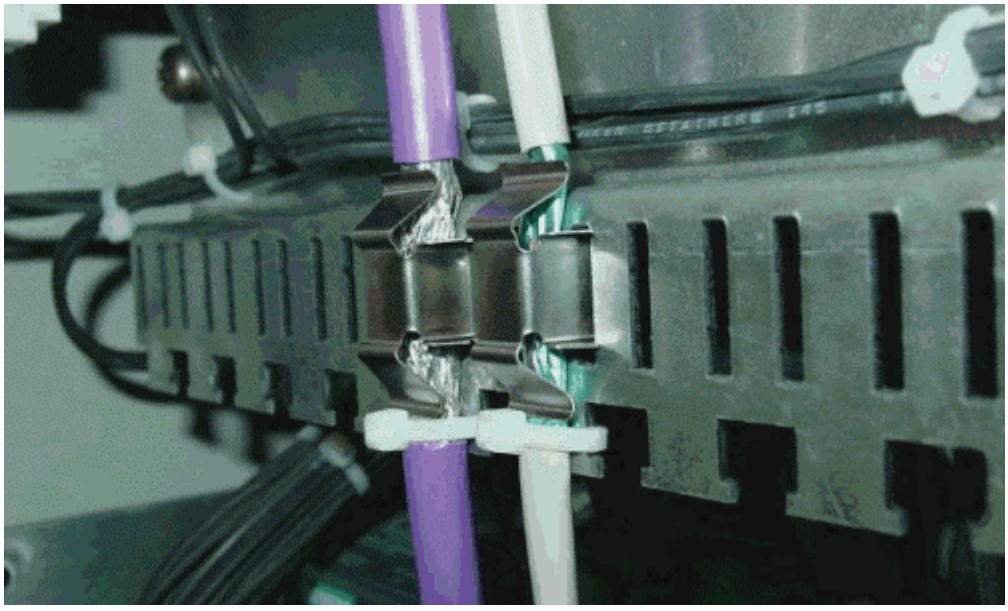

Figure 4-17 Shield support

Overview

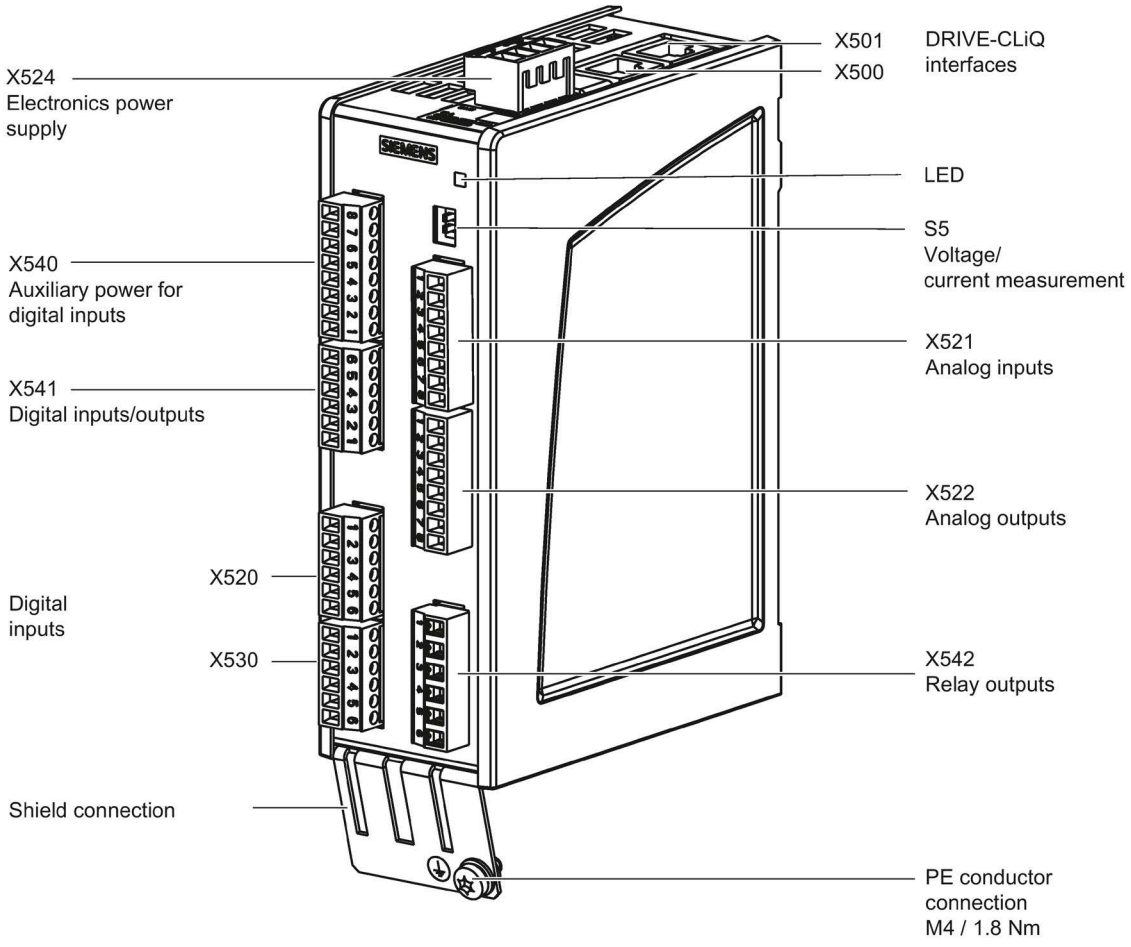

Figure 4-18 TM31 customer terminal block

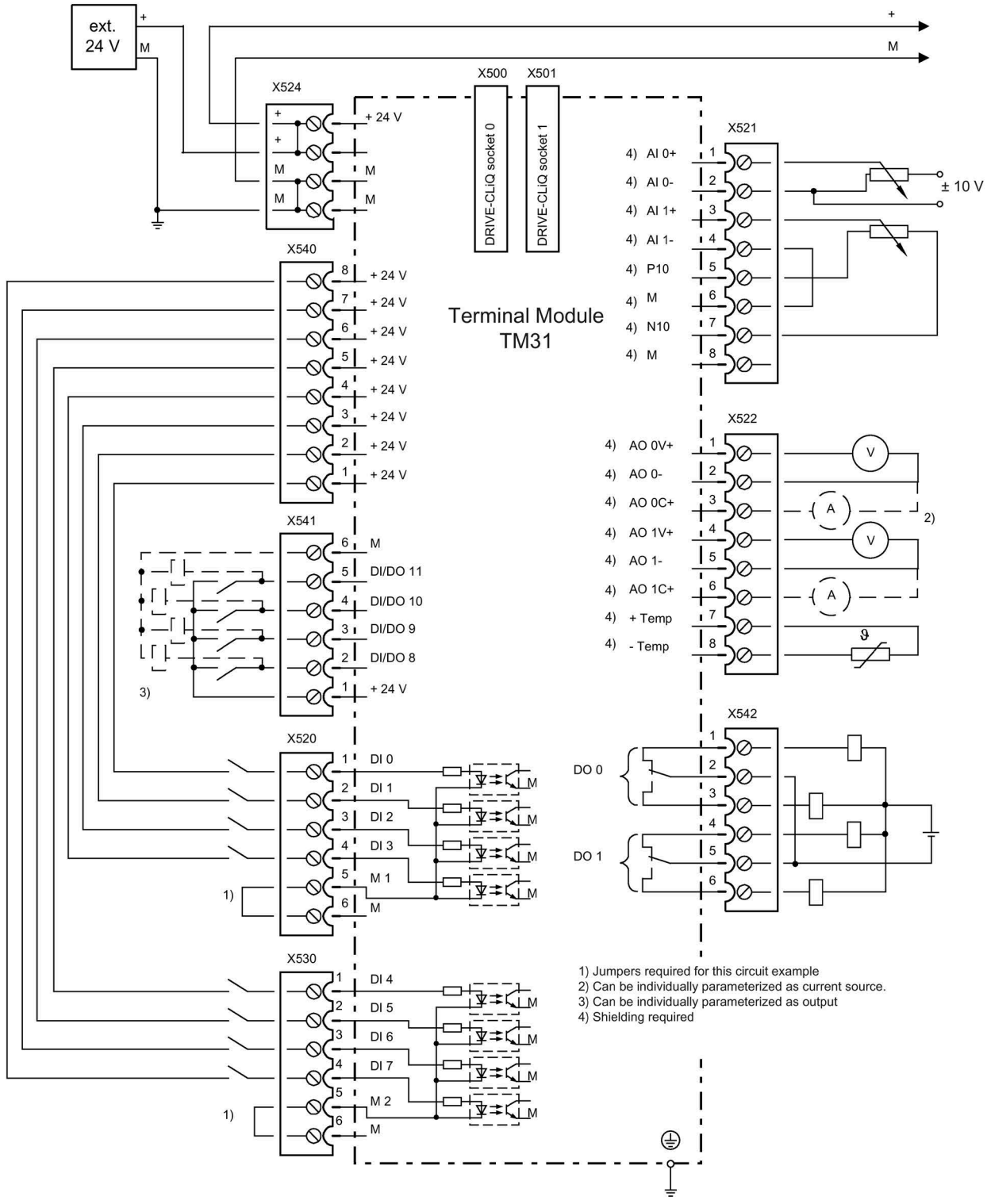

Figure 4-19 Connection overview of TM31 customer terminal block

X520: 4 digital inputs

Table 4- 20 Terminal block X520

Connector	Terminal	Designation [1]	Technical data
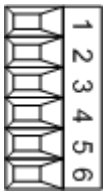	1	DI 0	**Voltage**: - 3 ... +30 V **Current consumption** typical: 10 mA at 24 V DC **Input delay**: for "0" to "1": Typ. 50 µs max. 100 µs for "1" to "0": Typ. 130 µs, max. 150 µs **Electrical isolation**: Reference potential is terminal M1 **Signal level** (including ripple) High level: 15 ... 30 V Low level: -3 ... +5 V
	2	DI 1	
	3	DI 2	
	4	DI 3	
	5	M1	
	6	M	
Max. connectable cross-section: 1.5 mm²			

[1] DI: digital input; M1: ground reference; M: Electronics ground

Note

Ensuring the function of digital inputs

An open input is interpreted as "low".

Terminal M1 must be connected so that the digital inputs (DI) can function.

This is achieved through one of the following measures:

1. Also route the reference ground of the digital inputs.
2. A jumper to terminal M. (**Note:** This removes the electrical isolation for these digital inputs.)

X530: 4 digital inputs

Table 4- 21 Terminal block X530

Connector	Terminal	Designation [1]	Technical data
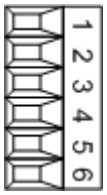	1	DI 4	**Voltage**: - 3 ... +30 V **Current consumption** typical: 10 mA at 24 V DC **Input delay**: For "0" to "1": Typ. 50 µs max. 100 µs for "1" to "0": Typ. 130 µs, max. 150 µs **Electrical isolation**: Reference potential is terminal M2 **Signal level** (including ripple) High level: 15 ... 30 V Low-level: -3 ... +5 V
	2	DI 5	
	3	DI 6	
	4	DI 7	
	5	M2	
	6	M	
Max. connectable cross-section: 1.5 mm²			

[1] DI: digital input; M2: ground reference; M: Electronics ground

Note

Ensuring the function of digital inputs

An open input is interpreted as "low".

To enable the digital inputs (DI) to function, terminal M2 must be connected.

This is achieved through one of the following measures:

1. Also route the reference ground of the digital inputs.
2. A jumper to terminal M. (**Note:** This removes the electrical isolation for these digital inputs.)

X521: 2 analog inputs (differential inputs)

Table 4- 22 Terminal block X521

Connector	Terminal	Designation [1]	Technical data
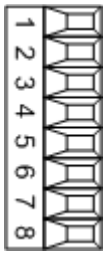	1	AI 0+	The analog inputs can be toggled between current and voltage input using switches S5.0 and S5.1. **As voltage input**: -10 ... +10 V; R_i > 100 kΩ Resolution: 11 bits + sign **As current input**: -20 ... +20 mA; R_i = 250 kΩ Resolution: 10 bits + sign
	2	AI 0-	
	3	AI 1+	
	4	AI 1-	
	5	P10	**Auxiliary voltage**: P10 = 10 V N10 = -10 V Continuously short-circuit proof
	6	M	
	7	N10	
	8	M	
Max. connectable cross-section: 1.5 mm²			

[1] AI: analog input; P10/N10: auxiliary voltage, M: Ground reference

NOTICE

Damage or malfunctions through impermissible voltage values

If a current exceeding ±35 mA flows through the analog current input, then the component could be destroyed.

The common mode range must not be violated in order to avoid incorrect analog-digital conversion results.

- The input voltage may only be in the range between -30 V and +30 V (destruction limit).
- The common mode voltage may only be in the range between -10 V and +10 V (error limit).
- The back EMF at the auxiliary voltage connections may only be in the range between -15 V and +15 V.

Note

The power supply for the analog inputs can be taken internally or from an external power supply unit.

S5: Selector for voltage/current AI0, AI1

Table 4- 23 Selector for voltage/current S5

	Switch	Function
	S5.0	Selector voltage (V) / current (I) AI0
	S5.1	Selector voltage (V) / current (I) AI1

Note

Delivery condition

When delivered, both switches are set to current measurement (switch set to "I").

X522: 2 analog outputs, temperature sensor connection

Table 4- 24 Terminal block X522

Connector	Terminal	Designation [1]	Technical data
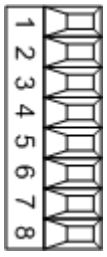	1	AO 0V+	You can set the following output signals using parameters: **Voltage**: -10 ... +10 V (max. 3 mA) **Current 1**: 4 ... 20 mA (max. load resistance ≤ 500 Ω) **Current 2**: -20 ... +20 mA (max. load resistance ≤ 500 Ω) **Current 3**: 0 ... 20 mA (max. load resistance ≤ 500 Ω) Resolution: 11 bits + sign Continuously short-circuit proof
	2	AO 0-	
	3	AO 0C+	
	4	AO 1V+	
	5	AO 1-	
	6	AO 1C+	
	7	+Temp [2]	Temperature sensor KTY84-1C130/PT1000/PTC Measuring current via temperature sensor connection: 2 mA
	8	-Temp[2]	
Max. connectable cross-section: 1.5 mm²			

[1] AO xV: analog output voltage; AO xC: Analog output current

[2] Accuracy of the temperature measurement:
- KTY: ±7 °C (including evaluation)
- PT1000: ±5 °C (PT1000 tolerance class B according to EN 60751 including evaluation)
- PTC: ±5 °C (including evaluation)

WARNING

Electric shock in the event of voltage flashovers at the temperature sensor

Voltage flashovers in the signal electronics can occur in motors without safe electrical separation of the temperature sensors.

- Use temperature sensors that fully comply with the specifications of the safety isolation.

NOTICE
Damage or malfunctions through impermissible voltage values If the back EMF is impermissible then damage and malfunctions may occur on the components. • The back EMF at the outputs may only be in the range between -15 V and +15 V.

NOTICE
Damage to motor in the event of incorrectly connected KTY temperature sensor If a KTY temperature sensor is connected with incorrect polarity, it is not possible to detect when the motor overheats. Overheating can cause damage to the motor. • Connect a KTY temperature sensor with the correct polarity.

X540: Joint auxiliary voltage for the digital inputs

Table 4- 25 Terminal block X540

Connector	Terminal	Designation	Technical data
	8	+24 V	Voltage: +24 V DC Max. total load current of +24 V auxiliary voltage for terminals X540 and X541 combined: 150 mA Continuously short-circuit proof
	7	+24 V	
	6	+24 V	
	5	+24 V	
	4	+24 V	
	3	+24 V	
	2	+24 V	
	1	+24 V	
Max. connectable cross-section: 1.5 mm²			

Note

Use of the power supply

This voltage supply is only for powering the digital inputs.

X541: 4 non-floating digital inputs/outputs

Table 4- 26 Terminal block X541

Connector	Terminal	Designation [1]	Technical data
	6	M	**Auxiliary voltage:** Voltage: +24 V DC Max. total load current of +24 V auxiliary voltage for terminals X540 and X541 combined: 150 mA **As input**: Voltage: -3 ... 30 V Power consumption, typical: 10 mA at 24 V DC Input delay: - for "0" to "1": Typ. 50 µs - For "1" to "0". Typ. 100 µs **As output**: Voltage: 24 V DC Max. load current per output: 500 mA Max. total current of outputs (including currents to the inputs): 100 mA / 1 A (can be parameterized) Continuously short-circuit proof **Output delay**: - For "0" to "1": Typ. 150 µs at 0.5 A resistive load (500 µs maximum) - For "1" to "0": Typically 50 µs at 0.5 A resistive load **Switching frequency**: - For resistive load: Max. 100 Hz - For inductive load: Max. 0.5 Hz - For lamp load: Max. 10 Hz Maximum lamp load: 5 W
	5	DI/DO 11	
	4	DI/DO 10	
	3	DI/DO 9	
	2	DI/DO 8	
	1	+24 V	
Max. connectable cross-section: 1.5 mm²			

[1] DI/DO: Digital input/output: M: Electronics ground

Note

Open input

An open input is interpreted as "low".

Note

If the 24 V supply is briefly interrupted, then the digital outputs are deactivated during this time.

X542: 2 relay outputs (two-way contact)

Table 4- 27 Terminal block X542

Connector	Terminal	Designation [1]	Technical data
	1	DO 0.NC	Contact type: Changeover contact max. load current: 8 A Max. switching voltage: 250 V_{AC}. 30 V_{DC} Max. Switching capacity at 250 V_{AC}: 2000 VA (cosϕ = 1) Max. Switching capacity at 250 V_{AC}: 750 VA (cosϕ = 0.4) Max. Switching capacity at 30 V_{DC}: 240 W (resistive load) Required minimum current: 100 mA Output delay: ≤ 20 ms [2] Overvoltage category: Class II acc. to EN 60664-1
	2	DO 0.COM	
	3	DO 0.NO	
	4	DO 1.NC	
	5	DO 1.COM	
	6	DO 1.NO	
Max. connectable cross-section: 2.5 mm²			

[1] DO: digital output, NO: normally-open contact, NC: normally-closed contact, COM: mid-position contact

[2] Depending on the parameterization and the supply voltage (P24) of the TM31

Note

Additional protective conductor

If 230 V AC is applied to the relay outputs, the Terminal Module must also be grounded via a 6 mm² protective conductor.

4.9 Other connections

Depending on the options installed, further connections have to be established, for example, dv/dt filter plus Voltage Peak Limiter, sine-wave filter, connection for external auxiliary equipment, main circuit-breaker including fuses or circuit-breaker, EMERGENCY OFF button, cabinet illumination with service socket, anti-condensation heating for cabinet, contactor combination (EMERGENCY OFF / EMERGENCY STOP), thermistor motor protection unit, braking unit, PT100 evaluation unit, insulation monitor, communication modules, encoder evaluator, and NAMUR option.

Detailed information on connecting individual options with interfaces can be found on the customer DVD supplied with the device.

4.9.1 Infeed module rated one level lower (option L04)

Description

With this option, an infeed (Active Line Module / Active Interface Module) rated one power level lower than the Motor Module (inverter) is used.

The option is suitable for the following applications, for example:

- If the Motor Module is operated with pulse frequencies greater than the rated pulse frequencies, thereby reducing the output power (current derating as a function of the pulse frequency).
- If the rated power is required in regenerative mode and the system losses are covered by the Motor Module.
- With motors that have a higher efficiency and/or a lower power factor compared to typical standard induction motors.
- The maximum current of the Motor Module is required below the maximum power of the unit, e.g. drives that have a high breakaway torque.

Availability

Option L04 is available for the following cabinet units:

Voltage [V]	Article number	Unit rating [kW]	Rated output current [A]
3 AC 380 ... 480	6SL3710-7LE33-1AA3	160	310
3 AC 380 ... 480	6SL3710-7LE35-0AA3	250	490
3 AC 380 ... 480	6SL3710-7LE36-1AA3	315	605
3 AC 380 ... 480	6SL3710-7LE37-5AA3	400	745
3 AC 380 ... 480	6SL3710-7LE41-0AA3	560	985

Constraint

Since the infeed is the element that limits the output power achievable when Option L04 is used, the following constraints must be observed:

- The rated output current of the Motor Module is available only as long as the infeed (Active Line Module) is not loaded at rated power.
- The output power is reduced proportional to the line voltage in the event of line supply undervoltage.
- The unit should be operated with a line power factor cos φ = 1 and should only provide the active power. An additional compensation of reactive line power is not expedient. This operating mode with cos φ = 1 corresponds to the factory setting.

Note

Shutdown in the event of an overload

If these restrictions are not heeded, a fault trip may occur in the event of an overload (of the infeed). To remedy this, adapt the current and/or torque limits in the Motor Module to match the infeed.

Commissioning

For offline commissioning with STARTER, option L04 must be selected in the options list. This ensures that a smaller infeed is selected during configuration.

Note

Consequences of not selecting option L04

Failing to select option L04 will produce inconsistencies and prevent downloading of the project to the drive object.

No additional settings are required for commissioning via the AOP30 when Option L04 is present.

Technical data

The technical data of the cabinet units are different when Option L04 is present.

Table 4- 28 Version with option L04, 3-phase 380 ... 480 V AC, part 1

Article number	6SL3710-	7LE33-1AA3	7LE35-0AA3	7LE36-1AA3
Unit rating				
- for I_L at 50 Hz 400 V 1)	kW	132	200	250
- for I_H at 50 Hz 400 V 1)	kW	110	160	200
- for I_L at 60 Hz 460 V 2)	hp	200	300	400
- for I_H at 60 Hz 460 V 2)	hp	175	250	300
Output current				
- Rated current $I_{N\,A}$ 3)	A	279 (310) 8)	416 (490) 8)	538 (605) 8)
- Base load current I_L 4)	A	271 (302) 8)	405 (477) 8)	525 (590) 8)
- Base load current I_H 5)	A	249 (277) 8)	372 (438) 8)	409 (460) 8)
- Max. current $I_{max\,A}$	A	407 (453) 8)	607 (715) 8)	787 (885) 8)
Infeed/regenerative current				
- Rated current $I_{N\,E}$ 6)	A	260	380	490
- Maximum current $I_{max\,E}$	A	390	570	735
Max. current requirement	A			
- Auxiliary 24 V DC supply		Internal	Internal	Internal
Supply voltages				
- Line voltage	V_{ACrms}	380 V 3 AC -10 % to 480 V 3 AC +10 % (-15 % < 1 min)		
- Line frequency	Hz	47 to 63 Hz		
- Electronic power supply	V_{DC}	24 (20.4 to 28.8)		
Power loss, max.				
- at 50 Hz, 400 V	kW	8.1	11.3	14.7
- at 60 Hz, 460 V	kW	8.54	11.82	15.56

Article number	6SL3710-	7LE33-1AA3	7LE35-0AA3	7LE36-1AA3
Cooling air requirement	m^3/s	0.83	1.19	1.61
Sound pressure level L_{pA} (1 m) at 50/60 Hz	dB(A)	72/74	72/74	73/75
Line connection - Recommended: IEC [7] - maximum: IEC - Fixing screw	 mm^2 mm^2	 2 x 95 4 x 240 M12 (2 holes)	 2 x 120 4 x 240 M12 (2 holes)	 2 x 240 4 x 240 M12 (2 holes)
Motor connection - Recommended: IEC [7] - maximum: IEC - Fixing screw	 mm^2 mm^2	 2 x 120 2 x 150 M12 (2 holes)	 2 x 185 2 x 240 M12 (2 holes)	 2 x 240 4 x 240 M12 (2 holes)
Protective conductor connection Fixing screw		M12 (2 holes)	M12 (2 holes)	M12 (2 holes)
Max. motor cable length shielded / unshielded	m	300 / 450	300 / 450	300 / 450
Dimensions (standard version L04) - Width - Height - Depth	 mm mm mm	 1400 2000 600	 1800 2000 600	 2000 2000 600
Frame sizes - Active Interface Module - Active Line Module - Motor Module		 FI FX GX	 GI GX GX	 GI GX HX
Weight (without options), approx.	kg	830	980	1220
Recommended protection - Line protection (with option L26) Rated current frame size to IEC 60269 - Line and semiconductor protection (without option L26) Rated current Frame size to IEC 60269	 A A	 3NA3254 355 2 3NE1331-2 350 2	 3NA3365 500 3 3NE1334-2 500 2	 3NA3472 630 3 3NE1436-2 630 3
Maximum short-circuit current I_{CC} acc. to IEC [9]	kA	65	50	50
Minimum short-circuit current [10]	kA	3	4.5	8

1) Rated output of a typical 6-pole standard induction motor based on I_L or I_H at 400 V 3 AC 50 Hz.

2) Rated output of a typical 6-pole standard induction motor based on I_L or I_H at 460 V 3 AC 60 Hz.

3) The currents are based on a line power factor of cos φ = 1.

4) The base-load current I_L is based on a duty cycle of 110% for 60 s or 150% for 10 s with a duty cycle duration of 300 s (see "Overload capability").

5) The base-load current I_H is based on a duty cycle of 150% for 60 s or 160% for 10 s with a duty cycle duration of 300 s (see "Overload capability").

6) The current values given here are based on the rated output current.

7) The recommendations for the North American market in AWG or MCM must be taken from the appropriate NEC (National Electrical Code) or CEC (Canadian Electrical Code) standards.

8) Current for type rating
The possible output current of the inverter is stated in brackets.

9) In conjunction with the specified fuses or circuit breakers.

10) Minimum current required for reliably triggering protective devices.

Table 4- 29 Version with option L04, 3-phase 380 ... 480 V AC, part 2

Article number	6SL3710-	7LE37-5AA3	7LE41-0AA3	
Unit rating - for I_L at 50 Hz 400 V [1)] - for I_H at 50 Hz 400 V [1)] - for I_L at 60 Hz 460 V [2)] - for I_H at 60 Hz 460 V [2)]	 kW kW hp hp	 315 250 500 350	 450 400 700 600	
Output current - Rated current $I_{N\,A}$ [3)] - Base load current I_L [4)] - Base load current I_H [5)] - Max. current $I_{max\,A}$	 A A A A	 655 (745) [8)] 638 (725) [8)] 501 (570) [8)] 956 (1087) [8)]	 925 (985) [8)] 902 (960) [8)] 808 (860) [8)] 1353 (1440) [8)]	
Infeed/regenerative current - Rated current $I_{N\,E}$ [6)] - Maximum current $I_{max\,E}$	 A A	 605 907	 840 1260	
Max. current requirement - Auxiliary 24 V DC supply	A	 Internal	 Internal	
Supply voltages - Line voltage - Line frequency - Electronic power supply	 V_{ACrms} Hz V_{DC}	 380 V 3 AC -10 % to 480 V 3 AC +10 % (-15 % < 1 min) 47 to 63 Hz 24 (20.4 to 28.8)		
Power loss, max. - at 50 Hz, 400 V - at 60 Hz, 460 V	 kW kW	 18.53 19.65	 23.45 24.85	
Cooling air requirement	m^3/s	1.96	2.28	
Sound pressure level L_{pA} (1 m) at 50/60 Hz	dB(A)	77/79	77/79	
Line connection - Recommended: IEC [7)] - maximum: IEC - Fixing screw	 mm^2 mm^2	 2 x 240 4 x 240 M12 (2 holes)	 4 x 150 8 x 240 M12 (4 holes)	
Motor connection - Recommended: IEC [7)] - maximum: IEC - Fixing screw	 mm^2 mm^2	 2 x 300 4 x 240 M12 (2 holes)	 4 x 185 6 x 240 M12 (3 holes)	
Protective conductor connection Fixing screw		 M12 (10 holes)	 M12 (18 holes)	
Max. motor cable length shielded / unshielded	m	300 / 450	300 / 450	
Dimensions (standard version L04) - Width - Height - Depth	 mm mm mm	 2200 2000 600	 2400 2000 600	
Frame sizes - Active Interface Module - Active Line Module - Motor Module		 HI HX HX	 HI HX JX	
Weight (without options), approx.	kg	1716	2040	

Article number	6SL3710-	7LE37-5AA3	7LE41-0AA3	
Recommended protection - Line protection (with option L26) Rated current frame size to IEC 60269 - Line and semiconductor protection (without option L26) Rated current Frame size to IEC 60269	 A A	 3NA3475 800 4 3NE1438-2 800 3	 Circuit breaker Circuit breaker	
Maximum short-circuit current I_{CC} acc. to IEC [8]	kA	50	55	
Minimum short-circuit current [9]	kA	12	2	

[1] Rated output of a typical 6-pole standard induction motor based on I_L or I_H at 400 V 3 AC 50 Hz.

[2] Rated output of a typical 6-pole standard induction motor based on I_L or I_H at 460 V 3 AC 60 Hz.

[3] The currents are based on a line power factor of cos φ = 1.

[4] The base-load current I_L is based on a duty cycle of 110% for 60 s or 150% for 10 s with a duty cycle duration of 300 s (see "Overload capability").

[5] The base-load current I_H is based on a duty cycle of 150% for 60 s or 160% for 10 s with a duty cycle duration of 300 s (see "Overload capability").

[6] The current values given here are based on the rated output current.

[7] The recommendations for the North American market in AWG or MCM must be taken from the appropriate NEC (National Electrical Code) or CEC (Canadian Electrical Code) standards.

[8] Current for type rating
The possible output current of the inverter is stated in brackets.

[9] In conjunction with the specified fuses or circuit breakers.

[10] Minimum current required for reliably triggering protective devices.

4.9.2 dV/dt filter compact plus Voltage Peak Limiter (Option L07)

Description

The dv/dt filter compact plus Voltage Peak Limiter comprises two components: the dv/dt reactor and the voltage-limiting network (Voltage Peak Limiter), which cuts off the voltage peaks and feeds back the energy into the DC link. The dv/dt filter compact plus Voltage Peak Limiter is designed for use with motors for which the voltage strength of the insulation system is unknown or insufficient.

dv/dt filters compact plus Voltage Peak Limiters limit the voltage rate of rise dv/dt to values < 1600 V/µs - and the typical voltage peaks to the following values according to limit value curve A acc. to IEC 60034-25:2007:

- < 1150 V at U_{line} < 575 V
- < 1400 V at 660 V < U_{line} < 690 V.

Restrictions

The following constraints should be noted when a dv/dt filter compact plus Voltage Peak Limiter is used:

- The output frequency is limited to no more than 150 Hz.
- Maximum permissible motor cable lengths:
  - Shielded cable: max. 100 m
  - Unshielded cable: max. 150 m

NOTICE

Damage to the dv/dt filter compact by exceeding the maximum output frequency

The maximum permissible output frequency when a dv/dt filter compact is used is 150 Hz. The dv/dt filter compact can be damaged if the output frequency is exceeded.

- Operate the dv/dt filter compact with a maximum output frequency of 150 Hz.

NOTICE

Damage to the dv/dt filter compact during continuous operation with low output frequencies

Uninterrupted duty at an output frequency less than 10 Hz can result in thermal overload and destroy the dv/dt filter.

- When using a dv/dt filter compact plus voltage peak limiter do not operate the drive continuously with an output frequency less than 10 Hz.
- You may operate the drive for a maximum load duration of 5 minutes at an output frequency less than 10 Hz, provided that you then select an operation with an output frequency higher than 10 Hz for a period of 5 minutes.

NOTICE

Damage to the dv/dt filter compact by exceeding the maximum pulse frequency

The maximum permissible pulse frequency when a dv/dt filter compact is used is 2.5 kHz or 4 kHz. The dv/dt filter compact can be damaged if the pulse frequency is exceeded.

- When using the dv/dt filter compact, only operate the Motor Module with a maximum pulse frequency of 2.5 kHz or 4 kHz.

NOTICE

Damage to the dv/dt filter compact if it is not activated during commissioning

The dv/dt filter compact may be damaged if it is not activated during commissioning.

- Activate the dv/dt filter compact during commissioning using parameter p0230 = 2.

NOTICE

Damage to the dv/dt filter compact if a motor is not connected

dv/dt filters compact which are operated without a motor being connected can be damaged or destroyed.

- Never operate a dv/dt filter compact connected to the Motor Module without a connected motor.

Note

Setting pulse frequencies

It is permissible to set pulse frequencies in the range between the rated pulse frequency and the relevant maximum pulse frequency when a dv/dt filter compact plus Voltage Peak Limiter is deployed. "Current derating as a function of the pulse frequency" of the converter must be observed here (refer to the Technical data).

Table 4- 30 Max. pulse frequency when a dv/dt filter compact plus Voltage Peak Limiter is deployed in units with a rated pulse frequency of 2 kHz

Article no. 6SL3710-...	Unit rating [kW]	Output current for a pulse frequency of 2 kHz [A]	Max. pulse frequency when a dv/dt filter compact plus Voltage Peak Limiter is deployed
Supply voltage 380 to 480 V AC, 3 phase			
7LE32-1AA3	110	210	4 kHz
7LE32-6AA3	132	260	4 kHz
7LE33-1AA3	160	310	4 kHz
7LE33-8AA3	200	380	4 kHz
7LE35-0AA3	250	490	4 kHz

Table 4- 31 Max. pulse frequency when a dv/dt filter compact plus Voltage Peak Limiter is deployed in units with a rated pulse frequency of 1.25 kHz

Article no. 6SL3710-...	Unit rating [kW]	Output current for a pulse frequency of 1.25 kHz [A]	Max. pulse frequency when a dv/dt filter compact plus Voltage Peak Limiter is deployed
Supply voltage 380 to 480 V AC, 3 phase			
7LE36-1AA3	315	605	2.5 kHz
7LE37-5AA3	400	745	2.5 kHz
7LE38-4AA3	450	840	2.5 kHz
7LE41-0AA3	560	985	2.5 kHz
7LE41-4AA3	710	1380	2.5 kHz
7LE41-4AA3	800	1405	2.5 kHz
Supply voltage 3 AC 500 ... 690 V			
7LG28-5AA3	75	85	2.5 kHz
7LG31-0AA3	90	100	2.5 kHz
7LG31-2AA3	110	120	2.5 kHz
7LG31-5AA3	132	150	2.5 kHz
7LG31-8AA3	160	175	2.5 kHz
7LG32-2AA3	200	215	2.5 kHz
7LG32-6AA3	250	260	2.5 kHz
7LG33-3AA3	315	330	2.5 kHz
7LG34-1AA3	400	410	2.5 kHz
7LG34-7AA3	450	465	2.5 kHz
7LG35-8AA3	560	575	2.5 kHz
7LG37-4AA3	710	735	2.5 kHz
7LG38-1AA3	800	810	2.5 kHz
7LG38-8AA3	900	910	2.5 kHz
7LG41-0AA3	1000	1025	2.5 kHz
7LG41-3AA3	1200	1270	2.5 kHz

Commissioning

During commissioning, the dv/dt filter compact plus Voltage Peak Limiter must be logged on using STARTER or the AOP30 operator panel (p0230 = 2).

Note

Reset when establishing the factory setting

When the factory settings are restored, parameter p0230 is reset.
The parameter must be reset if the system is commissioned again.

4.9.3 dv/dt filter plus Voltage Peak Limiter (option L10)

Description

The du/dt filter plus Voltage Peak Limiter comprises two components: the du/dt reactor and the **V**oltage **P**eak **L**imiter, which cuts off the voltage peaks and returns the energy to the DC link.

The du/dt filters plus Voltage Peak Limiter must be used for motors for which the proof voltage of the insulation system is unknown or insufficient. Standard motors of the 1LA5, 1LA6 and 1LA8 series only require them at supply voltages > 500 V +10%.

The dv/dt filter plus Voltage Peak Limiter limits the rate of voltage rise to values < 500 V/µs and the typical voltage peaks to the values below (with motor cable lengths of < 150 m):

- < 1000 V at U_{line} < 575 V
- < 1250 V at 660 V < U_{line} < 690 V.

Depending on the converter power, option L10 can be accommodated in the drive converter cabinet unit or an additional cabinet with a width of 400 mm or 600 mm is required.

Table 4- 32 Accommodating the voltage limiting network in the cabinet or in an additional cabinet

Voltage range	Installation of the du/dt filter plus Voltage Peak Limiter within the converter cabinet unit	Installation of the VPL in an additional cabinet, 400 mm width	Installation of the VPL in an additional cabinet, 600 mm width
3 AC 380 ... 480 V	6SL3710-7LE32-1AA3 6SL3710-7LE32-6AA3 6SL3710-7LE33-1AA3 6SL3710-7LE33-8AA3 6SL3710-7LE35-0AA3	6SL3710-7LE36-1AA3 6SL3710-7LE37-5AA3 6SL3710-7LE38-4AA3	6SL3710-7LE41-0AA3 6SL3710-7LE41-2AA3 6SL3710-7LE41-4AA3
3 AC 500 ... 690 V	6SL3710-7LG28-5AA3 6SL3710-7LG31-0AA3 6SL3710-7LG31-2AA3 6SL3710-7LG31-5AA3 6SL3710-7LG31-8AA3 6SL3710-7LG32-2AA3 6SL3710-7LG32-6AA3 6SL3710-7LG33-3AA3	6SL3710-7LG34-1AA3 6SL3710-7LG34-7AA3 6SL3710-7LG35-8AA3	6SL3710-7LG37-4AA3 6SL3710-7LG38-1AA3 6SL3710-7LG38-8AA3 6SL3710-7LG41-0AA3 6SL3710-7LG41-3AA3

Restrictions

The following restrictions should be noted when a du/dt filter plus Voltage Peak Limiter is used:

- The output frequency is limited to a maximum of 150 Hz.
- Maximum permissible motor cable lengths:
  - Shielded cable: max. 300 m
  - Unshielded cable: max. 450 m

NOTICE

Damage to the du/dt filter by exceeding the maximum output frequency

The maximum permissible output frequency when using a du/dt filter is 150 Hz. The du/dt filter can be damaged if the output frequency is exceeded.

- Operate the dv/dt filter with a maximum output frequency of 150 Hz.

NOTICE

Damage to the du/dt filter by exceeding the maximum pulse frequency

The maximum permissible pulse frequency when using a du/dt filter is 2.5 kHz or 4 kHz. The du/dt filter can be damaged if the pulse frequency is exceeded.

- When using the dv/dt filter, operate the Motor Module with a maximum pulse frequency of 2.5 kHz or 4 kHz.

NOTICE

Damage to the du/dt filter if it is not activated during commissioning

The du/dt filter may be damaged if it is not activated during commissioning.

- Activate the du/dt filter during commissioning using parameter p0230 = 2.

NOTICE

Damage to the du/dt filter if a motor is not connected

du/dt filters which are operated without a motor being connected can be damaged or destroyed.

- Never operate a du/dt filter connected to the Motor Module without a connected motor.

Note

Setting pulse frequencies

It is permissible to set pulse frequencies in the range between the rated pulse frequency and the relevant maximum pulse frequency when a du/dt filter plus Voltage Peak Limiter is used. When so doing, take into account the "Current derating as a function of the pulse frequency; see Technical data.

Table 4- 33 Max. pulse frequency when a du/dt filter plus Voltage Peak Limiter is used in units with a rated pulse frequency of 2 kHz

Article no. 6SL3710-...	Unit rating [kW]	Output current for a pulse frequency of 2 kHz [A]	Max. pulse frequency when a du/dt filter plus Voltage Peak Limiter is used
Supply voltage 380 to 480 V AC, 3 phase			
7LE32-1AA3	110	210	4 kHz
7LE32-6AA3	132	260	4 kHz
7LE33-1AA3	160	310	4 kHz
7LE33-8AA3	200	380	4 kHz
7LE35-0AA3	250	490	4 kHz

Table 4- 34 Max. pulse frequency when a du/dt filter plus Voltage Peak Limiter is used in units with a rated pulse frequency of 1.25 kHz

Article no. 6SL3710-...	Unit rating [kW]	Output current for a pulse frequency of 1.25 kHz [A]	Max. pulse frequency when a du/dt filter plus Voltage Peak Limiter is used
Supply voltage 380 to 480 V AC, 3 phase			
7LE36-1AA3	315	605	2.5 kHz
7LE37-5AA3	400	745	2.5 kHz
7LE38-4AA3	450	840	2.5 kHz
7LE41-0AA3	560	985	2.5 kHz
7LE41-4AA3	710	1380	2.5 kHz
7LE41-4AA3	800	1405	2.5 kHz
Supply voltage 3 AC 500 ... 690 V			
7LG28-5AA3	75	85	2.5 kHz
7LG31-0AA3	90	100	2.5 kHz
7LG31-2AA3	110	120	2.5 kHz
7LG31-5AA3	132	150	2.5 kHz
7LG31-8AA3	160	175	2.5 kHz
7LG32-2AA3	200	215	2.5 kHz
7LG32-6AA3	250	260	2.5 kHz
7LG33-3AA3	315	330	2.5 kHz
7LG34-1AA3	400	410	2.5 kHz
7LG34-7AA3	450	465	2.5 kHz
7LG35-8AA3	560	575	2.5 kHz
7LG37-4AA3	710	735	2.5 kHz
7LG38-1AA3	800	810	2.5 kHz
7LG38-8AA3	900	910	2.5 kHz
7LG41-0AA3	1000	1025	2.5 kHz
7LG41-3AA3	1200	1270	2.5 kHz

Commissioning

During commissioning, the dv/dt filter plus Voltage Peak Limiter must be logged on using STARTER or the AOP30 operator panel (p0230 = 2).

Note

Reset when establishing the factory setting

When the factory settings are restored, parameter p0230 is reset.
The parameter must be reset if the system is commissioned again.

4.9.4 Sinusoidal filter (option L15)

Description

The sine-wave filter limits the voltage gradient and the capacitive charge/discharge currents which usually occur with converter operation. It also prevents additional noise caused by the pulse frequency. The service life of the motor is as long as that attained with direct mains operation.

Restrictions

The following restrictions must be taken into account when a sine-wave filter is used:

- The output frequency is limited to no more than 150 Hz.
- The modulation type is permanently set to space-vector modulation without overmodulation.
- The maximum output frequency is limited to 85% of the input frequency.
- Maximum permissible motor cable lengths:
  - Unshielded cable: max. 450 m
  - Shielded cable: max. 300 m
- During commissioning, the pulse frequency rises to double the factory setting. This induces current derating, which must be applied to the cabinet unit rated currents listed in the technical data.

NOTICE

Damage to the Motor Module by using components that have not been released

When using components that have not been released, damage or malfunctions can occur at the devices or the system itself.

- Only use sine-wave filters that SIEMENS has released for SINAMICS.

NOTICE

Risk of damaging sine-wave filter by exceeding the maximum output frequency

The maximum permissible output frequency when sine-wave filters are used is 150 Hz. The sine-wave filter can be damaged if the output frequency is exceeded.

- Operate the sine-wave filter with a maximum output frequency of 150 Hz.

NOTICE

Damage to the sine-wave filter if it is not activated during commissioning

The sine-wave filter may be damaged if it is not activated during commissioning.

- Activate the sine-wave filter during commissioning via parameter p0230 = 3.

NOTICE

Damage to the sine-wave filter if a motor is not connected

Sine-wave filters, which are operated without a motor being connected, can be damaged or destroyed.

- Never operate a sine-wave filter connected to the Motor Module without a connected motor.

Note

No sine-wave filter possible

If a sine-wave filter cannot be parameterized (p0230 ≠ 3), this means that a filter has not been provided for the cabinet unit. In this case, the cabinet unit must not be operated with a sine-wave filter.

Table 4- 35 Technical specifications for sine-wave filters with SINAMICS S150

Article no. SINAMICS S150	Voltage [V]	Pulse frequency [kHz]	Output current [A] [1)]
6SL3710-7LE32-1AA3	3 AC 380 ... 480	4	172 A
6SL3710-7LE32-6AA3	3 AC 380 ... 480	4	216 A
6SL3710-7LE33-1AA3	3 AC 380 ... 480	4	273 A
6SL3710-7LE33-8AA3	3 AC 380 ... 480	4	331 A
6SL3710-7LE35-0AA3	3 AC 380 ... 480	4	382 A

[1)] The values apply to operation with a sine-wave filter and do not correspond with the rated current on the type plate.

Commissioning

When commissioning using the STARTER or AOP30, the sine-wave filter must be activated by means of appropriate selection screen forms or dialog boxes (p0230 = 3), see section "Commissioning".

The following parameters are changed automatically during commissioning.

Table 4- 36 Parameter settings for sine-wave filters

Parameters	Name	Setting
p0230	Drive filter type, motor side	3: Siemens sine-wave filter
p0233	Power unit motor reactor	Filter inductance
p0234	Power unit sine-wave filter capacitance	Filter capacitance
p0290	Power unit overload response	Disable pulse frequency reduction
p1082	Maximum speed	Fmax filter / pole pair number
p1800	Pulse frequency	Nominal pulse frequency of the filter (see previous table)
p1802	Modulator mode	Space-vector modulation without over-modulation
p1811	Pulse frequency wobbling amplitude	Amplitude of the statistical wobbulation signal
p1909	Motor data identification, control word	Rs measurement only

Note

Reset when establishing the factory setting

When the factory settings are restored, parameter p0230 is reset.
The parameter must be reset if the system is commissioned again.

4.9.5 Connection for external auxiliary equipment (Option L19)

Description

This option includes an outgoing circuit fused at max. 10 A for external auxiliary equipment (e.g. separately-driven fan for motor). The voltage is tapped at the converter input upstream of the main contactor/circuit-breaker and, therefore, has the same level as the supply voltage. The outgoing circuit can be switched within the converter or externally.

Connecting

Table 4- 37 Terminal block X155 - Connection for external auxiliary equipment

Terminal	Designation [1]	Technical data
1	L1	3 AC 380 ... 480 V 3 AC 500 ... 690 V
2	L2	
3	L3	
11	Contactor control	230 V AC
12		
13	NO: Checkback motor circuit breaker	230 V AC / 0.5 A 24 V DC / 2 A
14		
15	NO: Checkback from contactor	240 V AC / 6 A
16		
PE	PE	PE
Max. connectable cross-section: 4 mm²		

[1] NO: NO contact

Note

Protection setting

The connection for external auxiliary equipment must be set in accordance with the connected load (-Q155).

Circuit proposal for controlling the auxiliary contactor from within the converter

Circuit proposal as standard

A free digital output of the Control Unit can be used to control the auxiliary contactor; it uses a line-side relay to control auxiliary contactor -K155.

Signal r0899.11 (pulses enabled) must also be interconnected to the selected digital output of the Control Unit.

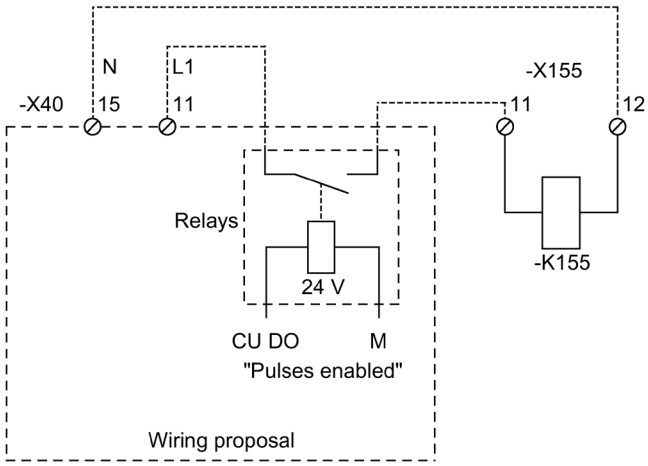

Figure 4-20 Circuit proposal for control via the Control Unit

Circuit proposal with customer terminal module TM31 (option G60)

The following circuit proposal can be used to control the auxiliary contactor for example. The "Pulses enabled" signal at terminal-X542 of the TM31 is then no longer available for other purposes.

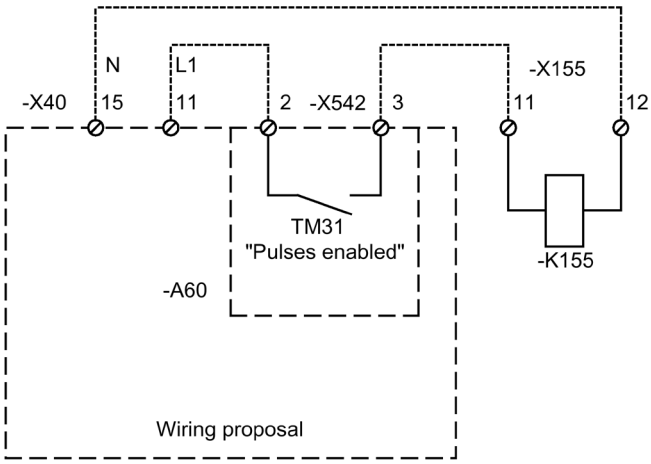

Figure 4-21 Circuit proposal for control via the TM31

Note

Additional protective conductor

If 230 V AC is applied to the relay outputs, the TM31 must also be grounded via a 6 mm² protective conductor.

4.9.6 Overvoltage limitation (option L21)

Description

The option includes the installation of surge arresters and upstream fuses for each line phase. The signaling contacts of the surge arresters are connected in series for monitoring purposes and routed to a customer interface.

Safety instruction

Note

Remove the connection clip for the interference-suppression capacitor for operation on an IT supply

For operation on an IT supply, the connection clip for the interference suppression capacitor must be removed (see "Electrical installation / removing the connection clip for the interference suppression capacitor for operation on a non-grounded supply system (IT supply)").

X700 - monitoring the surge arresters

Table 4- 38 Terminal block X700 Monitoring the surge arresters

Terminal	Designation [1]	Technical data
1	NC	Max. load current: - at 24 V DC: 1 A - At 230 VAC: 0.5 A
4	NC	
Max. connectable cross-section: 2.5 mm²		

[1] NC: normally-closed contact

Reason why the monitoring responded

After the monitoring function responds at terminal block X700:1/4, the cause must be identified:

- Surge arresters (-A703, -A704-, A705) have a display showing the operating state.
- The upstream fuses (-Q700) are monitored using phase failure monitoring (-B700), which has an LED status display. In the event of a fault as a result of a defective fuse, the fuses (-Q700) must be checked, and if required, replaced after removing the fault.

Replacement of the surge arresters

In the event of a fault, the surge arresters must be replaced:

- Cabinet units 3-phase 380 ... 480 VAC:
  Remove the insert (protection module) by withdrawing the defective insert and inserting the replacement part.
- Cabinet units 3-phase 500 ... 690 VAC:
  Replace the complete surge arrester.

4.9.7 Main switch incl. fuses or main circuit breaker (option L26)

Description

For rated currents up to 800 A, a switch disconnector with externally-mounted fuses is used as the main switch. For rated currents above 800 A, the standard circuit breaker is used to disconnect the voltage and provide overload and short-circuit protection. The circuit breaker is controlled and supplied within the converter.

NOTICE

Material damage caused by switching on too frequently

The cabinet unit can be damaged if it is switched on too frequently.

- Do not switch on the cabinet unit more frequently than every 3 minutes.

Connecting

Table 4- 39 Terminal block X50 - checkback contact "main switch closed"

Terminal	Designation [1]	Technical data
1	NO	Max. load current: 10 A Max. switching voltage: 250 V AC Max. switching capacity: 250 VA Required minimum load: ≥ 1 mA
2	NC	
3	COM	
Max. connectable cross-section: 4 mm²		

[1] NO: normally-open contact, NC: normally-closed contact, COM: mid-position contact

WARNING

Dangerous voltage as a result of external auxiliary supply

When the external auxiliary supply is connected, dangerous voltages are present in the cabinet unit even when the main switch is open. Death or serious injury can result when live parts are touched.

- Observe the general safety rules when working on the device.

4.9.8 Line filter monitoring (option L40)

Description

The line filter monitoring option is used for monitoring the filter in the Active Interface Module for effectiveness against harmonic effects on the system.

By measuring the current and voltage in the Active Interface Module, the capacitance of the filter capacitors of the integrated filter is continuously calculated and compared with the installed nominal capacitance.

Alarm A06250 is triggered if the calculated capacitance is higher than the set comparison threshold.

Commissioning

To activate the comparison threshold of the nominal capacitance of the particular Active Interface Module, you must use a script. This automatically sets the corresponding parameters in STARTER.

The script "Option_L40_deu.txt" in German or "Option_L40_engl.txt" in English is provided on the customer DVD supplied with the device.

Inserting the script into the STARTER project:

1. Select the Infeed unit symbol in the STARTER project using the right mouse key, select "Expert" – "Insert script folder".
   The "SCRIPTS" folder is inserted.
2. Select the "SCRIPTS" folder using the right mouse key, select "Export/import" –"ASCII import..." and select the script "Option_L40_deu.txt" or "Option_L40_eng.txt".
   Script "Option_L40" is inserted after acknowledging the following screen form.
3. Select script "Option_L40" using the right mouse key and then select "Accept and execute".

After the script has been successfully executed, message "L40 option successfully parameterized!" is output.

If the message "No ALM/line filter found! The script execution was interrupted" or "Only for ALM", appears, then the script is in the incorrect folder, or an unknown Active Interface module was found.

Alarm A06250 is output

If alarm A06250 "Infeed: Defective capacitor(s) in at least one phase of line filter" is output, there is a risk that the line harmonics no longer correspond to the original nominal values. As a consequence, sensitive devices that are connected to the same line connection point could be damaged.

Contact the Siemens AG hotline within the next 4 weeks.

4.9.9 EMERGENCY OFF pushbutton installed in the cabinet door (option L45)

Description

The EMERGENCY OFF pushbutton with protective collar is integrated in the door of the cabinet unit. The contacts of the pushbutton are connected to terminal block –X120. In conjunction with options L57, L59, and L60, EMERGENCY OFF of category 0 and EMERGENCY STOP of category 1 can be activated.

Note

Pressing the EMERGENCY OFF button

When the EMERGENCY OFF pushbutton is pressed, the motor coasts to a standstill and the main motor voltage is disconnected (to EN 60204-1 (VDE 0113)) in conjunction with options L57, L59 and L60. Auxiliary voltages (e.g. for separately-driven fans or anti-condensation heating) may still be present. Certain sections of the converter (e.g., the closed-loop controller or any auxiliary equipment) may also remain live. If all the voltages have to be completely disconnected, the EMERGENCY OFF pushbutton must be integrated in a protection concept, which must be implemented on the line side. For this purpose, an NC contact is installed at terminal block -X120.

Connecting

Table 4- 40 Terminal block X120 –checkback contact "EMERGENCY OFF pushbutton in the cabinet door"

Terminal	Designation [1]	Technical data
1	NC 1	Checkback contacts of EMERGENCY OFF pushbutton in cabinet door Max. load current: 10 A Max. switching voltage: 250 V AC Max. switching capacity: 250 VA Required minimum load: ≥ 1 mA
2		
3	NC 2 [2]	
4		
Max. connectable cross-section: 4 mm^2		

[1] NC: Normally-closed contact

[2] Factory setting in converter for options L57, L59, and L60

4.9.10 Cabinet illumination with service socket (option L50)

Description

With option L50, cabinet lighting and an additional service socket outlet is included for grounding plug (connector type F) according to CEE 7/4. The power supply for the cabinet lighting and the service socket is external and must be fuse-protected for max. 10 A.

The cabinet lighting consists of an LED hand lamp with On/Off switch and with magnetic fasteners on an approx. 3 m long connecting cable. In the as-delivered condition, the flashlight is already positioned at the defined marks in the cabinet door and the connecting cable is wound on the holder.

Note

During operation of the cabinet unit, the cabinet lighting must remain attached in its position on the cabinet door. The position on the cabinet door is marked by an adhesive label. The connecting cable must be wound on its holder.

Connection

Table 4- 41 Terminal block X390 – connection for cabinet lighting with service socket

Terminal	Designation	Technical data
1	L1	230 V AC power supply
2	N	
3	PE	Protective conductor
Max. connectable cross-section: 4 mm²		

4.9.11 Cabinet anti-condensation heating (option L55)

Description

The anti-condensation heating is used at low ambient temperatures and high levels of humidity to prevent condensation forming.

One 100 W heater is installed for a 400 mm and 600 mm cabinet panel, and two 100 W heaters for an 800/1000 and 1200 mm cabinet panel. The power supply (110 to 230 V AC) must be provided externally and protected with a fuse of up to 16 A.

WARNING

Dangerous voltage as a result of external auxiliary supply

When the external supply voltage for the cabinet anti-condensation heating is connected, dangerous voltages are present in the cabinet unit even when the main switch is open. Death or serious injury can result when live parts are touched.

- Observe the general safety rules when working on the device.

CAUTION

Burns caused by hot cabinet anti-condensation heating surfaces

In operation, the cabinet anti-condensation heating can reach high temperatures, which can cause burns if touched.

- Allow the cabinet anti-condensation heating to cool down before starting any work.
- Use the appropriate personnel protection equipment, e.g. gloves.

Note

Provide a temperature-controlled supply voltage

The supply voltage can be provided using a temperature control to avoid unnecessarily operating the anti-condensation heating for higher ambient temperatures.

Connecting

Table 4- 42 Terminal block X240 – connection for cabinet anti-condensation heating

Terminal	Designation	Technical data
1	L1	110 to 230 V AC Power supply
2	N	
3	PE	Protective conductor
Max. connectable cross-section: 4 mm²		

4.9.12 EMERGENCY OFF category 0; 230 V AC or 24 V DC (option L57)

Description

EMERGENCY OFF category 0 for uncontrolled stop to EN 60204-1. This function disconnects the cabinet unit from the power supply via the line contactor, while bypassing the electronics by means of a safety combination according to EN 60204-1. The motor coasts down. To prevent the main contactor from switching under load, an OFF2 is triggered simultaneously.

No additional wiring is needed when using the EMERGENCY OFF pushbutton.

The operational status is indicated by means of three LEDs (-K120).

When delivered, the type with 230 V AC pushbutton circuit is set.

Note

Pressing the EMERGENCY OFF button

When the EMERGENCY OFF pushbutton is pressed, an uncontrolled stop of the motor takes place and the main motor voltage is disconnected in accordance with EN 60204-1. Auxiliary voltages (e.g. for separately-driven fans or anti-condensation heating) may still be present. Certain sections of the converter (e.g., the closed-loop controller or any auxiliary equipment) also remain live. If all the voltages have to be completely disconnected, the EMERGENCY OFF pushbutton must be integrated in a protection concept, which must be implemented on the line side. For this purpose, an NC contact is installed at terminal -X120.

Connecting

Table 4- 43 Terminal block X120 – connection for EMERGENCY OFF category 0, 230 V AC and 24 V DC

Terminal	230 V AC and 24 V DC button circuit
4	Jumper wired in the factory
5	
7	Loop in EMERGENCY OFF button from line side, remove jumpers 7-8 and connect button
8	
9	Jumper wired in the factory
10	
11	Jumper wired in the factory
14	
12	Jumper wired in the factory
13	
15	"On" for monitored start: Remove jumpers 15–16 and connect button
16	
17	NO [1]: Checkback "trip safety combination"
18	
Max. connectable cross-section: 4 mm²	

[1] NO: NO contact

Reconnection to the 24 V DC Button Circuit

When using the 24 V DC pushbutton circuit, you must remove the following jumpers at terminal block -X120:

- 4-5, 9-10, and 11-14

You must also insert the following jumpers at terminal block -X120:

- 4-11, 5-10, and 9-14

Diagnostics

Messages output during operation and in the event of faults (meaning of LEDs on -K120) are described in the "Additional Operating Instructions" of the Operating Instructions.

4.9.13 EMERGENCY STOP category 1; 230 V AC (option L59)

Description

EMERGENCY STOP category 1 for controlled stop according to EN 60204-1. The function includes rapid shutdown of the drive via fast stop at a ramp-down ramp to be parameterized. Then the cabinet unit is disconnected from the power supply via the line contactor, while bypassing the electronics by means of a safety combination according to EN 60204-1.
The operational status and function are indicated by a total of eight LEDs (-K120, -K121).

Connecting

Table 4- 44 Terminal block X120 – connection for EMERGENCY STOP category 1 (230 V AC)

Terminal	Technical data
4	Jumper wired in the factory
5	
7	Loop in EMERGENCY OFF button from line side, remove jumpers 7-8 and connect button
8	
9	Jumper wired in the factory
10	
11	Jumper wired in the factory
14	
12	Jumper wired in the factory
13	
15	"On" for monitored start: Remove jumpers 15–16 and connect button.
16	
17	NO [1]: Checkback "trip safety combination"
18	
Max. connectable cross-section: 4 mm²	

[1] NO: NO contact

Setting

The time (0.5 to 30 s) set for the contactor safety combination (-K121) should be longer than (or at least equal to) the time that the drive requires to reach a standstill via the quick stop (OFF3 ramp-down time, p1135), as the converter is disconnected from the power supply when the time expires (at -K121).

Diagnostics

Messages output during operation and in the event of faults (meaning of LEDs on -K120, -K121) are described in the "Additional Operating Instructions" of the Operating Instructions.

4.9.14 EMERGENCY STOP category 1; 24 V DC (option L60)

Description

EMERGENCY STOP category 1 for controlled stop according to EN 60204-1. The function includes rapid shutdown of the drive via fast stop at a ramp-down ramp to be parameterized. Then the cabinet unit is disconnected from the power supply via the line contactor, while bypassing the electronics by means of a safety combination according to EN 60204-1.
The operational status and function are indicated by five LEDs (-K120).

Connecting

Table 4- 45 Terminal block X120 – connection for EMERGENCY STOP category 1 (24 V DC)

Terminal	Technical data
4	Jumper wired in the factory
11	
5	Jumper wired in the factory
10	
7	Loop in EMERGENCY OFF button from line side, remove jumpers 7-8 and connect button
8	
9	Jumper wired in the factory
14	
12	Jumper wired in the factory
13	
15	"On" for monitored start: Remove jumpers 15–16 and connect button.
16	
17	NO [1]: Checkback "trip safety combination"
18	
Max. connectable cross-section: 4 mm²	

[1] NO: NO contact

Setting

The time (0.5 to 30 s) set for the contactor safety combination (-K120) should be longer than (or at least equal to) the time that the drive requires to reach a standstill via the quick stop (OFF3 ramp-down time, p1135), as the converter is disconnected from the power supply when the time expires (at -K120).

Diagnostics

Messages output during operation and in the event of faults (meaning of LEDs on -K120) are described in the "Additional Operating Instructions" of the Operating Instructions.

4.9.15 25 kW braking unit (option L61/L64); 50 kW braking unit (option L62/L65)

Description

Under normal circumstances, the braking energy is supplied back to the line. If a controlled stop is also required in the event of a power failure, however, additional braking units can be provided. The braking units comprise a chopper power unit and a load resistor, which must be attached externally. To monitor the braking resistor, it has an integrated thermostatic switch, which is included in the shutdown circuit of the cabinet unit.

Table 4- 46 Load data for the braking units

Line voltage	Continuous chopper power P_{DB}	Peak chopper output P_{15}	Chopper P_{20} output P_{20}	Chopper P_{40} output P_{40}	Braking resistor R_B	Max. current	Option
380 V ... 480 V	25 kW	125 kW	100 kW	50 kW	4.4 Ω ± 7.5%	189 A	L61
380 V ... 480 V	50 kW	250 kW	200 kW	100 kW	2.2 Ω ± 7.5%	378 A	L62
500 V ... 600 V	25 kW	125 kW	100 kW	50 kW	6.8 Ω ± 7.5%	153 A	L64
500 V ... 600 V	50 kW	250 kW	200 kW	100 kW	3.4 Ω ± 7.5%	306 A	L65
660 V ... 690 V	25 kW	125 kW	100 kW	50 kW	9.8 Ω ± 7.5%	127 A	L61
660 V ... 690 V	50 kW	250 kW	200 kW	100 kW	4.9 Ω ± 7.5%	255 A	L62

4.9.15.1 Installing the braking resistor

Installing the braking resistor

The braking resistor should not be installed in the vicinity of the converter. The installation location must fulfill the following conditions:

- The braking resistors are only suitable for floor mounting.
- The maximum cable length between the cabinet unit and braking resistor is 100 m.
- Sufficient space must be available for dissipating the energy converted by the braking resistor.
- A sufficient distance from flammable objects must be maintained.
- The braking resistor must be installed as a free-standing unit.
- Objects must not be placed on or anywhere above the braking resistor.
- The braking resistor should not be installed underneath fire detection systems, since these could be triggered by the resulting heat.
- For outdoor installation, a hood must be provided to protect the braking resistor from precipitation (in accordance with degree of protection IP20).

⚠ WARNING

Fire as a result of inadequate installation

If incorrectly installed (non-observance of the cooling clearances or inadequate clearances to flammable objects), there is the danger of fire damage with death or severe injury.

- It is essential that you maintain a cooling clearance of 200 mm on all sides of the braking resistor with ventilation grills.
- Maintain sufficient clearance to objects that can burn.

⚠ CAUTION

Burns caused by hot braking resistor surfaces

In operation, the braking resistor can reach high temperatures, which can cause burns if touched.

- Allow the braking resistor to cool down before starting any work.
- Use the appropriate personnel protection equipment, e.g. gloves.

Table 4- 47 Dimensions of the braking resistors

	Unit	25 kW resistor (option L61/L64)	50 kW resistor (option L62/L65)
Width	mm	740	810
Height	mm	605	1325
Depth	mm	485	485

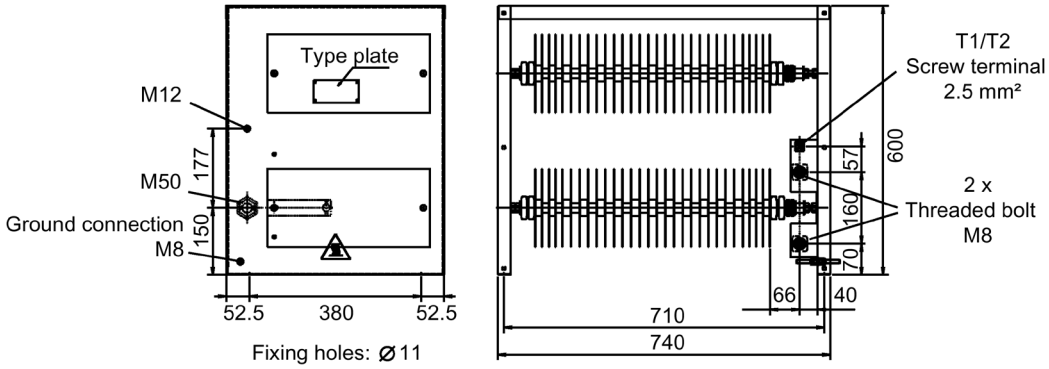

Figure 4-22 Dimension drawing for braking resistor (25 kW)

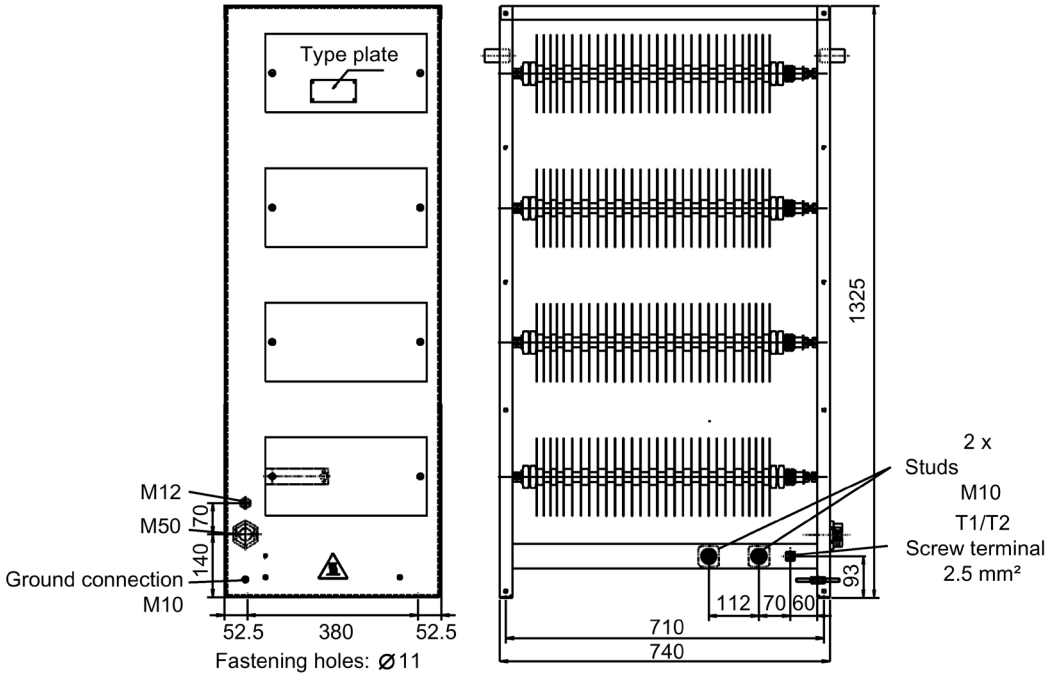

Figure 4-23 Dimension drawing for braking resistor (50 kW)

Connecting the braking resistor

WARNING

Fire caused by ground fault / short-circuit for non-protected connections to the braking resistor

Non-protected connections to the braking resistor can cause fire with smoke in the event of a short-circuit or ground fault that can cause severe injuries or death.

- Route the cables to the braking resistor so that a ground fault or short-circuit can be ruled out.
- Comply with local installation regulations that enable this fault to be ruled out.
- Protect the cables from mechanical damage.
- Apply one of the following measures:
  - Use cables with double insulation.
  - Observe adequate clearances, e.g. through the use of spacers.
  - Route the cables in separate cable ducts or pipes.

NOTICE

Material damage when exceeding the maximum permitted cable length

Exceeding the maximum permitted cable length to the braking resistor can cause material damage in the event of component failure.

- Observe the maximum cable length between the cabinet unit and the braking resistor of 100 m.

Table 4- 48 Terminal block -X5 – connection for external braking resistor

Terminal	Description of function
1	Braking resistor connection
2	Braking resistor connection
Max. connectable cross-section: 70 mm²	

Recommended cable cross-sections:

- For L61/L64 (25 kW): 35 mm²
- For L62/L65 (50 kW): 50 mm²

Connecting the thermostatic switch

Table 4- 49 Installing the thermostatic switch for the external braking resistor in the monitoring circuit of the cabinet unit by connecting to the Control Unit (without option G60)

Terminal	Description of function
T1	Thermostatic switch connection: connection with terminal X132:9 (DO12)
T2	Thermostatic switch connection: connection with terminal X122:5 (DI16)
Max. connectable cross-section (due to CU320-2): 1.5 mm²	

Table 4- 50 Installing the thermostatic switch for the external braking resistor in the monitoring circuit of the cabinet unit by connecting to the TM31 (with option G60)

Terminal	Description of function
T1	Thermostatic switch connection: connection with terminal X541:1 (P24 V)
T2	Thermostatic switch connection: connection with terminal X541:5 (DI11)
Max. connectable cross-section (due to TM31): 1.5 mm²	

WARNING

Fire when the thermostatic switch is not evaluated

If the thermostatic switch is not evaluated, then there is the danger of fire damage with death or severe injury.

- Evaluate the thermostatic switch using the Control Unit or a higher-level control system; a shutdown must be carried out if necessary.

4.9.15.2 Commissioning

Commissioning

When commissioning via STARTER, parameters are assigned to "external fault 3" and acknowledged automatically when option L61, L62, L64, or L65 is selected.

When commissioning via AOP30, the parameter entries required have to be set subsequently.

"Expert" access level

Set the "Expert" access level on the operator panel
<Key pushbutton> - <Access level> - Set "Expert" and confirm.

(03) p2108 = (01) 722.4

Connect digital input 4 (DI4) on the Control Unit to the first input of "External fault 3."

(03) p3111 = (03) 899.2

Connect the "Operation" signal to the second input of "External fault 3."

(01) p0745 = (03) 2138.7

Connect "Acknowledge fault" to digital output 15 (DO15) on the Control Unit.

If, during operation, an "Acknowledge fault" signal is initiated without there being a fault in the Braking Module, then this initiates an external fault 3.
You can prevent this response with the following measures:

- Link the "Acknowledge fault" signal with status bit 3 "Fault active" of status word ZSW1 (r2139.3).
- If a fault is not active, then do not initiate an "Acknowledge fault" signal.

Cabinet unit settings

If the thermostatic switch for the braking resistor is connected, appropriate settings have to be made so that the drive is brought to a standstill if a fault occurs.

Once the device has been successfully commissioned, you have to make the following changes:

Connect the thermostatic switch of the braking resistor to DI 16 of the Control Unit

"Expert" access level

↓

(03) p2107 = (01) 722.16

Set the "Expert" access level on the operator panel
<Key pushbutton> - <Access level> - Set "Expert" and confirm.

Interconnect external fault 2 to DI 16 of the Control Unit.

Connect the thermostatic switch of the braking resistor to DI 11 of the TM31 (option G60)

"Expert" access level

↓

(03) p2107 = (04) 4022.11

Set the "Expert" access level on the operator panel
<Key pushbutton> - <Access level> - Set "Expert" and confirm.

Interconnect external fault 2 to DI 11 of the TM31.

4.9.15.3 Diagnosis and duty cycles

Diagnosis

If the thermostat is opened due to a thermal overload on the braking resistor, fault F7861 ("External Fault 2") is triggered and the drive is switched off with OFF2.

If the brake chopper triggers a fault, fault F7862 "External fault 3" is triggered in the drive.

You can acknowledge malfunctions in the braking unit by pressing the "Acknowledge" button on the operator panel when the DC link voltage is present).

Duty cycles

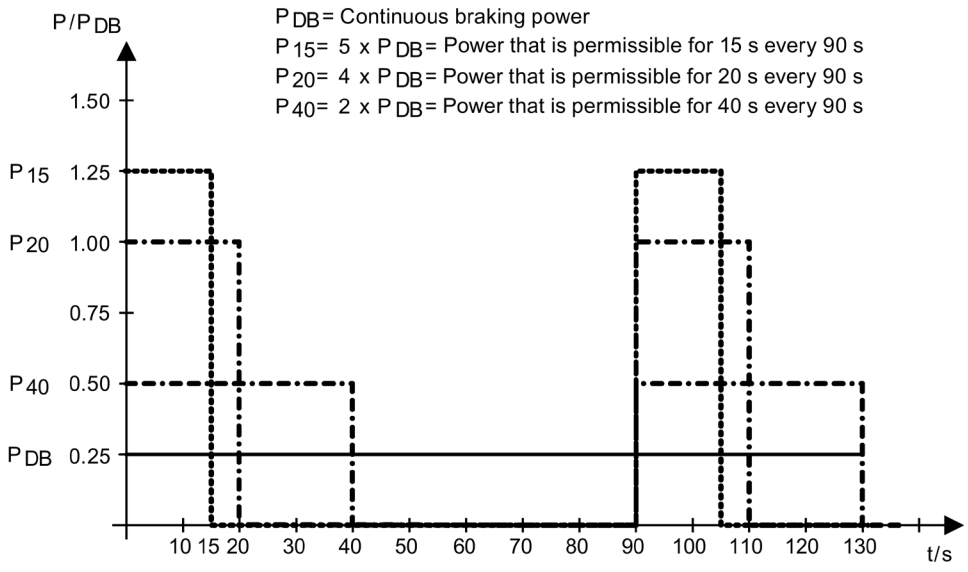

Figure 4-24 Duty cycles for the braking resistors

4.9.15.4 Threshold switch

The response threshold at which the braking unit is activated and the DC link voltage generated during braking are specified in the following table.

Note

Activate braking operation only in the event of a power failure

Since the braking energy is normally supplied back to the line and the braking chopper is only to be activated in the event of a power failure, the default threshold value setting should be retained rather than reduced.

WARNING

Electric shock when operating the threshold switch

Operating the threshold switch when a voltage is present can cause death or serious injury.

- Only operate the threshold switch when the cabinet unit is switched off and the DC link capacitors are discharged.

Table 4- 51 Response thresholds of the braking units

Rated voltage	Response threshold	Switch position	Comment
3 AC 380 ... 480 V	673 V	1	774 V is the default factory setting. For line voltages of between 3 AC 380 V and 400 V, the response threshold can be set to 673 V to reduce the voltage stress on the motor and converter. This does, however, reduce the possible braking power with the square of the voltage $(673/774)^2 = 0.75$. Therefore, the maximum possible braking power is 75 %.
	774 V	2	
3 AC 500 ... 600 V	841 V	1	967 V is the default factory setting. With a supply voltage of 500 V 3 AC, the response threshold can be set to 841 V to reduce the voltage stress on the motor and converter. This does, however, reduce the possible braking power with the square of the voltage $(841/967)^2 = 0.75$. Therefore, the maximum possible braking power is 75 %.
	967 V	2	
3 AC 660 ... 690 V	1070 V	1	1158 V is the default factory setting. With a supply voltage of 660 V 3 AC, the response threshold can be set to 1070 V to reduce the voltage stress on the motor and converter. This does, however, reduce the possible braking power with the square of the voltage $(1070/1158)^2 = 0.85$. Therefore, the maximum possible braking power is 85 %.
	1158 V	2	

Position of the threshold switch

The Braking Module is located in the top section of the cabinet unit in the discharged air duct of the Power Module. The position of the threshold switch can be taken from the figures below.

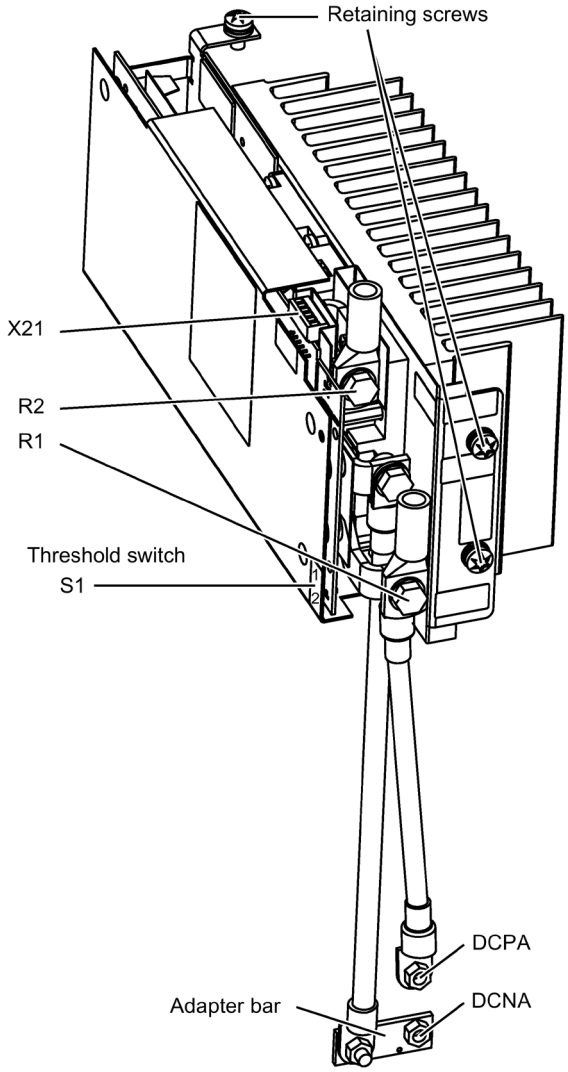

Figure 4-25 Braking Modules for frame size FX

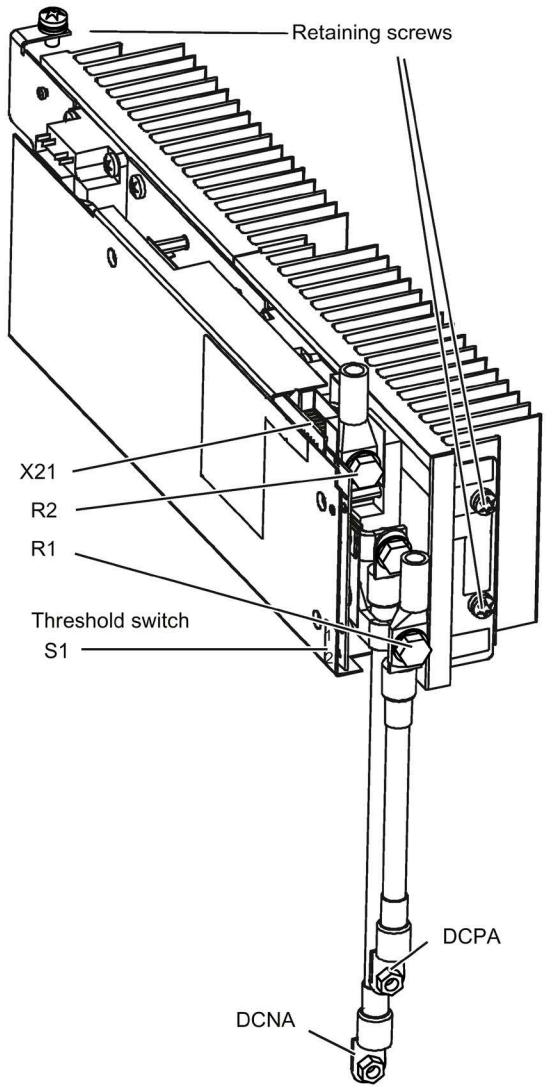

Figure 4-26 Braking Modules for frame size GX

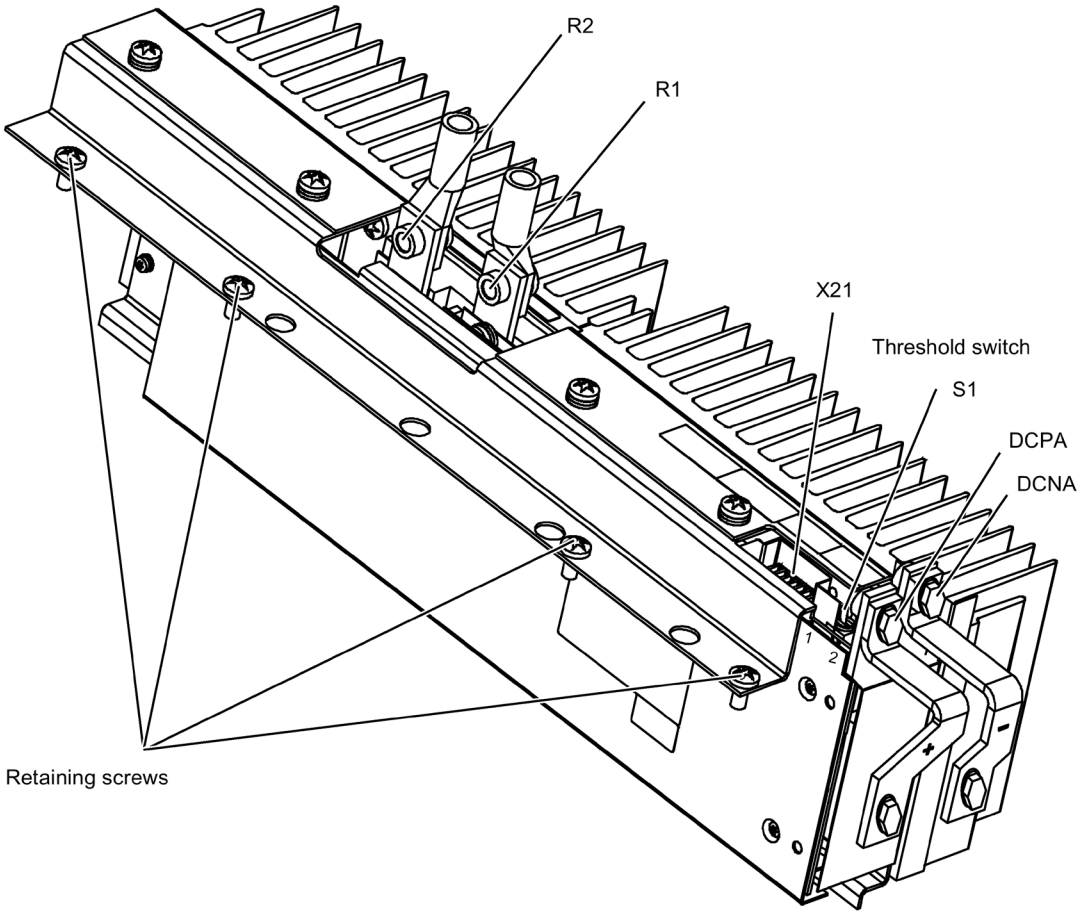

Figure 4-27 Braking Modules for frame sizes HX and JX

Position of the threshold switch

Note

Switch positions

The threshold switches for the Braking Modules are positioned on the panel as follows:

- Braking Modules for frame sizes FX and GX: position "1" is up; position "2" is down
- Braking Modules for frame sizes HX and JX: position "1" is back; position "2" is front

4.9.16 Thermistor motor protection unit (option L83/L84)

Description

This option includes the thermistor motor protection unit (with PTB approval) for PTC thermistor sensors (PTC resistor type A) for warning and shutdown. The power supply for the thermistor motor protection unit is provided inside the converter where the evaluation is also performed.

Option L83 triggers the "external alarm 1" (A7850) if a fault occurs.

Option L84 triggers the "external fault 1" (F7860) if a fault occurs.

Connection

Table 4- 52 -B127/B125 – connection for thermistor motor protection device

Equipment designation	Description of function
-B127: T1, T2	Thermistor motor protection (alarm)
-B125: T1, T2	Thermistor motor protection (shutdown)

The PTC thermistor sensors are connected directly to terminals T1 and T2 of the evaluation unit.

Table 4- 53 Maximum cable length for the sensor circuit

Line cross-section in mm²	Line length in m
2.5	2 x 2800
1.5	2 x 1500
0.5	2 x 500

Diagnostics

Messages output during operation and in the event of faults (meaning of LEDs on -B125, -B127) are described in the Operating Instructions in the customer DVD supplied with the equipment.

4.9.17 PT100 evaluation unit (option L86)

Description

Note

Additional operating instructions

The PT100 evaluation unit and the parameters for the measurement channels are described in the "Additional Operating Instructions".

The PT100 evaluation unit can monitor up to six sensors. The sensors can be connected in a two or three-wire system. With the two-wire system, inputs xT1 and xT3 must be assigned. With the three-wire system, input xT2 must also be connected to -B140, -B141 (x = 1, 2, 3). The limit values can be freely programmed for each channel. Shielded signal cables are recommended. If this is not possible, the sensor cables should have at least have twisted-pair wires.

In the delivery condition, the measurement channels are divided into two groups of 3 channels each. With motors, for example, this means that three PT100s in the stator windings and two PT100s in the motor bearings can be monitored. Unused channels can be suppressed via parameters.

The output relays are integrated in the internal fault and alarm train of the cabinet unit. The power for the PT100 evaluation unit is supplied and the evaluation itself executed within the converter.

When the temperature set for "alarm" is exceeded, "external alarm 1" (A7850) is triggered. When the temperature set for "fault" is exceeded, "external fault 1" (F7860) is triggered.

Connecting

Table 4- 54 Terminals -B140, -B141 – connection for PT100 evaluation unit

Terminal	Technical data
-B140: 1T1-1T3	24 ... 240 V AC/DC; PT100; sensor 1; group 1
-B140: 2T1-2T3	24 ... 240 V AC/DC; PT100; sensor 2; group 1
-B140: 3T1-3T3	24 ... 240 V AC/DC; PT100; sensor 3; group 1
-B141: 1T1-1T3	24 ... 240 V AC/DC; PT100; sensor 1; group 2
-B141: 2T1-2T3	24 ... 240 V AC/DC; PT100; sensor 2; group 2
-B141: 3T1-3T3	24 ... 240 V AC/DC; PT100; sensor 3; group 2
Max. connectable cross-section: 2.5 mm²	

Diagnostics

Messages output during operation and in the event of faults (meaning of LEDs on -B140, B141) are described in the Operating Instructions in the customer DVD supplied with the device.

4.9.18 Insulation monitor (option L87)

Description

In non-grounded systems (IT systems), the insulation monitor checks the entire electrically-connected circuit for insulation faults. The insulation resistance as well as all the insulation faults from the line supply to the motor in the cabinet unit are detected. Two response values (between 1 kΩ and 10 MΩ) can be set. If a response value in undershot, an alarm is output to the terminal. A system fault is output via the signaling relay system.

When the cabinet unit is delivered, the plant configuration (one or several loads in one electrically-connected network) and the protection philosophy (immediate shutdown in the event of an insulation fault or restricted continued motion) can vary. This means that the signaling relays of the insulation monitor must be integrated by the customer in the fault and warning sequence.

Safety information

Note

Number of insulation monitors

Only one insulation monitor can be used within the same electrically-connected network.

Note

The connection clip to the basic interference suppression module is removed in the factory

When using the insulation monitoring option, the connecting clip to the basic interference suppression module is removed in the factory and placed in the cabinet unit (see Chapter "Electrical installation/removing the connecting clip to the basic interference suppression module when connected to ungrounded line supplies (IT line system)").

Controls and displays on the insulation monitor

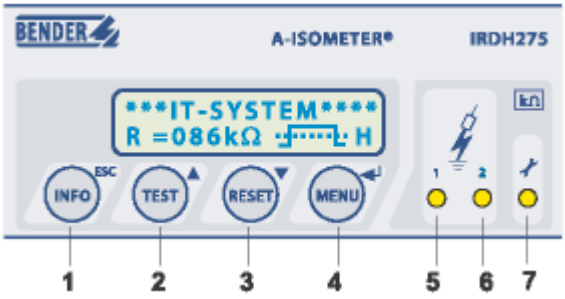

Figure 4-28 Controls and displays on the insulation monitor

Table 4- 55 Meaning of the controls and displays on the insulation monitor

Position	Meaning
1	INFO key: To request standard information/ ESC key: Back menu function
2	TEST key: Call up self-test Arrow key up: Parameter change, scroll
3	RESET button: Delete insulation and fault messages Arrow key down: Parameter change, scroll
4	Menu key: Call up menu system Enter key: Confirm parameter change
5	Alarm LED 1 lights up: Insulation fault, first alarm threshold reached
6	Alarm LED 2 lights up: Insulation fault, second alarm threshold reached
7	LED lights up: System error present

Connecting

Table 4- 56 Connections on insulation monitor

Terminal	Technical data
A1	Supply voltage via 6 A melting fuse: 88 to 264 V AC, 77 to 286 V DC
A2	
L1	Connection of the 3 AC system to be monitored
L2	
AK	Connection to coupling device
KE	PE connection
T1	External test button
T2	External test button
R1	External reset key (NC contact or wire jumper otherwise the fault code is not stored)
R2	External reset key (NC contact or wire jumper)
F1	STANDBY with aid of F1, F2 function input:
F2	
M+	External kΩ display, analog output (0 ... 400 µA)
M-	External kΩ display, analog output (0 ... 400 µA)
A	Serial interface RS 485 (termination by means of 120 ohm resistor)
B	
11	Signaling relay ALARM 1 (mid-position contact)
12	Signaling relay ALARM 1 (NC contact)
14	Signaling relay ALARM 1 (NO contact)
21	Signaling relay ALARM 2 (mid-position contact)
22	Signaling relay ALARM 2 (NC contact)
24	Signaling relay ALARM 2 (NO contact)
Max. connectable cross-section: 2.5 mm²	

Diagnostics

For a description of messages output during operation and in the event of faults (meaning of LEDs on -B101), consult the Operating Instructions in the customer DVD supplied with the device.

4.9.19 CBC10 CAN Communication Board (option G20)

Description

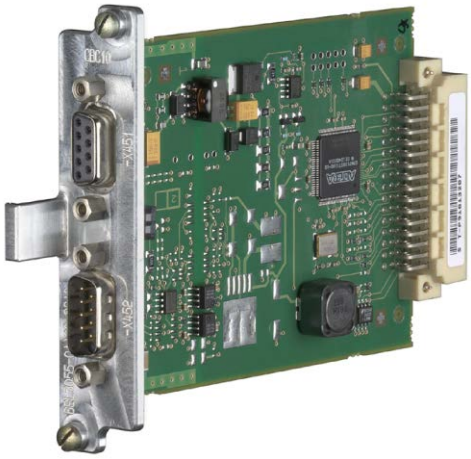

Figure 4-29 CAN CBC10 Communication Board

The CBC10 CANopen communication board (CAN Communication Board) is used to connect drives in the SINAMICS drive system to higher-level automation systems with a CAN bus.

The CANopen Option Board uses two 9-pin SUB D connectors for the connection to the CAN bus system.

The connectors can be used as inputs or outputs. Unused pins are plated through.

Among others, the following transmission rates are supported: 10, 20, 50, 125, 250, 500, 800 kBaud, and 1 Mbaud.

NOTICE
Damage or malfunctions to the Option Board by inserting and withdrawing in operation Withdrawing and inserting Option Boards during operation can damage them or cause the Option Boards to malfunction. • Only withdraw or insert Option Boards when the Control Unit is in a no voltage state.

The module is inserted in the option slot of the Control Unit at the factory.

Interface overview

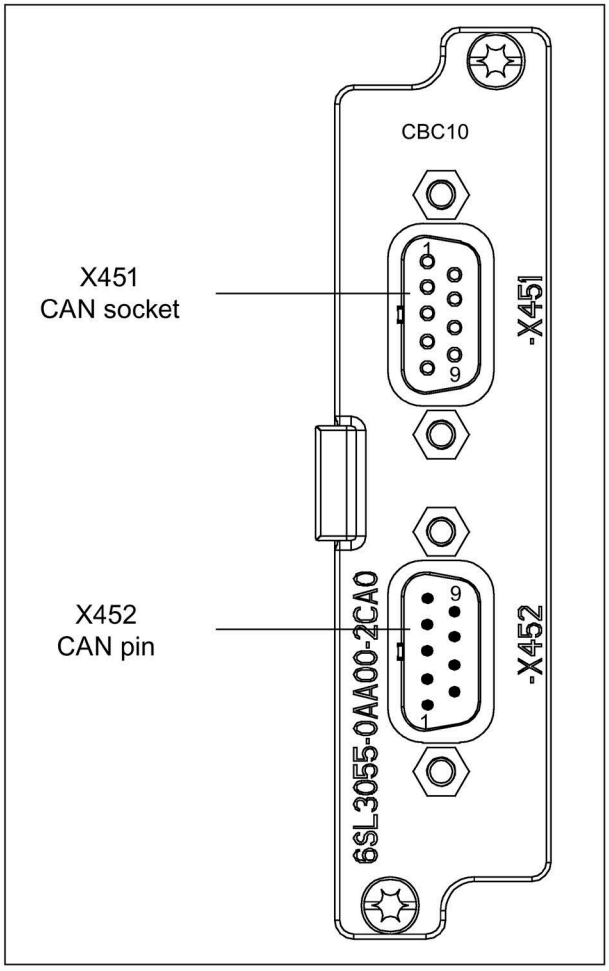

Figure 4-30 CAN CBC10 Communication Board

CAN bus interface -X451

Table 4- 57 CAN bus interface -X451

Connector	Pin	Designation	Technical data
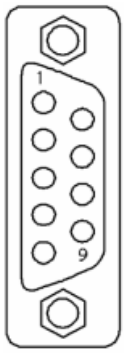	1	Reserved, do not use	
	2	CAN_L	CAN signal (dominant low)
	3	CAN_GND	CAN ground
	4	Reserved, do not use	
	5	CAN_SHLD	Optional shield
	6	GND	CAN ground
	7	CAN_H	CAN signal
	8	Reserved, do not use	
	9	Reserved, do not use	
Connector type: 9-pin Sub-D socket			

NOTICE

Destruction of the CAN interface due to the wrong connector

If PROFIBUS connectors are connected to CAN bus interfaces during operation, this may lead to the CAN interfaces being destroyed.

- Do not connect PROFIBUS connectors to CAN bus interfaces.

CAN bus interface -X452

Table 4- 58 CAN bus interface -X452

Connector	Pin	Designation	Technical data
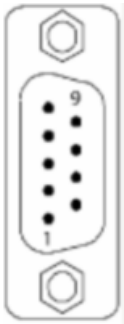	1	Reserved, do not use	
	2	CAN_L	CAN signal (dominant low)
	3	CAN_GND	CAN ground
	4	Reserved, do not use	
	5	CAN_SHLD	Optional shield
	6	GND	CAN ground
	7	CAN_H	CAN signal
	8	Reserved, do not use	
	9	Reserved, do not use	
Connector type: 9-pin SUB D connector (pins)			

Further information about communication via CAN bus

Note

Further information

Detailed and comprehensive instructions and information for the CANopen interface can be found in the accompanying Function Manual. This manual is available as additional documentation on the accompanying customer DVD.

4.9.20 Communication Board Ethernet CBE20 (option G33)

Description

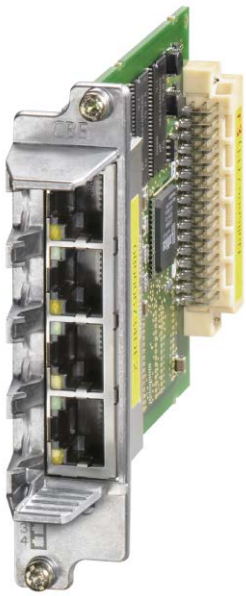

Figure 4-31 Communication Board Ethernet CBE20

The CBE20 interface module is used for communication via PROFINET / SINAMICS Link / Ethernet/IP.

The module is inserted in the option slot of the Control Unit at the factory.

4 Ethernet interfaces are available on the module. Diagnosis of the function mode and communication are possible via LEDs.

Interface overview

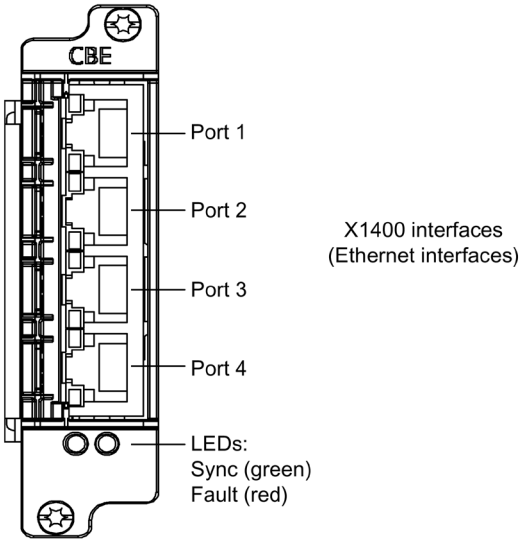

Figure 4-32 Communication Board Ethernet CBE20

MAC address

The MAC address of the Ethernet interfaces is indicated on the upper side of the CBE20. The plate is not visible when the module is installed.

Note

Note the MAC address

Remove the module from the option slot of the Control Unit and note down the MAC address so that it is available during subsequent commissioning.

Removal/installation

NOTICE

Damage or malfunctions to the Option Board by inserting and withdrawing in operation

Withdrawing and inserting Option Boards during operation can damage them or cause the Option Boards to malfunction.

- Only withdraw or insert Option Boards when the Control Unit is in a no voltage state.

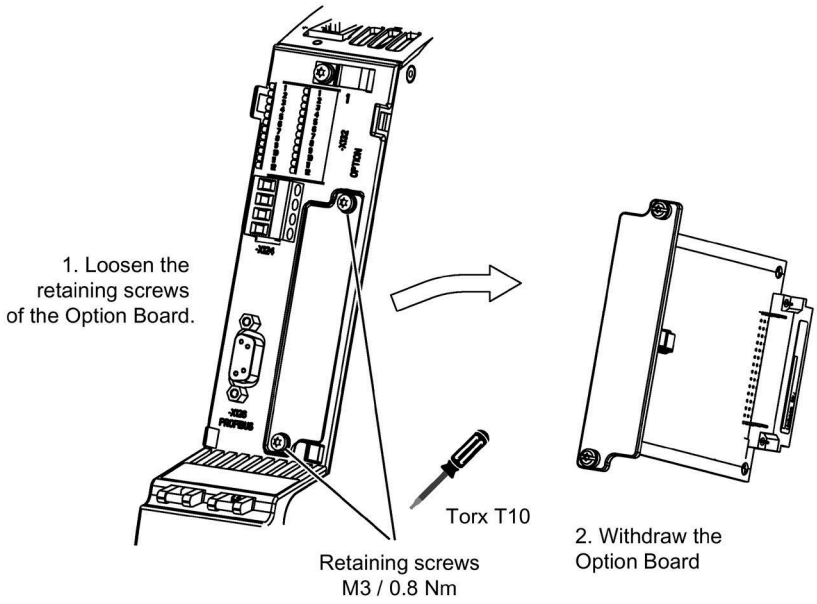

Figure 4-33 Removing the CBE20 from the option slot on the Control Unit

X1400 Ethernet interface

Table 4- 59 Connector X1400, port 1 - 4

Connector	Pin	Signal name	Technical data
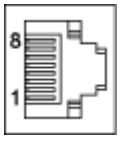	1	RX+	Receive data +
	2	RX-	Receive data -
	3	TX+	Transmit data +
	4	Reserved, do not use	
	5	Reserved, do not use	
	6	TX-	Transmit data -
	7	Reserved, do not use	
	8	Reserved, do not use	
	Screened backshell	M_EXT	Screen, permanently connected
Connector type: RJ45 socket			

4.9.21 TM150 temperature sensor module (option G51)

4.9.21.1 Description

Terminal Module TM150 is used for sensing and evaluating several temperature sensors. The temperature is measured in a temperature range from -99 °C to +250 °C for the following temperature sensors:

- PT100 (with monitoring for wire breakage and short-circuit)
- PT1000 (with monitoring for wire breakage and short-circuit)
- KTY84 (with monitoring for wire breakage and short-circuit)
- PTC (with short-circuit monitoring)
- Bimetallic NC contact (without monitoring)

For the temperature sensor inputs, for each terminal block the evaluation can be parameterized for 1x2-wire, 2x2-wire, 3-wire or 4-wire. There is no galvanic isolation in the TM150.

A maximum of 12 temperature sensors can be connected at the TM150 Terminal Module.

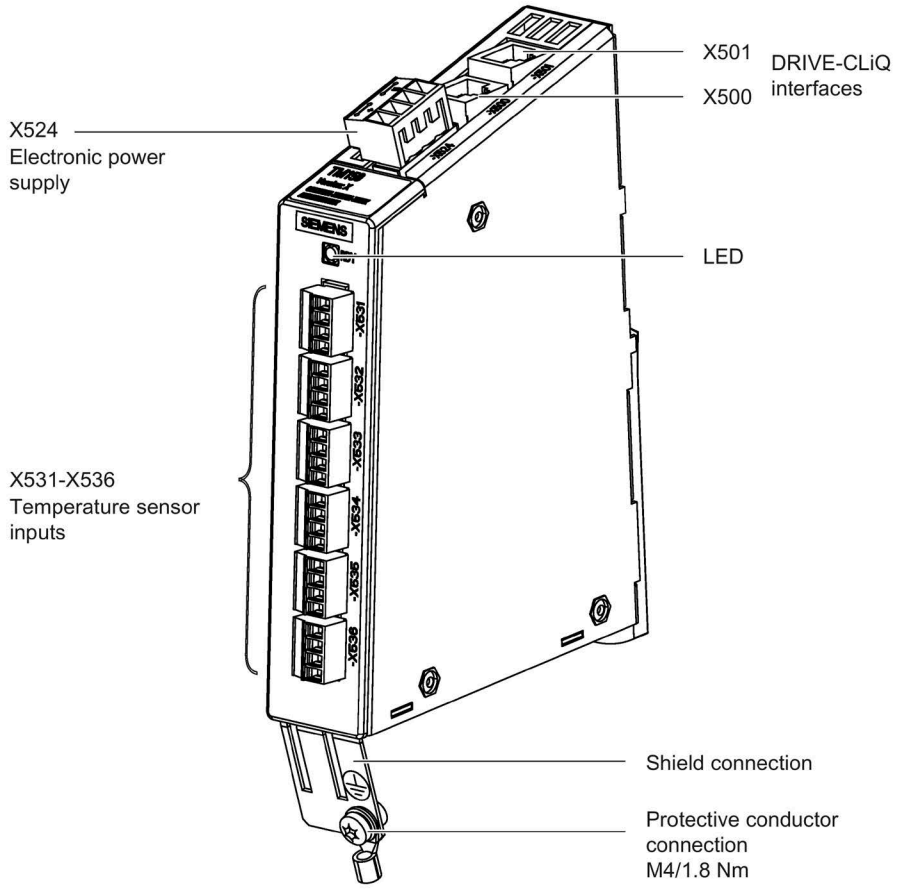

Figure 4-34 Terminal Module TM150

4.9.21.2 Connecting

Temperature sensor connections

Table 4- 60 X531-X536 temperature sensor inputs

Connector	Terminal	Function 1x2-/2x2-wire	Function 3 and 4-wire	Technical data
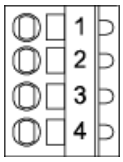	1	+Temp (channel x)	+ (Channel x)	Temperature sensor connection for sensors with 1x2 wires Connection of the 2nd measurement cable for sensors with 4 wires
	2	-Temp (channel x)	- (Channel x)	Temperature sensor connection for sensors with 1x2 wires Connection of the 1st measurement cable for sensors with 3 and 4 wires
	3	+Temp (channel y)	+ I_c (constant current, positive channel x)	Temperature sensor connection for sensors with 2x2, 3 and 4-wires
	4	-Temp (channel y)	- I_c (constant current, negative channel x)	
Max. connectable cross-section: 1.5 mm^2				

Measuring current via temperature sensor connection: approx. 0.83 mA

When connecting temperature sensors with 3 wires, a jumper must be inserted between X53x.2 and X53x.4.

Table 4- 61 Channel assignment

Terminal	Channel number [x] for 1x2, 3 and 4-wires	Channel number [y] for 2x2 wires
X531	0	6
X532	1	7
X533	2	8
X534	3	9
X535	4	10
X536	5	11

⚠ WARNING

Electric shock in the event of voltage flashovers at the temperature sensor

Voltage flashovers in the signal electronics can occur in motors without safe electrical separation of the temperature sensors.

- Use temperature sensors that fully comply with the specifications of the safety isolation.

NOTICE

Damage to the motor in the event of incorrectly connected KTY temperature sensor

If a KTY temperature sensor is connected with incorrect polarity, it is not possible to detect when the motor overheats. Overheating can cause damage to the motor.

- Connect a KTY temperature sensor with the correct polarity.

NOTICE

Overheating of the motor through jumpering the temperature sensor connections

Jumpering of the temperature sensor connections "+Temp" and "- Temp" results in incorrect measured results. Damage to the motor can result if the overheating is not detected.

- When using several temperature sensors, separately connect the individual sensors to "+Temp" and "-Temp".

NOTICE

Device failure as a result of unshielded or incorrectly routed cables to temperature sensors

Unshielded or incorrectly routed cables to temperature sensors can result in interference being coupled into the signal processing electronics from the power side. This can result in significant disturbance of all signals (fault messages) up to failure of individual components (destruction of the devices).

- Only use shielded cables as temperature sensor cables.
- If temperature sensor cables are routed together with the motor cable, use separately shielded cables twisted in pairs.
- Connect the cable shield to ground potential through a large surface area.

Note

Incorrect temperature measured values as a result of cables with an excessively high resistance

An excessively long cable length or an excessively small cable cross-section can falsify the temperature measurement (for a PT100, 10 Ω cable resistance can falsify the measurement result by 10%). As a consequence, excessively high measured values are output, which could lead to the motor being unnecessarily tripped prematurely.

- Use only cable lengths ≤ 300 m.
- For cable lengths >100 m, use cables with a cross-section of ≥1 mm^2.
- Align the cable resistances (software function in the TM150).

Protective conductor connection and shield support

The following diagram shows a typical Weidmüller shield connection clamp for the shield supports.

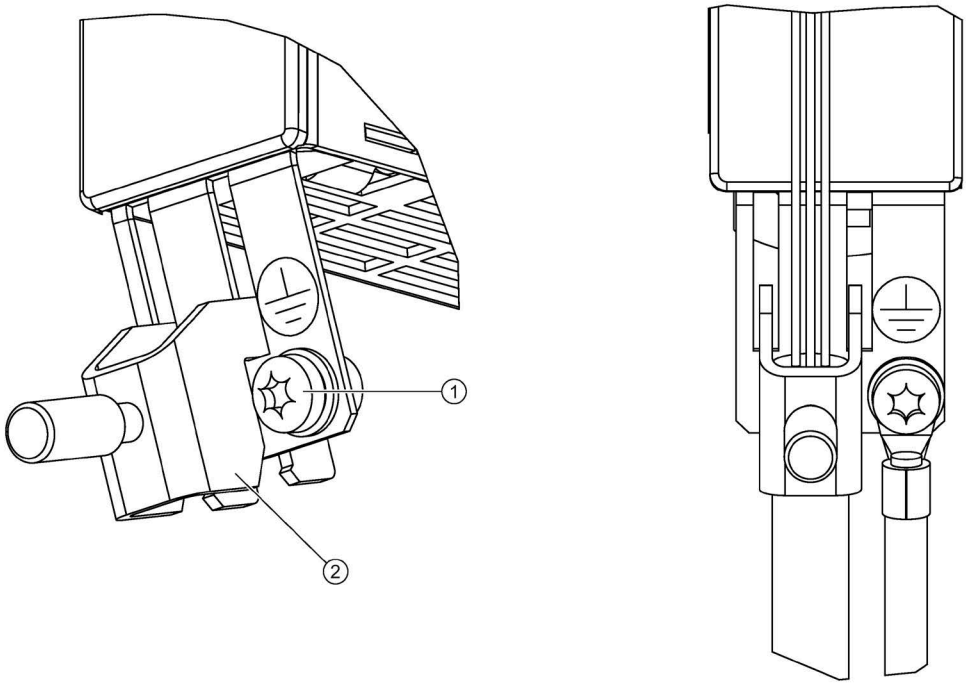

① Protective conductor connection M4/1.8 Nm

② Shield connection terminal, Weidmüller company, type: KLBÜ CO1, order number: 1753311001

Figure 4-35 Shield support and protective conductor connection of the TM150

4.9.21.3 Connection examples

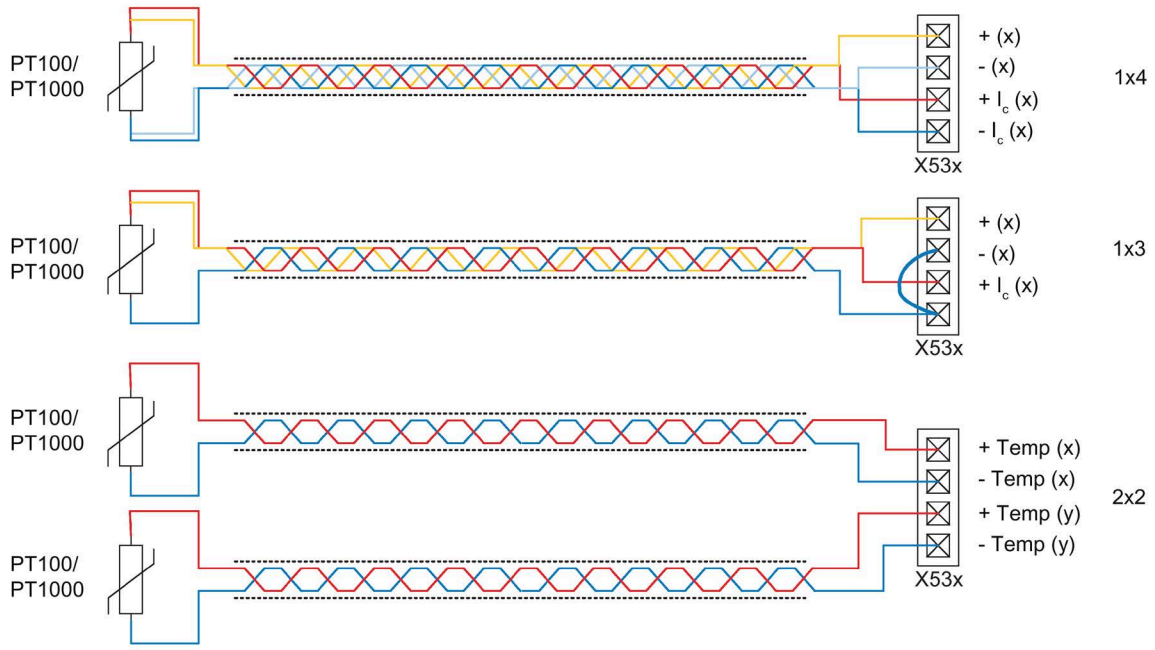

Figure 4-36 Connecting a PT100/PT1000 with 2x2, 3 and 4-wires to the temperature sensor inputs X53x of Terminal Module TM150

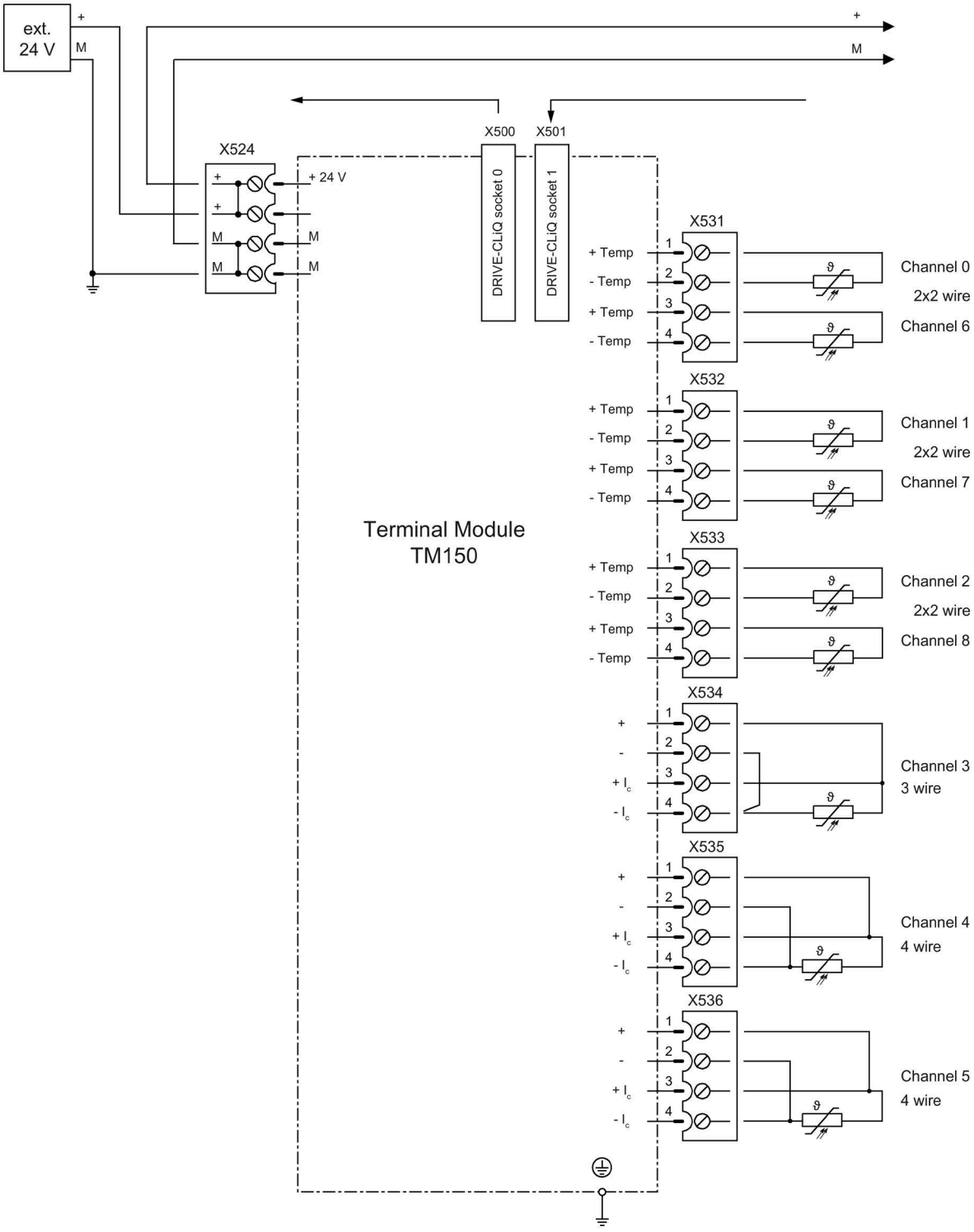

Figure 4-37 Connection example for a Terminal Module TM150

4.9.22 SMC10 Sensor Module Cabinet-Mounted (option K46)

4.9.22.1 Description

The SMC10 Sensor Module is used for determining the actual motor speed and the rotor position angle. The signals received from the resolver are converted here and made available to the closed-loop controller via the DRIVE-CLiQ interface for evaluation purposes.

The following encoders can be connected to the SMC10 Sensor Module:

- 2-pole resolver
- Multipole resolver
- KTY, PT1000 or PTC temperature sensor

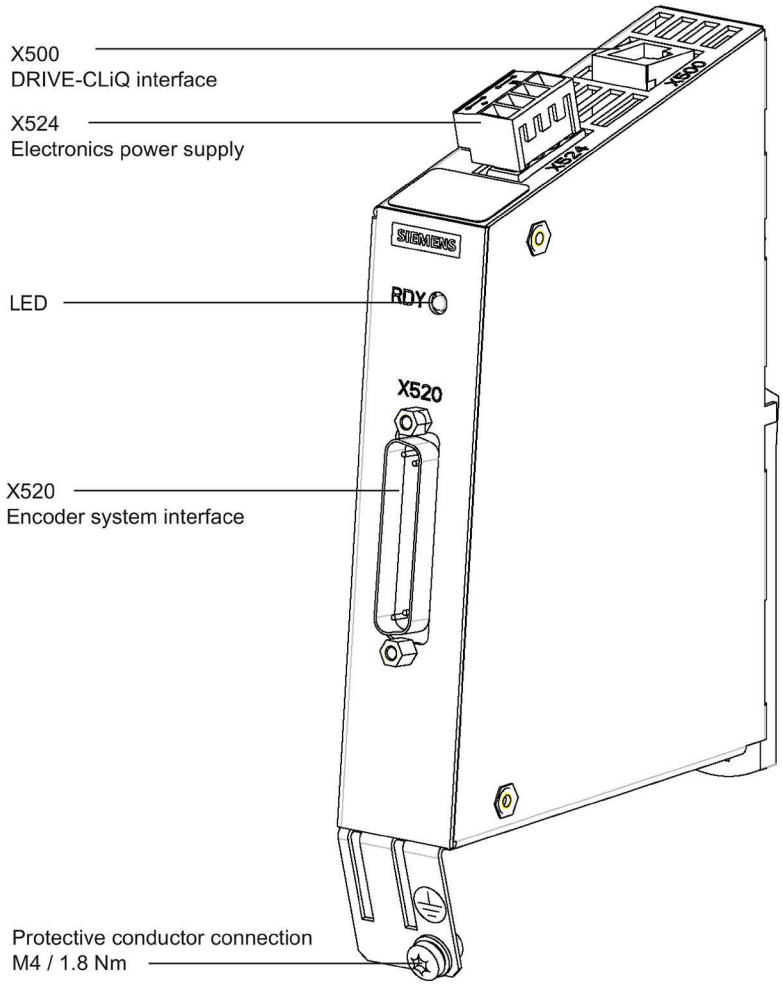

Figure 4-38 SMC10 Sensor Module

4.9.22.2 Connection

X520: Encoder connection

Table 4- 62 Encoder connection X520

Connector	Pin	Signal name	Technical data
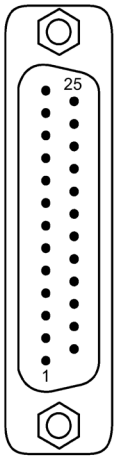	1	Reserved, do not use	
	2	Reserved, do not use	
	3	S2	Resolver signal A (sin+)
	4	S4	Inverted resolver signal A (sin-)
	5	Ground	Ground (for internal shield)
	6	S1	Resolver signal B (cos+)
	7	S3	Inverted resolver signal B (cos-)
	8	Ground	Ground (for internal shield)
	9	R1	Resolver excitation positive
	10	Reserved, do not use	
	11	R2	Resolver excitation negative
	12	Reserved, do not use	
	13	+ Temp [1]	Temperature sensor KTY84-1C130 / PT1000 / PTC
	14	Reserved, do not use	
	15	Reserved, do not use	
	16	Reserved, do not use	
	17	Reserved, do not use	
	18	Reserved, do not use	
	19	Reserved, do not use	
	20	Reserved, do not use	
	21	Reserved, do not use	
	22	Reserved, do not use	
	23	Reserved, do not use	
	24	Ground	Ground (for internal shield)
	25	- Temp [1]	Temperature sensor KTY84-1C130 / PT1000 / PTC
Connector type: 25-pin SUB D connector (pins)			
Measuring current via temperature sensor connection: 2 mA			

[1] Accuracy of the temperature measurement:
- KTY: ±7 °C (including evaluation)
- PT1000: ±5 °C (PT1000 tolerance class B according to EN 60751 including evaluation)
- PTC: ±5 °C (including evaluation)

WARNING

Electric shock in the event of voltage flashovers at the temperature sensor

Voltage flashovers in the signal electronics can occur in motors without safe electrical separation of the temperature sensors.

- Only use temperature sensors that fully comply with the specifications of the safety isolation.

NOTICE

Device failure as a result of unshielded or incorrectly routed cables to temperature sensors

Unshielded or incorrectly routed cables to temperature sensors can result in interference being coupled into the signal processing electronics from the power side. This can result in significant disturbance of all signals (fault messages) up to failure of individual components (destruction of the devices).

- Only use shielded cables as temperature sensor cables.
- If temperature sensor cables are routed together with the motor cable, use separately shielded cables twisted in pairs.
- Connect the cable shield to ground potential through a large surface area.
- Recommendation: Use suitable Motion Connect cables.

NOTICE

Damage to motor in the event of incorrectly connected KTY temperature sensor

If a KTY temperature sensor is connected with incorrect polarity, it is not possible to detect when the motor overheats. Overheating can cause damage to the motor.

- Connect a KTY temperature sensor with the correct polarity.

Note

Maximum signal cable length

The maximum signal cable length is 130 m.

4.9.22.3 Connection example

Connection example: Resolver, 8-pin

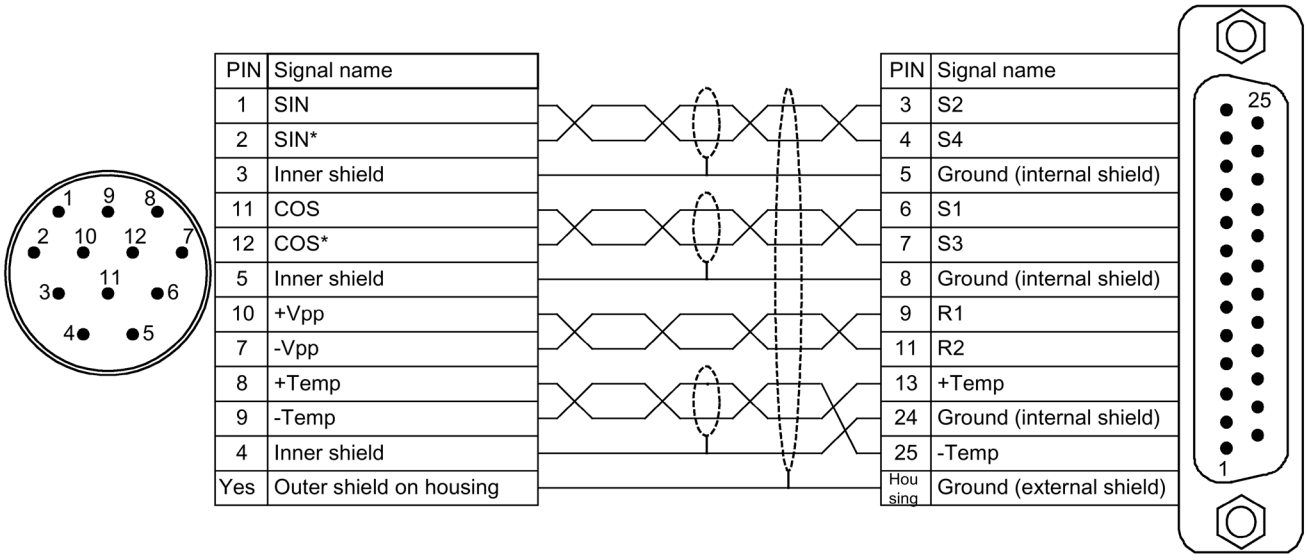

Figure 4-39 Connection example: Resolver, 8-pin

Parameter settings

Table 4- 63 Parameter settings for an 8-pole resolver at the SMC10

Parameter	Name	Value
p0400[0]	Enc type selection	Resolver 4 speed (1004)
p0404[0]	Encoder configuration effective	800010(hex)
p0404[0].0	Linear encoder	No
p0404[0].1	Absolute encoder	No
p0404[0].2	Multiturn encoder	No
p0404[0].3	Track A/B square-wave	No
p0404[0].4	Track A/B sinusoidal	Yes
p0404[0].5	Track C/D	No
p0404[0].6	Hall sensor	No
p0404[0].8	EnDat encoder	No
p0404[0].9	SSI encoder	No
p0404[0].12	Equidistant zero mark	No
p0404[0].13	Irregular zero mark	No
p0404[0].14	Distance-coded zero mark	No
p0404[0].15	Commutation with zero mark	No
p0404[0].16	Acceleration	No
p0404[0].17	Track A/B analog	No
p0404[0].20	Voltage level 5 V	No
p0404[0].21	Voltage level 24 V	No
p0404[0].22	Remote sense (only SMC30)	No
p0404[0].23	Resolver excit.	Yes
p0405[0]	Square-wave signal encoder A/B track	0(hex)
p0408[0]	Rotary encoder pulse No.	4

4.9.23 SMC20 Sensor Module Cabinet-Mounted (option K48)

4.9.23.1 Description

Description

The SMC20 Sensor Module is used for determining the actual motor speed and the path length. The signals emitted by the rotary pulse encoder are converted here and made available to the closed-loop controller via the DRIVE-CLiQ interface for evaluation purposes.

The following encoders can be connected to the SMC20 Sensor Module:

- Incremental encoder sin/cos 1Vpp
- Absolute encoder for EnDat and SSI (with 5 V operating voltage)
- KTY, PT1000 or PTC temperature sensor

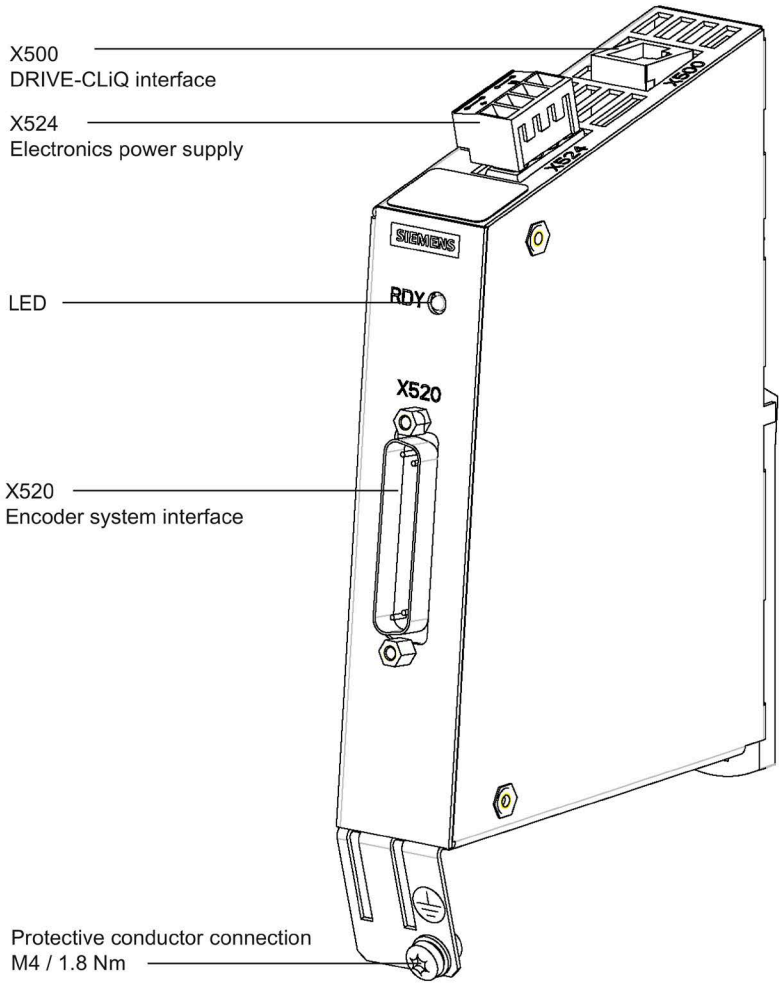

Figure 4-40 SMC20 Sensor Module

4.9.23.2 Connection

X520: Encoder connection

Table 4- 64 Encoder connection X520

Connector	Pin	Signal name	Technical data
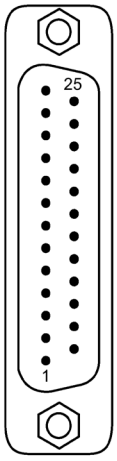	1	P encoder	Encoder supply
	2	M encoder	Ground for encoder power supply
	3	A	Incremental signal A
	4	A*	Inverse incremental signal A
	5	Ground	Ground (for internal shield)
	6	B	Incremental signal B
	7	B*	Inverse incremental signal B
	8	Ground	Ground (for internal shield)
	9	Reserved, do not use	
	10	Clock	Clock, EnDat interface, SSI clock
	11	Reserved, do not use	
	12	Clock*	Inverted clock, EnDat interface, inverted SSI clock
	13	+Temp [1)]	Temperature sensor KTY84-1C130 / PT1000 / PTC
	14	P sense	Sense input encoder power supply
	15	Data	Data, EnDat interface, SSI data
	16	M sense	Ground sense input encoder power supply
	17	R	Reference signal R
	18	R*	Inverse reference signal R
	19	C	Absolute track signal C
	20	C*	Inverted absolute track signal C
	21	D	Absolute track signal D
	22	D*	Inverted absolute track signal D
	23	Data*	Inverse data, EnDat interface, Inverse SSI data
	24	Ground	Ground (for internal shield)
	25	-Temp [1)]	Temperature sensor KTY84-1C130 / PT1000 / PTC
Connector type: 25-pin SUB D connector (pins)			
Measuring current via temperature sensor connection: 2 mA			

[1)] Accuracy of the temperature measurement:
- KTY: ±7 °C (including evaluation)
- PT1000: ±5 °C (PT1000 tolerance class B according to EN 60751 including evaluation)
- PTC: ±5 °C (including evaluation)

WARNING

Electric shock in the event of voltage flashovers at the temperature sensor

Voltage flashovers in the signal electronics can occur in motors without safe electrical separation of the temperature sensors.

- Only use temperature sensors that fully comply with the specifications of the safety isolation.

NOTICE

Device failure as a result of unshielded or incorrectly routed cables to temperature sensors

Unshielded or incorrectly routed cables to temperature sensors can result in interference being coupled into the signal processing electronics from the power side. This can result in significant disturbance of all signals (fault messages) up to failure of individual components (destruction of the devices).

- Only use shielded cables as temperature sensor cables.
- If temperature sensor cables are routed together with the motor cable, use separately shielded cables twisted in pairs.
- Connect the cable shield to ground potential through a large surface area.
- Recommendation: Use suitable Motion Connect cables.

NOTICE

Damage to motor in the event of incorrectly connected KTY temperature sensor

If a KTY temperature sensor is connected with incorrect polarity, it is not possible to detect when the motor overheats. Overheating can cause damage to the motor.

- Connect a KTY temperature sensor with the correct polarity.

Note

P sense and M sense

The cables for P sense or M sense with P encoder or M encoder must be jumpered on the encoder end. The supply voltage of the encoder is detected by the SMC20 and automatically adjusted to 5 V to compensate any power loss.

Note

Maximum signal cable length

The maximum signal cable length is 100 m.

4.9.23.3 Connection example

Connection example: Incremental encoder sin/cos 1 Vpp, 2048

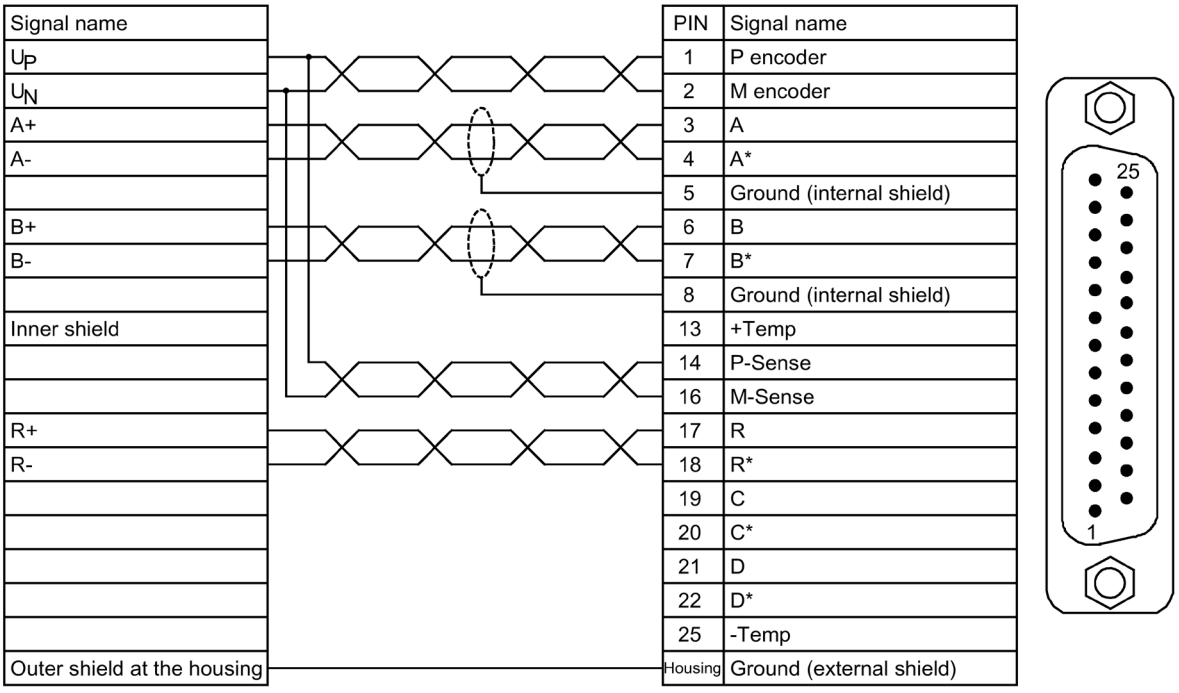

Figure 4-41 Connection example: Incremental encoder sin/cos 1 Vpp, 2048

Parameter settings

Table 4- 65 Parameter settings for incremental encoder sin/cos on SMC20

Parameters	Name	Value
p0400[0]	Enc type selection	2048, 1 Vpp, A/B R (2002)
p0404[0]	Encoder configuration effective	101010(hex)
p0404[0].0	Linear encoder	No
p0404[0].1	Absolute encoder	No
p0404[0].2	Multiturn encoder	No
p0404[0].3	Track A/B square-wave	No
p0404[0].4	Track A/B sinusoidal	Yes
p0404[0].5	Track C/D	No
p0404[0].6	Hall sensor	No
p0404[0].8	EnDat encoder	No
p0404[0].9	SSI encoder	No
p0404[0].12	Equidistant zero mark	Yes
p0404[0].13	Irregular zero mark	No
p0404[0].14	Distance-coded zero mark	No
p0404[0].15	Commutation with zero mark	No
p0404[0].16	Acceleration	No
p0404[0].17	Track A/B analog	No
p0404[0].20	Voltage level 5 V	Yes
p0404[0].21	Voltage level 24 V	No
p0404[0].22	Remote sense (only SMC30)	No
p0404[0].23	Resolver excit.	Yes
p0405[0]	Square-wave signal encoder A/B track	0(hex)
p0407[0]	Linear encoder scale	0
p0408[0]	Rotary encoder pulse No.	2048
p0410[0]	Encoder inversion actual value	0(hex)
p0425[0]	Encoder, rotary zero mark distance	2048

4.9.24 SMC30 Sensor Module Cabinet-Mounted (option K50)

4.9.24.1 Description

The SMC30 Sensor Module is used for determining the actual motor speed. The signals emitted by the rotary pulse encoder are converted here and made available to the closed-loop controller via the DRIVE-CLiQ interface for evaluation purposes.

The following encoders can be connected to the SMC30 Sensor Module:

- TTL encoder
- HTL encoder
- SSI encoder
- KTY, PT1000 or PTC temperature sensor

Table 4- 66 Connectable encoders with supply voltage

Encoder type	X520 (SUB-D)	X521 (terminal)	X531 (terminal)	Open-circuit monitoring	Remote sense
HTL bipolar 24 V	Yes	Yes	Yes	Yes	No
HTL unipolar 24 V	Yes	Yes	Yes	No	No
TTL bipolar 24 V	Yes	Yes	Yes	Yes	No
TTL bipolar 5 V	Yes	Yes	Yes	Yes	To X520
TTL unipolar	No	No	No	No	No
SSI 24 V/5 V	Yes	Yes	Yes	No	No

Table 4- 67 Maximum signal cable lengths

Encoder type	Maximum signal cable length in m
TTL	100
HTL unipolar	100
HTL bipolar	300
SSI	100

Note

Prefer a bipolar connection

Because the physical transmission media is more robust, the bipolar connection should always be used for HTL encoders. The unipolar connection should only be used if the encoder type does not output push-pull signals.

Note

Only connect one encoder system

Only one encoder system may be connected to the encoder module, either at X520 or at X521/X531. The corresponding unused interface must not be used.

Table 4- 68 Specification of measuring systems that can be connected

Parameters	Designation	Threshold [4]	Min.	Max.	Unit
High signal level (TTL bipolar at X520 or X521/X531) [1]	U_{Hdiff}		2	5	V
Low signal level (TTL bipolar to X520 or X521/X531) [1]	U_{Ldiff}		-5	-2	V
High signal level (HTL unipolar)	U_H [4]	High	17	V_{CC}	V
		Low	10	V_{CC}	V
Low signal level (HTL unipolar)	U_L [4]	High	0	7	V
		Low	0	2	V
High signal level (HTL bipolar) [2]	U_{Hdiff}		3	V_{CC}	V
Low signal level (HTL bipolar) [2]	U_{Ldiff}		$-V_{CC}$	-3	V
High signal level (SSI bipolar at X520 or X521/X531) [1]	U_{Hdiff}		2	5	V
Low signal level (SSI bipolar at X520 or X521/X531) [1]	U_{Ldiff}		-5	-2	V
Signal frequency	f_S		-	300	kHz
Edge spacing	t_{min}		100	-	ns
Zero pulse inactive time (before and after A=B=high)	t_{Lo}		640	$(t_{ALo\text{-}BHi} - t_{Hi})/2$ [3]	ns
Zero pulse active time (while A=B=high and beyond)	t_{Hi}		640	$t_{ALo\text{-}BHi} - 2 \times t_{Lo}$ [3]	ns

[1] Other signal levels according to the RS 422 standard.

[2] The absolute level of the individual signals varies between 0 V and V_{CC} of the measuring system.

[3] $t_{ALo\text{-}BHi}$ is not a specified value, but is the time between the falling edge of track A and the next but one rising edge of track B.

[4] The threshold can be set via p0405.04 (switching threshold); the setting on delivery is "Low."

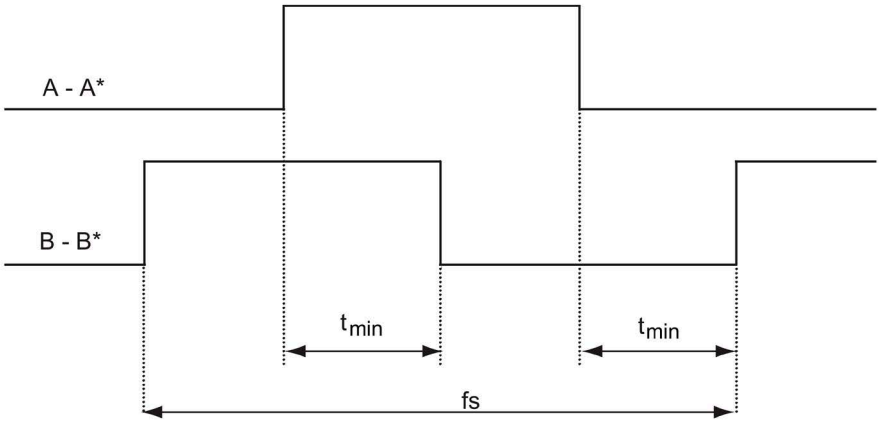

Figure 4-42 Signal characteristic of the A and B track between two edges: time between two edges with pulse encoders

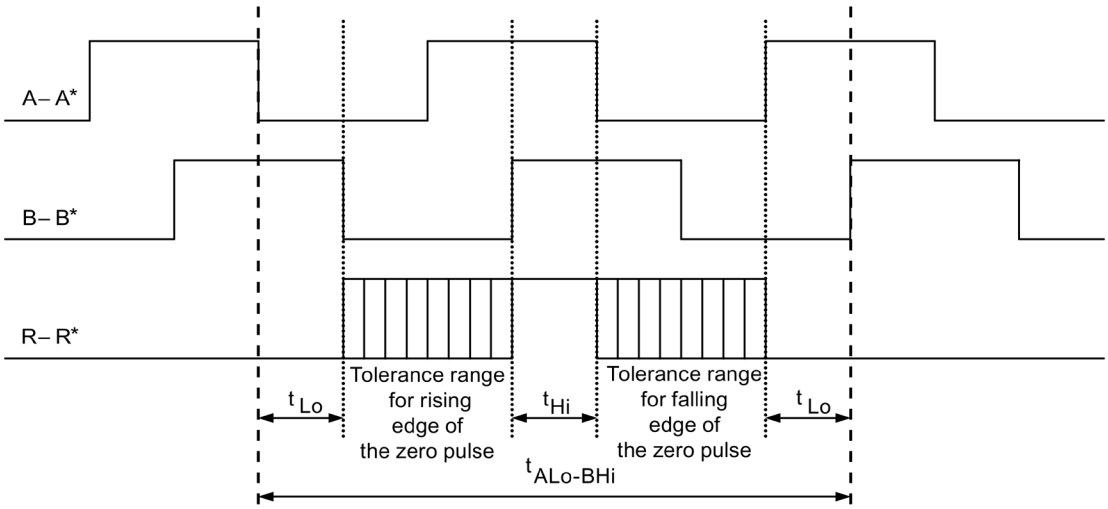

Figure 4-43 Position of the zero pulse to the track signals

For encoders with a 5-V supply at X521/X531, the cable length is dependent on the encoder current (this applies cable cross-sections of 0.5 mm²):

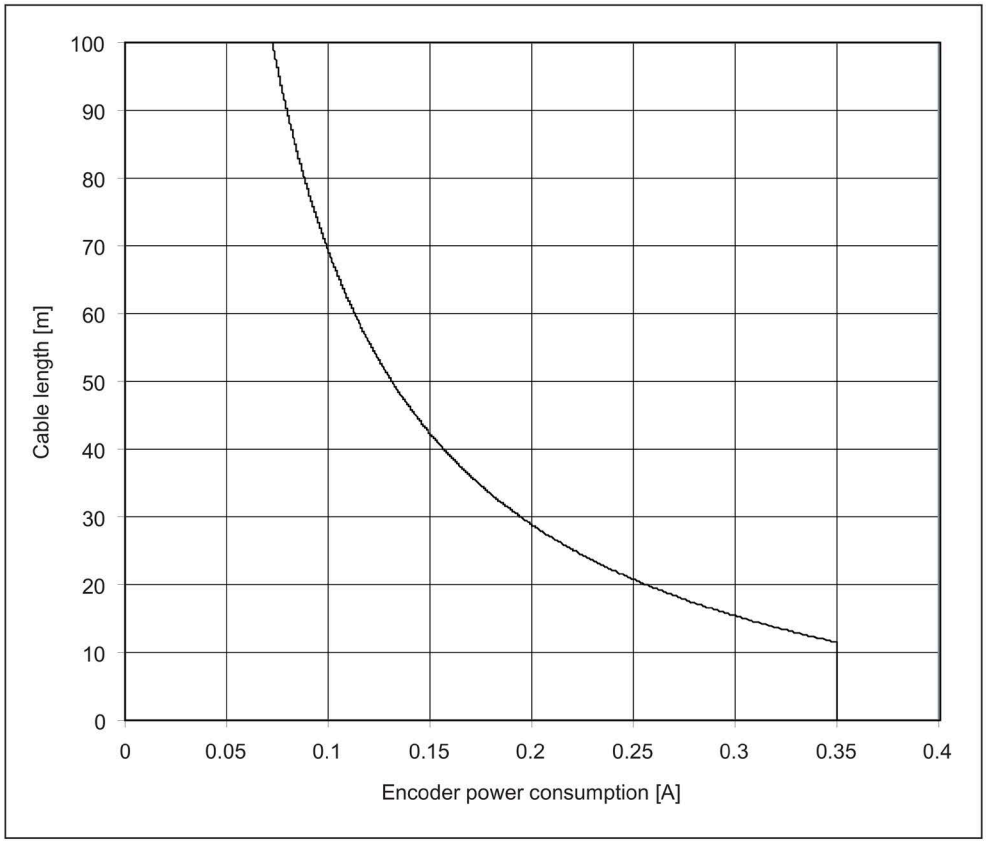

Figure 4-44 Signal cable length as a function of the encoder current consumption

For encoders without Remote Sense the permissible cable length is restricted to 100 m (reason: the voltage drop depends on the cable length and the encoder current).

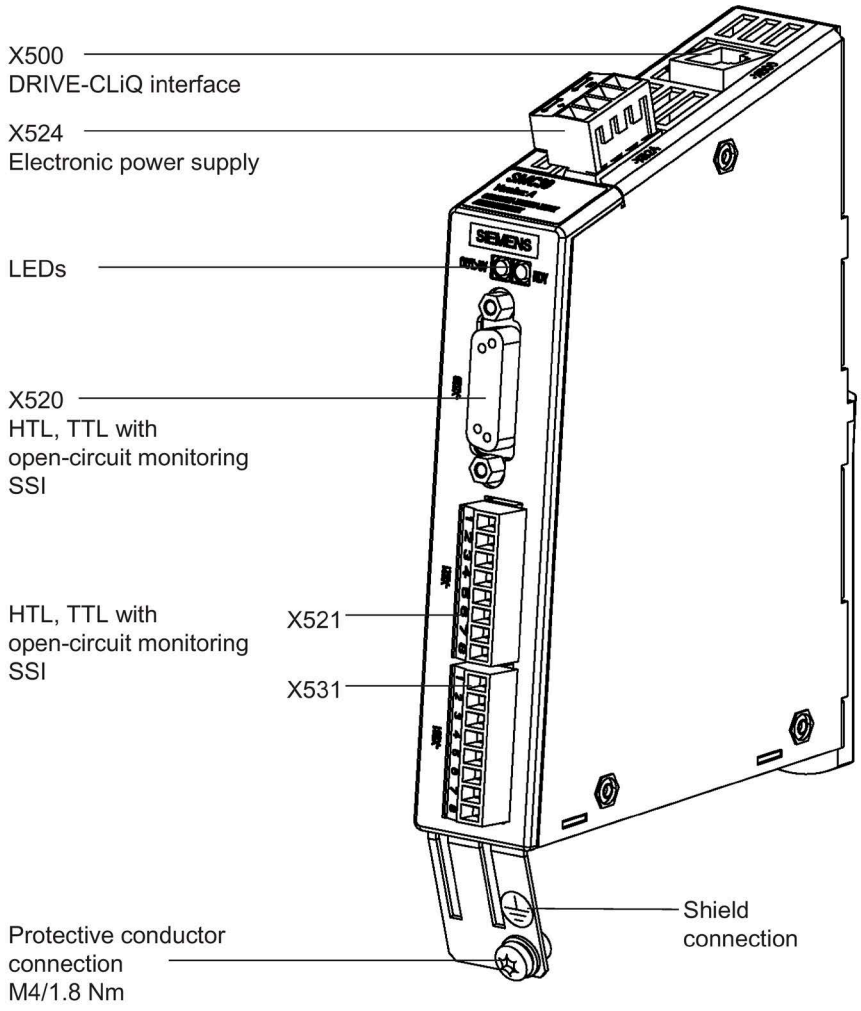

Figure 4-45 SMC30 Sensor Module

4.9.24.2 Connection

X520: Encoder connection 1 for HTL/TTL/SSI encoder with open-circuit monitoring

Table 4- 69 Encoder connection X520

Connector	Pin	Signal name	Technical data
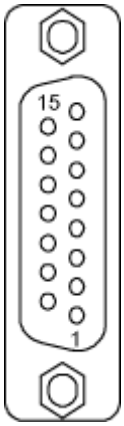	1	+Temp [1]	Temperature sensor connection KTY84-1C130 / PT1000 / PTC
	2	Clock	SSI clock
	3	Clock*	Inverse SSI clock
	4	P encoder 5 V/24 V	Encoder supply
	5	P encoder 5 V/24 V	Encoder supply
	6	P sense	Sense input encoder power supply
	7	M encoder (M)	Ground for encoder power supply
	8	-Temp [1]	Temperature sensor connection KTY84-1C130 / PT1000 / PTC
	9	M sense	Ground sense input
	10	R	Reference signal R
	11	R*	Inverse reference signal R
	12	B*	Inverse incremental signal B
	13	B	Incremental signal B
	14	A*/data*	Inverted incremental signal A / inverted SSI data
	15	A/data	Incremental signal A / SSI data
Connector type: 15-pin Sub-D socket			
Measuring current via temperature sensor connection: 2 mA			

[1] Accuracy of the temperature measurement:
- KTY: ±7 °C (including evaluation)
- PT1000: ±5 °C (PT1000 tolerance class B according to EN 60751 including evaluation)
- PTC: ±5 °C (including evaluation)

WARNING

Electric shock in the event of voltage flashovers at the temperature sensor

Voltage flashovers in the signal electronics can occur in motors without safe electrical separation of the temperature sensors.

- Only use temperature sensors that fully comply with the specifications of the safety isolation.

NOTICE

Device failure as a result of unshielded or incorrectly routed cables to temperature sensors

Unshielded or incorrectly routed cables to temperature sensors can result in interference being coupled into the signal processing electronics from the power side. This can result in significant disturbance of all signals (fault messages) up to failure of individual components (destruction of the devices).

- Only use shielded cables as temperature sensor cables.
- If temperature sensor cables are routed together with the motor cable, use separately shielded cables twisted in pairs.
- Connect the cable shield to ground potential through a large surface area.

NOTICE

Damage to motor in the event of incorrectly connected KTY temperature sensor

If a KTY temperature sensor is connected with incorrect polarity, it is not possible to detect when the motor overheats. Overheating can cause damage to the motor.

- Connect a KTY temperature sensor with the correct polarity.

NOTICE

Damage to the encoder due to incorrect supply voltage

The encoder power supply can be parameterized to 5 V or 24 V. The encoder may be damaged for an incorrect parameterization.

- Select the appropriate supply voltage.

X521 / X531: Encoder connection 2 for HTL/TTL/SSI encoder with open-circuit monitoring

Table 4- 70 Encoder connection X521

Connector	Terminal	Signal name	Technical data
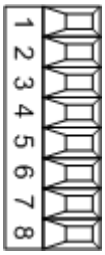	1	A	Incremental signal A
	2	A*	Inverse incremental signal A
	3	B	Incremental signal B
	4	B*	Inverse incremental signal B
	5	R	Reference signal R
	6	R*	Inverse reference signal R
	7	CTRL	Control signal
	8	M	Ground via inductivity
Max. connectable cross-section: 1.5 mm²			

Note

Operation of unipolar HTL encoders

When unipolar HTL encoders are deployed, A*, B*, and R* must be jumpered on the terminal block with M encoder (X531).

Table 4- 71 Encoder connection X531

Connector	Terminal	Signal name	Technical data
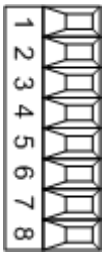	1	P encoder 5 V/24 V	Encoder supply
	2	M encoder	Ground for encoder power supply
	3	-Temp [1]	Temperature sensor KTY84-1C130 / PT1000 / PTC
	4	+Temp [1]	Temperature sensor KTY84-1C130 / PT1000 / PTC
	5	Clock	SSI clock
	6	Clock*	Inverse SSI clock
	7	Data	SSI data
	8	Data*	Inverted SSI data
Max. connectable cross-section: 1.5 mm²			
Measuring current via temperature sensor connection: 2 mA			

[1] Accuracy of the temperature measurement:
- KTY: ±7 °C (including evaluation)
- PT1000: ±5 °C (PT1000 tolerance class B according to EN 60751 including evaluation)
- PTC: ±5 °C (including evaluation)

WARNING

Electric shock in the event of voltage flashovers at the temperature sensor

Voltage flashovers in the signal electronics can occur in motors without safe electrical separation of the temperature sensors.

- Only use temperature sensors that fully comply with the specifications of the safety isolation.

NOTICE

Device failure as a result of unshielded or incorrectly routed cables to temperature sensors

Unshielded or incorrectly routed cables to temperature sensors can result in interference being coupled into the signal processing electronics from the power side. This can result in significant disturbance of all signals (fault messages) up to failure of individual components (destruction of the devices).

- Only use shielded cables as temperature sensor cables.
- If temperature sensor cables are routed together with the motor cable, use separately shielded cables twisted in pairs.
- Connect the cable shield to ground potential through a large surface area.

NOTICE

Damage to motor in the event of incorrectly connected KTY temperature sensor

If a KTY temperature sensor is connected with incorrect polarity, it is not possible to detect when the motor overheats. Overheating can cause damage to the motor.

- Connect a KTY temperature sensor with the correct polarity.

NOTICE

Damage to the encoder due to incorrect supply voltage

The encoder power supply can be parameterized to 5 V or 24 V. The encoder may be damaged for an incorrect parameterization.

- Select the appropriate supply voltage.

Note

Cable shield for the encoder connection via terminals

Note that when the encoder is connected via terminals, the cable shield must be applied to the module.

4.9.24.3 Connection examples

Connection example 1: HTL encoder, bipolar, without zero marker -> p0405 = 9 (hex)

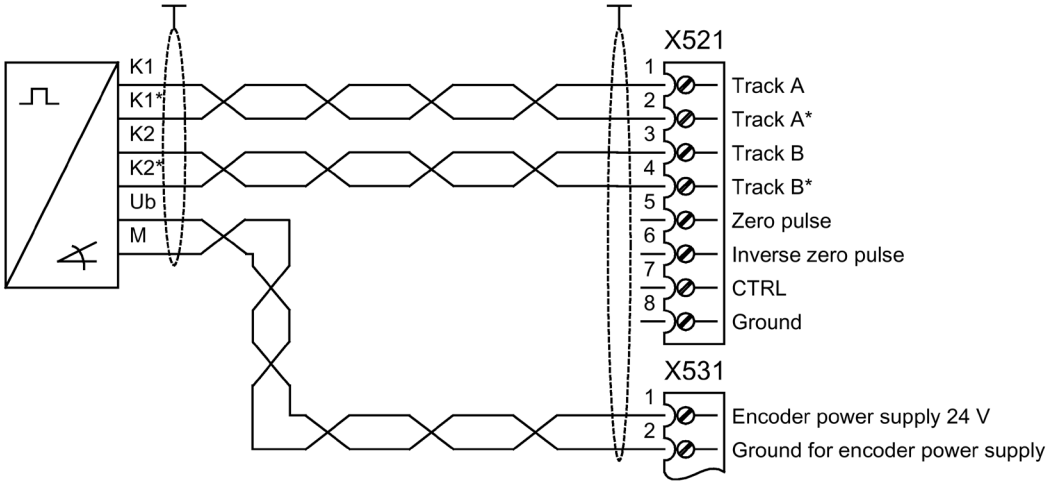

Figure 4-46 Connection example 1: HTL encoder, bipolar, without zero marker

Connection example 2: TTL encoder, unipolar, without zero marker -> p0405 = A (hex)

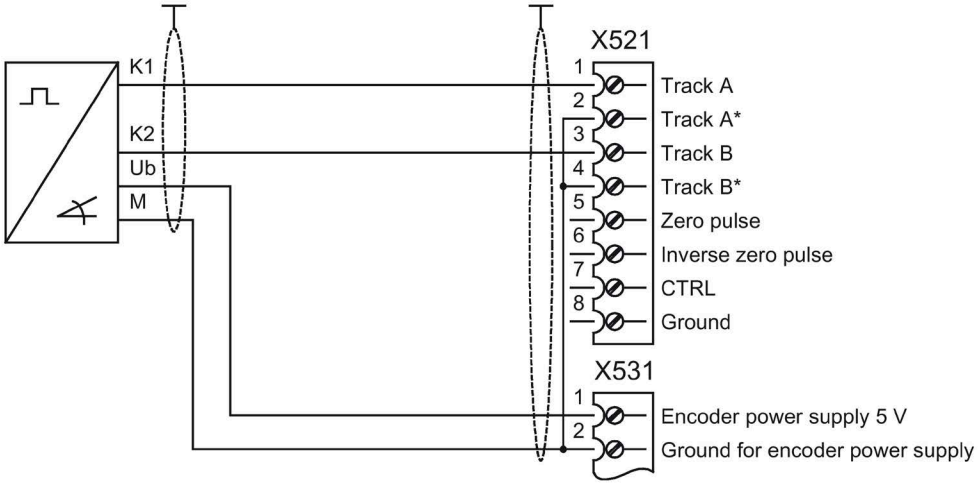

Figure 4-47 Connection example 2: TTL encoder, unipolar, without zero marker

4.9.25 Voltage Sensing Module for determining the actual motor speed and the phase angle (option K51)

Description

The VSM10 Voltage Sensing Module is used for acquiring the voltage characteristic on the motor side, so that the following functions can be implemented:

- Operation of a permanent-magnet synchronous motor without encoder with the requirement to be able to connect to a motor that is already rotating ("flying restart" function).
- Fast flying restart of large induction motors: The time for the demagnetization of the motor is eliminated as a result of the voltage sensing.

The terminals on the Voltage Sensing Module (-B51) are pre-assigned in the factory and must not be changed by the customer.

When operating a permanent-magnet synchronous motor without encoder, the "Flying restart" function must be activated with p1200.

Removing the connector jumper in the VSM10 Voltage Sensing Module

The connector jumper in terminal X530 on the lowerside of the component must be removed if you are using the cabinet unit on a non-grounded line supply (IT system) on the Voltage Sensing Module (VSM10).

Use two screwdrivers or a suitable tool in order to relieve the holding springs in the terminal and then withdraw the connector jumper.

Terminal X530 with connector jumper	Relieve the springs and withdraw the connector jumper

Note

False tripping caused by not removing the connection clip with a non-grounded line supply

Failure to remove the connection clip to the basic interference suppression module on a non-grounded line supply (IT system) can cause false tripping for a sensitive IT system monitoring.

- Remove the connection kit for a non-grounded line supply (IT system).

4.9.26 Additional SMC30 Sensor Module (option K52)

Description

With option K50, an SMC30 Sensor Module is included in the cabinet unit. The additional SMC30 Sensor Module enables reliable actual value acquisition when using Safety Integrated Extended Functions (requires a license: Option K01).

Note

Safety Integrated Function Manual

A detailed description of the full functionality and handling of the Safety Integrated functions can be found in the accompanying Function Manual. This manual is available as additional documentation on the customer DVD supplied with the device.

4.9.27 Customer terminal block (option G60)

Description

With option G60, a TM31 interface module (customer terminal block –A60) is already installed in the cabinet unit. This provides the following interfaces:

- 8 digital inputs
- 4 bidirectional digital inputs/outputs
- 2 relay outputs with changeover contact
- 2 analog inputs
- 2 analog outputs
- 1 temperature sensor input (KTY84-130/PTC)

The description of the interfaces is given in the Chapter "Electrical Installation/Signal connections"

Integration of the interfaces takes place using pre-interconnections prepared in the factory, which can be selected during commissioning.

4.9.28 Additional customer terminal block TM31 (option G61)

Description

With option G60, a TM31 interface module (customer terminal block –A60) is already installed in the cabinet unit. A second module (–A61) provides the following additional digital and analog inputs/outputs in the drive system:

- 8 digital inputs
- 4 bidirectional digital inputs/outputs
- 2 relay outputs with changeover contact
- 2 analog inputs
- 2 analog outputs
- 1 temperature sensor input (KTY84-130/PTC)

The second TM31 must be installed on the system side. Default settings are not provided.

4.9.29 Terminal Board TB30 (option G62)

Description

Figure 4-48 TB30 Terminal Board

The TB30 Terminal Board supports the addition of digital inputs/digital outputs and analog inputs/analog outputs to the Control Unit.

The following are located on the TB30 Terminal Board:

- Power supply for digital inputs/digital outputs
- 4 digital inputs
- 4 digital outputs
- 2 analog inputs
- 2 analog outputs

The TB30 Terminal Board plugs into the option slot on the Control Unit.

A shield connection for the signal cable shield is located on the Control Unit.

NOTICE
Damage or malfunctions to the Option Board by inserting and withdrawing in operation Withdrawing and inserting Option Boards during operation can damage them or cause the Option Boards to malfunction. • Only withdraw or insert Option Boards when the Control Unit is in a no voltage state.

The module is inserted in the option slot of the Control Unit at the factory.

Interface overview

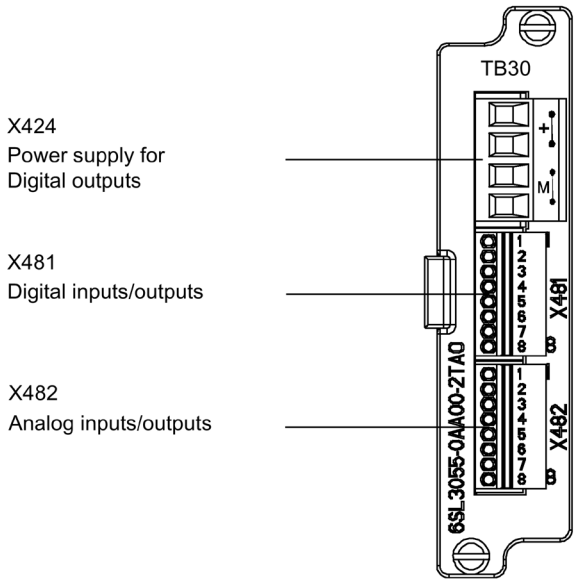

Figure 4-49 TB30 Terminal Board interface overview

Connection overview

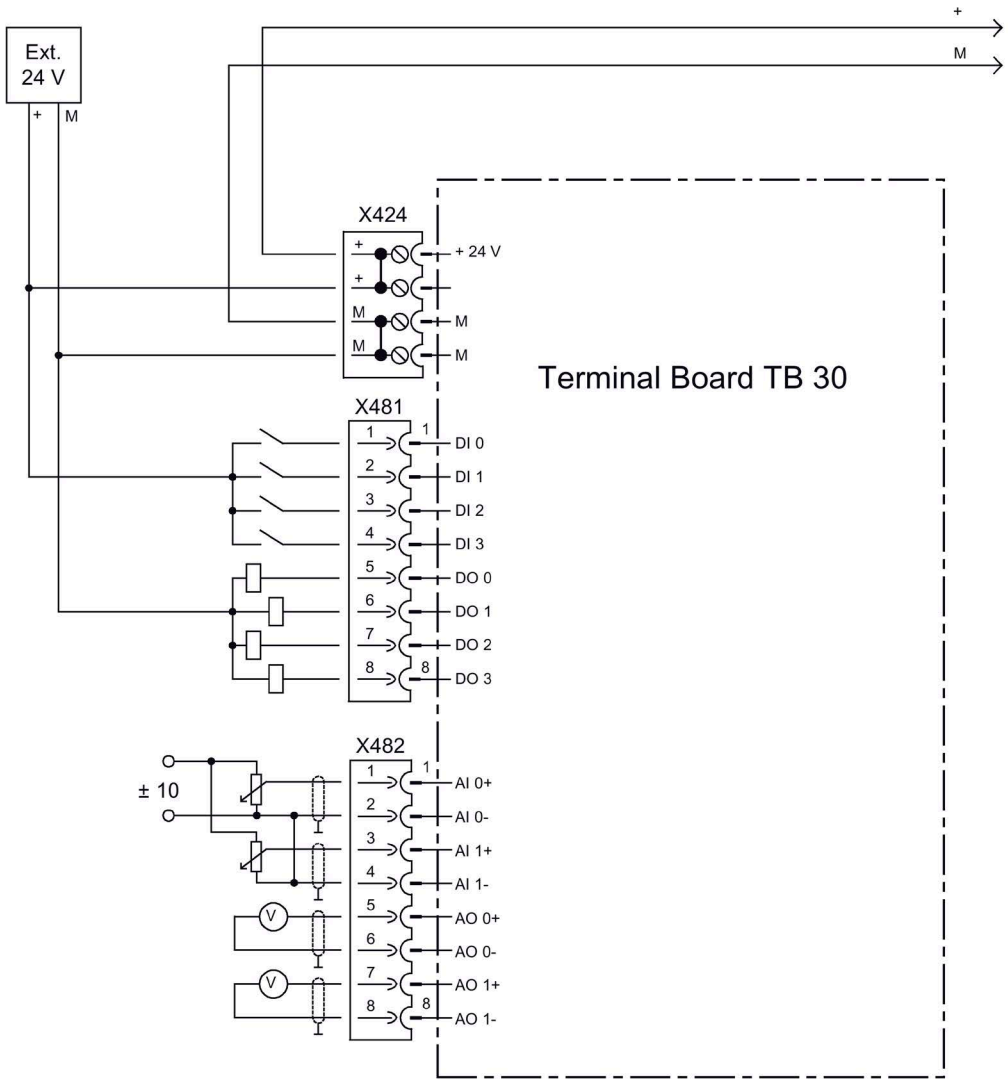

Figure 4-50 Connection overview TB30 Terminal Board

X424 power supply, digital outputs

Table 4- 72 Terminal block X424

Connector	Terminal	Function	Technical data
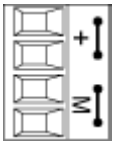	+	Power supply	Voltage: 24 V DC (20.4 ... 28.8 V) Current consumption: Max. 4 A (per digital output max. 0.5 A) Max. current via jumper in connector: 20 A (15 A according to UL/CSA)
	+	Power supply	
	M	Ground	
	M	Ground	
Max. connectable cross-section: 2.5 mm²			

The maximum cable length that can be connected is 10 m.

Note

The two "+" and "M" terminals are jumpered in the connector. This ensures that the supply voltage is looped through.

This power supply is required for the digital outputs only.
The electronics power supply and the power supply for the analog inputs/outputs are taken from the option slot of the Control Unit.

Note

The power supply of the digital outputs and the electronic power supply of the Control Unit are isolated.

Note

If the 24 V supply is briefly interrupted, then the digital outputs are deactivated during this time.

X481 Digital inputs/outputs

Table 4- 73 Terminal block X481

Connector	Terminal	Designation [1]	Technical data
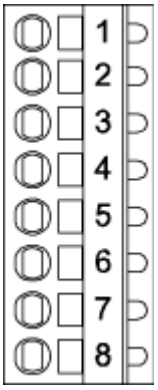	1	DI 0	Voltage: - 3 ... 30 V Current drain, typical: 10 mA at 24 V DC Ground reference: X424.M Input delay: - For "0" to "1": 20 µs - for "1" to "0": 100 µs Level (incl. ripple) High level: 15 ... 30 V Low level: -3 ... 5 V
	2	DI 1	
	3	DI 2	
	4	DI 3	
	5	DO 0	Voltage: 24 V DC Max. load current per output: 500 mA Ground reference: X424.M Continued-short-circuit-proof Output delay: - for "0" to "1": Typ. 150 µs at 0.5 A resistive load (500 µs maximum) - For "1" to "0": Typically 50 µs at 0.5 A resistive load Switching frequency: - For resistive load: Max. 100 Hz - For inductive load: Max. 0.5 Hz - For lamp load: Max. 10 Hz Maximum lamp load: 5 W
	6	DO 1	
	7	DO 2	
	8	DO 3	
Max. connectable cross-section: 0.5 mm^2			

[1] DI: digital input, DO: Digital output

Note

Open input

An open input is interpreted as "low".

The power supply and the digital inputs/outputs are isolated from the Control Unit.

Note

Transient voltage interruptions

If the 24 V supply is briefly interrupted, then the digital outputs are deactivated during this time.

X482 Analog inputs/outputs

Table 4- 74 Terminal block X482

Connector	Terminal	Designation [1]	Technical data
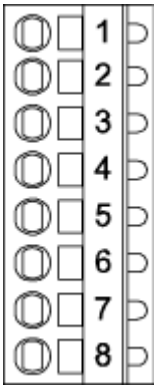	1	AI 0+	Analog inputs (AI) **Voltage**: -10 ... +10 V; R_i: 65 kΩ **Common mode range**: ±30 V **Resolution**: 13 bits + sign
	2	AI 0-	
	3	AI 1+	
	4	AI 1-	
	5	AO 0+	Analog outputs (AO) **Voltage range**: -10 ... +10 V **Load current**: max. -3 ... +3 mA **Resolution**: 11 bit + signed Continuous short-circuit proof
	6	AO 0-	
	7	AO 1+	
	8	AO 1-	
Max. connectable cross-section: 0.5 mm²			

[1] AI: analog input, AO: Analog output

Note

Permissible voltage values

In order to avoid incorrect results of the analog-digital conversion, the analog differential voltage signals can have a maximum offset voltage of +/-30 V with respect to ground potential.

Note

Open input

An open input is interpreted as approximately "0 V".

The power supply of the analog inputs/outputs is drawn via the option slot of the Control Unit and not via X424.

The shield is connected to the Control Unit.

Shield connection of the TB30 on the Control Unit

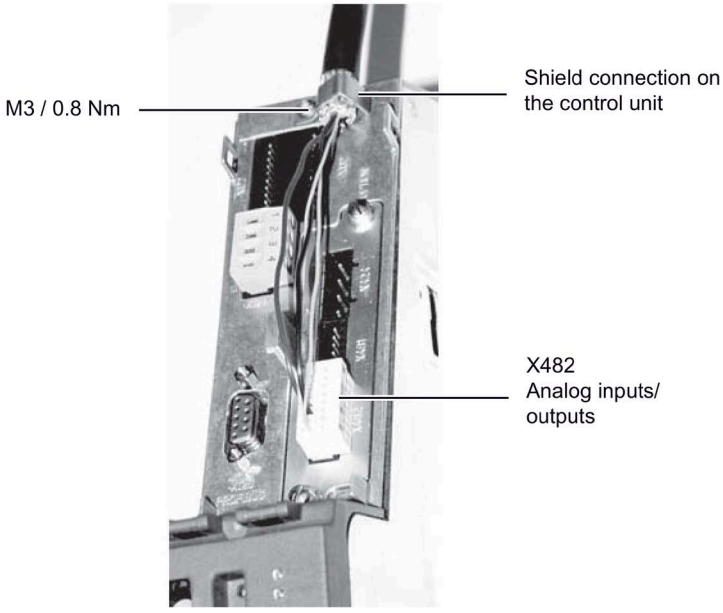

Figure 4-51 TB30 shield connection

The permissible bending radii for the cables must not be exceeded when the cables are being installed.

4.9.30 Safety license for 1 axis (option K01)

Description

The Safety Integrated Basic functions do not require a license. A license is, however, required for each axis with safety functions in the case of Safety Integrated Extended functions. It is irrelevant which safety functions are used and how many.

With option K01, the Safety license for 1 axis is included on the CompactFlash Card and activated.

Licenses

The required license can optionally be ordered with the CompactFlash card.

Subsequent licensing is realized in the Internet using the "WEB License Manager" by generating a license key:
http://www.siemens.com/automation/license

Activation

The associated license key is entered into parameter p9920 in the ASCII code. The license key is activated using parameter p9921 = 1.

Diagnostics

An insufficient license is indicated via the following alarm and LED:

- Alarm A13000 → License not sufficient
- LED READY → Flashes green/red at 0.5 Hz

Note

Safety Integrated Function Manual

Detailed and comprehensive instructions and information for the Safety Integrated functions can be found in the accompanying Function Manual. This manual is available as additional documentation on the customer DVD supplied with the device.

4.9.31 Terminal module for activation of "Safe Torque Off" and "Safe STOP 1" (option K82)

Description

Option K82 (Terminal Module for activating "Safe Torque Off" and "Safe Stop 1") is for isolated activation via a variable control-voltage range of the safety functions already present in the standard version, which can also be deployed without option K82.

Option K82 is for activating the following Safety Integrated functions (terminology according to draft IEC 61800-5-2):

- Safe torque off (STO)
- Safe Stop 1 (SS1, time-controlled)

Note

Standards requirements

The integrated safety functions, starting from the Safety Integrated (SI) input terminals of the SINAMICS components (Control Unit, Motor Module), satisfy the requirements according to EN 61800-5-2, EN 60204-1, EN ISO 13849-1 category 3 (formerly EN 954-1) for Performance Level (PL) d and EN 61508 SIL 2.

In combination with option K82, the requirements specified in EN 61800-5-2, EN 60204-1 as well as in EN ISO 13849-1 Category 3 (formerly EN 954-1) are satisfied for Performance Level (PL) d and EN 61508 SIL 2.

Note

Safety Integrated Function Manual

Detailed and comprehensive instructions and information for the Safety Integrated functions can be found in the accompanying Function Manual. This manual is available as additional documentation on the customer DVD supplied with the device.

4.9.32 Terminal Module TM54F (option K87)

Figure 4-52 TM54F Terminal Module (option K87)

Description

The TM54F Terminal Module is a terminal expansion module with safe digital inputs and outputs for controlling the Safety Integrated Extended functions of SINAMICS.

The TM54F is directly connected to a Control Unit via DRIVE-CLiQ.

TM54F features the following interfaces:

Table 4- 75 Overview of the TM54F interfaces

Type	Quantity
Fail-safe digital outputs (F-DO)	4
Fail-safe digital inputs (F-DI)	10
Sensor[1] power supplies, dynamic response supported [2]	2
Sensor[1] power supply, no dynamic response	1
Digital inputs to check F_DO for a test stop	4

[1] Sensors: Fail-safe devices to issue commands and sense, for example, emergency stop pushbuttons and safety locks, position switches and light arrays/light curtains.

[2] Dynamic response: The sensor power supply is switched on and off by the TM54F when the forced dormant error detection is active for the sensors, cable routing, and the evaluation electronics.

The TM54F provides 4 fail-safe digital outputs and 10 fail-safe digital inputs. A fail-safe digital output consists of a 24 VDC switching output, a ground switching output, and a digital input for checking the switching state. A fail-safe digital input comprises two digital inputs.

Note

Rated values of the F-DO

The rated values of the F-DO meet the requirements of EN 61131-2 for digital DC outputs with 0.5 A rated current.

The operating ranges of the F-DI meet the requirements of EN 61131-2 for Type 1 digital inputs.

Note

Shielding cables

Please note that the F-DIs must take the form of shielded cables if they are > 30 m in length.

Note

Safety Integrated Function Manual

A detailed description of the full functionality and handling of the Safety Integrated functions can be found in the accompanying Function Manual. This manual is available as additional documentation on the customer DVD supplied with the device.

4.9.33 Safe Brake Adapter SBA 230 V AC (option K88)

Description

Safe Brake Control (SBC) is a safety function that is used in safety-related applications. In the no-current state, the brake acts on the motor of the drive using spring force. The brake is released (opened) when current flows through it (=low active).

The Safe Brake Adapter 230 VAC is installed in the cabinet unit in the factory. An infeed is connected to terminal -X12 on the Safe Brake Adapter for the power supply. For control, a connection is established between the Safe Brake Adapter and the Control Interface Module via a cable harness installed in the factory.

For controlling the brake, a connection must be established on-site between terminal -X14 on the Safe Brake Adapter and the rectifier of the brake. Direct connection of AC brakes is not permissible.

NOTICE

Device failure caused by connecting a 24 VDC brake

When a 24 VDC brake is connected to option K88 (Safe Brake Adapter 230 VAC) this can damage the Safe Brake Adapter and cause the device to fail (when the brake closes this is not displayed on an LED, the fuses can then rupture, the relay contact service life is reduced).

- Do not connect a 24 VDC brake to the 230 VAC Safe Brake Adapter.

Note

Maximum cable length of the brake control

The maximum permissible cable length of 300 m between the Safe Brake Adapter 230 VAC and the brake must be observed. To accurately calculate the maximum cable length, see the SINAMICS Low Voltage Configuration Manual on the customer DVD supplied with the device.

Fast de-energization

Some brake rectifier types are equipped with two additional connections for switching the brake load on the DC side. This allows the brake coil to be quickly de-energized, i.e. braking starts earlier.

The Safe Brake Adapter supports such fast de-energizing using the two additional connections -X15:1 and -X15:2. This function does not belong to safe brake control.

Notes

Note

Replacement fuses

The article numbers for spare fuses can be taken from the spare parts list supplied.

Note

Standards requirements

The integrated safety functions, starting from the Safety Integrated (SI) input terminals of the SINAMICS components (Control Unit, Motor Module), satisfy the requirements according to EN 61800-5-2, EN 60204-1, DIN EN ISO 13849-1 Category 3 (formerly EN 954-1) for Performance Level (PL) d and IEC 61508 SIL2.

With the Safe Brake Adapter (option K88), the requirements specified in EN 61800-5-2, EN 60204-1, DIN EN ISO 13849-1 Category 3 (formerly EN954-1) as well as for Performance Level (PL) d and IEC 61508 SIL 2 are fulfilled.

Note

Safety Integrated Function Manual

A detailed description of the full functionality and handling of the Safety Integrated functions can be found in the accompanying Function Manual. This manual is available as additional documentation on the customer DVD supplied with the device.

4.9.34 Control Unit CU320-2 PN (option K95)

With Option K95, the cabinet unit contains a CU320-2 PN control unit, which handles the communication and open-loop/closed-loop control functions.

A PROFINET interface is available for higher-level communication.

Connection overview

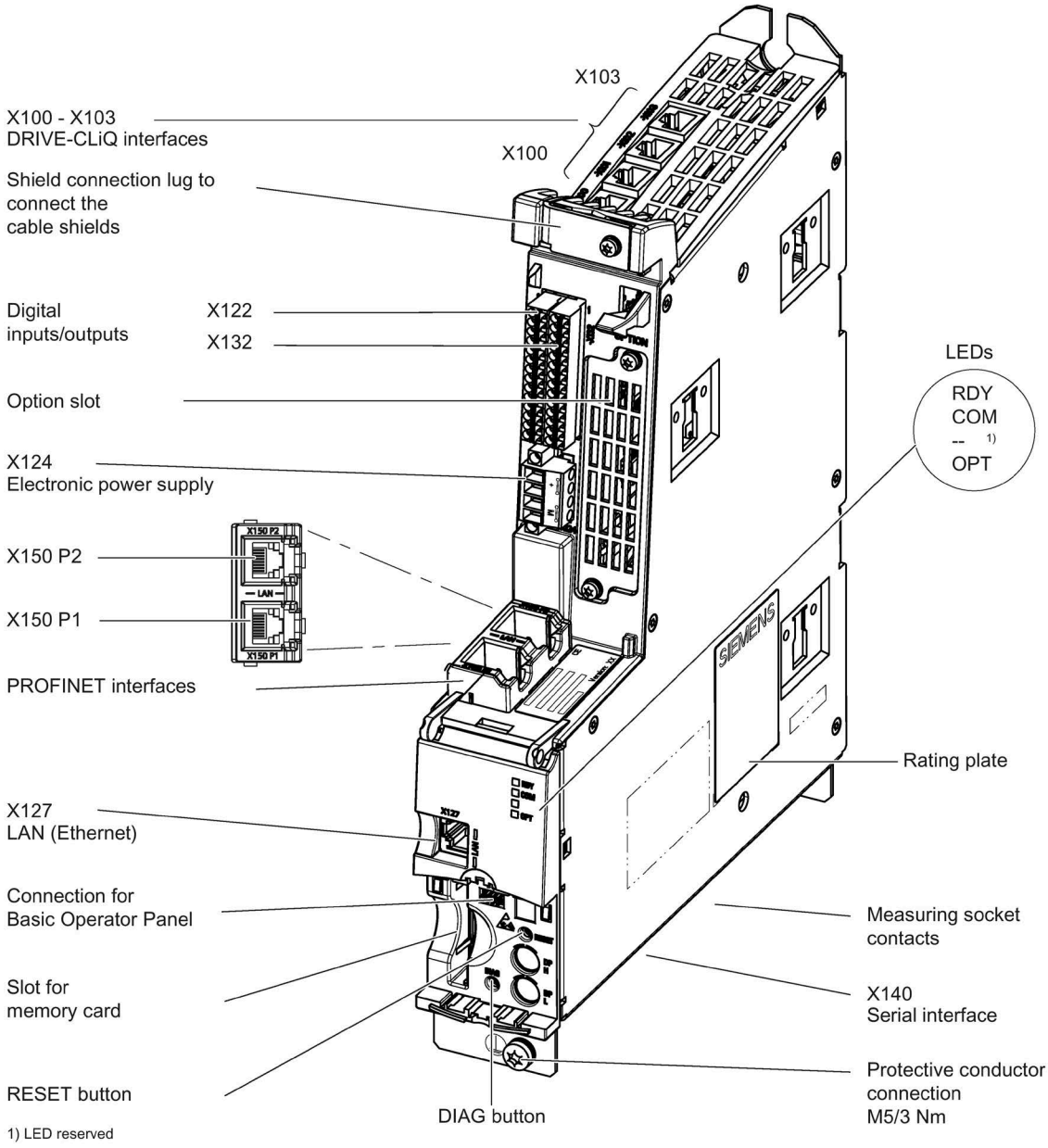

Figure 4-53 Connection overview of CU320-2 PN Control Unit (without cover)

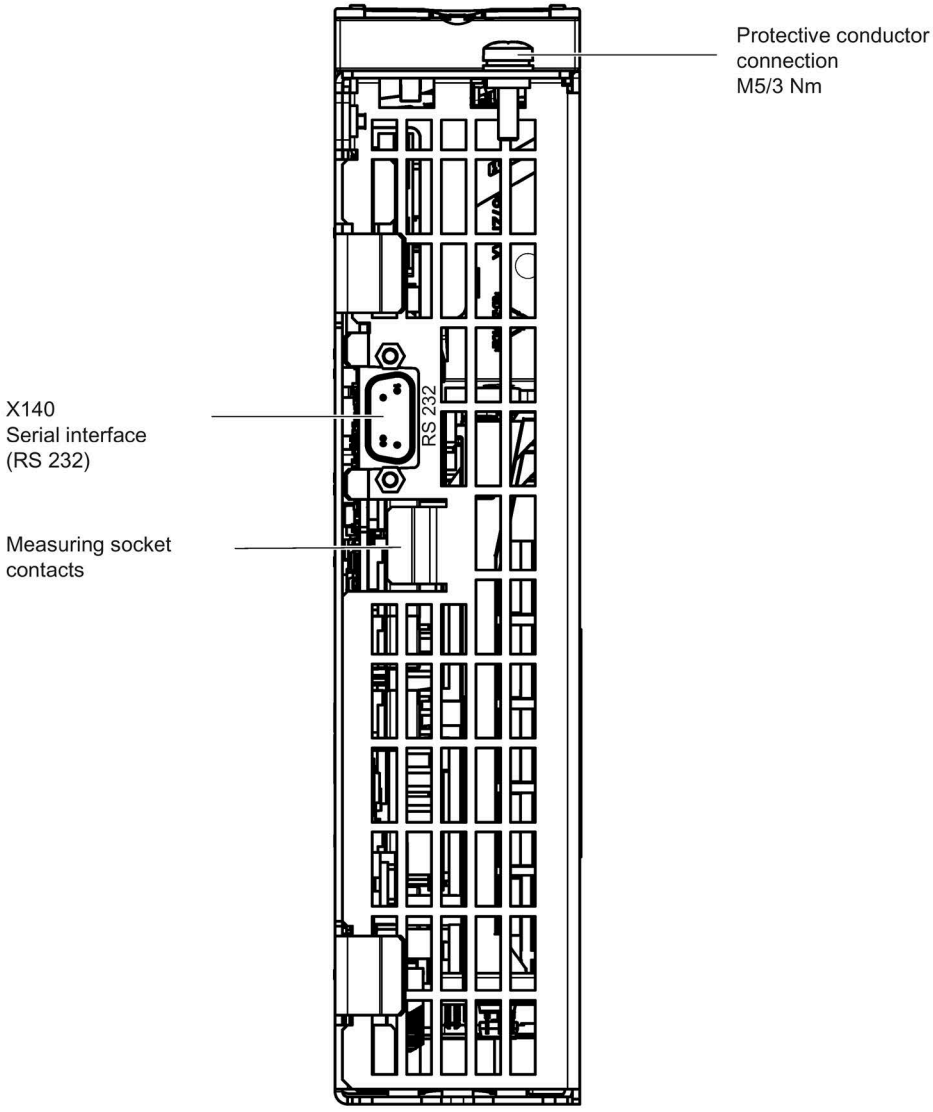

Figure 4-54 Interface X140 and measuring sockets T0 to T2 - CU320-2 PN (view from below)

NOTICE
Malfunctions or damage to the option board by inserting and withdrawing in operation Withdrawing and inserting the option board in operation can damage it or cause it to malfunction. • Only withdraw or insert the Option Board when the Control Unit is in a no-current condition.

Connection example

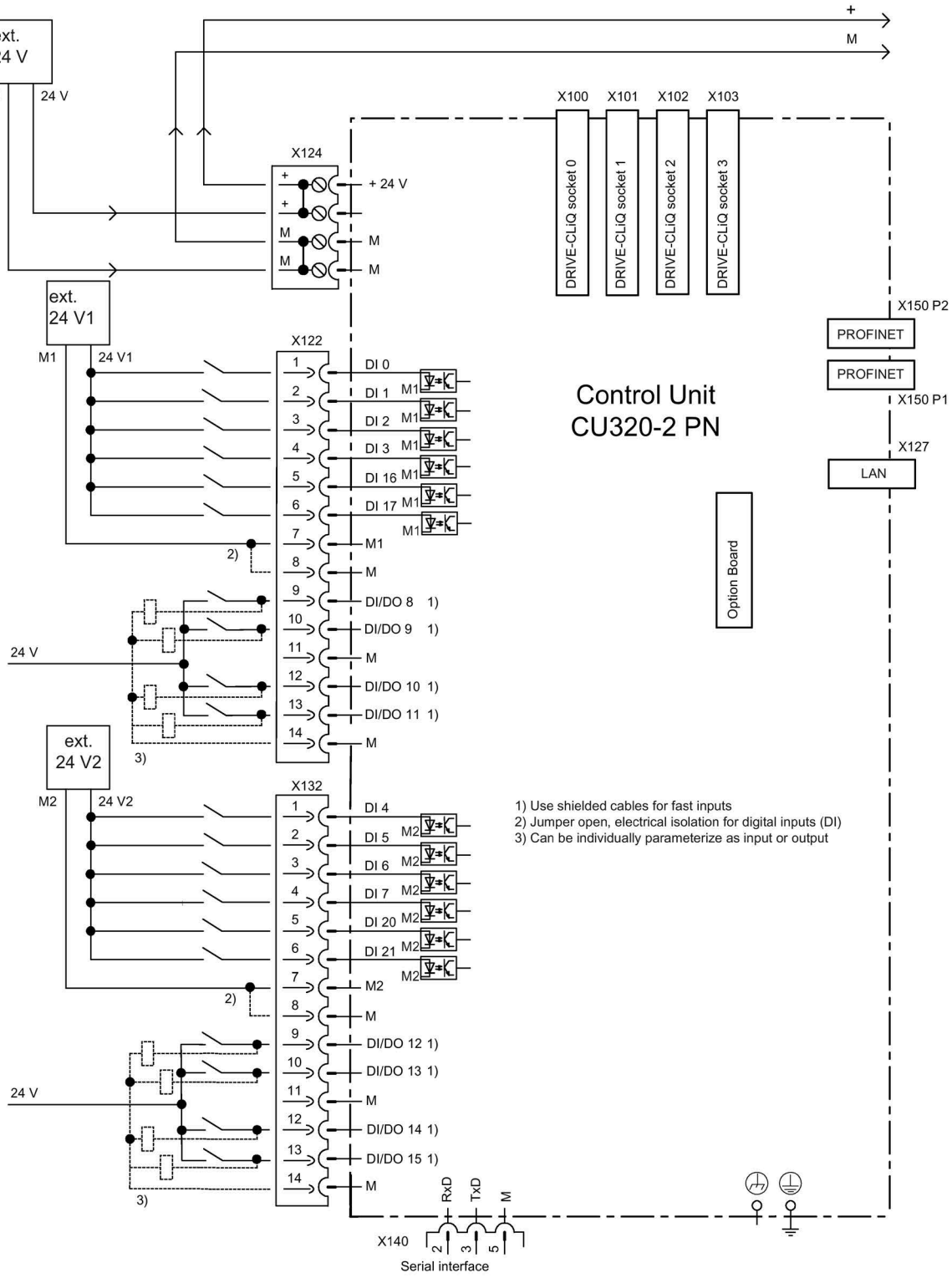

Figure 4-55 Connection example, CU320-2 PN

X100 to X103: DRIVE-CLiQ interface

Table 4- 76 DRIVE-CLiQ interface X100 – X103

Connector	Pin	Signal name	Technical data
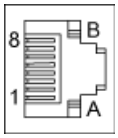	1	TXP	Transmit data +
	2	TXN	Transmit data -
	3	RXP	Receive data +
	4	Reserved, do not use	
	5	Reserved, do not use	
	6	RXN	Receive data -
	7	Reserved, do not use	
	8	Reserved, do not use	
	A	+ (24 V)	Power supply
	B	M (0 V)	Electronics ground
Connector type: RJ45 socket Blanking plate for DRIVE-CLiQ interfaces (50 pcs.) Article number: 6SL3066-4CA00-0AA0			

X122: Digital inputs/outputs

Table 4- 77 Terminal block X122

Connector	Pin	Designation [1]	Technical data
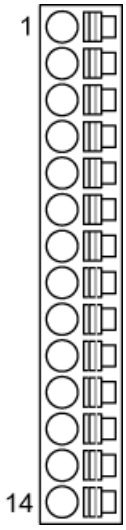	1	DI 0	Voltage (max.): -3 ... +30 V DC Typical power consumption: 9 mA at 24 V Electrical isolation: reference potential is terminal M1 Level (with ripple) High level: 15 ... 30 V Low level: -3 ... +5 V Input delay (typ.): For "0" → "1": 50 µs For "1" → "0": 150 µs
	2	DI 1	
	3	DI 2	
	4	DI 3	
	5	DI 16	
	6	DI 17	
	7	M1	Reference potential for terminal 1 ... 6
	8	M	Electronics ground
	9	DI/DO 8	**As input**: Voltage: -3 ... +30 VDC Current consumption, typical: 9 mA at 24 V Level (with ripple) High level: 15 ... 30 V Low level: -3 ... +5 V DI/DO 8, 9, 10, and 11 are "high-speed inputs" [2] Input delay (typ.): For "0" → "1": 5 µs For "1" → "0": 50 µs **As output**: Voltage: 24 V DC Max. load current per output: 500 mA Continuous short-circuit proof Output delay (typ./max.): [3] For "0" → "1": 150 µs / 400 µs For "1" → "0": 75 µs / 100 µs Switching frequency: For resistive load: Max. 100 Hz For inductive load: Max. 0.5 Hz For lamp load: Max. 10 Hz Maximum lamp load: 5 W
	10	DI/DO 9	
	11	M	
	12	DI/DO 10	
	13	DI/DO 11	
	14	M	
Max. connectable cross-section: 1.5 mm²			

[1] DI: digital input; DI/DO: bidirectional digital input/output; M: Electronics ground M1: reference potential

[2] The rapid inputs can be used as probe inputs or as inputs for the external zero mark.

[3] Data for: V_{cc} = 24 V; load 48 Ω; high ("1") = 90% V_{out}; low ("0") = 10% V_{out}

The maximum cable length that can be connected is 30 m.

Note

Ensuring the function of digital inputs

An open input is interpreted as "low".

Terminal M1 must be connected so that the digital inputs (DI) can function.

This is achieved through one of the following measures:

1. Also route the reference ground of the digital inputs.
2. A jumper to terminal M. (**Note:** This removes the electrical isolation for these digital inputs.)

Note

If the 24 V supply is briefly interrupted, then the digital outputs are deactivated during this time.

X132: Digital inputs/outputs

Table 4- 78 Terminal block X132

Connector	Pin	Designation [1]	Technical data
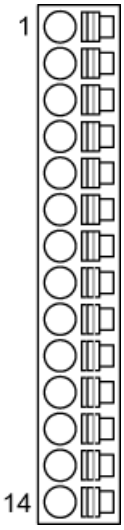	1	DI 4	Voltage (max.): -3 ... +30 VDC Current consumption, typical: 9 mA at 24 V Electrical isolation: The reference potential is terminal M2 Level (including ripple) High level: 15 ... 30 V Low-level: -3 ... +5 V Input delay (typ.): For "0" → "1": 50 µs For "1" → "0": 150 µs
	2	DI 5	
	3	DI 6	
	4	DI 7	
	5	DI 20	
	6	DI 21	
	7	M2	Reference potential for terminal 1 ... 6
	8	M	Electronics ground
	9	DI/DO 12	**As input**: Voltage: -3 ... +30 VDC Current consumption, typical: 9 mA at 24 V Level (including ripple) High level: 15 ... 30 V Low-level: -3 ... +5 V DI/DO 12, 13, 14, and 15 are "high-speed inputs" [2] Input delay (typ.): For "0" → "1": 5 µs For "1" → "0": 50 µs **As output**: Voltage: 24 V DC Max. load current per output: 500 mA Continuous short-circuit proof Output delay (typ./max.): [3] For "0" → "1": 150 µs / 400 µs For "1" → "0": 75 µs / 100 µs Switching frequency: For resistive load: Max. 100 Hz For inductive load: Max. 0.5 Hz For lamp load: Max. 10 Hz Maximum lamp load: 5 W
	10	DI/DO 13	
	11	M	
	12	DI/DO 14	
	13	DI/DO 15	
	14	M	
Max. connectable cross-section: 1.5 mm²			

[1] DI: digital input; DI/DO: bidirectional digital input/output; M: Electronics ground; M2: reference potential

[2] The rapid inputs can be used as probe inputs or as inputs for the external zero mark

[3] Data for: V_{cc} = 24 V; load 48 Ω; high ("1") = 90% V_{out}; low ("0") = 10% V_{out}

The maximum cable length that can be connected is 30 m.

Note

Ensuring the function of digital inputs

An open input is interpreted as "low".

To enable the digital inputs (DI) to function, terminal M2 must be connected.

This is achieved through one of the following measures:

1. Also route the reference ground of the digital inputs.
2. A jumper to terminal M. (**Note:** This removes the electrical isolation for these digital inputs.)

Note

If the 24 V supply is briefly interrupted, then the digital outputs are deactivated during this time.

X127: LAN (Ethernet)

Note

Use

Ethernet interface X127 is intended for commissioning and diagnostics, which means that it must always be accessible (e.g. for service).

Further, the following restrictions apply to X127:

- Only local access is possible
- No networking - or only local networking in a closed and locked electrical cabinet permissible

If it is necessary to remotely access the electrical cabinet, then additional security measures must be applied so that misuse through sabotage, unqualified data manipulation and intercepting confidential data is completely ruled out (also see Chapter "Industrial Security (Page 26)").

Table 4- 79 X127 LAN (Ethernet)

Connector	Pin	Designation	Technical data
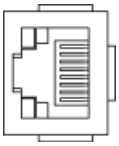	1	TXP	Ethernet transmit data +
	2	TXN	Ethernet transmit data -
	3	RXP	Ethernet receive data +
	4	Reserved, do not use	
	5	Reserved, do not use	
	6	RXN	Ethernet receive data -
	7	Reserved, do not use	
	8	Reserved, do not use	
Connector type: RJ45 socket			

Note

The LAN (Ethernet) interface does not support Auto MDI(X). If the LAN interface of the communication partner also cannot handle auto-MDI(X), then a crossover cable must be used to establish the connection.

For diagnostic purposes, the X127 LAN interface features a green and a yellow LED. These LEDs indicate the following status information:

Table 4- 80 LED statuses for the X127 LAN interface

LED	Color	State	Description
Link port	-	Off	Missing or faulty link
	Green	Continuous light	10 or 100 Mbit link available
Activity port	-	Off	No activity
	Yellow	Flashing light	Sending or receiving

X140: serial interface (RS232)

The AOP30 operator panel for operating/parameterizing the device can be connected via the serial interface. The interface is located on the underside of the Control Unit.

Table 4- 81 Serial interface (RS232) X140

Connector	Pin	Designation	Technical data
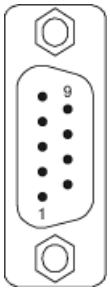	2	RxD	Receive data
	3	TxD	Transmit data
	5	Ground	Ground reference
Connector type: 9-pin SUB D connector			

Note

Connecting cable to the AOP30

The connection cable to AOP30 may only contain the three contacts which are shown in the drawing; a completely allocated cable may not be used.

X150 P1/P2 PROFINET interface

Table 4- 82 X150 P1 and X150 P2 PROFINET

Connector	Pin	Signal name	Technical data
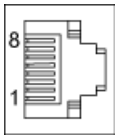	1	RXP	Receive data +
	2	RXN	Receive data -
	3	TXP	Transmit data +
	4	Reserved, do not use	
	5	Reserved, do not use	
	6	TXN	Transmit data -
	7	Reserved, do not use	
	8	Reserved, do not use	
Connector type: RJ45 socket Cable type: PROFINET			

Note

Connection cables

The PROFINET interfaces support Auto MDI(X). It is therefore possible to use both crossover and non-crossover cables to connect the devices.

For diagnostic purposes, the two PROFINET interfaces are each equipped with a green and a yellow LED. These LEDs indicate the following status information:

Table 4- 83 LED states on the X150 P1/P2 PROFINET interface

LED	Color	State	Description
Link port	-	Off	Missing or faulty link
	Green	Continuous light	10 or 100 Mbit link available
Activity port	-	Off	No activity
	Yellow	Flashing light	Data is being received or sent at port x

T0, T1, T2: Measuring socket contacts

Table 4- 84 Measuring socket contacts T0, T1, T2

Connector	Socket	Function	Technical data
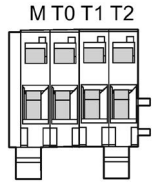	M	Ground	Voltage: 0... 5 V Resolution: 8 bits Load current: max. 3 mA Continuous short-circuit proof The reference potential is terminal M
	T0	Measuring socket contact 0	
	T1	Measuring socket contact 1	
	T2	Measuring socket contact 2	
PCB plug connector from Phoenix Contact, type: ZEC 1.0/ 4-ST-3.5 C1 R1.4, order number: 1893708			

Note

Cable cross section

The measuring socket contacts are only suitable for cable cross-sections of 0.2 mm^2 to 1 mm^2.

Note

Using the measuring socket contacts

The measuring socket contacts support commissioning and diagnostic functions. It must not be connected for normal operation.

DIAG button

The DIAG pushbutton is reserved for service functions.

Slot for the memory card

Figure 4-56 Slot for the memory card

Note

Plant standstill by withdrawing or inserting the memory card during operation

If the memory card is withdrawn or inserted during operation, then data can be lost, possibly resulting in a plant standstill.

- Only withdraw and insert the memory card when the Control Unit is in a no-voltage condition.

Note

Insertion direction for the memory card

Only insert the memory card as shown in the photo above (arrow at top right).

NOTICE

Memory card damage caused by electric fields or electrostatic discharge

Electrical fields or electrostatic discharge may result in the memory card being damaged and so cause malfunctions.

- When removing and inserting the memory card, always observe the ESD regulations.

Note

Data loss when the Control Unit with memory card is returned

When returning a defective Control Unit for repair or testing, the data on the memory card (parameters, firmware, licenses, etc.) could be lost.

- Do not return the memory card as well, but rather keep it in a safe place so that it can be inserted in the replacement unit.

Note

Please note that only SIEMENS memory cards can be used to operate the Control Unit.

4.9.35 NAMUR terminal block (option B00)

Description

The terminal block is designed in accordance with the requirements and guidelines defined by the standards association for measurement and control systems in the chemical industry (NAMUR – recommendation NE37), that is, certain device functions are assigned to fixed terminals. The inputs and outputs assigned to the terminals fulfill PELV ("protective extra-low voltage and protective separation") requirements.

The terminal block only contains the necessary functions. Unlike the NAMUR recommendation, optional terminals are not available.

The 24 V DC supply is provided on site via terminals -X2:1-3 (fuse-protected for 1 A in the converter). You must ensure that the PELV safety requirements (protective extra-low voltage with protective separation) are fulfilled.

To monitor the temperature of explosion-proof motors, option B00 features a PTC thermistor release mechanism with PTB approval. Shutdown if limit value is exceeded. The associated PTC sensor is connected to terminal -X3:90, 91.

The terminal block is divided into three sections:

- -X1; -X2: for the power connections
- -X2: for signal cables, which must fulfill PELV requirements with electrical separation.
- -X3: for connecting the motor PTC thermistor detector

Connection

Table 4- 85 Terminal block -X2 – connection 24 V supply

Terminal	Designation	Default	Comment
1	M	Reference conductor	
2	P24 V	24 V DC infeed	Protected internally with fuse (1 A)
3	P24 V	24 V DC outgoing circuit	
Max. connectable cross-section: 2.5 mm²			

Table 4- 86 Terminal block -X2 – connection NAMUR control terminal block

Terminal	Designation	Default	Comment
10	DI	ON/OFF (dynamic)/ ON/OFF (static)	Effective operation can be coded by a wire jumper on terminal -X400:9;10 (delivery condition: jumper inserted): jumper inserted: ON/OFF (dynamic)/ jumper removed: ON/OFF (static)
11	DI	OFF (dynamic)	
12	DI	Faster	Motorized potentiometer
13	DI	Slower	Motorized potentiometer
14	DI	RESET	Acknowledge error
15	DI	Interlock	OFF2
16	DI	Counterclockwise	"0" signal: CW phase sequence "1" signal: CCW phase sequence
17	DI	Power Disconnection	EMERGENCY OFF circuit "0" signal: Power disconnection "1" signal: No power disconnection
18			
30	DO (COM)	Ready for operation	Relay output (NO contact)
31	DO (NO)		
32	DO (COM)	Motor turning	Relay output (NO contact)
33	DO (NO)		
34	DO (NO)	Fault	Relay output (two-way contact)
35	DO (COM)		
36	DO (NC)		
50/51	AI 0/4-20 mA	Speed setpoint	Default: 4 ... 20 mA
60/61	AO 0/4-20 mA	Motor frequency	Default: 4 ... 20 mA (preallocated with motor frequency, can be reparameterized for other variables)
62/63	AO 0/4-20 mA	Motor current	Default: 4 ... 20 mA (preallocated with motor current, can be reparameterized for other variables)
Max. connectable cross-section: 2.5 mm²			

Table 4- 87 Terminal block -X3 – connection for the motor PTC thermistor sensor

Terminal	Designation	Default	Comment
90/91	AI	Connection for a PTC thermistor	Shutdown if limit value is exceeded.
Max. connectable cross-section: 2.5 mm²			

Adapting the analog inputs and outputs

If the setting ranges of the analog inputs and outputs are to be changed, the associated interface converters (-T401 / -T402 / -T403) must be set. The corresponding interface converter must be removed for this purpose and the rotary switch on the side ("S1") turned to the corresponding position.

Table 4- 88 Terminal block -X2 – Adaptation of analog inputs and outputs

Terminal	Designation	Item code of interface converter	Settings on rotary switch S1
50/51	AI	T401	2: 0 ... 20 mA 4: 4 ... 20 mA (default)
60/61	AO	T402	1: 0 ... 20 mA 2: 4 ... 20 mA (default)
62/63	AO	T403	1: 0 ... 20 mA 2: 4 ... 20 mA (default)

4.9.36 Separate 24 V DC power supply for NAMUR (option B02)

Description

If the customer cannot provide a separate 24 V DC supply (PELV), this option enables a second power supply to be installed to provide the PELV (terminal assignment as option B00, 24 V infeed at terminal -X1:1,2,3 no longer needed).

4.9.37 Outgoing section for external auxiliary equipment for NAMUR (option B03)

Description

If power is to be supplied to a motor fan on site, option B03 provides an uncontrolled fuse-protected (10 A) outgoing section. As soon as the supply voltage is present at the converter input, it is also present at these terminals. The voltage corresponds to the converter input voltage. You must take this into account when configuring the separately driven fan.

Connecting

Table 4- 89 Terminal block -X1 – uncontrolled power outlet (10 A) for supplying a separately driven motor fan

Terminal	Default	Comment
1, 2, 3, PE	Outgoing section for separately driven motor fan	$U = U_{line}$
Max. connectable cross-section: 2.5 mm²		

Commissioning

5

5.1 Chapter content

This section provides information on the following:

- An overview of the operator panel functions
- Initial commissioning of the cabinet unit (initialization) with STARTER and AOP30
  - Entering the motor data (drive commissioning)
  - Entering the most important parameters (basic commissioning), concluding with motor identification
- Data backup
- Parameter reset to factory settings

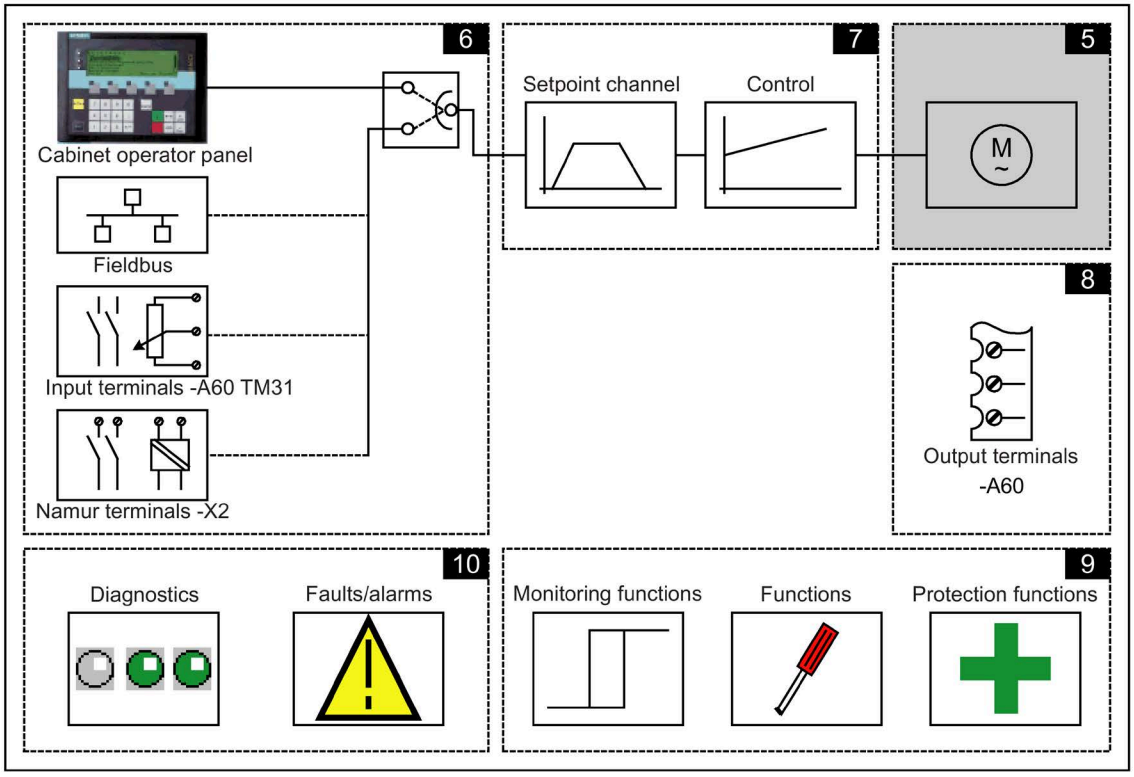

Important information prior to commissioning

The cabinet unit offers a varying number of internal signal interconnections depending on the delivery condition and the options installed. For the converter control to be able to process the signals correctly, several software settings must be made.

During initial power-up of the Control Unit and during first commissioning, parameter macros are executed and the necessary settings made.
The settings are documented in the Appendix.

After initial power-up, first commissioning, and also following a "Parameter reset to factory settings", individual parameter values deviate from the factory settings stated in the List Manual.

⚠ WARNING

Malfunctions of the machine as a result of incorrect or changed parameter settings

As a result of incorrect or changed parameterization, machines can malfunction, which in turn can lead to injuries or death.

- Protect the parameterization (parameter assignments) against unauthorized access.
- Respond to possible malfunctions by applying suitable measures (e.g. EMERGENCY STOP or EMERGENCY OFF).

5.2 STARTER commissioning tool

Description

You can use the STARTER commissioning tool to configure and commission SINAMICS drives and drive systems. The drive can be configured using the STARTER drive configuration wizard.

Note

STARTER online help

This section shows you how to carry out commissioning using STARTER. STARTER features a comprehensive online help function, which provides detailed explanations of all the processes and available system settings.
For this reason, this section only describes the individual commissioning steps.

Prerequisite: STARTER Version

The following STARTER version is required to commission the SINAMICS with firmware V5.2:

- STARTER V5.4 HF1

Prerequisites for installing STARTER

Hardware
The following minimum requirements must be complied with:

- PG or PC with Pentium III min. 1 GHz (recommended > 1 GHz)
- 2 GB work memory (4 GB recommended)
- Screen resolution 1024×768 pixels, 16-bit color depth
- Free hard disk space > 5 GB

Software
The following minimum prerequisites must be observed when using STARTER without an existing STEP 7 installation:

64-bit operating systems:

- Microsoft Windows 7 Professional SP1
- Microsoft Windows 7 Ultimate SP1
- Microsoft Windows 7 Enterprise SP1 (standard installation)
- Microsoft Windows 10 Professional, from version 1709
- Microsoft Windows 10 Enterprise, from Version 1709
- Microsoft Windows 10 Enterprise 2016 LTSB (OS build 14393)
- Microsoft Windows Server 2016
- Microsoft Windows Server 2019

STARTER setup is possible with native Windows versions with Asian languages only if the Windows 7 software is an MUI version.

Acrobat Reader V9.4 or higher is required to open the function diagrams in the online help.

Note

Requirements in conjunction with STEP7

If STARTER is used in combination with other STEP7 components, the prerequisites for the S7 components shall apply.

5.2.1 Installing the STARTER commissioning tool

STARTER is installed using the "setup" file on the customer DVD supplied. When you double-click the "Setup" file, the installation Wizard guides you through the process of installing STARTER.

Note

Installation time

The installation time depends on the computer performance and from where the software is installed (e.g. DVD, hard disk, network). We recommend that you install the software from a local data carrier.

5.2.2 Layout of the STARTER user interface

STARTER features four operating areas:

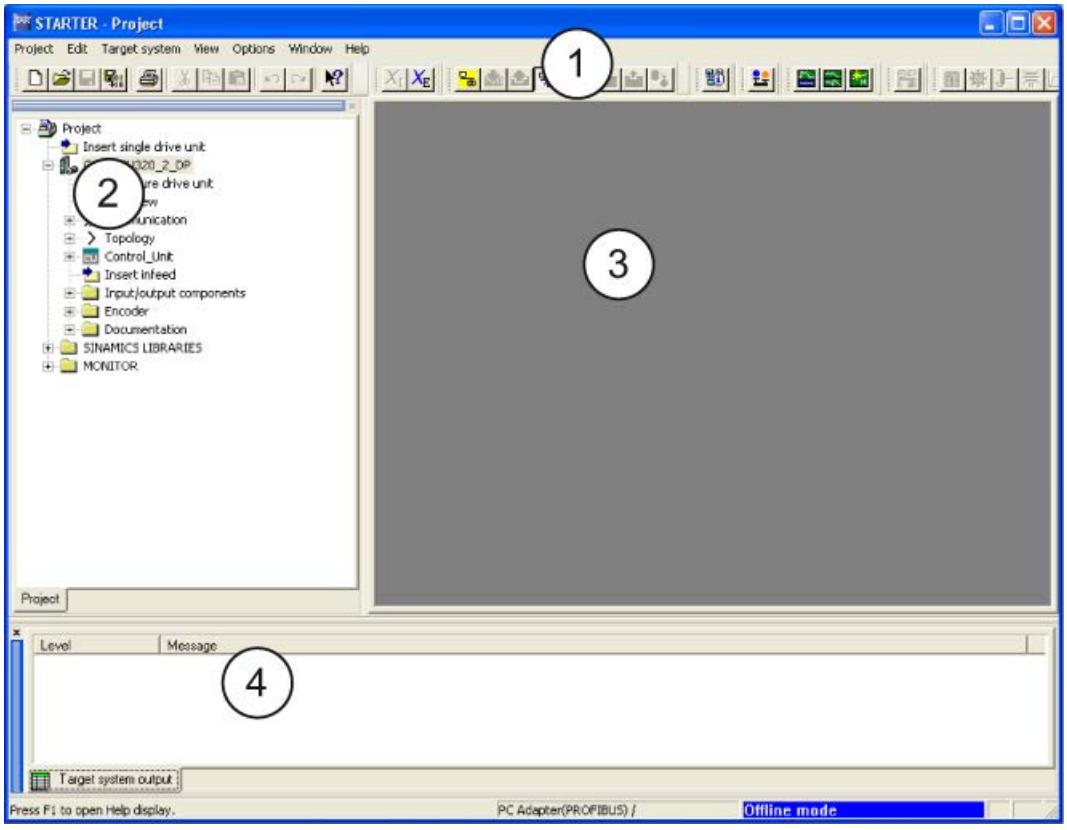

Figure 5-1 STARTER operating areas

Operating area	Explanation
1: Toolbars	In this area, you can access frequently used functions via the icons.
2: Project navigator	The elements and projects available in the project are displayed here.
3: Working area	In this area, you can change the settings for the drive units.
4: Detail view	Detailed information about faults and alarms, for example, is displayed this area.

5.3 Procedure for commissioning via STARTER

Basic procedure using STARTER

STARTER uses a sequence of dialog screens for entering the required drive unit data.

Note

Default settings in dialog screens

These dialog screens contain default settings, which you may have to change according to your application and configuration.

This is intentional!
Objective: By taking time to consider what configuration data you enter, you can prevent inconsistencies between the project data and drive unit data (identifiable in online mode).

5.3.1 Creating a project

Click the STARTER icon on the desktop or select menu command Start > STARTER > STARTER in the Windows start menu to start the STARTER commissioning tool.

The first time you run the software, the main screen shown below appears with the dialog screen forms:

- STARTER Getting Started
- STARTER project wizard

The commissioning steps are listed below as a numbered step sequence.

Accessing the STARTER project wizard

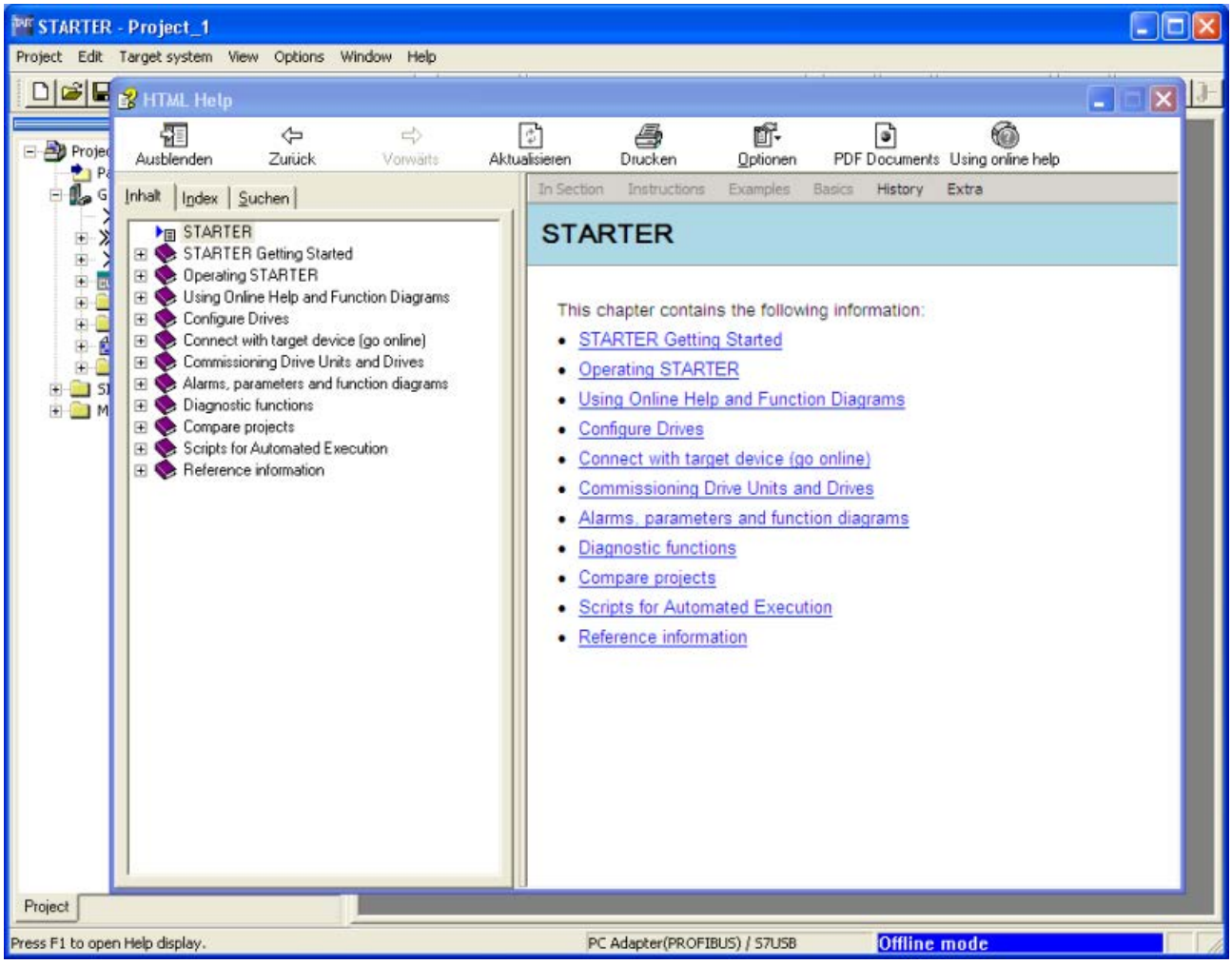

Figure 5-2 Main screen of the STARTER parameterization and commissioning tool

⇒ Hide STARTER Getting Started commissioning drive using **HTML Help > Close**
The online help can be permanently hidden by deselecting **Options > Settings > Workbench > Display "Getting Started" when starting**

Note

Project wizard

When you deactivate the **Display wizard during start** checkbox, the project wizard is no longer displayed the next time you start STARTER.

You can call up the project wizard by choosing **Project > New with Wizard**.

The online help can be opened again at any time using **Tools > Settings > Workbench > Display "Getting Started" when starting**

STARTER features a detailed online help function.

The STARTER project wizard

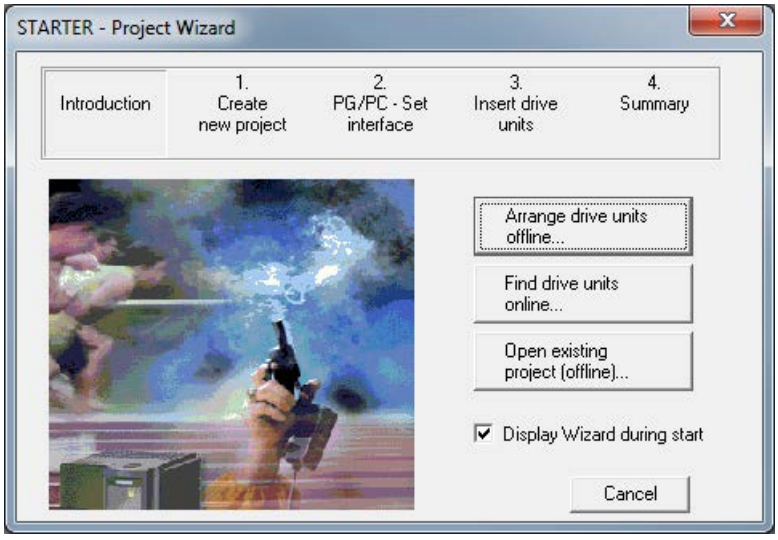

Figure 5-3 STARTER project wizard

⇒ click **Arrange drive units offline...** in the STARTER project wizard.

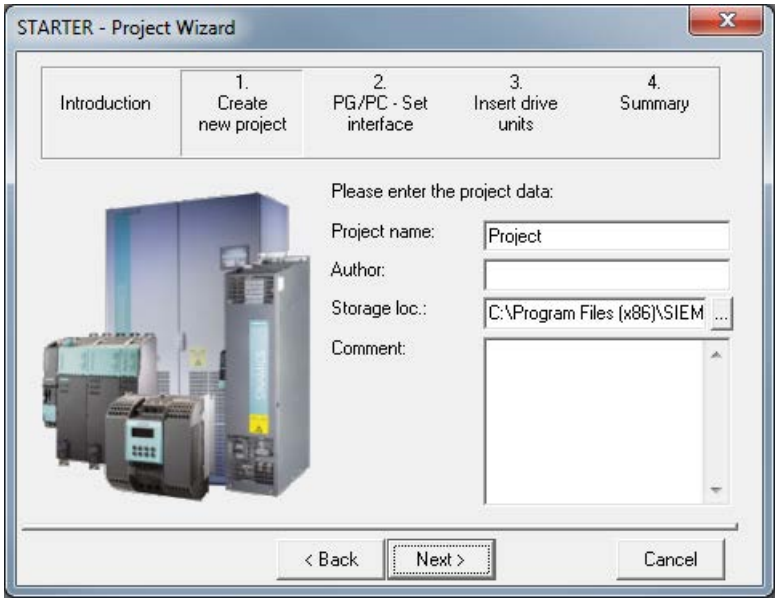

Figure 5-4 Create new project

⇒ Enter a **project name** and, if necessary, the **author, memory location** and a **comment**.

⇒ Click **Continue >** to set up the PG/PC interface.

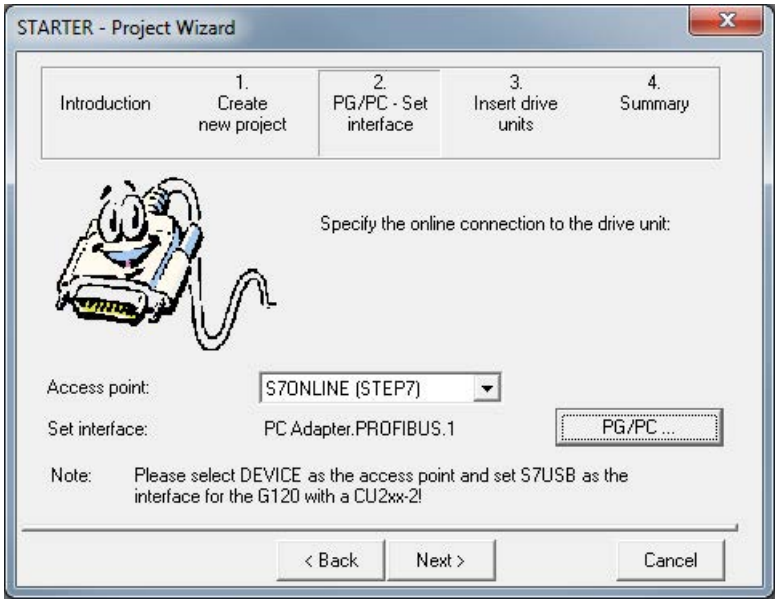

Figure 5-5 Set up interface

⇒ Under **Access point:** select the interface corresponding to your device configuration from:

- Select the S7ONLINE access (STEP7), if the connection to the drive unit is established via PROFINET or PROFIBUS.
- Select the DEVICE access, if the connection to the drive unit is established via the Ethernet interface.

⇒ Click **PG/PC ...** and set up the interface in accordance with your device configuration.
The **Properties...**, **Copy...** and **Select...** pushbuttons are now active.

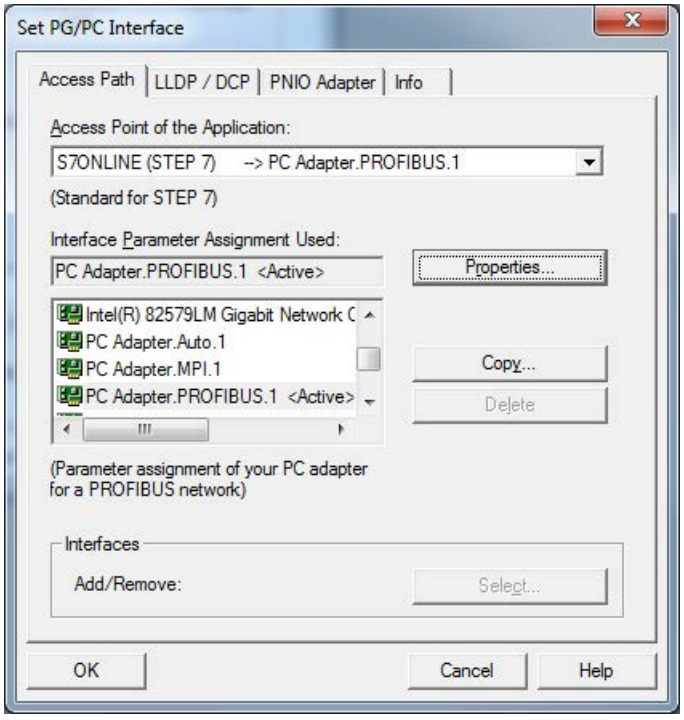

Figure 5-6 Setting the interface

Note

Precondition

To parameterize the interface, you must install the appropriate interface card (e.g., PC Adapter (PROFIBUS)

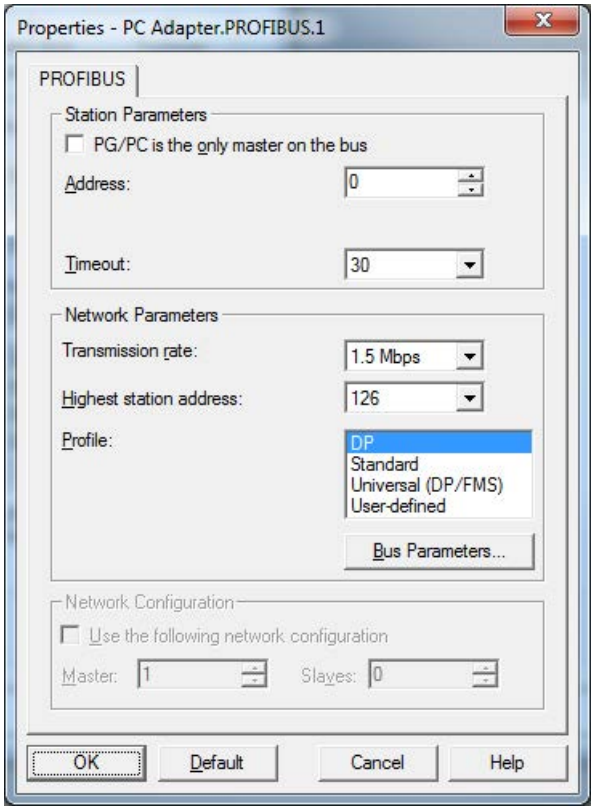

Figure 5-7 Setting the interface - properties

Note

Activate PG/PC is the only master on the bus

You must activate **PG/PC is the only master on bus** if no other master (PC, S7, etc.) is available on the bus.

Note

Configure even without an interface

Projects can be created and PROFIBUS addresses for the drive objects assigned even if a PROFIBUS interface has not been installed on the PC.

To prevent bus addresses from being assigned more than once, only the bus addresses available in the project are proposed.

When required, a manual address entry can also be used to enter an already assigned address.

⇒ After completion, click **OK** to confirm the settings and to return to the project wizard.

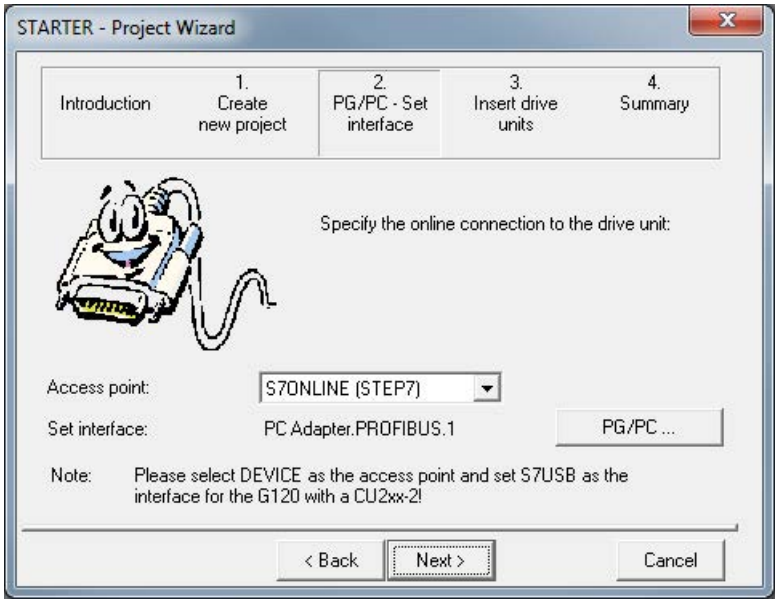

Figure 5-8 Complete setting the interface

⇒ Click **Continue >** to set up a drive unit in the project wizard.

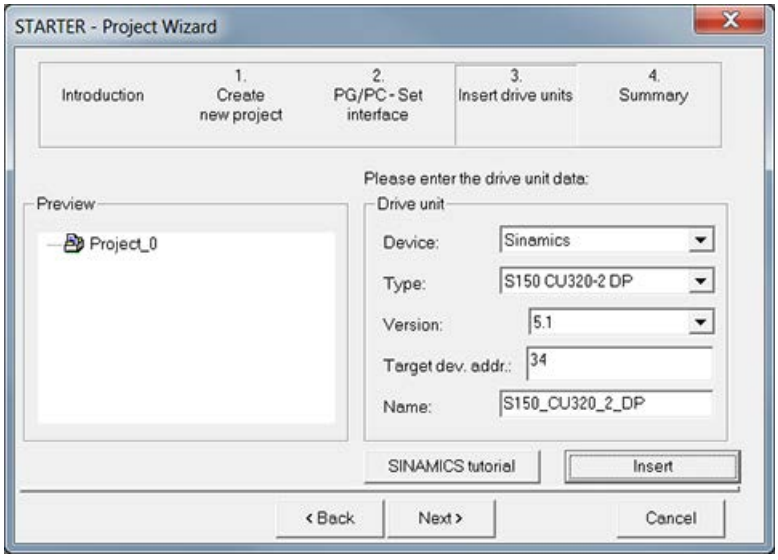

Figure 5-9 Inserting the drive unit

⇒ Choose the following data from the list fields:
Device: Sinamics
Type: S150 CU320-2 DP or S150 CU320-2 PN for option K95
Version: 5.2
Address of the target device: the corresponding bus address for the cabinet unit
The entry in **Name:** can be freely selected.

⇒ Click **Insert**
The selected drive unit is displayed in a preview window in the project wizard.

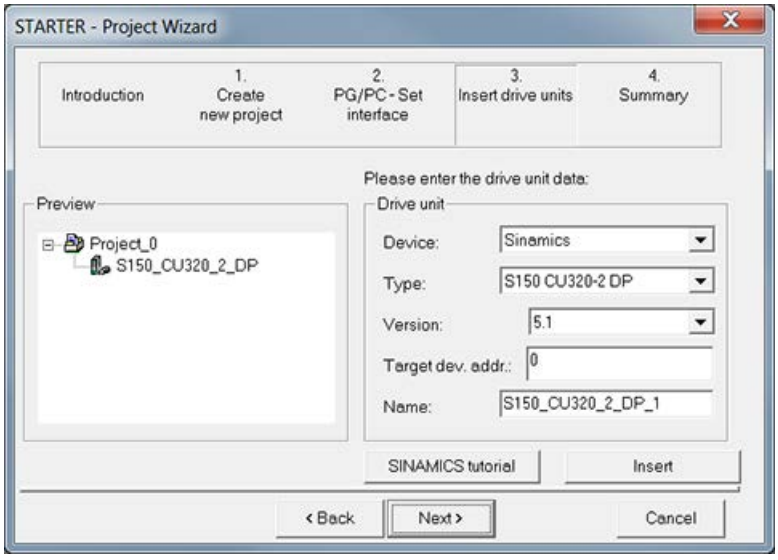

Figure 5-10 Drive unit inserted

⇒ Click **Continue >**
A project summary is displayed.

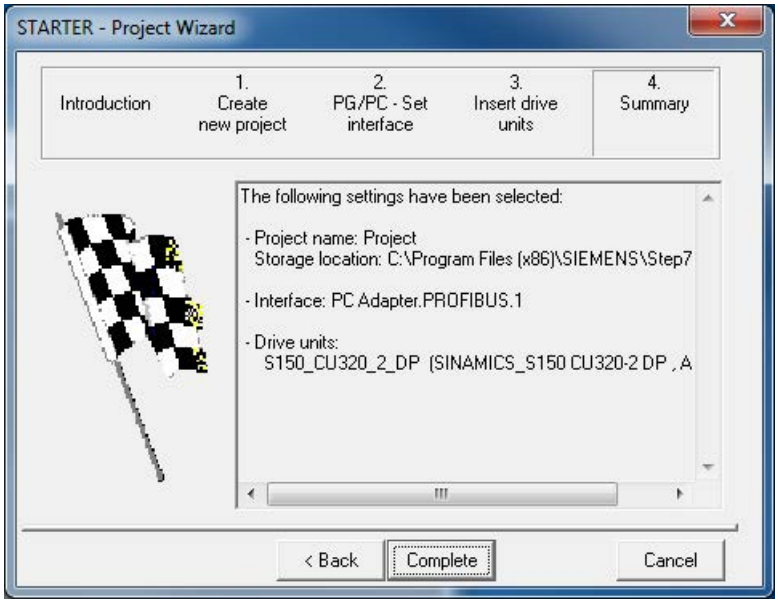

Figure 5-11 Summary

⇒ Click **Complete** to finish creating a new drive unit project.

5.3.2 Configuring the drive unit

In the project navigator, open the component that contains your drive unit.

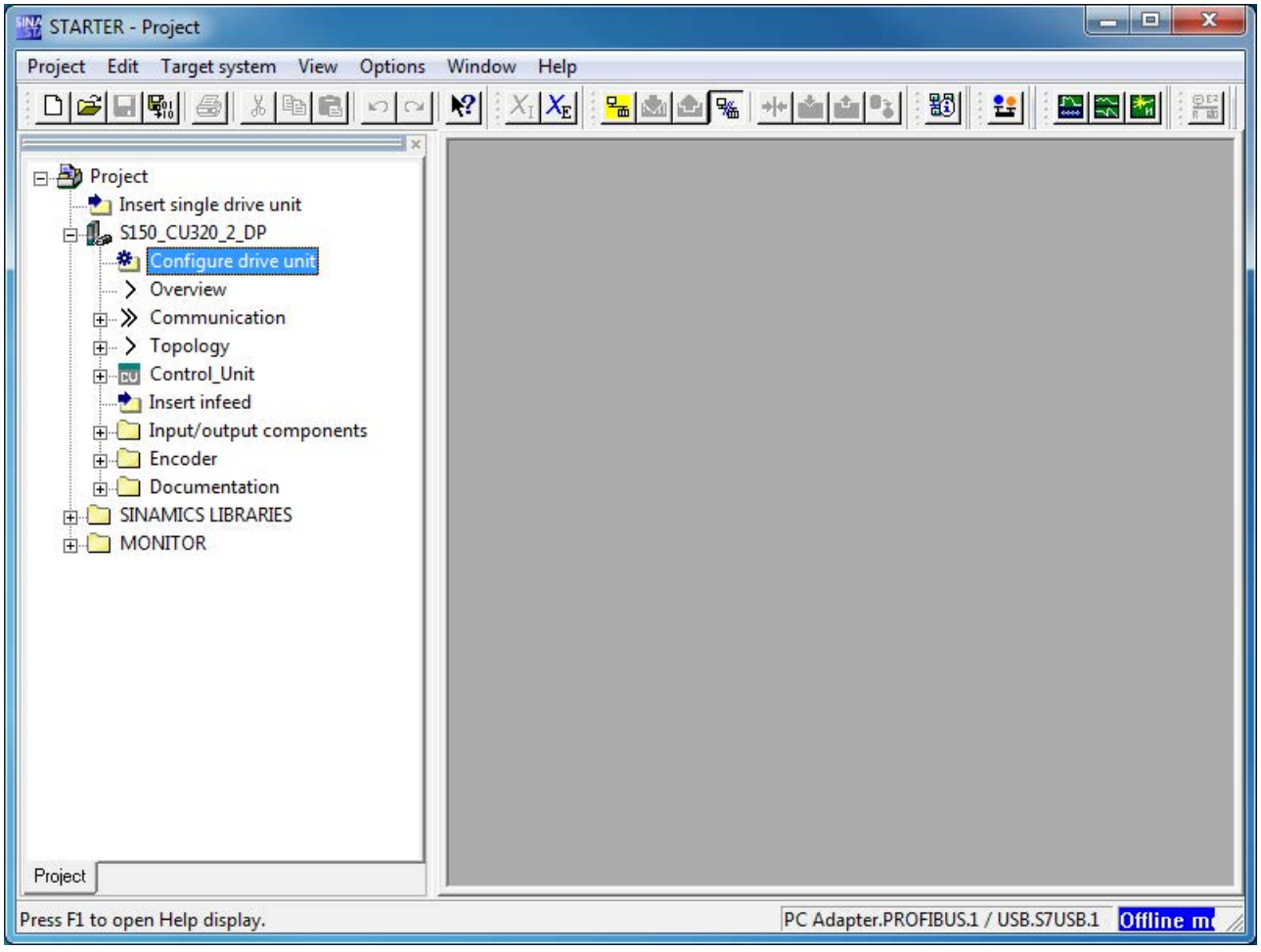

Figure 5-12 Project navigator – configuring the drive unit

⇒ In the project navigator, click the plus sign next to the drive unit that you want to configure. The plus sign becomes a minus sign and the drive unit configuration options are displayed as a tree below the drive unit.

⇒ Double-click **Configure the drive unit**.

Configuring the drive unit

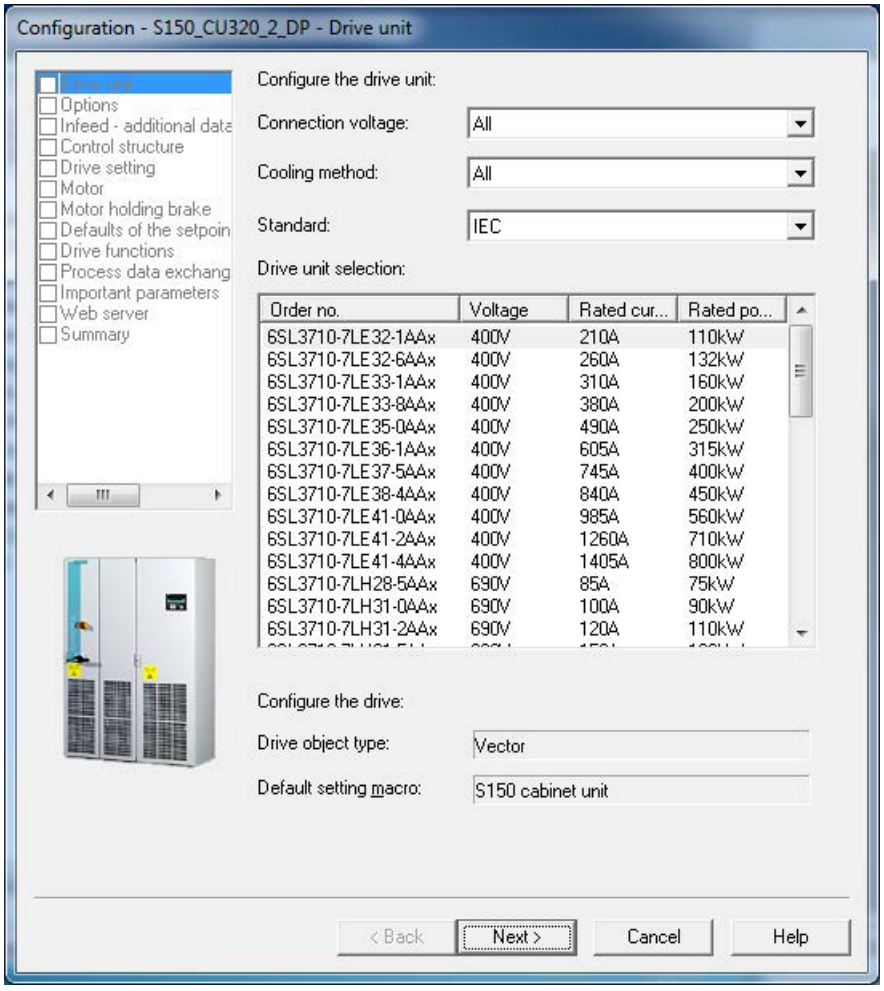

Figure 5-13 Configuring the drive unit

⇒ Under **Connection voltage**, choose the correct voltage. Under **Cooling type:** choose the correct cooling type for your drive unit.

⇒ Under **Standard:**, choose "IEC" to restrict the selection of drive units offered.

Note

Make a pre-selection

In this step, you make a preliminary selection of the cabinet units. You do not define the line voltage yet.

⇒ A list is now displayed under **Drive unit selection:**. Choose the corresponding drive unit according to type (article no.) (see rating plate).

⇒ Click **Continue >**

Selecting options

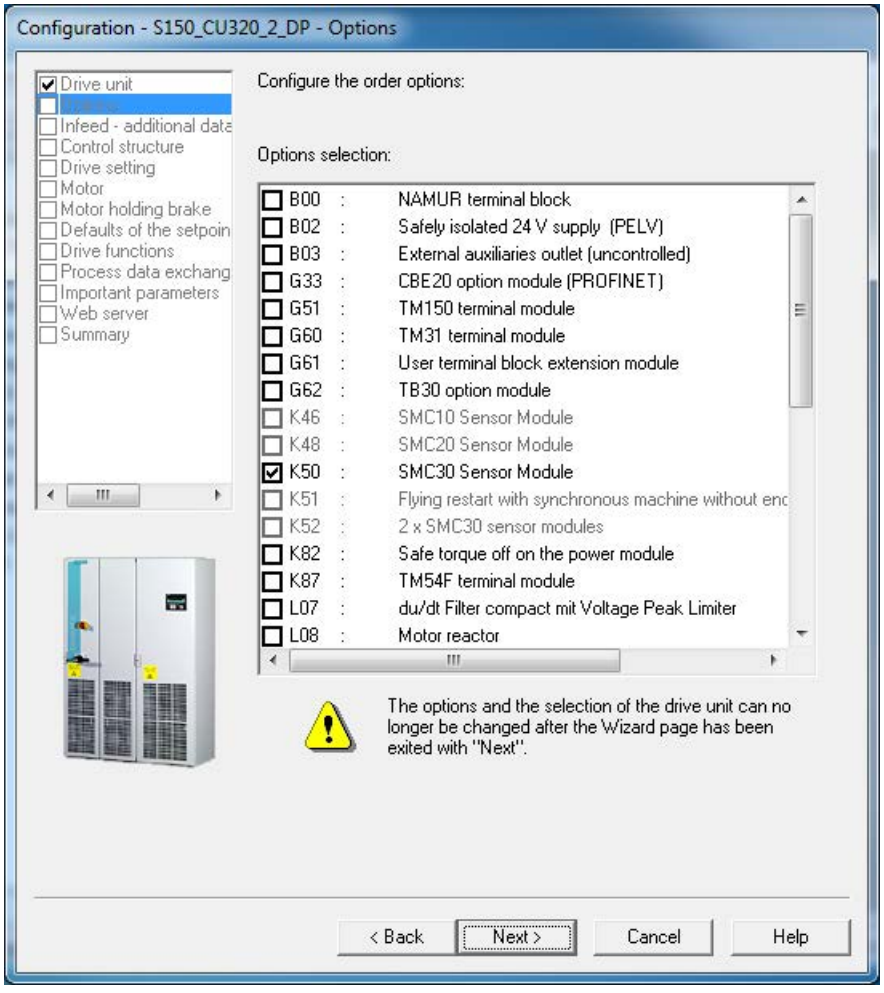

Figure 5-14 Selecting options

⇒ From the combination box **Options selection:** select the options belonging to your drive unit by clicking on the corresponding check box (see type plate).

NOTICE
Damage to the sine-wave filter if it is not activated during commissioning The sine-wave filter may be damaged if it is not activated during commissioning. • Activate the sine-wave filter during commissioning by activating the appropriate checkbox (option L15).

NOTICE

Damage to the du/dt filter if it is not activated during commissioning

The du/dt filter may be damaged if it is not activated during commissioning.

- Activate the du/dt filter during commissioning by activating the appropriate checkbox (option L07, L10).

Note

Motor reactor

If a motor reactor (option L08) is being used, the option selection must be activated, otherwise the closed-loop motor control will not be able to operate in an optimum fashion.

Note

Check option selection

Check your options carefully against the options specified on the type plate.

Since the wizard establishes internal interconnections on the basis of the options selected, you cannot change the selected options by clicking **< Back**.
If you make an incorrect entry, delete the entire drive unit from the project navigator and create a new one.

⇒ Check your options carefully and then click **Continue >**

Configuring the infeed

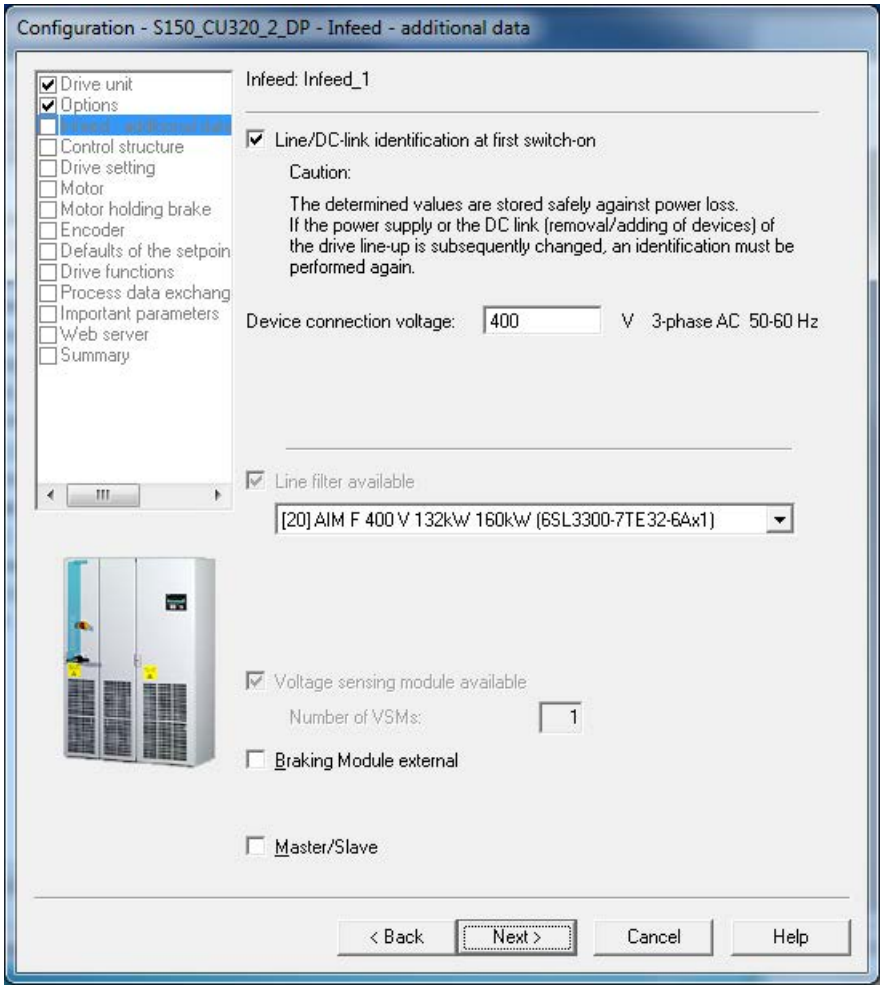

Figure 5-15 Configuring the infeed

⇒ Choose whether the line and DC link identification function is to be activated during initial start-up.
(Recommendation: "Activate identification" = "Yes")

⇒ Specify the **Device connection voltage**.

⇒ Check whether the article number of the selected line filter (Active Interface Module) matches the article number on the type plate of the installed Active Interface Module. Select the correct article number of the installed Active Interface Module if applicable.

The type of temperature evaluation (p3665, KTY, or PT1000) of the installed filter reactor is set by selecting the Active Interface Module. Only suitable Active Interface Modules are offered in the selection screen in the STARTER.

NOTICE
Erroneous temperature evaluation due to incorrectly selected article numbers of the installed Active Interface Module Since 2016, a PT1000 temperature sensor has been used for recording the temperature of the line reactor of the Active Interface Module. An incorrectly selected line filter (Active Interface Module) leads to an erroneous default setting of the temperature sensor and thus to an erroneous temperature evaluation of the installed filter reactor. It can also lead to fault messages or warning messages. • Select the correct article number of the selected line filter (Active Interface Module).

⇒ Click **Continue >**

Selecting the control structure

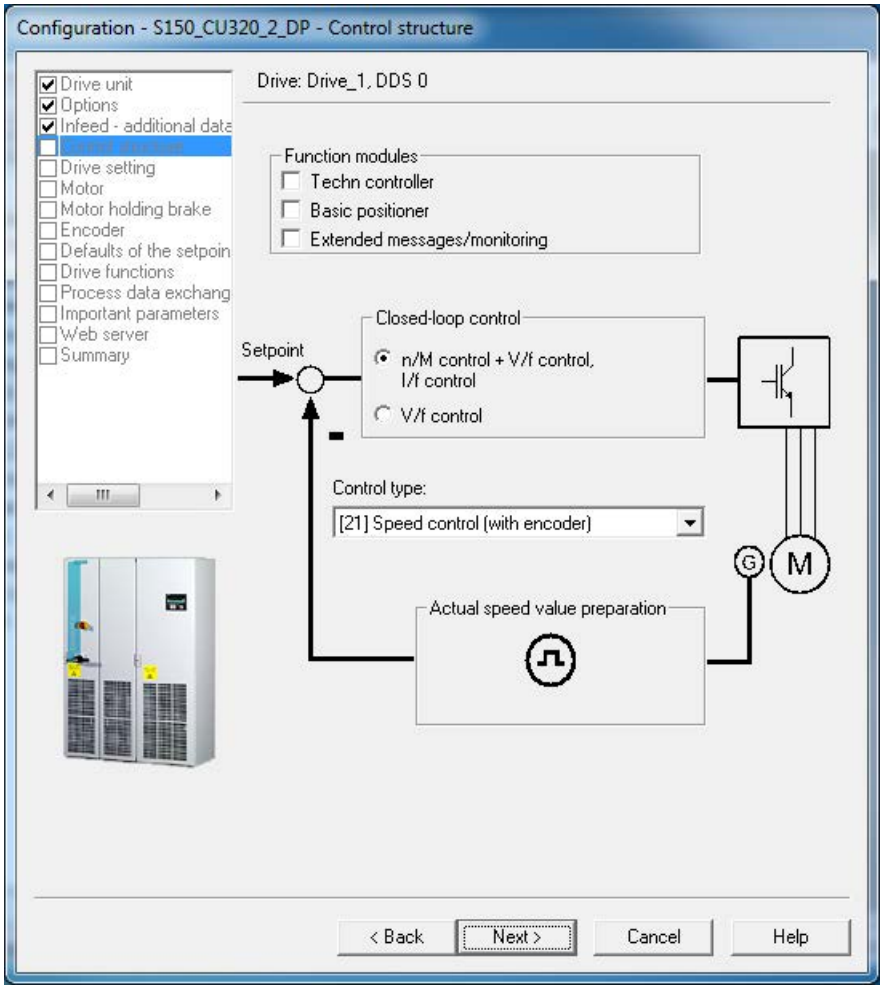

Figure 5-16 Selecting the control structure

⇒ Select the corresponding settings for the closed-loop control structure:

- **Function modules:**
  - Technology controller
  - Basic positioner
  - Extended messages/monitoring
- **Control:**
  - n/M control + U/f control, I/f control
  - U/f control
- **Control mode:**
  Depending on the selected control, you can select from one of the following open-loop/closed-loop control modes:
  - 0: U/f control with linear characteristic
  - 1: U/f control with linear characteristic and FCC
  - 2: U/f control with parabolic characteristic
  - 3: U/f control with parameterizable characteristic
  - 4: U/f control with linear characteristic and ECO
  - 5: U/f control for drive requiring a precise frequency (e.g. textiles)
  - 6: U/f control for drive requiring a precise frequency and FCC
  - 7: U/f control with parabolic characteristic and ECO
  - 15: Operation with braking resistor
  - 18: I/f control with fixed current
  - 19: U/f control with independent voltage setpoint
  - 20: Speed control (without encoder)
  - 21: Speed control (with encoder)
  - 22: Torque control (without encoder)
  - 23: Torque control (with encoder)

⇒ Click **Continue >**

Configuring the drive unit properties

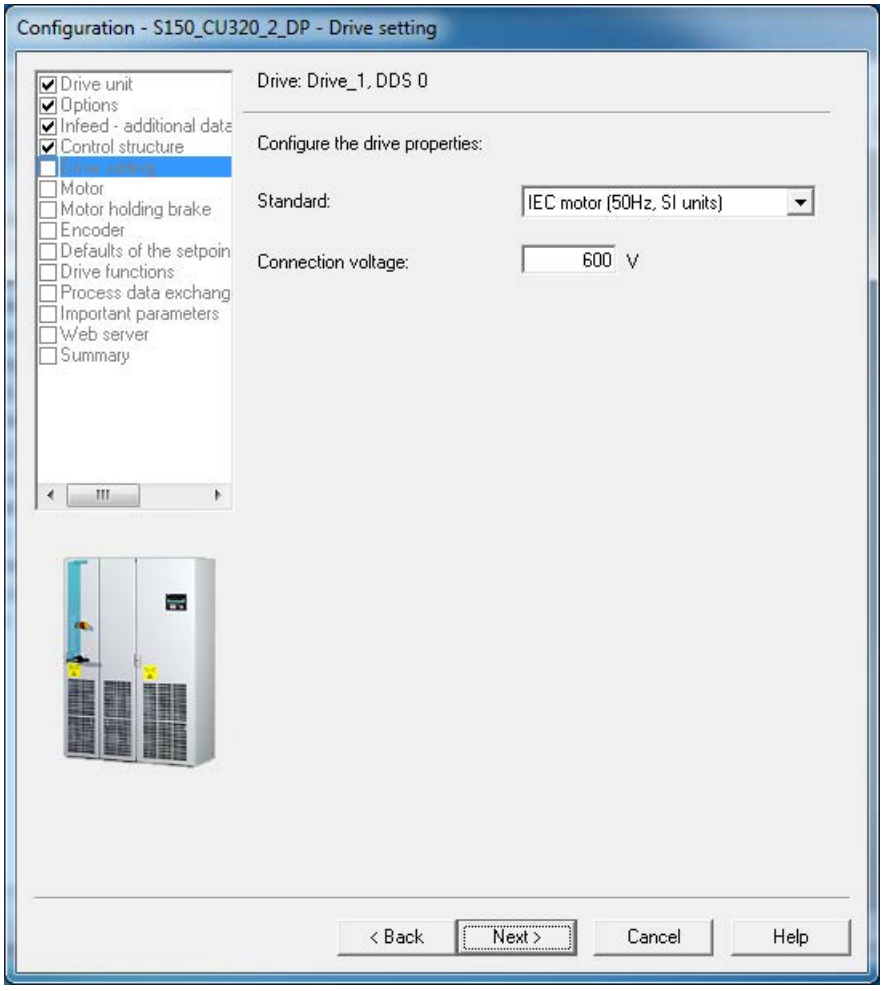

Figure 5-17 Configuring the drive unit properties

⇒ Under **Standard:**, choose the appropriate standard for your motor, whereby the following is defined:

- IEC motor (50 Hz, SI unit): Line frequency 50 Hz, motor data in kW
- NEMA motor (60 Hz, US unit): Line frequency 60 Hz, motor data in hp

⇒ Under **Supply voltage:** the DC link voltage of the cabinet unit is specified (this should not be changed).

⇒ Click **Continue >**

The connected motor can be selected and/or entered in different ways:

- by selecting a standard motor from a list
- by entering the motor data.

Selecting a standard motor type from a list

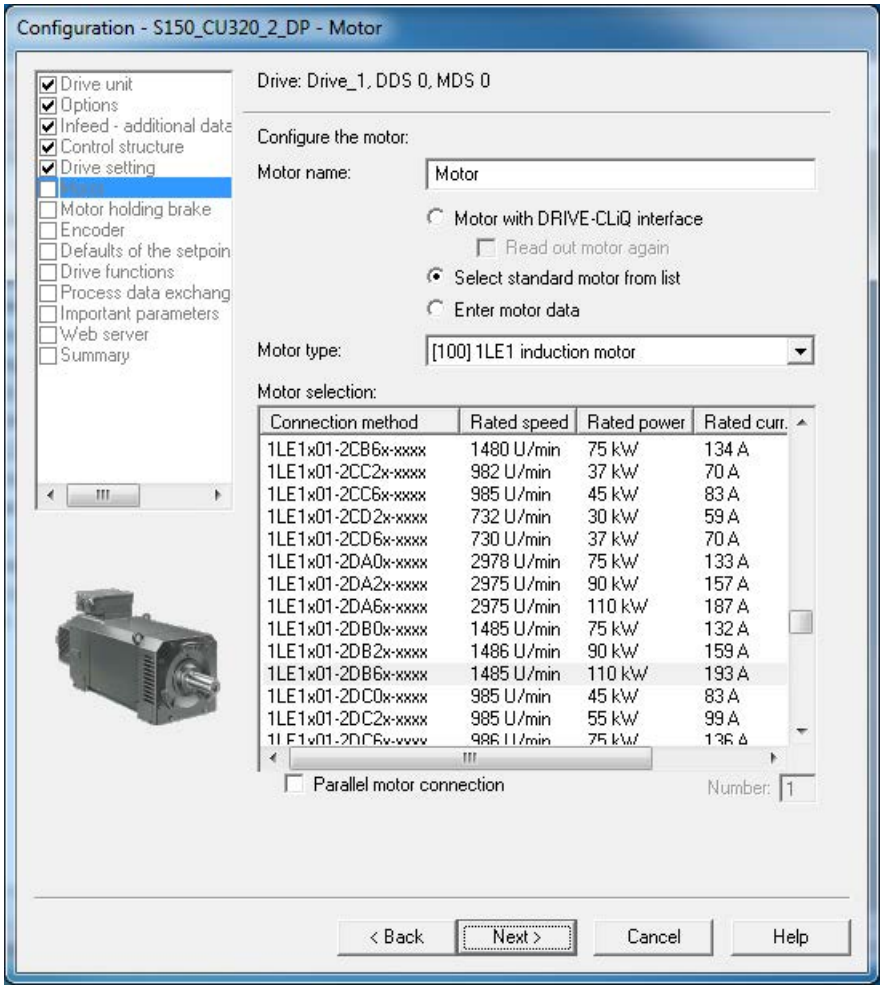

Figure 5-18 Configuring a motor – selecting the motor type, selecting a standard motor from a list

⇒ Under **Motor name:** enter a name for the motor.

⇒ Select **a standard motor from the list**

⇒ From the selection box next to **Motor type:**, select the corresponding motor type

⇒ From the list **Select motor:**, select the corresponding motor

⇒ Under **Parallel connection motor**, enter the number of motors connected in parallel when required.
Motors connected in parallel must be of the same type and rating.

⇒ Click **Continue >**

Configuring the motor – Selecting the type of connection

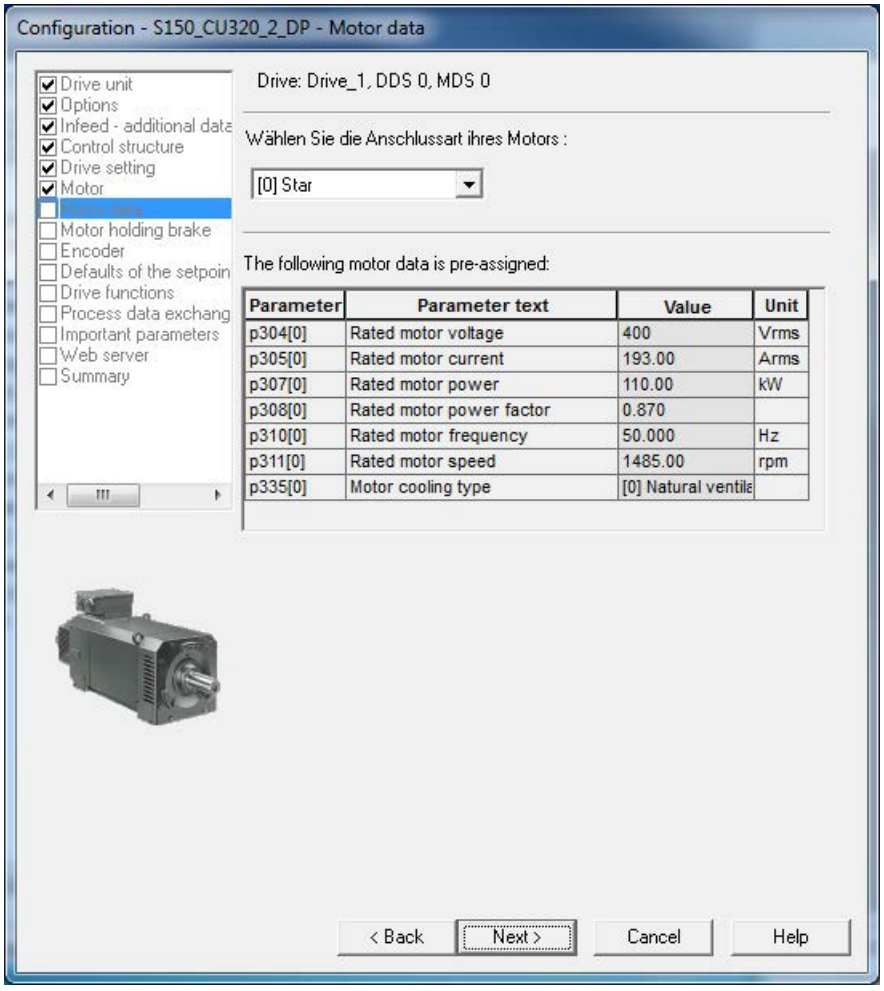

Figure 5-19 Configuring the motor – Selecting the type of connection

⇒Under **Connection type:**, select whether the motor is connected in a star or delta connection.
The values for the rated motor voltage (p0304) and rated motor current (p0305) are automatically converted according on the selected connection type.

⇒ Click on **Continue >** to configure the motor holding brake

Selecting the motor type by entering the motor data

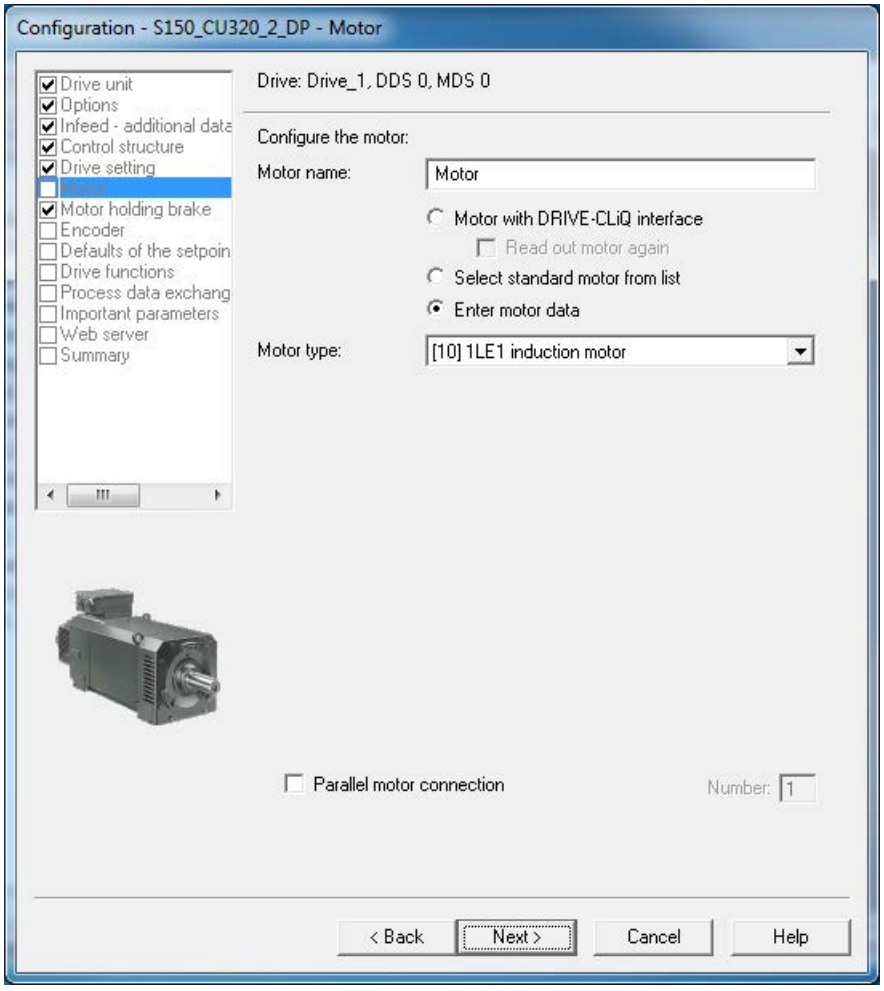

Figure 5-20 Configuring the motor – selecting the motor type, entering the motor data

⇒ Under **Motor name:** enter a name for the motor.

⇒ Select **Enter motor data**

⇒ From the selection box next to **Motor type:**, select the appropriate motor for your application.

⇒ Under **Parallel connection motor**, enter the number of motors connected in parallel when required.
Motors connected in parallel must be of the same type and rating.

Note

Selecting the motor type

The selection of the motor type is used to pre-assign specific motor parameters and to optimize the operating characteristics and behavior. Details are described in the list manual in the p0300 parameter.

Note

Commissioning of an induction motor

The steps described below also apply to commissioning an induction motor.

When commissioning a permanent-magnet synchronous motor, there are a few special conditions that apply, which are detailed in a separate chapter (see "Setpoint channel and closed-loop control / permanent-magnet synchronous motors").

⇒ Click **Continue >**

Configuring the motor – entering motor data

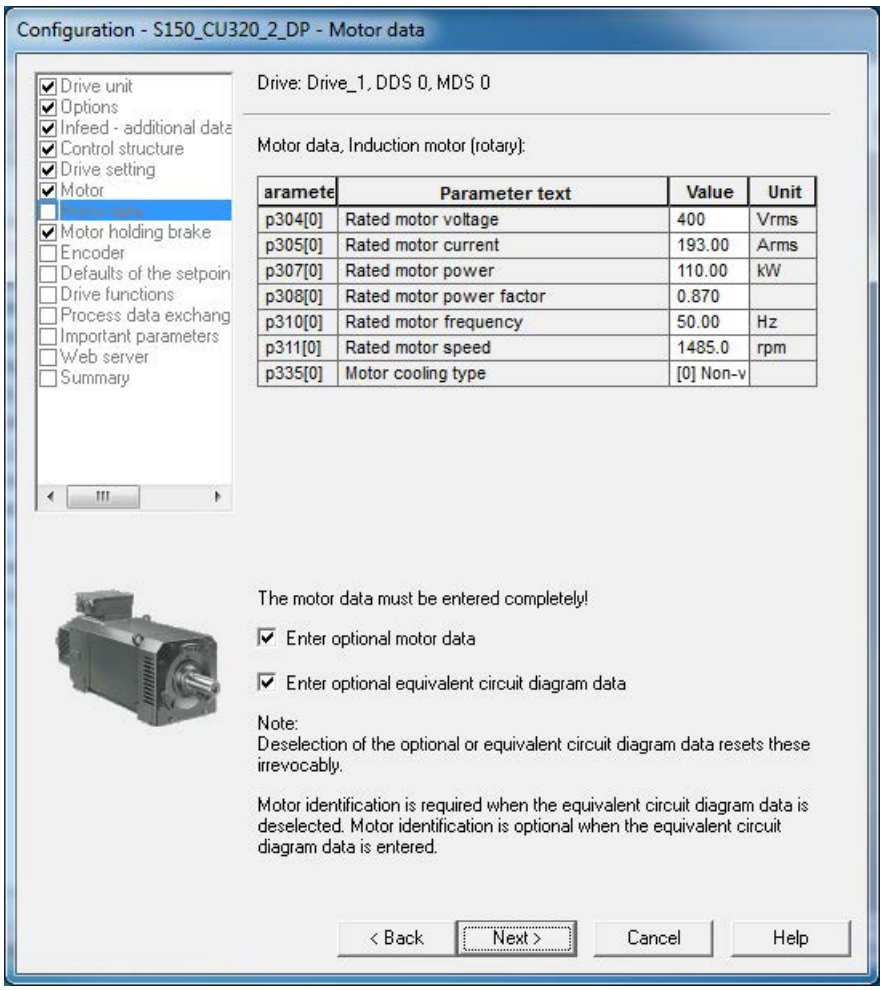

Figure 5-21 Configuring the motor – entering motor data

⇒ Enter the motor data (see motor rating plate).

⇒ Activate **Enter optional motor data** if necessary.

⇒ Activate **Enter optional equivalent circuit diagram data** if necessary.

Note

Entering equivalent circuit diagram data

You should only activate the **Enter optional equivalent circuit diagram data** if the data sheet with equivalent circuit diagram data is available. If any data is missing, an error message will be output when the system attempts to load the drive project to the target system.

⇒ Click **Continue >**

Configuring the motor – Entering optional data

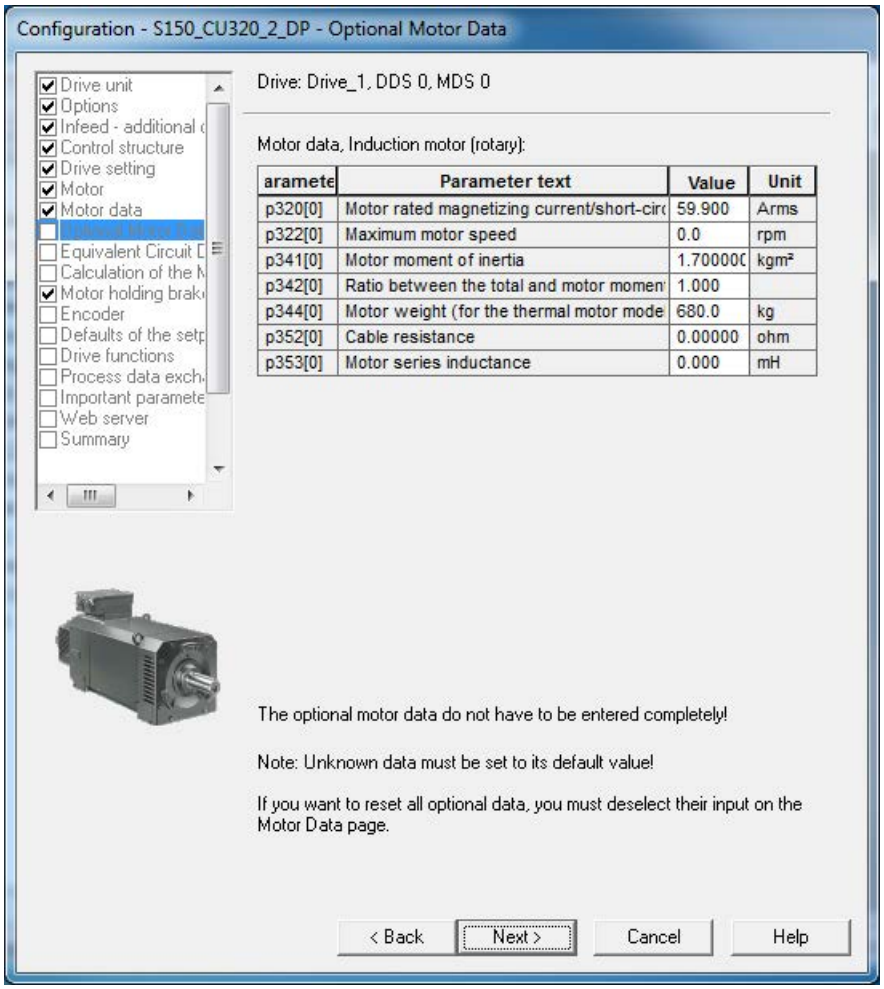

Figure 5-22 Entering optional motor data

⇒ enter the optional motor data.

⇒ Click **Continue >**

Configuring the motor – Entering the equivalent circuit diagram data

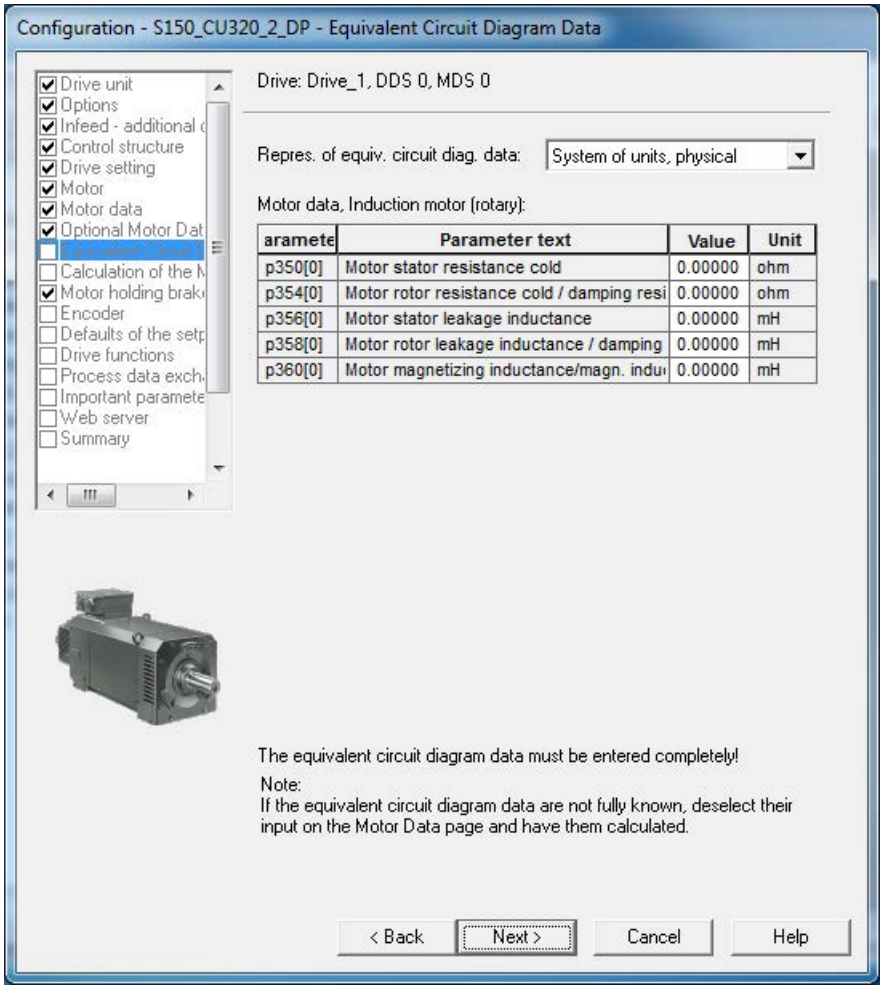

Figure 5-23 Entering equivalent circuit diagram data

⇒ Select one of the equivalent circuit diagram data representations:

- **Physical system of units**
  The equivalent circuit diagram data are shown in the form of physical units.
- **Referred system of units**
  The equivalent circuit diagram data is shown as a % referred to the rated motor data.

⇒ Enter the equivalent circuit diagram data completely.

⇒ Click **Continue >**

Calculating the motor/controller data

Figure 5-24 Calculating the motor/controller data

⇒ in **Calculation of the motor/controller data**, select the appropriate default settings for your device configuration.

Note

Manual input of the equivalent circuit diagram data

If the equivalent circuit diagram data was entered manually (see "Entering the equivalent circuit diagram data"), then the motor/controller data should be calculated **without** calculating the equivalent circuit diagram data.

⇒ Click **Continue >**

Configuring the motor holding brake

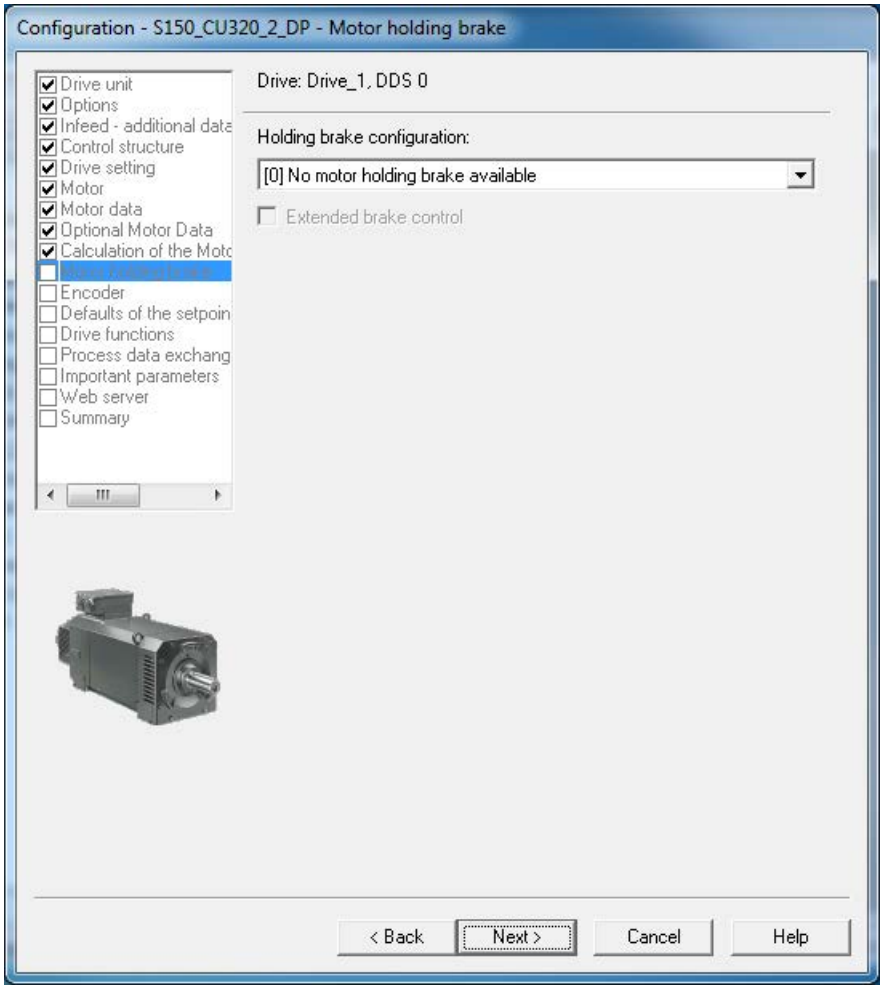

Figure 5-25 Configuring the motor holding brake

⇒ Under **Holding brake configuration:** choose the appropriate setting for your device configuration:

- 0: No motor holding brake being used
- 1: Motor holding brake like sequence control
- 2: Motor holding brake always open
- 3: Motor holding brake like sequence control, connection via BICO

⇒ When a motor holding brake is selected, you can also activate the "Extended brake control" function module.

⇒ Click **Continue >**

Entering the encoder data (option K46 / K48 / K50)

Note

Entering the encoder data

If you have specified option K46, K48, or K50 (SMC10, SMC20, or SMC30 Sensor Module), the appropriate screen is displayed in which you can enter the encoder data.

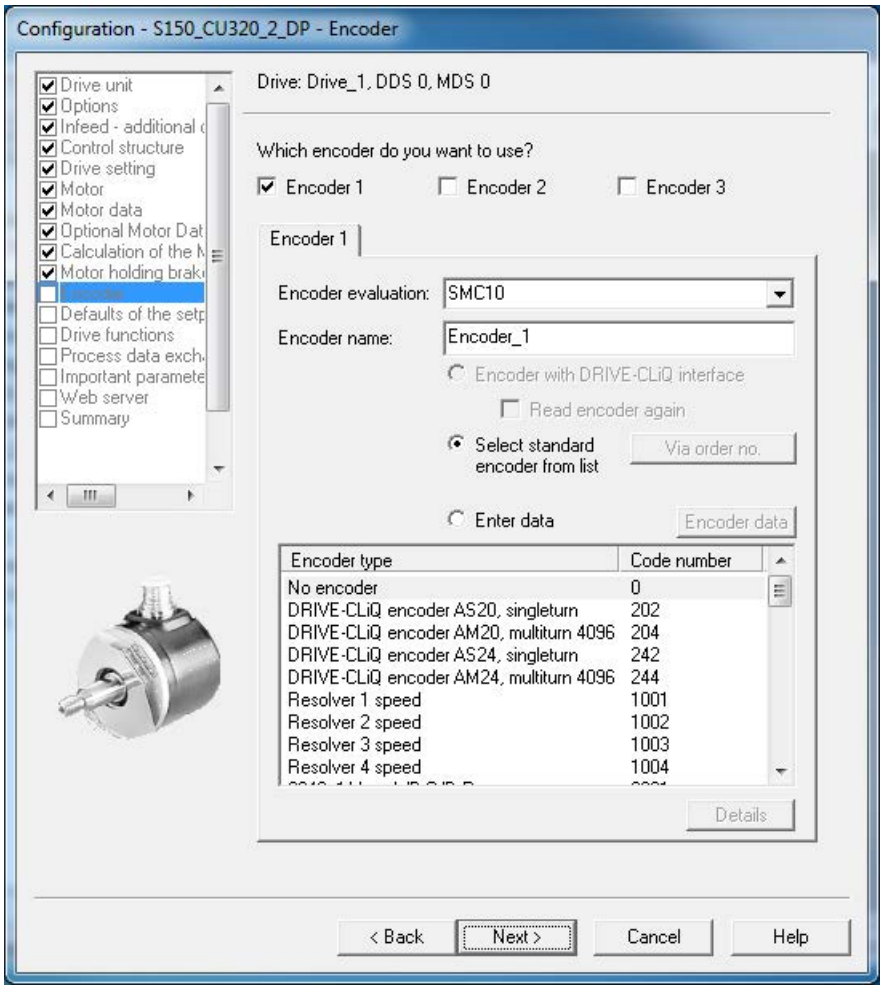

Figure 5-26 Entering the encoder data (option K46)

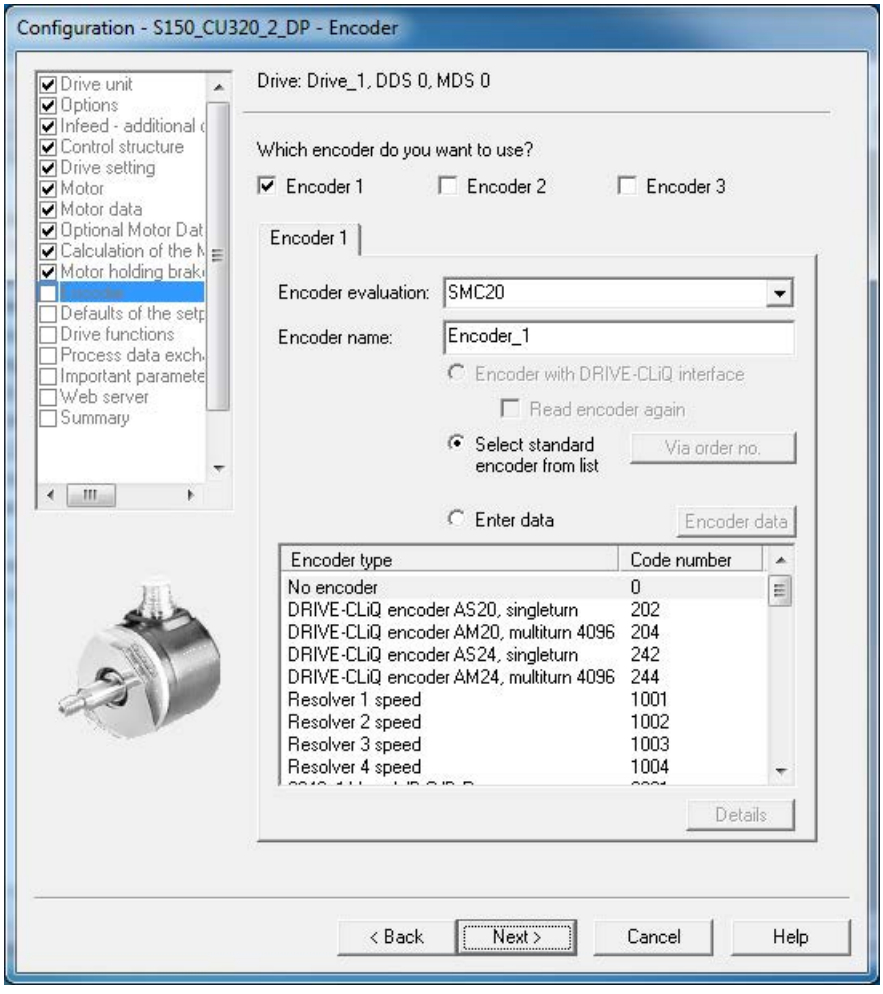

Figure 5-27 Entering the encoder data (option K48)

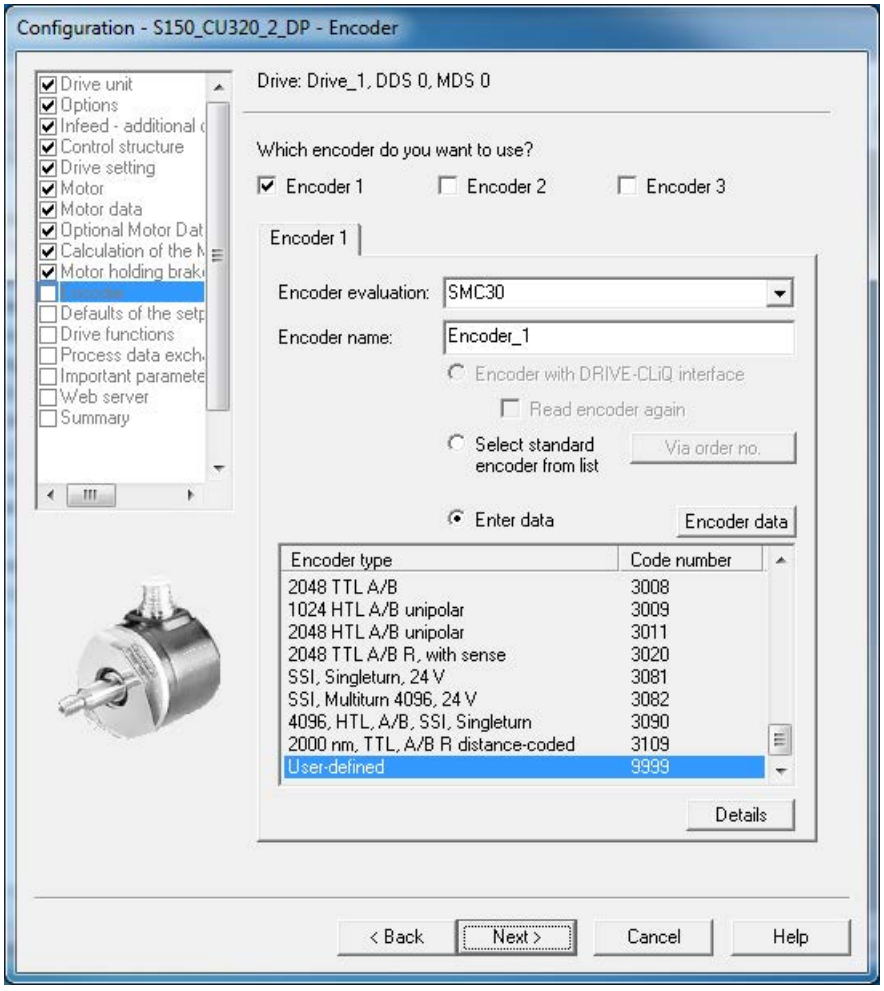

Figure 5-28 Entering the encoder data (option K50)

⇒ In the **Encoder name:** field, enter a name of your choice.

⇒ Click the **Select standard encoder from list** radio button and select one of the available encoders.

- Standard encoders with code numbers 1xxx are provided for selection when encoder module SMC10 is fitted (option K46).
- Standard encoders with code numbers 2xxx are provided for selection when encoder module SMC20 is fitted (option K48).
- Standard encoders with code numbers 3xxx are provided for selection when encoder module SMC30 is fitted (option K50).

⇒ To enter special encoder configurations, click the **Enter data** radio button and then the **Encoder data** button. The following input screen form (in this case an example for the HTL encoder) is displayed in which you can enter the required data.

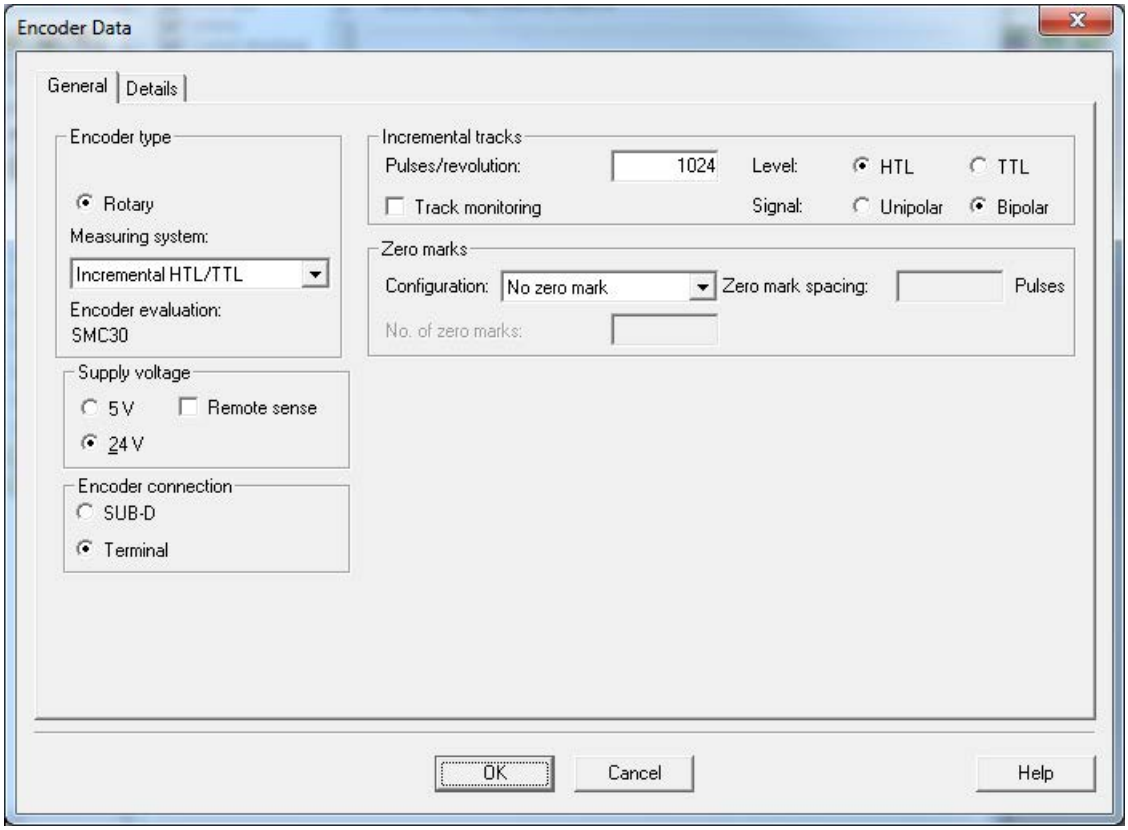

Figure 5-29 Entering encoder data – user-defined encoder data – example: HTL encoder

⇒ Enter the required encoder data.

⇒ under the **Details** tab, special encoder properties can be set, for example, gear ratio, fine resolution, inversion, measuring gear position tracking.

⇒ Click **OK**.

NOTICE
Material damage when selecting the incorrect encoder supply voltage for option K50 For option K50, once the encoder has been commissioned, the supply voltage (5/24 V) set for the encoder is activated on the SMC30 module. If a 5 V encoder is connected and the supply voltage has not been set correctly, the encoder may be damaged. • Set the correct supply voltage for the connected encoder.

Default settings for setpoints/command sources

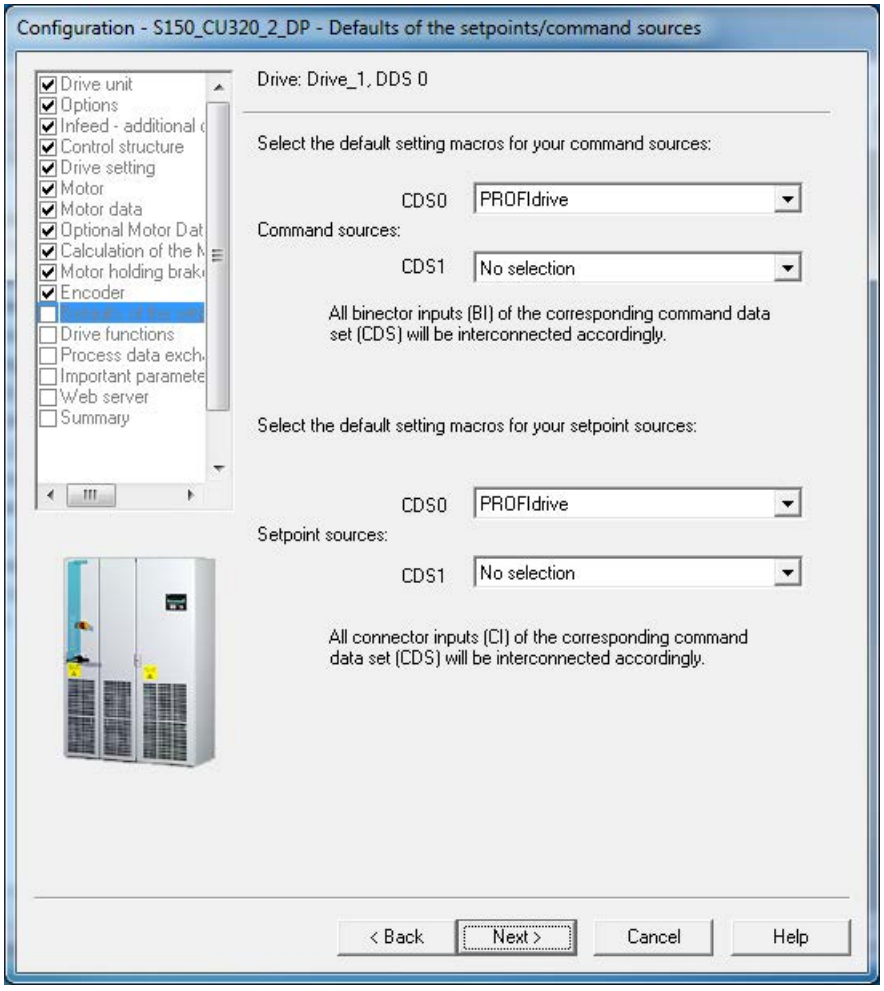

Figure 5-30 Default settings for setpoints/command sources

⇒ Under **Command sources:**, choose and **Setpoint sources:** choose the appropriate settings for your device configuration.

The following command and setpoint source options are available:

Command sources:	PROFIdrive (default)
	TM31 terminals
	NAMUR
	PROFIdrive NAMUR
Setpoint sources:	PROFIdrive (default)
	TM31 terminals
	Motorized potentiometer
	Fixed setpoint

Note

Use of CDS0

With SINAMICS S150, only CDS0 is normally used as a default setting for the command and setpoint sources.

Make sure that the selected default setting is compatible with the actual system configuration.

Note

Do not use a selection

The choice "no selection" is also available as default setting for the command and setpoint sources; if selected, no default settings are applied for the command and setpoint sources.

⇒ Check your default settings carefully and then click **Continue >**

Selecting drive functions

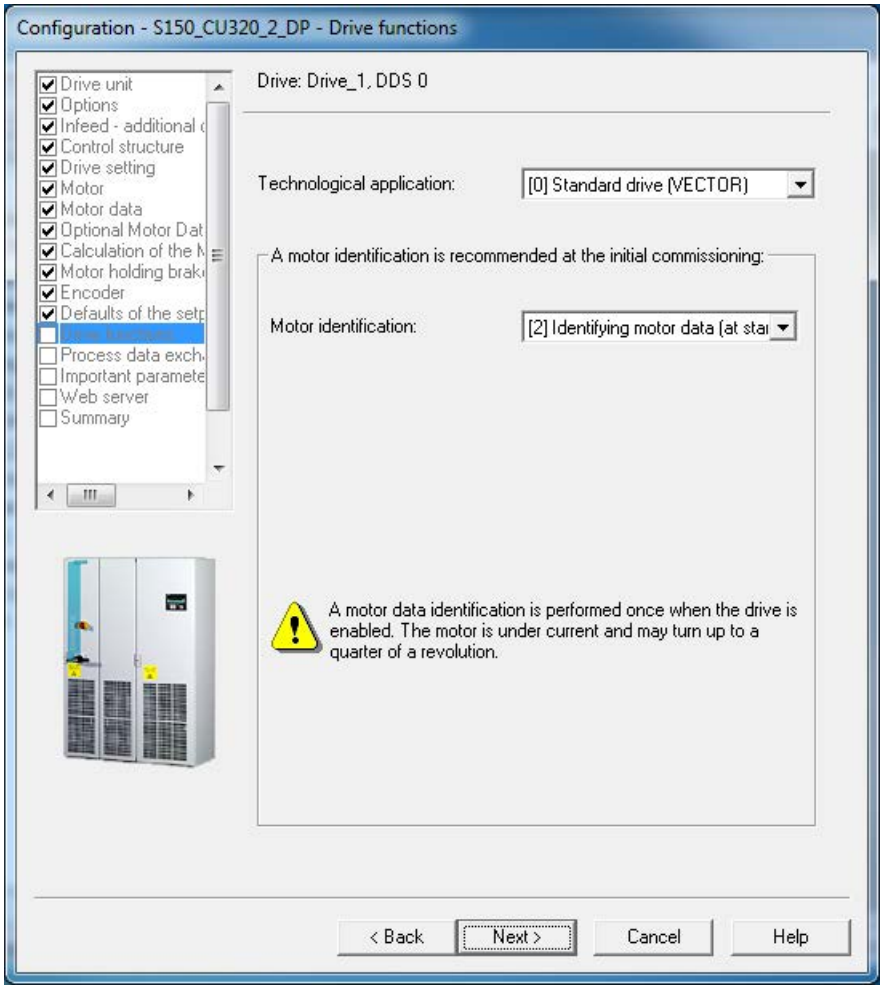

Figure 5-31 Selecting drive functions

⇒ Select the required data:

- **Technological application:**
  - **"(0) Standard drive (VECTOR)"** (default setting)
    Edge modulation is not enabled.
    The dynamic voltage reserve is increased (10 V), which reduces the maximum output voltage.
  - **"(1) Pumps and fans"**
    Edge modulation is enabled.
    The dynamic voltage reserve is reduced (2 V), which increases the maximum output voltage.
  - **"(2) Encoderless control down to f = 0 (passive loads)"**
    Closed-loop controlled operation down to zero speed is possible for passive loads.
    These include applications in which the load cannot produce a regenerative torque on startup and the motor comes to a standstill when pulses are inhibited.

- **"(4) Dynamic response in the field weakening range"**
  Space vector modulation with overmodulation is enabled.
  The dynamic voltage reserve is increased (30 V), which reduces the maximum output voltage.
- **"(5) Start-up with high break loose torque"**
  This selection is suitable for speed-controlled start-up with sensorless vector control.
  Start-up current permanent and is increased upon accelerating.
- **"(6) High load inertia"**
  Suitable for high load inertia with/without gearbox coupling.
  The acceleration model is activated, the acceleration control is 100%.

- **Motor identification:**
  - (0): Disabled
  - (1): Identify motor data (standstill) and optimize the closed-loop speed control
  - (2): Identify motor data (standstill)
  - (3): Optimize the closed-loop speed control (rotating)

Note

Identifying motor data at standstill

For SINAMICS S150, in many cases "Identify motor data (at standstill) and optimize speed control" is the correct selection, especially for speed control with encoder.
Generally, this measurement is performed with a motor that is not coupled to a load.

WARNING

Unexpected motor movement during motor identification in the rotating mode

Motor movement caused by the motor data identification routine can result in death, severe injury or material damage.

- Ensure that nobody is in the hazardous zone - and that the mechanical system can freely move.
- Ensure that the EMERGENCY STOP functions are fully functional when commissioning the drive.

⇒ Click **Continue >**

Selecting process data exchange

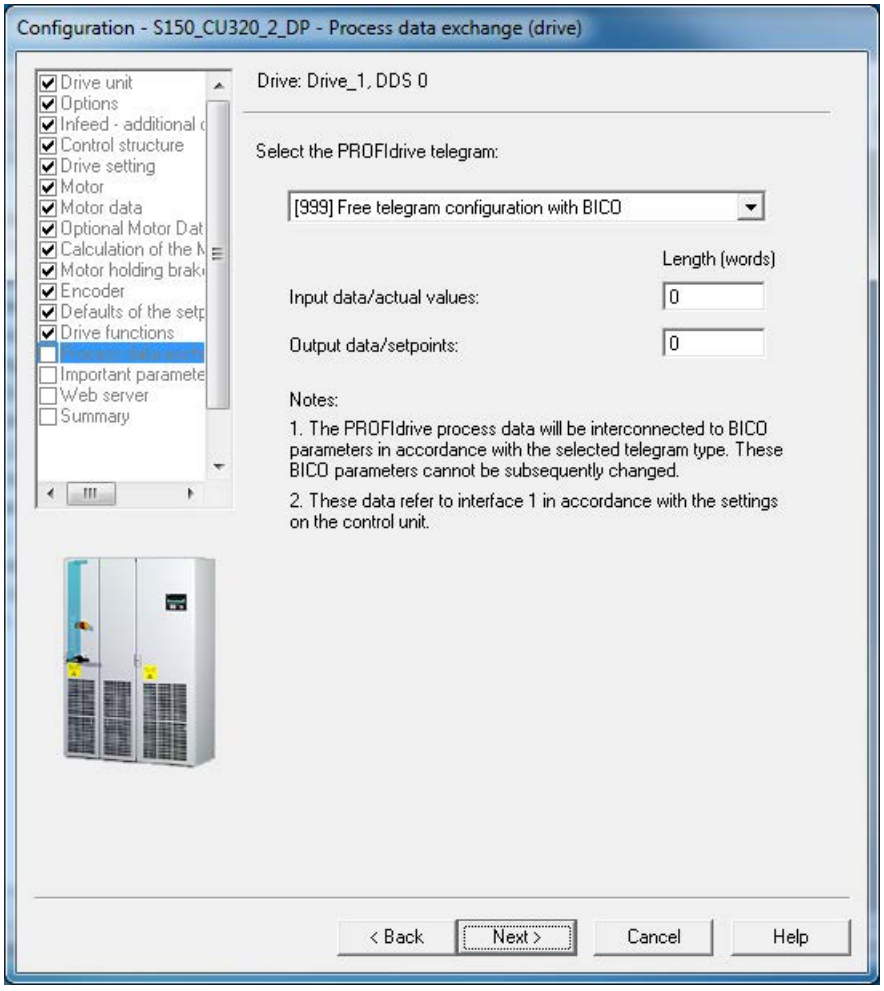

Figure 5-32 Selecting process data exchange

⇒ select the PROFIdrive telegram type.

Message frame types

- 1: Standard telegram 1, PZD-2/2
- 2: Standard telegram 2, PZD-4/4
- 3: Standard telegram 3, PZD-5/9
- 4: Standard telegram 4, PZD-6/14
- 20: SIEMENS telegram 20, PZD-2/6
- 220: SIEMENS telegram 220, PZD-10/10
- 352: SIEMENS telegram 352, PZD-6/6
- 999: Free telegram configuration with BICO (default setting)

⇒ Click **Continue >**

Entering important parameters

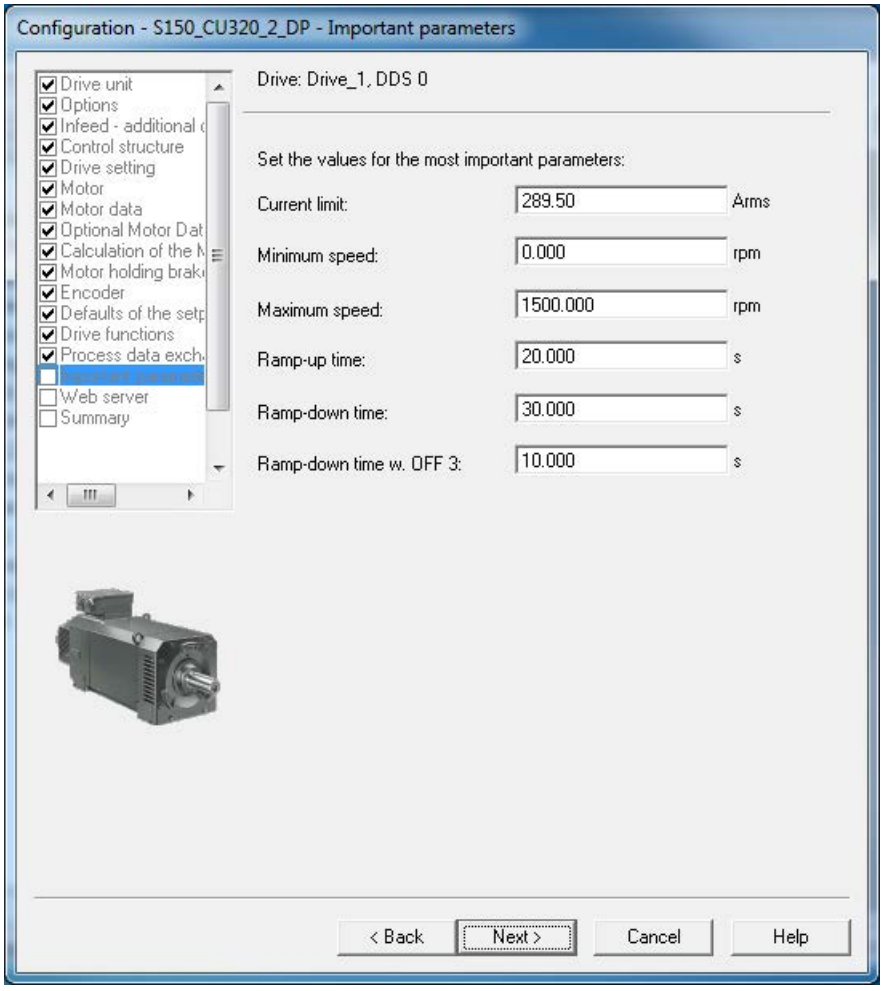

Figure 5-33 Important parameters

⇒ Enter the required parameter values.

Note

Tooltips

STARTER provides tooltips if you position your cursor on the required field **without clicking in the field**.

⇒ Click **Continue >**

Web server

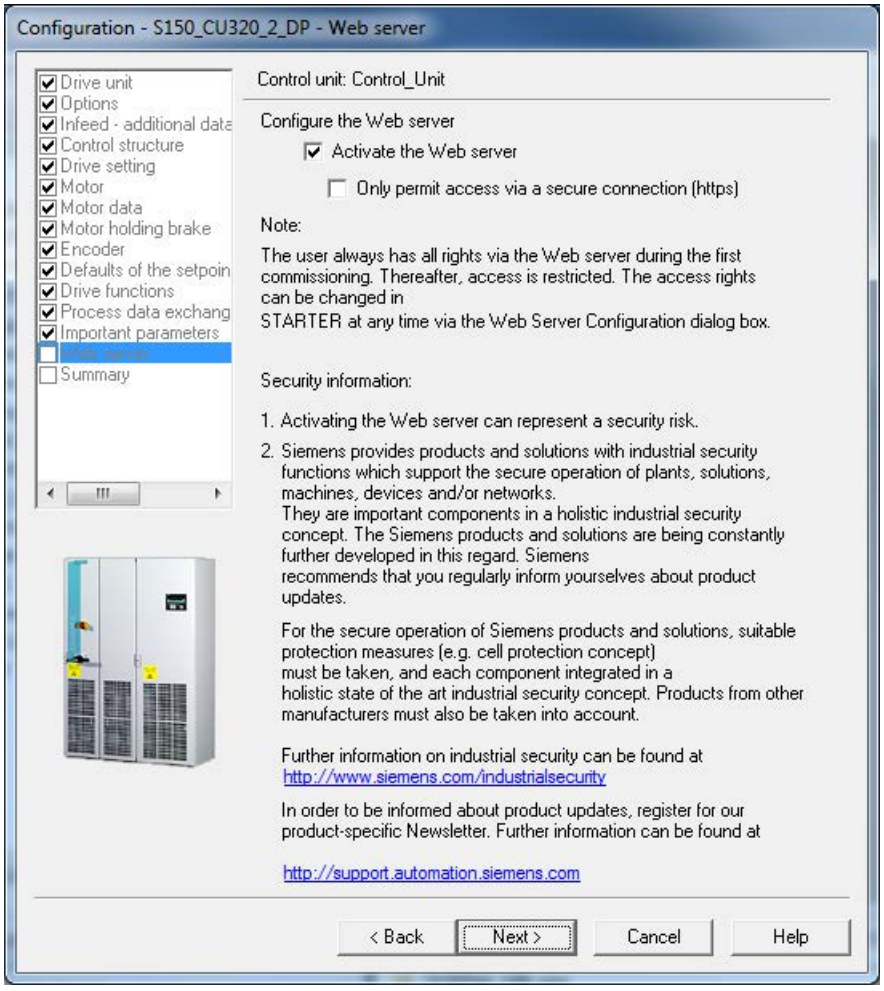

Figure 5-34 Web server

⇒ Configure the web server.

The web server is already active in the factory settings.

Activate and deactivate the web server under **Activate web server**.

Select **Only allow access via secure connection (https)** if necessary.

Note

Industrial Security

Observe the notes on industrial security.

⇒ Click **Continue >**

Summary of the drive unit data

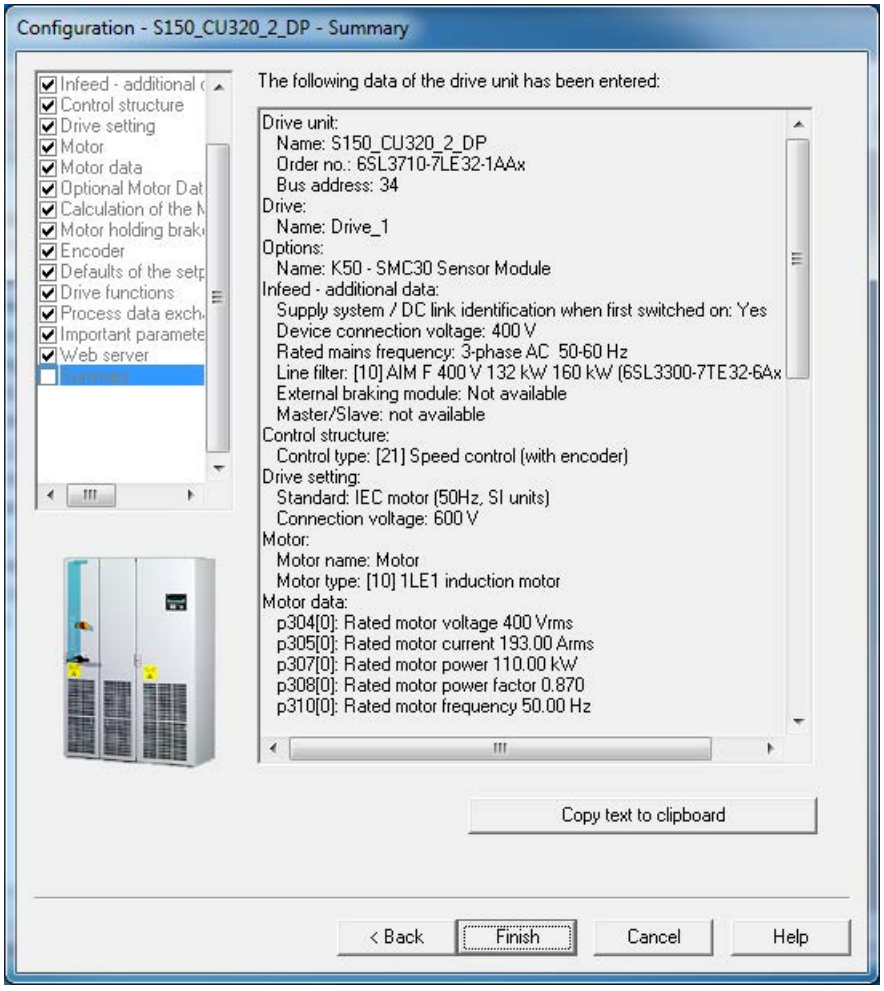

Figure 5-35 Summary of the drive unit data

⇒ You can use the **Copy to clipboard** function to copy the summary of the drive unit data displayed on the screen to a word processing program for further use.

⇒ Click **Finish**.

⇒ Save your project to the hard disk by choosing **Project > Save**.

5.3.3 Transferring the drive project

You have created a project and saved it to your hard disk. You now have to transfer your project configuration data to the drive unit.

Specifying the online access point

To connect to the target system, the chosen access point must be specified.

In the menu bar, select **Target system** > **Select target devices ...**; the following dialog screen appears.

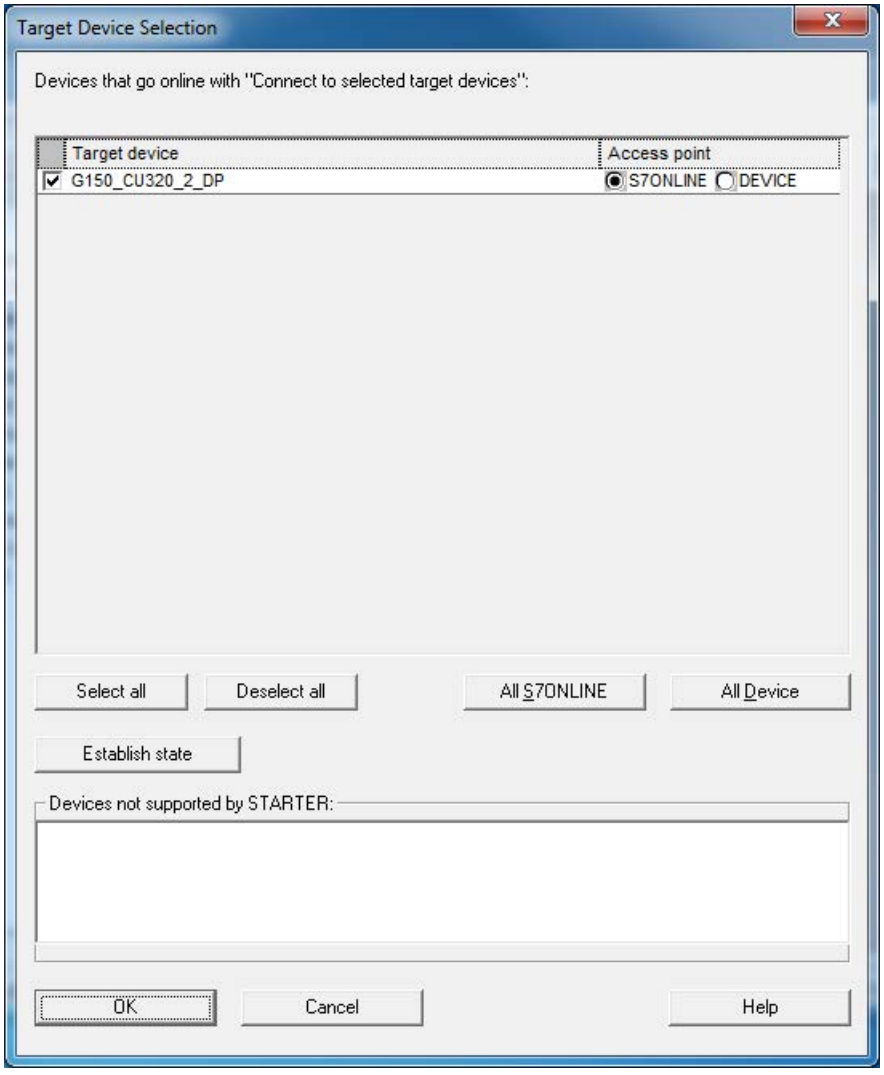

Figure 5-36 Target device selection and access points

The dialog screen lists all existing devices in the project.

Specify access point:

- Select S7ONLINE access for a device, if the connection to the programming device or PC is established via PROFINET or PROFIBUS.
- Select DEVICE access for a device if the connection to the programming device or PC is established via the Ethernet interface.

Transferring the STARTER project to the drive unit

To transfer the STARTER project you created offline to the drive unit, carry out the following steps:

Step		Selection in toolbar
1	Select menu item **Project > Connect to selected target system**	
2	Choose the menu item **Target system > Load > Load project to target system** **Save project data so it is protected against power failure** The project has now been loaded to the drive unit. This data is currently available only in the drive unit's volatile memory and not on the CompactFlash Card! To store the project data on the memory card so that it is protected in the event of a power failure, carry out the following step.	
3	Select menu item **Target system > Copy from RAM to ROM**	

Note

Copy from RAM to ROM

The **Copy from RAM to ROM** icon is only active when the drive unit is selected in the project navigator.

Results of the previous steps

- You have created a drive unit project offline using STARTER.
- You have saved the project data to the hard disk on your PC.
- You have transferred the project data to the drive unit.
- You have saved your project data to your drive's memory card so that it is backed up in the event of a power failure.

Note

Tip for working with STARTER

The STARTER commissioning tool supports complex drive system operations.

If you are confronted with any system conditions in online mode that are beyond your control, you are advised to delete the drive project from the project navigator and carefully create a new project in STARTER using the appropriate configuration data for your application.

5.3.4 Commissioning with STARTER via Ethernet

Description

The Control Unit can be commissioned using a programming device (PG/PC) via the integrated Ethernet interface. This interface is provided for commissioning purposes only and cannot be used to control the drive in operation.

A routing of the integrated Ethernet interface via any inserted CBE20 expansion card is not possible.

Preconditions

- STARTER as of version 4.1.5
- Control Unit CU320-2 DP as of device version "C", CU320-2 PN Control Unit

STARTER via Ethernet (example)

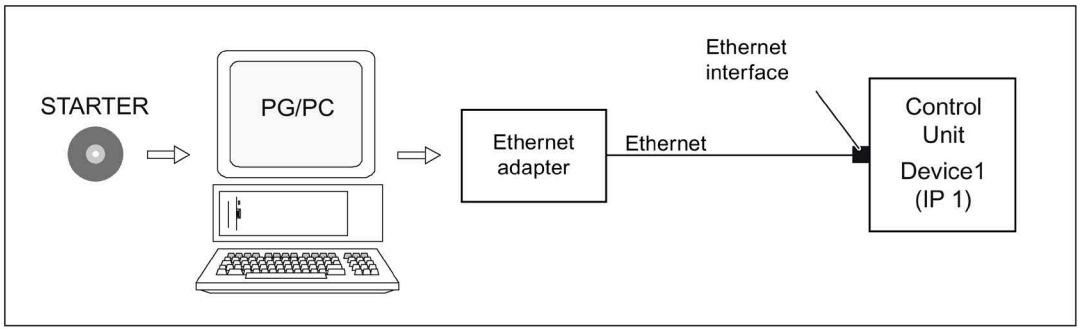

Figure 5-37 STARTER via Ethernet (example)

Procedure for establishing online operation via Ethernet

1. Install the Ethernet interface in the PG/PC according to the manufacturer's specifications.
2. Set the IP address of the Ethernet interface in Windows.
   – Assign the PG/PC a free IP address (e.g. 169.254.11.1).
   – The factory setting for the internal Ethernet interface -X127 of the Control Unit is 169.254.11.22.
3. Set the access point of the STARTER commissioning tool.
4. Use the STARTER commissioning tool to specify a name for the Control Unit interface.

   The Ethernet interface must be initialized so that the STARTER can establish communication. Select online operation in STARTER.

Setting the IP address in Windows

Note

The following procedure is based on the Windows 7 operating system. Operation can deviate slightly for other operating systems

1. In the PG/PC call the control panel using the "Start > Control Panel" menu item.
2. In the control panel of your PG/PC, under "Network and Internet", select the "Network and Sharing Center" function.
3. For your network card that is displayed, click the connection link.
4. Click in the status dialog of the connection on "Properties" and acknowledge the subsequent confirmation prompt with "Yes".
5. In the properties dialog of the connection, select the "Internet protocol 4 (TCP/IPv4)" element and then click "Properties".
6. In the properties dialog, activate the "Use the following IP address" option.

7. Set the IP address of the PG/PC access interface to the Control Unit to 169.254.11.1 and the subnet mask to 255.255.0.0.

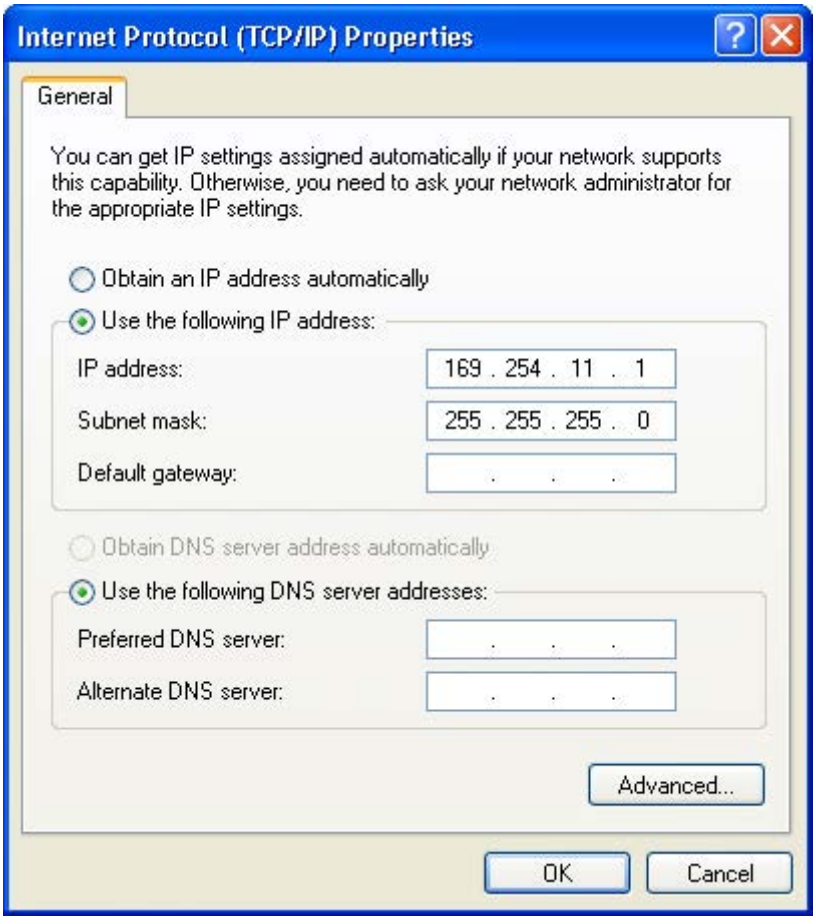

Figure 5-38 Internet Protocol (TCP/IP) properties

8. Click "OK" and close the Windows-specific window of the network connections.

Assigning the IP address and the name via STARTER, "Accessible nodes" function

Use the STARTER to assign an IP address and a name to the Ethernet interface.

1. Connect the PG/PC and the Control Unit using an Ethernet cable.
2. Switch on the Control Unit.
3. Open STARTER.
4. Create a new project or open an existing project.
5. Search for available nodes in Ethernet via Project -> Accessible nodes or the "Accessible nodes" button.

6. The SINAMICS drive object is detected and displayed as a bus node with IP address 169.254.11.22 and without name.

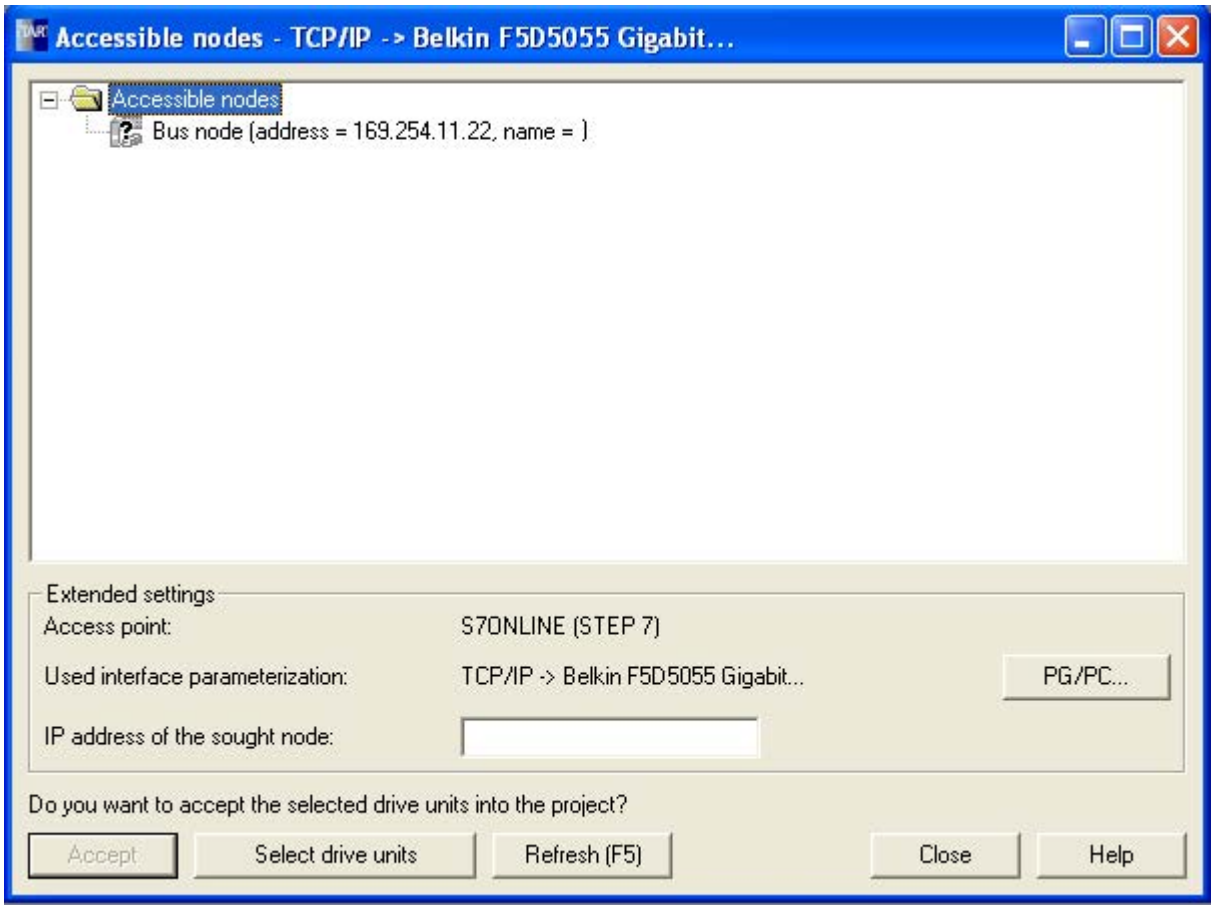

Figure 5-39 Accessible nodes

7. Mark the bus node entry and select the displayed menu item "Edit Ethernet node" with the right mouse button.
8. In the following "Edit Ethernet node" screen, enter the device name for the Ethernet interface ("drive1", for example) and click the "Assign name" button. Enter the IP address (e.g. 169.254.11.10) in the IP configuration and specify the subnet screen (e.g. 255.255.255.0). Then click the "Assign IP configuration" button and close the mask.

Note

Naming devices

ST (Structured Text) conventions must be satisfied for the name assignment of IO devices in Ethernet (SINAMICS components). The names must be unique within Ethernet.

Rules for assigning names:

- Other than "-" and ".", no special characters (such as accented characters, spaces, brackets) are permitted in the name of an IO device.
- The device name must not begin or end with the "-" character.
- The device name must not begin with a number.
- Maximum total length of 240 characters (lowercase characters, numbers, hyphen, or period).
- A name component within the device name, e.g. a string between two periods, must not exceed 63 characters.
- The device name must not take the form n.n.n.n (n = 0, ... 999).
- The device name must not begin with the character sequence "port-xyz" or "port-xyz-abcde" (a, b, c, d, e, x, y, z = 0, ... 9).

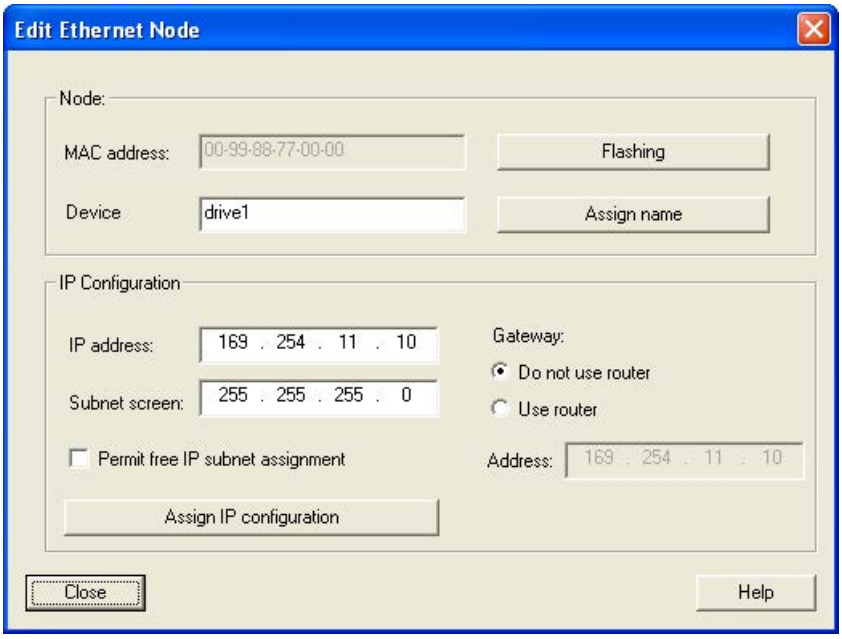

Figure 5-40 Edit Ethernet Node

9. Pressing the "Update (F5)" button displays the IP address and name in the entry for the bus node. If not, close the "Accessible nodes" screen and perform another search for accessible nodes.
10. If the Ethernet interface is displayed as bus node, select the entry and click the "Accept" button.
11. The SINAMICS drive is displayed as drive object in the project navigator.
12. You can now configure the drive unit (see Chapter "Configuring the drive unit").

Note

Storage location of the IP address

The IP address and device name are stored on the memory card of the Control Unit (non-volatile).

Parameter

Parameters can also be used to modify and/or display the properties of the Ethernet interface.

- p8900 IE name of station
- p8901 IE IP address of station
- p8902 IE default gateway of station
- p8903 IE subnet mask of station
- p8904 IE DHCP mode
- p8905 IE interface configuration
- r8910 IE name of station active
- r8911 IE IP address of station active
- r8912 IE default gateway of station active
- r8913 IE subnet mask of station active
- r8914 IE DHCP mode of station active
- r8915 IE MAC address of station

5.4 The AOP30 operator panel

Description

An operator panel is located in the cabinet door of the cabinet unit for operating, monitoring, and commissioning tasks. It has the following features:

- Graphic-capable, back-lit LCD for plain-text display and a "bar-type display" for process variables
- LEDs for indicating the operating modes
- Help function describing causes of and remedies for faults and alarms
- Keypad for controlling drives during operation
- LOCAL/REMOTE switchover for selecting the control terminal (master control assigned to operator panel or Customer Terminal Block / PROFIdrive)
- Numeric keypad for entering setpoint or parameter values
- Function keys for prompted navigation through the menus
- Two-stage security concept to protect against accidental or unauthorized changes to settings
- IP54 degree of protection (when installed).
- Selectable languages: German, English, French, Italian, Spanish, Chinese, Russian, Portuguese

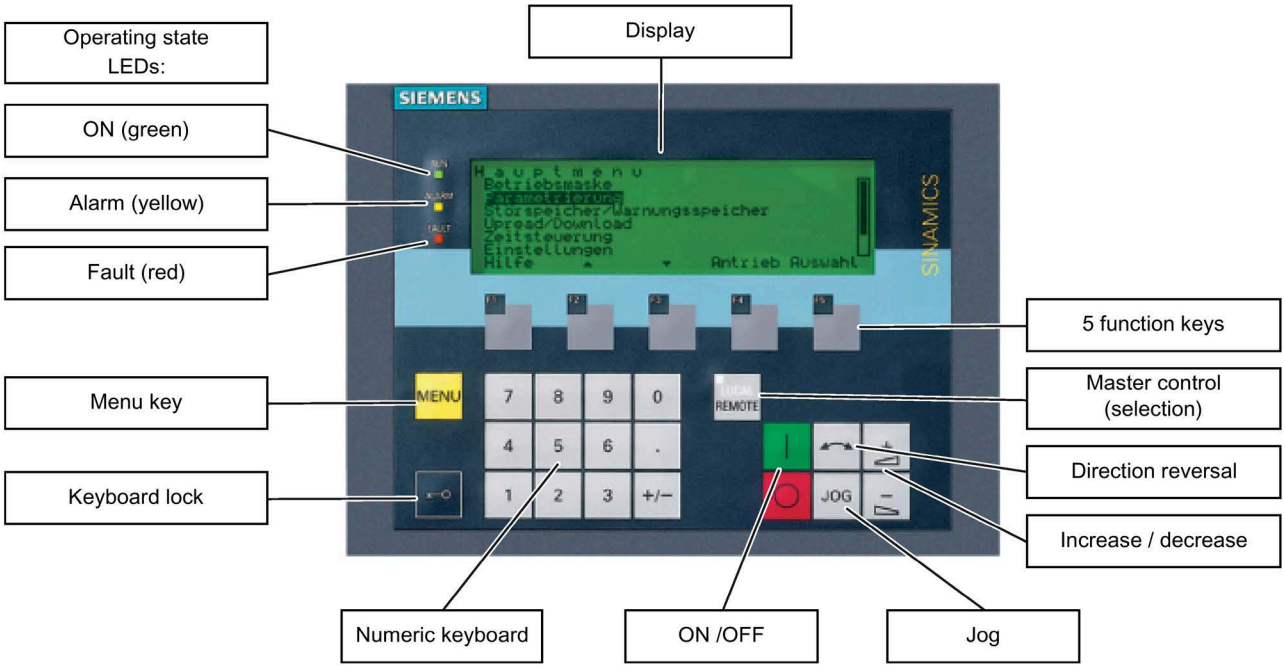

Figure 5-41 Components of the cabinet unit operator panel (AOP30)

5.5 First commissioning with the AOP30

5.5.1 First commissioning

Start screen

When the system is switched on for the first time, the Control Unit is initialized automatically. The following screen is displayed:

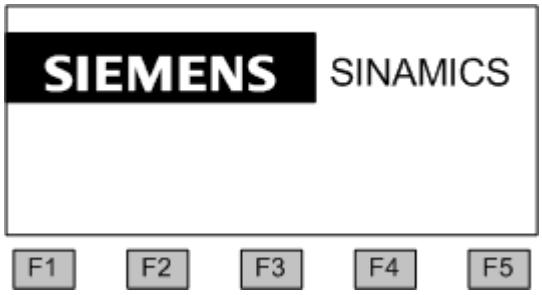

Figure 5-42 Initial screen

When the system boots up, the parameter descriptions are loaded into the operating field from the CompactFlash card.

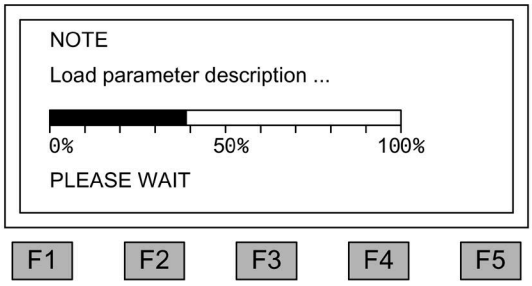

Figure 5-43 Load the parameter descriptions while booting up the system

Selecting the language

When the system is first booted up, a screen for selecting the language appears.

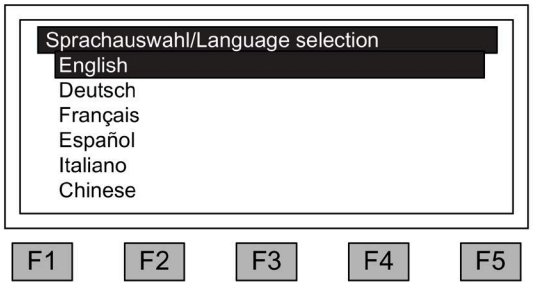

You can select the language in the dialog screen.

To change the language, choose <F2> or <F3>.
To select the language, choose <F5>.

Once the language has been selected, the booting up process continues.

Once the system has successfully ramped up, the drive has to be commissioned when the system is switched on for the first time after it has been delivered. The converter can then be switched on.

For a subsequent power up, operation can be directly started.

Navigation within the interactive screens

Within an interactive screen, the selection boxes can usually be selected using the <F2> and/or <F3> keys. Selection fields are generally texts surrounded by a frame. When they are selected, they are highlighted with a white text on a black background.
The present value of a highlighted selection box can usually be changed by pressing <F5> "OK" and/or "Change." Another entry box then appears and the value you want is entered directly using the numerical keypad or can be selected from a list.

You can change from one interactive screen to the next or previous screen by selecting the "Next" or "Previous" selection boxes and then confirming by pressing <F5> "OK."
If a screen contains particularly important parameters, the selection field "Continue" only appears at the bottom of the screen. This is because every single parameter in this interactive screen has to be checked and/or corrected thoroughly before the next interactive screen can be accessed.

With some commissioning steps, the entire commissioning can be interrupted by selecting "Interrupt COMM."

5.5.2 Basic commissioning

Acquiring motor data

During initial commissioning, you have to enter motor data using the operator panel. These can be taken from the motor type plate.

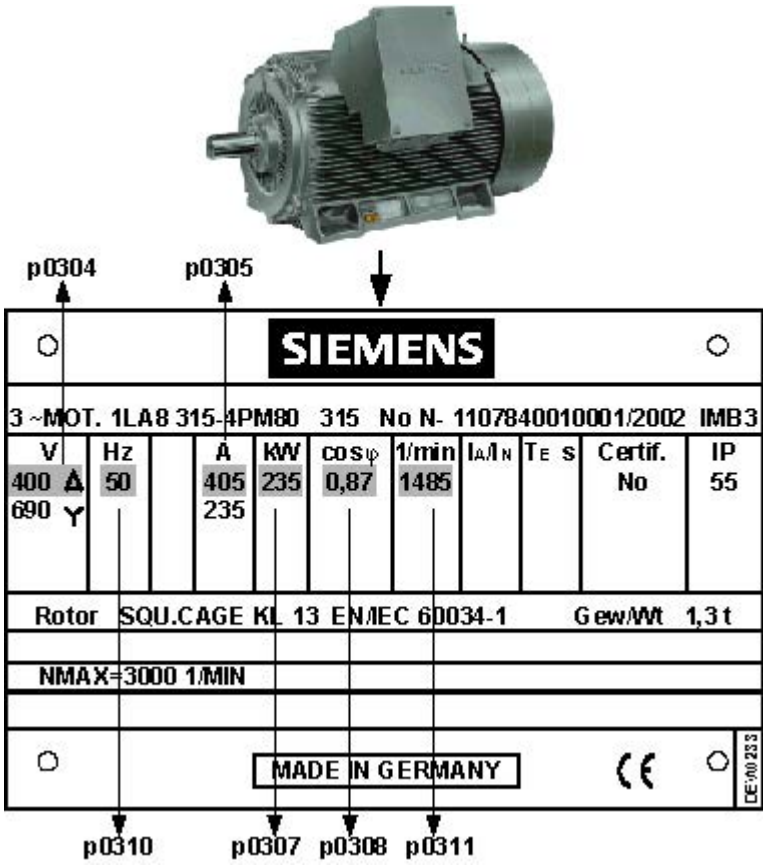

Figure 5-44 Example of a motor type plate

Table 5- 1 Motor data

	Parameter No.	Values	Unit
System of units for line frequency and entering motor data	p0100	0 1	IEC [50 Hz / kW] NEMA [60 Hz / hp]
Motor: Rated voltage Rated current Rated power Rated power factor cos ϕ (only for p0100 = 0) Rated efficiency η (only for p0100 = 1) Rated frequency Rated speed	 p0304 p0305 p0307 p0308 p0309 p0310 p0311		 [V] [A] [kW] / [hp] [%] [Hz] [min-1] / [rpm]

First commissioning: infeed

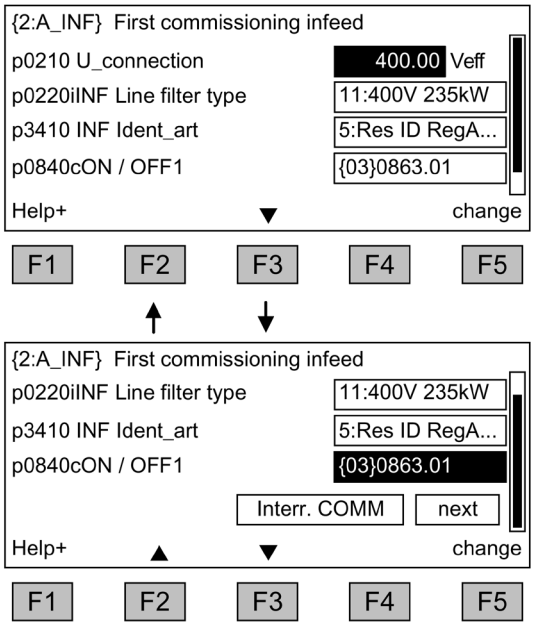

Enter the line infeed voltage in V and the line frequency in Hz.

Selection of network filter type.

Selection of type of network identification

Entry for the origin of the ON/OFF1 command.

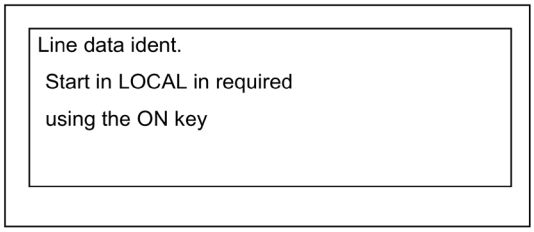

Navigate within the selection fields with <F2> and <F3>.

Activate your selection with <F5>.

Once you have entered the final value, choose "Continue" to exit the screen.

Basic commissioning: Selecting the motor type and entering the motor data

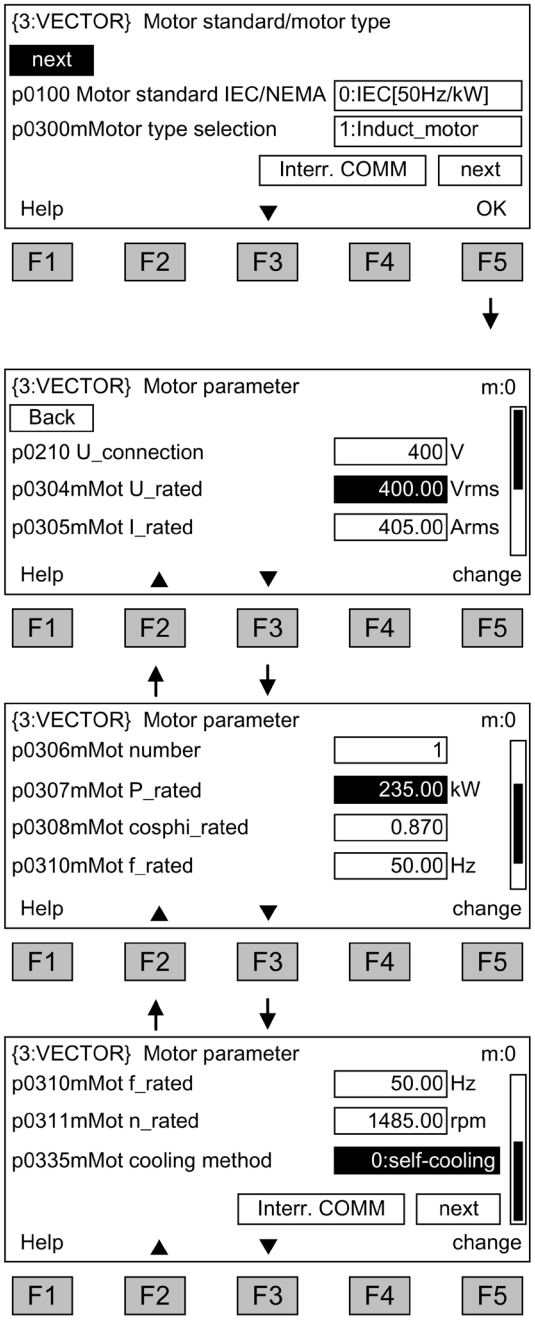

You can select the motor standard and type in the dialog screen.

The following is defined for the motor standard:

0: Line frequency 50 Hz, motor data in kW
1: Line frequency 60 Hz, motor data in hp

The corresponding motor is selected for the motor type.

Entering the motor data specified on the type plate.

To navigate through the selection fields, choose <F2> or <F3>.
To activate a selection, choose <F5>.

To change a parameter value, navigate to the required selection field and activate with <F5>.

The system displays another window in which you can:

- Enter the value directly, or
- Select the value from a list.

When you have finished entering the motor data, choose "Continue" below the final parameter value and activate with <F5>.

Note

Selecting the motor type

The selection of the motor type pre-assigns specific motor parameters and optimizes the operating characteristics and behavior. Details are described in the List Manual in the p0300 parameter.

Note

Selection of a list motor (p0300 ≥ 100)

When a motor type ≥ 100 is selected, the article number of the associated motor can be selected via drop-down list.

Note

Commissioning an induction motor

The steps described below also apply to commissioning an induction motor.

When commissioning a permanent-magnet synchronous motor (p0300 = 2), there are a few special conditions that apply, which are detailed in a separate chapter (see "Setpoint channel and closed-loop control/Permanent-magnet synchronous motors").

Basic commissioning: entering the encoder data (if available)

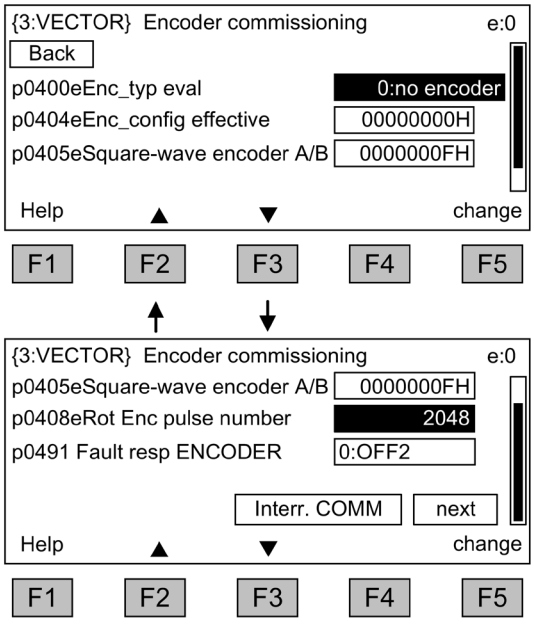

When the SMC10/SMC20/SMC30 is connected for encoder evaluation (with options K46, K48, and K50), it is recognized by the AOP30 and a screen is displayed in which you can enter the encoder data.

Navigate within the selection fields with <F2> and <F3>.

Activate your selection with <F5>.

Predefined encoders can be easily set by selecting parameter p0400 (encoder type selection):

Encoders for SMC10:
1001: Resolver 1 speed
1002: Resolver 2 speed
1003: Resolver 3 speed
1004: Resolver 4 speed
Encoders for SMC20:
2001: 2048, 1 Vpp, A/B C/D R
2002: 2048, 1 Vpp, A/B R
2003: 256, 1 Vpp, A/B R
2004: 400, 1 Vpp, A/B R
2005: 512, 1 Vpp, A/B R
2006: 192, 1 Vpp, A/B R
2007: 480, 1 Vpp, A/B R
2008: 800, 1 Vpp, A/B R
2010: 18000, 1 Vpp, A/B R interval-coded
2012: 420, 1 Vpp, A/B R
2013: 675, 1 Vpp, A/B R
2051: 2048, 1 Vpp, A/B, EnDat, Multiturn 4096
2052: 32, 1 Vpp, A/B, EnDat, Multiturn 4096
2053: 512, 1 Vpp, A/B, EnDat, Multiturn 4096
2054: 16, 1 Vpp, A/B, EnDat, Multiturn 4096
2055: 2048, 1 Vpp, A/B, EnDat, Singleturn
2081: 2048, 1 Vpp, A/B, SSI, Singleturn
2082: 2048, 1 Vpp, A/B, SSI, Multiturn 4096
2083: 2048, 1 Vpp, A/B, SSI, Singleturn, error bit
2084: 2048, 1 Vpp, A/B, SSI, Multiturn 4096, error bit
2110: 4000 nm, 1 Vpp, A/B R interval-coded
2111: 20000 nm, 1 Vpp, A/B R interval-coded
2112: 40000 nm, 1 Vpp, A/B R interval-coded
2151: 16000 nm, 1 Vpp, A/B, EnDat, resolution 100 nm
Encoders for SMC30:
3001: 1024 HTL A/B R
3002: 1024 TTL A/B R
3003: 2048 HTL A/B R
3005: 1024 HTL A/B
3006: 1024 TTL A/B
3007: 2048 HTL A/B
3008: 2048 TTL A/B
3009: 1024 HTL A/B unipolar
3011: 2048 HTL A/B unipolar
3020: 2048 TTL A/B R with sense
3081: SSI, Singleturn, 24 V
3082: SSI, Multiturn 4096, 24 V
3090: 4096, HTL, A/B, SSI, Singleturn
3109: 2000 nm, TTL, A/B R interval-coded

Note

Connection examples for standard encoders

The chapter ("Electrical installation") contains connection examples for standard encoders.

Note

Pre-defined encoder type

If a predefined encoder type is selected using p0400, then the settings of the following parameters p0404, p0405 and p0408 cannot be changed.

If the connected encoder does not match any of the encoders predefined in p0400, follow the simple procedure below for entering the encoder data:

- Via p0400, select an encoder type whose data is similar to that of the connected encoder.
- Select "User-defined encoder" (p0400 = 9999). Previously set values are stored here.
- Adjust the bit fields of p0404, p0405, and p0408 to the data for the connected encoder.

Table 5- 2 Meaning of the bit settings for p0404

Bit	Meaning	Value 0	Value 1
20	Voltage 5 V	No	Yes
21	Voltage 24 V	No	Yes

Table 5- 3 Meaning of the bit settings for p0405

Bit	Meaning	Value 0	Value 1
0	Signal	Unipolar	Bipolar
1	Level	HTL	TTL
2	Track monitoring	None	A/B <> -A/B
3	Zero pulse	24 V unipolar	Same as A/B track
4	Switching threshold	Low	High
5	Pulse/direction	No	Yes

NOTICE

Material damage when selecting the incorrect encoder supply voltage

Once the encoder has been commissioned, the supply voltage (5/24 V) set for the encoder is activated on the SMC30 module. The encoder may be damaged, if a 5 V encoder is connected and the supply voltage has not been set correctly (bit 20 = "Yes," bit 21 = "No").

- Set the correct supply voltage for the connected encoder.

Basic commissioning: Entering the basic parameters

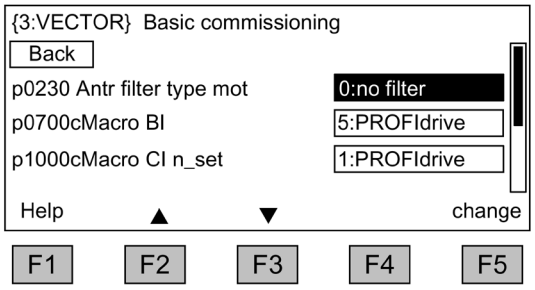

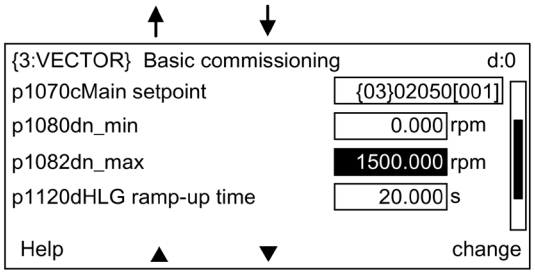

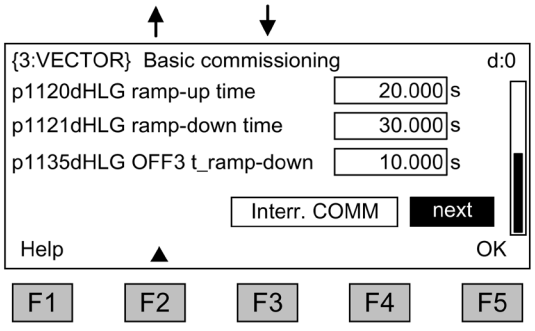

Entering the basic commissioning parameters:
If a sine-wave filter (option L15) is connected, it must be activated in p0230 (p0230 = 3) otherwise it could be damaged.

p0700: Preset command source
5: PROFIdrive
6: TM31 terminals
7: Namur
10: PROFIdrive Namur

p1000: Preset setpoint source
1: PROFIdrive
2: TM31 terminals
3: Motorized potentiometer
4: Fixed setpoint

Once a setpoint source has been selected (p1000), the main setpoint p1070 is defaulted accordingly.

To navigate through the selection fields, choose <F2> or <F3>.
To activate a selection, choose <F5>.

To change a parameter value, navigate to the required selection field and activate with <F5>.
Another window appears in which you can
- enter the required value directly, or
- select the value from a list.

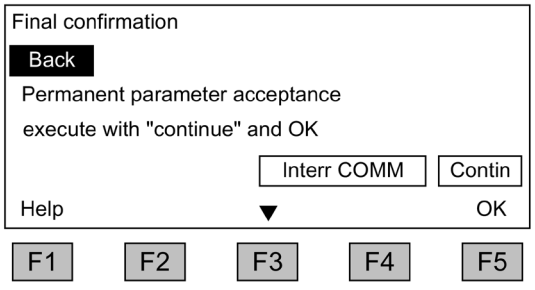

Final confirmation

Confirm the basic parameters to save them.

Once you have selected "Continue" and activated your entries with <F5>, the basic parameters you entered are permanently saved and the calculations required for closed-loop control are carried out.

Note

Enter the motor-side filter

A filter on the motor side must be entered in p0230:

- Option L07 – du/dt filter compact plus Voltage Peak Limiter: p0230 = 2
- Option L08 – motor reactor: p0230 = 1
- Option L10 – du/dt filter plus Voltage Peak Limiter: p0230 = 2
- Option L15 – sine-wave filter: p0230 = 3

When p0230 = 4 "External sine-wave filter", a separate sine-wave filter can be entered. An input mask for specific filter data then appears.

NOTICE

Damage to the sine-wave filter if it is not activated during commissioning

The sine-wave filter may be damaged if it is not activated during commissioning.

- Activate the sine-wave filter during commissioning.

NOTICE

Damage to the du/dt filter if it is not activated during commissioning

The du/dt filter may be damaged if it is not activated during commissioning.

- Activate the du/dt filter during commissioning.

Note

Motor reactor

If a motor reactor (option L08) is being used, the option selection must be activated, otherwise the closed-loop motor control will not be able to operate in an optimum fashion.

Note

Do not use a selection

The choice "no selection" is also available as default setting for the command and setpoint sources; if selected, no default settings are applied for the command and setpoint sources.

Basic commissioning: Motor identification

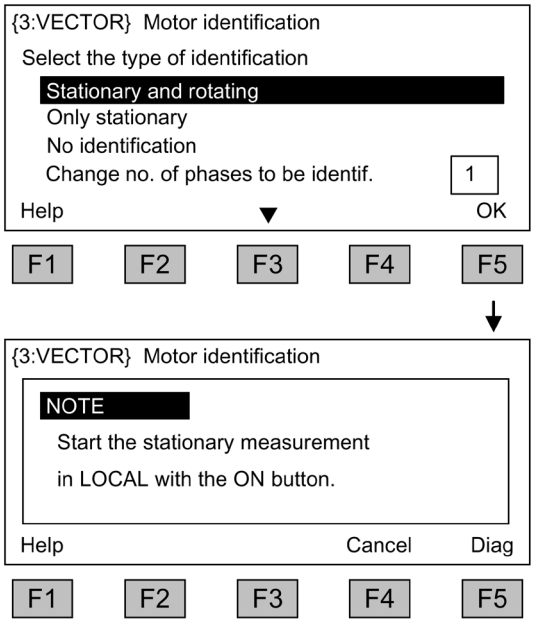

Selecting motor identification

To navigate through the selection fields, choose <F2> or <F3>.
To activate a selection, choose <F5>.

Stationary measurement increases the control performance, as this minimizes deviations in the electrical characteristic values due to variations in material properties and manufacturing tolerances.

Rotary measurement determines the data required (e.g. moment of inertia) for setting the speed controller. It also measures the magnetization characteristic and rated magnetization current of the motor.

Changing the number of phases to be identified:

- For identification with one phase, the measurement time is significantly reduced.
- For identification with several phases, the measurement results are averaged.

To activate this function, press the LOCAL key (wait until the LED in the LOCAL key lights up) and then ON.

If motor identification is not carried out, then the motor control does not operate with measured values, but with the characteristic motor values calculated from the type plate data.

Note

Complete motor identification

When motor identification has been completed, press the OFF key to cancel the power-on inhibit.

⚠ WARNING

Unexpected motor movement during motor identification in the rotating mode

When selecting motor identification with optimization in the rotating mode, after commissioning, the drive initiates that the motor rotates with speeds that can reach the maximum motor speed.

- Observe the general safety instructions.
- Ensure that the EMERGENCY STOP functions are fully functional when commissioning the drive.

Note

Activate enable signals

Make sure that the necessary enable signals have been assigned; otherwise motor identification cannot be carried out.

Note

Fault with stationary or rotating measurements

The motor identification cannot be performed if, when selecting the stationary or rotating measurement, a fault is active
Before rectifying the fault, you have to choose "No identification" and close the screen.
Motor identification can then be selected again via <MENU> - <Commissioning/service> - <Drive commissioning> - <Motor identification>.

5.6 Status after commissioning

LOCAL mode (control via operator panel)

- You switch to LOCAL mode by pressing the "LOCAL/REMOTE" key.
- Control (ON/OFF) is carried out via the "ON" and "OFF" keys.
- You can specify the setpoint using the "increase" and "decrease" keys or by entering the appropriate numbers using the numeric keypad.

Analog outputs (with option G60 "Customer terminal module TM31")

- The actual speed (r0063) is output as a current output in the range 0 to 20 mA at analog output 0 (X522:2 and 3).
  A current of 20 mA is equal to the maximum speed in p1082.
- The actual current value (r0068) is output as a current output in the range 0 to 20 mA at analog output 1 (X522:5 and 6).
  A current of 20 mA corresponds to the current limit (p0640), which is set to 1.5 times the rated motor current (p0305).

Digital outputs (with option G60 "Customer terminal module TM31")

- The "enable pulses" signal is output at digital output 0 (X542:2 and 3).
- The “no fault active” signal is output at digital output 1 (X542:5 and 6) (protection against wire break).
- The "ready for power up" signal is output at digital output 8 (X541:2).

5.7 Commissioning an encoder with gear factor

Description

When encoders are commissioned (p0010 = 4), a gearbox must be parameterized by means of parameters p0432 (numerator), p0433 (denominator), and p0410 (sign).

To ensure that the commutation position can be accurately determined from the encoder angle, the following applies:

- For resolvers: $\frac{z_{p_Motor}}{z_{p_Resolver}} \times \frac{1}{n} \geq 1, \text{Integer}$ z_p = number of poles
- For all other absolute encoders: $\frac{z_{p_Motor}}{n} \geq 1, \text{Integer}$ z_p = number of poles
- Where n is the gear factor: $n = \frac{\text{Encoder speed}}{\text{Motor speed}} = \frac{p0432}{p0433}$

The encoder commissioning program ensures that this uniqueness condition is observed and, if necessary, prevents the system from exiting the commissioning program or outputs an error message.

Sign bit p0410 inverts the calculated encoder angle and the speed, thereby yielding a negative gear factor.

5.8 Parameter reset to factory settings

The factory settings represent the defined original status of the device on delivery.

Resetting the parameters to the factory settings means that all the parameter settings made since the system was delivered are reset.

Resetting Parameters via AOP30

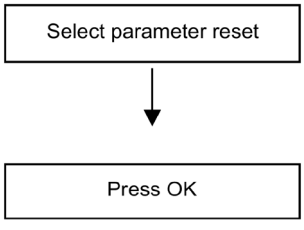

Set parameter filter to "Parameter reset":
<MENU> <Commissioning/Service> <Device commissioning> <OK> <30: Parameter Reset> <OK>

Reset all parameters to factory settings:
Factory settings for all the device parameters are restored.

Parameter reset via STARTER

With STARTER, the parameters are reset in online mode. The required steps are described below:

Step	Selection in toolbar
Choose **Project > Connect to target system**	
Click the drive unit whose parameters you want to reset to the factory settings and click **Restore factory settings** icon in the toolbar.	
To confirm, click **OK**. 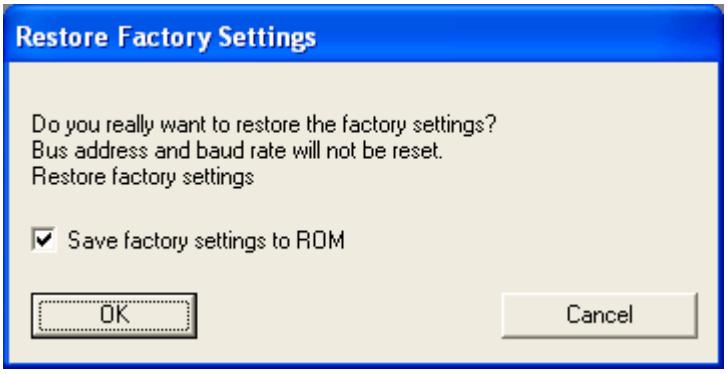 	
Choose **Target system > Copy from RAM to ROM**	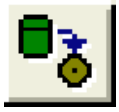

Note

Copy from RAM to ROM

The **Copy from RAM to ROM** icon is only active when the drive unit is selected in the project navigator.

When the parameters have been reset to the factory settings, initial commissioning needs to be carried out.

Operation

6

6.1 Chapter content

This chapter provides information on the following:

- Basic information about the drive system
- Command source selection via
  - PROFIdrive
  - terminal block
  - NAMUR terminal block
- Setpoint input via
  - PROFIdrive
  - Analog inputs
  - Motorized potentiometer
  - Fixed setpoints
- Control via the AOP30 operator panel
- Communication according to PROFIdrive
- Communication via
  - PROFIBUS DP
  - PROFINET IO
  - SINAMICS Link
  - EtherNet/IP
  - Modbus TCP

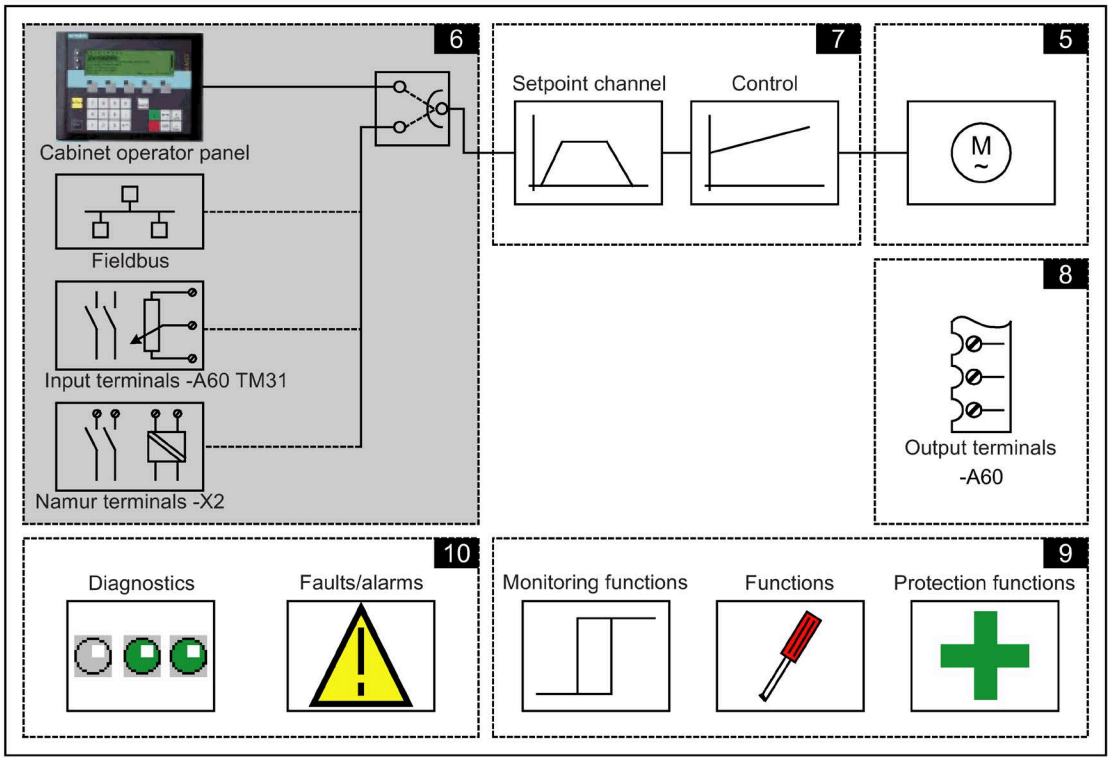

6.2 General information about command and setpoint sources

Description

4 default settings are available for selecting the command sources and 4 for selecting the setpoint sources for the SINAMICS S150 cabinet unit. The choice "no selection" is also available; if selected, no default settings are applied for the command and setpoint sources.

Command sources

- PROFIdrive
- TM31 terminals
- NAMUR
- PROFIdrive NAMUR

Setpoint sources

- PROFIdrive
- Analog inputs
- Motorized potentiometer
- Fixed setpoints

The various assignments are explained in the following sections.

Note

Default settings

Make sure that the default settings you choose during commissioning are compatible with the cabinet configuration (see "Commissioning")

Emergency STOP signals (L57, L59, and L60) and motor protection signals (L83 and L84) are always active (regardless of the command source).

Function diagrams

At certain points in this chapter, reference is made to function diagrams with a 4-digit number. These are stored on the customer DVD in the "SINAMICS S120/S150 List Manual", which provides experienced users with detailed descriptions of all the functions.

6.3 Basic information about the drive system

6.3.1 Parameters

Overview

The drive is adapted to the relevant drive task by means of parameters. Each parameter is identified by a unique parameter number and by specific attributes (e.g. read, write, BICO attribute, group attribute, and so on).

The parameters can be accessed via the following means:

- PC with the "STARTER" commissioning tool via PROFIBUS or PROFINET or via Ethernet
- The user-friendly AOP30 Operator Panel

Parameter types

The following adjustable and display parameters are available:

- Adjustable parameters (write/read)

  These parameters have a direct impact on the behavior of a function.

  Example: Ramp-up and ramp-down time of a ramp-function generator
- Display parameters (read-only)

  These parameters are used to display internal variables.

  Example: current motor current

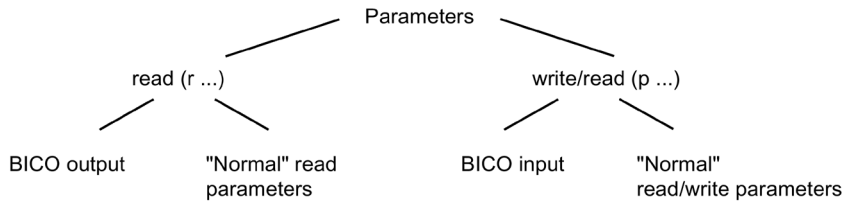

Figure 6-1 Parameter types

All these drive parameters can be read and changed via PROFIBUS or PROFINET using the mechanisms defined in the PROFIdrive profile.

Parameter categories

The parameters for the individual drive objects (see "Drive objects") are categorized according to data sets as follows (see "Operation/data sets"):

- Data-set-independent parameters
  These parameters exist only once per drive object.
- Data-set-dependent parameters
  These parameters can exist several times for each drive object and can be addressed via the parameter index for reading and writing. A distinction is made between various types of data set:
  - CDS: Command data set
    By parameterizing several command data sets and switching between them, the drive can be operated with different pre-configured signal sources.
  - DDS: Drive data set
    The drive data set contains the parameters for switching between different drive control configurations.

  The CDS and DDS can be switched over during normal operation. Additional data record types also exist, however these can only be activated indirectly by means of a DDS changeover.
  - EDS: encoder data set
  - MDS: Motor data set

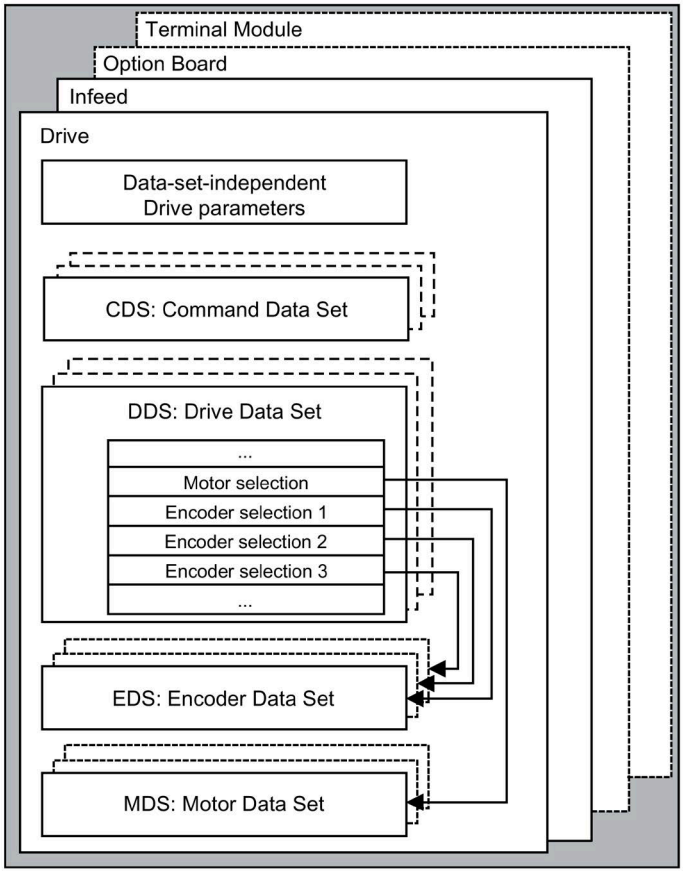

Figure 6-2 Parameter categories

6.3.2 Drive objects

A drive object is a self-contained software function with its own parameters and, if necessary, its own faults and alarms. Drive objects can be provided as standard (e.g. I/O evaluation), or you can add single (e.g. option board) or multiple objects (e.g. drive control).

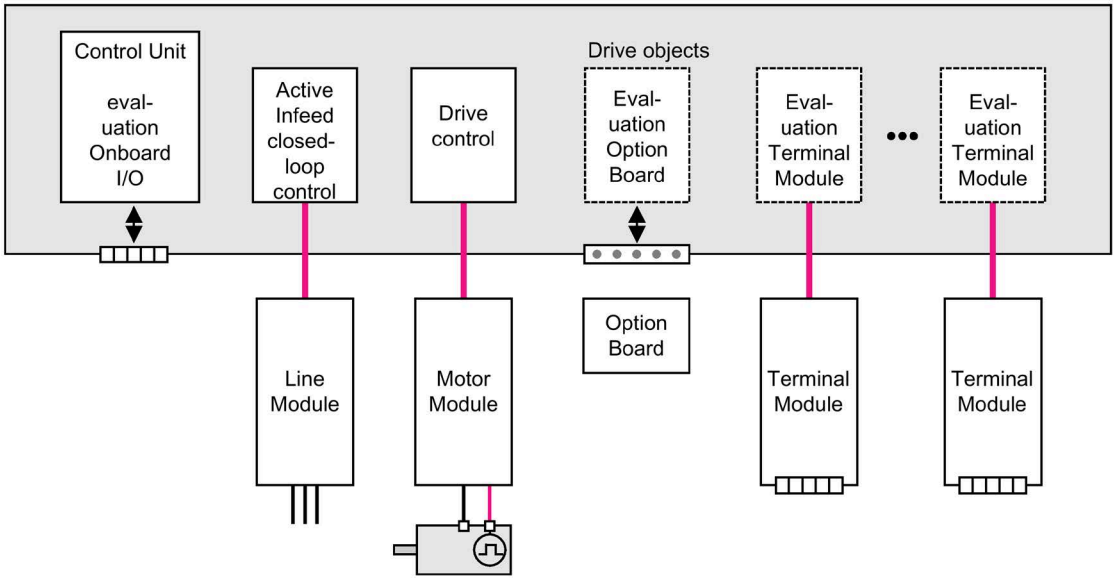

Figure 6-3 Drive objects

Standard drive objects

- Infeed: Infeed control for Active Line Module
  If an Active Line Module is used for the infeed in a drive system, open-loop/closed-loop control is implemented on the Control Unit within a corresponding drive object.
- Drive control
  Drive control handles closed-loop control of the motor. 1 Motor Module and at least 1 motor and up to 3 sensors are assigned to the drive control.
- Control Unit, inputs/outputs
  The inputs/outputs on the Control Unit are evaluated within a drive object.

Optionally installed drive objects

- Option board evaluation

  A further drive object handles evaluation of an installed option board. The specific method of operation depends on the type of option board installed.
- Terminal Module evaluation

  A separate drive object handles evaluation of the respective optional Terminal Modules.

Properties of a drive object

- Separate parameter space
- Separate window in STARTER
- Separate fault/alarm system (for CU, VECTOR, A_INF)
- Separate PROFIdrive telegram for process data (for CU, VECTOR, A_INF)

Configuring drive objects

When you commission the system for the first time using the STARTER tool, you will use configuration parameters to set up the software-based "drive objects" which are processed on the Control Unit. Various drive objects can be created within a Control Unit.

The drive objects are configurable function blocks and are used to execute specific drive functions.

If you need to configure additional drive objects or delete existing ones after initial commissioning, the drive system must be switched to configuration mode.

The parameters of a drive object cannot be accessed until the drive object has been configured and you have switched from configuration mode to parameterization mode.

Note

Assignment during the initial commissioning

Each installed drive object is allocated a number between 0 and 63 during initial commissioning for unique identification.

Parameters

- p0101 Drive object numbers
- r0102 Number of drive objects
- p0107 Drive object type
- p0108 Drive object configuration

6.3.3 Data sets

Description

For many applications, it is beneficial if more than one parameter can be changed simultaneously by means of **one** external signal during operation/when the system is ready for operation.

This can be carried out using indexed parameters, whereby the parameters are grouped together in a data set according to their functionality and indexed. Indexing allows several different settings, which can be activated by switching the data set, to be defined in each parameter.

Note

Copying data sets

The command data sets and drive data sets can be copied in STARTER (Drive -> Configuration -> "Command data sets" or "Drive data sets" tab).
The displayed command and drive data sets can be selected in the associated STARTER screen forms.

CDS: Command data set

The BICO parameters (binector and connector inputs) are grouped together in a command data set. These parameters are used to interconnect the signal sources of a drive (see "Operation/BICO technology: Interconnecting signals").

The parameters that are grouped together in the command data set are marked in the SINAMICS parameter list with "Data set CDS" and are assigned an index [0..n].

By parameterizing several command data sets and switching between them, the drive can be operated with different pre-configured signal sources.

A command data set contains the following (examples):

- Binector inputs for control commands (digital signals)
  - ON/OFF, enable signals (p0844, etc.)
  - Jog (p1055, etc.)
- Connector inputs for setpoints (analog signals)
  - Voltage setpoint for U/f control (p1330)
  - Torque limits and scaling factors (p1522, p1523, p1528, p1529)

In the delivery condition, two command data sets are available; this number can be increased to a maximum of four using p0170 (number of command data sets (CDS)).

The following parameters are available for selecting command data sets and for displaying the currently selected command data set:

Table 6- 1 Command data set: selection and display

CDS	Select bit 1 p0811	Select bit 0 p0810	Display	
			selected (r0836)	active (r0050)
0	0	0	0	0
1	0	1	1	1
2	1	0	2	2
3	1	1	3	3

If a command data set, which does not exist, is selected, the current data set remains active.

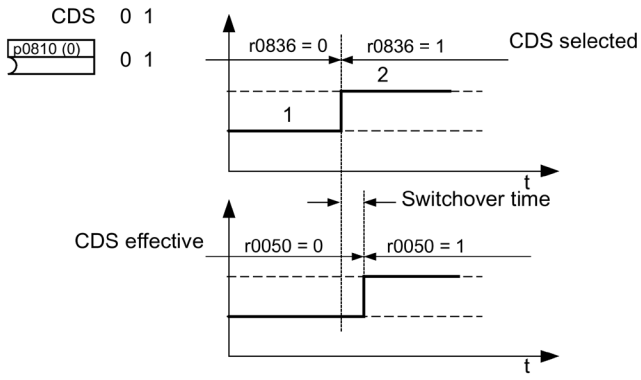

Figure 6-4 Example: Switching between command data set 0 and 1

DDS: Drive data set

A drive data set contains various adjustable parameters that are relevant with respect to open and closed-loop drive control:

- Numbers of the assigned motor and encoder data sets:
  - p0186: Assigned motor data set (MDS)
  - p0187 to p0189: up to 3 assigned encoder data sets (EDS)
- Various closed-loop control parameters, e.g.:
  - Fixed speed setpoints (p1001 to p1015)
  - Speed limits min./max. (p1080, p1082)
  - Characteristic data of ramp-function generator (p1120 ff)
  - Characteristic data of controller (p1240 ff)
  - ...

The parameters that are grouped together in the drive data set are marked in the parameter list with "Data set DDS" and are assigned an index [0..n].

It is possible to parameterize several drive data sets. You can switch easily between different drive configurations (control type, motor, encoder) by selecting the corresponding drive data set.

One drive object can manage up to 32 drive data sets. The number of drive data sets is configured with p0180.

Binector inputs p0820 to p0824 are used to select a drive data set. They represent the number of the drive data set (0 to 31) in binary format (where p0824 is the most significant bit).

- p0820 BI: Drive data set selection DDS, bit 0
- p0821 BI: Drive data set selection DDS, bit 1
- p0822 BI: Drive data set selection DDS, bit 2
- p0823 BI: Drive data set selection DDS, bit 3
- p0824 BI: Drive data set selection DDS, bit 4

Supplementary conditions and recommendations

- Recommendation for the number of DDS in a drive
  The number of DDS in a drive should correspond with the number of changeover options; in other words
  p0180 (DDS) ≥ p0130 (MDS).
- Max. number of DDS for one drive object = 32 DDS

EDS: Encoder data set

An encoder data set contains various adjustable parameters describing the connected encoder for the purpose of configuring the drive.

- Adjustable parameters, e.g.:
  - Encoder interface component number (p0141)
  - Encoder component number (p0142)
  - Encoder type selection (p0400)

The parameters that are grouped together in the encoder data set are identified in the SINAMICS parameter list by "Data set EDS" and are assigned an index [0..n].

A separate encoder data set is required for each encoder controlled by the Control Unit. Up to 3 encoder data sets are assigned to a drive data set via parameters p0187, p0188, and p0189.

An encoder data set can only be changed using a DDS changeover.

Each encoder may only be assigned to one drive and within a drive must - in each drive data set - either always be encoder 1, always encoder 2 or always encoder 3.

One application for the EDS changeover would be a power unit that alternately controls several motors. A contactor circuit is used to changeover between these motors. Each of the motors can be equipped with an encoder or be operated without an encoder. Each encoder must be connected to its own SMx.

If encoder 1 (p0187) is changed over via DDS, then an MDS must also be changed over.

One drive object can manage up to 16 encoder data sets. The number of encoder data sets configured is specified in p0140.

When a drive data set is selected, the assigned encoder data sets are selected automatically.

MDS: Motor data set

A motor data set contains various adjustable parameters describing the connected motor for the purpose of configuring the drive. It also contains certain display parameters with calculated data.

- Adjustable parameters, e.g.:
  - Motor component number (p0131)
  - Motor type selection (p0300)
  - Rated motor data (p0304 ff)
  - ...
- Display parameters, e.g.
  - Calculated rated data (p0330 ff)
  - ...

The parameters that are grouped together in the MDS are marked in the SINAMICS parameter list with "Data set MDS" and are assigned an index [0..n].

A separate motor data set is required for each motor that is controlled by the Control Unit via a Motor Module. The motor data set is assigned to a drive data set via parameter p0186.

A motor data set can only be changed using a DDS changeover.

The motor data set changeover is, for example, used for:

- Changing over between different motors
- Changeover between different windings in a motor (e.g. star-delta changeover)
- Motor data adaptation

If several motors are operated alternately on one Motor Module, a corresponding number of drive data sets must be created. See "Functions / Drive functions" for additional information and instructions on changing over motors.

One drive object can manage up to 16 motor data sets. The number of motor data sets in p0130 must not exceed the number of drive data sets in p0180.

Example of data set assignment

Table 6- 2 Example, data set assignment

DDS	Motor (p0186)	Encoder 1 (p0187)	Encoder 2 (p0188)	Encoder 3 (p0189)
DDS 0	MDS 0	EDS 0	EDS 1	EDS 2
DDS 1	MDS 0	EDS 0	EDS 3	--
DDS 2	MDS 0	EDS 0	EDS 4	EDS 5
DDS 3	MDS 1	EDS 0	--	--

Copying the command data set (CDS)

Set parameter p0809 as follows:

1. p0809[0] = number of the command data set to be copied (source)
2. p0809[1] = number of the command data to which the data is to be copied (target)
3. p0809[2] = 1

Start copying.

Copying is finished when p0809[2] = 0.

Copying the drive data set (DDS)

Set parameter p0819 as follows:

1. p0819[0] = Number of the drive data set to be copied (source)
2. p0819[1] = Number of the drive data set to which the data is to be copied (target)
3. p0819[2] = 1

Start copying.

Copying is finished when p0819[2] = 0.

Copy motor data set (MDS)

Set parameter p0139 as follows:

1. p0139[0] = Number of the motor data set that is to be copied (source)
2. p0139[1] = Number of the motor data set which should be copied into (target)
3. p0139[2] = 1

Start copying.

Copying has been completed, if p0139[2] = 0.

Function diagram

FP 8560	Command data sets (CDS)
FP 8565	Drive data set (DDS)
FP 8570	Encoder data set (EDS)
FP 8575	Motor data sets (MDS)

Parameters

- p0120 Power Module data sets (PDS) number
- p0130 Motor data sets (MDS) number
- p0139[0...2] Copy motor data set (MDS)
- p0140 Encoder data sets (EDS) number
- p0170 Command data set (CDS) number
- p0180 Drive data set (DDS) number
- p0186 [0...n] Assigned motor data set (MDS)
- p0187[0...n] Encoder 1 encoder data set number
- p0188[0...n] Encoder 2 encoder data set number
- p0189[0...n] Encoder 3 encoder data set number
- p0809[0...2] Copy command data set CDS
- p0810 BI: Command data set selection CDS bit 0
- p0811 BI: Command data set selection CDS bit 1
- p0819[0...2] Copy drive data set DDS
- p0820[0...n] BI: Drive data set selection, bit 0
- p0821[0...n] BI: Drive data set selection, bit 1
- p0822[0...n] BI: Drive data set selection, bit 2
- p0823[0...n] BI: Drive data set selection, bit 3
- p0824[0...n] BI: Drive data set selection, bit 4

6.3.4 BICO technology: Interconnecting signals

Description

Every drive contains a large number of interconnectable input and output variables and internal control variables.

The drive unit can be adapted to a wide range of requirements using BICO technology (Binector Connector Technology).

Digital signals, which can be connected freely by means of BICO parameters, are identified by the prefix BI, BO, CI or CO in their parameter name. These parameters are identified accordingly in the parameter list or in the function diagrams.

Note

Using STARTER

The STARTER parameterization and commissioning tool is recommended when using BICO technology.

Binectors, BI: binector input, BO: Binector output

A binector is a digital (binary) signal without a unit which can assume the value 0 or 1.

Binectors are subdivided into binector inputs (signal sink) and binector outputs (signal source).

Table 6- 3 Binectors

Abbreviation and symbol	Name	Description
BI	Binector input Binector Input (signal sink)	Can be interconnected to a binector output as source. The number of the binector output must be entered as a parameter value.
BO	Binector output Binector output (signal source)	Can be used as a source for a binector input.

Connectors, CI: connector input, CO: Connector output

A connector is a digital signal e.g. in 32–bit format. It can be used to emulate words (16 bits), double words (32 bits) or analog signals. Connectors are subdivided into connector inputs (signal sink) and connector outputs (signal source).

The options for interconnecting connectors are restricted to ensure that performance is not adversely affected.

Table 6- 4 Connectors

Abbreviation and symbol	Name	Description
CI	Connector input Connector input (signal sink)	Can be interconnected to a connector output as source. The number of the connector output must be entered as a parameter value.
CO	Connector output Connector output (signal source)	Can be used as a source for a connector input.

Interconnecting signals using BICO technology

To interconnect two signals, a BICO input parameter (signal sink) must be assigned to the desired BICO output parameter (signal source).

The following information is required in order to connect a binector/connector input to a binector/connector output:

- Binectors: Parameter number, bit number, and drive object ID
- Connectors with no index: Parameter number and drive object ID
- Connectors with index: Parameter number, index, and drive object ID
- Data type (signal source for connector output parameter)

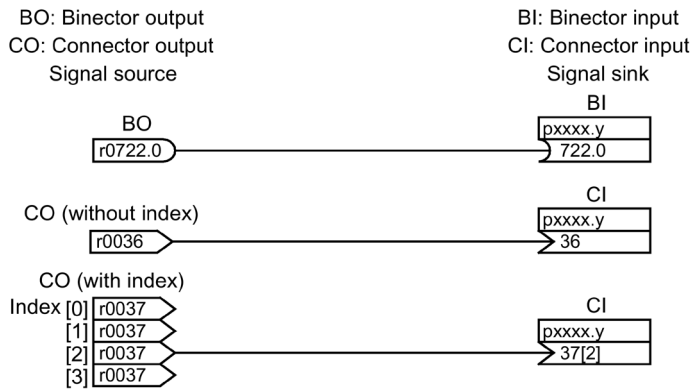

Figure 6-5 Interconnecting signals using BICO technology

Note

A connector input (CI) cannot be interconnected with any connector output (CO, signal source). The same applies to the binector input (BI) and binector output (BO).

"Data type" in the parameter list provides information about the data type of the parameter and the data type of the BICO parameter for each CI und BI parameter.

For CO and BO parameters, only the data type of the BICO parameter is given.

Notation:

- Data type BICO input: Data type parameter/Data type BICO parameter
  Example: Unsigned32 / Integer16
- Data type BICO output: Data type BICO parameter
  Example: FloatingPoint32

The possible interconnections between BICO input (signal sink) and BICO output (signal source) are described in the List Manual in the table "Possible combinations for BICO interconnections" in the section "Explanations on the parameter list".

The BICO parameter interconnection can be implemented in different data sets (CDS, DDS, MDS, etc.). The different interconnections in the data sets are activated by switching the data sets. Interconnections across drive objects are also possible.

Internal encoding of the binector/connector output parameters

The internal codes are needed, for example, to write BICO input parameters via PROFIdrive.

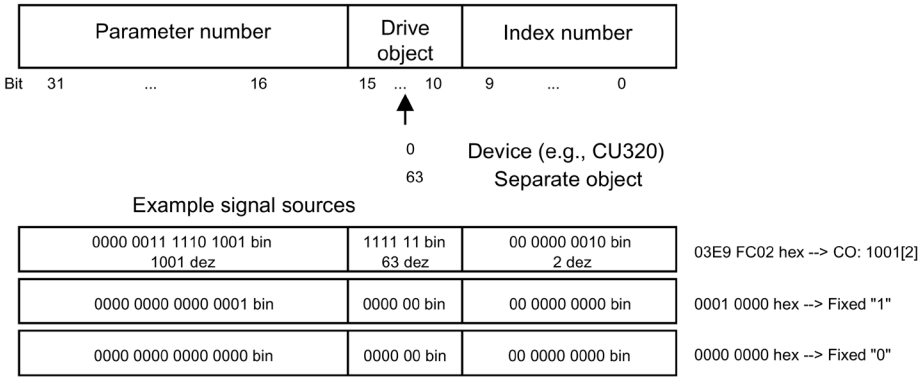

Figure 6-6 Internal encoding of the binector/connector output parameters

Example 1: interconnecting digital signals

Suppose you want to operate a drive via terminals DI 0 and DI 1 on the Control Unit using jog 1 and jog 2.

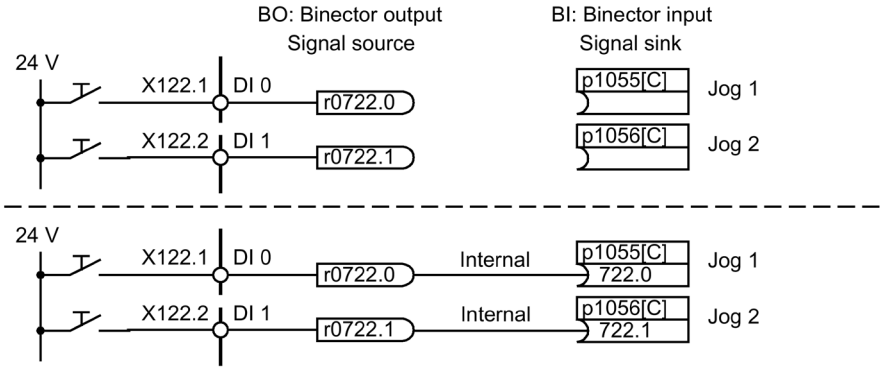

Figure 6-7 Interconnection of digital signals (example)

Example 2: connection of OC/OFF3 to several drives

The OFF3 signal is to be connected to two drives via terminal DI 2 on the Control Unit.

Each drive has a binector input 1. OFF3 and 2. OFF3. The two signals are processed via an AND gate to STW1.2 (OFF3).

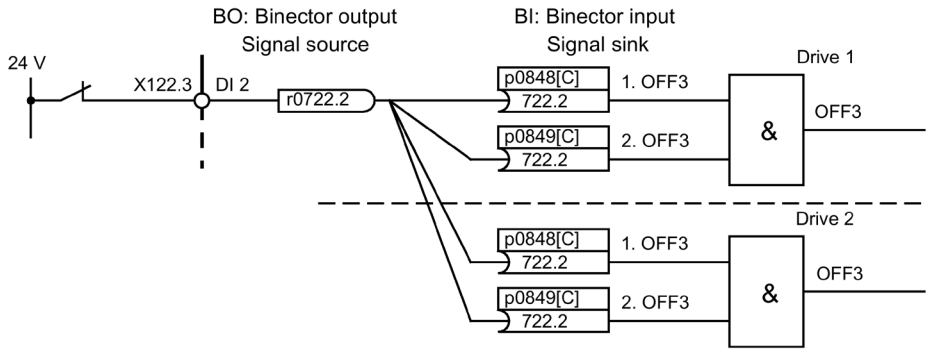

Figure 6-8 Connection of OFF3 to several drives (example)

Analysis of BICO interconnections

The following parameters exist for the analysis of existing BICO interconnections:

- r9481 Number of BICO interconnections
- r9482[0...n] BICO interconnections BI/CI parameters
- r9483[0...n] BICO interconnections BO/CO parameters
- p9494 BICO interconnections, search signal source
- p9495 BICO interconnections, search signal source number
- p9496 BICO interconnections, search signal source first index

BICO interconnections to other drives

The following parameters are available for BICO interconnections to other drives:

- r9490 Number of BICO interconnections to other drives
- r9491[0...9] BI/CI of BICO interconnections to other drives
- r9492[0...9] BO/CO of BICO interconnections to other drives
- p9493[0...9] Reset BICO interconnections to other drives

Binector-connector converters and connector-binector converters

Binector-connector converter

- Several digital signals are converted to a 32-bit integer double word or to a 16-bit integer word.
- p2080[0...15] BI: PROFIdrive PZD send bit-serial

Connector-binector converter

- A 32-bit integer double word or a 16-bit integer word is converted to individual digital signals.
- p2099[0...1] CI PROFIdrive PZD selection receive bit-serial

Fixed values for interconnection using BICO technology

The following connector outputs are available for interconnecting any fixed value settings:

- p2900[0...n] CO: Fixed value_%_1
- p2901[0...n] CO: Fixed value_%_2
- p2930[0...n] CO: Fixed Value_M_1

Example:

These parameters can be used to interconnect the scaling factor for the main setpoint or to interconnect an additional torque.

6.3.5 Propagation of faults

Forwarding faults to the Control Unit

In the case of faults that are, for example, triggered by the Control Unit or a Terminal Module, central functions of the drive are also often affected. As a result of propagation, faults that are triggered by one drive object are therefore forwarded to other drive objects. This behavior also applies to the faults that are set in a DCC chart on the Control Unit with the aid of the DCC block.

Propagation types

There are the following types of propagation:

- BICO

  The fault is propagated to all active drive objects with closed-loop control functions (infeed, drive) to which there is a BICO interconnection.

- DRIVE

  The fault is propagated to all active drive objects with closed-loop control functions.

- GLOBAL

  The fault is propagated to all active drive objects.

- LOCAL

  The behavior of this propagation type is dependent on parameter p3116.

  – With binector input p3116 = 0 (factory setting) the following applies:
    The fault is propagated to the first active drive object with closed-loop control functions.

  – With binector input p3116 = 1 signal, the following applies:
    The fault is not forwarded.

6.4 Command sources

6.4.1 "Profidrive" default setting

Preconditions

The "PROFIdrive" default setting was chosen during commissioning:

- STARTER (p0700): "PROFIdrive"
- AOP30 (p0700): "5: PROFIdrive"

Command sources

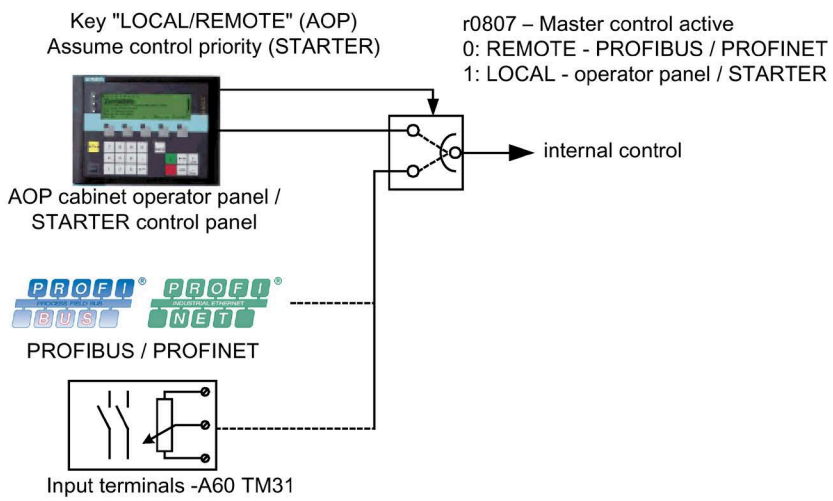

Figure 6-9 Command sources – AOP30 <--> PROFIdrive

Priority

The command source priorities are shown in the diagram "Command sources - AOP30 <-> PROFIdrive".

Note

Emergency OFF signals

The emergency OFF and motor protection signals are always active (regardless of the command source).

All of the supplementary setpoints are deactivated for LOCAL master control.

TM31 terminal assignment with "PROFIdrive" default setting (if option G60 is present)

When you choose the "PROFIdrive" default setting, use the following terminal assignment for TM31:

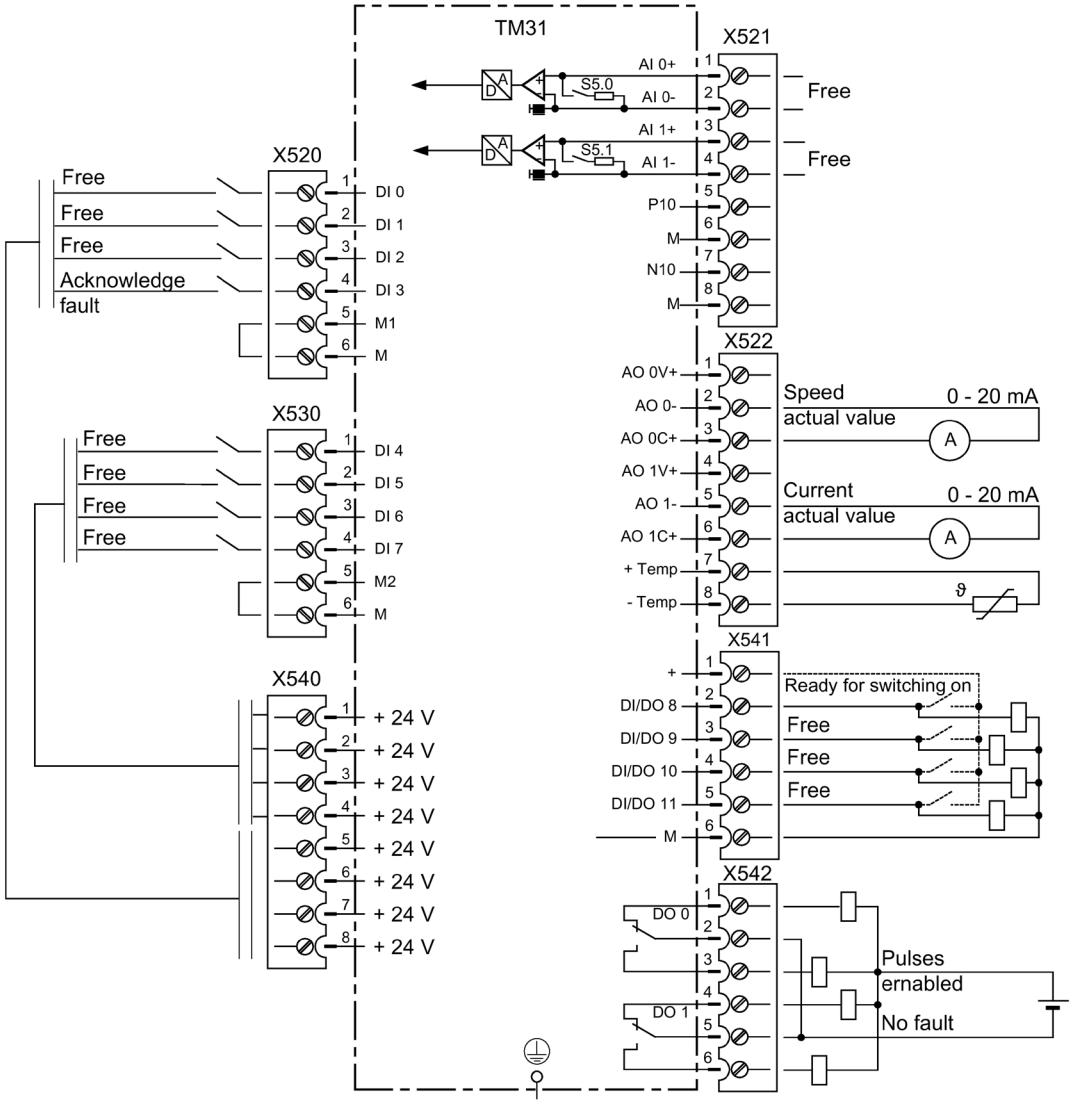

Figure 6-10 TM31 terminal assignment with "PROFIdrive" default setting

Control word 1

The bit assignment for control word 1 is described in "Description of the control words and setpoints".

Status word 1

The bit assignment for status word 1 is described in "Description of the status words and actual values".

Changing over the command source

The command source can be changed over using the LOCAL/REMOTE key on the AOP30.

6.4.2 "TM31 terminals" default setting

Preconditions

The customer Terminal Module option (G60) is installed in the cabinet unit.

The "TM31 Terminals" default setting was chosen during commissioning:

- STARTER (p0700): "TM31 Terminals"
- AOP30 (p0700): "6: TM31 terminals

Command sources

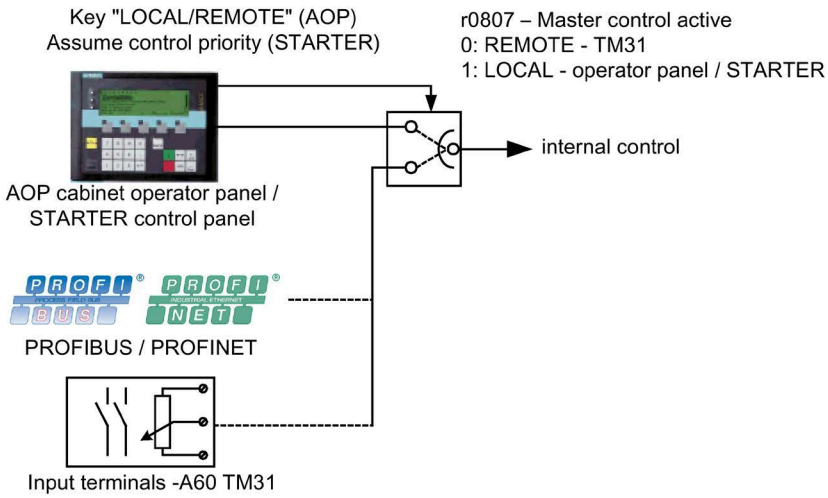

Figure 6-11 Command sources - AOP30 <-> TM31 terminals

Priority

The priority of the command sources is shown in the diagram "Command sources - AOP30 <-> TM31 terminals".

Note

Emergency OFF signals

The emergency OFF and motor protection signals are always active (regardless of the command source).

All of the supplementary setpoints are deactivated for LOCAL master control.

TM31 terminal assignment with "TM31 Terminals" default setting

When you choose the "TM31 Terminals" default setting, the terminal assignment for TM31 is as follows:

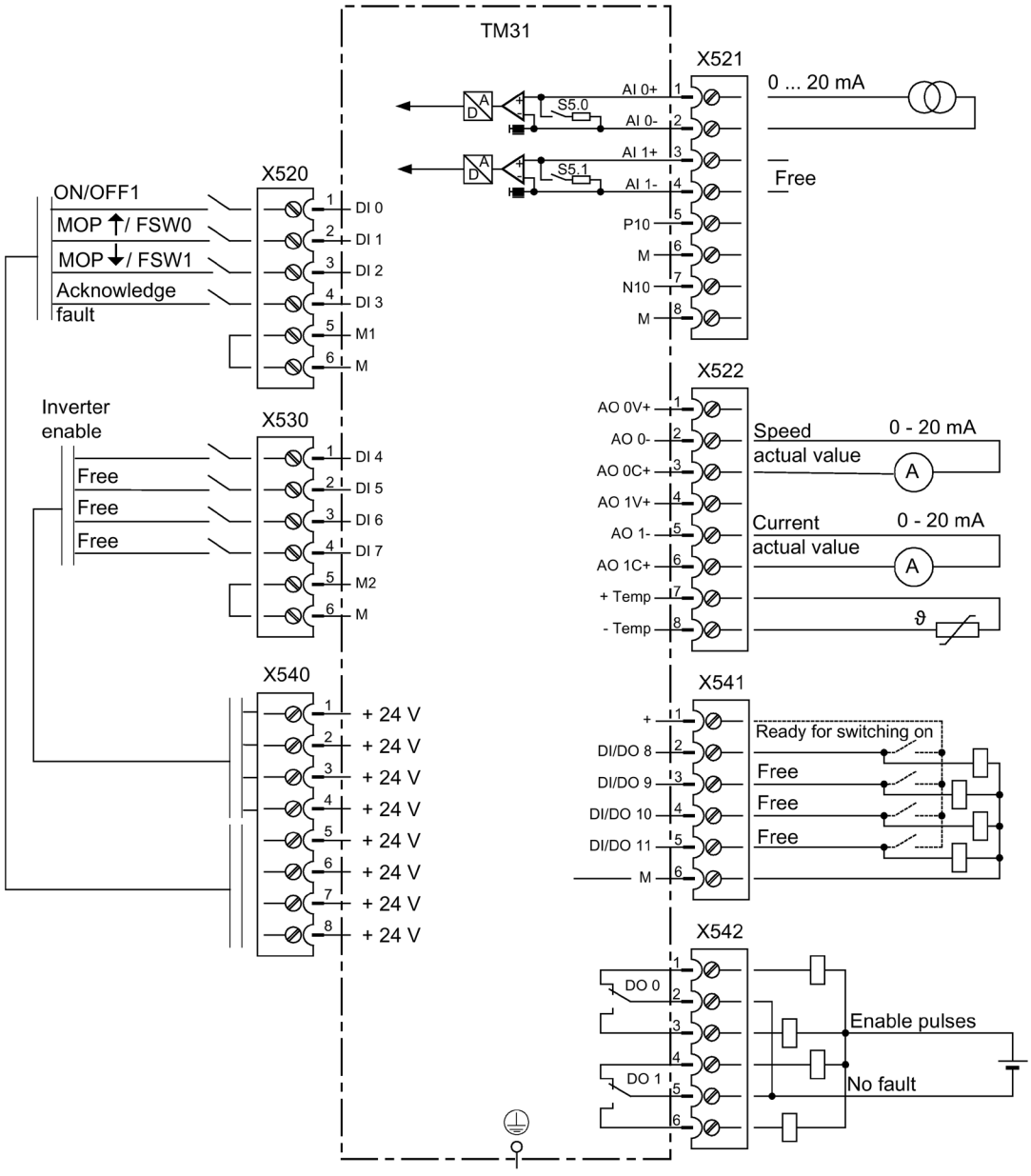

Figure 6-12 TM31 terminal assignment with "TM31 Terminals" default setting

Changing over the command source

The command source can be changed over using the LOCAL/REMOTE key on the AOP30.

6.4.3 "NAMUR" default setting

Preconditions

The NAMUR terminal block (option B00) is installed in the cabinet unit.

The "NAMUR" default setting was chosen during commissioning:

- STARTER (p0700): "NAMUR"
- AOP30 (p0700): "7: NAMUR"

Command sources

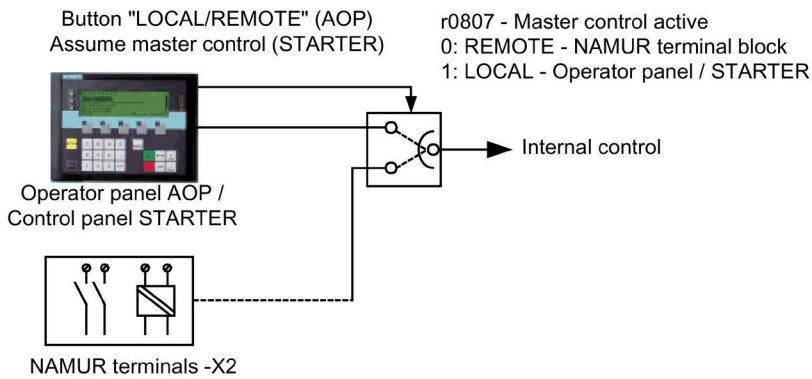

Figure 6-13 Command sources - AOP30 <-> NAMUR terminal block

Priority

The priority of the command sources is shown in the diagram "Command sources - AOP30 <-> NAMUR terminal block".

Note

Emergency OFF signals

The emergency OFF and motor protection signals are always active (regardless of the command source).

All of the supplementary setpoints are deactivated for LOCAL master control.

Terminal Assignment with the "NAMUR" Default Setting

When you choose the "NAMUR" default setting, the terminal assignment is as follows (as with option B00):

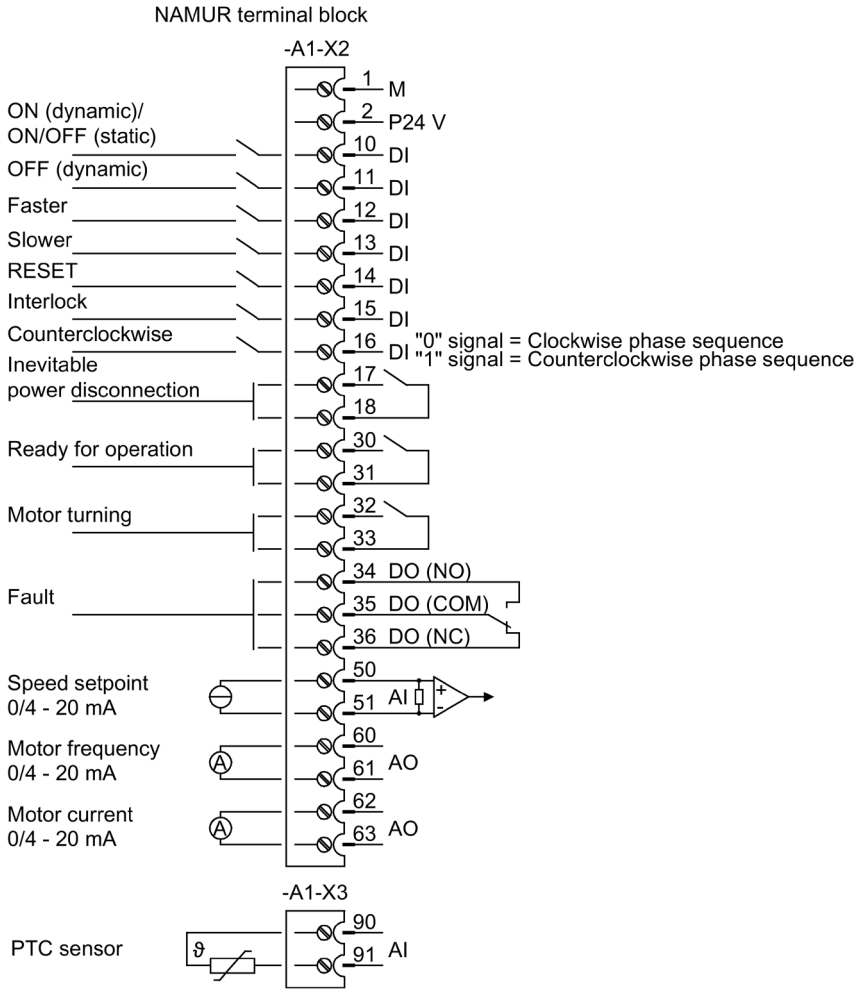

Figure 6-14 Terminal assignment with "NAMUR terminal block" default setting

Changing over the command source

The command source can be changed over using the LOCAL/REMOTE key on the AOP30.

6.4.4 "PROFIdrive NAMUR" default setting

Preconditions

The NAMUR terminal block (option B00) is installed in the cabinet unit.

The "PROFIdrive" default setting was chosen during commissioning:

- STARTER (p0700): "PROFIdrive Namur"
- AOP30 (p0700): "10: PROFIdrive Namur"

Command sources

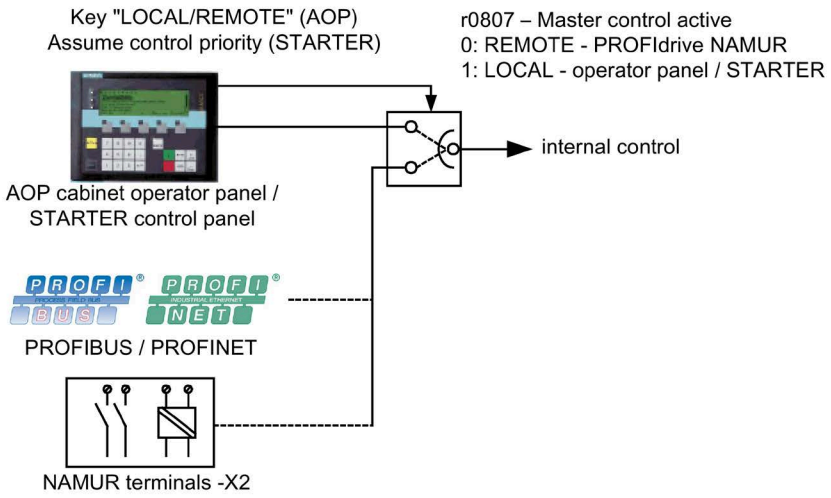

Figure 6-15 Command sources - AOP30 <-> PROFIdrive NAMUR

Priority

The priority of the command sources is shown in the diagram "Command sources - AOP30 <-> PROFIdrive NAMUR".

Note

Emergency OFF signals

The emergency OFF and motor protection signals are always active (regardless of the command source).

All of the supplementary setpoints are deactivated for LOCAL master control.

Terminal assignment for the "PROFIdrive NAMUR" default setting

When you choose the "PROFIdrive NAMUR" default setting, the terminal assignment is as follows (as with option B00):

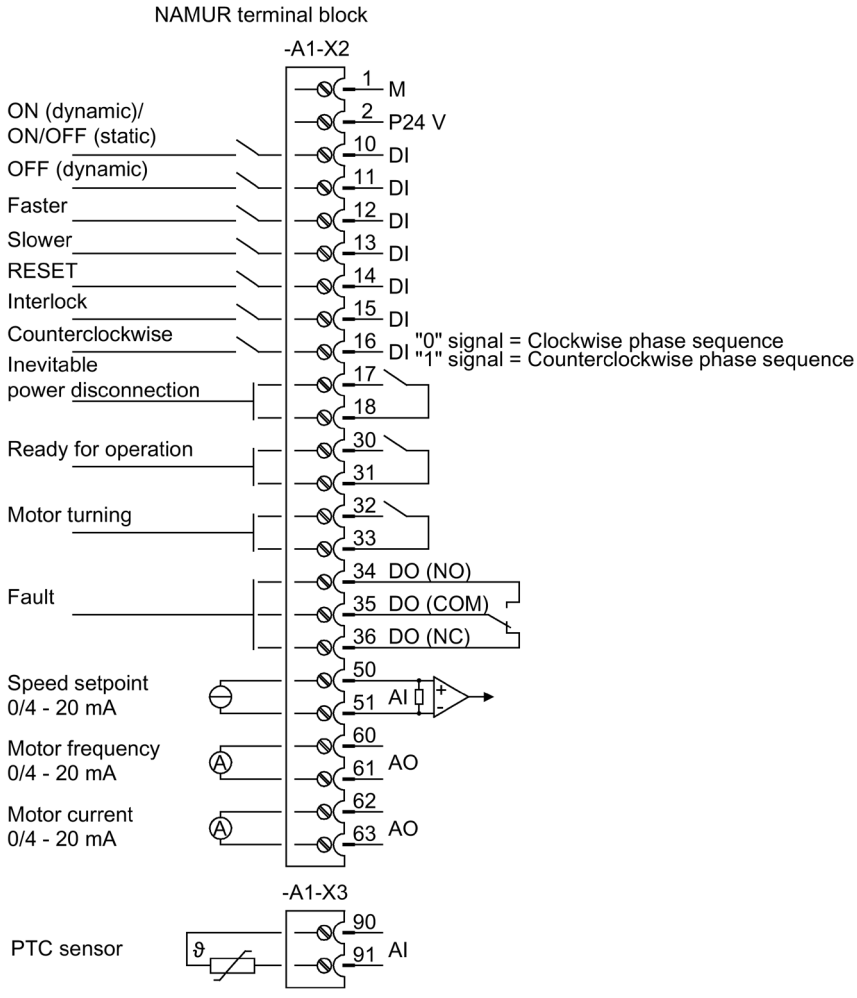

Figure 6-16 Terminal assignment for the "PROFIdrive NAMUR" default setting

Control word 1

The bit assignment for control word 1 is described in "Description of the control words and setpoints".

Status word 1

The bit assignment for status word 1 is described in "Description of the status words and actual values".

Changing over the command source

The command source can be changed over using the LOCAL/REMOTE key on the AOP30.

6.5 Setpoint sources

6.5.1 Analog inputs

Description

The customer terminal block TM31 features two analog inputs for specifying setpoints for current or voltage signals.

In the factory setting, analog input 0 (terminal X521:1/2) is used as a current input in the range 0 to 20 mA.

Precondition

The default setting for analog inputs was chosen during commissioning:

- STARTER (p1000): "TM31 terminals"
- AOP30 (p1000): "2: TM31 terminals"

Signal flow diagram

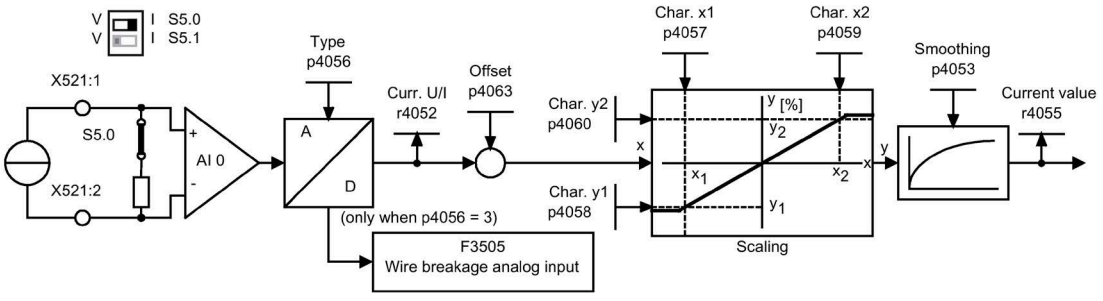

Figure 6-17 Signal flow diagram: analog input 0

Function diagram

FP 9566 TM31 – analog input 0 (AI 0)
FP 9568 TM31 – analog input 1 (AI 1)

Parameter

- r4052 Actual input voltage/current
- p4053 Analog inputs smoothing time constant
- r4055 Current referenced input value
- p4056 Analog inputs type
- p4057 Analog inputs, characteristic value x1
- p4058 Analog inputs, characteristic value y1
- p4059 Analog inputs, characteristic value x2
- p4060 Analog inputs, characteristic value y2
- p4063 Analog inputs offset

Note

Delivery condition

In the factory setting and after basic commissioning, an input current of 20 mA is equal to the main setpoint 100% reference speed (p2000), which has been set to the maximum speed (p1082).

Example: Switching analog input 0 from current to voltage input –10 to +10 V

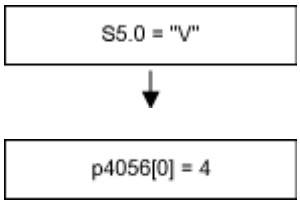

Current/voltage switchover
Set current/voltage selector to "Voltage" ("V").

Set analog input type 0 to -10 ... +10 V.

Note

Save changes so that they are protected against power failure

The change to the analog input must then be stored on the CompactFlash card so that it is protected in the event of a power failure.

F3505 – Fault: "Analog input wire break"

This fault occurs when analog input type (p4056) is set to 3 (4 ... 20 mA with wire break monitoring), and the input current of 2 mA has been undershot.

The fault value can be used to determine the analog input in question.

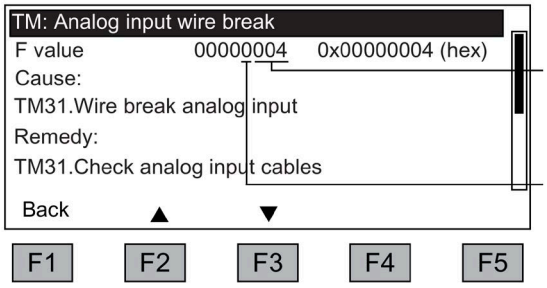

Component number
4: Module -A60 (option G60)
5: Module -A61 (option G61)

0: Analog input 0: -X521:1/2
1: Analog input 1: -X521:3/4

6.5.2 Motorized potentiometer

Description

The digital motorized potentiometer enables you to set speeds remotely using switching signals (+/- keys). It is activated via terminals or fieldbus. As long as a logical 1 is present at signal input "MOP raise" (setpoint higher), the internal numerator integrates the setpoint. You can set the integration time (time taken for the setpoint to increase) using parameter p1047. In the same way, you can decrease the setpoint using signal input "MOP lower". The deceleration ramp can be set using parameter p1048.
Configuration parameter p1030.0 = 1 (default setting = 0) enables non-volatile storage of the current motorized potentiometer value when powering down the drive unit. When powering-up the drive unit, the starting (initial) value of the motorized potentiometer is set to the last, actual value that was present when the drive unit was powered-down.

Precondition

The default setting for the motorized potentiometer was chosen during commissioning:

- STARTER (p1000): "Motorized potentiometer"
- AOP30 (p1000): "3: Motorized potentiometer"

Signal flow diagram

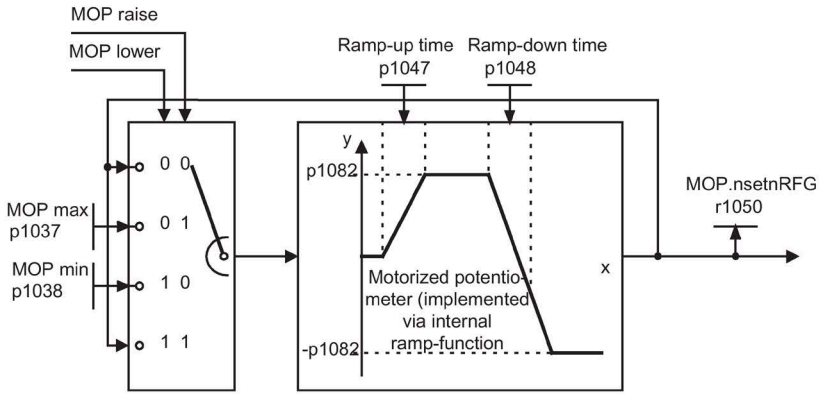

Figure 6-18 Signal flow diagram: Motorized potentiometer

Function diagram

FD 3020 Motorized potentiometer

Parameter

- p1030 Motorized potentiometer, configuration
- p1037 Motorized potentiometer, maximum speed
- p1038 Motorized potentiometer, minimum speed
- p1047 Motorized potentiometer, ramp-up time
- p1048 Motorized potentiometer, ramp-down time
- r1050 Motorized potentiometer, setpoint after the ramp-function generator

6.5.3 Fixed speed setpoints

Description

A total of 15 variable fixed speed setpoints are available.
The default setting specified for the setpoint sources during commissioning via STARTER or the operating panel makes three fixed speed setpoints available. They can be selected via terminals or fieldbus.

Precondition

The default setting for the fixed speed setpoints was chosen during commissioning:

- STARTER (p1000): "Fixed setpoint"
- AOP30 (p1000): "4: Fixed setpoint"

Signal flow diagram

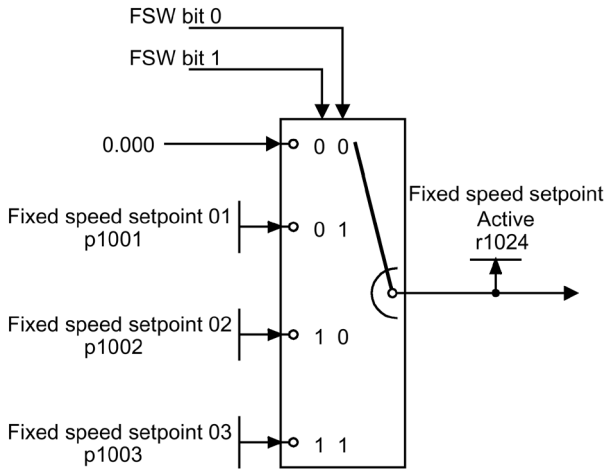

Figure 6-19 Signal flow diagram: Fixed speed setpoints

Function diagram

FP 3010 Fixed speed setpoints

Parameter

- p1001 Fixed speed setpoint 01
- p1002 Fixed speed setpoint 02
- p1003 Fixed speed setpoint 03
- r1024 Fixed speed setpoint effective

Note

Other fixed speed setpoints are available using p1004 to p1015. They can be selected using p1020 to p1023.

6.6 Control via the operator panel

6.6.1 Operator panel (AOP30) overview and menu structure

Description

The operator panel can be used for the following activities:

- Parameterization (commissioning)
- Monitoring status variables
- Controlling the drive
- Diagnosing faults and alarms

All the functions can be accessed via a menu.

Your starting point is the main menu, which you can always call up using the yellow MENU key:

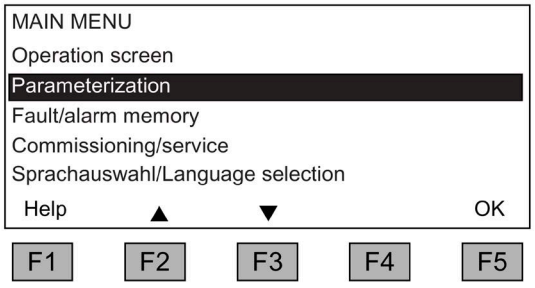

Dialog screen for the main menu:
It can be accessed at any time with the "MENU" key.

Press "F2" or "F3" to navigate through the menu options in the main menu.

Note

AOP reset

If the AOP no longer reacts, you can trigger an AOP reset by simultaneously pressing the key and OFF buttons (longer than two seconds) and then releasing the OFF button.

Menu structure of the operator panel

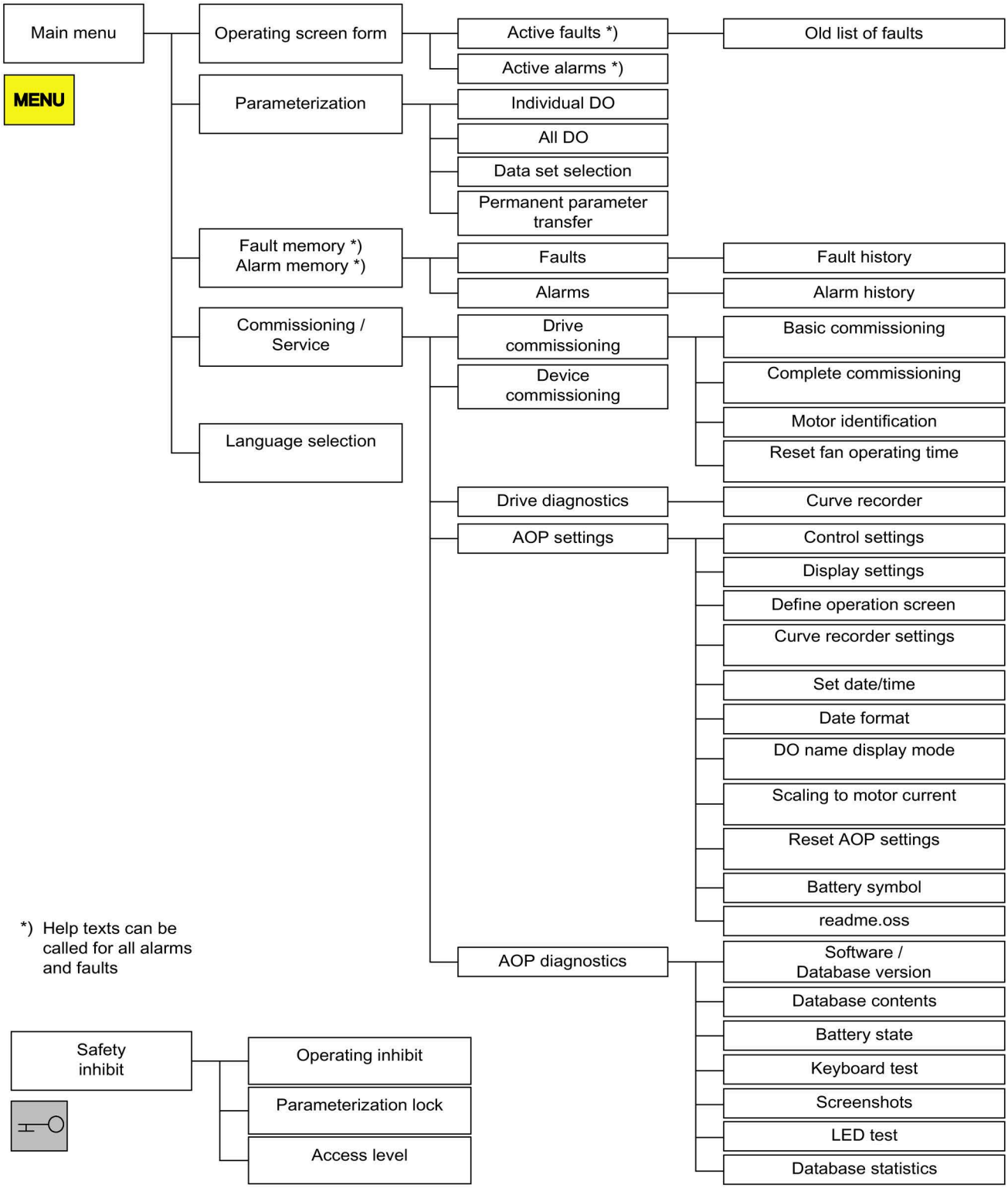

Figure 6-20 Menu structure of the operator panel

6.6.2 Menu: Operation screen

Description

The operation screen displays the most important status variables for the drive unit:

In the delivery condition, it displays the operating state of the drive, the direction of rotation, the time, as well as four drive variables (parameters) numerically and two in the form of a bar display for continuous monitoring.

There are two ways to reach the operation screen:

1. After the power supply has been switched on and the system has ramped up.
2. By pressing the MENU key and F5 "OK "

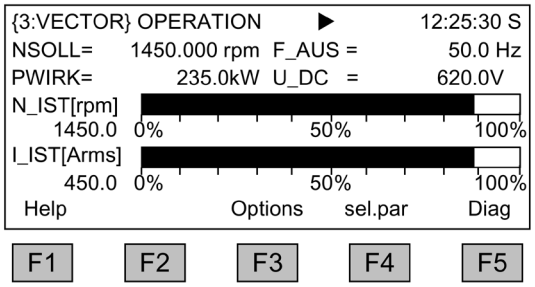

Figure 6-21 Operation screen

If a fault occurs, the system automatically displays the fault screen (see "Faults and alarms").

In LOCAL control mode, you can choose to enter the setpoint numerically (F2: setpoint).

With F3 "Extras", screen2 and CDS data set (see section CDS setting via AOP (Page 339)) can be selected.

The individual parameters of the operation screen can be selected using F4 "Sel. par." The corresponding parameter number of the short identifier is displayed using F1 "Help+" and a description of the parameter can be called up.

Settings

When you choose Commissioning / service –> AOP settings –> Define operation screen, you can adjust the display type and the values displayed as required (see "AOP settings").

6.6.3 Menu: Parameterization

You can adjust the device settings in the Parameterization menu.

The drive software is modular. The individual modules are called DOs ("drive objects").

The following DOs are available in the SINAMICS S150:

- CU: General parameters for the Control Unit
- A_INF Regulated infeed
- VECTOR: Drive control
- TM31: TM31 Terminal Module (option G60)
- TM150: TM150 temperature sensor module (option G51)

Parameters with identical functions may exist with the same parameter number in more than one DO (e.g. p0002).

The AOP30 is used for operating devices that comprise more than one drive (in this respect, a regulated infeed is also a "drive") so that attention is focused on one drive (i.e. the "current" drive). The switchover is made in the main menu. The corresponding function key is labeled "Drive."

This drive determines the following:

- Operation screen
- Fault and alarm displays
- The controller (ON, OFF, ...) of a drive

Depending on your requirements, you can choose between two AOP display types:

1. All parameters
   All the parameters present in the device are listed here. The DO to which the currently selected parameter belongs is displayed in curly brackets in the top left of the screen.
2. DO selection
   In this display, you can pre-select a DO Only the parameters for this DO are then listed. (The expert list display in STARTER only uses this DO view)

In both cases, the set access level governs which parameters are displayed. You can set the access level in the menu for inhibit functions, which can be called up using the key button.

The parameters for access levels 1 and 2 are sufficient for simple applications.

At access level 3 ("Expert"), you can change the structure of the function by interconnecting BICO parameters.

In the Data set selection menu, you can choose which of the data sets chosen is currently DISPLAYED on the operator panel.
Data set parameters are indicated by a "c", "d", "m", "e", or "p" between the parameter number and parameter designator.

When a data set parameter is changed, the data set selection dialog appears.

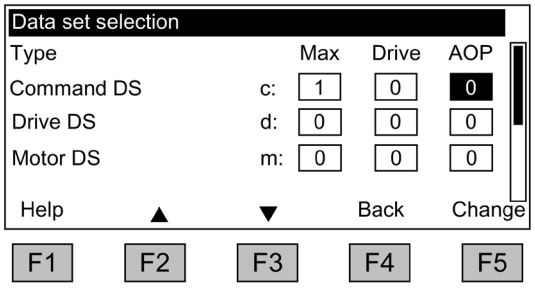

Figure 6-22 Data set selection

Explanation of the operator control dialog

- "Max" shows the maximum number of data sets parameterized (and thereby available for selection) in the drive.
- "Drive" indicates which data set is currently active in the drive.
- "AOP" indicates which particular data set is currently being displayed in the operator panel.

6.6.4 Menu: Fault/alarm memory

When you select the menu, a screen appears containing an overview of faults and alarms that are present.

For each drive object, the system indicates whether any faults or alarms are present. ("Fault" or "Alarm" appears next to the relevant drive object).

In the graphic below, you can see that at least one active fault/alarm is present for the "VECTOR" drive object. No faults/alarms are indicated for the other drive objects.

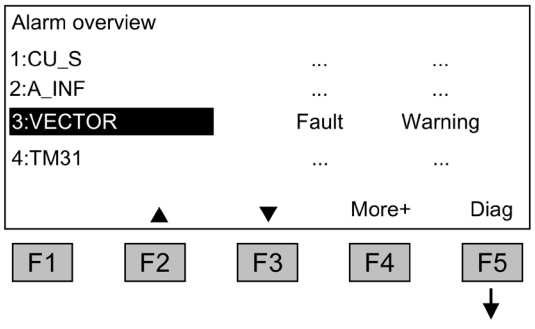

Fault/alarm memory

When you navigate to the line with active alarms/faults and then press the F5 <Diag> key, the system displays a screen in which you have to select the current or old alarms/faults.

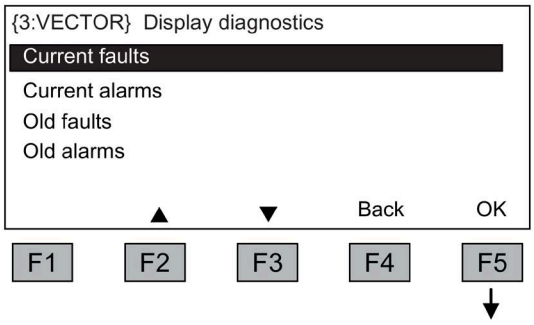

Display diagnosis

When you navigate to the required line and then press the F5 <OK> key, the corresponding faults/alarms are displayed.

The list of current faults is selected here as an example.

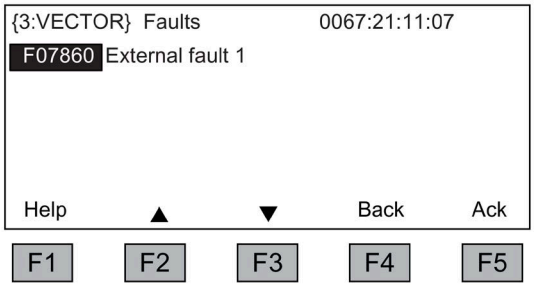

Display of current faults

A maximum of eight current faults are displayed along with their fault number and name of the fault.

To display additional help regarding the cause of the problem and how to solve it, choose F1 <Help>.

To acknowledge the faults, choose F5 <Ack.>. If a fault cannot be acknowledged, the fault remains.

6.6.5 Menu: Commissioning / service

6.6.5.1 Drive commissioning

This option enables you to re-commission the drive from the main menu.

Basic Commissioning

Only the basic commissioning parameters are queried and stored permanently.

Complete commissioning

Complete commissioning with motor and encoder data entry is carried out. Following this, key motor parameters are recalculated from the motor data. The parameter values calculated during previous commissioning are lost.

In a subsequent motor identification procedure, the calculated values are overwritten.

Motor identification

The selection screen for motor identification appears.

Reset fan operating time

The actual operating hours of the fan in the power unit is displayed.

After a fan replacement, the operating hours counter for monitoring the fan operating time must be reset.

6.6.5.2 Device commissioning

Device commissioning

In this menu, you can enter the device commissioning status directly. This is the only way that you can reset parameters to the factory setting for example.

6.6.5.3 Drive diagnostics

Curve recorder

The curve recorder provides a slow trace function, which monitors a signal trend.
A signal selected via a parameter is shown in the form of a curve.

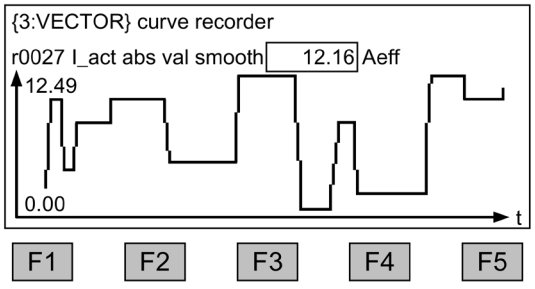

Figure 6-23 Curve recorder

The curve recorder-relevant settings are changed by pressing the F5 key or via the "Commissioning / Service – AOP settings - Curve recorder-relevant settings" menu.

The value of the parameter selected in the curve recorder-relevant settings is output on the display in addition to the curve and updated every 0.5 ... 24.5 seconds (parameterizable). With a slowly running time basis (as of 20 minutes/figure), the time basis value flashes in the header in the 1 s-cycle alternately with the text "slow X".

Assignment of the function keys F1 to F5 is not normally displayed so that the space can be fully utilized to display the curve. Pressing a function key shows the key assignments. If no further key is pressed within 5 seconds, the labeling will disappear again.

The curve can be scaled automatically or manually. This is selected with key F3 "scale+" - F2 "Auto/Manual" followed by confirmation with F5 "OK."

- **Auto**

  The scaling of the curve changes dynamically, it is oriented to the maximum value (for example, 12.49) and minimum value (for example, 0.00) visible in the display at the actual point in time. Scaling can be changed step-by-step by pressing buttons F2 and F3. If measured value noise is shown with an excessively high resolution as a result of the automatic scaling, then the resolution can be reduced in four steps by pressing button F2. As a result, the automatic scaling is deactivated. However, if the measured value leaves the display area, then this is extended. Automatic scaling can be reselected by pressing button F3.

- **Manually**

  After selecting manual scaling and confirmation with "OK", a window opens in which the maximum and minimum limits for scaling can be set.

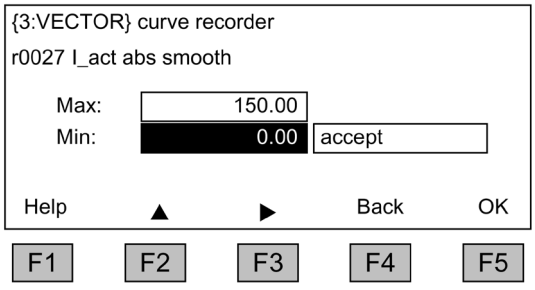

Figure 6-24 Curve recorder - manual scaling

After setting and applying the limits, you switch to the curve recorder and manual scaling is used.

If the current measured values are outside the displayable range, the range will automatically be extended.

Note

Changing the parameter for the curve recorder in manual scaling

When the parameter for the curve recorder is changed the following occurs with manual scaling:

- If the current parameter has lower values than the currently set scaling, the scaling will be retained.
- If the current parameter has higher values than the currently set scaling, the scaling will be adjusted automatically.

Help on the curve recorder can be opened with key F1.

The curve recorder is exited by pressing the MENU button.

Note

No recording of data

The values displayed in the recorder are not recorded and saved, they are only used for display until the screen form is exited.

6.6.5.4 AOP settings

Control settings

This defines the settings for the control keys in LOCAL mode (see "Operation / Control via the operator panel / Operation via the operator panel").

Display settings

In this menu, you set the lighting, brightness, and contrast for the display.

Define operation screen

In this menu, you can switch between five operation screens. You can set the parameters to be displayed.

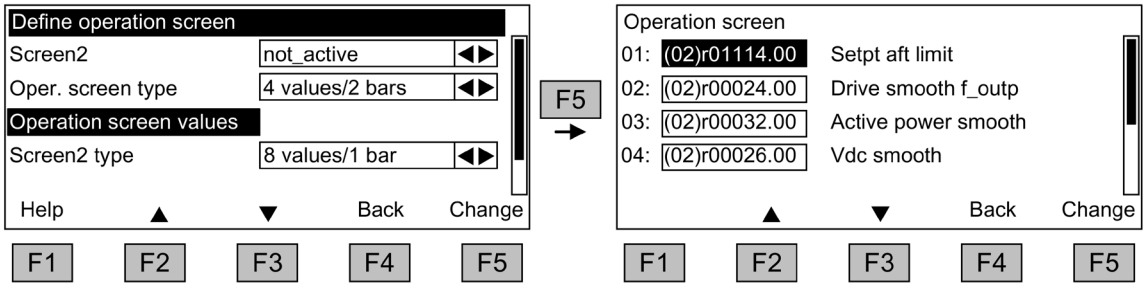

Figure 6-25 Define operation screen

The following screenshot shows how entries are assigned to the screen positions:

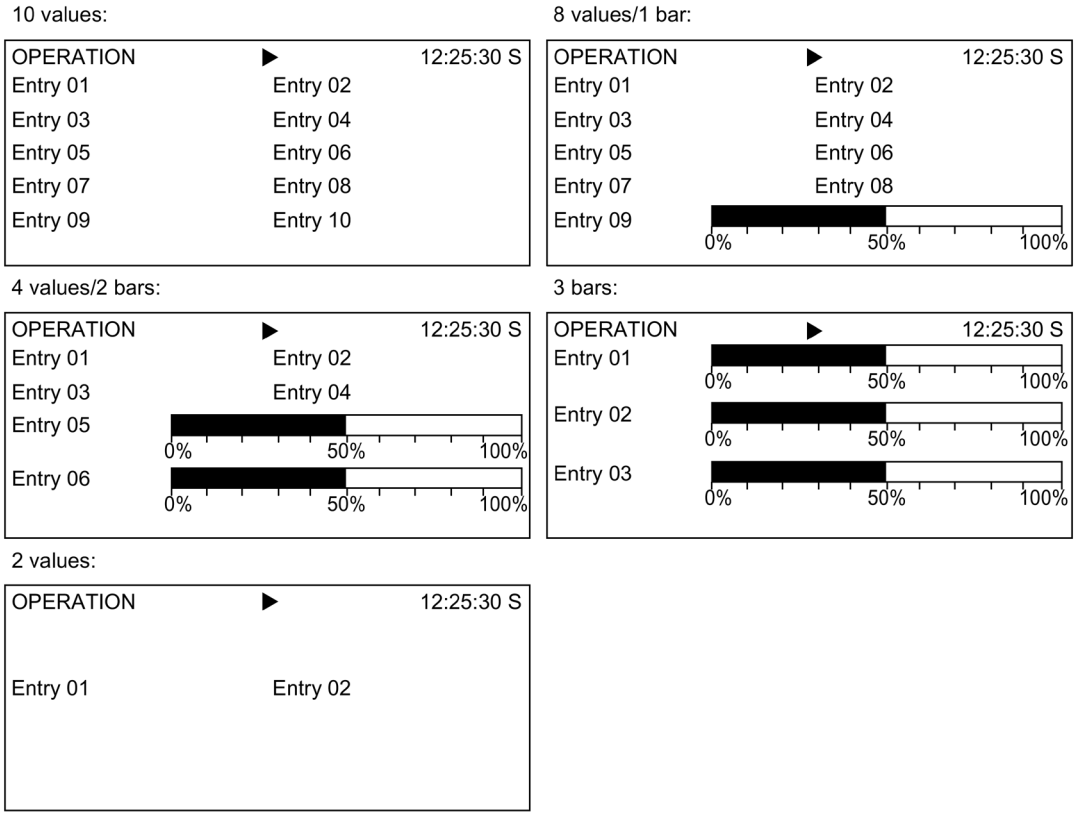

Figure 6-26 Layout of entries on the operation screen

Lists of signals for the operating screen form

The following tables list some of the main signals for the operation screen along with the associated reference variables and default settings for fast commissioning.

VECTOR object

Table 6- 5 List of signals for the operation screen - VECTOR object

Signal		Parameter	Short name	Unit	Scaling (100 %=...) See table below
Factory setting (entry no.)					
Speed setpoint upstream of ramp-function generator	(1)	r1114	NSETP	1/min	p2000
Output frequency	(2)	r0024	F_OUT	Hz	Reference frequency
Power smoothed	(3)	r0032	PACTV	kW	r2004
DC link voltage smoothed	(4)	r0026	U_DC	V	p2001
Actual speed value smoothed	(5)	r0021	N_ACT	1/min	p2000
Absolute actual current, smoothed	(6)	r0027	I_IST	A	p2002
Motor temperature	(7)	r0035 [1)]	T_MOT	°C	p2006
Converter temperature	(8)	r0037	T_LT	°C	p2006
Actual torque smoothed	(9)	r0031	M_ACT	Nm	p2003
Converter output voltage smoothed	(10)	r0025	C_OUT	V	p2001
For diagnostic purposes					
Speed setpoint smoothed		r0020	NSETP	1/min	p2000
Control factor smoothed		r0028	AUSST	%	Reference modulation depth
Field-producing current component		r0029	IDACT	A	p2002
Torque-producing current component		r0030	IQACT	A	p2002
Converter overload Degree of thermal overload		r0036	LTI2T	%	100 % = Shutdown
Speed actual value motor encoder		r0061	N_ACT	1/min	p2000
Speed setpoint after the filter		r0062	NSETP	1/min	p2000
Actual speed smoothed		r0063	N_ACT	1/min	p2000
Control deviation		r0064	NDIFF	1/min	p2000
Slip frequency		r0065	FSCHL	Hz	Reference frequency
Output frequency		r0066	F_OUT	Hz	Reference frequency
Output voltage		r0072	UACT	V	p2001
Control factor		r0074	AUSST	%	Reference modulation depth
Torque-generating actual current		r0078	IQACT	A	p2002
Actual torque value		r0080	M_ACT	Nm	p2003
For further diagnostic purposes					
Fixed speed setpoint effective		r1024		1/min	p2000
Active motorized potentiometer setpoint		r1050		1/min	p2000
Resulting speed setpoint		r1119	NSETP	1/min	p2000
Speed controller output		r1508	NREGY	Nm	p2003
I component of speed controller		r1482	NREGI	Nm	p2003
PROFIBUS setpoint		r2050	PBSOL	1/min	p2000

[1)] If a temperature sensor has not been installed, a value of –200 °C is displayed.

Normalization for VECTOR object

Table 6- 6 Normalization for VECTOR object

Size	Scaling parameter	Default for quick commissioning
Reference speed	100% = p2000	p2000 = Maximum speed (p1082)
Reference voltage	100% = p2001	p2001 = 1000 V
Reference current	100% = p2002	p2002 = Current limit (p0640)
Reference torque	100% = p2003	p2003 = 2 x rated motor torque
Reference power	100% = r2004	r2004 = (p2003 x p2000 x π) / 30
Reference frequency	100 % = p2000 / 60	
Reference modulation depth	100 % = Maximum output voltage without overload	
Reference flux	100 % = Rated motor flux	
Reference temperature	100% = p2006	p2006 = 100°C

Object A_INF

Table 6- 7 List of signals for the operation screen - object A_INF

Signal		Parameter	Short name	Unit	Scaling (100 %=...) See table below
DC link voltage smoothed	(1)	r0026	U_DC	V	p2001
Input voltage	(2)	r0025	U_IN	V	p2001
Active current	(3)	r0030	IACTV	A	p2002
Line frequency	(4)	r0024	FLINE	Hz	p2000
Active power	(5)	r0032	PACTV	kW	r2004
Actual value of current	(6)	r0027	I_IST	A	p2002
Temperature of power unit	(7)	r0037	T_LT	°C	p2006
Power factor, smoothed	(8)	r0032	PACTV	kW	r2004
Modulation depth, smoothed	(9)	r0028	AUSST	%	Reference modulation depth
Reactive current component smoothed	(10)	r0029	IREAC	A	p2002

Normalization for object A_INF

Table 6- 8 Normalization for object A_INF

Variable	Scaling parameter	Default for quick commissioning
Reference frequency	100 % = p2000	p2000 = p0211
Reference voltage	100 % = p2001	p2001 = r0206/r0207
Reference current	100 % = p2002	p2002 = r0207
Reference power	100 % = r2004	r2004 = r0206
Reference modulation depth	100 % = Maximum output voltage without overload	
Reference temperature	100% = p2006	p2006 = 100°C

TM31 object

Table 6- 9 List of signals for the operation screen - TM31 object

Signal	Parameters	Short name	Unit	Scaling (100% = ...)
Analog input 0 [V, mA]	r4052[0]	AI_UI	V, mA	R: 100 V / mA: 100 mA
Analog input 1 [V, mA]	r4052[1]	AI_UI	V, mA	R: 100 V / mA: 100 mA
Analog input 0, scaled	r4055[0]	AI_%	%	as set in p200x
Analog input 1, scaled	r4055[1]	AI_%	%	as set in p200x

Curve recorder settings

In this menu, the following settings can be made:

Parameter selection

You can select here the parameter whose signal is to be displayed in the form of a trend curve in the curve recorder.

Interpolation (factory setting: No), serves for the better display of rapidly changing quantities.

- **No:** Only the measured values are displayed as points, without a connecting line between the points.
- **1:** The measured values are connected with a vertical line.
- **2:** The measured values are connected with a line, offset at the center.

Time base (factory setting: 2 minutes/screen)

The rate of the signal acquisition in minutes per screen is set. The value can be changed in integer multiples of 2. If an odd value is entered, the value will be rounded up. After changing the time basis the recording is started again.

Background recording (factory setting: No)

- **YES:** Values are still recorded, even if the display screen is exited. When the screen is entered again, the recorded prehistory is displayed.
- **NO:** The recording is stopped when the curve recorder is exited.

Y scale mode (factory setting: Auto), specifies the representation of the trend

- **Auto:** Scaling is done automatically (making the best possible use of the display height).
- **Manual:** Scaling is done manually by entering the range limits MIN/MAX. If, in this mode, values that are outside the defined window occur, the limit is automatically adapted for the display so that actual measured values can always be recorded.

Setting the date/time (for date stamping of error messages)

In this menu, you set the date and time.

You can also set whether and/or how the AOP and drive unit are to be synchronized. Synchronization of the AOP with the drive enables error messages to be date- and time-stamped.

Note

Display format for the time

The drive unit displays the time in parameter r3102 in the UTC format (days/milliseconds since 1970-01-01).

Under "Additional settings", settings for synchronization can be made:

Synchronization (factory setting: None)

- **None**
  The times for the AOP and drive unit are not synchronized.
- **AOP -> Drive**
  - If you activate this option, the AOP and drive unit are synchronized immediately whereby the current AOP time is transferred to the drive unit.
  - The current AOP time is transferred to the drive unit every time the AOP is started.
  - Depending on the set synchronization interval, the current AOP time is transferred to the drive unit.

  Note

  Flashing "S"

  If the AOP detects a difference between RAM and ROM during synchronization to the drive unit, this is indicated by a flashing "S" at the top right in the display or, if operator input and/or parameter assignment has been disabled, by a flashing key symbol.

- **Drive -> AOP**
  - If you activate this option, the AOP and drive unit are synchronized immediately whereby the current drive unit time is transferred to the AOP.
  - The current drive unit time is transferred to the AOP every time the AOP is started.
  - Depending on the set synchronization interval, the current drive unit time is transferred to the AOP.

  Note

  Time-of-day master

  The time in the drive must be set by a clock master (e.g. SIMATIC).

Synchronization interval

The interval for time synchronization is set from 1 hour (factory setting) to 99 hours.

For the interval, the time in the AOP from the time of the last change of the interval is decisive.

Daylight saving (factory setting: No)

- **No**
  The time does not automatically change over to daylight-saving time.
- **Yes**
  Selection is only possible if synchronization is set to "None" or "AOP -> Drive".
  The time is then automatically set to summer or winter time.
  After the changeover - for synchronization "AOP -> Drive" - synchronization is immediately carried out, irrespective of the synchronization interval set.

Changes to the synchronization must be saved with "Save".

Date format

In this menu, the date format can be set:

- **DD.MM.YYYY**: European date format
- **MM/DD/YYYY**: North American date format

DO name display mode

In this menu, you can toggle the display of the DO-name between the standard abbreviation (e.g., VECTOR) and a DO-name of your choice (e.g. motor_1).

User-defined DO name (factory setting: No)

- **Yes:** The "User-defined DO-name" stored in parameter p0199 is displayed instead of the standard DO abbreviation.
- **No:** The standard DO abbreviation is displayed.

Scaling to motor current

In this menu, the reference variable for the bar-type display of parameter r0027 (absolute actual current value smoothed) can be changed over in the operating screen forms.

Scaling to motor current (factory setting: No)

- **Yes:** The bar display of parameter r0027 in the operating screen form is displayed with reference to parameter p0305 (rated motor current).
- **No:** The bar display of parameter r0027 in the operating screen form is displayed with reference to parameter p2002 (reference current).

Reset AOP settings

When you choose this menu option, the AOP factory settings for the following are restored:

- Language
- Display (brightness, contrast)
- Operating screen
- Control settings

Note

Restoring the factory setting

When you reset parameters, all settings that are different to the factory settings are reset immediately. This may cause the cabinet unit to switch to a different, unwanted operational status.

For this reason, you should always take great care when resetting parameters.

Battery symbol

In this menu, the battery symbol can be activated so that it is displayed in the operating screen form. When the display is activated, then the battery symbol is shown instead of the time of day seconds display. It displays the battery voltage in 20 % steps. If the display was received in the last 20 %, then the battery symbol flashes in order to indicate that the battery must be replaced.

Battery symbol (factory setting: NO)

- **Yes:** The battery symbol is shown at the top right of the operating screen form - at the time of day seconds display.
- **No:** The battery symbol is not displayed in the operating screen form.

readme.oss

Notes are displayed in this menu that describe complying with regulations when using any embedded OSS software components.

6.6.5.5 AOP diagnostics

Software/database version

You can use this menu to display the firmware and database versions.

The database version must be compatible with the drive software status (you can check this in parameter r0018).

Database contents

For service purposes, the contents of the database are displayed in the screen form.

Battery status

In this menu, you can display the battery voltage numerically (in Volts) or as a bar display. The battery ensures that the data in the database and the current time are retained.

When the battery voltage is represented as a percentage, a battery voltage of ≤ 2.30 V is equal to 0%, and a voltage of ≥ 3 V to 100%.

The data is secure up to a battery voltage of 2.30 V.

- If the battery voltage is ≤ 2.45 V, the message "Battery weak - replace soon" is displayed in the status bar.
- If the battery voltage is ≤ 2.30 V, the system displays the following message: "Battery defect - replace immed."
- If the time and/or database is/are unavailable due to an undervoltage condition after being in a switched off state for a longer period of time, the loss is determined using a CRC check when the system is switched on again. This triggers a message instructing the user to replace the battery and then load the database and/or set the time.

For instructions on how to change the battery, see "Maintenance and servicing".

Keyboard test

In this screen, you can check whether the keys are functioning properly. Keys that you press are represented on a symbolic keyboard on the display. You can press the keys in any order. You cannot exit the screen (F4 – "back") until you have pressed each key at least once.

Note

Exit keyboard test

Alternatively, you can exit the keyboard test screen by pressing any key and holding it down.

Screenshots

A screenshot is created by simultaneously pressing keys "1" and "+/-" - and then the display flashes 2 times, one after the other. A maximum of 8 screenshots can be managed.

The list of the saved screenshots is displayed in the "Screenshots" menu item.

The screenshot is selected from the list and is displayed by pressing F5.

While the screenshot is being displayed, the identifier and the time stamp are displayed flashing in the title line every 5 seconds.

By pressing any function key F1 ... F5, the function key assignment is displayed for 5 seconds.

- The display is exited by pressing F4 and the list of screenshots is redisplayed.
- By pressing the F5 key once and then pressing F5 "Clear" again to confirm, the displayed screenshot will be deleted and the list of screenshots will be displayed again.

To clear all of the screenshots, in the list of screenshots, press F5 for longer than 1 second - and confirm the following prompt with "Yes".

If there are gaps in the list of screenshots, then they are populated with new screenshots from the top to the bottom. When the list is full, then the oldest chronological entry in the list is overwritten.

Note

Battery buffering

The screenshots are saved to the memory, buffered by a battery - and are also available after the power supply has been switched-off and switched-on again.

When the AOP30 is switched off and the battery is too weak - or when changing the batteries - a buffer time of approximately 30 minutes applies.

LED test

In this screen, you can check that the four LEDs are functioning properly.

Database statistics

For service purposes, the database statistics are displayed in the screen form.

6.6.6 Sprachauswahl/Language selection

The operator panel downloads the texts for the different languages from the drive.

You can change the language of the operator panel via the "Sprachauswahl/Language selection" menu.

Note

Additional languages for the display

Languages in addition to the current available languages in the display are available on request.

6.6.7 Operation via the operator panel (LOCAL mode)

You activate the control keys by switching to LOCAL mode. If the green LED in the LOCAL/REMOTE key does not light up, the key is not active.

Note

OFF in REMOTE

If the "OFF in REMOTE" function is activated, the LED in the LOCAL-REMOTE key flashes.

For LOCAL master control, all of the supplementary setpoints are deactivated.

After the master control has been transferred to the operator panel, the BICO interconnections at bit 0 to bit 10 of the control word of the sequence control are not effective (refer to function diagram 2501).

Note

Message "Other device has master control"

If STARTER has master control, then when pressing the LOCAL-REMOTE button, the "Other device has master control" message is displayed, and the master control transfer is rejected.

6.6.7.1 LOCAL/REMOTE key

Activating the LOCAL mode: Press the LOCAL key

LOCAL mode: LED lights up

REMOTE mode: LED does not light up: the ON, OFF, JOG, direction reversal, INCREASE, DECREASE keys are not active.

Settings: MENU – Commissioning / Service – AOP Settings – Control Settings

Save LOCAL mode (factory setting: yes)

- **Yes**: The "LOCAL" or "REMOTE" operating state is saved when the supply voltage is switched off, and restored when the supply voltage is switched back on.
- **No**: "LOCAL" or "REMOTE" operating mode is not saved. "REMOTE" is active when the supply voltage is switched back on.

OFF in REMOTE (factory setting: No)

- **Yes**: The OFF key functions in REMOTE mode even if the drive is being controlled by external sources (fieldbus, customer terminal block, NAMUR terminal block).
  WARNING This function is not an EMERGENCY STOP function!
- **No**: The OFF key only functions in LOCAL mode.

LOCAL/REMOTE also during operation (factory setting: No)

- **Yes**: You can switch between LOCAL and REMOTE when the drive is switched on (motor is running).
- **No**: Before the system switches to LOCAL, a check is carried out to determine whether the drive is in the operational status. If it is, switchover is prevented and fault message "LOCAL mode during operation not possible" is output. Before the system switches to REMOTE, the drive is switched off and the setpoint is set to 0.

6.6.7.2 ON key / OFF key

ON key: always active in the LOCAL mode when the operator input inhibit is deactivated.

OFF key: in the factory setting, acts as OFF1 = ramp-down along the deceleration ramp (p1121); when n = 0: Power disconnected (only if there is a main contactor)
The OFF key is active in the LOCAL mode and when the "OFF in REMOTE" function is active.

Settings: MENU – Commissioning / Service – AOP Settings – Control Settings

Red OFF key acts as: (Factory setting: OFF1)

- **OFF1**: Ramp-down along the down ramp (p1121)
- **OFF2**: Immediate pulse inhibit, motor coasts down
- **OFF3**: Ramp-down along the quick stop ramp (p1135)

6.6.7.3 Switching between clockwise and counter-clockwise rotation

Settings: MENU – Commissioning / Service – AOP Settings – Control Settings

Switching between CCW/CW (factory setting: no)

- **Yes**: Switching between CW/CCW rotation using the CW/CCW key possible in the LOCAL mode.
- **No**: The CW/CCW key has no effect in the LOCAL mode.

For safety reasons, the CW/CCW key is disabled in the factory setting (pumps and fans must normally only be operated in one direction).

In the "Operation" state in the LOCAL mode, the current direction of rotation is indicated by an arrow next to the operating state.

Note

Activation of CCW/CW changeover

You have to make additional settings when switching between CW/CCW rotation.

6.6.7.4 Jog

Settings: MENU – Commissioning/Service – AOP settings – Control settings

JOG key active (factory setting: No)

- **Yes**: The jog key is effective in the LOCAL mode in the state "ready to power-up" (not in "operation"). The speed that is set in parameter p1058 is approached.
- **No**: The JOG key has no effect in the LOCAL mode

6.6.7.5 Increase setpoint / decrease setpoint

You can use the INCREASE and DECREASE keys to enter the setpoint with a resolution of 1 % of the maximum speed.

You can also enter the setpoint numerically. To do so, press F2 in the operation screen. The system displays an field for entering the required speed. Enter the required value using the numeric keypad. Press F5 "OK" to confirm the setpoint.

When you enter values numerically, you can enter any speed between the minimum speed (p1080) and the maximum speed (p1082).

Unipolar setpoints are entered in the LOCAL mode. You can change the direction of rotation by pressing the key that allows you to switch between CW/CCW rotation.

- CW rotation and "INCREASE key" mean:
  The displayed setpoint is positive and the output frequency is increased.
- CCW rotation and "INCREASE key" mean:
  The displayed setpoint is negative and the output frequency is increased.

6.6.7.6 AOP setpoint

Settings: MENU – Commissioning / Service – AOP Settings – Control Settings

Save AOP setpoint (factory setting: no)

- **Yes**: In the LOCAL mode, the last setpoint (once you have released the INCREASE or DECREASE key or confirmed a numeric entry) is saved.
  The next time you switch the system on in the LOCAL mode, the saved value is selected. This is also the case if you switched to REMOTE in the meantime or the power supply was switched off.
  When the system is switched from REMOTE to LOCAL mode while the drive is switched on (motor is running), the actual value that was last present is set as the output value for the motorized potentiometer setpoint and saved.
  If the system is switched from the REMOTE to the LOCAL mode while the drive is switched off, the AOP setpoint that was last saved is used.
- **No**: When switching on in the LOCAL mode, the speed is always set to the value entered under "AOP starting setpoint". When the system is switched from the REMOTE to LOCAL mode while the drive is switched on (motor is running), the actual value that was last present is set as the output value for the AOP setpoint.

AOP setpoint ramp-up time (factory setting: 10 s)

AOP setpoint ramp-down time (factory setting: 10 s)

- **Recommendation**: set as ramp-up/ramp-down time (p1120 / p1121).
  Changing the ramp-up/ramp-down times does not affect the settings for parameters p1120 and p1121 because this is an AOP-specific setting.

AOP starting setpoint (factory setting: 0.000 rpm)

The AOP starting setpoint is the speed setpoint which is active when the drive is switched on (with AOP30 - "ON" key). This setpoint is valid on condition that the system setting "Save setpoint" is set to "NO".

Note

Internal ramp-function generator

The internal drive ramp-function generator is always active.

6.6.7.7 Lock AOP LOCAL mode

Settings: MENU – Commissioning/Service – AOP settings – Control settings

Save AOP local mode (factory setting: no)

- **Yes**: Deactivates the "Control via operator panel" function, thereby disabling the LOCAL/REMOTE key.
- **No**: Activates the LOCAL/REMOTE key.

Note

Lock LOCAL

LOCAL functionality can also be inhibited on the drive by means of the p0806 parameter (BI: Inhibit master control).

6.6.7.8 Acknowledge error from the AOP

Settings: MENU – Commissioning / Service – AOP Settings – Control Settings

Acknowledging faults at the AOP (factory setting: Yes)

- **Yes**: Faults can be acknowledged via the AOP.
- **No**: Faults cannot be acknowledged via the AOP.

6.6.7.9 CDS setting via AOP

Settings: MENU – Commissioning/Service – AOP settings – Control settings

CDS changeover via AOP (factory setting: No)

- **Yes**: In the LOCAL mode, in the operating screen form the active CDS can the changed by one. This is helpful, if operation via an AOP would not be possible due to the fact that a standard telegram is active.
  When CDS0 or 2 is active, "CDS+1" switches to CDS1 or CDS3.
  When CDS1 or 3 is active, "CDS-1" switches to CDS0 or CDS2.
- **No**: In the LOCAL mode, in the operating screen form the active CDS cannot be changed by one.

6.6.7.10 Operator input inhibit / parameterization inhibit

To prevent users from accidentally actuating the control keys and changing parameters, you can activate an operator input / parameters disable using a key pushbutton. Two key icons appear in the top right of the display when these inhibit functions are enabled.

Table 6- 10 Display of operator input/parameters disable

Inhibit type	Online operation	Offline operation
No inhibit		
Operator input inhibit		
Parameters disable		
Operator input inhibit + parameters disable		

Settings

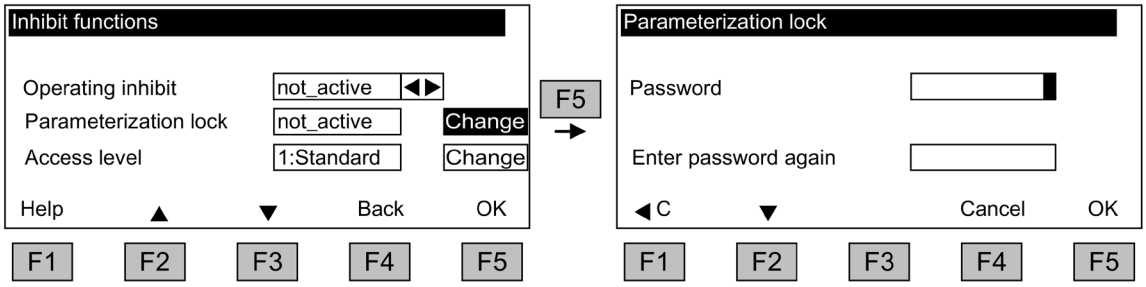

Figure 6-27 Set inhibit functions

The "Operator input inhibit" setting can be changed directly via <F5> "Change" once you have selected the selection field.

When "Parameterization inhibit" is activated, you have to enter a numeric password (repeat this entry). You must also enter this password when deactivating "Parameterization inhibit".

Operator input inhibit (factory setting: not active)

- **Active**: The parameters can still be viewed, but a parameter value cannot be saved (message: "Note: operator input inhibit active"). The OFF key (red) is enabled. The LOCAL, REMOTE, ON (green), JOG, CW/CCW, INCREASE, and DECREASE keys are disabled.

Parameterization inhibit (factory setting: not active)

- **Active**: Parameters cannot be changed unless a password is entered. The parameterization process is the same as with the operator input inhibit. If you try and change parameters, the message "Note: Parameterization inhibit active" is displayed. All the control keys can, however, still be actuated.

Access level (factory setting: Expert):

The different parameters required for this complex application are filtered so that they can be displayed as clearly as possible. You select them according to the access level.

An expert level, which must only be used by expert personnel, is required for certain actions.

Note

Copy from RAM to ROM

When the operator input inhibit or parameterization inhibit is activated, a "Copy from RAM to ROM" is automatically executed to back the parameter settings up in non-volatile memory on the memory card.

6.6.8 Faults and alarms

Indicating faults and alarms

If a fault occurs, the drive displays the fault and/or alarm on the operator panel. Faults are indicated by the red "FAULT" LED and a fault screen is automatically displayed. You can use the F1 Help function to call up information about the cause of the fault and how to remedy it. You can use F5 Ack. to acknowledge a stored fault.

Alarms are indicated by means of the yellow "ALARM" LED. The system also displays a note in the status bar providing information on the cause.

What is a fault?

A fault is a message from the drive indicating an error or other exceptional (unwanted) status that causes the drive to shutdown. This could be caused by a fault within the converter or an external fault triggered, for example, by the winding temperature monitor for the motor. The faults are displayed and can be reported to a higher-level control system via PROFIBUS. In the factory default setting, the message "converter fault" is also sent to a relay output. Once you have rectified the cause of the fault, you have to acknowledge the fault message.

What is an alarm?

An alarm is the response to a fault condition identified by the drive. It does not result in the drive being switched off and does not have to be acknowledged. Alarms are "self acknowledging", that is, they are reset automatically when the cause of the alarm has been eliminated.

Fault and alarm displays

Every fault and alarm is entered in the fault/alarm buffer along with time the error occurred. The time stamp refers to the system time (r2114).

You can call up an overview screen that displays the current status of faults and/or alarms for every drive object in the system by choosing MENU – Fault memory / alarm memory.

A context menu featuring the "Back" and "Quit" options appears when you press F4 "Next". The function required can be selected using F2 and F3 and executed by pressing F5 "OK". The "Acknowledge" function sends an acknowledgement signal to each drive object. The red FAULT LED extinguishes once all the faults have been acknowledged.

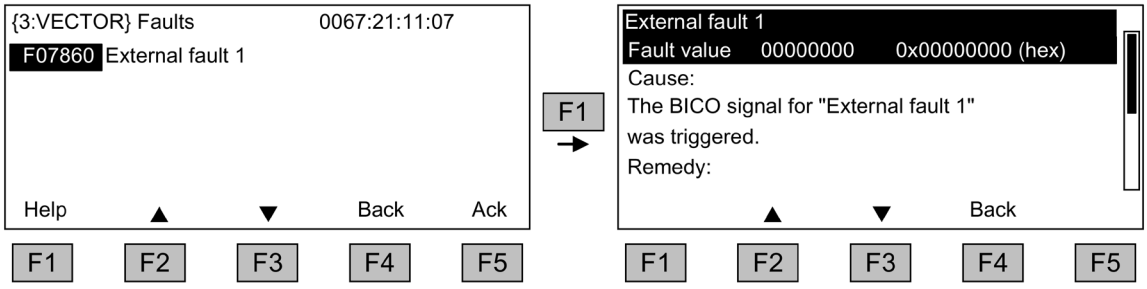

Figure 6-28 Fault screen

You can use F5 Ack. to acknowledge a stored fault.

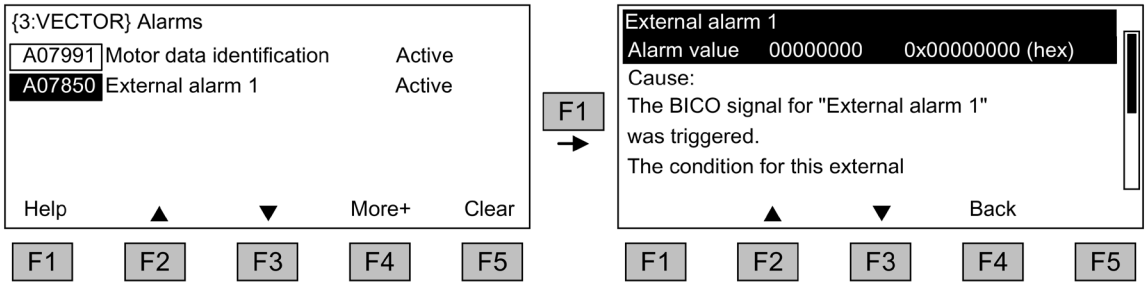

Figure 6-29 Alarm screen

Alarms that are no longer active are removed from the alarm memory with F5 Clear.

6.6.9 Saving the parameters permanently

Description

If parameters are changed using the operator panel (confirm with OK in the Parameter editor), the new values are initially stored in the volatile memory (RAM) of the drive. An "S" flashes in the top right of the AOP display until they are saved to a permanent memory. This indicates that at least 1 parameter has been changed and not yet stored permanently.

Two methods are available for permanently saving parameters that have been changed:

- To store the parameters permanently, choose <MENU> <Parameterization> <OK> <Permanent parameter transfer>.
- When confirming a parameter setting with OK, press the OK key for more than 1 s. The system displays a message asking you whether the setting is to be saved in the EEPROM. If you press "Yes", the system saves the setting in the EEPROM. If you press "No", the setting is not saved permanently and the "S" starts flashing to indicate this fact.

For both options, **all** changes that have not yet been saved permanently are stored in the EEPROM.

6.6.10 Parameterization errors

If a fault occurs when reading or writing parameters, a popup window containing the cause of the problem is displayed.

The system displays:

Parameter write error (d)pxxxx.yy:0xnn

and a plain-text explanation of the type of parameterization error.

6.7 Communication according to PROFIdrive

6.7.1 General information

PROFIdrive is the PROFIBUS and PROFINET profile for drive technology with a wide range of applications in production and process automation systems.

PROFIdrive is independent of the bus system used (PROFIBUS, PROFINET).

Note

PROFIdrive for drive technology is described in the following document:

- PROFIdrive Profile Drive Technology
  PROFIBUS User Organization e. V.
  Haid-und-Neu-Strasse 7, D-76131 Karlsruhe
  http://www.profibus.com
- IEC 61800-7

PROFIdrive device classes

Table 6- 11 PROFIdrive device classes

PROFIdrive	PROFIBUS DP	PROFINET
Peripheral device (P device)	DP slave	IO Device
Motion controller (higher-level controller or host of the automation system)	Class 1 DP master	IO Controller
Supervisor (engineering station)	Class 2 DP master	IO Supervisor

- Drive unit (PROFIBUS: Slave, PROFINET IO: IO Device)

  Example: CU320-2 Control Unit
- Controller (PROFIBUS: Master Class 1, PROFINET IO: IO controller)

  A controller is typically a higher-level control in which the automation program runs.

  Example: SIMATIC S7 and SIMOTION
- Supervisor (PROFIBUS: Master Class 2, PROFINET IO: IO Supervisor)

  Devices for configuring, commissioning, operator control and monitoring while the bus is in operation and devices which only exchange non-cyclic data with drive units and controllers.

  Examples: Programming devices, operator control and monitoring devices

Controllers, supervisor and drive units

Table 6- 12 Properties of the Controller, Supervisor, and Drive Unit

Properties	Controller	Supervisor	Drive unit
As bus node	Active		Passive
Sending messages	Permitted without external request		Only possible on request by the controller
Receiving messages	Possible without any restrictions		Only receive and acknowledge permitted

Note

Consistent naming conventions

For reasons of consistency, the terms "device", "controller", and "supervisor" are used below. The terms "slave" and "master" are only applied in the PROFIBUS chapter and are still use there.

Communication types

4 communication types are defined in the PROFIdrive profile:

- Cyclic data exchange via a cyclic data channel
  Motion control systems require cyclically updated data in operation for open-loop and closed-loop control tasks. This data must be sent to the drive units in the form of setpoints or transmitted from the drive units in the form of actual values, via the communications system. Transfer of this data is usually time-critical.
- Acyclic data exchange via an acyclic data channel
  An acyclic parameter channel for exchanging parameters between the control/supervisor and drive units is additionally available. Access to this data is not time-critical.
- Alarm channel
  Alarms are output on an event-driven basis, and show the occurrence and expiry of error states.
- Isochronous mode
  - Cyclic data exchange in a fixed time grid
  - The controller and device are synchronized.

Interface IF1 and IF2

The Control Unit can communicate via two different interfaces (IF1 and IF2).

Table 6- 13 Properties of IF1 and IF2

	IF1	IF2
PROFIdrive and SIEMENS telegram	x	-
Free telegram	x	x
Isochronous mode	x	x
Drive object types	All	All
Can be used for	PROFINET IO PROFIBUS DP SINAMICS Link PN Gate Ethernet/IP	PROFINET IO PROFIBUS DP CANopen SINAMICS Link PN Gate Ethernet/IP
Cyclic operation	x	x
PROFIsafe	x	x

Note

For additional information on interfaces IF1 and IF2, see Chapter "Parallel operation of communication interfaces".

6.7.2 Application classes

Description

There are different application classes for PROFIdrive according to the scope and type of the application processes. PROFIdrive features a total of 6 application classes, the 3 most important are considered here:

- Class 1 (AK1):

  The drive is controlled using a speed setpoint via PROFIBUS/PROFINET. The complete closed-loop speed control is realized in the drive itself.
  Typical application examples include simple frequency converters for controlling pumps and fans.

- Class 3 (AK3):

  In addition to the speed control, the drive also includes a positioning control, which means that it operates as an autonomous single-axis positioning drive while the higher-level technological processes are performed in the control system. Positioning requests are transferred to the drive controller via PROFINET (or PROFIBUS) and started.

- Class 4 (AK4):

  This PROFIdrive application class defines a speed setpoint interface where the closed-loop speed control is executed in the drive and the closed-loop position control in the control system. This is required for robotic and machine tool applications with coordinated motion sequences distributed across several drives.

  Motion control is primarily implemented using a central numerical controller (NC). The position control loop is closed via the bus, i.e. the communication between the controller and the drive must be isochronous.

Selection of telegrams as a function of the application class

The telegrams listed in the table below can be used in the following application classes:

Table 6- 14 Selection of telegrams as a function of the application class

Telegram (p0922 = x)	Description	Class 1	Class 3	Class 4
1	Speed setpoint, 16 bit	x	-	-
2	Speed setpoint, 32 bit	x	-	-
3	Speed setpoint, 32 bit with 1 position encoder	x	-	x
4	Speed setpoint, 32 bit with 2 position encoders	x	-	x
5	Speed setpoint, 32 bit with 1 position encoder and Dynamic Servo Control	-	-	x
6	Speed setpoint, 32 bit with 2 position encoders and Dynamic Servo Control	-	-	x
7	Basic positioner with selection of the traversing block	-	x	-
9	Basic positioner with direct setpoint input (MDI)	-	x	-
20	Speed setpoint, 16 bit VIK-NAMUR	x	-	-
81	Standard encoder	-	-	-
82	Standard encoder with speed actual value 16 bit	-	-	-
83	Standard encoder with speed actual value 32 bit	-	-	-
102	Speed setpoint, 32 bit with 1 position encoder and torque reduction	x	-	x
103	Speed setpoint, 32 bit with 2 position encoders and torque reduction	x	-	x
105	Speed setpoint, 32 bit with 1 position encoder, torque reduction and Dynamic Servo Control	-	-	x
106	Speed setpoint, 32 bit with 2 position encoders, torque reduction and Dynamic Servo Control	-	-	x
110	Basic positioner with direct setpoint input (MDI), override and position actual value	-	x	-
111	Basic positioner in the MDI mode	-	x	-
116	Speed setpoint, 32 bit with 2 position encoders, torque reduction, DSC and additional actual values	-	-	x
118	Speed setpoint, 32 bit with 2 position encoders, torque reduction, DSC, additional actual values and 2 external encoders	-	-	x
125	Dynamic Servo Control with torque precontrol, 1 position encoder (encoder 1)	-	-	x
126	Dynamic Servo Control with torque precontrol, 2 position encoders (encoder 1 and encoder 2)	-	-	x

Telegram (p0922 = x)	Description	Class 1	Class 3	Class 4
136	Dynamic Servo Control with torque precontrol, 2 position encoders (encoder 1 and encoder 2), 4 trace signals	-	-	x
138	Dynamic Servo Control with torque precontrol, 2 external position encoders (encoder 2 and encoder 3), 4 trace signals	-	-	x
139	Speed/position control with Dynamic Servo Control and torque precontrol, 1 position encoder, clamping status, additional actual values	-	-	x
166	Hydraulic axis (HLA) with two encoder channels and HLA additional signals	-	-	-
220	Speed setpoint, 32 bit, metal industry	x	-	-
352	16-bit speed setpoint for PCS7	x	-	-
370	Infeed	-	-	-
371	Infeed, metal industry	-	-	-
390	Control Unit with digital inputs DI 0 ... DI 15 and digital outputs DO 8 ... DO 15	-	-	-
391	Control Unit with digital inputs DI 0 ... DI 15, DO 8 ... DO 15 and 2 probes	-	-	-
392	Control Unit with digital inputs DI 0 ... DI 15, digital outputs DO 8 ... DO 15 and 6 probes	-	-	-
393	Control Unit with digital inputs DI 0 ... DI 22, digital outputs DO 8 ... DO 16, 8 probes and analog input	-	-	-
394	Control Unit with digital inputs DI 0 ... DI 22 and digital outputs DO 8 ... DO 16	-	-	-
395	Control Unit with digital inputs DI 0 ... DI 22, digital outputs DO 8 ... DO 16 and 16 probes	-	-	-
700	Supplementary PZD-0/3	-	-	-
701	Supplementary PZD-2/5	-	-	-
750	Supplementary PZD-3/1	-	-	-
999	Free interconnection and length	x	x	x

6.7.3 Cyclic communication

Cyclic communication is used to exchange time-critical process data (e.g. setpoints and actual values).

6.7.3.1 Telegrams and process data

General information

Selecting a telegram via CU parameter p0922 determines which process data is transferred.

From the perspective of the drive unit, the received process data comprises the receive words and the process data to be sent, the send words.

The receive and send words comprise the following elements:

- Receive words: Control words and setpoints
- Send words: Status words and actual values

Default setting "Profidrive"

When the "Profidrive" default setting is chosen for command and setpoint selection (see "Command sources / "Profidrive" default settings"), "Free telegram" (p0922 = 999) is selected.

The receive telegram is parameterized as follows as a result of the default setting:

STW1	NSOLL_A

The send telegram is as follows (factory setting):

ZSW1	NIST_GLATT	IAIST_GLATT	MIST_GLATT	PIST_GLATT	FAULT_CODE

You do not have to make any further settings in order to use these telegrams.

User-defined telegram selection

a. Standard telegrams

Standard telegrams are structured in accordance with PROFIdrive profile or internal company specifications. Process data is automatically interconnected internally corresponding to the telegram number set in parameter p0922.

The following standard telegrams can be set via parameter p0922:

- p0922 = 1 -> Speed setpoint, 16 bit
- p0922 = 2 -> Speed setpoint, 32 bit
- p0922 = 3 -> Speed setpoint 32 bit with 1 position controller
- p0922 = 4 -> Speed setpoint 32 bit with 2 position controller
- p0922 = 7 -> Positioning telegram 7
- p0922 = 20 -> Speed setpoint, 16 bit VIK-NAMUR
- p0922 = 352 -> Speed setpoint, 16-bit PCS7

Depending on the setting in p0922, the interface mode of the control and status word is automatically set:

- p0922 = 1, 352, 999:
  STW 1/STW 1: Interface Mode SINAMICS / MICROMASTER, p2038 = 0
- p0922 = 20:
  STW 1/STW 1: Interface Mode PROFIdrive VIK-NAMUR, p2038 = 2

b. Manufacturer-specific telegrams

The manufacturer-specific telegrams are structured in accordance with internal company specifications. The internal process data links are set up automatically in accordance with the telegram number setting.

The following vendor-specific telegrams can be set via p0922:

- p0922 = 110 Positioning telegram 110
- p0922 = 220 Speed setpoint 32 bit, metal industry
- p0922 = 371 Infeed, metal industry

c. Free telegrams (p0922 = 999)

Send and receive telegrams can be configured as required by using BICO technology to interconnect the send and receive words. The default process data assigned under a) is retained during the changeover to p0922 = 999, although it can be changed or supplemented at any time.

To maintain compliance with the PROFIdrive profile, however, the following assignments should be retained:

- Interconnect PZD receive word 1 as control word 1 (STW 1)
- Interconnect PZD send word 1 as status word 1 (STW 1)

For more information about possible interconnections, see function diagrams FP2460 and FP2470 and the simplified diagrams 620 to 622.

Telegram interconnections

- After changing p0922 = 999 (factory setting) to p0922 ≠ 999, the telegrams are interconnected and blocked automatically.
  Exceptions are telegrams 20, 220 and 352. There, in addition to the fixed interconnections, selected process data (PZD) can be interconnected as required in the send/receive telegram.
- When you change p0922 ≠ 999 to p0922 = 999, the previous telegram interconnection is retained and this can be changed.
- If p0922 = 999, a telegram can be selected in p2079. A telegram interconnection is automatically made and blocked. However, the telegram can also be extended.
  This is an easy method for creating extended telegram interconnections on the basis of existing telegrams.

6.7.3.2 Structure of the telegrams

Table 6- 15 Structure of the telegrams

Telegr.	PZD 1	PZD 2	PZD 3	PZD 4	PZD 5	PZD 6	PZD 7	PZD 8	PZD 9	PZD 10
1	STW1	NSOLL_A								
	ZSW1	NIST_A								
2	STW1	NSOLL_B		STW2						
	ZSW1	NIST_B		ZSW2						
3	STW1	NSOLL_B		STW2	G1_STW					
	ZSW1	NIST_B		ZSW2	G1_ZSW	G1_XIST1		G1_XACT2		
4	STW1	NSOLL_B		STW2	G1_STW	G2_STW				
	ZSW1	NIST_B		ZSW2	G1_ZSW	Further assignment, see FP2420				
20	STW1	NSOLL_A								
	ZSW1	NIST_A_GLATT	IAIST_GLATT	MIST_GLATT	PIST_ GLATT	MELD_NAMUR				
220	STW1_BM	NSOLL_B		STW2_BM	M_ADD	M_LIM	free	free	free	free
	ZSW1_BM	NIST_A	IAIST	MIST	WARN_CODE	FAULT_CODE	ZSW2_BM	free	free	free
352	STW1	NSOLL_A	PCS7_3	PCS7_4	PCS7_5	PCS7_6				
	ZSW1	NIST_A_GLATT	IAIST_GLATT	MIST_GLATT	WARN_CODE	FAULT_CODE				
370	E_STW1									
	E_ZSW1									
371	E_STW1_BM	free	free	free	free					
	E_ZSW1_BM	IAIST	WARN_CODE	FAULT_CODE	free	free	free	free		
999	STW1	free	free	free	free	free	free	free	free	free
	ZSW1	free	free	free	free	free	free	free	free	free

6.7.3.3 Overview of control words and setpoints

Table 6- 16 Overview of control words and setpoints

Abbreviation	Description	Parameter	Function diagram
STW1	Control word 1 (interface mode SINAMICS, p2038 = 0)	See table "Control word 1 (interface mode SINAMICS, p2038 = 0)"	FP2442
STW1	Control word 1 (interface mode VIK-NAMUR, p2038 = 2)	See table "Control word 1 (interface mode VIK-NAMUR, p2038 = 2)"	FP2441
STW1_BM	Control word 1, metal industry (interface mode SINAMICS, p2038 = 0)	See table "Control word 1, metal industry (interface mode SINAMICS, p2038 = 0)"	FP2425
STW2	Control word 2 (interface mode SINAMICS, p2038 = 0)	See table "Control word 2 (interface mode SINAMICS, p2038 = 0)"	FP2444
STW2_BM	Control word 2, metal industry (interface mode SINAMICS, p2038 = 0)	See table "Control word 2, metal industry (interface mode SINAMICS, p2038 = 0)"	FP2426
E_STW1	Control word 1 for infeeds	See table: "Control word 1 for infeeds"	FP2447
E_STW1_BM	Control word 1 for infeeds, metal industry	See table: "Control word 1 for infeeds, metal industry"	FP2427
NSOLL_A	Speed setpoint A (16-bit)	p1070	FP3030
NSOLL_B	Speed setpoint B (32-bit)	p1155	FP3080
PCS7_x	PCS7-specific setpoints		

6.7.3.4 Overview of status words and actual values

Table 6- 17 Overview of status words and actual values

Abbreviation	Description	Parameter	Function diagram
ZSW1	Status word 1 (interface mode SINAMICS, p2038 = 0)	See table "Status word 1 (interface mode SINAMICS, p2038 = 0)"	FP2452
ZSW1	Status word 1 (interface mode VIK-NAMUR, p2038 = 2)	See table "Status word 1 (interface mode VIK-NAMUR, p2038 = 2)"	FP2451
ZSW1_BM	Status word 1, metal industry (interface mode SINAMICS, p2038 = 0)	See table "Status word 1, metal industry (interface mode SINAMICS, p2038 = 0)"	FP2428
ZSW2	Status word 2 (interface mode SINAMICS, p2038 = 0)	See table "Status word 2 (interface mode SINAMICS, p2038 = 0)"	FP2454
ZSW2_BM	Status word 2, metal industry (interface mode SINAMICS, p2038 = 0)	See table "Status word 2, metal industry (interface mode SINAMICS, p2038 = 0)"	FP2429
E_ZSW1	Status word 1 for infeeds	See table: "Status word 1 for infeeds"	FP2457
E_ZSW1_BM	Status word 1 for infeeds, metal industry	See table: "Status word 1 for infeeds, metal industry"	FP2430
NIST_A	Speed setpoint A (16 bit)	r0063[0]	FP4715
NIST_B	Speed setpoint B (32 bit)	r0063	FP4710
IAIST	Actual value of current	r0068[0]	FP6714
MIST	Actual torque value	r0080[0]	FP6714
PIST	Actual power value	r0082[0]	FP6714
NIST_GLATT	Actual speed value smoothed	r0063[1]	FP4715
IAIST_GLATT	Current actual value, smoothed	r0068[1]	FP6714
MIST_GLATT	Torque actual value, smoothed	r0080[1]	FP6714
PIST_GLATT	Power actual value, smoothed	r0082[1]	FP6714
MELD_NAMUR	VIK-NAMUR message bit bar	r3113, see table "NAMUR message bit bar"	--
WARN_CODE	Alarm code	r2132	FP8065
ERROR_CODE	Error code	r2131	FP8060

6.7.4 Acyclic communication

Acyclic communication, as opposed to cyclic communication, means data is transferred only when an explicit request is made (e.g., in order to read and write parameters).

The "Read data record" and "Write data record" services are available for acyclic communication.

The following options are available for reading and writing parameters:

- S7 protocol

  This protocol uses the STARTER commissioning tool in online operation via PROFIBUS/PROFINET, for example.

- PROFIdrive parameter channel with the following data records:
  - PROFIBUS: Data block 47 (0x002F)

    The DPV1 services are available for master class 1 and master class 2.

  - PROFINET: Data block 47 and 0xB02F as global access, data block 0xB02E as local access

---

Note

References

Please refer to the following documentation for a detailed description of acyclic communication:
Reference: PROFIdrive profile
You can obtain the current version from "PROFIBUS and PROFINET International (PI)".

Addressing:

- PROFIBUS DP, addressing is carried out via the logical address or the diagnostics address.
- PROFINET IO, addressing is carried out exclusively via a diagnostics address that is assigned to a module starting from slot 1. Parameters cannot be accessed using slot 0.

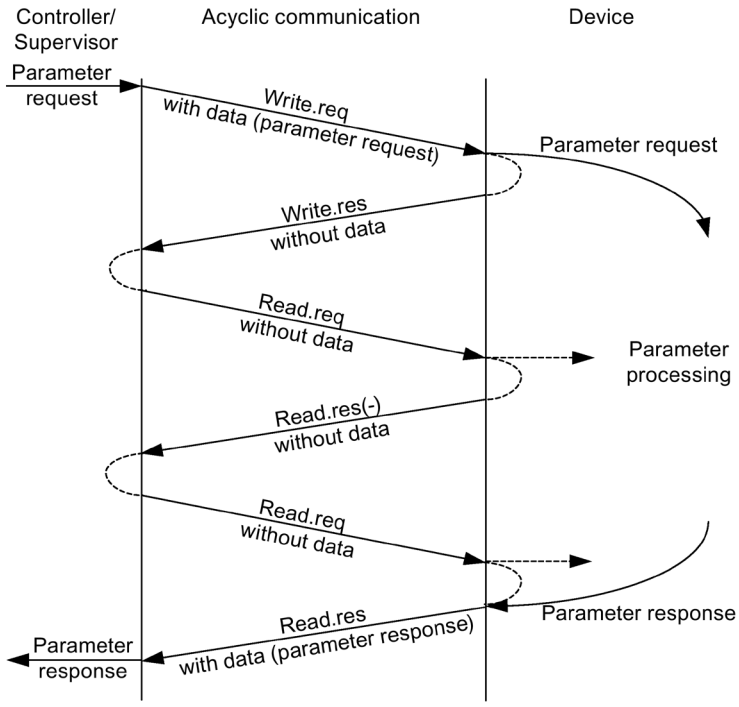

Figure 6-30 Reading and writing data

Characteristics of the parameter channel

- One 16-bit address exists for each parameter number and subindex.
- Simultaneous access by several additional PROFIBUS masters (master class 2) or PROFINET IO Supervisor (e.g., commissioning tool).
- Transfer of different parameters in one access operation (multiple parameter request).
- Transfer of complete arrays or part of an array possible.
- Only one parameter request is processed at a time (no pipelining).
- A parameter request/parameter response must fit into a data set (e.g. PROFIBUS: max. 240 bytes).
- The request or the response header is user data.

6.7.4.1 Structure of requests and responses

Structure of parameter request and parameter response

Table 6- 18 Structure of the parameter request

	Parameter request			**Offset**
Values for write access only	Request header	Request reference	Request ID	0
		Axis	Number of parameters	2
	1st parameter address	Attribute	Number of elements	4
		Parameter number		6
		Subindex		8
	...			
	nth parameter address	Attribute	Number of elements	
		Parameter number		
		Subindex		
	1st parameter value(s)	Format	Number of values	
		Values		
		...		
	...			
	nth parameter value(s)	Format	Number of values	
		Values		
		...		

Table 6- 19 Structure of the parameter response

	Parameter response			Offset
Values for read access only Error values for negative response only	Response header	Request reference mirrored	Response ID	0
		Axis mirrored	Number of parameters	2
	1st parameter value(s)	Format	Number of values	4
		Values or error values		6
		...		
	...			
	nth parameter value(s)	Format	Number of values	
		Values or error values		
		...		

Description of fields in the parameter request and response

Table 6- 20 Fields in the parameter request and response

Field	Data type	Values	Comment
Request reference	Unsigned8	0x01 ... 0xFF	
	Unique identification of the request/response pair for the master. The master changes the request reference with each new request. The slave mirrors the request reference in its response.		
Request ID	Unsigned8	0x01 0x02	Read job Write job
	Specifies the type of request. In the case of a write request, the changes are made in a volatile memory (RAM). A save operation is needed in order to transfer the modified data to the non-volatile memory (p0971, p0977).		
Response ID	Unsigned8	0x01 0x02 0x81 0x82	Read job(+) Write job(+) Read job(-) Write job(-)
	Mirrors the request ID and specifies whether request execution was positive or negative. Negative means: Cannot execute part or all of request. The error values are transferred instead of the values for each subresponse.		
Drive object number	Unsigned8	0x00 ... 0xFF	Number
	Setting for the drive object number of a drive unit with more than one drive object. Different drive objects with separate parameter number ranges can be accessed via the same DPV1 connection.		
Number of parameters	Unsigned8	0x01 ... 0x27	No. 1 ... 39 Limited by DPV1 telegram length
	Defines the number of following areas for the parameter address and/or parameter value for multi-parameter requests. The number of parameters = 1 for single requests.		
Attribute	Unsigned8	0x10 0x20 0x30	Value Description Text (not implemented)
	Type of parameter element accessed.		
Number of elements	Unsigned8	0x00 0x01 ... 0x75	Special function No. 1 ... 117 Limited by DPV1 telegram length
	Number of array elements accessed.		
Parameter number	Unsigned16	0x0001 ... 0xFFFF	No. 1 ... 65535

Field	Data type	Values	Comment
	Addresses the parameter to be accessed.		
Subindex	Unsigned16	0x0000 ... 0xFFFF	No. 0 ... 65535
	Addresses the first array element of the parameter to be accessed.		
Format	Unsigned8	0x02 0x03 0x04 0x05 0x06 0x07 0x08 Other values	Data type integer8 Data type integer16 Data type integer32 Data type unsigned8 Data type unsigned16 Data type unsigned32 Data type floating point See the actual PROFIdrive profile
		0x40 0x41 0x42 0x43 0x44	Zero (without values as a positive subresponse of a write request) Byte Word Double word Error
	The format and number specify the adjoining space containing values in the telegram. For write access, it is preferable to specify data types according to the PROFIdrive profile. Bytes, words and double words are also possible as a substitute.		
Number of values	Unsigned8	0x00 ... 0xEA	No. 0 ... 234 Limited by DPV1 telegram length
	Specifies the number of subsequent values.		
Error values	Unsigned16	0x0000 ... 0x00FF	Meaning of error values --> see following table
	The error values in the event of a negative response. If the values make up an odd number of bytes, a zero byte is attached. This ensures the integrity of the word structure of the telegram.		
Values	Unsigned16	0x0000 ... 0x00FF	
	The values of the parameter for read or write access. If the values make up an odd number of bytes, a zero byte is attached. This ensures the integrity of the word structure of the telegram.		

Error values in parameter responses

Table 6- 21 Error values in parameter responses

Error value	Meaning	Comment	Additional info
0x00	Illegal parameter number.	Access to a parameter that does not exist.	–
0x01	Parameter value cannot be changed.	Modification access to a parameter value that cannot be changed.	Subindex
0x02	Lower or upper value limit exceeded.	Modification access with value outside value limits.	Subindex
0x03	Invalid subindex.	Access to a subindex that does not exist.	Subindex
0x04	No array.	Access with subindex to an unindexed parameter.	–
0x05	Wrong data type.	Modification access with a value that does not match the data type of the parameter.	–
0x06	Illegal set operation (only reset allowed)	Modification access with a value not equal to 0 in a case where this is not allowed.	Subindex
0x07	Description element cannot be changed	Modification access to a description element that cannot be changed.	Subindex
0x09	No description data available	Access to a description that does not exist (the parameter value exists).	–
0x10	Read job will not be executed.	The read request is refused because know-how protection is active.	–
0x0B	No parameter change rights.	Modification access with no parameter change rights.	–
0x0F	No text array exists	Access to a text array that does not exist (the parameter value exists).	–
0x11	Request cannot be executed due to operating status.	Access is temporarily not possible for unspecified reasons.	–
0x14	Illegal value.	Modification access with a value that is within the limits but is illegal for other permanent reasons (parameter with defined individual values).	Subindex
0x15	Response too long.	The length of the present response exceeds the maximum transfer length.	–
0x16	Illegal parameter address.	Illegal or unsupported value for attribute, number of elements, parameter number, subindex or a combination of these.	–
0x17	Illegal format.	Write request: illegal or unsupported parameter data format.	–
0x18	Number of values inconsistent.	Write request: a mismatch exists between the number of values in the parameter data and the number of elements in the parameter address.	–
0x19	Drive object does not exist.	You have attempted to access a drive object that does not exist.	–
0x20	Parameter text cannot be changed.	–	–
0x21	Service is not supported.	Illegal or unknown request ID.	–
0x65	Parameter presently deactivated.	You have tried to access a parameter that, although available, does not currently perform a function (e.g., n control set and access to a U/f control parameter).	–
0x6B	Write access for the enabled controller.	Write access is possible while the device is in the "Controller enable" state. Pay attention to the parameter attribute "changeable" in the List Manual (C1, C2, U, T).	–
0x6C	Parameter %s [%s]: unit unknown.	–	–

Error value	Meaning	Comment	Additional info
0x6D	Parameter %s [%s]: write access only in the commissioning state, encoder (p0010 = 4).	–	–
0x6E	Parameter %s [%s]: write access only in the commissioning state, motor (p0010 = 3).	–	–
0x6F	Parameter %s [%s]: write access only in the commissioning state, power unit (p0010 = 2).	–	–
0x70	Parameter %s [%s]: write access only in quick commissioning (p0010 = 1).	–	–
0x71	Parameter %s [%s]: write access only in the ready state (p0010 = 0).	–	–
0x72	Parameter %s [%s]: write access only in the commissioning state, parameter reset (p0010 = 30).	–	–
0x73	Parameter %s [%s]: write access only in the commissioning state, safety (p0010 = 95).	–	–
0x74	Parameter %s [%s]: Write access only in the commissioning state, tech. application/units (p0010 = 5).	–	–
0x75	Parameter %s [%s]: write access only in the commissioning state (p0010 not equal to 0).	–	–
0x76	Parameter %s [%s]: write access only in the commissioning state, download (p0010 = 29).	–	–
0x77	Parameter %s [%s] must not be written during download.	–	–
0x78	Parameter %s [%s]: Write access only in the commissioning state, drive configuration (device: p0009 = 3).	–	–
0x79	Parameter %s [%s]: Write access only in the commissioning state, define drive type (device: p0009 = 2).	–	–
0x7A	Parameter %s [%s]: Write access only in the commissioning state, data record base configuration (device: p0009 = 4).	–	–
0x7B	Parameter %s [%s]: Write access only in the commissioning state, device configuration (device: p0009 = 1).	–	–
0x7C	Parameter %s [%s]: Write access only in the commissioning state, device download (device: p0009 = 29).	–	–
0x7D	Parameter %s [%s]: Write access only in the commissioning state, device parameter reset (device: p0009 = 30).	–	–
0x7E	Parameter %s [%s]: Write access only in the commissioning state, device ready (device: p0009 = 0).	–	–

Error value	Meaning	Comment	Additional info
0x7F	Parameter %s [%s]: Write access only in the commissioning state, device (device: p0009 not equal to 0).	–	–
0x81	Parameter %s [%s] must not be written during download.	–	–
0x82	Transfer of master control is blocked by BI: p0806.	–	–
0x83	Parameter %s [%s]: requested BICO interconnection not possible.	BICO output does not supply float values, however the BICO input requires float values.	–
0x84	Parameter %s [%s]: parameter change inhibited (refer to p0300, p0400, p0922)	–	–
0x85	Parameter %s [%s]: access method not defined.	–	–
0x87	Write job will not be executed.	The write job is rejected because know-how protection is active.	–
0xC8	Below currently valid limit.	Modification request for a value that, although within "absolute" limits, is below the currently valid lower limit.	–
0xC9	Above currently valid limit.	Modification request for a value that, although within "absolute" limits, is above the currently valid upper limit (e.g., specified by the actual converter rating).	–
0xCC	Write access not permitted.	Write access is not permitted because an access code is not available.	–

6.7.4.2 Determining the drive object numbers

Further information about the drive system (e.g., drive object numbers) can be determined as follows from parameters p0101, r0102 and p0107/r0107:

1. The value of parameter r0102 ("Number of drive objects") is read via a read request from drive object 1.

   The drive object with drive object number 1 is the Control Unit (CU), which is always present in every drive system, as a minimum.

2. Depending on the result of the initial read request, further read requests to drive object 1 are used to read the indices of parameter p0101 ("Drive object numbers"), as specified by parameter r0102.

   Example:
   If the number of drive objects is "5", the values of indices 0 to 4 of parameter p0101 are read. The relevant indices can also be read at once.

3. Following this, parameter r0107/p0107 ("Drive object type") is read for each drive object (indicated by the drive object number).

   Depending on the drive object, parameter 107 can be either an adjustable parameter or a display parameter.

   The value in parameter r0107/p0107 indicates the drive object type. The coding for the drive object type is specified in the parameter list.

6.7.4.3 Example 1: Reading parameters

Preconditions

- The PROFIdrive controller has been commissioned and is fully operational.
- PROFIdrive communication between the controller and the device is operational.
- The controller can read and write data sets in conformance with PROFINET/PROFIBUS.

Task description

Following the occurrence of at least one fault (STW1.3 = "1") at drive 2 (also drive object number 2), the active fault codes are to be read from the fault buffer r0945[0] ... r0945[7].

The request is to be handled using a request and response data block.

Basic procedure

1. Create a request to read the parameters.
2. Invoke request.
3. Evaluate response.

Create request

Table 6- 22 Parameter request

Parameter request			Offset
Request header	Request reference = 25 hex	Request ID = 01 hex	0 + 1
	Axis = 02 hex	Number of parameters = 01 hex	2 + 3
Parameter address	Attribute = 10 hex	Number of elements = 08 hex	4 + 5
	Parameter no. = 945 dec		6
	Subindex = 0 dec		8

Information about the parameter request:

- Request reference:
  The value is selected at random from the valid value range. The request reference establishes the relationship between request and response.
- Request identifier:
  01 hex → This identifier is required for a read request.
- Axis:
  02 hex → Drive 2, fault buffer with drive- and device-specific faults
- Number of parameters:
  01 hex → One parameter is read.
- Attribute:
  10 hex → The parameter values are read.
- Number of elements:
  08 hex → The actual fault incident with eight faults is to be read.
- Parameter number:
  945 dec → p0945 (fault code) is read.
- Subindex:
  0 dec → Reading starts at index 0.

Invoke request.

If STW1.3 = "1" → Initiate parameter request

Evaluate response.

Table 6- 23 Parameter response

Parameter response			Offset
Response header	Request reference mirrored = 25 hex	Response ID = 01 hex	0 + 1
	Axis mirrored = 02 hex	Number of parameters = 01 hex	2 + 3
Parameter value	Format = 06 hex	Number of values = 08 hex	4 + 5
	1st value = 1355 dec		6
	2nd value = 0 dec		8
	...		...
	8th value = 0 dec		20

Information about the parameter response:

- Request reference mirrored:
  This response belongs to the request with request reference 25.
- Response identifier:
  01 hex → Read request positive, values available starting from 1st value
- Request reference mirrored:
  The values correspond to the values from the request.
- Format:
  06 hex → Parameter values are in the unsigned16 format.
- Number of values:
  08 hex → 8 parameter values are available.
- 1st value ... 8th Value:
  A fault is only entered in the 1st value of the fault buffer for drive 2.

6.7.4.4 Example 2: Writing parameters (multi-parameter request)

Preconditions

- The PROFIdrive controller has been commissioned and is fully operational.
- PROFIdrive communication between the controller and the device is operational.
- The controller can read and write data sets in conformance with PROFINET/PROFIBUS.
- Special requirements for this example:
  Control mode: Vector control (with extended setpoint channel)

Task description

Jog 1 and 2 are to be set up for drive 2 (also drive object number 2) via the input terminals of the Control Unit. A parameter request is to be used to write the corresponding parameters as follows:

- BI: p1055 = r0722.4 — Jog bit 0
- BI: p1056 = r0722.5 — Jog bit 1
- p1058 = 300 rpm — Jog 1 speed setpoint
- p1059 = 600 rpm — Jog 2 speed setpoint

The request is to be handled using a request and response data block.

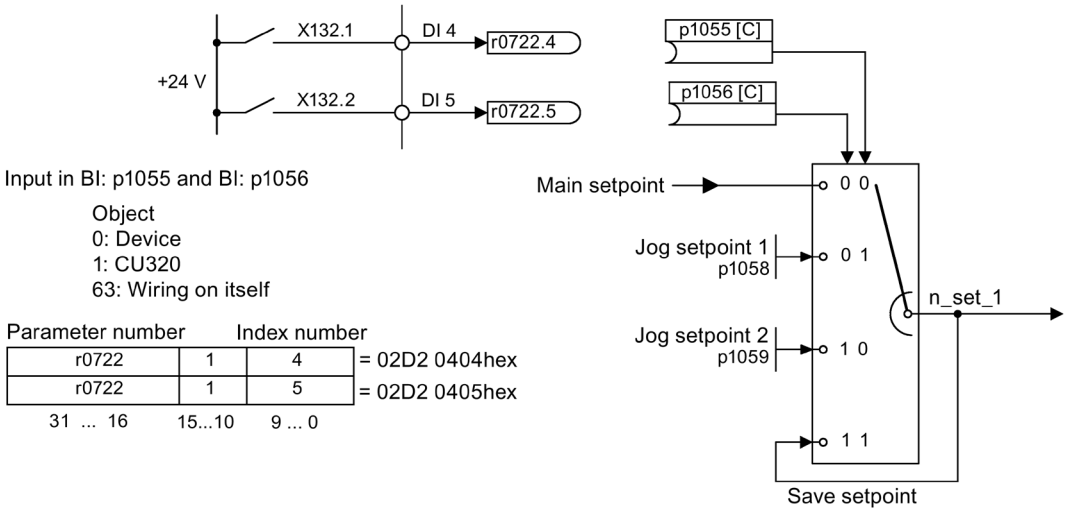

Figure 6-31 Task description for multi-parameter request (example)

Basic procedure

1. Create a request to write the parameters.
2. Invoke request.
3. Evaluate response.

Create request

Table 6- 24 Parameter request

Parameter request			Offset
Request header	Request reference = 40 hex	Request ID = 02 hex	0 + 1
	Axis = 02 hex	Number of parameters = 04 hex	2 + 3
1st parameter address	Attribute = 10 hex	Number of elements = 01 hex	4 + 5
	Parameter no. = 1055 dec		6
	Subindex = 0 dec		8
2nd parameter address	Attribute = 10 hex	Number of elements = 01 hex	10 + 11
	Parameter no. = 1056 dec		12
	Subindex = 0 dec		14
3rd parameter address	Attribute = 10 hex	Number of elements = 01 hex	16 + 17
	Parameter no. = 1058 dec		18
	Subindex = 0 dec		20
4th parameter address	Attribute = 10 hex	Number of elements = 01 hex	22 + 23
	Parameter no. = 1059 dec		24
	Subindex = 0 dec		26
1st parameter value(s)	Format = 07 hex	Number of values = 01 hex	28 + 29
	Value = 02D2 hex		30
	Value = 0404 hex		32
2nd parameter value(s)	Format = 07 hex	Number of values = 01 hex	34 + 35
	Value = 02D2 hex		36
	Value = 0405 hex		38
3rd parameter value(s)	Format = 08 hex	Number of values = 01 hex	40 + 41
	Value = 4396 hex		42
	Value = 0000 hex		44
4th parameter value(s)	Format = 08 hex	Number of values = 01 hex	46 + 47
	Value = 4416 hex		48
	Value = 0000 hex		50

Notes regarding parameter request:

- Request reference:
  The value is selected at random from the valid value range. The request reference establishes the relationship between request and response.
- Request identifier:
  02 hex → This identifier is required for a write request.
- Axis:
  02 hex → The parameters are written to drive 2.
- Number of parameters:
  04 hex → The multi-parameter request comprises 4 individual parameter requests.

1st parameter address ... 4th parameter address

- Attribute:
  10 hex → The parameter values are to be written.
- Number of elements:
  01 hex → 1 array element is written.
- Parameter number:
  Specifies the number of the parameter to be written (p1055, p1056, p1058, p1059).
- Subindex:
  0 dec → ID of the first array element.

1st parameter value ... 4th parameter value

- Format:
  07 hex → data type unsigned32
  08 hex → data type floating-point
- Number of values:
  01 hex → A value is written to each parameter in the specified format.
- Value:
  BICO input parameter: Enter signal source:
  Adjustable parameter: enter value

Invoke request.

Evaluate response.

Table 6- 25 Parameter response

Parameter response			Offset
Response header	Request reference mirrored = 40 hex	Response ID = 02 hex	0
	Axis mirrored = 02 hex	Number of parameters = 04 hex	2

Notes regarding parameter response:

- Request reference mirrored:
  This response belongs to the request with request reference 40.
- Request identifier:
  02 hex → Write request positive
- Axis mirrored:
  02 hex → The value matches the value from the request.
- Number of parameters:
  04 hex → The value matches the value from the request.

6.7.5 Diagnostics channels

The drive provides the standard diagnostics for PROFIBUS and PROFINET. This allows the PROFIdrive classes of the drive to be integrated into the system diagnostics of a higher-level control system and automatically displayed on an HMI.

The information transferred is saved for the drive objects in the following parameters:

- r0947[0...63] fault number
- r2122[0...63] alarm code
- r9747[0...63] SI message code (with safety messages)
- r3120[0..63] component fault
- r3121[0..63] component alarm
- r9745[0..63] SI component (with safety message)

The messages entered in these parameters are combined to create PROFIdrive message classes for diagnostics. Determining the source of a message is realized by transferring the component number as channel number.

The diagnostics are activated via the appropriate parameterization in the configuration tool being used (e.g. via HW Config).

The functional scope of the diagnostic channels depends on the bus system.

		PROFIdrive message classes		
		Faults	**Alarms**	**Component assignment**
PROFINET	GSDML	X	X	X
	TIA	X	X	X
PROFIBUS	GSD	X	-	-
	TIA	X	-	-

- The drive transfers the messages in the sequence in which they occurred.
- When a message occurs, the drive sends a communication message. The message remains until the drive sends the associated outgoing message.
- The time stamps are generated from the higher-level controller when the messages are received
- The existing mechanisms of TIA and S7 Classic can be used.
- Alarms or faults are acknowledged using the already known acknowledgment routes.
- Transfer is possible via interface IF1 and/or IF2.

Note

Constraint

If a shared device is activated, only the A-controller can receive diagnostics.

Note

Additional information

PROFIdrive message classes of the individual SINAMICS faults and alarms are provided in the List Manual.

6.7.5.1 Diagnostics via PROFINET

For PROFINET, to transfer PROFIdrive message classes, channel diagnostics (Channel Diagnosis) are used (see PROFINET IO specification (http://www.profibus.com)).

A message always comprises the following components in this specific sequence:

- Block Header (6 Byte)
  - Blocktype
  - Blocklength
  - BlockversionHigh
  - BlockversionLow
- API (4 Byte)
- Slot Number (2 Byte)
- Sub Slot Number (2 Byte)
- Channel Number (2 Byte)
- Channel Properties (0x8000) (2 Byte)
- User Structure Identifier (2 Byte)
- Channel Diagnosis Data (6 Byte)
  - Channel Number (2 Byte)
  - Channel Properties (2 Byte)
  - Channel Error Type (2 Byte)

Overview

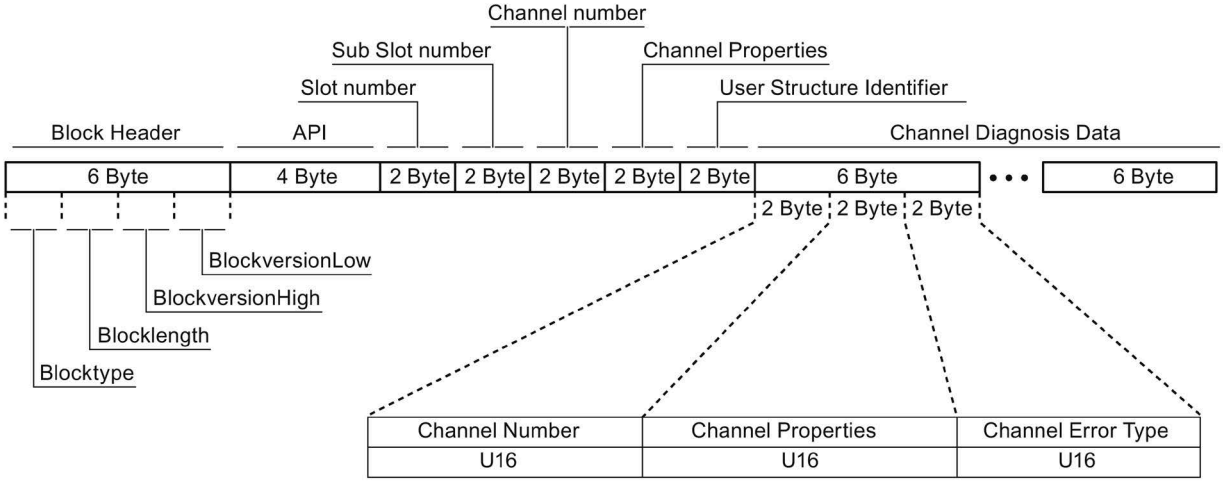

Figure 6-32 Components of a message

Individual components of the Channel Diagnosis Data block can be included n times in a message. A precise explanation of these message components is subsequently provided:

Table 6- 26 Components of a message

Designation		Data type/length	For SINAMICS	
			Value	Meaning
Channel Number		U16	1 ... 399	Component number
			0x8000	No component assignment [1]
Channel Properties		U16		
	.Type	Bits 7 ... 0	0	No data length
	.Accumulative	Bit 8	0	1 channel; no group formation
	.Maintenance	Bits 10, 9	0	Fault → diagnostics
			1	Alarm, Class 0 or A → maintenance required *(Maintenance required)*
			2	Alarm, Class B or C → maintenance required *(Maintenance demanded)*
	.Specifier	Bits 12, 11	0	Not used
			1	Message received
			2	Message issued, no additional message available in the channel
			3	Message issued, additional messages are available in the channel
	.Direction	Bits 15 ... 13	3	Input/Output
Channel Error Type		U16	0x9000	Hardware / software error
			0x9001	Network fault
			0x9002	Supply voltage fault
			0x9003	DC link overvoltage
			0x9004	Power electronics faulted
			0x9005	Overtemperature of the electronic components
			0x9006	Ground fault / inter-phase short circuit
			0x9007	Motor overload
			0x9008	Communication error to the higher-level control system
			0x9009	Safety monitoring channel has identified an error
			0x900A	Position/speed actual value incorrect or not available
			0x900B	Internal (DRIVE-CLiQ) communication error
			0x900C	Infeed faulted
			0x900E	Line filter faulted
			0x900F	External measured value / signal state outside the permissible range
			0x9010	Application / technological function faulted
			0x9011	Error in the parameterization / configuration / commissioning procedure
			0x9012	General drive fault
			0x9013	Auxiliary unit faulted

[1] For messages, which cannot be assigned to any particular component

System response - reading out diagnostics data

The converter requests diagnostics data via "Read data set" (detailed information is provided in the PROFINET-IO specification (http://www.profibus.com)).

Example:

For example, a read record with index 0x800C can be used to read out diagnostics data from specific sub slots.
The following rules apply exemplarily:

- 1 message block,
  if at this drive object (one or several) faults of the same message class are identified.
- n messages
  if, at this drive object, n faults of different message classes are identified.

Note

If a fault is active on the CU drive object, then this fault is propagated to all of the drive objects associated with the CU. This fault can therefore be read out at each drive object.

6.7.5.2 Diagnostics via PROFIBUS

For communication via PROFIBUS, in the case of fault the following diagnostics data is output:

- Standard diagnostics
- Identifier-related diagnostics
- Status messages/module status
- Channel-related diagnostics
- Data sets DS0/DS1 and diagnostics alarm

Message structure

The following applies if a message contains all of the specified diagnostics data:

- Standard diagnostics
  Is always located at the beginning of the message.
- Data sets DS0/DS1 and diagnostics alarm
  Is always located at the end of the message. This message part is always slot-specific. The actual state of the slot responsible for the message is always transferred in the message.

The other diagnostics data (types) can be in any sequence. This is the reason that the following diagnostics data include a header:

- Identifier-related diagnostics
- Status messages/module status
- Channel-related diagnostics

The diagnostic data type can be uniquely identified based on the header.

Note

The master must operate in the DPV1 mode.

Standard diagnostics

For communication via PROFIBUS, standard diagnostics is structured as follows.

Bit		7	6	5	4	3	2	1	0
Octet	**Name**								
1	Station status 1	Master_ Lock = 0	Prm_Fault	0	Not_ Supported	**Ext_Diag**	Cfg_Fault	Station_ Not_ Ready	Station_ Non_ Exist = 0
2	Station status 2	0	0	Sync_ Mode	Freeze_ Mode	WD_On	1	Stat_Diag = 0	Prm_Req
3	Station status 3	**Ext_ Diag_ Overflow**	0	0	0	0	0	0	0
4		Master_Add							
5		Ident_Number (HighByte) of the slave							
6		Ident_Number (LowByte) of the slave							

In this context, the following values are decisive for diagnostics:

- Ext_Diag
  - Group signal for diagnostics in the slave
  - = 1, if at least 1 alarm is active
- Ext_Diag_Overflow

  Display, diagnostics overflow in the slave (for more than 240 bytes)

Identifier-related diagnostics

The identifier-related diagnostics provides a bit (KB_n) for each slot 1 allocated when configuring the device. If a diagnostics message is active at a slot, then its KB_n = true.

Bit		7	6	5	4	3	2	1	0
Octet	**Name**								
1	Header-Byte Station status 1	0	1	Block length (2 ... 32) incl. this byte					
2	Bit structure	KB_7	KB_6	KB_5	KB_4	KB_3	KB_2	KB_1	KB_0
3	Bit structure	...	...	...	...	KB_11	KB_10	KB_9	KB_8
...		...							
x	Bit structure	...	...	KB_n+1	KB_n	...	...	...	...

Status messages/module status

Status messages and module status briefly represent an overview of the state of the devices:

Bit		7	6	5	4	3	2	1	0
Octet	**Name**								
1	Header byte	0	0	Block length (2 ... 32) incl. this byte					
2	Module status	0x82							
3	Slot	0							
4	Specifier	0							
5		Slot_4		Slot_3		Slot_2		Slot_1	
6		...		Slot_7		Slot_6		Slot_5	
...		...							
x		00		Slot_n		...		...	

Note

Status value

Diagnostics for SINAMICS are only available in cyclic PROFIBUS operation, so that the state 00 = "Valid user data" is always output for all slots.

Channel-related diagnostics

Channel-related diagnostics encompasses the following data:

Bit		7	6	5	4	3	2	1	0
Octet	**Name**								
x	Header-Byte	1 [1]	0 [1]	0 ... 63 (module number) including these bytes					
x + 1		1 [2]	1 [2]	0 (no component assignment)					
x + 2		0[3]	0[3]	Message classes: 2 Undervoltage 3 Overvoltage 9 Error 16 Hardware/software error 17 Line supply/filter faulted 18 DC-link overvoltage 19 Power electronics faulted 20 Electronic component overtemp. 21 Ground/phase fault detected 22 Motor overload 23 Commun. with controller faulted 24 Safety monit. Detected an error 25 Act. Position/speed value error 26 Internal communication faulted 27 Infeed faulted 28 Braking controller faulted 29 External signal state error 30 Application/function faulted 31 Parameterization/commiss. error					

[1] ≙ Channel-related diagnostics

[2] ≙ Input/output

[3] ≙ "Channel type "non specific"

System response

Only one signal is generated if channel-related diagnostics identifies several faults belonging to the same message class at the same drive object.

Data sets DS0/DS1 and diagnostics alarm

The PROFIdrive message classes are transferred using diagnostic alarm DS0/DS1. All faults are assigned channel 0. The drive objects are assigned using the slot number.

The structure is as follows:

Bit		7	6	5	4	3	2	1	0
Octet	**Name**								
1	Header-Byte	0	0	= 15 (block length)					
2		0	= 1 (diagnostics alarm)						
3		0 ... 244 (slot number ≙ drive object)							
4		0 ... 31 (sequence number)					Add_Ack	Alarm_Specifier [1]	
5	DS0 (byte 0)	0	0	0	0	1 [2]	0	1 [3]	1 [4]
6	DS0 (byte 1)	0	0	0	1 [5]	0[6]	0[6]	1 [6]	1 [6]
7	DS0 (Byte 2)	0	0	0	0	0	0	0	0
8	DS0 (byte 3)	0	0	0	0	0	0	0	0
9	Info (byte 1)	Mixed	= 0x45 (ChannelTypeID = SINAMICS)						
10	Info (byte 2)	= 24 (number of diagnostic bits/channel)							
11	Info (byte 3)	= 1 (1 channel signals)							
12	Channel Error Vector	0	0	0	0	0	0	0	Channel 0 1
13	Channel -related diag-nostics (channel 0)	Err 7	Err 6	Err 5	Err 4	Err 3	Err 2	Err 1	Err 0
14		Err 15	Err 14	Err 13	Err 12	Err 11	Err 10	Err 9	Err 8
15		0	0	0	0	Err 19	Err 18	Err 17	Err 16

1) Alarm_Specifier
1 ≙ error has occurred and the slot is not OK
2 ≙ error is resolved and the slot is OK
3 ≙ error is resolved and the slot is not okay

2) Channel fault present
= 1; as long as the drive object has an error condition

3) Internal fault
= 1; as long as the drive object has an error condition

4) Module fault
= 1; as long as the drive object has an error condition

5) Channel information present
= 1; ≙ DS1 exists

6) Type class of module
= 0011; ≙ Distributed

6.7.6 Further information about PROFIdrive communication

Further information about PROFIdrive communication

Additional information about communication based on PROFIdrive can be taken from the attached document "SINAMICS S120 Function Manual Communication" in Section "Communication according to PROFIdrive".

6.8 Communication via PROFIBUS DP

6.8.1 PROFIBUS connection

Positions of PROFIBUS connection, address switch, and diagnostics LED

The PROFIBUS connection, address switch, and diagnostics LED are located on the Control Unit CU320-2 DP.

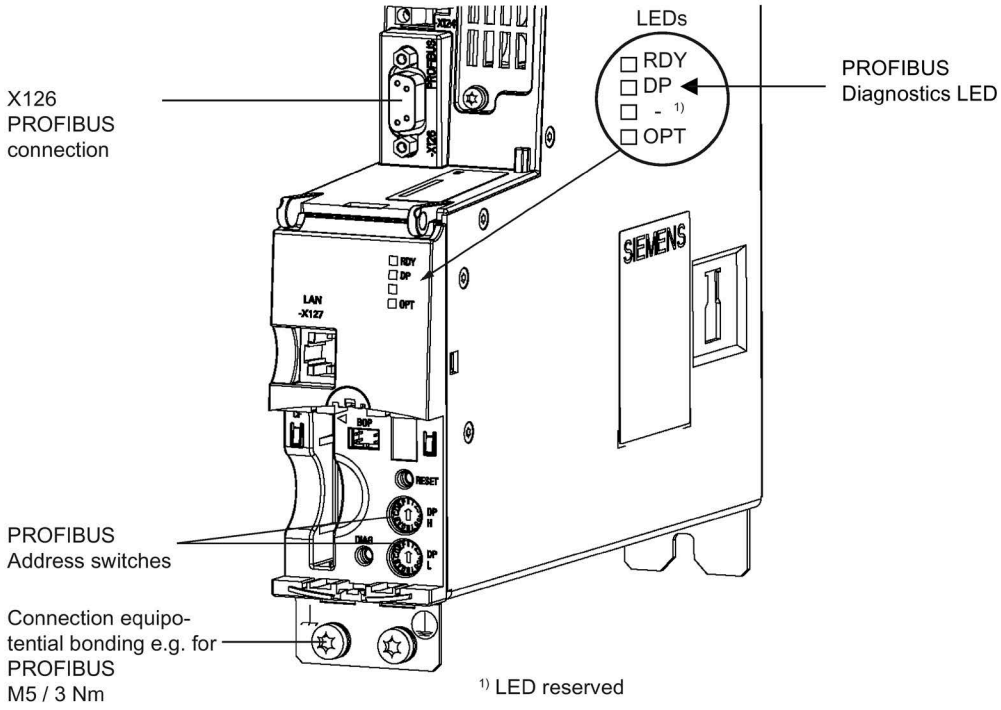

Figure 6-33 View of the Control Unit with PROFIBUS interface

PROFIBUS connection

The PROFIBUS is connected by means of a 9-pin SUB D socket (X126). The connections are electrically isolated.

Table 6- 27 X126 - PROFIBUS connection

	Pin	Signal name	Meaning	Range
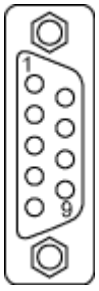	1	SHIELD	Ground connection	
	2	M24_SERV	Power supply for teleservice, ground	0 V
	3	RxD/TxD-P	Receive / transmit data P (B/B')	RS485
	4	CNTR-P	Control signal	TTL
	5	DGND	PROFIBUS data reference potential (C/C')	
	6	VP	Supply voltage plus	5 V ± 10%
	7	P24_SERV	Power supply for teleservice P, + (24 V)	24 V (20.4 ... 28.8 V)
	8	RxD/TxD-N	Receive / transmit data N (A/A')	RS485
	9	-	Not assigned	

Connectors

The cables must be connected via PROFIBUS connectors as they contain the necessary terminating resistors.

The figure below shows suitable PROFIBUS connectors with/without a PG/PC connector.

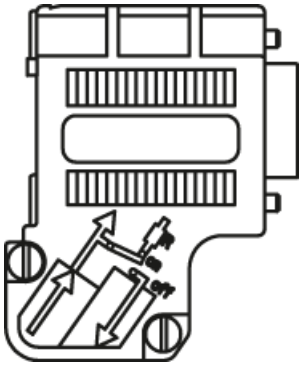

PROFIBUS connector
without PG/PC connection
6ES7972-0BA42-0XA0

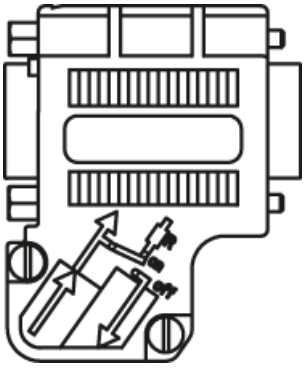

PROFIBUS connector
with PG/PC connection
6ES7972-0BB42-0XA0

Bus terminating resistor

The bus terminating resistor must be switched on or off depending on its position in the bus, otherwise the data will not be transmitted properly.

The terminating resistors for the first and last nodes in a line must be switched on; the resistors must be switched off at all other connectors.

The cable shield must be connected at both ends over large-surface area contacts.

Note

Connector type

Depending on the connector type, the correct assignment of the connector must be ensured (IN/OUT) in conjunction with the terminating resistor.

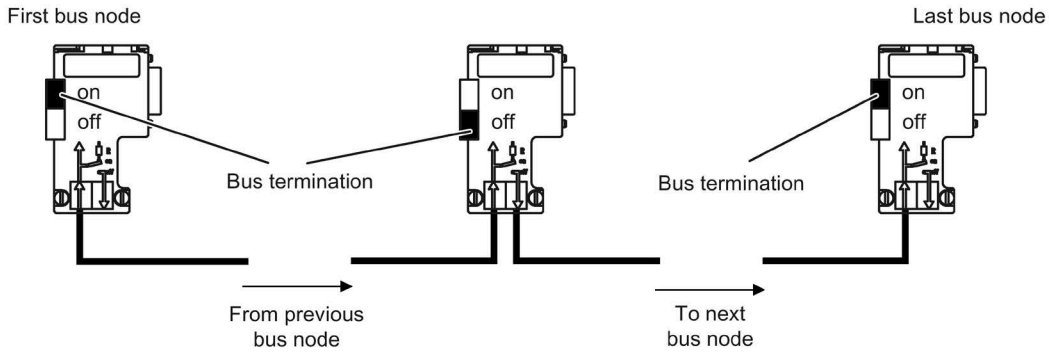

Figure 6-34 Position of the bus terminating resistors

Cable routing

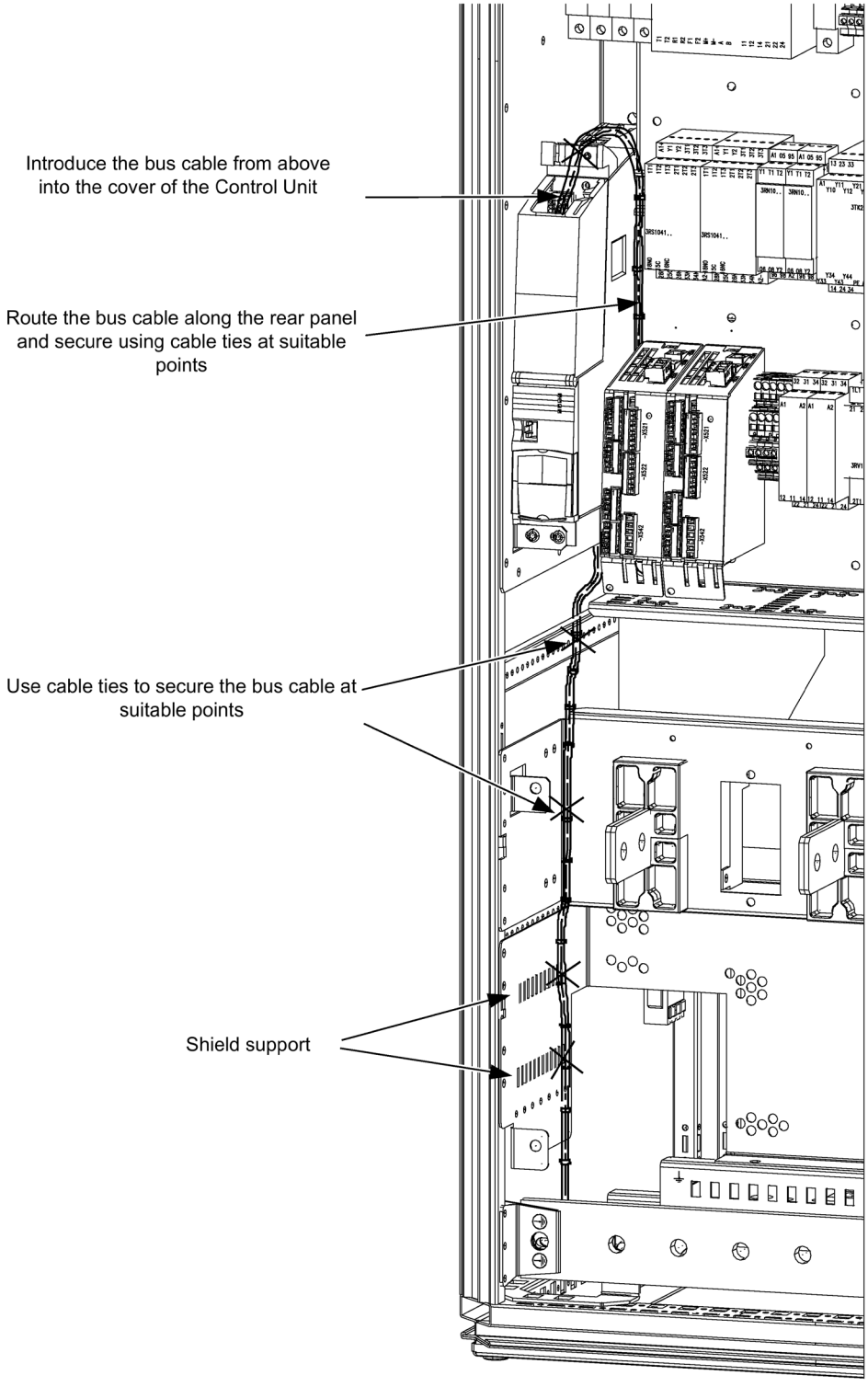

Figure 6-35 Cable routing

6.8.2 General information about PROFIBUS DP

6.8.2.1 General information about PROFIBUS DP for SINAMICS

General information

PROFIBUS is an open international fieldbus standard for a wide range of production and process automation applications.

The following standards ensure open, multi-vendor systems:

- International standard EN 50170
- International standard IEC 61158

PROFIBUS is tuned for high-speed, time-critical data communication at field level.

Note

PROFIBUS for drive technology is standardized and described in the following document:
PROFIdrive Profile Drive Technology

PROFIBUS User Organization e. V.
Haid-und-Neu-Strasse 7, D-76131 Karlsruhe

http://www.profibus.com

Note

Before synchronizing to the isochronous PROFIBUS, all of the drive object pulses must be inhibited - also for those drives that are not controlled via PROFIBUS.

PROFIBUS interface: The cyclic PZD channel is deactivated when the **CBE20** is plugged in!

NOTICE

Destruction of the CU320-2 or other CAN bus nodes by connecting a CAN cable

Connecting a CAN cable to interface X126 of the CU320-2 can destroy the CU320-2 or other CAN bus nodes.

- Do not connect any CAN cable to the X126 interface.

Master and slave

- Master and slave properties

Properties	Master	Slave
As bus node	Active	Passive
Send messages	Permitted without external request	Only possible on request by master
Receive messages	Possible without any restrictions	Only receive and acknowledge permitted

- Master

  The following classes are differentiated:

  – Master class 1 (DPMC1):

    Central automation stations that exchange data with the slaves in cyclic and acyclic mode. Communication between the masters is also possible.

    Examples: SIMATIC S7, SIMOTION

  – Master class 2 (DPMC2):

    Devices for configuration, commissioning, operator control and monitoring during bus operation. Devices that only exchange data with the slaves in acyclic mode.

    Examples: Programming devices, human machine interfaces

- Slaves

  With respect to PROFIBUS, the SINAMICS drive unit is a slave.

Bus access method

PROFIBUS uses the token passing method, i.e. the active stations (masters) are arranged in a logical ring in which the authorization to send is received within a defined time frame.

Within this time frame, the master with authorization to send can communicate with the assigned slaves and/or with other masters in a master/slave procedure.

PROFIBUS telegram for cyclic data transmission and acyclic services

Each drive unit that supports cyclic process data exchange uses a telegram to send and receive all the process data. A separate telegram is sent in order to perform all the acyclic services (read/write parameters) under a single PROFIBUS address. The acyclic data is transferred with a lower priority after cyclic data transmission.

The overall length of the telegram increases with the number of drive objects that are involved in exchanging process data.

6.8.2.2 Sequence of DOs in the telegram

Sequence of drive objects in the telegram

On the drive side, the sequence of drive objects in the telegram is displayed via a list in p0978[0...24] where it can also be changed.

Using the STARTER commissioning tool you can display the sequence of drive objects for a commissioned drive system in the project navigator under "Drive unit" **>** "Communication" > "Telegram configuration".

When you create the configuration on the controller side (e.g. HW Config), the process-data-capable drive objects for the application are added to the telegram in the sequence shown (see above).

The following drive objects can exchange process data:

- Active Infeed (A_INF)
- Basic Infeed (B_INF)
- Control Unit (CU_S)
- ENC
- Smart Infeed (S_INF)
- SERVO
- Terminal Board 30 (TB30)
- Terminal Module 15 (TM15)
- Terminal Module 31 (TM31)
- Terminal Module 41 (TM41)
- Terminal Module 120 (TM120)
- Terminal Module 150 (TM150)
- VECTOR

Note

The sequence of the drive objects

The sequence of drive objects in HW Config must be the same as that in the drive (p0978).

Drive objects after the first zero in p0978 must not be configured in the HW Config.

The structure of the telegram depends on the drive objects taken into account during configuration. Configurations are permitted that do not take into account all of the drive objects that are present in the drive system.

Example:

The following configurations, for example, are possible:

- Configuration with VECTOR, VECTOR, VECTOR
- Configuration with A_INF, VECTOR, VECTOR, VECTOR, TMB31
- etc.

6.8.3 Control via PROFIBUS

Diagnostics LED "COM (PROFIdrive)"

The PROFIBUS diagnostics LED is located on the front of the Control Unit. Its states are described in the following table.

Table 6- 28 Description of the "COM" LED

Color	State	Description
-----	OFF	Cyclic communication is not (yet) running. **Note:** The PROFIdrive is ready for communication when the Control Unit is ready for operation (see LED RDY).
Green	Continuous light	Cyclic communication is taking place.
Green	0.5 Hz flashing light	Cyclic communication has still not been fully established. Possible causes: - The controller is not transmitting any setpoints. - In isochronous mode, the controller did not send a Global Control or it sent a defective Global Control (GC).
Red	0.5 Hz flashing light	PROFIBUS master is sending incorrect parameter assignment/configuration
Red	2 Hz flashing light	Cyclic bus communication has been interrupted or could not be established.

Setting the PROFIBUS Address

There are two ways to set the PROFIBUS address:

1. Via p0918
   - To set the bus address for a PROFIBUS node using STARTER, first set the rotary code switches to 0_{dec} (00_{hex}) and 127_{dec} ($7F_{hex}$).
   - Then use parameter p0918 to set the address to a value between 1 and 126.
2. Via the PROFIBUS address switches on the Control Unit
   - The address is set manually to values between 1 and 126 using the rotary coding switches. In this case, p0918 is only used to read the address.

Note

The rotary coding switches used to set the PROFIBUS address are located beneath the cover.

Note

Address 126 is used for commissioning. Permitted PROFIBUS addresses are 1 ... 126.

When several Control Units are connected to a PROFIBUS line, you set the addresses differently than for the factory setting. Each PROFIBUS address in a PROFIBUS line can only be assigned once. Either set the PROFIBUS address in absolute terms using the rotary coding switches – or selectively in parameter p0918. Each change made to the bus address is not effective until POWER ON.

The currently set address of the rotary coding switch is displayed in parameter r2057.

PROFIBUS address switches

The PROFIBUS address is set as a hexadecimal value via two rotary coding switches. Values between 0_{dec} (00_{hex}) and 127_{dec} ($7F_{hex}$) can be set as the address. The upper rotary coding switch (H) is used to set the hexadecimal value for 16^1 and the lower rotary coding switch (L) is used to set the hexadecimal value for 16^0.

Table 6- 29 PROFIBUS address switches

Rotary coding switches	Significance	Examples		
		21_{dec}	**35_{dec}**	**126_{dec}**
		15_{hex}	**23_{hex}**	**$7E_{hex}$**
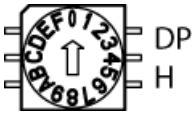	$16^1 = 16$	1	2	7
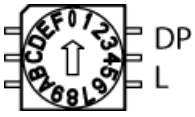	$16^0 = 1$	5	3	E

The factory setting for the rotary coding switches is 0_{dec} (00_{hex}).

Setting the PROFIBUS ID number

The PROFIBUS Ident Number (PNO-ID) can be set using p2042.

SINAMICS can be operated on PROFIBUS with various identities. This allows a PROFIBUS GSD that is independent of the device to be used (e.g. PROFIdrive VIK-NAMUR with Ident Number 3AA0 hex).

- 0: SINAMICS S/G
- 1: VIK-NAMUR

New settings do not become active until after POWER ON, reset, or download.

Note

Totally Integrated Automation

The advantages of Totally Integrated Automation (TIA) can only be utilized when selecting "0".

6.8.4 Monitoring: Telegram failure

Description

In monitoring for telegram failure, two cases are possible:

- Telegram failure with a bus fault

  After a telegram failure and the additional monitoring time has elapsed (p2047), bit r2043.0 is set to "1" and alarm A01920 is output. Binector output r2043.0 can be used for an emergency stop, for example.

  After the fault delay time (p2044) has expired, fault F01910 is output.
  Fault F01910 triggers fault response OFF2 (pulse inhibit) for the infeed and OFF3 (quick stop) in the drive.
  The fault response can be re-parameterized if an OFF response is not to be initiated.

  Fault F01910 can be acknowledged immediately. The drive can then be operated even without PROFIdrive.

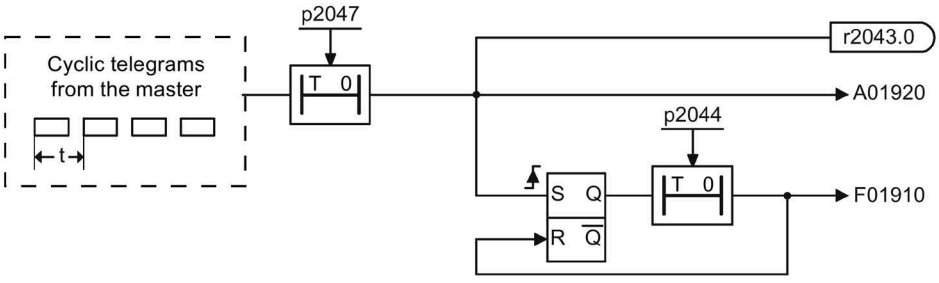

Figure 6-36 Monitoring telegram failure with a bus fault

- Telegram failure with a CPU stop

  After telegram failure, bit r2043.0 is set to "1". Binector output r2043.0 can be used for an emergency stop, for example.

  After the fault delay time (p2044) has expired, fault F01910 is output.
  Fault F01910 triggers fault response OFF2 (pulse inhibit) for the infeed and OFF3 (quick stop) in the drive.
  The fault response can be re-parameterized if an OFF response is not to be initiated.

  Fault F01910 can be acknowledged immediately. The drive can then be operated even without PROFIdrive.

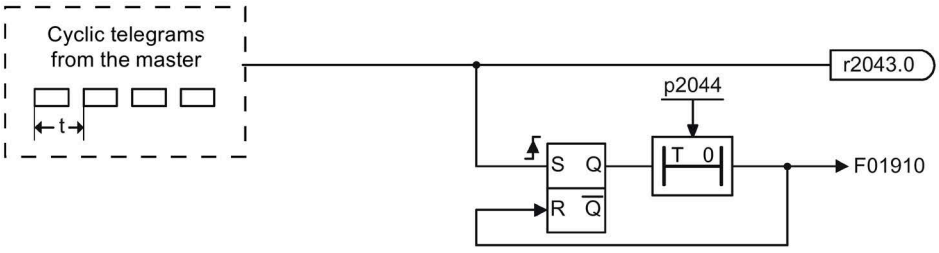

Figure 6-37 Monitoring telegram failure for a CPU stop

6.8.5 Creating an S150 in SIMATIC Manager

Once you have called up the hardware manager, you have to choose the Profibus line to which the S150 is to be connected.
In the catalog, double-click the S150 below the "Profibus-DP/Sinamics" folder. A window is displayed in which you can set the S150 bus address. It must be the same as the address on the converter (switch on CU320 or p0918).
To confirm your entries, choose OK. The "Configuration" tab is then displayed in the "DP_Slave_Properties" window.

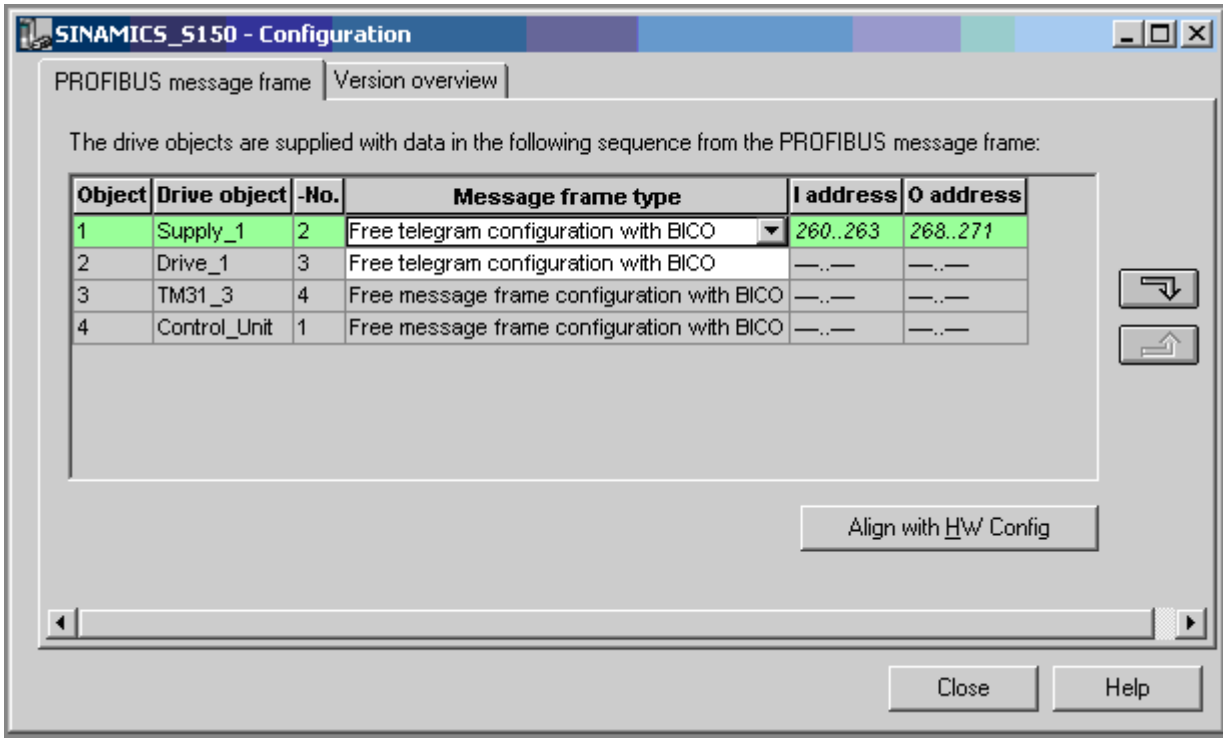

Figure 6-38 SIMATIC screen in HWConfig: DP slave properties S150

The number 1 is entered in the first field under "Object". Standard telegram 1 is defaulted in the field under "Telegram selection".
To display a selection field in which you can select different telegram types, click the standard telegram.
To display or change details (e.g. addresses for peripheral equipment) for the selected telegram, choose the "Details" tab. If you want to use user-definable telegrams (p0922=999) instead of standard telegrams, you can also change the number of PZDs here. The number of PZDs in the send and receive direction does not have to be the same.

Once you have saved your configuration, you have to make a number of settings for the converter. A distinction is made here between using the AOP and the STARTER commissioning tool.

Using the AOP

Once you have carried out basic commissioning for the S150, you have to select the device configuration using CU parameter p0009 = 1. You then have to enter a 3 in CU parameter p0978 index 0 and a 2 in p0978 index 1. Save the data to the EEPROM. To exit the device configuration, use p0009 = 0. Subsequent activities for interconnecting the process data in the converter are carried out in accordance with the setting for CU parameter p0922 or on the basis of function diagrams FD2410 to FD2483.

Using the STARTER Stand ALONE commissioning tool

Once you have worked through the steps with the device Wizard in STARTER, you have to set parameter p0009 in the Control Unit expert list to 1 (device configuration). You then have to enter a 3 in CU parameter p0978 index 0 and a 2 in p0978 index 1. To exit the device configuration, use p0009 = 0. You must ensure that the new parameters are saved to the EEPROM in online mode.

Using the STARTER and DRIVE ES software tools

If the DRIVE_ES program is installed in addition to the SIMATIC Step 7 program and the STARTER commissioning tool, you can access STARTER directly from SIMATIC Manager. You have to configure the SINAMICS S150 using the device Wizard in STARTER and then open the "Configuration" screen below the drive name.

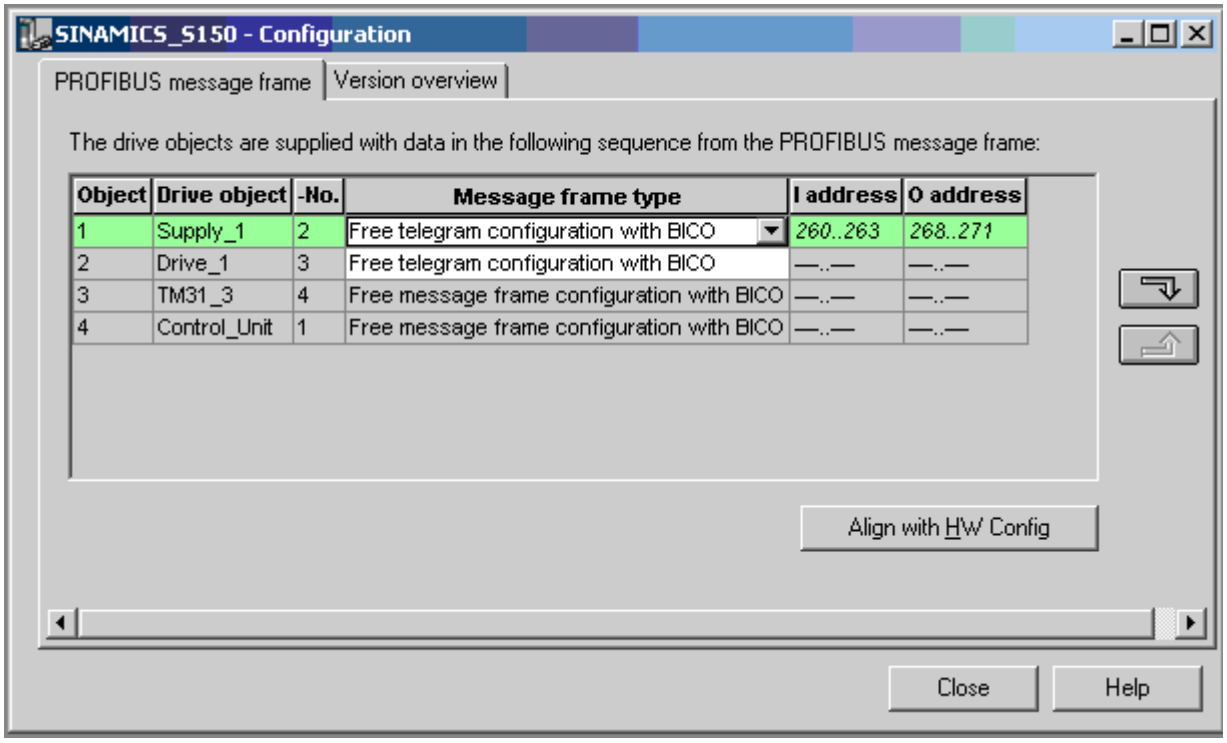

Figure 6-39 STARTER: the "Configuration" screen when opened for the first time

In this screen, the peripheral equipment addresses created in "HWConfig" in SIMATIC Manager are assigned to the infeed rather than the drive. To swap the infeed and drive in the table, click the "down" arrow on the right-hand side of the screen. Now close the screen and open it again. The peripheral equipment addresses are now assigned to the drive. To compare this setting with SIMATIC Manager, click the "Compare with HWConfig" button. The parameters can now be loaded to the converter.

6.8.6 Further information about communication via PROFIBUS DP

Further information about communication via PROFIBUS DP

For more information about communication via PROFIBUS DP, refer to "Communication via PROFIBUS DP" in the accompanying "SINAMICS S120 Function Manual Communication".

6.9 Communication via PROFINET IO

6.9.1 Activating online operation: STARTER via PROFINET IO

Description

Online operation with PROFINET IO is implemented using TCP/IP.

Preconditions

- STARTER Version 4.2 or higher
- Control unit CU320-2 PN or CBE20

STARTER via PROFINET IO (example)

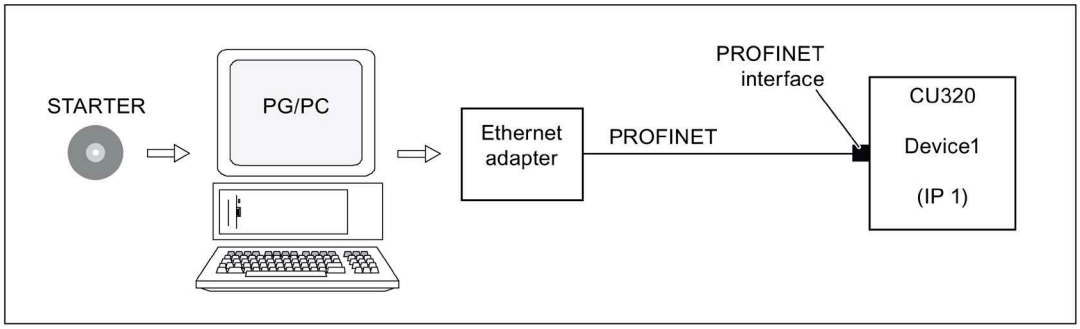

Figure 6-40 STARTER via PROFINET (example)

Procedure, establishing online operation with PROFINET

1. Setting the IP address in Windows

   The PC/PG is referred here to a fixed, free IP address.
2. Settings in STARTER
3. Assigning the IP address and the name

   The PROFINET interface must be "baptized" so that the STARTER can establish communication.
4. Select online operation in STARTER.

Setting the IP address in Windows

On the desktop, right-click on "Network environment" -> Properties -> double-click on Network card and choose -> Properties -> Internet Protocol (TCP/IP) -> Properties -> Enter the freely-assignable addresses.

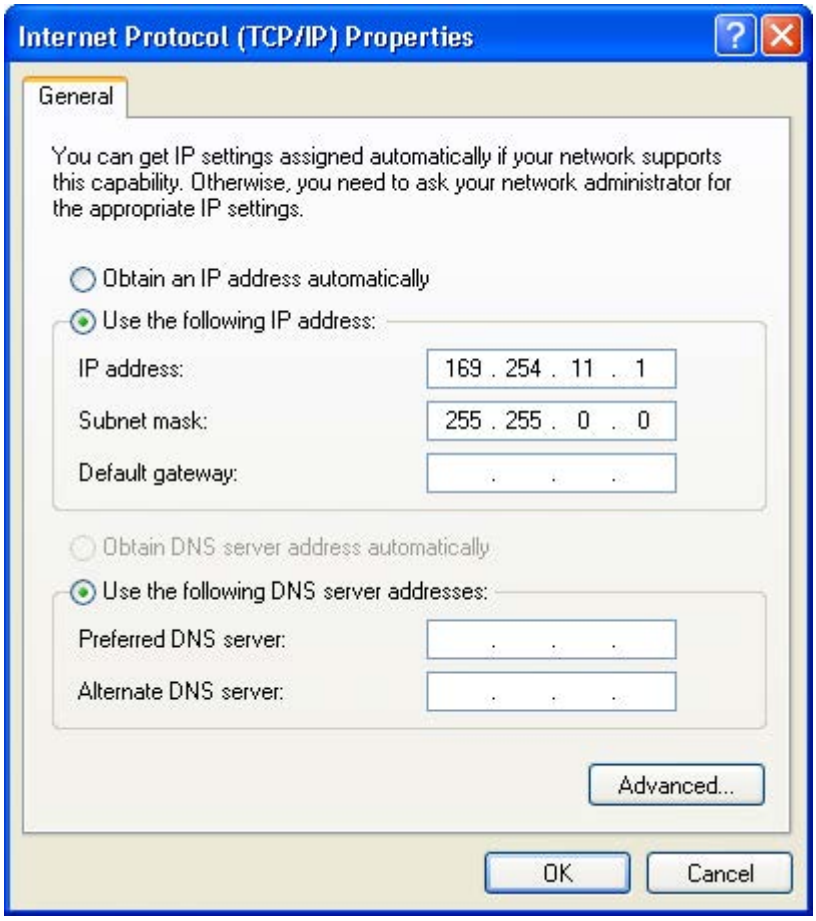

Figure 6-41 Internet Protocol (TCP/IP) properties

Settings in STARTER

The following settings are required in STARTER for communication via PROFINET:

- Extras -> Set PG/PC interface

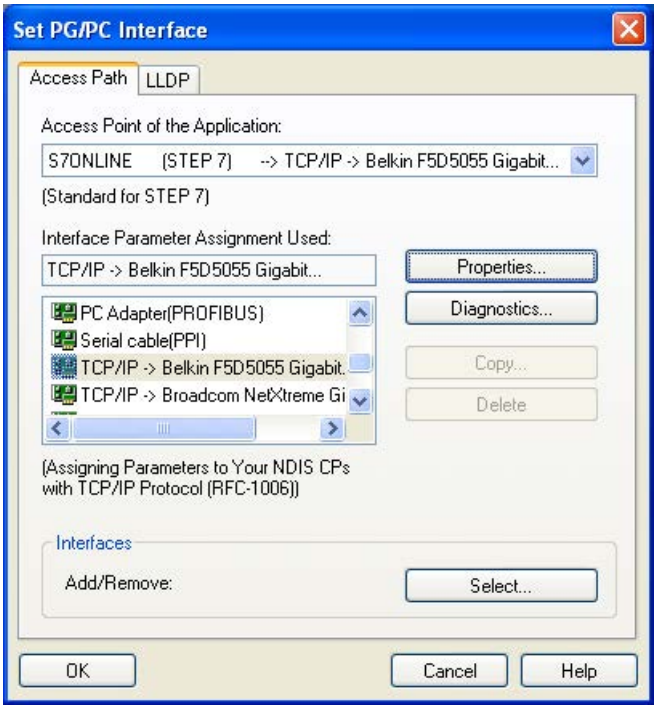

Figure 6-42 Set the PG/PC interface

- Right-click Drive unit -> Target device -> Online access -> Module address

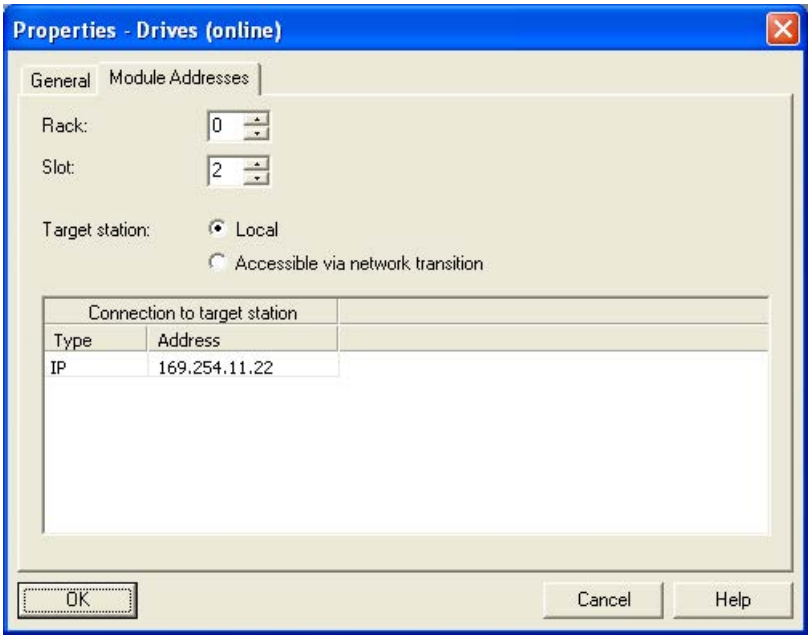

Figure 6-43 Activating online operation

Assigning the IP address and the name

Note

Naming devices

ST (Structured Text) conventions must be satisfied for the name assignment of IO devices in PROFINET (SINAMICS components). The names must be unique within PROFINET.
The characters "-" and "." are not permitted in the name of an IO device.

Assignment with STARTER, "Accessible nodes" function

Use the STARTER to assign an IP address and a name to the PROFINET interface.

- Connect the direct Ethernet cable from the PG/PC to the PROFINET interface.
- Switch on the Control Unit.
- Open STARTER.
- A search is performed for available nodes in PROFINET via Project -> Accessible nodes or the "Accessible nodes" button.
- The SINAMICS drive object is detected and displayed as a bus node with IP address 0.0.0.0 and without a name.
- Mark the bus node entry and select the displayed menu item "Edit Ethernet node" with the right mouse button.
- In the following "Edit Ethernet node" screen, enter the device name for the PROFINET interface and click the "Assign name" button. Enter the IP address (e.g. 169.254.11.22) in the IP configuration and specify the subnet screen (e.g. 255.255.0.0). Then click the "Assign IP configuration" button. Close the screen.
- The "Update (F5)" button displays the IP address and name in the entry for the bus node. If not, close the "Accessible nodes" screen and perform another search for accessible nodes.
- If the PROFINET interface is displayed as bus node, mark the entry and click the "Accept" button.
- The SINAMICS drive is displayed as a drive object in the project tree.
- Further configurations can be performed for the drive object.
- Click "Connect to target system" and load the project to the Control Unit's memory card with Target system -> Load -> To target device.

Note

Storage location of the IP address

The IP address and device name for the Control Unit are stored on the memory card (non-volatile).

6.9.2 General information about PROFINET IO

6.9.2.1 General information about PROFINET IO for SINAMICS

General information

PROFINET IO is an open Industrial Ethernet standard for a wide range of production and process automation applications. PROFINET IO is based on Industrial Ethernet and observes TCP/IP and IT standards.

Deterministic signal processing in real time is important in industrial networks. PROFINET IO satisfies these requirements.

International standard IEC 61158 ensures open, multi-vendor systems

PROFINET IO is optimized for high-speed, time-critical data communication at field level.

PROFINET IO

Within the context of Totally Integrated Automation (TIA), PROFINET IO is the systematic development of the following:

- PROFIBUS DP, the established fieldbus,
- Industrial Ethernet, the communications bus for the cell level.

Experience gained from both systems was integrated into PROFINET IO. As an Ethernet-based automation standard defined by PROFIBUS International (PROFIBUS user organization), PROFINET IO is a manufacturer-independent communication and engineering model.

PROFINET IO defines every aspect of the data exchange between IO controllers (devices with so-called "master functionality") and the IO devices (devices with so-called "slave functionality") as well as carrying out parameterization and diagnostics. A PROFINET IO system is configured in virtually the same way as a PROFIBUS system.

A PROFINET IO system is made up of the following devices:

- The IO controller controls automation tasks.
- An IO Device is controlled and monitored by an IO controller. An IO device can consist of several modules and submodules.
- An IO Supervisor is an engineering tool, typically based on a PC, with which the individual IO devices (drive unit) are parameterized and diagnosed.

IO devices: Drive units with PROFINET interface

- SINAMICS S150 with CU320-2 DP and inserted CBE20
- SINAMICS S150 with CU320-2 PN

With SINAMICS S150 and CBE20 or with CU320-2 PN, communication via PROFINET IO with RT is possible.

Cyclic communication using PROFINET IO with IRT or using RT is possible for all drive units equipped with a PROFINET interface. This means that error-free communication using other standard protocols is guaranteed within the same network.

Note

CU320-2 DP and inserted CBE20

The cyclic process data channel for PROFIBUS DP is initially deactivated for a CU320-2 DP and inserted CBE20. However, it can be reactivated with parameter p8839 = 1 at any time (see Chapter "Parallel operation of communication interfaces (Page 460)").

References

Note

PROFINET for drive technology is standardized and described in the following document:

- **PROFIBUS profile PROFIdrive – Profile Drive Technology**
  Version V4.2, October 2015
  PROFIBUS User Organization e. V.
  Haid-und-Neu-Strasse 7, D-76131 Karlsruhe, Germany
  http://www.profibus.com, Order Number 3.172
- IEC 61800-7

6.9.2.2 Real-time (RT) and isochronous real-time (IRT) communication

Real-time communication

When communication takes place via TCP/IP, the resultant transmission times may be too long and not defined to meet the production automation requirements. When communicating time-critical IO user data, PROFINET IO therefore uses its own real-time channel, rather than TCP/IP.

Real time means that a system processes external events over a defined period.

Determinism

Determinism means that a system will react in a predictable ("deterministic") manner.
With PROFINET IO with IRT, it is possible to precisely determine (predict) transmission times.

PROFINET IO with RT (Real Time)

Real-time data is treated with a higher priority than TCP(UDP)/IP data. Transmission of time-critical data takes place at guaranteed time intervals. RT communication is the basis for data exchange using PROFINET IO.

PROFINET IO with IRT (Isochronous Real Time)

Isochronous real time: Real time property of PROFINET IO where IRT telegrams are transferred deterministically via planned communication paths in a defined sequence to achieve the best possible synchronism and performance between the IO controller and IO device (drive unit). IRT is also known as time-scheduled communication whereby knowledge about the network structure (topology) is utilized. IRT requires special network components that support planned data transfer.

SINAMICS cycle times of minimum 250 µs (on-board) / 500 µs (CBE20) and a jitter accuracy of less than 1 µs can be achieved when this transmission method is implemented.

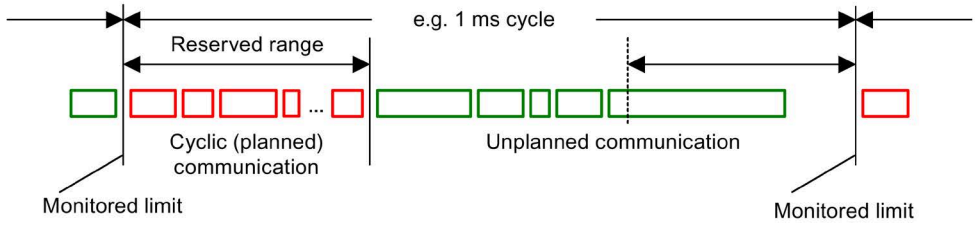

Figure 6-44 Bandwidth distribution/reservation, PROFINET IO

6.9.2.3 Addresses

MAC address

Every Ethernet and PROFINET interface is assigned a worldwide unique device identifier in the factory. This 6-byte long device identifier is the MAC address. The MAC address is divided up as follows:

- 3 bytes for the manufacturer's ID
- 3 bytes device identifier (consecutive number).

The MAC address is printed on a label (CBE20) or specified on the type plate (CU320-2 PN), e.g.: 08-00-06-6B-80-C0.

The Control Unit CU320-2 PN has two onboard interfaces:

- One Ethernet interface
- A PROFINET interface with two ports

The two MAC addresses of the Ethernet and PROFINET interfaces are stamped on the type plate.

IP address

The TCP/IP protocol is a prerequisite for establishing a connection and parameterization. For a PROFINET device to be addressed as a node on Industrial Ethernet, this device also requires an IP address that is unique within the network. The IP address is made up of 4 decimal numbers with a range of values from 0 to 255. The decimal numbers are separated by a decimal point. The IP address is made up as follows:

- Address of the station (also called host or network node)
- Address of the (sub)network

IP address assignment

The IP addresses of IO devices can be assigned by the IO controller and always have the same subnet mask as the IO controller. In this case, the IP address is not stored permanently. The IP address entry is lost after POWER ON/OFF. The IP address can be assigned retentively via the STARTER function "Accessible nodes".

This function can also be performed with HW Config of STEP 7. The function is called "Edit Ethernet node" here.

Note

IP addresses of the onboard interfaces

It is not permissible that the IP address band of the Ethernet interface and the PROFINET interface are the same. The factory setting of the IP address of the Ethernet interface X127 is 169.254.11.22; the subnet mask is 255.255.0.0.

Ethernet interface X127 is intended for commissioning and diagnostics.

Do not use this interface for other purposes and ensure that X127 is always accessible (e.g. for service).

Note

Part of a company network

If the network is part of an existing Ethernet company network, obtain the information (IP address) from your network administrator.

Device name (NameOfStation)

When it is shipped, an IO device does not have a device name. An IO device can only be addressed by an IO controller, for example, for the transfer of project engineering data (including the IP address) during startup or for user data exchange in cyclic operation, after it has been assigned a device name with the IO supervisor.

Note

Save device name retentively

The device name must be stored retentively using either STARTER or with the hardware Config of STEP 7.

Note

Address information for interfaces

The address data for the corresponding interfaces can be entered in STARTER in the expert list using the following parameters:

- Ethernet interfaces X127:
  Parameters p8901, p8902 and p8903
- Internal PROFINET interfaces X150 P1 and P2:
  Parameters p8921, p8922 and p8923
- Interfaces of the optional CBE20 module:
  Parameters p8941, p8942 and p8943

Activating the interface configuration and saving it in non-volatile memory

To activate the interface configuration and save it in non-volatile memory, use the following parameter settings:

- X127 Ethernet interfaces: p8905 = 2
- Internal PROFINET interfaces X150 P1 and P2: p8925 = 2
- Interfaces of the optional CBE20 module (X1400): p8945 = 2

Replacing Control Unit (IO device)

If the IP address and device name are stored in non-volatile memory, this data is also transferred with the memory card of the Control Unit. The memory card allows a module to be replaced without an IO supervisor when a fault occurs in a PROFINET device.

If a complete Control Unit needs to be replaced due to a device or module defect, the new Control Unit automatically performs parameterization and configuration using the data on the memory card. Following this, cyclic exchange of user data is restored.

6.9.2.4 Dynamic IP address assignment

In those cases in which the PROFINET interface is not used for the IO communication, it is possible to generate an IP address centrally using a DHCP (DHCP = Dynamic Host Configuration Protocol) server. The following requirements must be satisfied to do this:

- At least one DHCP server must be active.
- The PG/PC and the SINAMICS devices must be connected to the same physical Ethernet subnet.

Note

DHCP is not supported together with PROFINET. No cyclical connection is established for an activated DHCP. It is therefore recommended that DHCP not be used within PROFINET networks!

The DHCP address assignment can be set from the SIMATIC Manager or using SINAMICS parameters.

Setting the DHCP address assignment with SIMATIC Manager (STEP 7)

1. Call the "Target system > Edit Ethernet node" menu path in the SIMATIC Manager.
2. Click the "Search" button in the "Ethernet nodes" area.
3. Select the desired SINAMICS device.

   You can now specify in the "Edit Ethernet nodes" configuration dialog that a dynamic IP address will be generated via a DHCP server. The IP address can be identified in two ways:

   – MAC address
   – Device name (name of station)

   The "MAC address" option has the disadvantage that the MAC addresses are no longer correct after a device has been replaced.
4. Click the "Obtain the IP address from a DHCP server" option in the dialog to activate.
5. Activate either the "MAC address" or the "Device name" option in the "Identified via" area.
6. Click "Assign IP configuration".

   The IP address is then taken from the DHCP server. The SINAMICS device uses the associated setting after a POWER ON to obtain a new IP address from the DHCP server.

Setting the DHCP address assignment with SINAMICS parameters

The DHCP address assignment can also be initiated using SINAMICS parameters. In this case, the Control Unit always retrieves the IP address from a DHCP server after each POWER ON.

1. Activate the DHCP address assignment using one of the following settings (where the values 2 and 3 mean "MAC address" and "Device name", respectively):
   - For Ethernet onboard (X127): p8904 = 2 or 3
   - For PROFINET onboard: p8924 = 2 or 3
   - For CBE20 (X1400): p8944 = 2 or 3

   The DHCP server now temporarily assigns an IP address.
2. You can now activate the interface configuration (value of 1) or activate and save retentively (value of 2). Make one of the following settings:
   - For Ethernet onboard (X127): p8905 = 1 or 2
   - For PROFINET onboard: p8925 = 1 or 2 (applies only to SINAMICS S120 devices)
   - For CBE20 (X1400): p8945 = 2

     Direct activation is not possible for the CBE20. The configuration can only be saved. The setting then becomes automatically active for the next POWER ON.

6.9.2.5 DCP flashing

This function is used to check the correct assignment to a module and its interfaces. This function is supported by a CU320-2 DP/PN with inserted CBE20. The function can also be used without CBE20 in a CU320-2 PN.

Activating DCP flashing:

1. In HW Config or the STEP 7 Manager, select the menu item "Target system > Ethernet > Edit Ethernet node".

   The "Edit Ethernet Node" dialog box opens.
2. Click the "Browse" button.

   The "Browse Network" dialog box opens and displays the connected nodes.
3. Select the CU320-2 PN or the CU320-2 DP when a CBE20 is inserted as node.

   The "DCP flashing" function is then activated via the "Flash" button.

The DCP flashing is switched to the RDY LED (READY LED 2 Hz, green/orange or red/orange) on the CU320-2 DP.

The LED will continue to flash as long as the dialog is open. When the dialog box is closed, the LED automatically goes dark.

6.9.2.6 Data transmission

Properties

The PROFINET interface on a drive unit supports the simultaneous operation of:

- IRT – isochronous real-time Ethernet
- RT – real-time Ethernet
- Standard Ethernet services (TCP/IP, LLDP, UDP and DCP)

PROFIdrive telegram for cyclic data transmission, acyclic services

PROFIdrive telegrams are available for implementing cyclic communication via PROFINET IO.

Telegrams to send and receive process data are available for each drive object of a drive unit with cyclic process data exchange. In addition to cyclic data transfer, acyclic services can also be used for parameterizing and configuring the drive unit. These acyclic services can be utilized by the IO supervisor or IO controller.

Sequence of drive objects in the telegram

On the drive side, the sequence of drive objects in the telegram is displayed via a list in p0978[0...24] where it can also be changed.

Using the STARTER commissioning tool you can display the sequence of drive objects for a commissioned drive system in the project navigator under "Drive unit" **>** "Communication" > "Telegram configuration".

When you create the configuration on the controller side (e.g. HW Config), the process-data-capable drive objects for the application are added to the telegram in the sequence shown (see above).

The following drive objects can exchange process data:

- Active Infeed (A_INF)
- Basic Infeed (B_INF)
- Control Unit (CU_S)
- ENC
- Smart Infeed (S_INF)
- SERVO
- Terminal Board 30 (TB30)
- Terminal Module 15 (TM15)
- Terminal Module 31 (TM31)
- Terminal Module 41 (TM41)
- Terminal Module 120 (TM120)
- Terminal Module 150 (TM150)
- VECTOR

Note

The order of the drive objects

The sequence of drive objects in HW Config must be the same as that in the drive (p0978).

Drive objects after the first zero in p0978 must not be configured in the HW Config.

The structure of the telegram depends on the drive objects taken into account during configuration. Configurations are permitted that do not take into account all of the drive objects that are present in the drive system.

Example:

The following configurations, for example, are possible:

- Configuration with VECTOR, VECTOR, VECTOR
- Configuration with A_INF, VECTOR, VECTOR, VECTOR, TMB31
- and additional etc.

6.9.2.7 Communication channels

PROFINET connection channels

- A Control Unit has an integrated Ethernet interface (X127).
- The Control Unit CU320-2 PN has a PROFINET interface (X150) with two ports onboard: P1 and P2.
- A Control Unit CU320-2 PN can establish a total of 8 acyclic connections simultaneously via the integrated PROFINET interfaces.

Note

Using interface X127 LAN (Ethernet)

Ethernet interface X127 is intended for commissioning and diagnostics, which means that it must always be accessible (e.g. for service).

Further, the following restrictions apply to X127:

- Only local access is permissible.
- Either no networking or only local networking in a closed and locked electrical cabinet is permissible

If it is necessary to remotely access the electrical cabinet, then additional security measures must be applied so that misuse through sabotage, data manipulation by unqualified persons and intercepting confidential data is completely ruled out.

Control Unit with CBE20

The CBE20 Communication Board can be optionally inserted into Control Unit CU320-2 PN or CU320-2 DP:

- The CBE20 Communication Board is a PROFINET switch with 4 additional PROFINET ports.

Note

PROFINET routing

Routing is neither possible between the onboard interfaces X127 and X150 of the CU320-2 PN, nor between the onboard interfaces of the CU320-2 PN and an inserted CBE20.

6.9.3 Communication with CBE20

6.9.3.1 Selecting the CBE20 firmware

The CBE20 is a Communication Board that can be flexibly used and which can be operated with different communication profiles. Only one firmware of a communication profile can be loaded at any one time. The available firmware files are saved with the communication profiles in UFW files on the Control Unit memory card.

The required file is selected using parameter p8835. A POWER ON must be carried out after selecting the required UFW file. During the subsequent system boot, the corresponding UFW file is loaded. The new selection then becomes active.

Table 6- 30 Functionality and selection in the pointer file

Functionality (p8835)	Pointer file content
PROFINET device	1
PN Gate	2
SINAMICS Link	3
EtherNet/IP	4
Customer-specific[1)]	99

[1)] Path for the UFW file and folders on the memory card: /OEM/SINAMICS/CODE/CB/CBE20.UFW

Identification of the firmware version

Using parameter r8858, the loaded firmware version of the PROFINET interface can be identified uniquely.

Parameter

- p8835 CBE20 firmware selection
- r8858[0...39] COMM BOARD read diagnostics channel
- r8859[0...7] COMM BOARD identification data

6.9.3.2 EtherNet/IP

SINAMICS S120 supports the communication with the fieldbus EtherNet Industrial Protocol (EtherNet/IP or also EIP). EtherNet/IP is an open standard based on Ethernet, which is predominantly used in the automation industry. EtherNet/IP is supported by the Open DeviceNet Vendor Association (ODVA).

For communication with EtherNet/IP, an Ethernet CBE20 option board is required. By setting p8835 = 4, you can choose the communication profile EtherNet/IP. The profile becomes active after POWER ON.

6.9.4 PROFINET media redundancy

To increase the availability of PROFINET, you can create a ring topology. If the ring is interrupted at one point, the data paths between the devices are automatically reconfigured. After reconfiguration, the devices can be re-accessed in the new topology that is created.

To create a ring topology with media redundancy, route the two ends of a line-type PROFINET topology to a switch which serves as redundancy manager (e.g. a suitable SCALANCE switch). Closing the linear bus topology is realized using 2 ports (ring ports) of the SCALANCE redundancy manager, which monitors the data telegrams in the PROFINET ring. All other connected PROFINET nodes are redundancy clients.

The Media Redundancy Protocol (MRP) is the standard procedure for media redundancy. Using this procedure, a maximum of 50 devices can participate in each ring. In the case of an interrupted cable, data transfer is only briefly interrupted as the system switches over to the redundant data path.

If a short-term interruption is not permitted, data transfer must be set to IRT High Performance. The uninterruptible MRRT is then automatically set. A SIMOTION controller (or another suitable controller) is required in this case.

The two integrated PROFINET IO interfaces of the Control Units CU320-2 PN can be configured as redundancy clients.

For a CBE20, only the first two ports are capable of establishing a ring topology. Routing between the integrated PROFINET IO interfaces and a CBE20 is not possible.

6.9.5 PROFINET system redundancy

6.9.5.1 Overview

Redundant systems can be created when using the SINAMICS PROFINET Control Unit CU320-2 PN.

The precondition for system-redundant systems is what is known as an H system. The H-system consists of 2 fault-tolerant controls (master and reserve CPU), which are constantly synchronized via fiber-optic cables. If one controller fails, the other automatically takes on the job. This reduces system downtimes.

Preconditions

- SIMATIC controller S7-400H with two PROFINET H-CPUs type 41xH
- SINAMICS drive with a PROFINET Control Unit (CU320-2 PN)
- Redundant communication links

Benefits

- No system downtime in the case of a controller failure
- Component replacement possible during ongoing operation
- Configuration changes possible during ongoing operation
- Automatic synchronization after replacing components

Restrictions

- IRT is not supported.
- No simultaneous operation of Shared Device and system redundancy.
- Maximum 2 cyclic PROFINET connections.
- System redundancy is only possible via the onboard interface of SINAMICS PROFINET Control Unit (CU320-2 PN)
- For the duration of switching from one controller to the other, the setpoints of the last connection remain frozen and valid.

6.9.5.2 Design, configuring and diagnostics

Configuration

The figure below shows a sample structure of a system-redundant controller with 3 converters.

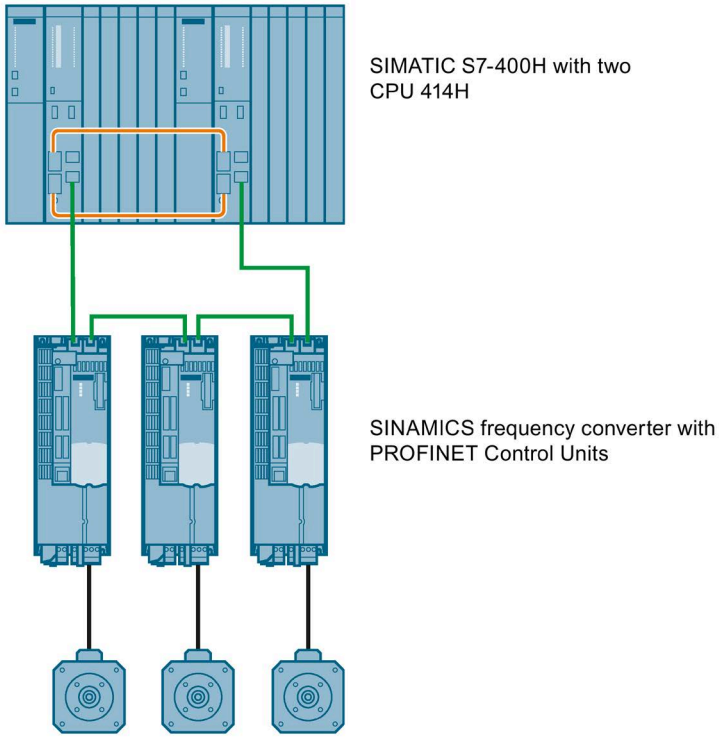

Figure 6-45 System redundancy with converters

Configuring

Configuring the redundancy takes place in STEP 7. In the converter, you only have to configure the communication via PROFINET.

System redundancy does not depend on the topology of the system.

Diagnostics LEDs

Diagnostics states are shown as follows using LEDs with PROFINET system redundancy:

Color	State	Significance
Green	Continuous light	2 redundancy connections available and setpoints are OK.
Green	Flashing light	Only one redundancy connection is available or setpoints are missing.
Red	Flashing light 2 Hz	No connection or setpoint failure (F01910).

Additional information

You can find further descriptions of the PROFINET system redundancy online in the following manuals:

- System manual "Fault-tolerant SIMATIC S7-400H systems"

  SIMATICS S7-400H Manual
  (https://support.industry.siemens.com/cs/ww/en/view/82478488)

- Application description Configuration examples for S7-400H PROFINET

  SIMATICS S7-400H configuration examples
  (https://support.industry.siemens.com/cs/ww/en/view/90885106)

6.9.5.3 Faults, alarms and parameters

Faults and alarms

- F01910 (N, A) Fieldbus: Setpoint timeout
- A01980 PN: Cyclic connection interrupted
- A01982 PROFINET: Second controller missing
- A01983 PROFINET: System redundancy switchover running

Parameter

- r2043.0...2 BO: IF1 PROFIdrive PZD status
- r8843.0...2 BO: IF2 PZD status
- r8936[0...1] PN state of the cyclic connection
- r8937[0...5] PN diagnostics
- r8960[0...2] PN subslot controller assignment
- r8961[0...3] PN IP Address Remote Controller 1
- r8962[0...3] PN IP Address Remote Controller 2

6.9.6 PROFIenergy

6.9.6.1 Description

PROFIenergy is an energy management system for production plants, based on the PROFINET communication protocol. The functionality is certified in the PROFIenergy profile of the PNO. Drive units which have PROFIenergy functionality, can be certified in an approved laboratory. Certified devices support the PROFIenergy commands and respond accordingly to the requirements and operating states.

SINAMICS supports the PROFIenergy profile V1.1. PROFIenergy commands are acyclically transferred from the controller to the drive with PROFINET data sets. The PROFIenergy commands are transferred using the PROFINET data set 0x80A0.

PROFIenergy data set access is only accepted via connection type "RT connection" or "IRT connection".

If access is made via another type of connection (e.g. a supervisor connection, system redundancy connection), accessing the data set is rejected with error code 0x80B0 "Invalid Index".

There is exactly one PROFIenergy access point (PESAP) and this is on the MAP submodule of the CU drive object.

If access is made via another module/submodule, the data set access is rejected with error code 0x80B0 "Invalid Index".

PROFIenergy properties of the SINAMICS drive system

SINAMICS drive system devices meet the following requirements:

- Certified for PROFIenergy
- PROFIenergy function unit Class 3
- PROFIenergy energy-saving mode 2

SINAMICS devices support the following PROFIenergy functions:

Functions		SINAMICS support								
		S120 SERVO	S120 VECTOR	S150	G110M	G120D	G120x (otherwise not G120D)	G130	G150	ET200 pro FC-2
Control commands		X	X	X	X	X	X	X	X	X
Query commands		X	X	X	X	X	X	X	X	X
Measured values	ID 34	X	X	X	X	X	X	X	X	X
	ID 166	–	X	X	X	X	X	X	X	X
	ID 200	X	X	X	X	X	X	X	X	X
Measuring value access		X	X	X	X	X	X	X	X	X
PROFIenergy energy-saving mode 1	Shutdown Digital outputs	–	–	–	–	X	–	–	–	–
	Shutdown Encoder	–	–	–	–	X	–	–	–	–
PROFIenergy energy-saving mode 2	Switch on interlocking	X	X	X	X	–	X	X	X	X
Inhibit PROFIenergy		X	X	X	X	X	X	X	X	X
PROFIenergy energy-saving mode in PROFIdrive state S3/S4		–	–	–	X	X	X	X	X	X

Figure 6-46 PROFIenergy functions

6.9.6.2 Tasks of PROFIenergy

PROFIenergy is a data interface based on PROFINET. It allows loads to be shut down during non-operational periods in a controlled fashion, and irrespective of the manufacturer and device. Consequently, the process should be given only the energy it actually requires. The majority of the energy is saved by the process, the PROFINET device itself contributes only a few watts to the saving potential.

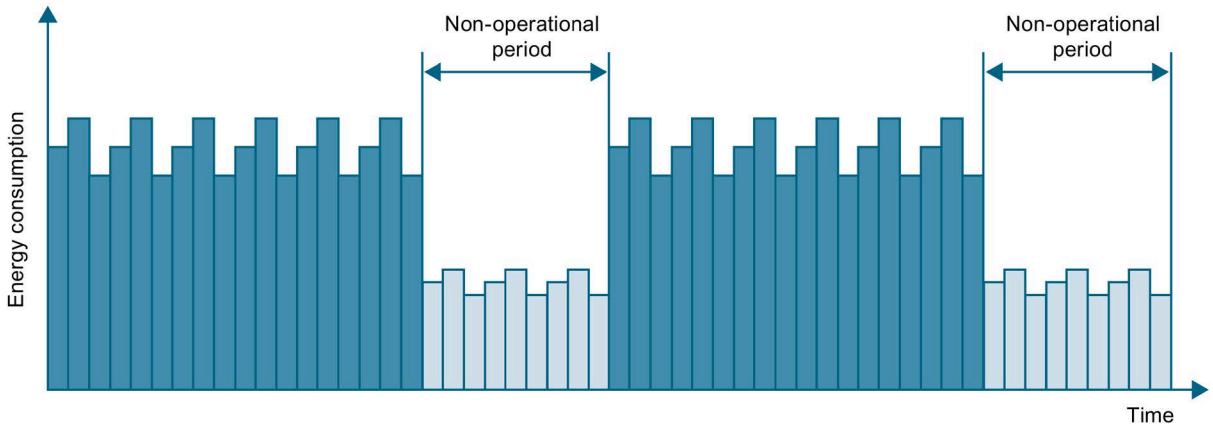

Figure 6-47 Energy saving during pauses with PROFIenergy

The following objectives are reached in detail by temporarily shutting down or stopping unused drives and equipment:

- Lower energy costs.
- Reduction of thermal emissions.
- Longer service life by reducing the effective operating times.
- The drive units provide standardized consumption data for analysis.
- The PROFIenergy state of the participating devices is displayed.
- The PROFIenergy state is available with BICO interconnections for further processing, e.g. to shutdown secondary systems that are not required.

Basics

The PROFINET devices and the power modules are shut down using special commands in the user program of the PROFINET IO controller. No additional hardware is required; the PROFIenergy commands are interpreted directly by the PROFINET devices.

6.9.6.3 PROFIenergy commands

Principle of operation

At the start and end of pauses, the plant or system operator activates or deactivates the pause function of the plant or system after which the IO controller sends the PROFIenergy "START_Pause" / "END_Pause" command to the PROFINET devices. The device then interprets the content of the PROFIenergy command and switches off or on again.

You can call up device information via additional PROFIenergy functions. You can use these to transfer the "START_Pause"/"END_Pause" command in plenty of time.

PROFIenergy control commands

Control command	Description
START_Pause	Switches from the operating state to the energy-saving mode depending on the pause duration. Switches from the energy-saving mode to the operating state depending on the pause duration.
START_Pause_with_time_response	Switches from the operating state to the energy-saving mode and also specifies the transition times in the command response.
END_Pause	Switches from the energy-saving mode to the operating state. Cancels a switch from the operating state to the energy-saving mode.

PROFIenergy query commands

Query command	Description
List_Energy_Saving_Modes	Determines all supported energy-saving modes.
Get_Mode	Determines the energy-saving mode.
PEM_Status	Determines the current PROFIenergy status.
PEM_Status_with_CTTO	Determines the actual PROFIenergy status, the same as for the command "PEM status" and in addition with the regular transition time to the operating state.
PE_Identify	Determines the supported PROFIenergy commands.
Query_Version	Shows the implemented PROFIenergy profile.
Get_Measurement_List	This command returns the measured value IDs that can be accessed using the "Get_Measurement_Values" command.
Get_Measurement_List_with_object_number	This command returns the measured value IDs and the associated object number that can be accessed using the "Get_Measurement_Values_with_object_number" command.
Get_Measurement_Values	The command returns the requested measured value using the measured value ID: • For power measured values: The command addresses the sum of the measured value over all control drive objects. • For energy measured values: The command returns the sum of the measured value over all control drive objects. • For power factors: This measured value is supported only for a SINAMICS with a control drive object.
Get_Measurement_Values_with_object_number	This command returns the requested measured values using the measured value ID and the object number. The object number corresponds to the drive object ID. The drive object ID of the Control Unit is used to address the measured values as with "Get_Measurement_Value".

6.9.6.4 PROFIenergy measured values

Table 6- 31 Overview of the PROFIenergy measured values

PROFIenergy measured value		PROFIenergy accuracy		Unit	SINAMICS source parameters		Value range
ID	Name	Domain	Class		Parameters	Name	
34	Active power	1	12	W	r0032	Active power smoothed	Largest value for r2004 of all drive objects
166	Power factor	1	12	1	r0038	Smoothed power factor	0 ... 1
200	Active energy import	2	11	Wh	r0039[1]	Energy accepted	-

6.9.6.5 PROFIenergy energy-saving mode

The drive devices support PROFIenergy energy-saving mode 2. The following two parameters indicate the effective PROFIenergy mode:

- Parameter r5600 indicates the currently active PROFIenergy mode.
- Using interconnectable bits, the r5613 parameter indicates whether the PROFIenergy energy saving is active.

Activating the energy saving mode

The energy-saving mode can activated or deactivated for the drive devices using the PROFIenergy control commands (see also PROFIenergy commands).

General converter behavior when in the PROFIenergy energy-saving mode

- When the PROFIenergy energy-saving mode is active, the converter issues alarm A08800.
- When the PROFIenergy energy-saving mode is active, the converter does not send any diagnostic alarms.
- When the PROFIenergy energy-saving mode is active, then the READY-LED flashes green in the on / off ratio: 500 ms on, 3000 ms off.
- If the bus connection to the control system is interrupted while the converter is in the energy-saving mode, the converter exits the energy-saving mode and resumes normal operation ("ready_to_operate").
- The converter changes into normal operation if the control system goes into the stop condition while the converter is in the energy-saving mode.

6.9.6.6 PROFIenergy inhibit and pause time

Inhibit PROFIenergy

If you set p5611.0 = 1, you inhibit the response of the converter to PROFIenergy control commands. In this case, the converter ignores the PROFIenergy control commands.

Pause time

- Minimum pause time: p5602
  - When the pause time, which is sent using command "Start_Pause", is equal to or greater than the value in p5602[1], then the converter goes into the energy-saving mode.
  - If the pause time is less than p5602[1], the converter ignores the command.
- Maximum duration: p5606

6.9.6.7 Function diagrams and parameters

Function diagram

FP 2381	PROFIenergy - Control commands / query commands
FP 2382	PROFIenergy - States
FP 2610	Sequence control - Sequencer

Parameter

- r5600 Pe hibernation ID
- p5602[0...1] Pe hibernation pause time, minimum
- p5606[0...1] Pe hibernation duration, maximum
- p5611 Pe energy-saving properties, general
- p5612[0...1] Pe energy-saving properties, mode-dependent
- r5613.0...1 CO/BO: Pe energy-saving active/inactive

6.9.7 Support of I&M data sets 1...4

Identification & Maintenance (I&M)

I&M data records contain information for a standardized and simplified identification and maintenance of PROFINET devices. I&M data sets 1...4 contain system-specific information, such as the installation location and date. PROFINET supports I&M data sets 0...4.

I&M data sets 1...3 can be set with the SIMATIC Manager (STEP 7) and also with HW Config (STEP 7).

I&M parameters

Table 6- 32 Parameter designation, assignment and meaning

I&M parameter designation	Format	Size/ octets	Initialization	SINAMICS parameters	Meaning
I&M 0: IM_SUPPORTED	-	-	-	r8820[62,63]	The parameter indicates which I&M data sets are supported. The value 0x1E indicates that I&M data sets 1...4 are available.
I&M 1: TAG_FUNCTION	Visible string	32	Space 0x20...0x20	p8806[0...31]	Text that identifies the function or task of the device.
I&M 1: TAG_LOCATION	Visible string	22	Space 0x20...0x20	p8806[32...53]	Text that identifies the device location.
I&M 2: INSTALLATION_DATE	Visible string	16	Space 0x20...0x7E	p8807[0...15]	Text with the date of the installation or the initial commissioning of the device. The following date formats are supported: • YYYY-MM-DD • YYYY-MM-DD hh:mm – YYYY: Year – MM: Month 01...12 – DD: Day 01...31 – hh: Hours 00...23 – mm: Minutes 00...59 The separators between the individual specifications, i.e. hyphen '-', blank ' ' and colon ':', must be entered.
I&M 3: DESCRIPTOR	Visible string	54	Space 0x20...0x20	p8808[0...53]	Text with any comments or notes.

I&M parameter designation	Format	Size/ octets	Initialization	SINAMICS parameters	Meaning
I&M 4: SIGNATURE	Octet string	54	Space 0x00...0x00	p8809[0...53]	The parameter can be filled automatically by the system, in which case it contains a standard value, namely, a functional check signature for the change tracking by Safety Integrated. The check signature has the following format: • The first four octets (0...3) contain the content of parameter r9781 index 0: "SI change monitoring checksum (Control Unit)". • The second four octets (4...7) contain the content of parameter r9782 index 0: "SI change monitoring time stamp (Control Unit)". • The remainder (octets 8...53) contains zeroes.

The I&M data sets 1...4 are stored permanently in parameters p8806...p8809. Significant properties of these four parameters:

- They can be displayed in the STARTER expert list.
- The SINAMICS "Reset parameter" (p0976 = 1, p0970 = 1) function does not have any effect on the content of parameters.
- I&M data sets are not changed when the alternative parameter sets are stored or loaded. The transfer of parameter sets between a memory card and non-volatile device memory does not have any effect on the I&M data sets.

Parameters

- p8805[0...1] Identification and Maintenance configuration
- p8806[0...53] Identification and Maintenance 1
- p8807[0...15] Identification and Maintenance 2
- p8808[0...53] Identification and Maintenance 3
- r8809[0...53] Identification and Maintenance 4

6.9.8 Further information about communication via PROFINET IO

Further information about communication via PROFINET IO

For more information about communication via PROFINET IO, refer to "Communication via PROFINET IO" in the accompanying "SINAMICS S120 Function Manual Communication".

6.10 Communication via SINAMICS Link

6.10.1 Basic principles of SINAMICS Link

SINAMICS Link allows data to be directly exchanged between a maximum of 64 Control Units (CU320-2 PN and CU320-2 DP). The participating Control Units must be equipped with the CBE20 supplementary module. Other nodes cannot be integrated into this communication.

Possible applications include e.g.:

- Torque distribution for n drives
- Setpoint cascading for n drives
- Load distribution of drives coupled through a material web
- Master/slave function for infeed units

Preconditions

The following preconditions must be fulfilled to operate SINAMICS Link:

- r0108.31: Function module "PROFINET CBE20" must be activated.
- r2064[1]: The bus cycle time (T_{dp}) must be an integer multiple of p0115[0] (current controller cycle).
- r2064[2]: The master cycle time (T_{mapc}) must be an integer multiple of p0115[1] (speed control cycle).
- p0115[0]: The current controller clock cycle must be set to 250 µs or 500 µs. One clock cycle with 400 µs is not permitted. For 400 µs, alarm A01902 is output with alarm value "4". As countermeasure, set the current controller cycle with p0115[0] to 500 µs.

Send and receive data

The SINAMICS Link telegram contains 32 indices (0...31) for the process data (PZD1...32). Each PZD is precisely 1 word long (= 16 bits). Slots that are not required are automatically populated with "0". There is always a fixed assignment between the index and PZD: The index i always corresponds to PZD i+1.

Slot	0	1	2	3	4	5	6	7	8	9	10	11	12	13	14	15
PZD	1	2	3	4	5	6	7	8	9	10	11	12	13	14	15	16

SINAMICS Link telegram content, Part 1

Slot	16	17	18	19	20	21	22	23	24	25	26	27	28	29	30	31
PZD	17	18	19	20	21	22	23	24	25	26	27	28	29	30	31	32

SINAMICS Link telegram content, Part 2

Each transfer cycle, every SINAMICS Link node can send 1 telegram with 32 PZD. Each node receives all of the telegrams that are sent. For each transfer cycle clock, a node can select and process up to 32 PZD from all telegrams that have been received. Single words and double words can be sent and received. You must write double words in two consecutive PZD.

Limitations:

- In a telegram, a PZD may only be sent and received once. If a PZD occurs more than once in a telegram, then Alarm A50002 or A50003 is output.
- Reading in own send data is not possible; otherwise an appropriate alarm is output.
  - A50006: It is parameterized that own data sent can be received. This is not permitted.
  - A50007: The send telegram word is larger than possible in the project.
  - A50008: The receive telegram word is larger than possible in the project.
- The maximum number of PZD that can be received and sent also depends on the drive object. The number of PZDs that can be evaluated corresponds to communication according to PROFIdrive; however, for SINAMICS Link, it is limited to a maximum of 32 PZDs.
- If, as a result of a project download, parameters of the CBE20 are change, then alarm A08531 is output. In this case, a POWER ON is required to activate the values.

Transmission time

With SINAMICS Link, a transmission time of up to 500 µs is possible (with a max. controller cycle of 500 µs; synchronous bus cycle of 500 µs).

Bus cycle and number of nodes

You can operate the bus cycle of the SINAMICS Link with the current controller cycle, either synchronized or non-synchronized.

- You set synchronized operation with p8812[0] = 1. A maximum of 64 nodes can then communicate with one another via SINAMICS Link. To do so, set the maximum number of nodes with p8811 (project selection):

Number of nodes/ project no.	Number of PZD	Bus cycle (µs)
64	16	1000 or 2000
16	16	500
12	24	500
8	32	500

- A maximum of 64 participants can communicate with one another via SINAMICS Link.

If you change one of the parameters p8811, p8812, p8835 or p8836, then you must carry out a POWER ON to accept the settings.

6.10.2 Topology

Only a line topology with the following structure is permitted for SINAMICS Link.

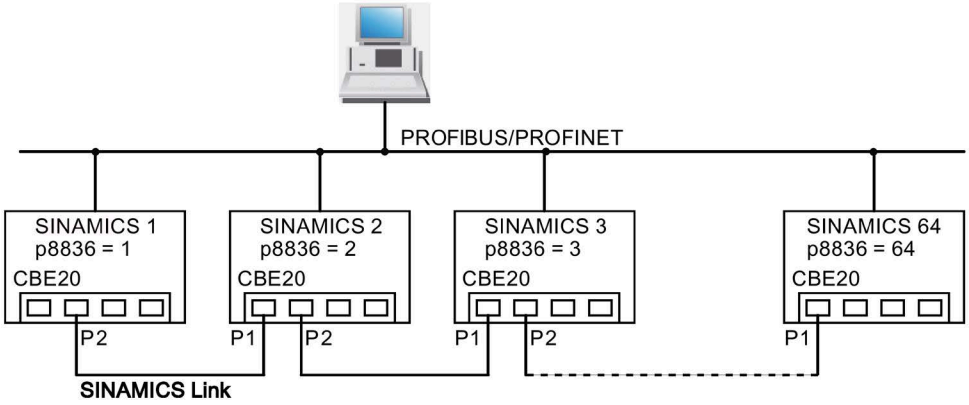

Figure 6-48 Maximum topology

Features

- The CBE20 can be assigned to IF1 or IF2 when SINAMICS Link is used.

  The interface, assigned to the CBE20, must be switched into synchronous operation if p8812[0] = 1 is set.

  You must also make the following parameter settings in order to assign, e.g. IF1 to SINAMICS Link:

  – For IF1: p8839[0] = 2 (COMM BOARD)

  – For IF2: p8839[1] = 1 (Control Unit onboard)

The following data is applicable for the case (IF1 ≙ SINAMICS Link):

- The number of the respective node must be entered manually in parameter p8836. A different number must be assigned for each node.
  Enter the numbers is ascending order, starting with "1".
- If p8836 is set to 0, the nodes and the complete following line is shut down for SINAMICS Link.
- Gaps in the numbering are not permitted, as then SINAMICS Link would not function.
- The node with the number 1 is automatically the sync master of the communication link.
- The ports of the CBE20 must be interconnected strictly in accordance with the above diagram. You must always connect port 2 (P2) of node n with port 1 (P1) of node n + 1.
- In the "SINAMICS Link" mode, ports 3 and 4 of the CBE20 can only be used in conjunction with the STARTER commissioning tool.

Corresponding parameters for IF1 or IF2

Use different parameters for configuring, depending on which interface SINAMICS Link is assigned:

Table 6- 33 Corresponding parameters for IF1 or IF2

Parameters	IF1	IF2
Setting of the processing mode for PROFIdrive STW1.10 "Control by PLC".	p2037	p8837
Connector output to interconnect the PZD (setpoints) received from the fieldbus controller in the word format.	r2050	r8850
Selects the PZD (actual values) to be sent to the fieldbus controller in the word format.	p2051	p8851
Displays the PZD (actual values) sent to the fieldbus controller in the word format.	r2053	r8853
Connector output to interconnect the PZD (setpoints) received from the fieldbus controller in the double word format.	r2060	r8860
Selects the PZD (actual values) to be sent to the fieldbus controller in the double word format.	p2061	p8861
Displays the PZD (actual values) sent to the fieldbus controller in the double word format.	r2063	r8863

6.10.3 Configuring and commissioning

Commissioning

When commissioning, proceed as follows:

1. Set the Control Unit parameter p0009 = 1 (device configuration).
2. Set the Control Unit parameter p8835 = 3 (SINAMICS Link).
3. Using p8839, define which interface should be used (for example for IF1: p8839[0] = 2).
4. If SINAMICS Link is assigned to IF1, set parameter p2037 of the drive objects to 2 (do not freeze setpoints).

   If SINAMICS Link was assigned IF2, then p8837 must be used for the setting.
5. Assign the nodes in parameter p8836 to the SINAMICS Link node number.

   The first Control Unit is always assigned the number 1. Node number 0 means that for this Control Unit SINAMICS Link has been shut down. Observe the specifications under "Topology".
6. Check and/or correct the following parameters:
   - p8811 must be identical for all nodes
   - p8812[1] must be identical for all nodes
   - p8812[0] may be different for local nodes
7. Set the Control Unit parameter p0009 = 0 (ready).
8. Then execute a "Copy RAM to ROM".
9. Carry out a POWER ON (switch off the Control Unit and switch on again).

Sending data

Note

The parameters listed in the following description refer to the assignment of SINAMICS Link to IF1. If you assigned SINAMICS Link to IF2, then you find the corresponding parameters in the previous chapter.

In this example, the first "Control Unit 1" node has two drive objects, "Drive 1" and "Drive 2". Proceed as follows to send data:

1. If SINAMICS Link is assigned to IF1, then for each drive object, in its associated parameter p2051[0...31], you define which data (PZDs) should be sent.

   If SINAMICS Link was assigned IF2, then p8851 must be used for the setting. The data is simultaneously reserved in the send slot of the p8871[0...31].

2. Enter the double words in p2061[x].

   Double word data is simultaneously written to p8861[0...31].

3. For each drive object, allocate the send parameters in p8871[0...31] to a send slot of its own node.

Table 6- 34 Compile send data of drive 1 (DO2)

p2051[x] Index	p2061[x] Index	Contents	From parameter	Telegram word p8871
0	-	ZSW1	r0899	1
-	1	Actual speed value part 1	r0061[0]	2
-		Actual speed value part 2		3
-	3	Actual torque value part 1	r0080	4
-		Actual torque value part 2		5
5	-	Actual fault code	r2131	6
6	-	0	0	0
...	-	...	-	...
15	-	0	0	0
...	-	...	-	...
31	-	0	0	0

Table 6- 35 Compile send data of drive 2 (DO3)

p2051[x] Index	p2061[x] Index	Contents	From parameter	Slots in the send buffer p8871[x]	
				x	Telegram word
-	-	-	-	0...5 [1]	0
0	-	ZSW1	r0899	6	7
-	1	Actual speed value part 1	r0061[0]	7	8
-		Actual speed value part 2		8	9
-	3	Actual torque value part 1	r0080	9	10
-		Actual torque value part 2		10	11
5	-	Actual fault code	r2131	11	12
6	-	0	0	12	0
...		...		...	...
15	-	0	0	15	0
...		...		...	...
31	-	0	0	31	0

[1] 0...5 here remain free, as they are already assigned by DO2.

Table 6- 36 Compile send data of Control Unit 1 (DO1)

p2051[x] Index	p2061[x] Index	Contents	From parameter	Slots in the send buffer p8871[x]	
				x	Telegram word
-	-	-	-	0...11 [1]	0
0	-	Control word, faults/alarms	r2138	12	13
-	1	Missing enables part 1	r0046	13	14
-		Missing enables part 2		14	15
15	-	0	0	15	0
...		...		...	...
31	-	0	0	31	0

[1] 0...11 here remain free, as they are already assigned by DO2 and DO3.

Send slots PZD 16 to 31 are not required for this telegram and are therefore filled with a zero.

1. For double words (e.g. 1 + 2), assign two consecutive send slots, e.g. p2061[1] => p8871[1] = PZD 2 and p8871[2] = PZD 3.
2. Enter the following PZD into the next parameter slots of p2051[x] or p2061[2x].
3. Populate the unused slots of p8871[0...31] with zeros.
4. The sequence of the PZDs in the send telegram of this node are defined in parameter p8871[0...31] by the entries in the required slots.

Receiving data

The sent telegrams of all nodes are simultaneously available at the SINAMICS Link. Each telegram has a length of 32 PZD. Each telegram has a marker of the sender. You select those PZD that you want to receive for the relevant node from all telegrams. You can process a maximum of 32 PZD.

Note

The first word of the receive data

If you have not deactivated the evaluation of bit 10 with p2037 = 2, the first word of the receive data (PZD 1) must be a control word, where bit 10 = 1 is set.

In this example, Control Unit 2 receives selected data from the telegram of Control Unit 1. Proceed as follows to receive data:

1. In parameter p8872[0...31] enter the address of the node for which you want to read one or more PZDs (e.g. p8872[3] = 1 → from node 1, read in PZD 4, p8872[15] = 0 → do not read in PZD 16).
2. After setting the parameters, using parameter r2050[0...31] or r2060[0...31] you can read out the values.

Table 6- 37 Receive data for Control Unit 2

From the sender		Receiver					
Transfer from	Phone Word [1] p8871[x]	Address p8872[x]	Receive buffer p8870[x]	Data transferred in		Parame-ters	Contents
				r2050[x]	r2060[x]		
p2051[0]	0	1	PZD 1	0	-	r0899	ZSW1
p2061[1]	1	1	PZD 2	-	1	r0061[0]	Actual speed value part 1
	2	1	PZD 3	-		r0061[0]	Actual speed value part 2
p2061[3]	3	1	PZD 4	-	3	r0080	Actual torque value part 1
	4	1	PZD 5	-			Actual torque value part 2
p2051[5]	5	1	PZD 6	5	-	r2131	Actual fault code
p2051[4]	6	1	PZD 7	6	-	r0899	ZSW1
p2061[5]	7	1	PZD 8	-	7	r0061[0]	Actual speed value part 1
	8	1	PZD 9	-			Actual speed value part 2
p2061[6]	9	1	PZD 10	-	9	r0080	Actual torque value part 1
	10	1	PZD 11	-			Actual torque value part 2
p2051[7]	11	1	PZD 12	11	-	r2131	Actual fault code
p2051[8]	12	1	PZD 13	12	-	2138	Control word, faults/alarms
p2061[9]	13	1	PZD 14	-	13	r0046	Missing enables part 1
	14	1	PZD 15	-			Missing enables part 2
-	15	0	PZD 16	15	-	0	Empty
...	...	...	...	...	...	...	...
-	31	0	PZD 32	31	0	0	-

[1] Tel. word = telegram word

Note

For double words, two PZD must be read in succession. To do this, read in a 32 bit setpoint, which is on PZD 2 + PZD 3 of the telegram of node 2. Emulate this setpoint on PZD 2 + PZD 3 of node 1:
p8872[1] = 2, p8870[1] = 2, p8872[2] = 2, p8870[2] = 3

Activating the SINAMICS Link

To activate SINAMICS Link connections, perform a POWER ON for all nodes.

Without POWER ON, the following can be changed:

- The assignments of p2051[x]/2061[2x] and the links of the read parameters r2050[x]/2060[2x]
- Changes to parameters p8870, p8871 and p8872. Here, SINAMICS Link connections can also be activated using p8842 = 1.

Settings for cabinet units with rated pulse frequency 1.25 kHz

For the following cabinet units with a rated pulse frequency of 1.25 kHz, in addition parameter p0115[0] must be set from 400 µs to 250 µs or 500 µs:

- 3 AC 380 to 480 V: All cabinet units with rated output current $I_N \geq 605$ A
- 3 AC 500 to 690 V: All cabinet units

Generally, the following conditions must be met:

1. r2064[1] bus cycle time (Tdp) must be an integer multiple of p0115[0] (current controller clock cycle).
2. r2064[2] master cycle time (Tmapc) must be an integer multiple of p0115[1] (speed controller cycle).

6.10.4 Example

Task

Configure SINAMICS Link for two nodes and transfer the following values:

- Send data from node 1 to node 2
  - r0898 CO/BO: Control word, sequence control, drive 1 (1 PZD), in the example PZD 1
  - r0079 CO: Total torque setpoint (2 PZD), in the example PZD 2
  - r0021 CO: Smoothed actual speed (2 PZD), in the example PZD 3
- Send data from node 2 to node 1
  - r0899 CO/BO: Status word, sequence control, drive 2 (1 PZD), in the example PZD 1
- IF1 is used for SINAMICS Link.

Procedure

1. For all nodes, set p0009 = 1 to change the device configuration.
2. For all CBE20 nodes, set the "SINAMICS Link" mode using p8835 = 3.
3. Limit the maximum number of nodes for all nodes with p8811 = 8. By setting p8811, parameter p8812[1] is preassigned, and parameter p8836, if necessary, is corrected.
4. Assign the node numbers for the devices involved:
   - Node 1 (≙ device 1): p8836 = 1
   - Node 2 (≙ device 2): p8836 = 2
5. Set all CBE20 to the isochronous mode by setting p8812[0] = 1.
6. Make the following interface setting for all nodes:
   - For IF1: p8839[0] = 2 (COMM BOARD)
   - For IF2: p8839[1] = 1 (Control Unit onboard)
7. For both nodes p0009 = 0, carry out a "Copy RAM to ROM" followed by a POWER ON in order to activate the modified firmware versions and the new settings in the CBE20.

8. Define the send data for node 1:
   - Define the PZD that participant 1 should send:
     p2051[0] = drive1:r0898 (PZD 1)
     p2061[1] = drive1:r0079 (PZD 2 + PZD 3)
     p2061[3] = drive1:r0021 (PZD 4 + PZD 5)
   - Place these PZD in the send buffer (p8871) of node 1:
     p8871[0] = 1 (r0898)
     p8871[1] = 2 (r0079 1st part)
     p8871[2] = 3 (r0079 2nd part)
     p8871[3] = 4 (r0021 1st part)
     p8871[4] = 5 (r0021 2nd part)
9. Define the receive data for node 2:
   - Specify that the data placed in the receive buffer p8872 of node 2 in locations 0 to 4 is received from node 1:
     p8872[0] = 1
     p8872[1] = 1
     p8872[2] = 1
     p8872[3] = 1
     p8872[4] = 1
   - Specify that PZD1, PZD2 and PZD3 of node 1 are to be placed in the receive buffer p8870 of node 2 in locations 0 to 4:
     p8870[0] = 1 (PZD1)
     p8870[1] = 2 (PZD2 1st part)
     p8870[2] = 3 (PZD2 2nd part)
     p8870[3] = 4 (PZD3 1st part)
     p8870[4] = 5 (PZD3 2nd part)
   - r2050[0], r2060[1] and r2060[3] subsequently contain (after step 13) the values of PZD 1, PZD 2 and PZD 3 of node 1.
10. Define the send data for node 2:
    - Specify the PZD that node 2 should send:
      :p2051[0] = drive1:r0899 (PZD length is 1 word)
    - Place this PZD in the send buffer (p8871) of node 2:
      p8871[0] = 1
11. Define the receive data for node 1:
    - Specify the data that should be placed in the receive buffer p8872 of node 1 in location 0, received from node 2:
      p8872[0] = 2
    - Define that PZD1 of node 2 is saved in the receive buffer p8870 of node 1 in location 0:
      p8870 [0] = 1
    - r2050[0] subsequently contains (after step 13) the value of PZD 1 of node 2.
12. At the two nodes carry-out a "Copy RAM to ROM" to backup the parameterization and the data.
13. Set p8842 =1, to activate parameters p8870, p8871 and p8872.

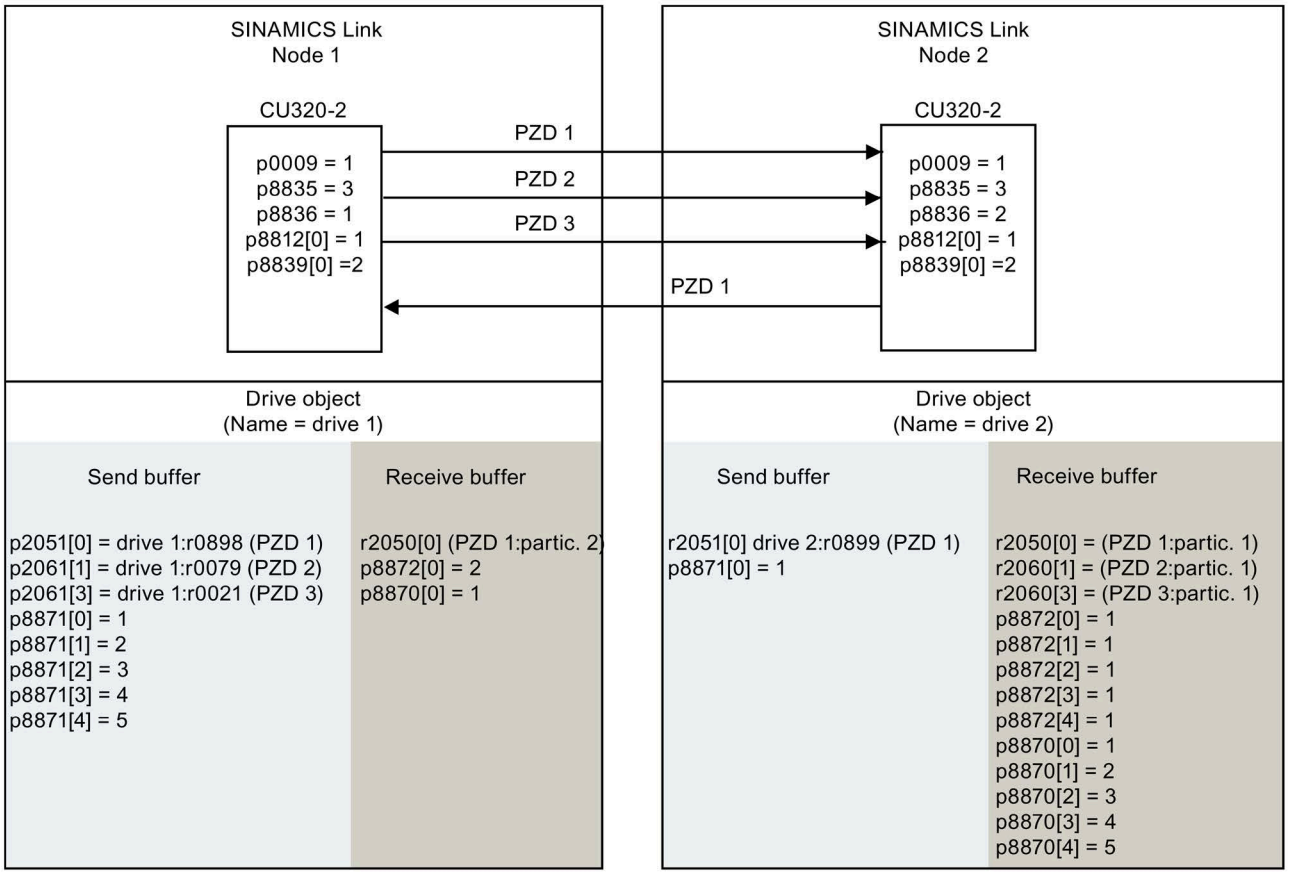

Figure 6-49 SINAMICS Link: Configuration example

6.10.5 Communication failure when booting or in cyclic operation

If at least one SINAMICS Link node does not correctly run up after commissioning or fails in cyclic operation, then alarm A50005 is output to the other nodes: "Sender was not found on SINAMICS Link".
The alarm value contains the number of the sender that was not found. The alarm is automatically canceled after the fault has been resolved at the node involved.

If several nodes are involved, the message occurs a multiple number of times consecutively with different node numbers. The alarm is automatically canceled after the fault has been resolved at the nodes involved.

When a node fails in cyclic operation, in addition to alarm A50005, fault F08501 is output: "COMM BOARD: Setpoint timeout".

Fault F08501 is not triggered at node 1. This node should be used for specifying setpoint values to other nodes.

6.10.6 Transmission times for SINAMICS Link

Transmission times at a communication cycle of 1 ms

p2048 or p8848 = 1 ms

Bus cycle [ms]	Transfer times [ms]			
	Sync both	Sync send	Sync receive	Async both
0.5	1.0	1.5	1.3	1.6
1.0	1.5	2.1	2.1	2.2
2.0	3.0	3.6	3.1	2.8

Transmission times at a communication cycle of 4 ms

p2048 or p8848 = 4 ms

Bus cycle [ms]	Transfer times [ms]			
	Sync both	Sync send	Sync receive	Async both
0.5	1.0	3.0	2.8	4.6
1.0	1.5	3.6	3.6	5.2
2.0	3.0	5.1	4.6	5.8

6.10.7 Function diagrams and parameters

Function diagram

FP 2197	Control Unit communication - SINAMICS Link overview (r0108.31 = 1, p8835 = 3)
FP 2198	Control Unit communication - SINAMICS Link configuration (r0108.31 = 1, p8835 = 3)
FP 2199	Control Unit communication - SINAMICS Link receive data (r0108.31 = 1, p8835 = 3)
FP 2200	Control Unit communication - SINAMICS Link send data (r0108.31 = 1, p8835 = 3)

Parameters

- r0108.31: Drive objects function module PROFINET CBE20
- p0115 Sampling time for additional functions
- p2037 IF1 PROFIdrive STW1.10 = 0 mode
- r2050[0...31] CO: IF1 PROFIdrive PZD receive word
- p2051[0...31] CI: IF1 PROFIdrive PZD send word
- r2060[0...30] CO: IF1 PROFIdrive PZD receive double word
- p2061[0...30] CI: IF1 PROFIdrive PZD send double word
- p8811 SINAMICS Link project selection
- p8812[0...1] SINAMICS Link cycle settings
- p8835 CBE20 firmware selection
- p8836 SINAMICS Link node address
- p8839[0...1] PZD interface hardware assignment
- p8870[0...31] SINAMICS Link PZD receive word
- p8871[0...31] SINAMICS Link PZD send word
- p8872[0...31] SINAMICS Link PZD receive address

6.11 Communication via EtherNet/IP

6.11.1 Overview

EtherNet/IP (short: EIP) is real-time Ethernet, and is mainly used in automation technology.

The EtherNet Industrial Protocol (EtherNet/IP) is an open standard for industrial networks. EtherNet/IP is used to transmit cyclic I/O data and acyclic parameter data. EtherNet/IP was developed by Rockwell Automation and the Open Device-Net Vendor Association (ODVA), and standardized in the series of international IEC 61158 standards. EtherNet/IP uses the basis technology of Ethernet TCP/IP, which has been well proven in practice. Ethernet twisted-pair cables or fiber-optic cables are used as data transmission medium. The CIP protocol (Common Industrial Protocol) – known from DeviceNet and ControlNet – is used as application protocol.

General information about communication

Communication via EIP requires the following interfaces:

- The Ethernet interface (X1400) of the Ethernet CBE20 option board
- The onboard PROFINET interface (X150) at the CU320-2 PN Control Units

The interfaces are either individually available at the different Control Units, or together at one Control Unit (e.g. at a CU320-2 PN with CBE20).

The following table provides an overview of the configurable Control Units and interfaces that are available for communication via EIP.

Table 6- 38 Configurable Control Units and interfaces

Control Unit	EIP via X150	EIP via X1400 (CBE20)
CU320-2 PN	Yes	No
CU320-2 PN with CBE20 (optional)	Yes	Yes
CU320-2 DP with CBE20	No	Yes

Independent of the configuration, only one interface can be assigned for communication via EIP. A simultaneous connection via the interfaces X150 and X1400 is not possible and is acknowledged with alarm A08555(1).

6.11.2 Connect drive device to Ethernet/IP

In order that your drive can be connected to a control system via Ethernet, your control system requires a generic I/O module for cyclic communication via Ethernet/IP. You manually create this generic I/O module in the control system.

Create generic I/O module and connect the drive to the control system

To connect the drive to a control system via Ethernet, proceed as follows:

1. Connect the drive to the control system via an Ethernet cable.
2. In your control, create a generic I/O module with EtherNet/IP functionality:
   - Insert a new module in your control system.
   - Select a generic Ethernet module from the selection.
   - Enter the network parameters for the newly inserted module (IP address, subnet mask, standard gateway, station name).
3. For the generic I/O module, enter the lengths of the process data for cyclic communication, which you have selected in STARTER, r2067[0] (input), r2067[1] (output), for example: Standard telegram 2/2.

   In the STARTER telegram configuration, read out the length of the process data for all drive objects (for input and output) - and add them (see PROFIdrive "Telegrams and process data (Page 349)").

   - Input 101:
     Here, enter the sum of all input process data of your drive objects from STARTER.
   - Output 102:
     Here, enter the sum of all output process data of your drive objects from STARTER.
   - Configuration 103:
     Here, you generally enter the value 0 or 1.
   - 4 ms is supported as the minimum value for RPI (Requested Packet Interval).
4. In STARTER, set the same values for IP address, subnet mask, standard gateway and the name station as in the control system (see Chapter "Configuring communication (Page 430)").

Furthermore, you can find a detailed description of how to create a generic I/O module on the following Internet page:
(Creating a generic I/O module
(https://support.industry.siemens.com/cs/ww/en/view/92045369)).

Routing and shielding Ethernet cables

You can find information on how to do this on the Internet page of "Open Device-Net Vendor Association (ODVA)":
Ethernet IP (https://www.odva.org/Publication-Download).

Commissioning the drive in an EtherNet/IP network

To commission the drive, connect the drive via an interface (depending on the Control Unit type: PROFIBUS, PROFINET, Ethernet, etc) with your computer, on which STARTER with version ≥ 4.5 is installed.

6.11.3 Configuring communication

Requirements for communication

Check the communication settings using the following questions. If you answer "Yes" to the questions, you have correctly set the communication settings and can control the drive via the fieldbus.

- Is the drive correctly connected to EtherNet/IP?
- Has a generic module been created in your control system?
- Have the bus interface and IP address been correctly set?
- Have the signals that the drive and the control system exchange been correctly interconnected?

Configuring EtherNet/IP via the onboard PROFINET X150 interface

To communicate with a higher-level control via EtherNet/IP, make the following settings for the PROFINET interface at the CU320-2 PN:

1. With p2030 = 10, set the firmware version of "EtherNet/IP".
2. Set the IP address using p8921.

   You can find the currently valid address in r8931.
3. Set the subnet mask using p8923.

   You can find the currently valid subnet mask in r8933.
4. Set the standard gateway using p8922.

   You can find the currently valid standard gateway in r8932.
5. Set the station name using p8920.

   You can find the currently valid station name in r8930.
6. Select the setting "Save and activate configuration" as interface configuration using p8925 = 2.
7. Save the data using command "Copy RAM to ROM".

   Then switch off the drive power supply.
8. Carry out a POWER ON (switch off the Control Unit and switch on again).

   Wait until all LEDs on the drive are dark before switching on. Your settings become active after switching on.

Configuring EtherNet/IP via interface X1400 at the CBE20

To communicate with a higher-level control via EtherNet/IP, make the following settings for the CBE20:

1. With p8835 = 4, set the firmware version of "EtherNet/IP".
2. Using p8941, set the IP address for the CBE20.

   You can find the currently valid address in r8951.

3. Set the subnet mask using p8943.

   You can find the currently valid subnet mask in r8953.
4. Set the standard gateway using p8942.

   You can find the currently valid standard gateway in r8952.
5. Set the station name using p8940.

   You can find the currently valid station name in r8950.
6. Select the setting "Save and activate configuration" as interface configuration using p8945 = 2.
7. Save the data using command "Copy RAM to ROM".

   Then switch off the drive power supply.
8. Carry out a POWER ON (switch off the Control Unit and switch on again).

   Wait until all LEDs on the drive are dark before switching on. Your settings become active after switching on.

6.11.4 Supported objects

Overview

Object class		Object name	Objects required	SINAMICS objects
hex	dec			
1 hex	1	Identity object	x	-
4 hex	4	Assembly Object	x	-
6 hex	6	Connection Management Object	x	-
32C hex	812	Siemens Drive Object	-	x
32D hex	813	Siemens Motor Data Object	-	x
F5 hex	245	TCP/IP Interface Object [1)]	x	-
F6 hex	246	Ethernet Link Object [1)]	x	-
300 hex	768	Stack Diagnostic Object	-	x
302 hex	770	Adapter Diagnostic Object	-	x
303 hex	771	Explicit Messages Diagnostic Object	-	x
304 hex	772	Explicit Message Diagnostic List Object	-	x
401 hex	1025	Parameter object	-	x
402 hex ... 43E hex	1026 ... 1086	Parameter object	-	x

[1)] These objects are part of the Ethernet/IP system management.

For Assembly Object "4 hex" you define the data length. Assembly Object is assigned a cycle in the control system.

Identity Object, Instance Number: 1 hex

Supported services

Class
- Get Attribute all
- Get Attribute single

Instance
- Get Attribute all
- Get Attribute single
- Reset

Table 6- 39 Class Attribute

No.	Service	Type	Name
1	get	UINT16	Revision
2	get	UINT16	Max Instance
3	get	UINT16	Num of Instances

Table 6- 40 Instance Attribute

No.	Service	Type	Name	Value/explanation
1	get	UINT16	Vendor ID	1251
2	get	UINT16	Device Type - Siemens Drive	0C hex
3	get	UINT16	Product code	r0964[1]
4	get	UINT16	Revision	
5	get	UINT16	Status	See the following table
6	get	UINT32	Serial number	Bits 0 ... 19: consecutive number; bits 20 ... 23: Production identifier bits 24 ... 27: Month of manufacture (0 = Jan, B = Dec) Bits 28 ... 31: Year of manufacture (0 = 2002)
7	get	Short String	Product name	Max. length 32 bytes

Table 6- 41 Explanation for No. 5 of the previous table

Byte	Bit	Name	Description
1	0	Owned	0: Converter is not assigned to a controller 1: Converter is assigned to a controller
	1		Reserved
	2	Configured	0: EtherNet/IP basic settings 1: Modified EtherNet/IP settings
	3		Reserved
	4 ... 7	Extended Device Status	0: Self-test or status not known 1: Firmware update active 2: At least one I/O connection with error 3: No I/O connections 4: Incorrect configuration in the ROM 5: Fatal fault 6: At least one I/O connection is active 7: All I/O connections in the quiescent state 8 ... 15: Reserved
2	8 ... 11		Not used
	12 ... 15		Reserved

Assembly Object, Instance Number: 4 hex

Supported services

Class
- Get Attribute single

Instance
- Get Attribute single
- Set Attribute single

Table 6- 42 Class Attribute

No.	Service	Type	Name
1	get	UINT16	Revision
2	get	UINT16	Max Instance
3	get	UINT16	Num of Instances

Table 6- 43 Instance Attribute

No.	Service	Type	Name	Value/explanation
3	get	Array of UINT8	Assembly	1 byte array

Connection Management Object, Instance Number: 6 hex

Supported services

Class
- Get Attribute all
- Get Attribute single

Instance
- Forward open
- Forward close
- Get Attribute single
- Set Attribute single

Table 6- 44 Class Attribute

No.	Service	Type	Name
1	get	UINT16	Revision
2	get	UINT16	Max Instance
3	get	UINT16	Num of Instances

Table 6- 45 Instance Attribute

No.	Service	Type	Name	Value/explanation
1	get	UINT16	OpenReqs	Counters
2	get	UINT16	OpenFormat Rejects	Counters
3	get	UINT16	OpenResource Rejects	Counters
4	get	UINT16	OpenOther Rejects	Counters
5	get	UINT16	CloseReqs	Counters
6	get	UINT16	CloseFormat Rejects	Counters
7	get	UINT16	CloseOther Rejects	Counters
8	get	UINT16	ConnTimeouts	Counters Number of bus errors

Siemens Drive Object, Instance Number: 32C hex

Supported services

Class
- Get Attribute single

Instance
- Get Attribute single
- Set Attribute single

Table 6- 46 Class Attribute

No.	Service	Type	Name
1	get	UINT16	Revision
2	get	UINT16	Max Instance
3	get	UINT16	Num of Instances

Table 6- 47 Instance Attribute

No.	Service	Name	Value/explanation
2	get, set	Commisioning state	p0010: commissioning parameter filter
3 ... 18	get	STW1	STW1 bit-by-bit access: Attr. 3 = STW1.0 Attr. 18 = STW1.15
19	get	Main setpoint	Main setpoint
20 ... 35	get	ZSW1	ZSW1 bit-by-bit access: Attr. 20 = ZSW1.0 Attr. 35 = ZSW1.15
36	get	Actual Frequency	Main actual value (actual frequency)
37	get, set	Ramp Up Time	p1120[0]: ramp-function generator ramp-up time
38	get, set	Ramp Down Time	p1121[0]: ramp-function generator ramp-down time
39	get, set	Current Limit	p0640[0]: Current limit
40	get, set	Frequency MAX Limit	p1082[0]: Maximum speed
41	get, set	Frequency MIN Limit	p1080[0]: minimum speed
42	get, set	OFF3 Ramp Down Time	p1135[0]: OFF3 ramp-down time
43	get, set	PID Enable	p2200[0]: Technology controller enable
44	get, set	PID Filter Time Constant	p2265: Technology controller actual value filter time constant
45	get, set	PID D Gain	p2274: technology controller differentiation time constant
46	get, set	PID P Gain	p2280: technology controller proportional gain
47	get, set	PID I Gain	p2285: technology controller integral time
48	get, set	PID Up Limit	p2291: technology controller maximum limiting
49	get, set	PID Down Limit	p2292: technology controller minimum limiting
50	get	Speed setpoint	r0020: speed setpoint
51	get	Output Frequency	r0024: output frequency
52	get	Output Voltage	r0025: output voltage
53	get	DC Link Voltage	r0026[0]: DC link voltage
54	get	Actual Current	r0027: current actual value
55	get	Actual Torque	r0031: actual torque value
56	get	Output power	r0032: active power actual value

No.	Service	Name	Value/explanation
57	get	Motor Temperature	r0035[0]: motor temperature
58	get	Power Unit Tempera-ture	r0037[0]: power unit temperature
59	get	Energy kWh	r0039: energy display
60	get	CDS Eff (Local Mode)	r0050: active command data set
61	get	Status Word 2	r2089[1]: status word 2
62	get	Control Word 1	r0054: control word 1
63	get	Motor Speed (Encoder)	r0061: Actual speed value
64	get	Digital Inputs	r0722: Digital inputs status
65	get	Digital Outputs	r0747: digital outputs status
66	get	Analog input 1	r0752[0]: analog input 1
67	get	Analog input 2	r0752[1]: analog input 2
68	get	Analog output 1	r0774[0]: analog output 1
69	get	Analog output 2	r0774[1]: analog output 2
70	get	Fault Code 1	r0947[0]: fault number 1
71	get	Fault Code 2	r0947[1]: fault number 2
72	get	Fault Code 3	r0947[2]: fault number 3
73	get	Fault Code 4	r0947[3]: fault number 4
74	get	Fault Code 5	r0947[4]: fault number 5
75	get	Fault Code 6	r0947[5]: fault number 6
76	get	Fault Code 7	r0947[6]: fault number 7
77	get	Fault Code 8	r0947[7]: fault number 8
78	get	Pulse Frequency	r1801: pulse frequency
79	get	Alarm Code 1	r2110[0]: alarm number 1
80	get	Alarm Code 2	r2110[1]: alarm number 2
81	get	Alarm Code 3	r2110[2]: alarm number 3
82	get	Alarm Code 4	r2110[3]: alarm number 4
83	get	PID setpoint Output	r2260: technology controller setpoint after ramp-function generator
84	get	PID Feedback	r2266: technology controller actual value after filter
85	get	PID Output	r2294: Technology controller output signal

The instances are assigned using the slot sequence in p0978.

Siemens Motor Data Object, Instance Number: 32D hex

Supported services

Class
- Get Attribute single

Instance
- Get Attribute single
- Set Attribute single

Object "32D hex" is only available on "SERVO" and "VECTOR" drive objects:

- SERVO DO = 11
- VECTOR DO = 12

Table 6- 48 Class Attribute

No.	Service	Type	Name
1	get	UINT16	Revision
2	get	UINT16	Max Instance
3	get	UINT16	Num of Instances

Table 6- 49 Instance Attribute

No.	Service	Type	Name	Value/explanation
2	get, set	UINT16	Commissioning state	p0010: commissioning parameter filter
3	get	INT16	Motor Type	p0300: motor type
6	get, set	REAL	Rated Current	p0305: rated motor current
7	get, set	REAL	Rated Voltage	p0304: rated motor voltage
8	get, set	REAL	Rated Power	p0307: rated motor power
9	get, set	REAL	Rated Frequency	p0310: rated motor frequency
10	get, set	REAL	Rated Tempera-ture	p0605: Threshold and temperature value for moni-toring the motor temperature
11	get, set	REAL	Max Speed	p0322: maximum motor speed
12	get, set	UINT16	Pole pair number	p0314: motor pole pair number
13	get, set	REAL	Torque Constant	p0316: motor torque constant
14	get, set	REAL	Inertia	p0341: motor moment of inertia
15	get, set	REAL	Base Speed	p0311: rated motor speed
19	get, set	REAL	Cos Phi	p0308: rated motor power factor

The instances are assigned using the slot sequence in p0978.

TCP/IP Interface Object, Instance Number: F5 hex

Supported services

Class
- Get Attribute all
- Get Attribute single

Instance
- Get Attribute all
- Get Attribute single
- Set Attribute single

Table 6- 50 Class Attribute

No.	Service	Type	Name
1	get	UINT16	Revision
2	get	UINT16	Max Instance
3	get	UINT16	Num of Instances

Table 6- 51 Instance Attribute

No.	Service	Type	Name	Value/explanation
1	get	UNIT32	Status	Fixed value: 1 hex 1: Configuration acknowledged, by DHCP or saved values
2	get	UNIT32	Configuration Capability	Fixed value: 94 hex 4 hex: DHCP supported, 10 hex: Configuration can be adjusted, 80 hex: ACD-capable
3	get, set	UNIT32	Configuration Control	1 hex: Saved values 3 hex: DHCP
4	get, set	UNIT16	Physical link	Path Size (in WORDs) Fixed value: 2 hex
		UNIT8		Path 20 hex, F6 hex, 24 hex, 05 hex, where 5 hex is the number of instances of F6 hex (four physical ports plus one internal port).
5	get, set	STRING	Interface Configuration	r61000: name of station
		UNIT32		r61001: IP address
6	get, set	UNIT16	Host Name	Host Name Length
		STRING		-
10	get, set	UNIT8	Select ACD	local OM flash: 0: Disabled, 1: Enabled
11	get, set	UNIT8	Last Conflict Detected	local OM flash ACD Activity
		UNIT8		local OM flash Remote MAC
		UNIT8		local OM flash ARP PDU

Link Object, Instance Number: F6 hex

Supported services

Class
- Get Attribute all
- Get Attribute single

Instance
- Get Attribute all
- Get Attribute single
- Set Attribute single

Table 6- 52 Class Attribute

No.	Service	Type	Name
1	get	UINT16	Revision
2	get	UINT16	Max Instance
3	get	UINT16	Num of Instances

Table 6- 53 Instance Attribute

No.	Service	Type	Name	Value/explanation
1	get	UINT32	Interface Speed	0: link down, 10: 10 Mbps, 100: 100 Mbps
2	get	-	Interface Flags	Bit 1: Link-Status Bit 2: Duplex Mode (0: half duplex, 1 duplex) bit 3 ... 5: Automatic state identification Bit 6: Reset required Bit 7: Local hardware fault (0 = ok)
3	get	ARRAY	Physical Address	r8935: Ethernet MAC address
4	get, get_and _clear	Struct of	Interface Counters	Optional, required if the "Media Counters Attribute" is implemented.
		UINT32	In Octets	Received octets
		UINT32	In Ucast Packets	Received Unicast packets
		UINT32	In NUcast Packets	Received non-Unicast packets
		UINT32	In Discards	Incoming packets, not processed
		UINT32	In Errors	Incoming packets with errors
		UINT32	In Unknown Protos	Incoming packets with unknown protocol
		UINT32	Out Octets	Sent octets
		UINT32	Out Ucast Packets	Sent Unicast packets
		UINT32	Out NUcast packets	Sent non-Unicast packets
		UINT32	Out Discards	Outgoing packets, not processed
		UINT32	Out Errors	Outgoing packets, with errors

No.	Service	Type	Name	Value/explanation
5	get, get_and _clear	Struct of	Media Counters	Media-specific counters
		UINT32	Alignment Errors	Structure received, which does not match the number of octets
		UINT32	FCS Errors	Structure received, which does not pass the FCS check
		UINT32	Single Collisions	Structure successfully transmitted, precisely one collision
		UINT32	Multiple Collisions	Structure successfully transmitted, several collisions
		UINT32	SQE Test Errors	Number of SQE errors
		UINT32	Deferred Transmissions	First transmission attempt delayed
		UINT32	Late Collisions	Number of collisions that occurred delayed by 512 bit timers to the request
		UINT32	Excessive Collisions	Transmission unsuccessful as a result of intensive collisions
		UINT32	MAC Transmit Errors	Transmission unsuccessful as a result of an internal MAC sublayer transmission error.
		UINT32	Carrier Sense Errors	Number of errors when attempting to send a request frame, where the transmission condition was lost or was not assigned
		UINT32	Frame Too Long	Structure too large
		UINT32	MAC Receive Errors	Transmission unsuccessful as a result of an internal MAC sublayer receive error.
6	get, set	Struct of	Interface Control	-
		UINT16	Control Bits	-
		UINT16	Forced Interface Speed	-
10	get	String	Interface_Label	Interface-Label
11	get	-	Interface capability	Bit 0: Manual setting Bit 1: Auto negotiate Bit 2: Auto MDIX Bit 3: Manual speed/duplex Bits 4 – 31: reserved Rest: Speed/duplex options

Parameter Object, Instance Number: 401 hex

Supported services

Class
- Get Attribute all

Instance
- Get Attribute all
- Set Attribute single

Table 6- 54 Class Attribute

No.	Service	Type	Name
1	get	UINT16	Revision
2	get	UINT16	Max Instance
3	get	UINT16	Num of Instances

Parameter access to drive object 0 (DO 0) is realized via this class.

Example: Read parameter 2050[10] (connector output to interconnect the PZD received from the fieldbus controller)

Get Attribute single function with the following values:

- Class = 401 hex
- Instance = 2050 = 802 hex ≙ parameter number
- Attribute = 10 = A hex ≙ Index 10

Example: Parameter 1520[0] writing (upper torque limit)

Set Attribute single function with the following values:

- Class = 401 hex
- Instance = 1520 = 5F0 hex ≙ parameter number
- Attribute = 0 = 0 hex ≙ index 0
- Data = 500.0 (value)

Parameter Object, Instance Number: 401 hex ... 43E hex

Supported services

Class
- Get Attribute all
- Get Attribute single

Instance
- Get Attribute all
- Set Attribute single

Table 6- 55 Class Attribute

No.	Service	Type	Name
1	get	UINT16	-
2	get	UINT16	Max slot num
3	get	UINT16	Max slot ID

Parameter access to drive object 0 (DO 0) is realized via this class.

The class structure is analog to 401 hex. Drive object (DO) is selected via the class number.

Example:

0x401 -> DO 1

0x402 -> DO 2

...

0x43E -> DO 62

6.11.5 Integrate the drive device into the Ethernet network via DHCP

Integrating the drive into the EtherNet/IP network via the onboard PROFINET interface X150.

Proceed as follows to integrate the drive into EtherNet/IP:

1. Set p8924 (PN DHCP mode) = 2 or 3

Parameterization	Meaning
p8924 = 2	The DHCP server assigns the IP address based on the MAC address.
p8924 = 3	The DHCP server assigns the IP address based on the station name.

2. Save the settings with p8925 = 2.

   The next time that it is run-up, the drive retrieves the IP address made available by a DHCP server. After the drive has run-up, you can address the drive as Ethernet participant.

Note

Immediate switchover without restart

The switchover to DHCP is performed immediately and without a restart if the change is carried out with the EIP command "Set Attribute Single" (class F5 hex, attribute 3), e.g. using:

- An EIP control
- An EIP commissioning tool

Displays:

- r8930: Station name of the onboard PROFINET interface X150
- r8934: DHCP mode of the onboard PROFINET interface X150
- r8935: MAC address of the onboard PROFINET interface X150

Integrating the drive into the EtherNet/IP network via interface X1400 on the CBE20

Proceed as follows to integrate the drive into EtherNet/IP:

1. Set p8944 (CBE2x DHCP mode) = 2 or 3.

Parameterization	Meaning
p8944 = 2	The DHCP server assigns the IP address based on the MAC address.
p8944 = 3	The DHCP server assigns the IP address based on the station name.

2. Save the settings with p8945 = 2.

   The next time that it is run-up, the drive retrieves the IP address made available by a DHCP server. After the drive has run-up, you can address the drive as Ethernet participant.

Note

Immediate switchover without restart

The switchover to DHCP is performed immediately and without a restart if the change is carried out with the EIP command "Set Attribute Single" (class F5 hex, attribute 3), e.g. using:

- An EIP control
- An EIP commissioning tool

Displays:

- r8950: Station name of interface X1400 at the CBE20
- r8954: DHCP mode of interface X1400 at the CBE20
- r8955: MAC address of interface X1400 at the CBE20

6.11.6 Parameters, faults and alarms

Parameters

- p0978 List of drive objects
- p0922 IF1 PROFIdrive PZD telegram selection
- p0999[0...99] List of modified parameters 10
- p8835 CBE20 firmware selection
- p8842 COMM BOARD activate send configuration
- p8920[0...239] PN name of station
- p8921[0...3] PN IP address
- p8922[0...3] PN default gateway
- p8923[0...3] PN Subnet Mask

- p8924 PN DHCP mode
- p8925 Activate PN interfaces configuration
- r8930[0...239] PN Name of Station actual
- r8931[0...3] PN IP Address actual
- r8932[0...3] PN Default Gateway actual
- r8933[0...3] PN subnet mask actual
- r8934 PN DHCP mode actual
- r8935[0...5] PN MAC address
- p8940[0...239] CBE2x Name of Station
- p8941[0...3] CBE2x IP address
- p8942[0...3] CBE2x Default Gateway
- p8943[0...3] CBE2x Subnet Mask
- p8944 CBE2x DHCP mode
- p8945 CBE2x interfaces configuration
- r8950[0...239] CBE2x Name of Station actual
- r8951[0...3] CBE2x IP address actual
- r8952[0...3] CBE2x Default Gateway actual
- r8953[0...3] CBE2x Subnet Mask actual
- r8954 CBE2x DHCP Mode actual
- r8955[0...5] CBE2x MAC address

Faults and alarms

- F01910 (N, A) Fieldbus: Setpoint timeout
- F08501 (N, A) PN/COMM BOARD: Setpoint timeout
- A01980 (F) PN: Cyclic connection interrupted
- A08526 (F) PN/COMM BOARD: No cyclic connection
- A01906 (F) EtherNet/IP Configuration error
- A50011 (F) EtherNetIP/COMM BOARD: Configuration error

6.12 Communication via MODBUS TCP

6.12.1 Overview

The Modbus protocol is a communication protocol based on a controller/device architecture.

Modbus offers three transmission modes:

- **Modbus ASCII -** via a serial interface
  data in the ASCII code. The data throughput is lower compared to RTU.
- **Modbus RTU -** via a serial interface
  data in the binary format. The data throughput is greater than in ASCII code.
- **Modbus TCP -** via Ethernet
  data as TCP/IP packages. TCP port 502 is reserved for Modbus TCP.

With the CU320-2 Control Unit, only transfer type "**Modbus TCP**" is available.

Modbus functionality

Process data and parameters are accessed via the Modbus register.

- Process data: 40100 - 40119
- Drive data: 40300 - 40522
- All parameters via DS47: 40601 - 40722

Modbus TCP always provides a basic Ethernet functionality, which corresponds to the functionality of Ethernet interface X127:

- Commissioning access for STARTER with S7 protocol
- DCP to set the IP address etc.
- SNMP for identification

General information about communication

Communication with Modbus TCP is established via the Ethernet/PROFINET interfaces:

- **X150:**

  For Modbus TCP with a CU320-2 PN.
- **X1400:**

  For Modbus TCP with a CU320-2 PN or a CU320-2 DP via a CBE20.

Precisely one Modbus connection can be established. A simultaneous connection via the interfaces X150 and X1400 is not possible and is acknowledged with alarm A08555(1).

However, you can use one interface for Modbus TCP, and the other as PROFINET interface.

Drive object that can be addressed via Modbus

With Modbus TCP, you always address drive object DO1 from the list of drive objects (p0978[0]). A vector drive object must be in this parameter.

- However, Modbus TCP is only activated if, under p0978[0], there is a drive object that is supported by Modbus TCP.
- If p0978[0] does not contain a valid drive object, then establishing communication is acknowledged with alarm A08555(2).

Diagnostics LEDs in Modbus TCP

Diagnostics states are shown as follows using LEDs with Modbus TCP:

- X150: "PN" LED
- X1400 (CBE20): "OPT" LED

The following states can be displayed using these LEDs:

Color	State	Significance
Green	Continuous light	Connections and setpoints are OK.
Green	Flashing light	Connection is OK, but no setpoints (dependent on timeout).
Red	Flashing light 2 Hz	No connection or setpoint timeout.

6.12.2 Configuring Modbus TCP via interface X150

Activate Modbus TCP via X150 (CU320-2 PN)

1. For drive object DO1, set p2030 = 13 (Modbus TCP).
2. Using p8921, set the IP address for the onboard PROFINET interface on the Control Unit.
3. Set the standard gateway using p8922.
4. Set the subnet mask using p8923.
5. Set the DHCP mode using p8924.
6. Select "Activate and save configuration" as interface configuration using p8925 = 2.
7. In the STARTER commissioning tool, check the list of drive object p0978.

   When required, change the sequence of the drive objects using the telegram configuration ("Drive device" > "Communication" > "Telegram configuration").
8. Save the settings in the STARTER commissioning tool and carry out a POWER ON.

Modbus settings with interface X150

Using the following parameters, set the communication for Modbus TCP with a X150 interface:

Parameters	Explanation
p2040	Setting the monitoring time to monitor the received process data via fieldbus interface. If process data is not transferred within one cycle of the fieldbus monitoring time, then the drive shuts down with fault F01910.
r2050[0...19]	Connector output to interconnect the PZD received from the fieldbus controller via IF1.
p2051[0...24]	Selects the PZD (actual values) to be sent to the fieldbus controller in the word format via IF1.
r2053[0...24]	Displays the PZD (actual values) sent to the fieldbus controller in the word format via IF1.
r2054	Status display for the internal communication interface.
p8839[0...1]	Assigning the PN onboard interface (X150) for acyclic communication via PZD interface 1 (IF1) and interface 2 (IF2).
r8850[0...19]	Connector output to interconnect the PZD (setpoints) received in the word format via IF2.
p8851[0...24]	Selects the PZD (actual values) to be sent in the word format via IF2.
r8853[0...24]	Displays the PZD (actual values) sent in the word format via IF2.
r8854	Status display for COMM BOARD.

6.12.3 Configuring Modbus TCP via interface X1400

Activating Modbus TCP via X1400 (CBE20)

1. For drive object DO1, set p8835 = 5 (Modbus TCP).
2. Set the IP address for the CBE20 using p8941.
3. Set the standard gateway for the CBE20 using p8942.
4. Set the subnet mask for the CBE20 using p8943.
5. Set the DHCP mode for the CBE20 using p8944.
6. Select the setting "Activate and save configuration" as interface configuration using p8945 = 2.
7. In the STARTER commissioning tool, check the list of drive object p0978.

   When required, change the sequence of the drive objects using the telegram configuration ("Drive device" > "Communication" > "Telegram configuration").
8. Save the settings in the STARTER commissioning tool and carry out a POWER ON.

Modbus settings with interface X1400

Using the following parameters, set the communication for Modbus TCP with a X1400 interface:

Parameters	Explanation
r2050[0...19]	Connector output to interconnect the PZD received from the fieldbus controller via IF1.
p2051[0...24]	Selects the PZD (actual values) to be sent to the fieldbus controller in the word format via IF1.
r2053[0...24]	Displays the PZD (actual values) sent to the fieldbus controller in the word format via IF1.
r2054	Status display for the internal communication interface.
p8840	Setting the monitoring time to monitor the received process data via the COMM BOARD. If, within this time, the Control Unit does not receive any process data from the COMM BOARD, then the drive shuts down with fault F08501.
p8839[0...1]	Assigning the CBE20 interface (x1400) for cyclic communication via PZD interface 1 (IF1) and interface 2 (IF2).
r8850[0...19]	Connector output to interconnect the PZD (setpoints) received in the word format via IF2.
p8851[0...24]	Selects the PZD (actual values) to be sent in the word format via IF2.
r8853[0...24]	Displays the PZD (actual values) sent in the word format via IF2.
r8854	Status display for COMM BOARD.

6.12.4 Mapping tables

Modbus register and Control Unit parameters

The Modbus protocol contains register or bit numbers for addressing the memory. You must assign the appropriate control words, status words, and parameters to these registers in the device.

The valid holding register address range extends from 40001 up to 40722. When trying to access other holding registers, the "Exception code" error is output

The process data are transferred into the register range from 40100 up to 40119.

Note

"R"; "W"; "R/W" in the Access column stands for read (with FC03); write (with FC06); read/write.

Table 6- 56 Assigning the Modbus register to the parameters - process data

Register	Description	Access	Unit	Scaling	ON/OFF text or Value range	Data / parameter
Control data						
40100	Control word (see List Manual, function diagram 2442)	R/W	-	1	-	Process data 1
40101	Main setpoint	R/W	-	1	-	Process data 2
40102	STW 3	R/W	-	1	-	Process data 3
40103	STW 4	R/W	-	1	-	Process data 4
40104	PZD 5	R/W	-	1	-	Process data 5
40105	PZD 6	R/W	-	1	-	Process data 6
40106	PZD 7	R/W	-	1	-	Process data 7
40107	PZD 8	R/W	-	1	-	Process data 8
40108	PZD 9	R/W	-	1	-	Process data 9
40109	PZD 10	R/W	-	1	-	Process data 10
Status data						
40110	Status word (see List Manual, function diagram 2452)	R	-	1	-	Process data 1
40111	Main actual value	R	-	1	-	Process data 2
40112	ZSW 3	R	-	1	-	Process data 3
40113	ZSW 4	R	-	1	-	Process data 4
40114	PZD 5	R	-	1	-	Process data 5
40115	PZD 6	R	-	1	-	Process data 6
40116	PZD 7	R	-	1	-	Process data 7
40117	PZD 8	R	-	1	-	Process data 8
40118	PZD 9	R	-	1	-	Process data 9
40119	PZD 10	R	-	1	-	Process data 10

Table 6- 57 Assigning the Modbus register to the parameters - parameter data

Register	Description	Access	Unit	Scaling	ON/OFF text or Value range	Data / parameter
Drive identification						
40300	Actual power unit code number	R	-	1	0 ... 65535	r0200
40301	Control Unit firmware	R	-	1	0 ... 65535	r0018 / 10000
Drive data						
40320	Rated power of the power unit	R	kW	100	0 ... 655.35	r0206
40321	Current limit	R/W	%	10	0.0 ... 6553.5	p0640
40322	Ramp-up time	R/W	s	100	10.00 ... 655.35	p1120
40323	Ramp-down time	R/W	s	100	10.00 ... 655.35	p1121
40324	Reference speed	R/W	RPM	1	6 ... 65535	p2000
Drive diagnostics						
40340	Speed setpoint	R	RPM	1	-32768 ... 32767	r0020
40341	Actual speed value	R	RPM	1	-32768 ... 32767	r0021
40342	Output frequency	R	Hz	100	- 327.68 ... 327.67	r0024
40343	Output voltage	R	V	1	0 ... 65535	r0025
40344	DC-link voltage	R	V	1	0 ... 65535	r0026

Register	Description	Access	Unit	Scaling	ON/OFF text or Value range	Data / parameter
40345	Actual current value	R	A	100	0 ... 655.35	r0027
40347	Actual active power	R	kW	100	0 ... 655.35	r0032
40349	Control priority	R	-	1	HAND AUTO	r0807
Fault diagnostics						
40400	Failure number, index 0	R	-	1	0 ... 65535	r0947[0]
40401	Failure number, index 1	R	-	1	0 ... 65535	r0947[1]
40402	Failure number, index 2	R	-	1	0 ... 65535	r0947[2]
40403	Fault number, index 3	R	-	1	0 ... 65535	r0947[3]
40404	Fault number, index 4	R	-	1	0 ... 65535	r0947[4]
40405	Fault number, index 5	R	-	1	0 ... 65535	r0947[5]
40406	Fault number, index 6	R	-	1	0 ... 65535	r0947[6]
40407	Fault number, index 7	R	-	1	0 ... 65535	r0947[7]
40408	Alarm number	R	-	1	0 ... 65535	r2110[0]
40409	Actual alarm code	R	-	1	0 ... 65535	r2132
40499	PRM ERROR code	R	-	1	0 ... 255	-
Technology controller[3)]						
40500	Technology controller enable	R/W	-	1	0 ... 1	p2200, r2349.0
40501	Technology controller MOP	R/W	%	100	-200.0 ... 200.0	p2240
Adapt technology controller [1)]						
40510	Time constant for actual-value filters of the technology controller	R/W	-	100	0.00 ... 60.0	p2265
40511	Scaling factor for actual value of the technology controller	R/W	%	100	0.00 ... 500.00	p2269
40512	Proportional amplification of the technology controller	R/W	-	1000	0.000 ... 65.535	p2280
40513	Integral time of the technology controller	R/W	s	1	0 ... 60	p2285
40514	Time constant D-component of the technology controller	R/W	-	1	0 ... 60	p2274
40515	Max. limit of technology controller	R/W	%	100	-200.0 ... 200.0	p2291
40516	Min. limit technology controller	R/W	%	100	-200.0 ... 200.0	p2292
PID diagnostics						
40520	Effective setpoint acc. to internal technology controller MOP ramp-function generator	R	%	100	-100.0 ... 100.0	r2250
40521	Actual value of technology controller after filter	R	%	100	-100.0 ... 100.0	r2266
40522	Output signal technology controller	R	%	100	-100.0 ... 100.0	r2294

1) The technology controller parameters can only be accessed if, in the STARTER project, also the "Technology controller" function module is activated.

Table 6- 58 Assignment of the Modbus register for general parameter access using DS47

Register	Description	Access	Unit	Scaling	ON/OFF text or Value range	Data / parameter
40601	DS47 Control	R/W	-	-	-	-
40602	DS47 header	R/W	-	-	-	-
40603	DS47 data 1	R/W	-	-	-	-
...	...					
40722	DS47 data 120	R/W	-	-	-	-

Note

Limited value range

Modbus TCP registers have a maximum 16 bit width. The values of display parameters (r parameters) cannot always be represented with 16 bits. In these particular cases, the maximum value that can be represented is displayed.

- Unsigned: 65535
- Signed min: -32768
- Signed max: 32767

6.12.5 Write and read access using function codes

Function codes used

For data exchange between the controller and device, predefined function codes are used for communication via Modbus.

The Control Unit uses the following Modbus function codes:

- FC 03: Holding register to read data from the inverter
- FC 06: Write single register to write to individual register
- FC 16: Write to multiple registers to write to several registers

Structure of a Modbus TCP message

Table 6- 59 Individual components, including Modbus Application Header (MBAP) and function code

Application Data Unit (ADU)					
Modbus Application Header				Protocol Data Unit (PDU	
Transaction ID	Protocol ID	Length	Unit ID	FCode	Data
2 bytes	2 bytes	2 bytes	1 byte	1 byte	0 ... 252 bytes

Structure of a read request via Modbus function code 03 (FC 03)

Any valid register address is permitted as the start address.

Via FC 03, the control can address more than one register with one request. The number of addressed registers is contained in bytes 10 and 11 of the read request.

Table 6- 60 Structure of a read request for device number 17, example

Value	Byte	Description
MBAP header		
03 h	7	
00 h	8	Register start address "High" (register 40110)
6D h	9	Register start address "Low"
00 h	10	Number of registers "High" (2 registers: 40110; 40111)
02 h	11	number of registers "Low"

The response returns the corresponding data set:

Table 6- 61 Device response to the read request, example

Value	Byte	Description
MBAP header		
03 h	7	Function code
04 h	8	Number of bytes (4 bytes are returned)
11 h	9	Data, first register "High"
22 h	10	Data, first register "Low"
33 h	11	Data, second register "High"
44 h	12	Data, second register "Low"

Table 6- 62 Invalid read request

Read request	Inverter response
Invalid register address	Exception code 02 (invalid data address)
Read a write-only register	Telegram in which all values are set to 0.
Read a reserved register	
Controller addresses more than 125 registers	Exception code 03 (invalid data value)
The start address and the number of registers of an address are located outside of a defined register block	Exception code 02 (invalid data address)

Structure of a write request via Modbus function code 06 (FC 06)

Start address is the holding register address.

Via FC 06, with one request, only precisely one register can be addressed. The value, which is written to the addressed register, is contained in bytes 10 and 11 of the write request.

Table 6- 63 Structure of a write request for device number 17, example

Value	Byte	Description
MBAP header		
06 h	7	Function code
00 h	8	Register start address "High" (write register 40100)
63 h	9	Register start address "Low"
55 h	10	Register data "High"
66 h	11	Register data "Low"

The response returns register address (bytes 8 and 9) and the value (bytes 10 and 11), which the higher-level control had written to the register.

Table 6- 64 Device response to the write request, example

Value	Byte	Description
MBAP header		
06 h	7	Function code
00 h	8	Register start address "High"
63 h	9	Register start address "Low"
55 h	10	Register data "High"
66 h	11	Register data "Low"

Table 6- 65 Invalid write request

Write request	Inverter response
Incorrect address (a holding register address does not exist)	Exception Code 02 - invalid data address
Write to a "read-only" register	Exception Code 04 - device failure
Write to a reserved register	

For Exception Code 4, via the holding register 40499, you can read out the internal drive error code, which has occurred for the last parameter access via the holding register.

6.12.6 Communication via data set 47

Via FC 16, with one request, up to 122 registers can be written to directly one after the other, while for Write Single Register (FC 06) you must individually write the header data for each register.

Header

In addition to the transfer type, the start address and the number of the following registers in the header.

User data

You control the access in the user data via register 40601.

In register 40602, you define the access as well as the length of the request data.

Register 40603 contains the request reference - it is defined by the user - and the access type -reading or writing.

From register 40603 and higher, the request aligns communication via data set 47 according to PROFIdrive.

Register 40604 contains the number of the drive object and the number of parameters that are read out or written to.

Register 40605 contains the attribute that you use to control whether you read out the parameter value or the parameter attribute. In the number of elements you specify how many indices are read.

6.12.6.1 Communication details

General parameter access is realized using the Modbus register 40601 ... 40722.

Communication via DS47 is controlled via register 40601. Register 40602 contains the function code (always = 47 = 2F hex) and the number of the following user data. User data are contained in registers 40603 ... 40722.

Communication overview

Value in the register				Explanation
40601	**40602**		**40603 ... 40722**	
0	47	...	...	Write values for acyclic access
1	47	Request length [bytes]	Request data	Activate acyclic access
2	47	Response length [bytes]	Response data	Response for a successful request
2	47	0	Error code	Response for an erroneous request

Error codes

1 hex: Invalid Length (invalid length)
2 hex: Invalid State (in the actual inverter state, this action is not permitted)
3 hex: Invalid function code (FC ≠ 2F hex)
4 hex: Response not ready (the response has still not been issued)
5 hex: Internal Error (general system error)

Incorrect access operations to parameters via data set 47 are logged in registers 40603 ... 40722. The error codes are described in the PROFIdrive profile.

6.12.6.2 Examples: Read parameters

Table 6- 66 Write parameter request: Reading parameter value of r0002 from device number 17

Value	Byte	Description
MBAP header		
10 h	7	Function code (write multiple)
0258 h	8,9	Register start address
0007 h	10,11	Number of registers to be read (40601 … 40607)
0E h	12	Number of data bytes (7 registers, each 2 bytes = 14 bytes)
0001 h	13,14	40601: DS47 Control = 1 (activate request)
2F0A h	15,16	40602: Function 2F h (47), request length 10 bytes (0A h)
8001 h	17,18	40603: Request reference = 80 h, request identifier = 1 h
0101 h	19,20	40604: DO-Id = 1, number of parameters = 1
1001 h	21,22	40605: Attribute, number of elements = 1
0002 h	23,24	40606: Parameter number = 2
0000 h	25,26	40607: Subindex = 0

Table 6- 67 Start parameter request: Reading parameter value of r0002 from device number 17

Value	Byte	Description
MBAP header		
03 h	7	Function code (read)
0258 h	8,9	Register start address
0007 h	10,11	Number of registers to be read (40601 … 40607)
0010 h	12,13	Number of registers

Table 6- 68 Response for successful read operation

Value	Byte	Description
MBAP header		
03 h	7	Function code (read)
20 h	8	Number of following data bytes (20 h: 32 bytes ≙ 16 registers)
0002 h	9,10	40601: DS47 Control = 2 (the request was executed)
2F08 h	11,12	40602: Function code 2F h (47), response lengths 8 bytes
8001 h	13,14	40603: Request reference mirrored = 80 h, response identifier = 1 (request parameter)
0101 h	15,16	40604: DO-ID = 1, number of parameters = 1
0301 h	17,18	40605: Format, number of elements = 1
001F h	19,20	40606: Parameter value = 1F h (31)

Table 6- 69 Response for unsuccessful read operation - read request still not completed

Value	Byte	Description
MBAP header		
03 h	7	Function code (read)
20 h	8	Number of following data bytes (20 h: 32 bytes ≙ 16 registers)
0001 h	9,10	40601: Check value 1 = request is processed
2F00 h	11,12	40602: Function code 2F h (47), response length 0 (error)
0004 h	13,14	40603: Error code: 0004 Response Not Ready (response has still not been issued)

6.12.6.3 Examples: Write parameter

Table 6- 70 Write parameter request: Writing the parameter value of p1121 from device number 17

Value	Byte	Description
MBAP header		
10 h	7	Function code (write multiple)
0258 h	8,9	Register start address
000A h	10,11	Number of registers to be written to (40601 … 40610)
14 h	12	Number of data bytes (10 registers, each 2 bytes = 20 bytes)
0001 h	13,14	40601: C1 (activate request)
2F10 h	15,16	40602: Function 2F h (47), request length 16 bytes (10 h)
8002 h	17,18	40603: Request reference = 80 h, request identifier = 2 h (write)
0101 h	19,20	40604: DO-Id = 1, number of parameters = 1
1001 h	21,22	40605: Attribute, number of elements = 1
0461 h	23,24	40606: Parameter number = 1121
0000 h	25,26	40607: Subindex = 0
0801 h	27,28	40608: Format + number of values
4142 h	29,30	40609: Parameter value 12,15
6666 h	31,32	40610: Parameter value

Table 6- 71 Start parameter request: Writing the parameter value of p1121 from device number 17

Value	Byte	Description
MBAP header		
03 h	7	Function code (read)
0258 h	8,9	Register start address
0007 h	10,11	Number of registers to be written to (40601 … 40610)
0010 h	12,13	Number of registers

Table 6- 72 Response for successful write operation

Value	Byte	Description
MBAP header		
03 h	7	Function code (read)
20 h	8	Number of following data bytes (20 h: 32 bytes ≙ 16 registers)
0002 h	9,10	40601: DS47 Control = 2 (request was executed)
2F04 h	11,12	40602: Function code 2F h (47), response length 4 bytes
8002 h	13,14	40603: Request reference mirrored = 80 h, response identifier = 2 (change parameter)
0101 h	15,16	40604: DO-ID = 1, number of parameters = 1

Table 6- 73 Response for unsuccessful write operation - write request still not completed

Value	Byte	Description
MBAP header		
03 h	7	Function code (read)
20 h	8	Number of following data bytes (20 h: 32 bytes ≙ 16 registers)
0001 h	9,10	40601: DS47 Control = 1 (request is processed)
2F00 h	11,12	40602: Function code 2F h (47), response length 0 (error)
0004 h	13,14	40603: Error code: 0004 Response Not Ready (response has still not been issued)

6.12.7 Communication procedure

Logical error

If the device detects a logical error within a request, it responds to the controller with an "exception response". In the response, the device sets the highest bit in the function code to 1. If the device receives, for example, an unsupported function code from the controller, the device responds with an "exception response" with code 01 (illegal function code).

Table 6- 74 Overview of exception codes

Exception code	Modbus name	Remark
01	Illegal function code	An unknown (unsupported) function code was sent to the device.
02	Illegal Data Address	An invalid address was requested.
03	Illegal data value	An invalid data value was detected.
04	Server failure	The device terminated while processing.

Process data monitoring time (setpoint timeout)

The "Setpoint timeout" only applies for access to process data (40100 ... 40109, 40110 ... 40119). The "Setpoint timeout" is not generated for parameter data (40300 ... 40522).

Fieldbus interface:

In parameter p2040 you define the time for cyclic data exchange for process data.

Setting range: 0 ... 2000 s.

The time depends on the amount of data to be transferred and the control.

"Setpoint timeout" (F01910) is issued by the Modbus if p2040 is set to a value > 0 ms and no process data is requested within this time period.

COMM BOARD (CBE20):

In parameter p8840 you define the time for cyclic process data exchange.

Setting range: 0 ... 2000 s.

The time depends on the amount of data to be transferred and the control.

"Setpoint timeout" (F08501) is issued by the Modbus if p8840 is set to a value > 0 ms and no process data is requested within this time period.

6.12.8 Parameters, faults and alarms

Parameters

- p0978 List of drive objects
- p2030 Fieldbus interface protocol selection
- p2040 Fieldbus interface monitoring time:
- r2050[0...19] CO: IF1 PROFIdrive PZD receive word
- p2051[0...24] CI: IF1 PROFIdrive PZD send word
- r2053[0...24] IF1 PROFIdrive diagnostics PZD send word
- r2054 PROFIBUS status
- p8835 CBE20 firmware selection
- p8839[0...1] PZD interface hardware assignment
- p8840 COMM BOARD monitoring time
- r8850[0...19] CO: IF2 PZD receive word
- p8851[0...24] CI: IF2 PZD send word
- r8853[0...24] IF2 diagnostics PZD send
- r8854 COMM BOARD state
- p8920[0...239]PN Name of Station
- p8921[0...3] PN IP address
- p8922[0...3] PN default gateway
- p8923[0...3 PN Subnet Mask
- p8924 PN DHCP mode
- p8925 PN interfaces configuration
- p8940[0...239]CBE2x Name of Station
- p8941[0...3] CBE2x IP address
- p8942[0...3] CBE2x Default Gateway
- p8943[0...3] CBE2x Subnet Mask
- p8944 CBE2x DHCP mode
- p8945 CBE2x interfaces configuration

Faults and alarms

- F01910 Fieldbus: Setpoint timeout
- A01925 (F) Modbus TCP connection interrupted
- F08501 (N, A) PN/COMM BOARD: Setpoint timeout
- A08526 (F) PN/COMM BOARD: No cyclic connection
- A08555 Modbus TCP commissioning fault

6.13 Communication services and used port numbers

The drive device supports the protocols listed in the following table. The address parameters, the relevant communication layer as well as the communication role and the communication direction are specified for each protocol.

This information allows you to match the security measures for the protection of the automation system to the used protocols (e.g. firewall). As the security measures are limited to Ethernet and PROFINET networks, no PROFIBUS protocols are listed in the table.

The following table shows the various layers and protocols that are used.

Layers and protocols

Report	Port number	(2) Link layer (4) Transport layer	Function	Description
PROFINET protocols				
DCP Discovery and configuration protocol	Not relevant	(2) Ethernet II and IEEE 802.1Q and Ethertype 0x8892 (PROFINET)	Accessible nodes, PROFINET Discovery and configuration	DCP is used by PROFINET to determine PROFINET devices and to make basic settings. DCP uses the special multicast MAC address: xx-xx-xx-01-0E-CF, xx-xx-xx = Organizationally Unique Identifier
LLDP Link Layer Discovery protocol	Not relevant	(2) Ethernet II and IEEE 802.1Q and Ethertype 0x88CC (PROFINET)	PROFINET Link Layer Discovery protocol	LLDP is used by PROFINET to determine and manage neighborhood relationships between PROFINET devices. LLDP uses the special multicast MAC address: 01-80-C2-00-00-0E
MRP Media Redundancy Protocol	Not relevant	(2) Ethernet II and IEEE 802.1Q and Ethertype 0x88E3 (PROFINET)	PROFINET medium redundancy	MRP enables the control of redundant routes through a ring topology. MRP uses the special multicast MAC address: xx-xx-xx-01-15-4E, xx-xx-xx = Organizationally Unique Identifier
PTCP Precision Transparent Clock Protocol	Not relevant	(2) Ethernet II and IEEE 802.1Q and Ethertype 0x8892 (PROFINET)	PROFINET send clock and time synchronization, based on IEEE 1588	PTC allows a time delay measurements to be made between RJ45 ports – therefore send cycle synchronization and time synchronization. PTCP uses the special multicast MAC address: xx-xx-xx-01-0E-CF, xx-xx-xx = Organizationally Unique Identifier
PROFINET IO data	Not relevant	(2) Ethernet II and IEEE 802.1Q and Ethertype 0x8892 (PROFINET)	PROFINET Cyclic IO data transfer	The PROFINET IO telegrams are used to cyclically transfer I/O data between the PROFINET IO controller and IO devices via Ethernet.

Report	Port number	(2) Link layer (4) Transport layer	Function	Description
PROFINET Context Manager	34964	(4) UDP	PROFINET connection less RPC	The PROFINET context manager provides an endpoint mapper in order to establish an application relationship (PROFINET AR).
Connection-oriented communication protocols				
FTP File Transfer Protocol	21	(4) TCP	Server/incoming	FTP can be used for first commissioning. FTP can be activated/deactivated using parameter p8908.
DHCP Dynamic Host Configuration Protocol	68	(4) UCP	Dynamic Host Configuration Protocol	Is used to query an IP address. Is closed when delivered, and is opened when selecting the DHCP mode.
http Hypertext transfer protocol	80	(4) TCP	Hypertext transfer protocol	http is used for communication with the CU-internal web server. Is open in the delivery state and can be deactivated.
ISO on TCP (according to RFC 1006)	102	(4) TCP	ISO-on-TCP protocol	ISO on TCP (according to RFC 1006) is used for the message-oriented data exchange to a remote CPU, WinAC or devices of other suppliers. Communication with ES, HMI, etc. Is open in the delivery state and is always required.
SNMP Simple network management protocol	161	(4) UDP	Simple network management protocol	SNMP enables the reading out and setting of network management data (SNMP managed Objects) by the SNMP manager. Is open in the delivery state and is always required.
https Secure Hypertext transfer protocol	443	(4) TCP	Secure Hypertext transfer protocol	https is used to communicate with the web server integrated in the CPU via Transport Layer Security (TLS). Is open in the delivery state and can be deactivated.
Internal protocol	5188	4 (TCP)	Server/incoming	Communication with commissioning tools for downloading project data.
Reserved	49152...65535	(4) TCP (4) UDP	-	Dynamic port area that is used for the active connection endpoint if the application does not specify the local port.
EtherNet/IP protocols				
Explicit messaging	44818	(4) TCP (4) UDP	-	Is used for parameter access, etc. Is closed when delivered, and is opened when selecting EtherNet/IP.
Implicit messaging	2222	(4) UDP	-	Is used for exchanging I/O data. Is closed when delivered, and is opened when selecting EtherNet/IP.
Modbus TCP protocols (server)				
Request & response	502	(4) TCP	-	Is used for exchanging data packages. Is closed when delivered, and is opened when selecting Modbus TCP.

6.14 Parallel operation of communication interfaces

General information

The two cyclic interfaces for the setpoints and actual values differ by the parameter ranges used (BICO technology etc.) and the functions that can be used. The interfaces are designated as cyclic interface 1 (IF1) and cyclic interface 2 (IF2).

Cyclic process data (setpoints/actual values) are processed using interfaces IF1 and IF2. The following interfaces are used:

- Onboard interfaces of the Control Unit for PROFIBUS DP or PROFINET.
- An optional interface (COMM board) for PROFINET (CBE20) or CANopen (CBE10) for insertion in the Control Unit.

Parameter p8839 is used to set the parallel use of the Control Unit onboard interfaces and COMM board. The functionality is assigned to interfaces IF1 and IF2 using indices.

For example, the following applications are possible:

- PROFIBUS DP for drive control and PROFINET for the acquisition of actual values/measured values of the drive.
- PROFIBUS DP for control and PROFINET for engineering only
- Mixed mode with two masters (the first for logic and coordination and the second for technology)
- SINAMICS Link via IF2 (CBE20), standard telegrams and PROFIsafe via IF1
- Operation of redundant communication interfaces

Assignment of communication interfaces to cyclic interfaces

With the factory setting p8839 = 99, the communication interfaces are permanently assigned one of the cyclic interfaces (IF1, IF2), depending on the communication system, e.g. PROFIBUS DP, PROFINET or CANopen.

The assignment to the cyclic interfaces can essentially be freely defined by user parameterization for the parallel operation of the communication interfaces.

Table 6- 75 Properties of the cyclic interfaces IF1 and IF2

Feature	IF1	IF2
Setpoint (BICO signal source)	r2050, r2060	r8850, r8860
Actual value (BICO signal sink)	p2051, p2061	p8851, p8861

Table 6- 76 Implicit assignment of hardware to cyclic interfaces for p8839[0] = p8839[1] = 99

Inserted hardware interface	IF1	IF2
No option, only use Control Unit onboard interface (PROFIBUS, PROFINET or USS)	Control Unit onboard	--
CU320-2 DP with CBE20 (optional PROFINET interface)	COMM BOARD	Control Unit onboard PROFIBUS or Control Unit onboard USS
CU320-2 PN with CBE20 (optional PROFINET interface)	Control Unit onboard	COMM BOARD PROFINET
CAN option CBC10	Control Unit onboard	COMM BOARD CAN

Parameter p8839[0,1] is used to set the parallel operation of the hardware interfaces and the assignment to the cyclic interfaces IF1 and IF2 for the Control Unit drive object.

The object sequence for process data exchange via IF2 depends on the object sequence from IF1; see "List of drive objects" (p0978).

The factory setting of p8839[0,1] = 99 enables the implicit assignment (see table above).

An alarm is generated in case of invalid or inconsistent parameterization of the assignment.

Note

Parallel operation of PROFIBUS and PROFINET

Either the isochronous mode or PROFIsafe functionality can be assigned to an interface via p8815 (IF1 or IF2).

Example:

- p8815[0] = 1: IF1 supports the isochronous mode.
- p8815[1] = 2: IF2 supports PROFIsafe.

Additional configuration options are available if additionally the PROFINET module CBE20 is inserted in the CU320-2 DP:

- p8839[0] = 1 and p8839[1] = 2: PROFIBUS isochronous, PROFINET cyclic
- p8839[0] = 2 and p8839[1] = 1: PROFINET isochronous, PROFIBUS cyclic

Parameters for IF2

The following parameters are available in order to optimize the IF2 for a PROFIBUS or PROFINET interface:

- Receive and send process data:
  r8850, p8851, r8853, r8860, p8861, r8863[1)]
- Diagnostic parameters:
  r8874, r8875, r8876[1)]
- Binector-connector converters:
  p8880, p8881, p8882, p8883, p8884, r8889[1)]
- Connector-binector converters:
  r8894, r8895, p8898, p8899[1)]

[1)] Significance of 88xx identical to 20xx

Note

Using the HW Config configuration tool, a PROFIBUS slave / PROFINET device with two interfaces cannot be shown. In parallel operation, this is the reason that a SINAMICS drive appears 2x in the project or in 2 projects, although physically it is just one device.

Parameters

p8839	**PZD interface hardware assignment**
Description:	Assigning the hardware for cyclic communication via PZD interface 1 and interface 2.
Value:	0: Inactive 1: Control Unit onboard 2: COMM BOARD 99: Automatic

For p8839, the following rules apply:

- The setting of p8839 applies for all drive objects of a Control Unit (device parameter).
- For the setting p8839[0] = 99 and p8839[1] = 99 (automatic assignment, factory setting), the hardware used is automatically assigned to interfaces IF1 and IF2. Both indices must be selected so that the automatic assignment is activated. If both indices are not selected, then an alarm is output and the setting p8839[x] = 99 is treated just like 'inactive'.
- An alarm is issued if the same hardware (Control Unit onboard or COMM BOARD) is selected in p8839[0] and p8839[1]. The following then applies: The setting of p8839[0] and the setting of p8839[1] are treated just the same as "inactive".
- If the CAN board (CBC10) is used, the entry of p8839[0] = 2 is not permissible (no assignment of the CAN board to IF1). An alarm is then issued.
- If p8839[x] is set to 2, and the COMM BOARD is missing or defective, then the corresponding interface is not supplied from the Control Unit onboard interface. Message A08550 is output instead.

Parameters

- p0922 IF1 PROFIdrive telegram selection
- p0978[0...24] List of drive objects
- p8815[0...1] IF1/IF2 PZD functionality selection
- p8839[0...1] PZD interface hardware assignment

6.15 Engineering Software Drive Control Chart (DCC)

Graphical configuring and expansion of the device functionality by means of available closed-loop control, arithmetic, and logic function blocks

Drive Control Chart (DCC) expands the facility for the simplest possible configuring of technological functions for both the SIMOTION motion control system and the SINAMICS drive system. This provides the user with a new dimension of system adaptability for specific machine functions.
DCC does not restrict the number of functions that can be used; the only restriction is the performance of the target platform.

The user-friendly DCC Editor enables easy graphical configuration and a clear representation of control loop structures as well as a high degree of reusability of existing diagrams.

The open-loop and closed-loop control functionality is defined by using multi-instance-enabled blocks (Drive Control Blocks (DCBs)) from a pre-defined library (DCB library) that are selected and graphically linked by dragging and dropping.
Test and diagnostic functions allow verification of the program behavior, and troubleshooting in the event of a fault.

The block library encompasses a large selection of closed-loop, arithmetic and logic function blocks, as well as comprehensive open-loop and closed-loop control functions.

For combining, analyzing and acquiring binary signals, all commonly used logic functions are available for selection (AND, XOR, on/off delay, RS flipflop, counter, etc.). Numerous computation functions are available for monitoring and evaluating numerical variables; for example absolute value generation, division, min/max evaluation.
Besides drive control functions, it is also a simple matter to configure axis winding functions, PI controllers, ramp-function generators, and wobble generators.

Almost unlimited programming of control structures is possible in conjunction with the SIMOTION motion control system. These can then be combined with other program sections to form an overall program.

Drive Control Chart for SINAMICS also provides a convenient basis for resolving drive-level open-loop and closed-loop control tasks directly in the drive. This results in further adaptability of SINAMICS for the task set. On-site processing in the drive supports modular machine concepts and results in increased overall machine performance.

Note

Detailed documentation

A detailed description of the DCC Editor and the available Drive Control Blocks is given in the relevant documentation. This documentation is available on the accompanying customer DVD.

Setpoint channel and closed-loop control

7

7.1 Content of this chapter

This chapter provides information on the setpoint channel and closed-loop control functions.

- Setpoint channel
  - Direction reversal
  - Skip speed
  - Minimum speed
  - Speed limitation
  - Ramp-function generator
- U/f control
- Vector speed control with / without encoder

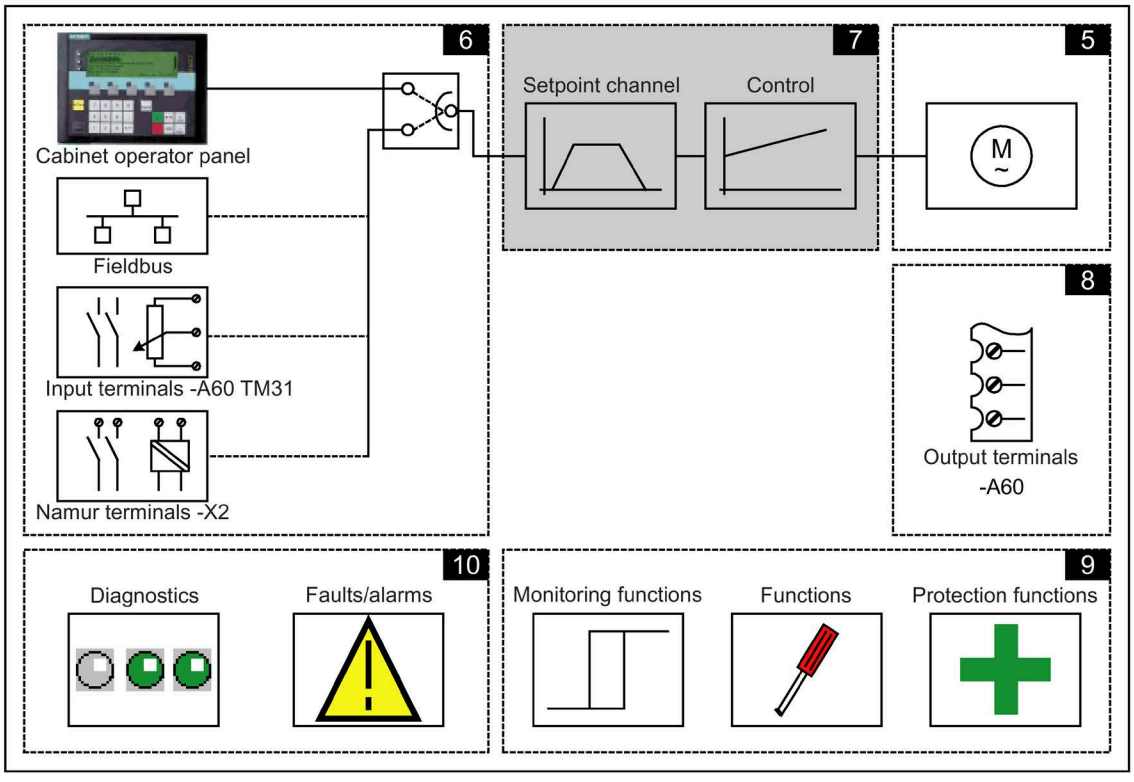

Function diagrams

At certain points in this chapter, reference is made to function diagrams. These are stored on the customer DVD in the "SINAMICS S120/S150 List Manual", which provides experienced users with detailed descriptions of all the functions.

7.2 Setpoint channel

7.2.1 Setpoint addition

Description

The supplementary setpoint can be used to enter correction values from higher-level closed-loop controls. This can be implemented using the summing point of the main/supplementary setpoint in the setpoint channel. Both variables are imported simultaneously via two separate or one setpoint source and added in the setpoint channel.

Function diagram

FD 3030	Main/added setpoint, setpoint scaling, jogging

Parameter

- p1070 Main setpoint
- p1071 Main setpoint scaling
- r1073 Main setpoint effective
- p1075 Supplementary setpoint
- p1076 Supplementary setpoint scaling
- r1077 Supplementary setpoint effective
- r1078 Total setpoint effective

7.2.2 Direction reversal

Description

Due to the direction reversal in the setpoint channel the drive can be operated in both directions with the same setpoint polarity.

Use the p1110 or p1111 parameter to block negative or positive direction of rotation.

Note

Incorrect rotating field when the cables were routed

If an incorrect phase sequence was connected when the cables were installed, and the cabling cannot be changed, the phase sequence can be changed during drive commissioning using p1821 (phase sequence direction reversal), thus enabling a direction reversal. Modifying parameter p1821 produces a direction reversal of the motor and the actual encoder value without changing the setpoint.

Preconditions

Direction reversal is initiated:

- via PROFIBUS by means of control word 1, bit 11
- via the cabinet operator panel (LOCAL mode) with the "Direction reversal" key.

Note

Delivery condition

Note that only one direction of rotation is enabled in the delivery condition when control is carried out via the AOP30.

Function diagram

FP 3040 Direction limitation and direction reversal

Parameter

- p1110 BI: Inhibit negative direction
- p1111 BI: Inhibit positive direction
- p1113 BI: Setpoint inversion
- r1114 Setpoint after direction limiting

7.2.3 Skip frequency bands and minimum speed

Description

In the case of variable-speed drives, it is possible for the control range of the overall drive train to contain bending-critical speeds that the drive must not be be operated at or the vicinity of in steady-state condition. In other words, although the drive can pass through this range, it must not remain within it because resonant oscillations may be excited. The skip frequency bands allow this range to be blocked for steady-state operation. Because the points at which critical whirling speeds occur in a drive train can vary depending on age or thermal factors, a broader control range must be blocked. To prevent constant speed step changes in the vicinity of these skip frequency bands (speeds), they are provided with a hysteresis.
The skip speed values apply in the positive and negative directions of rotation.

Specifying a minimum speed allows a specific range to be disabled around speed 0 rpm for steady-state operation.

Signal flow diagram

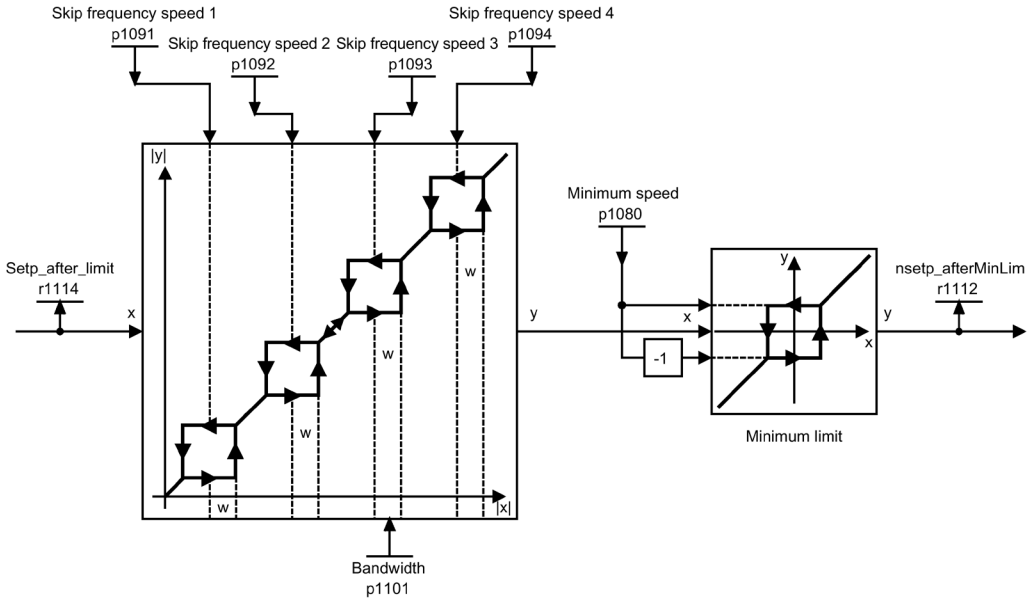

Figure 7-1 Signal flow diagram: Skip frequency bands and minimum speed

Function diagram

FP 3050 Skip frequency bands and speed limiting

Parameter

- p1080 Minimum speed
- p1091 Skip frequency speed 1
- p1092 Skip frequency speed 2
- p1093 Skip frequency speed 3
- p1094 Skip frequency speed 4
- p1098 Suppression speed scaling
- r1099.0 Suppression bandwidth status word
- p1101 Skip frequency speed bandwidth
- p1106 Minimum speed signal source
- r1112 Speed setpoint after minimum limiting

7.2.4 Speed limitation

Description

Speed limitation aims to limit the maximum permissible speed of the entire drive train to protect the drive and load machine/process against damage caused by excessive speeds.

Signal flow diagram

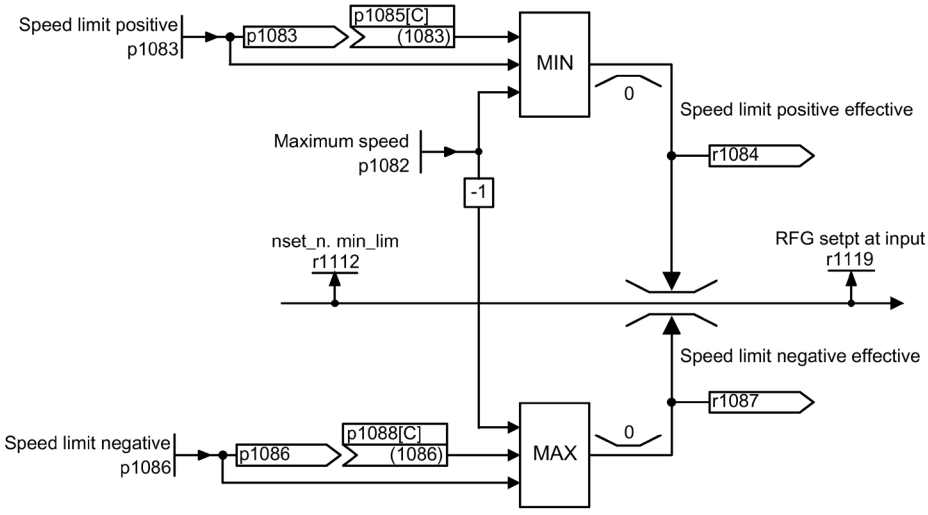

Figure 7-2 Signal flow diagram: Speed limitation

Function diagram

FP 3050 Skip frequency bands and speed limiting

Parameter

- p1082 Maximum speed
- p1083 CO: Speed limit in positive direction of rotation
- r1084 CO: Speed limit positive effective
- p1085 CI: Speed limit in positive direction of rotation
- p1086 CO: Speed limit in negative direction of rotation
- r1087 CO: Speed limit negative effective
- p1088 CI: Speed limit in negative direction of rotation
- r1119 CO: Ramp-function generator setpoint at the input

7.2.5 Ramp-function generator

Description

The ramp-function generator limits the rate at which the setpoint changes when the drive is accelerating or decelerating. This prevents excessive setpoint step changes from damaging the drive train. Additional rounding times can also be set in the lower and upper speed ranges to improve control quality and prevent load surges, thereby protecting mechanical components, such as shafts and couplings.

The ramp-up and ramp-down times each refer to the maximum speed (p1082). The rounding times that can be set can prevent the actual speed value from being overshot when the setpoint is approached, thereby improving control quality.

When final rounding set, a sudden reduction of the setpoint when ramping up can cause the setpoint to overshoot if continuous smoothing has been selected via p1134 = 0. The larger the selected final rounding time, the larger the overshoot.

Rounding is also effective in the zero crossover; in other words, when the direction is reversed, the ramp-function generator output is reduced to zero via initial rounding, the ramp-down time, and final rounding before the new, inverted setpoint is approached via initial rounding, the ramp-up time, and final rounding. Rounding times that can be set separately are active in the event of a fast stop (OFF3). The actual ramp-up/ramp-down times increase with active rounding.

The rounding type can be set using p1134 and separately activated/deactivated using p1151.0 at the zero point.

The ramp-up time (p1120) can be scaled using connector input p1138, the ramp-down time (p1121) using connector input p1139. Scaling is deactivated in the factory setting.

Note

Effective ramp-up time

The effective ramp-up time increases when you enter the initial and final rounding times.

Effective ramp-up time = p1120 + (0.5 x p1130) + (0.5 x p1131)

Signal flow diagram

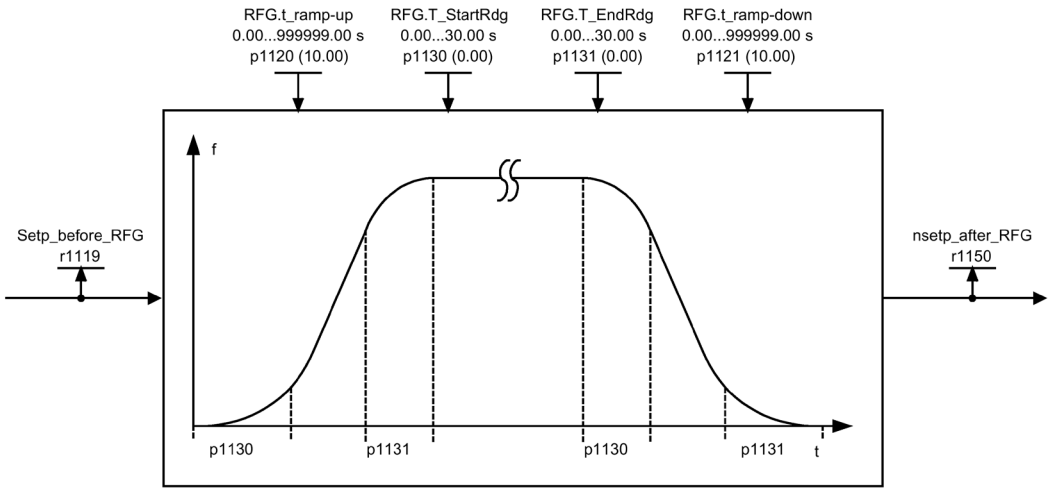

Figure 7-3 Signal flow diagram: Ramp-function generator

Ramp-function generator tracking

If the drive is in range of the torque limits, the actual speed value moves away from the speed setpoint. The ramp-function generator tracking updates the speed setpoint in line with the actual speed value and so levels the ramp.

p1145 can be used to deactivate ramp-function generator tracking (p1145 = 0) or to set the permissible deviation (p1145 > 1). If the permissible deviation is reached, then the speed setpoint at the ramp-function generator output will only be increased further in proportion to the speed setpoint.

Parameters p1151.1 and p1151.2 can be used to set as to whether ramp-function generator tracking is realized with or without polarity change.

Parameter r1199.5 displays whether the ramp-function generator tracking is active.

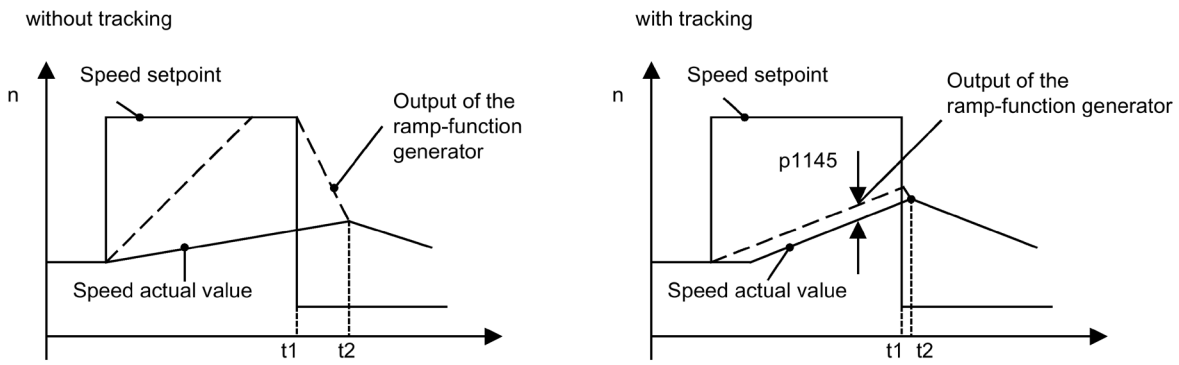

Figure 7-4 Ramp-function generator tracking

Without ramp-function generator tracking

- p1145 = 0
- Drive accelerates to t2, although the setpoint after t1 is smaller than the actual value

With ramp-function generator tracking

- At p1145 > 1 (values between 0 and 1 are not applicable), ramp-function generator tracking is activated when the torque limit is approached. The ramp-function generator output thereby only exceeds the actual speed value by the deviation value defined in p1145.
- t1 and t2 are almost identical

Function diagram

FP 3070	Extended ramp-function generator
FP 3080	Ramp-function generator selection, status word, tracking

Parameter

- r1119 CO: Ramp-function generator setpoint at the input
- p1120 Ramp-function generator ramp-up time
- p1121 Ramp-function generator ramp-down time
- p1130 Ramp-function generator initial rounding time
- p1131 Ramp-function generator final rounding time
- p1134 Ramp-function generator rounding type
- p1135 OFF3 ramp-down time
- p1136 OFF3 initial rounding time
- p1137 OFF3 final rounding time
- p1138 CI: Ramp-function generator ramp-up time scaling
- p1139 CI: Ramp-function generator, ramp-down time
- p1140 BI: Enable ramp-function generator/disable ramp-function generator
- p1141 BI: Continue ramp-function generator/freeze ramp-function generator
- p1142 BI: Enable setpoint/inhibit setpoint
- P1143 BI: Accept ramp-function generator setting value
- P1144 CI: Ramp-function generator setting value
- p1145 Ramp-function generator tracking intensity
- P1148 Ramp function generator tolerance for ramp-up and ramp-down active
- r1149 CO: Ramp-function generator acceleration
- r1150 Ramp-function generator speed setpoint at the output
- p1151 Ramp-function generator configuration
- r1199.0...8 Ramp-function generator status word

7.3 V/f control

Description

The simplest control technique is the U/f characteristic. whereby the stator voltage for the induction motor or synchronous motor is controlled proportionately to the stator frequency. This method has proved successful in a wide range of applications with low dynamic requirements, such as:

- Pumps and fans
- Belt drives
- Multi-motor drives

The objective of U/f control is to maintain a constant flux Φ in the motor. whereby the flux is proportional to the magnetization current (Iμ) or the ratio of voltage (U) to frequency (f).

Φ ~ Iμ ~ U/f

The torque (M) generated by the induction motors is, in turn, proportional to the product (or, more precisely, the vector product (Φ x I)) of the flux and current.

M ~ Φ x I

To generate as much torque as possible with a given current, the motor must function using the greatest possible constant flux. To maintain a constant flux (Φ), therefore, the voltage (V) must change in proportion to the frequency (f) to ensure a constant magnetization current (Iμ). The U/f characteristic control is derived from these principles.

The field-weakening range is above the rated motor frequency, where the maximum voltage is reached. The flux and maximum torque decrease as the frequency increases; this is illustrated in the following diagram.

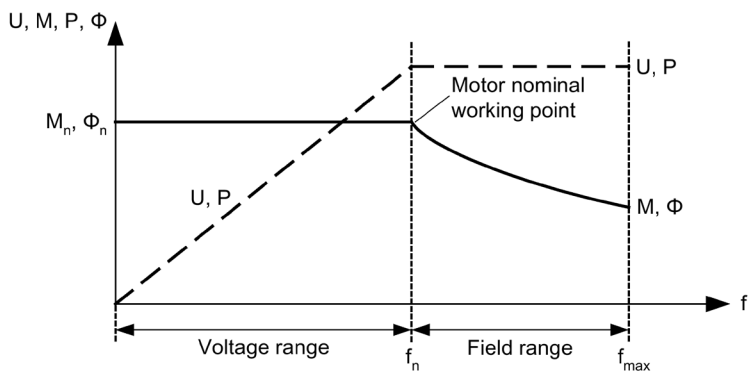

Figure 7-5 Operating areas and characteristic curves for the induction motor with converter supply

Note

Ratio between the rated motor current and the rated device current

For U/f control, the permissible range of the ratio between the rated motor current (p0305) and rated device current (r0207) is 1:1 to 1:12.

Several variations of the U/f characteristic exist, which are shown in the following table:

Table 7- 1 p1300 U/f characteristics

Parameter value	Meaning	Application / property	
0	Linear characteristic	Standard with variable voltage boost	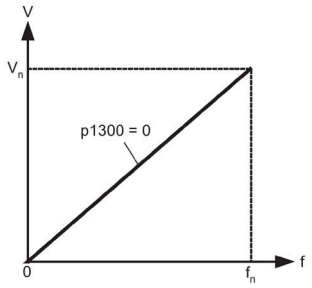
1	Linear characteristic with flux current control (FCC)	Characteristic that compensates for voltage losses in the stator resistance for static/dynamic loads (Flux Current Control FCC). This is especially relevant for small motors as these have a relatively high stator resistance.	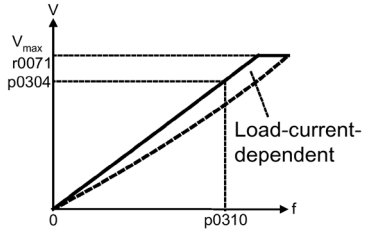
2	Parabolic characteristic	Characteristic that takes into account the motor torque curve (e.g. fan/pump). • Quadratic characteristic (f^2 characteristic) • Energy saving because the low voltage also results in small currents and losses.	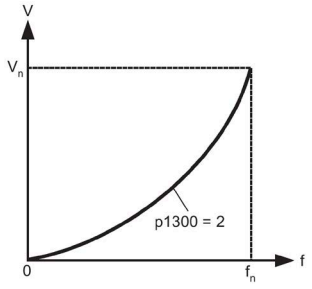
3	Programmable characteristic	Characteristic that takes into account the motor/driven machine torque characteristic.	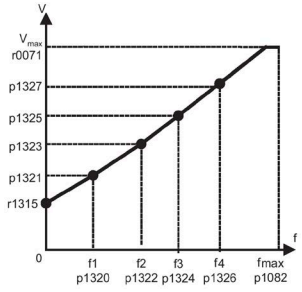
4	Linear characteristic and ECO	Characteristic (see parameter value 0) and Eco mode at a constant operating point. • At constant operating point, the efficiency is optimized by varying the voltage. • Active slip compensation is necessary here; the scaling must be set so that the slip is fully compensated (p1335 = 100%).	

Parameter value	Meaning	Application / property
5	Precise frequency drives (textiles)	Characteristic (see parameter value 0) that takes into account the specific technological features of an application (e.g. textile applications). • The current limiting (Imax controller) only affects the output voltage and not the output frequency. • The slip compensation and resonance damping are disabled.
6	Precise frequency drives with flux current control (FCC)	Characteristic (see parameter value 1) that takes into account the specific technological features of an application (e.g. textile applications). • The current limiting (Imax controller) only affects the output voltage and not the output frequency. • The slip compensation and resonance damping are disabled. Voltage losses in the stator resistance for static / dynamic loads are also compensated (flux current control, FCC). This is particularly useful for small motors, since they have a relatively high stator resistance.
7	Parabolic characteristic and ECO	Characteristic (see parameter value 1) and Eco mode at a constant operating point. • At constant operating point, the efficiency is optimized by varying the voltage. • Active slip compensation is necessary here; the scaling must be set so that the slip is fully compensated (p1335 = 100%).
19	Independent voltage setpoint	The user can define the output voltage of the converter independently of the frequency using BICO parameter p1330 via the interfaces (e.g. analog input AI0 of the TM31 –> p1330 = r4055[0]).

Function diagram

FP 6300 U/f control, overview
FP 6301 U/f characteristic and voltage boost

Parameter

- p1300 Open-loop/closed-loop control operating mode
- p1302 U/f control configuration
- p1320 U/f control programmable characteristic frequency 1

  ...
- p1327 U/f control programmable characteristic voltage 4
- p1330 CI: U/f control independent of voltage setpoint
- p1331 Voltage limitation
- p1333 U/f control FCC starting frequency
- r1348 U/f control Eco factor actual value
- p1350 U/f control soft starting

7.3.1 Voltage boost

Description

With low output frequencies, the U/f characteristics yield only a small output voltage.

Further, at low frequencies the ohmic resistance of the stator windings has an effect and can no longer be ignored with respect to the machine reactance. Therefore, at low frequencies the magnetic flux is no longer proportional to the magnetization current or the U/f ratio.

There are several reasons for using the "Voltage boost" function:

- Magnetization build-up of an induction motor at n = 0 rpm
- Establishing a torque at n = 0 rpm, e.g. in order to hold a load
- Applying a breakaway, acceleration or braking torque
- Compensating ohmic losses in the windings and feeder cables

You can choose whether the voltage boost is to be active permanently (p1310) or only during acceleration (p1311). In addition, a one-off voltage boost in the first power up after pulse enable can be set via p1312.

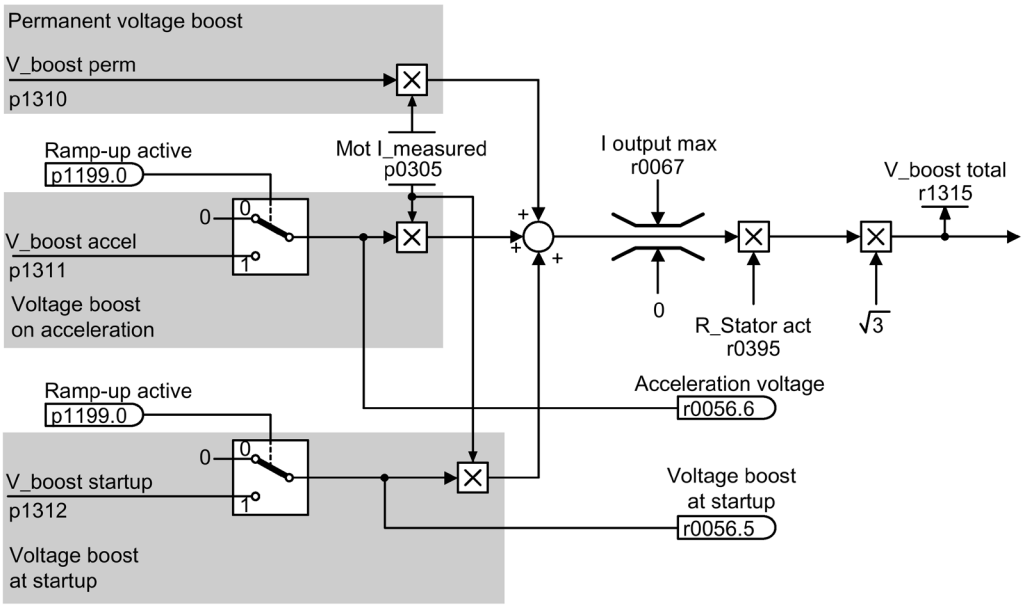

Figure 7-6 Voltage boost total

Note

Voltage boost effect

The voltage boost affects all U/f characteristics (p1300).

Note

Excessive motor temperature rise

If the voltage boost value is too high, this can result in a thermal overload of the motor winding and in turn a shutdown.

Permanent voltage boost (p1310)

The voltage boost is active across the entire frequency range up to the rated frequency f_n; at higher frequencies, the value decreases continuously.

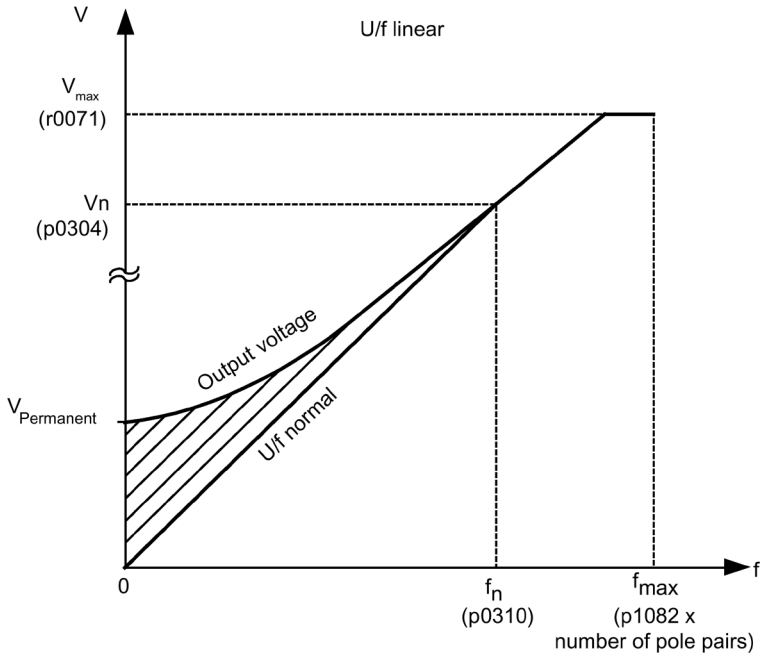

Figure 7-7 Permanent voltage boost (example: p1300 = 0, p1310 > 0, p1311 = p1312 = 0)

Voltage boost during acceleration (p1311)

The voltage boost is only effective for one acceleration operation and only until the setpoint is reached.

Voltage boost is only effective if the signal "ramp-up active" (r1199.0 = 1) is active.

You can use parameter r0056.6 to observe whether the voltage boost is active during acceleration.

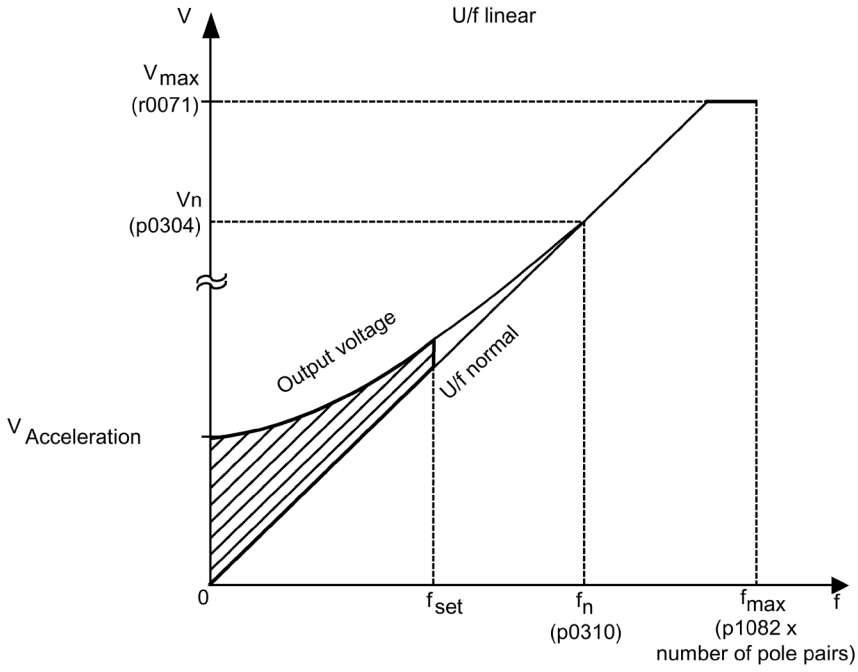

Figure 7-8 Voltage boost during acceleration (example: p1300 = 0, p1310 = 0, p1311 > 0)

Voltage boost at startup (p1312)

The voltage boost is only effective for the first acceleration operation after pulse enable and only until the setpoint is reached.

Voltage boost is only effective if the signal "ramp-up active" (r1199.0 = 1) is active.

You can use parameter r0056.5 to observe whether the voltage boost is active at startup.

Function diagram

FP 6301 U/f characteristic and voltage boost

Parameter

- r0056.5 Voltage boost at startup active/inactive
- r0056.6 Acceleration voltage active/inactive
- p0304 Rated motor voltage
- p0305 Rated motor current
- r0395 Stator resistance, actual
- p1310 Starting current (voltage boost) permanent
- p1311 Starting current (voltage boost) when accelerating
- p1312 Starting current (voltage boost) when starting
- r1315 Voltage boost total

7.3.2 Resonance damping

Description

Resonance damping damps oscillations in the active current, which often occur during no-load operation.

Resonance damping is active in a range between 5 % and 90 % of the rated motor frequency (p0310). The switch-off frequency is determined by p1349.

For p1300 = 5 and 6 (textiles) the resonance damping is internally disabled in order to be able to precisely set the output frequency.

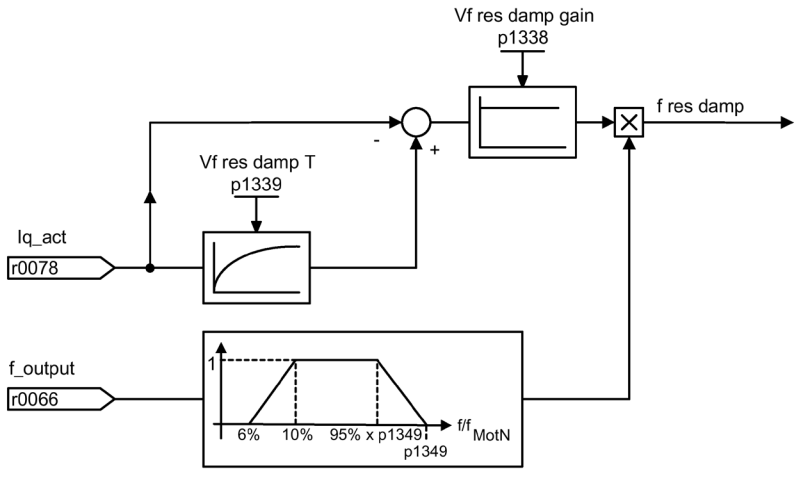

Figure 7-9 Resonance damping

Note

Maximum frequency resonance damping

When p1349 = 0, the changeover limit is automatically set to 95 % of the rated motor frequency, but only up to a maximum of 45 Hz.

Function diagram

FP 6310 Resonance damping and slip compensation

Parameters

- r0066 Output frequency
- r0078 torque-generating actual current value
- p1338 U/f control resonance damping gain
- p1339 U/f control resonance damping filter time constant
- p1349 U/f control resonance damping maximum frequency

7.3.3 Slip compensation

Description

The slip compensation acts so that the speed of induction motors is essentially kept constant independent of the load (M_1 or M_2).
When the load is increased from M_1 to M_2, the setpoint frequency is increased automatically so that the resulting frequency, and therefore also the motor speed, remain constant. For a decrease in the load from M_2 to M_1, the setpoint frequency is automatically decreased accordingly.

For p1300 = 4 and 7 (U/f controls with ECO), the slip compensation must be activated to ensure correct operation.

For p1300 = 5 and 6 (textiles) the slip compensation is internally disabled in order to be able to precisely set the output frequency.

If a motor holding brake is applied, a setting value can be specified at the slip compensation output via p1351. A parameter setting of p1351 > 0 automatically activates the slip compensation (p1335 = 100 %).

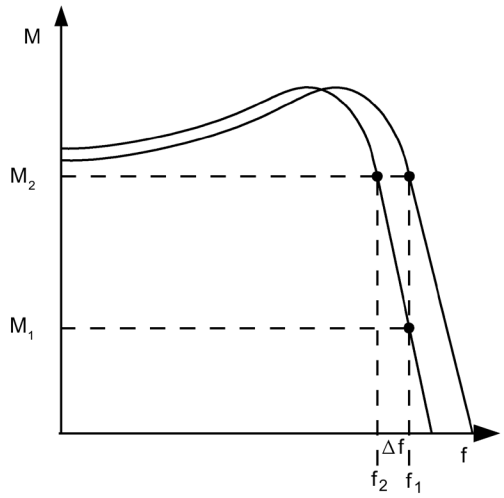

Figure 7-10 Slip compensation

Function diagram

FP 6310	Resonance damping and slip compensation

Parameters

- r0330 Rated motor slip
- p1334 Slip compensation start frequency
- p1335 Slip compensation, scaling
  p1335 = 0.0%: slip compensation is deactivated.
  p1335 = 100.0%: slip is fully compensated.
- p1336 Slip compensation limit value
- r1337 CO: Actual slip compensation
- p1351 CO: Motor holding brake start frequency

7.4 Vector speed/torque control with/without encoder

Description

Compared with U/f control, vector control offers the following benefits:

- Stability vis-à-vis load and setpoint changes
- Short rise times with setpoint changes (–> better command behavior)
- Short settling times with load changes (–> better disturbance characteristic)
- Acceleration and braking are possible with maximum settable torque
- Motor protection due to variable torque limitation in motor and regenerative mode
- Drive and braking torque controlled independently of the speed
- Maximum breakaway torque possible at speed 0

These benefits are available without speed feedback.

Vector control can be used with or without an encoder.

The following criteria indicate when an encoder is required:

- High speed accuracy is required
- High dynamic response requirements
  - Better control behavior
  - Better response to disturbances
- Torque control is required in a control range greater than 1:10
- A defined and/or variable torque should be maintained for speeds below approx. 10 % of the rated motor frequency (p0310)
- A speed controller is normally always required for applications in which an unknown speed can represent a safety risk (where a load can drop, e.g. lifting gear, elevators, ...).

With regard to setpoint input, vector control is divided into:

- Speed control
- Torque/current control (in short: torque control)

7.4.1 Vector control without encoder

Description

For sensorless vector control only (SLVC: Sensorless Vector Control), the position of the flux and actual speed must be determined via the electric motor model. The model is buffered by the incoming currents and voltages. At low frequencies (approx. 0 Hz), the model cannot determine the speed.

For this reason and due to uncertainties in the model parameters or inaccurate measurements, the system is switched from closed-loop to open-loop operation in this range.

The switchover between closed-loop/open-loop controlled operation is controlled on the basis of time and frequency conditions (p1755, p1756, p1758 - only for induction motors). The system does not wait for the time condition to elapse if the setpoint frequency at the ramp-function generator input and the actual frequency are below p1755 x (1 - (p1756 / 100 %)) simultaneously.

The transition from open-loop to closed-loop operation always takes place when the changeover speed in p1755 is exceeded (characteristic ① in the diagram below). If the speed increase is set very slow and a changeover delay time > 0 is set in p1759, then the transition takes place after the changeover delay time (characteristic ② in the diagram below).

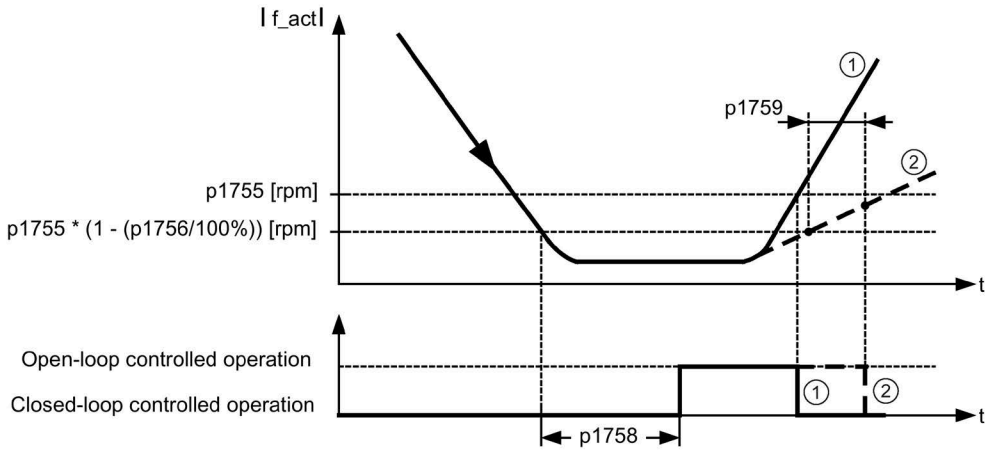

Figure 7-11 Changeover conditions

Setting the torque setpoint

In open-loop operation, the calculated actual speed value is the same as the setpoint value. For vertical loads and when accelerating, parameters p1610 (static torque setpoint) and p1611 (additional acceleration torque) must be adjusted to the necessary maximum torque in order to generate the static or dynamic load torque of the drive.

- If, for an induction motor, p1610 is set to 0 %, then only the magnetization current r0331 is impressed.
  If a value of 100 % is set, then the rated motor current p0305 is impressed.
- For permanent-magnet synchronous motors, at p1610 = 0%, a pre-control absolute value derived from the supplementary torque r1515 remains instead of the magnetizing current for induction motors.

To ensure that the drive does not stall during acceleration, p1611 can be increased or acceleration pre-control for the speed controller can be used. This is also advisable to ensure that the motor is not subject to thermal overload at low speeds.

If the moment of inertia of the drive is almost constant, acceleration precontrol using p1496 offers more advantages than the supplementary accelerating torque with p1611. For the rotating measurement, the moment of inertia of the drive is determined using p1900 = 3 and p1960 = 1.

Features of the vector control without actual value speed encoder

Vector control without a speed sensor has the following characteristics at low frequencies:

- Closed-loop controlled operation for passive loads up to approx. 0 Hz output frequency (p0500 = 2), for p1750.2 = 1 and p1750.3 = 1).
- Start an induction motor in the closed-loop controlled mode (after the motor has been completely excited), if the speed setpoint before the ramp-function generator is greater than p1755.
- Reversing without the need to switch into the open-loop controlled mode is possible, if the range of the changeover speed (p1755) is passed through in a shorter time than the changeover wait time set (p1758), and the speed setpoint before the ramp-function generator lies outside the open-loop controlled speed range (p1755).
- In the "Torque control" mode, at low speeds, the system always switches over into the open-loop controlled mode.

Note

Precondition

In this case, the speed setpoint upstream of the ramp-function generator must be greater than the changeover speed in p1755.

Advantages of closed-loop controlled operation down to f = 0 Hz

Closed-loop operation to approx. 0 Hz (can be set using parameter p1755) and the possibility to start or reverse at 0 Hz directly in closed-loop controlled operation (can be set using parameter p1750) result in the following benefits:

- No switchover operation required within closed-loop control (bumpless behavior, no frequency dips, no discontinuities in the torque).
- Closed-loop speed control without encoder down to and including 0 Hz
- Passive loads down to a frequency of 0 Hz
- Steady-state closed-loop speed control down to approx. 0 Hz possible
- Higher dynamic performance when compared to open-loop controlled operation

Note

Automatic changeover

If, in the closed-loop controlled mode, start from 0 Hz or reversing takes longer than 2 s, or the time set in p1758 - then the system automatically changes over from closed-loop controlled into open-loop controlled operation.

Note

Operation in sensorless torque control

Operation in sensor less torque control only makes sense if, in the speed range below the changeover speed of the motor model (p1755), the setpoint torque is greater than the load torque. The drive must be able to follow the setpoint and the associated setpoint speed (p1499).

Closed-loop operation down to standstill for passive loads

By restricting to a passive load at the starting point, it is possible to maintain stationary closed-loop operation down to zero frequency (standstill) without having to change over to open-loop operation.

Parameter p1750.2 = 1 must be set.

The closed-loop control without switchover is restricted to applications involving passive loads:
These include applications in which the load cannot produce a regenerative torque when starting and the motor comes to a standstill when pulses are inhibited; for example, loads with high moments of inertia, brakes, pumps, fans, centrifuges, extruders, ...

Standstill of any duration is possible without holding current, only the motor magnetization current is impressed.

Steady-state regenerative operation at a frequency close to 0 Hz is not possible.

It is also possible to select sensorless control for passive loads during commissioning by setting p0500 = 2 (technology application = passive loads (for sensorless control down to f = 0)).

This function is activated automatically if quick commissioning is exited with p3900 > 0, or if automatic calculation is called (p0340 = 1, 3, 5 or p0578 = 1).

Blocking drives

If the load torque is higher than the torque limiting of the sensorless vector control, the drive is braked to zero speed (standstill). To avoid open-loop controlled mode being selected after the time p1758, p1750.6 can be set to 1. Under certain circumstances p2177 (Motor blocked delay time) must be increased.

Note

Exception for reversing drives

It is not permissible to use this setting if the load can force the drive to reverse.

Active loads

Active loads, with which the drive can be reversed, must be started with open-loop speed control (e.g. hoisting gear). In this case, bit p1750.6 must be set to 0 (open-loop controlled operation when the motor is blocked). The static (steady state) torque setpoint (p1610) must be greater than the maximum occurring load torque.

Note

Loads that can drive the motor

For applications with high regenerative load torques at low speeds, p1750.7 can also be set to 1 As a result, the speed changeover limits of the motor model are increased and a faster changeover can be made into open-loop controlled operation.

Permanent-magnet synchronous motors

Standard procedure: open-loop controlled operation at low speeds

Permanent-magnet synchronous motors are normally started and reversed in open-loop controlled operation. The changeover speeds are set to 10% as well as 5% of the rated motor speed. Changeover is not subject to any time condition (p1758 is not evaluated). Prevailing load torques (motor or regenerative) are adapted in open-loop operation, facilitating constant-torque crossover to closed-loop operation even under high static loads. Whenever the pulses are enabled, the rotor position is identified.

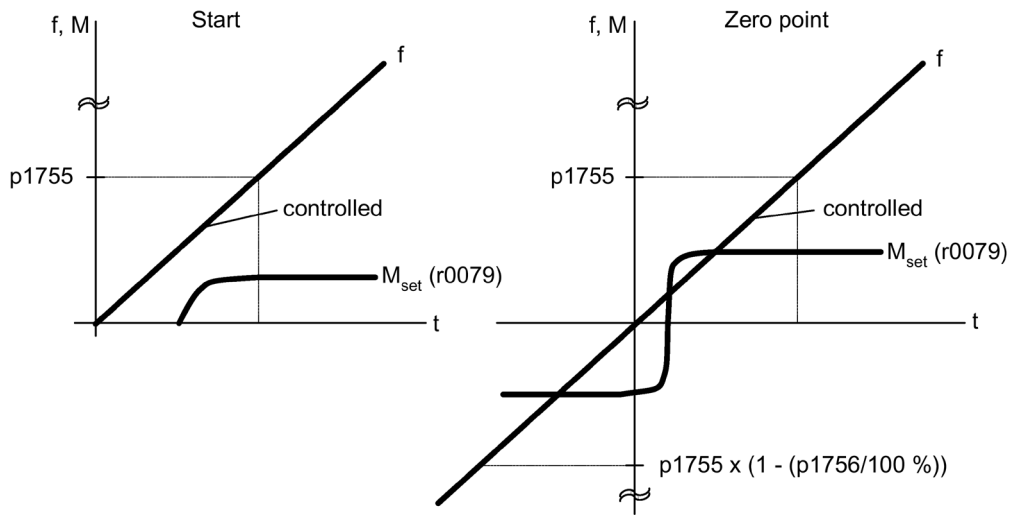

Figure 7-12 Zero crossing in open-loop controlled operation at low speeds

Extended method: closed-loop controlled operation to zero speed

By superimposing high-frequency pulses on the driving fundamental voltage and evaluating the resulting offset pulse in the machine current, it is possible to determine the continuous rotor position up to frequency zero (standstill).

1FW4 and 1PH8 series Siemens torque motors can be started from standstill with any load up to the rated torque or even hold the load at standstill.

The procedure is suitable for motors with internal magnets.

Note

Use of a sine-wave filter

If a sine-wave filter is used, the open-loop controlled procedure should be used.

The following advantages are obtained by maintaining closed-loop controlled operation:

- No switchover required within closed-loop control (smooth switching, no discontinuities in the torque).
- Sensorless closed-loop speed and torque control down to and including 0 Hz
- Higher dynamic performance when compared to open-loop controlled operation.
- Encoderless operation of drive line-ups (e.g. in the paper industry, master-slave operation).
- Active (including hanging/suspended) loads down to zero frequency.

Supplementary conditions for the use of third-party motors:

- Experience shows that the procedure is very suitable for motors with magnets within the rotor core (IPMSM - Interior Permanent Magnet Synchronous Motors).
- The ratio of stator quadrature reactance (Lsq): Stator direct-axis reactance (Lsd) must be > 1 (recommendation: minimum > 1.5).
- The possible operating limits of the procedure depend upon up to what current the asymmetrical reactance ratio (Lsq:Lsd) is retained in the motor. If the procedure should be operable up to the rated motor torque, then the reactance ratio must be retained up to the rated motor current.

A prerequisite for optimum behavior is the entry of the following parameters:

- Enter the saturation characteristic: p0362 - p0369
- Enter the load characteristic: p0398, p0399

Commissioning sequence for closed-loop controlled operation to zero speed:

- Run through the commissioning with motor identification at standstill.
- Enter the parameters for the saturation characteristic and the load characteristic.
- Activate closed-loop controlled operation down to zero speed using parameter p1750.5 = 1.

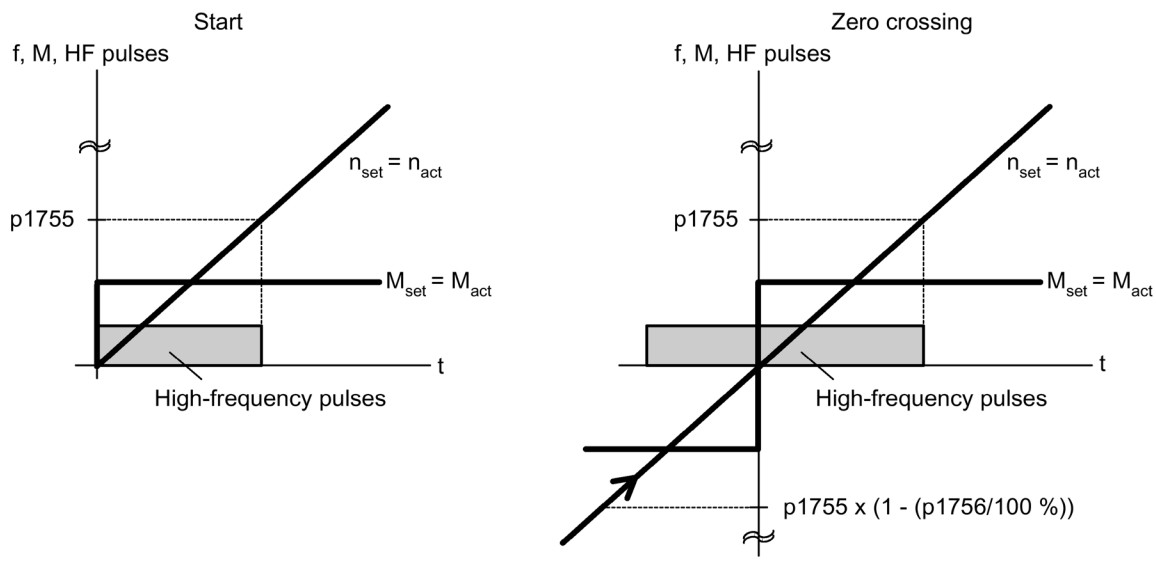

Figure 7-13 Zero crossing in closed-loop controlled operation to zero speed

Function diagram

FP 6730	Interface to Motor Module (ASM), p0300 = 1)
FP 6731	Interface to Motor Module (PEM), p0300 = 2)

Parameters

- p0305 Rated motor current
- r0331 Motor magnetizing current/short-circuit current
- p0362 Saturation characteristic flux 1
  ...
  p0365 Saturation characteristic flux 4
- p0366 Saturation characteristic I_mag 1
  ...
  p0369 Saturation characteristic I_mag 4
- p0398 Magnet angle. Decoupling (cross saturation) coefficient 1
- p0398 Magnet angle. Decoupling (cross saturation) coefficient 3
- p0500 Technology application
- p0578 Calculating technology/unit-dependent parameters
- p1605 Pulse technique pattern configuration
- r1606 CO: Actual pulse technique pattern
- p1607 Pulse technique stimulus
- r1608 CO: Pulse technique answer
- p1610 Torque setpoint static (SLVC)
- p1611 Supplementary accelerating torque (SLVC)
- p1750 Motor model configuration
- p1755 Motor model changeover speed encoderless operation
- p1756 Motor model changeover speed hysteresis
- p1758 Motor model changeover delay time, closed/open-loop control
- p1759 Motor model changeover delay time open/closed loop control
- r1762.1 Motor model deviation component 1 - deviation model 2
- p1798 Motor model pulse technique speed adaptation Kp
- p1810.3 Modulator configuration - current measurement oversampling activated (for pulse technique PEM)

7.4.2 Vector control with encoder

Description

Benefits of vector control with an encoder:

- The speed can be controlled right down to 0 Hz (standstill)
- Stable control response throughout the entire speed range
- Allows a defined and/or variable torque for speeds below approx. 10% of the rated motor speed to be maintained
- Compared with speed control without an encoder, the dynamic response of drives with an encoder is significantly better because the speed is measured directly and integrated in the model created for the current components.

Motor model change

A model change takes place between the current model and the observer model within the speed range p1752 x (100 % - p1753) and p1752. In the current-model range (i.e., at lower speeds), torque accuracy depends on whether thermal tracking of the rotor resistance is carried out correctly. In the observer-model range and at speeds of less than approx. 20% of the rated speed, torque accuracy depends primarily on whether thermal tracking of the stator resistance is carried out correctly. If the resistance of the supply cable is greater than 20 to 30 % of the total resistance, this should be entered in p0352 before motor data identification is carried out (p1900/p1910).

To deactivate thermal adaptation, set p0620 = 0. This may be necessary if adaptation cannot function accurately enough due to the following general conditions.

Causes of inaccuracies:

- A sensor is not used for the temperature measurement and the ambient temperatures fluctuate significantly.
- The motor overtemperatures (p0626 to p0628) deviate greatly from the default settings as a result of its design.

Function diagram

FP 4715	Actual speed value and rotor position measurement, motor encoder
FD 6030	Speed setpoint, droop
FP 6040	Speed controller with/without encoder
FP 6050	Speed controller adaptation (Kp_n/Tn_n adaptation)
FP 6060	Torque setpoint
FP 6490	Speed control configuration

7.4.3 Actual speed value filter

Description

The speed actual value filter is used to suppress cyclic disturbance variables in speed acquisition.

The speed actual value filter can be set as follows:

- 2nd order lowpass (PT2: -40 dB/decade)
- General 2nd order filter

Bandstop and low-pass with reduction are converted into the parameters of the general 2nd order filter using STARTER.

The speed actual value filter is activated with p1656.4 = 1. The properties of the speed actual value filter are set in p1677 to p1681.

As long as changes to the data of the actual speed value filter are being made, the conversion of the new filter data can be prevented using p1699 = 1.
When p1699 = 0 is set, the calculation will be performed and the new values applied.

Note

For the vector control, there are 2 current setpoint filters and one actual speed value filter. The actual speed value filter has been allocated the number "5".

Function diagrams

FP 4715	Encoder evaluation - speed actual value and pole position sensing, motor encoder (encoder1), n_act_filter 5

Parameters

- p1655[4] CI: Speed actual value filter 5 natural frequency tuning
- p1656.4 Speed actual value filter 5 activation
- p1677 Actual speed value filter 5 type
- p1678 Actual speed value filter 5 denominator natural frequency
- p1679 Actual speed value filter 5 denominator damping
- p1680 Actual speed value filter 5 numerator natural frequency
- p1681 Actual speed value filter 5 numerator damping
- p1699 Filter data acceptance

7.4.4 Speed controller

Both closed-loop control techniques with and without encoder (SLVC, VC) have the same speed controller structure that contains the following components as kernel:

- PI controller
- Speed controller pre-control
- Droop Function

The torque setpoint is generated from the total of the output variables and reduced to the permissible magnitude by means of torque setpoint limitation.

Function of the speed controller

The speed controller receives its setpoint (r0062) from the setpoint channel and its actual value (r0063) either directly from the speed actual value encoder (vector control with encoder) or indirectly via the motor model (encoderless vector control). The system difference is increased by the PI controller and, in conjunction with the pre-control, results in the torque setpoint.

When the load torque increases, the speed setpoint is reduced proportionately when the droop function is active, which means that the single drive within a group (two or more mechanically connected motors) is relieved when the torque becomes too great.

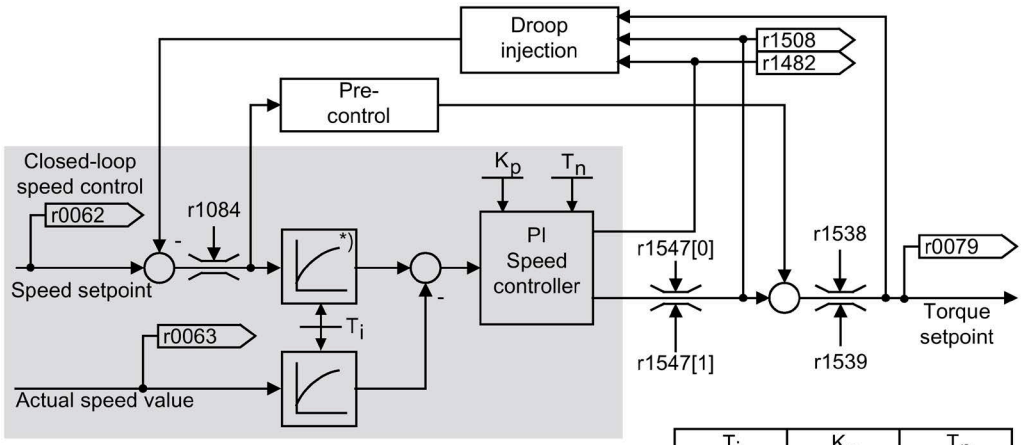

	T_i	K_p	T_n
SLVC:	p1452	p1470	p1472
VC:	p1442	p1460	p1462

Figure 7-14 Speed controller

The optimum speed controller setting can be determined via the automatic speed controller optimization function (p1900 = 1, rotating measurement).

If the moment of inertia has been specified, the speed controller (Kp, Tn) can be calculated by means of automatic parameterization (p0340 = 4). The controller parameters are defined in accordance with the symmetrical optimum as follows:

Tn = 4 x Ts

Kp = 0.5 x r0345 / Ts = 2 x r0345 / Tn

Ts = Sum of the short delay times (includes p1442 and p1452).

If vibrations occur with these settings, the speed controller gain (Kp) will need to be reduced manually. Actual-speed-value smoothing can also be increased (standard procedure for gearless or high-frequency torsion vibrations) and the controller calculation performed again because this value is also used to calculate Kp and Tn.

The following relationships apply for optimization:

- If Kp is increased, the controller becomes faster, although overshoot is increased. However, signal ripples and vibrations in the speed control loop will increase.
- Although reducing Tn will also speed up the controller, it will increase overshoot.

When setting speed control manually, you are advised to define the dynamic response via Kp (and actual-speed-value smoothing) first, so that the integral time can subsequently be reduced as much as possible. Please remember that closed-loop control must also remain stable in the field-weakening range.

To suppress any vibrations that occur in the speed controller, it is usually only necessary to increase the smoothing time in p1452 for operation without an encoder or p1442 for operation with an encoder, or reduce the controller gain.

The integral output of the speed controller can be monitored via r1482 and the limited controller output via r1508 (torque setpoint).

Note

Reduced dynamic response for encoderless operation

In comparison with speed control with an encoder, the dynamic response of drives without an encoder is significantly reduced. The actual speed is derived by means of a model calculation based on the converter output variables for current and voltage that have a corresponding interference level. To this end, the actual speed must be adjusted by means of filter algorithms in the software.

Speed controller response when a brake is opened

After a motor has been a magnetized, "Open brake" is controlled. The value that the BICO input delivers defines the speed controller response:

- BICO input p1475 (torque setting value for the motor holding brake) supplies a value of 0:
  - The speed controller I component is immediately enabled; this means that the system can respond to a slipping load and establish a holding torque.
  - Depending on the parameter assignment, the speed setpoint remains inhibited until the brake opening time has elapsed (p1275.6 = 0) - or until the brake feedback signal is received (p1275.6 = 1).
- BICO input p1475 (torque setting value for the motor holding brake) supplies a value ≠ 0:
  - The speed controller I component is held at the specified setting value until the "Brake open" feedback signal is received.
  - Only then are the speed controller I component and the speed setpoint enabled.

Function diagram

FP 6040 Speed controller with/without encoder

Parameters

- r0062 CO: Speed setpoint after the filter
- r0063 CO: Actual speed value smoothed
- p0340 Automatic calculation of motor/control parameters
- r0345 Rated motor startup time
- p1442 Speed controller actual speed value smoothing time
- p1452 Speed controller actual speed value smoothing time (without encoder)
- p1460 Speed controller P gain adaptation speed lower
- p1462 Speed controller integral time adaptation speed lower
- p1470 Speed controller encoderless operation P gain
- p1472 Speed controller encoderless operation integral time
- p1475 CI: Speed controller torque setting value for motor holding brake
- p1478 CI: Speed controller integrator setting value
- r1482 CO: Speed controller I torque output
- r1508 CO: Torque setpoint before supplementary torque
- p1960 Rotating measurement selection

7.4.4.1 Examples of speed controller settings

Examples of speed controller settings for vector control with encoders

A number of examples of speed controller settings with vector control without encoders (p1300 = 20) are provided below. These should not be considered to be generally valid and must be checked in terms of the control response required.

- **Fans (large centrifugal masses) and pumps**

  Kp (p1470) = 2 ... 10

  Tn (p1472) = 250 ... 500 ms

  The Kp = 2 and Tn = 500 ms settings result in asymptotic approximation of the actual speed to the setpoint speed after a setpoint step change. During many simple control procedures, this is satisfactory for pumps and fans.

- **Stone mills, separators (large centrifugal masses)**

  Kp (p1470) = 12 ... 20

  Tn (p1472) = 500 ... 1000 ms

- **Kneader drives**

  Kp (p1470) = 10

  Tn (p1472) = 200 ... 400 ms

Note

Check speed control gain

We recommend checking the effective speed control gain (r1468) during operation. If this value changes during operation, Kp adaptation is being used (p1400.5 = 1). Kp adaptation can, if necessary, be deactivated or its behavior changed.

Examples of speed controller settings for vector control with encoders

A number of examples of speed controller settings with vector control with encoders (p1300 = 21) are provided below. These should not be considered to be generally valid and must be checked in terms of the control response required.

- **Positioning, lifting gear, travel drives**

  Kp (p1460) = 10 ... 15

  Tn (p1462) = 200 ... 400 ms (values <= 200 ms are useful for positioning tasks in order to avoid overshooting the limit position.)

  Actual value smoothing (p1442) = 4 ... 10 ms

- **Sugar centrifuge (large centrifugal masses)**

  Kp (p1460) = 15 ... 22

  Tn (p1462) = 500 ... 1000 ms

  Actual value smoothing (p1442) = 50 ms

Note

Inadequate dynamic response

The dynamic response may be insufficient if the specified current or torque limits are reached during acceleration or deceleration.

7.4.4.2 Speed controller pre-control (integrated pre-control with balancing)

Description

The command behavior of the speed control loop can be improved by calculating the accelerating torque from the speed setpoint and connecting it on the line side of the speed controller. This torque setpoint mv is applied directly as an additive reference variable on the input side/supply side of the current controller by means of adaptation elements (enabled via p1496).
The torque setpoint (mv) is calculated from:

mv = p1496 x J x (dn/dt) = p1496 x p0341 x p0342 x (dn/dt)

The motor moment of inertia p0341 is calculated when commissioning the drive system. The factor p0342 between the total moment of inertia J and the motor moment of inertia must be determined manually or by optimizing the speed controller. The acceleration is calculated from the speed difference over the time dn/dt.

Note

When using speed controller optimization

When optimizing the speed controller, the ratio between the total moment of inertia and that of the motor (p0342) is determined and acceleration precontrol scaling (p1496) is set to 100 %.

If p1400.2 = p1400.3 = 0, then the pre-control balancing is automatically set.

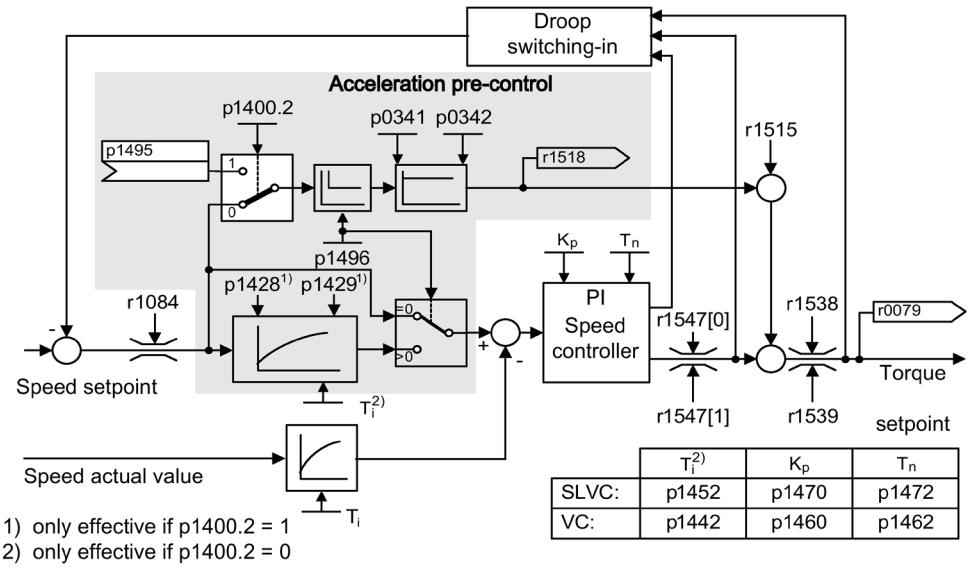

	T_i[2]	K_p	T_n
SLVC:	p1452	p1470	p1472
VC:	p1442	p1460	p1462

Figure 7-15 Speed controller with pre-control

When correctly adapted, when accelerating, the speed controller only has to compensate disturbance variables in its control loop. This is achieved with a relatively minor controlled variable change at the controller output. Speed setpoint changes, on the other hand, are

carried out without involving the speed controller and are, therefore, performed more quickly.

The effect of the pre-control variable can be adapted according to the application using the weighting factor p1496. For p1496 = 100 %, precontrol is calculated according to the motor and load moment of inertia (p0341, p0342). A balancing filter is used automatically to prevent the speed controller acting against the injected torque setpoint. The time constant of the balancing filter corresponds to the equivalent delay time of the speed control loop. Speed controller pre-control is correctly set (p1496 = 100%, calibration using p0342) if the I component of the speed controller (r1482) does not change while ramping-up or ramping-down in the range n > 20 % x p0310. Thus, pre-control allows a new speed setpoint to be approached without overshoot (prerequisite: torque limiting does switch in and the moment of inertia remains constant).

If the speed controller is pre-controlled by means of injection, the speed setpoint (r0062) is delayed with the same smoothing time (p1442 or p1452) as the actual value (r1445). This ensures that no target/actual difference (r0064) occurs at the controller input during acceleration, which would be attributable solely to the signal propagation time.

When speed pre-control is activated, the speed setpoint must be specified continuously or without a higher interference level (avoids sudden torque changes). An appropriate signal can be generated by smoothing the speed setpoint or activating ramp-function generator rounding p1130 – p1131.

The startup time r0345 ($T_{startup}$) is a measure for the total moment of inertia J of the machine and describes the time during which the unloaded drive can be accelerated with the rated motor torque r0333 ($M_{mot,rated}$) from standstill to the rated motor speed p0311 ($n_{mot,rated}$).

r0345 = $T_{startup}$ = J x (2 x π x $n_{mot,rated}$) / (60 x $M_{mot,rated}$) = p0341 x p0342 x (2 x π x p0311) / (60 x r0333)

If these supplementary conditions are in line with the application, the starting time can be used as the lowest value for the ramp-up or ramp-down time.

Note

Setting the ramp-function generator

The ramp-up and ramp-down times (p1120; p1121) of the ramp-function generator in the setpoint channel should be set accordingly so that the motor speed can track the setpoint during acceleration and braking. This will optimize the function of speed controller pre-control.

The acceleration precontrol using a connector input (p1495) is activated by the parameter settings p1400.2 = 1 and p1400.3 = 0. p1428 (dead time) and p1429 (time constant) can be set for balancing purposes.

Function diagram

FP 6031 Precontrol balancing reference/acceleration model

Parameter

- p0311 Rated motor speed
- r0333 Rated motor torque
- p0341 Motor moment of inertia
- p0342 Ratio between the total and motor moment of inertia
- r0345 Rated motor startup time
- p1400.2 Acceleration pre-control source
- p1428 Speed pre-control balancing dead time
- p1429 Speed pre-control balancing time constant
- p1496 Acceleration pre-control scaling
- r1518 Acceleration torque

7.4.4.3 Reference model

Description

The reference model is activated with p1400.3 = 1.

The reference model is used to emulate the speed control loop with a P speed controller.

The loop emulation can be set in p1433 to p1435. It becomes effective if p1437 is connected to the output of the model r1436.

The reference model delays the setpoint-actual value deviation for the integral component of the speed controller so that settling (stabilizing) operations can be suppressed.

The reference model can also be externally emulated and the external signal entered via p1437.

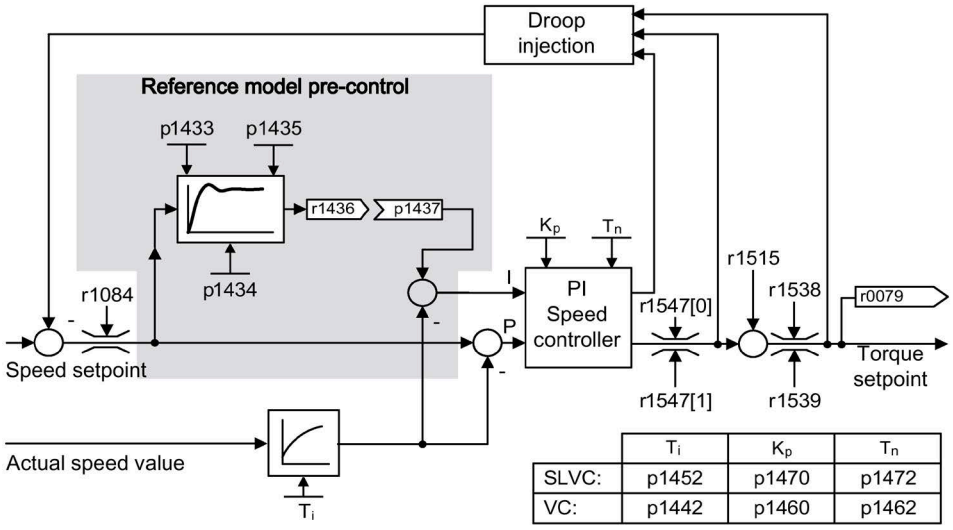

	Ti	Kp	Tn
SLVC:	p1452	p1470	p1472
VC:	p1442	p1460	p1462

Figure 7-16 Reference model

Function diagram

FP 6031 Precontrol balancing reference/acceleration model

Parameter

- p1400.3 Reference model speed setpoint I component
- p1433 Speed controller reference model natural frequency
- p1434 Speed controller reference model damping
- p1435 Speed controller reference model dead time
- r1436 Speed controller reference model speed setpoint output
- p1437 Speed controller reference model I component input

7.4.4.4 Speed controller adaptation

Description

With the speed controller adaptation, any speed controller oscillation can be suppressed.

The speed-dependent Kp_n/Tn_n adaptation is activated as default setting. The required values are automatically calculated when commissioning and for the rotating measurement. If, in spite of the automatic calculation, speed oscillations occur, then the Kp_n component can also be tuned (optimized) using the free Kp_n adaptation. The free Kp_n adaptation is activated by connecting a signal source at p1455. The factor calculated from this is multiplied by the Kp_n value of the speed-dependent adaptation. The range of action of the free Kp_n adaptation is set using parameters p1456 to p1459

In addition, using p1400.6 = 1, the Tn_n component of the speed-dependent adaptation can be tuned. The Tn_n value of the speed-dependent adaptation is divided by the factor of the free adaptation.

The Kp_n/Tn_n adaptation can be deactivated with p1400.5 = 0. As a consequence, the dynamic reduction of the speed controller is deactivated.

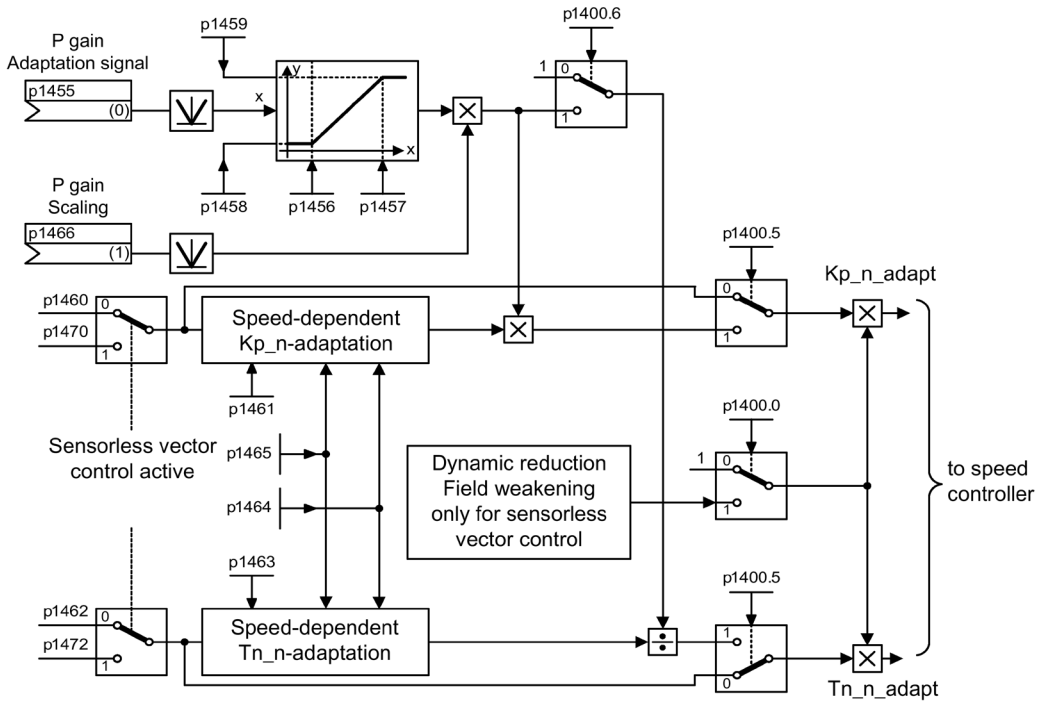

Figure 7-17 Kp_n/Tn_n adaptation

Example of speed-dependent adaptation

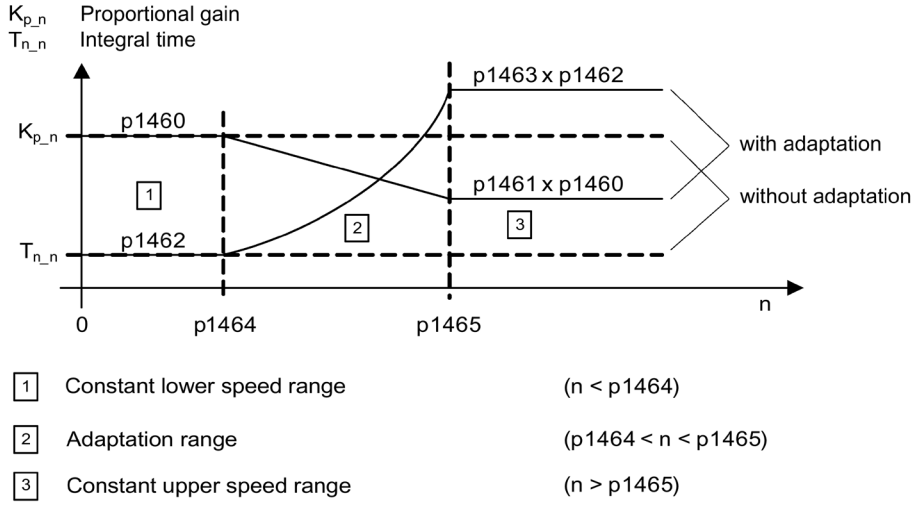

Figure 7-18 Example of speed-dependent adaptation

For operation without encoder, a higher value is in p1464 than in p1465. As a consequence, the behavior is inverted: Kp increases with increasing speed and Tn decreases.

Special case, encoderless operation in the field-weakening range

In encoderless operation, dynamic reduction for the field-weakening range can be activated with p1400.0 = 1.

Kp/Tn ~ flux setpoint

Kp/Tn decreases proportionally with the flux setpoint (minimum: factor 0.25).

This dynamic reduction is activated to reduce the controller dynamic response in the field-weakening range. Up to the field-weakening range, the higher controller dynamic of the speed controller is kept.

Function diagram

FP 6050 Speed controller adaptation (Kp_n/Tn_n adaptation)

Parameters

- p1400.5 Speed control configuration: Kp/Tn adaptation active
- p1400.6 Speed control configuration: Free Tn adaptation active
- p1470 Speed controller encoderless operation P gain
- p1472 Speed controller encoderless operation integral time

Free Kp_n adaptation

- p1455 Speed controller P gain adaptation signal
- p1456 Speed controller P gain adaptation lower starting point
- p1457 Speed controller P gain adaptation upper starting point
- p1458 Adaptation factor lower
- p1459 Adaptation factor upper
- p1466 CI: Speed controller P gain scaling

Speed-dependent Kp_n/Tn_n adaptation (VC only)

- p1460 Speed controller P gain adaptation speed lower
- p1461 Speed controller Kp adaptation speed, upper scaling
- p1462 Speed controller integral time adaptation speed lower
- p1463 Speed controller Tn adaptation speed, upper scaling
- p1464 Speed controller adaptation speed lower
- p1465 Speed controller adaptation speed upper

Dynamic response reduction field weakening (encoderless VC only)

- p1400.0 Speed control configuration: Automatic Kp/Tn adaptation active

7.4.4.5 Droop Function

Description

Droop (enabled via p1492) ensures that the speed setpoint is reduced proportionally as the load torque increases.

The droop function has a torque limiting effect on a drive that is coupled to a different speed (e.g. guide roller on a material web). In connection with the torque setpoint of a leading speed-controlled drive, a very effective load distribution can also be implemented. With the appropriate setting (in contrast to torque control or load distribution with overcontrol and limitation), this load distribution can even handle a smooth mechanical coupling or if slip should occur.

This method is only suitable to a limited extent for drives that are accelerated and braked with significant changes in speed.

The droop feedback is used, for example, in applications in which two or more motors are operated with a common shaft and fulfill the above requirements. It limits the torque differences that can occur as a result of the coupling by appropriately modifying the speeds of the individual motors. The load on the drive is reduced when the torque is excessively high.

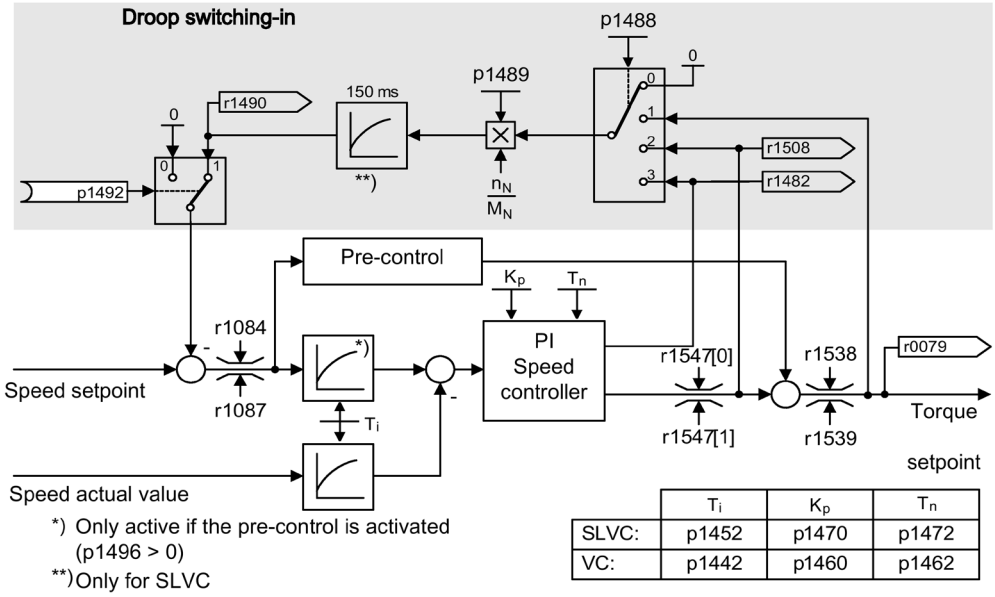

	Ti	Kp	Tn
SLVC:	p1452	p1470	p1472
VC:	p1442	p1460	p1462

Figure 7-19 Speed controller with droop

Precondition

- All connected drives must be operated with vector and speed control (with or without speed actual value encoder).
- The setpoints at the ramp function generators of the mechanically connected drives must be identical; the ramp function generators must have identical ramp-up and ramp-down times.

Function diagram

FP 6030 Speed setpoint, droop

Parameters

- r0079 Total speed setpoint
- r1482 Speed controller I torque output
- p1488 Droop input source
- p1489 Droop feedback scaling
- r1490 Droop feedback speed reduction
- p1492 Droop feedback enable
- r1508 Torque setpoint before supplementary torque

7.4.4.6 Open actual speed value

Description

Via parameter p1440 (CI: speed controller, speed actual value) is the signal source for the speed actual value of the speed controller. The unsmoothed actual speed value r0063[0] has been preset as the signal source in the factory.

Depending on the machine, parameter p1440 can be used, for example, to switch on a filter in the actual value channel or feed in an external actual speed value.

Parameter r1443 displays the actual speed value available at p1440.

Note

Feed in an external actual speed value

When infeeding an external actual speed value, care should be taken that the monitoring functions continue to be derived from the motor model.

Response for speed control with an encoder (p1300 = 21)

A motor encoder must always be available for the speed or position signal of the motor model (e.g. evaluation via SMC, see p0400). The actual speed of the motor (r0061) and the position information for synchronous motors still come from this motor encoder and are not influenced by the setting in p1440.

Interconnection of p1440:
When interconnecting connector input p1440 with an external actual speed value, ensure the speed scaling is the same (p2000).

The external speed signal should correspond to the average speed of the motor encoder (r0061).

Response for speed control without an encoder (p1300 = 20)

Depending on the transmission path of the external speed signal, dead times will accumulate; these dead times must be taken into account in the speed controller's parameter assignment (p1470, p1472) and can lead to commensurate losses in dynamic performance.
Signal transmission times must therefore be minimized.

P1750.2 = 1 should be set so that the speed controller is also able to operate at standstill (closed-loop controlled operation to zero frequency for passive loads). Otherwise, at low speeds it switches over to speed-controlled operation, so that the speed controller is switched off and the measured actual speed no longer has an influence.

Monitoring of the speed deviation between motor model and external speed

The external actual speed (r1443) is compared with the actual speed of the motor model (r2169). If the deviation is greater than the tolerance threshold set in p3236, after the switch-off delay time set in p3238 expires, fault F07937 (Drive: Speed deviation motor model to external speed) is generated and the drive switched-off corresponding to the set response (factory setting: OFF2).

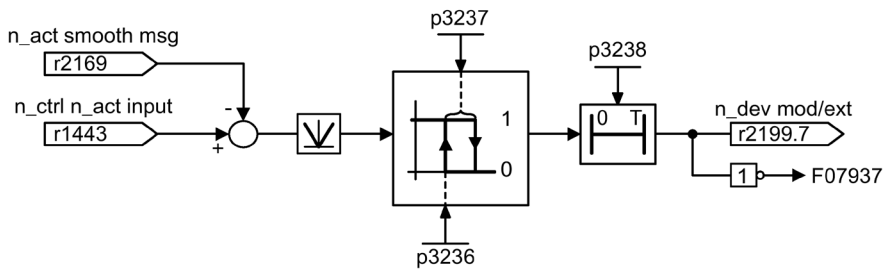

Figure 7-20 Monitoring "Speed deviation model / external in tolerance"

Function diagram

FP 6040	Vector control – speed controller with/without encoder
FP 8012	Signals and monitoring function – Torque messages, motor blocked/stalled

Parameter

- r0063[0] Actual speed value unsmoothed
- p1440 CI: Speed controller actual speed value input
- p1442 Speed controller actual speed value smoothing time
- r1443 CO: Speed controller actual speed value at actual value input
- p1452 Speed controller actual speed value smoothing time (without encoder)
- r2169 CO: Actual speed value smoothed messages
- r2199.7 Speed deviation model / external in tolerance
- p3236 Speed threshold 7
- p3237 Hysteresis speed 7
- p3238 Switch-off delay n_act_motor model = n_act_external

7.4.5 Closed-loop torque control

Description

For speed control without encoder (p1300 = 20) or speed control with encoder (p1300 = 21), a changeover can be made to torque control (following drive) using BICO parameter p1501. A changeover cannot be made between speed and torque control if torque control is selected directly with p1300 = 22 or 23. The torque setpoint and/or supplementary setpoint can be entered using BICO parameter p1503 (CI: torque setpoint) or p1511 (CI: supplementary torque setpoint). The supplementary torque is active both for torque and speed control. This particular feature with the supplementary torque setpoint allows a precontrol torque to be applied for speed control.

Note

No interconnection to fixed torque setpoints

For safety reasons, connecting to fixed torque setpoints is presently not possible.

Note

Regenerative energy without feedback capability

If energy is regenerated and cannot be injected back into the line supply, then a Braking Module with connected braking resistor must be used.

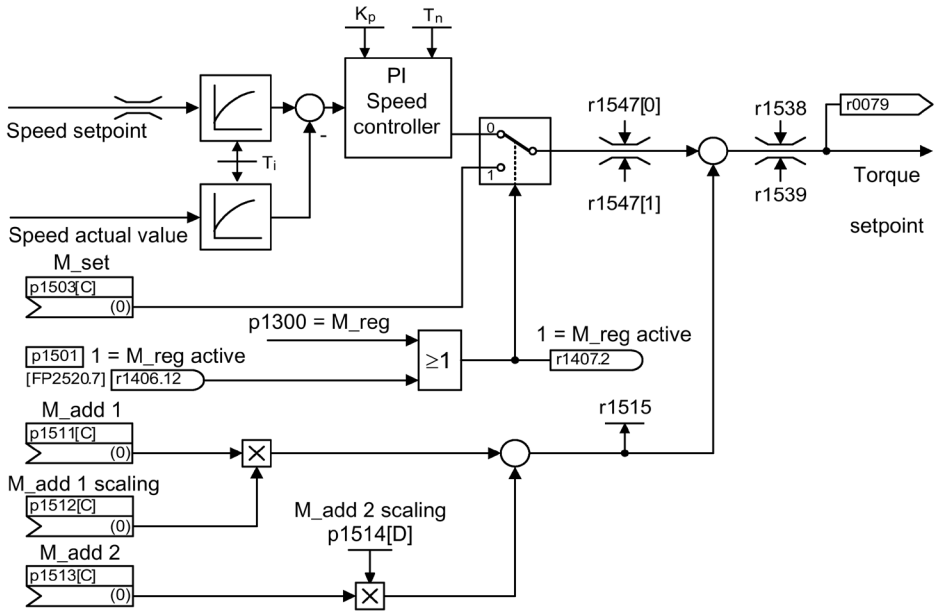

Figure 7-21 Closed-loop speed/torque control

The total of the two torque setpoints is limited in the same way as the speed control torque setpoint. Above the maximum speed (p1082), a speed limiting controller reduces the torque limits in order to prevent the drive from accelerating any further.

A "real" closed-loop torque control (with a speed that automatically sets itself) is only possible in the closed-loop control range but not in the open-loop control range of the sensorless closed-loop vector control.

In the open-loop controlled range, the torque setpoint changes the setpoint speed via a ramp-up integrator (integrating time ~ p1499 x p0341 x p0342). For this reason, encoderless torque control at standstill is only suitable for applications that require an accelerating torque but no load torque (e.g. traction drives). Closed-loop torque control with encoder does not have this restriction.

OFF responses

- OFF1 and p1300 = 22, 23
  - Response as for OFF2
- OFF1, p1501 = "1" signal and p1300 ≠ 22, 23
  - No separate braking response; the braking response is provided by a drive that specifies the torque.
  - The pulses are inhibited when the brake application time (p1217) expires. Standstill is detected when the speed actual value of the speed threshold (p1226) is undershot or when the monitoring time (p1227) started when speed setpoint ≤ speed threshold (p1226) expires.
  - Switching on inhibited is activated.

- OFF2
  - Immediate pulse suppression, the drive coasts to standstill.
  - The motor brake (if parameterized) is closed immediately.
  - Switching on inhibited is activated.
- OFF3
  - Switch to speed-controlled operation
  - The drive is immediately braked along the OFF3 down ramp (p1135) when n_set = 0 is entered.
  - When standstill is detected, the motor brake (if parameterized) is closed.
  - The pulses are inhibited when the motor brake closing time (p1217) has elapsed. Standstill is detected when the speed actual value of the speed threshold (p1226) is undershot or when the monitoring time (p1227) started when speed setpoint ≤ speed threshold (p1226) expires.
  - Switching on inhibited is activated.

Function diagram

FP 6060 Torque setpoint

Parameter

- p0341 motor moment of inertia
- p0342 Ratio between the total and motor moment of inertia
- p1300 Open-loop/closed-loop control operating mode
- p1499 Accelerating for torque control, scaling
- p1501 Change over between speed/torque control
- p1503 Torque setpoint
- p1511 Supplementary torque 1
- p1512 Supplementary torque 1 scaling
- p1513 Supplementary torque 2
- p1514 Supplementary torque 2 scaling
- r1515 Supplementary torque total

7.4.6 Torque limiting

Description

The torque limiting value specifies the maximum permissible torque. Different limits can be parameterized for motoring and generating operation.

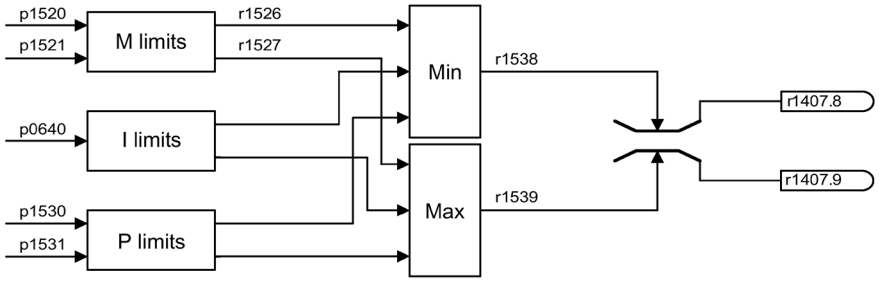

Figure 7-22 Torque limiting

- p0640 Current limit
- p1520 CO: Torque limit, upper/motoring
- p1521 CO: Torque limit, lower/regenerative
- p1522 CI: Torque limit, upper/motoring
- p1523 CI: Torque limit, lower/regenerative
- p1524 CO: Torque limit, upper/motoring, scaling
- p1525 CO: Torque limit, lower/regenerative scaling
- p1530 Power limit, motoring
- p1531 Power limit, regenerating

The currently active torque limit values are displayed in the following parameters:

- r0067 Output current maximum
- r1526 Torque limit, upper/motoring without offset
- r1527 Torque limit, lower/regenerative without offset

All of the following limits act on the torque setpoint – that is either available at the speed controller output for closed-loop speed control or as torque input, for closed-loop torque control. The minimum or the maximum is used for the various limits. This minimum or maximum is cyclically calculated and is displayed in the following parameters:

- r1538 Upper effective torque limit
- r1539 Lower effective torque limit

These cyclical values therefore limit the torque setpoint at the speed controller output/torque input or indicate the instantaneous max. possible torque. If the torque setpoint is limited, then this is displayed using the following parameters:

- r1407.8 Upper torque limit active
- r1407.9 Lower torque limit active

Function diagram

FP 6060	Torque setpoint
FP 6630	Upper/lower torque limit
FP 6640	Current/power/torque limits

7.4.7 Current setpoint filters

Description

The current setpoint filters are for suppressing cyclic disturbance variables that can be caused, for example, by mechanical vibrations in the drive train.

The current actual value filters can be set as follows:

- 2nd order lowpass (PT2: -40 dB/decade)
- General 2nd order filter

Bandstop and low-pass with reduction are converted into the parameters of the general 2nd order filter.

The current actual value filters are activated with p1656.0 = 1 or p1656.1 = 1. The properties of the current actual value filters are set in p1657 to p1666.

As long as changes to the data of the current setpoint filter are being made, the conversion of the new filter data can be prevented using p1699 = 1.
When p1699 = 0 is set, the calculation will be performed and the new values applied.

Function diagrams

FP 6710	Current setpoint filters

Parameter

- p1655[0] CI: Current setpoint filter 1 natural frequency tuning
- p1655[1] CI: Current setpoint filter 2 natural frequency tuning
- p1656.0 Current setpoint filter 1 activation
- p1657 Current setpoint filter 1 type
- p1658 Current setpoint filter 1 denominator natural frequency
- p1659 Current setpoint filter 1 denominator damping
- p1660 Current setpoint filter 1 numerator natural frequency
- p1661 Current setpoint filter 1 numerator damping
- p1656.1 Current setpoint filter 2 activation
- p1662 Current setpoint filter 2 type
- p1663 Current setpoint filter 2 denominator natural frequency
- p1664 Current setpoint filter 2 denominator damping
- p1665 Current setpoint filter 2 numerator natural frequency
- p1666 Current setpoint filter 2 numerator damping
- p1699 Filter data acceptance

7.4.8 Current controller adaptation

Current controller adaptation can be used to adapt the P gain of the current controller and the dynamic precontrol of the I_q current controller depending on the current.
The current controller adaptation is directly activated with setting p1402.2 = 1 or deactivated with p1402.2 = 0.
Using p1959.5, it is automatically activated (p1959.5 = 1) or deactivated (p1959.5 = 0).

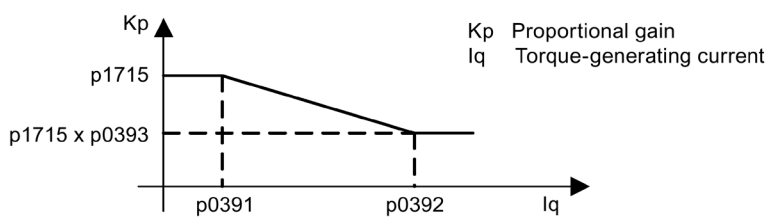

Figure 7-23 Current controller adaptation for p0393 < 1, with p0391 < p0392

When swapping the I_q interpolation points (e.g. for induction motors), the current controller adaptation appears as follows:

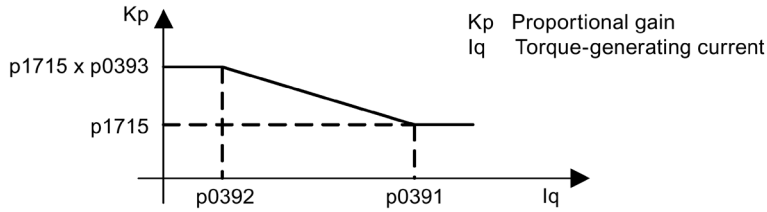

Figure 7-24 Current controller adaptation with swapped I_q interpolation points for p0393 > 1, with p0392 < p0391

Function diagrams

FP 6714 Vector control - Iq and Id controller

Parameters

- p0391 Current controller adaptation, starting point KP
- p0392 Current controller adaptation, starting point KP adapted
- p0393 Current controller adaptation P gain scaling
- p1402 Current control and motor model configuration
- p1703 Isq current controller precontrol scaling
- p1715 Current controller P gain
- p1717 Current controller integral time
- p1959 Rotating measurement configuration

7.4.9 Permanent-field synchronous motors

Description

Permanent-magnet synchronous motors that are equipped with a position encoder or a pulse encoder with zero mark are supported.

Permanent-magnet synchronous motors without encoders are also supported for operation without encoders.

Typical applications include direct drives with torque motors, which are characterized by high torque at low speeds, e.g. Siemens 1FW3 series torque motors. When these drives are deployed, gear units and mechanical parts subject to wear can be dispensed with if the application allows this.

WARNING

Electric shock when permanent magnet synchronous motors rotate

As soon as the motor rotates, a voltage is generated at the terminals, which when touched, can result in death or severe injury.

- Electrically disconnect the motor when working on the converter.
- If it is not possible to disconnect the connecting cables to the motor, secure the motor so that it cannot undesirably rotate, e.g. using a holding brake.

Features

- Field weakening of up to approx. 1.2 x rated speed (depending on the supply voltage of the converter and motor data, also see supplementary conditions)
- Flying restart (during operation without encoders, only when a VSM records the motor speed and phase angle (option K51))
- Speed and torque control vector
- U/f control for diagnostics vector
- Motor identification
- Automatic rotary transducer adjustment (calibration of the encoder's zero position, not for operation without encoders)
- Speed controller optimization (rotary measurement)

Supplementary conditions

- Maximum speed or maximum torque depend on the converter output voltage available and the back EMF of the motor (calculation specifications: EMF must not exceed $U_{rated, converter}$).
- Calculating the maximum speed:

$$n_{max} = n_n \cdot \sqrt{\frac{3}{2}} \cdot \frac{U_{DC\ link\ max} \cdot I_n}{P_n}$$

- Depending on the terminal voltage and load cycle, the maximum torque can be taken from the motor data sheets / configuration instructions.
- One of the following motor encoders must be deployed for operation with an encoder:
  - SMC10 (option K46): all resolvers that can be connected
  - SMC20 (option K48): SIN/COS encoders with C/D track, EnDat encoders
  - SMC30 (option K50): HTL/TTL encoders with zero mark.
- No thermal model is available for the closed-loop control of a permanent-magnet synchronous motor. The motor can only be protected against overheating by using temperature sensors (PTC, KTY, PT1000). To achieve a high level of torque accuracy, we recommend a temperature sensor (KTY, PT1000) to measure the motor temperature.

Commissioning

The following sequence is recommended for commissioning:

- Configure the drive

  When the drive is being commissioned using STARTER or the AOP30 operator panel, the permanent-magnet synchronous motor must be selected. The motor data specified in the table below must then be entered. Finally, the motor identification routine and speed optimization (p1900) are activated. Encoder adjustment is activated automatically together with the motor identification routine.

- Motor identification (standstill measurement, p1910)
- Encoder adjustment (p1990) (not for operation without encoder)
  Motor Modules with field-oriented closed-loop control specify the current on permanent-magnet synchronous motors with regard to the magnetic flux in the motor. To this end, the motor encoder must provide information about the position of the rotor.

  Note

  Encoder adjustment

  During initial commissioning and when the encoder is replaced, the encoder must be adjusted (p1990).

- Speed controller optimization (rotary measurement, p1960)

Motor data for permanent-magnet synchronous motors

Table 7- 2 Motor data type plate

Parameter	Description	Comment
p0304	Rated motor voltage	If this value is not known, the value "0" can also be entered. Entering the correct value, however, means that the stator leakage inductance (p0356, p0357) can be calculated more accurately.
p0305	Rated motor current	
p0307	Rated motor power	
p0310	Rated motor frequency	
p0311	Rated motor speed	
p0314	Motor pole pair number	If this value is not known, the value "0" can also be entered.
p0316	Motor torque constant	If this value is not known, the value "0" can also be entered.

If the torque constant k_T is not stamped on the type plate or specified in the data sheet, you can calculate this value from the rated motor data or from the stall current I_0 and stall torque M_0 as follows:

$$k_T = \frac{M_N}{I_N} = \frac{60\frac{s}{min} \times P_N}{2\pi \times n_N \times I_N}$$

or

$$k_T = \frac{M_0}{I_0}$$

The optional motor data can be entered if it is known. Otherwise, this data is estimated from the type plate data or determined by means of motor identification or speed controller optimization.

Table 7- 3 Optional motor data

Parameter	Description	Comment
p0320	Rated motor short-circuit current	For field weakening characteristic
p0322	Maximum motor speed	Maximum mechanical speed
p0323	Maximum motor current	De-magnetization protection
p0325	Rotor position identification current 1. Phase	-
p0327	Optional load angle	Optional otherwise leave at 90°
p0328	Reluctance torque constant	-
p0329	Rotor position identification current	-
p0341	Motor moment of inertia	For speed controller pre-control
p0344	Motor weight	-
p0350	Stator resistance, cold	-
p0356	Quadrature axis stator inductance Lq	-
p0357	In-line stator inductance Ld	-

Short-circuit protection

For short-circuits that can occur in the drive converter or in the motor cable, the rotating machine would supply the short-circuit until it comes to a standstill. An output contactor can be used for protection. This should be located as close as possible to the motor. This is particularly necessary if the motor can still be driven by the load when a fault develops. The contactor must be provided with a protective circuit against overvoltage on the motor side so that the motor winding is not damaged as a result of the shutdown.

Control signal r0863.1 (VECTOR) controls the contactor via a free digital output; the checkback contact of the contactor is connected to parameter p0864 via a free digital input.

This means that if the drive converter develops a fault with a shutdown response, at the instant in time that the pulses are inhibited, the motor is isolated from the drive converter so that energy is not fed back to the fault location.

Function diagram

FP 4715	Actual speed value and pole position sensing, motor encoder (encoder1), n_act_filter 5
FP 6721	Vector control - Id setpoint (PEM, p0300 = 2)
FP 6724	Vector control – field weakening controller (PEM, p0300 = 2)
FP 6731	Vector control - interface to Motor Module (PEM, p0300 = 2)

Output terminals

8

8.1 Content of this chapter

This chapter provides information on:

- Analog outputs
- Digital outputs

The analog/digital outputs described are located on the TM31 customer terminal block, which is available only with option G60.

As an alternative to the analog/digital outputs of the TM31, it is possible to use the terminals on the Control Unit or on the Terminal Board TB30 (option G62).

Some of the outputs on the Control Unit and on the TM31 are pre-assigned at the factory; the outputs on the TB30 are not pre-assigned at the factory.

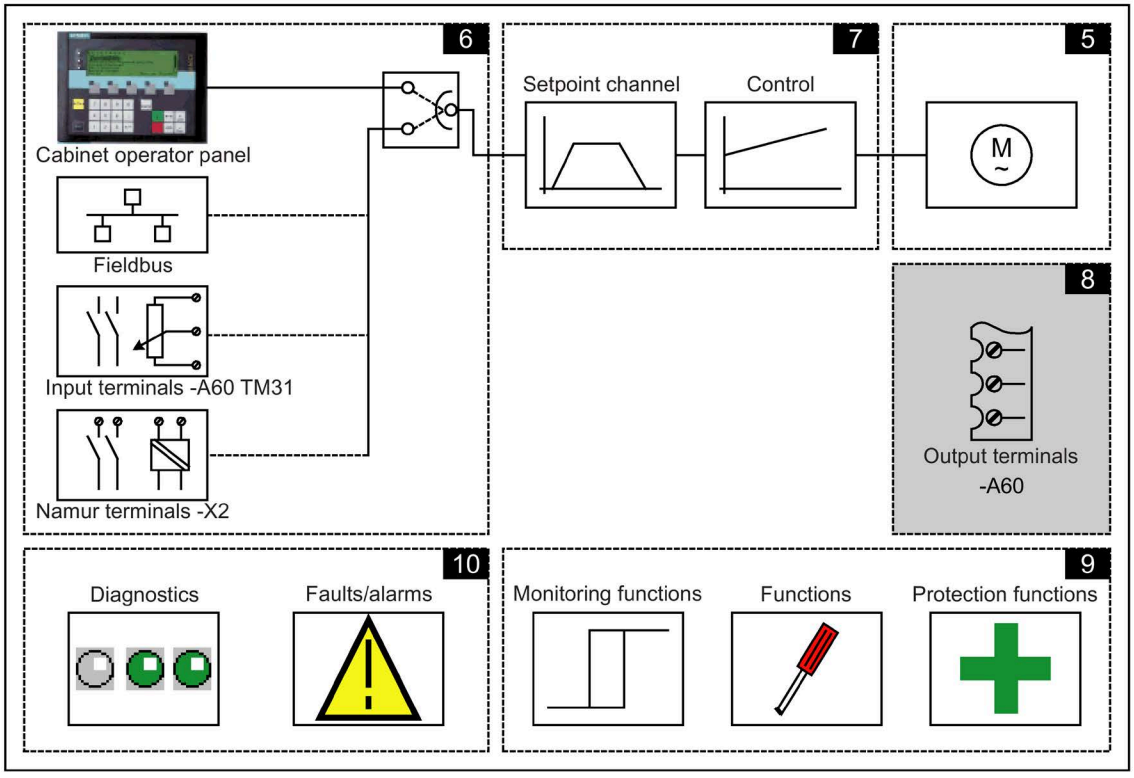

Function diagrams

At certain points in this chapter, reference is made to function diagrams. These are stored on the customer DVD in the "SINAMICS S120/S150 List Manual", which provides experienced users with detailed descriptions of all the functions.

8.2 Analog outputs

Description

When using option G60, the customer terminal strip has two analog outputs two output setpoints via current or voltage signals.

Delivery condition:

- AO0: Actual speed value 0 to 20 mA
- AO1: Actual motor current, 0 to 20 mA

Signal flow diagram

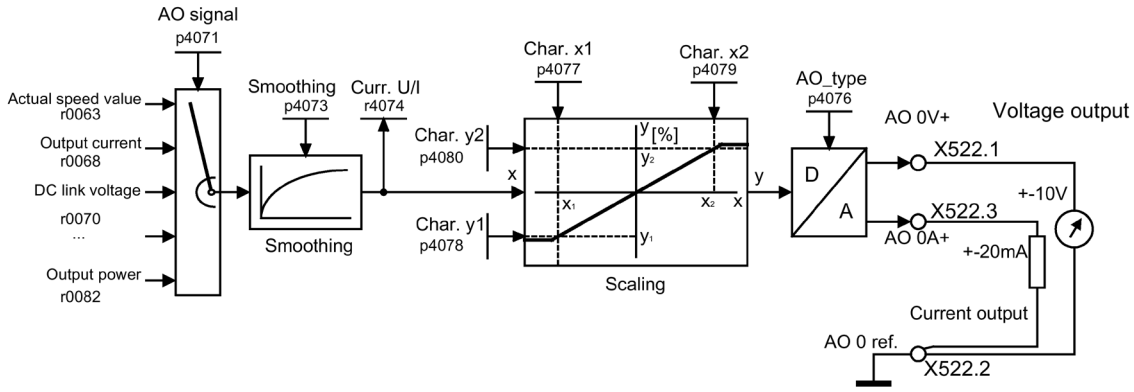

Figure 8-1 Signal flow diagram: analog output 0

Function diagram

FP 1840, FP 9572	TM31 - analog outputs (AO 0 to AO 1)

Parameter

- p4071 TM31 analog outputs, signal source
- p4073 TM31 analog outputs, smoothing time constant
- r4074 Analog outputs, actual output voltage/current
- p4076 TM31 analog outputs, type
- p4077 TM31 analog outputs, characteristic, value x1
- p4078 TM31 analog outputs, characteristic, value y1
- p4079 TM31 analog outputs, characteristic, value x2
- p4080 TM31 analog outputs, characteristic, value y2

8.2.1 Lists of signals for the analog outputs

Signals for the analog outputs: VECTOR object

Table 8- 1 List of signals for the analog outputs - VECTOR object

Signal	Parameter	Unit	Scaling (100 %=...) See table below
Speed setpoint before the setpoint filter	r0060	rpm	p2000
Motor speed unsmoothed	r0061	rpm	p2000
Actual speed smoothed	r0063	rpm	p2000
Output frequency	r0066	Hz	Reference frequency
Output current	r0068	Arms	p2002
DC link voltage	r0070	V	p2001
Torque setpoint	r0079	Nm	p2003
Output power	r0082	kW	r2004
For diagnostic purposes			
Control deviation	r0064	rpm	p2000
Modulation depth	r0074	%	Reference modulation depth
Torque-generating current setpoint	r0077	A	p2002
Torque-generating actual current	r0078	A	p2002
Flux setpoint	r0083	%	Reference flux
Actual flux	r0084	%	Reference flux
For further diagnostic purposes			
Speed controller output	r1480	Nm	p2003
I component of speed controller	r1482	Nm	p2003

VECTOR object scalings

Table 8- 2 VECTOR object scalings

Variable	Scaling parameter	Default for quick commissioning
Reference speed	100 % = p2000	p2000 = Maximum speed (p1082)
Reference voltage	100 % = p2001	p2001 = 1000 V
Reference current	100 % = p2002	p2002 = Current limit (p0640)
Reference torque	100 % = p2003	p2003 = 2 x rated motor torque
Reference power	100 % = r2004	r2004 = (p2003 x p2000 x π) / 30
Reference frequency	100 % = p2000/60	
Reference modulation depth	100 % = Maximum output voltage without overload	
Reference flux	100 % = Rated motor flux	
Reference temperature	100% = p2006	p2006 = 100°C

Signals for the analog outputs, object A_INF

Table 8- 3 List of signals for the analog outputs - object A_INF

Signal	Parameter	Unit	Scaling (100% =...) See table below
Output current	r0068	Arms	p2002
DC link voltage	r0070	V	p2001
Modulation depth	r0074	%	Reference modulation depth
Torque-generating current setpoint	r0077	A	p2002
Torque-generating actual current	r0078	A	p2002
Output power	r0082	kW	r2004

Normalization for object A_INF

Table 8- 4 Normalization for object A_INF

Variable	Scaling parameter	Default for quick commissioning
Reference frequency	100 % = p2000	p2000 = p0211
Reference voltage	100 % = p2001	p2001 = r0206/r0207
Reference current	100 % = p2002	p2002 = r0207
Reference power	100 % = r2004	r2004 = r0206
Reference modulation depth	100 % = Maximum output voltage without overload	
Reference temperature	100% = p2006	p2006 = 100°C

Changing analog output 0 from current to voltage output –10 V ... +10 V (example)

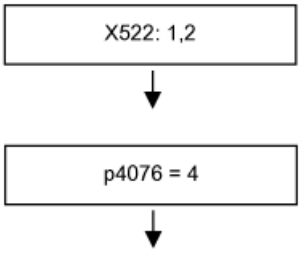

Voltage output present at terminal 1, ground is at terminal 2

Set analog output type 0 to -10 ... +10 V.

Changing the analog output 0 from current to voltage output –10 ... +10 V (example) and setting the characteristic

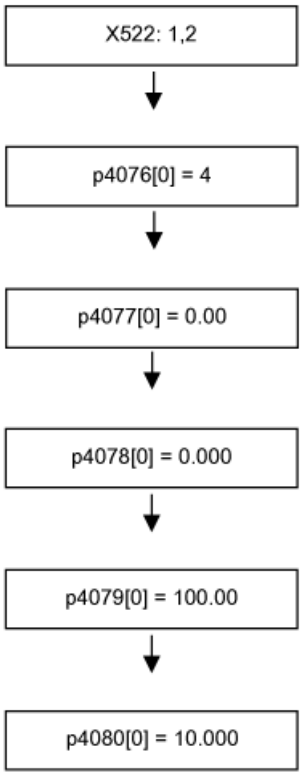

Voltage output present at terminal 1, ground is at terminal 2

Set TM31.AO_type [analog output 0] to -10 ... +10 V.

Set TM31.AO_char. x1 to 0.00%.

Set TM31.AO_char. y1 to 0.000 V.

Set TM31.AO_char. x2 to 100.00%.

Set TM31.AO_char. y2 to 10.000 V.

8.3 Digital outputs

Description

Four bi-directional digital outputs (terminal X541) and two relay outputs (terminal X542) are available. These outputs are, for the most part, freely parameterizable.

Signal flow diagram

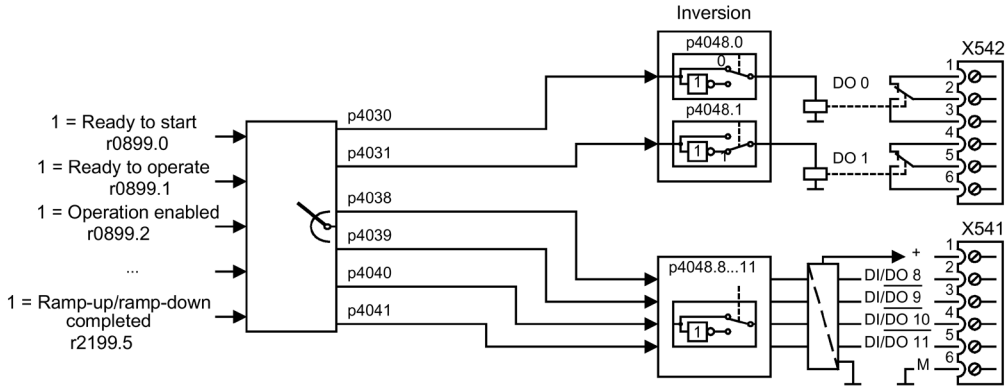

Figure 8-2 Signal flow diagram: Digital outputs

Delivery condition

Table 8- 5 Digital outputs, delivery condition

Digital output	Terminal	Delivery condition
DO0	X542: 2.3	"Enable pulses"
DO1	X542: 5.6	"No fault"
DI/DO8	X541: 2	"Ready to start"
DI/DO9	X541: 3	
DI/DO10	X541:4	
DI/DO11	X541: 5	

Selection of possible connections for the digital outputs

Table 8- 6 Selection of possible connections for the digital outputs

Signal	Bit in status word 1	Parameter
1 = Ready to start	0	r0899.0
1 = Ready	1	r0899.1
1 = Operation enabled	2	r0899.2
1 = Fault present	3	r2139.3
0 = Coast to stop active (OFF2 active)	4	r0899.4
0 = Fast stop active (OFF3 active)	5	r0899.5
1 = Closing lockout active	6	r0899.6
1 = Alarm present	7	r2139.7
1 = Speed setpoint/actual deviation within the tolerance band	8	r2197.7
1 = Master control requested	9	r0899.9
1 = f or n comparison value reached or exceeded	10	r2199.1
1 = I, M or P limit reached	11	r1407.7
1 = Open holding brake	12	r0899.12
0 = Alarm, motor overtemperature	13	r2135.14
1 = Motor rotates forward (n_act ≥ 0) 0 = Motor rotates backward (n_act < 0)	14	r2197.3
0 = Alarm thermal overload in power unit (A5000)	15	r2135.15
1 = Pulses enabled		r0899.11
1 = n_act ≤ p2155		r2197.1
1 = n_act > p2155		r2197.2
1 = Ramp-up/ramp-down completed		r2199.5
1 = |n_act| < p2161 (preferably as n_min or n=0 message)		r2199.0
1 = |M_set| < p2174		r2198.10
1 = LOCAL mode active (control via operator panel or control panel)		r0807.0
1 = Motor blocked		r2198.6

Functions, monitoring, and protective functions 9

9.1 Chapter content

This chapter provides information on:

- Active Infeed functions:
  line and DC link identification, harmonics controller, adjustable power factor (reactive current compensation)
- Drive functions:
  Motor identification, efficiency optimization, quick magnetization for induction motors, Vdc control, automatic restart, flying restart, motor changeover, friction characteristic, armature short-circuit braking, DC braking, increase in the output frequency, pulse frequency wobbling, runtime, simulation operation, direction reversal, unit changeover, derating behavior with increased pulse frequency, simple brake control, energy savings indicator for fluid-flow machines, write protection, know-how protection, emergency operation, web server.
- Extension functions:
  Technology controller, bypass function, extended brake control, extended monitoring functions, moment of inertia estimator, position control, basic positioner
- Monitoring and protective functions:
  Power unit protection, thermal monitoring functions and overload responses, blocking protection, stall protection, thermal motor protection.

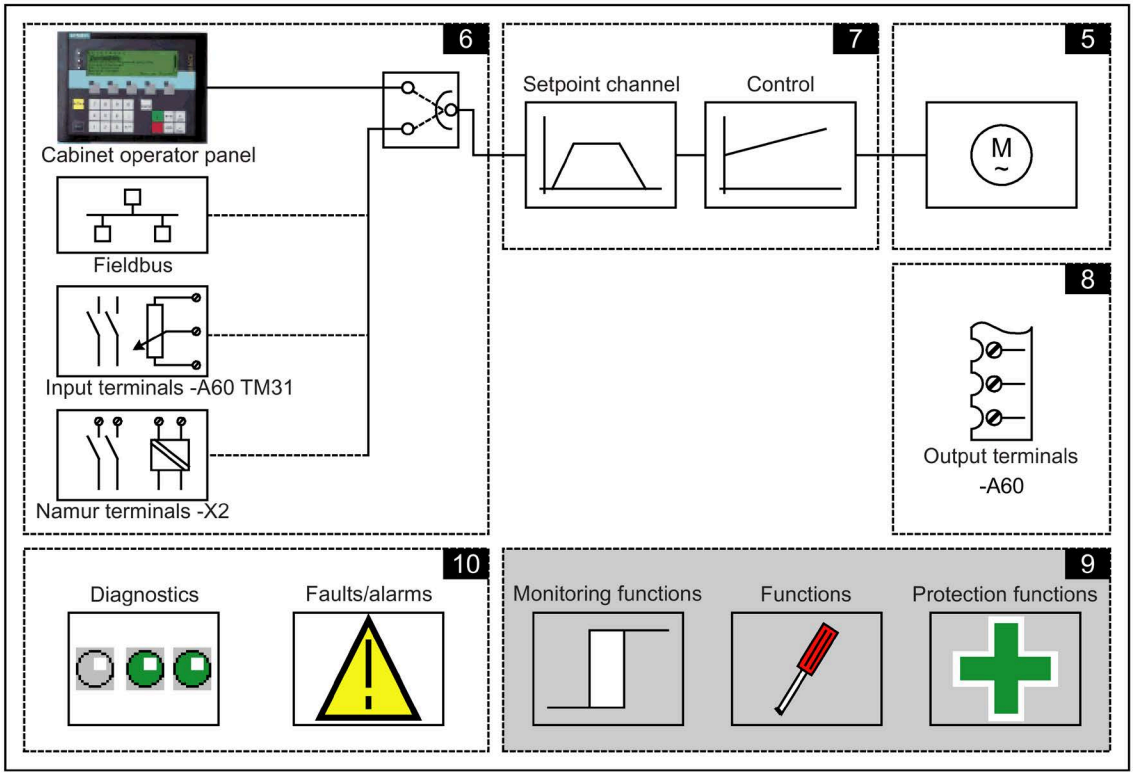

Function diagrams

At certain points in this chapter, reference is made to function diagrams. These are stored on the customer DVD in the "SINAMICS S120/S150 List Manual", which provides experienced users with detailed descriptions of all the functions.

9.2 Active Infeed functions

9.2.1 Line and DC link identification

Description

Automatic parameter identification determines all the line and DC-link parameters, thereby enabling the controller setting for the Line Module to be optimized.

Note

Repetition of the automatic identification

If the line environment or DC-link components are changed, automatic identification should be repeated with p3410 = 5 (e.g. once the system has been installed or the drive line-up extended).

The rated current flows during line identification, which can result in a supply-side voltage dip.

Identification methods

- 0: Identification (Id) off
- 1: Activate identification (Id)
- 2: Set controller setting
- 3: Identify and save controller setting
- 4: Identify and save controller setting with L adaptation
- 5: Reset, save controller setting with L adaptation

Note

Preferred identification method

You are advised to use this identification method.

For p3410 = 1, 3, 4, 5, alarm A06400 is output to indicate that the specified identification will take place after the next pulse enable.

After an identification run has been fully completed, p3410 = 0 is automatically set.

Parameters

- p3409 Infeed line frequency setting
- p3410 Infeed identification method
- r3411 Infeed identified inductance
- r3412 Infeed DC-link capacitance identified
- r3414 Infeed line inductance identified
- p3421 Infeed inductance
- p3422 Infeed DC-link capacitance
- p3424 Infeed line inductance
- p3620 Infeed current controller adaptation lower application threshold
- p3622 Infeed current controller adaptation reduction factor

9.2.2 Harmonics controller

Description

Harmonics in the supply voltage cause harmonics in the line currents. Current harmonics can be reduced by activating the harmonics controller.

Example of setting the harmonics controller

The 5th and 7th harmonics are to be compensated:

Table 9- 1 Sample parameters for the harmonics controller

Index	p3624 Infeed harmonics controller order	p3625 scaling
[0]	5	100%
[1]	7	100%

0% scaling means that the harmonics controller has been deactivated.

100 % scaling means that the harmonics controller has been activated with standard gain.

The phase currents in parameter p0069[0...2] (U, V, W) can be verified using the STARTER trace function.

Parameters

- r0069[0...8] Phase currents actual value
- p3624[0...1] Infeed harmonics controller order
- p3625[0...1] Infeed harmonics controller scaling
- r3626[0...1] Infeed harmonics controller output

9.2.3 Variable power factor (reactive power compensation)

Description

Changing the reactive current allows the power factor of the cabinet unit to be set as capacitive or inductive. The total setpoint is composed of the fixed setpoint p3610 and the dynamic setpoint via the connector input p3611.

The reactive current can be changed by specifying a parameterizable supplementary setpoint for the reactive current from a higher-level cosφ control.

Note

Direction of rotation

The direction of rotation of the network is compensated automatically with reactive current control. A negative reactive current setpoint causes an inductive reactive current; a positive setpoint generates a capacitive reactive current.

Note

Limitation of the reactive current setpoint

The closed-loop control limits the reactive current setpoint dynamically in such a way that the sum of the active current setpoint and the reactive current setpoint does not exceed the maximum device current.

Function diagram

FP 8946 Current precontrol / current controller / gating unit (p3400.0 = 0)

Parameters

- p3610 Infeed reactive current fixed setpoint
- p3611 CI: Infeed reactive current supplementary setpoint

9.2.4 Settings for the infeed (Active Infeed) under difficult line conditions

Description

The following setting examples are taken from commissioning procedures and are not generally valid! The required control characteristics must be checked again after the settings have been made.

Example 1: Infeed operates on a weak line supply

Infeed error during line identification, power failure (F6200, A6205)

Following procedure:

1. Exclude other sources of fault: e.g. actual power failure, wiring fault, correct supply data setting (p0210, p0211)
2. Reset the infeed parameters, re-enter the supply data
3. p0281 Line supply overvoltage, alarm threshold = 120 %
   p0283 Line supply undervoltage, shutdown (trip) threshold = 75 %
   p0284 Line supply frequency exceeded, alarm threshold = 120 %
   p0285 Line supply frequency fallen below, alarm threshold = 80 %
   → Start line supply ID (p3410 = 5)
4. If 3. was not successful, in addition:
   Reduce the excitation current p3415[0] = 5 %, p3415[1] = 5 %
   → Start line supply ID (p3410 = 5)
5. If 4. was not successful, then in addition:
   p3463 Infeed supply angle change phase failure detection = 30°
   p3560 Infeed VDC controller proportional gain = 50 %
   p3603 Infeed current precontrol factor D component = 0 to 50 %
   p3615 Infeed current controller P gain = 50 %
   (individual parameters only visible in service access level)
   → start line supply ID
6. If 5. was not successful, then in addition:
   Change the controller gain p3560 = 10 ... 300 % (Vdc controller)
7. For operation with generators:
   If no regenerative feedback is possible when generating: p3533 = 1 (inhibit generator operation)
   If required, the tolerance thresholds for frequency and voltage should be increased further: p0281 ... p0285

Note

Service parameters

The service parameters can only be accessed by authorized Siemens personnel.

If a particular setting is not possible or special application-specific supplementary conditions are present, individual steps can also be omitted.

Example 2: Faults during operation when loading the infeed, operating on a "normal" supply.

Power failure (F6200, A6205), DC link overvoltage (F30002)

Following procedure:

1. Exclude other sources of fault: e.g. actual power failure, wiring fault, correct supply data setting (p0210, p0211)
2. If 1. was not successful, then in addition:
   P3463 infeed unit supply angle change phase failure = 15 to 30°
   → perform the load test.
3. If 2. was not successful, then in addition:
   Change the controller gain p3560 = 10 to 300 %
   and if required the integral time p3562 = 50 % (Vdc controller)
   → perform a load test
4. If 3. was not successful, then in addition:
   Change voltage setpoint p3510, increase or decrease depending on fault profile and application
   → perform a load test
5. If 4. was not successful, then in addition:
   p3530 Infeed current limit, motoring = rated Active Infeed current (r0207).
   p3531 Infeed current limit, regenerating = rated Active Infeed current (r0207).
   → perform a load test

Note

Service parameters

The service parameters can only be accessed by authorized Siemens personnel.

If a particular setting is not possible or special application-specific supplementary conditions are present, individual steps can also be omitted.

9.3 Drive functions

9.3.1 Motor data identification and automatic speed controller optimization

Description

Two motor identification options, which are based on each other, are available:

- Motor identification with p1910 (standstill measurement)
- Rotating measurement with p1960 (speed controller optimization)

These can be selected more easily via p1900.

- p1900 = 2 selects the motor identification (motor not rotating).
- p1900 = 1 also activates the rotating measurement; setting p1910 = 1 and p1960 depending on the current control type (p1300).

Parameter p1960 is set depending on p1300 as follows:

- p1960 = 1, if p1300 = 20 or 22 (encoderless control)
- p1960 = 2, if p1300 = 21 or 23 (control with encoder)

The measurements parameterized using p1900 are started in the following sequence after the corresponding drive has been enabled:

1. Motor identification at standstill, after the measurement has been completed, the pulses are inhibited and parameter p1910 is reset to 0.
2. Encoder adjustment - after the measurement has been completed, the pulses are inhibited and parameter p1990 is reset to 0.
3. Rotating measurement - after the measurement has been successfully completed, the pulses are inhibited and parameter p1960 is reset to 0.
4. After all of the activated measurements have been successfully completed, reset parameter p1900 = 0.

The measurement progress can be monitored using r0047.

Completion of the individual motor data identification runs can be read via parameters r3925 to r3928.

Note

Non-volatile saving

To set the new controller setting permanently, the data must be saved with p0977 or p0971 in a non-volatile memory.

Note

The motor data identification runs only influence the currently valid motor data set (MDS).

WARNING

Unexpected motor movement during motor identification in the rotating mode

When selecting motor identification with optimization in the rotating mode, after commissioning, the drive initiates that the motor rotates with speeds that can reach the maximum motor speed.

- Observe the general safety instructions.
- Ensure that the EMERGENCY STOP functions are fully functional when commissioning the drive.

9.3.1.1 Motor data identification

Description

Motor identification with p1910 is used for determining the motor parameters at standstill (see also p1960: speed controller optimization):

- Equivalent circuit diagram data p1910 = 1
- Magnetization characteristic p1910 = 3

For control-related reasons, you are strongly advised to carry out motor identification because the equivalent circuit diagram data, motor cable resistance, IGBT on-state voltage and compensation for the IGBT lockout time can only be estimated if the data on the rating plate is used. For this reason, the stator resistance is a very important for the stability of sensorless vector control or for the voltage boost for the U/f characteristic.

Motor identification is essential if long supply cables or third-party motors are used. When motor data identification is started for the first time, the following data is determined with p1910 on the basis of the data on the rating plate:

Table 9- 2 Data determined using p1910

p1910	Induction motor	Permanent-magnet synchronous motor
p1910 = 1	• Rated magnetization current (p0320) • Stator resistance (p0350) • Rotor resistance (p0354) • Stator leakage inductance (p0356) • Rotor leakage inductance (p0358) • Magnetizing inductance (p0360) • Drive converter valve threshold voltage (p1825) • Converter valve interlocking times (p1828 ... p1830)	• Stator resistance (p0350) • Stator resistance q axis (p0356) • Stator inductance d axis (p0357) • Drive converter valve threshold voltage (p1825) • Converter valve interlocking times (p1828 ... p1830)
p1910 = 3	• Saturation characteristics (p0362 ... p0366)	not recommended Notice: When encoder adjustment is complete, the motor is automatically rotated approx. one revolution in order to determine the zero marker of the encoder.

Since the type plate data provides the initialization values for identification, you must ensure that it is entered correctly and consistently (taking into account the connection type (star/delta)) so that the above data can be determined.

It is recommended that the motor feeder cable resistance (p0352) is entered before the standstill measurement (p1910) is performed, so that it can be subtracted from the total measured resistance when the stator resistance is calculated (p0350).

Entering the cable resistance improves the accuracy of thermal resistance adaptation, particularly when long supply cables are used. This governs behavior at low speeds, particularly during encoderless vector control.

For p1909.20 = 1 (and p0352 = 0), the supply cable resistance is set from the difference of the measured value and the default value of the automatic parameterization or the value of the data set for list motors. The supply cable resistance then normally no needs to be entered.

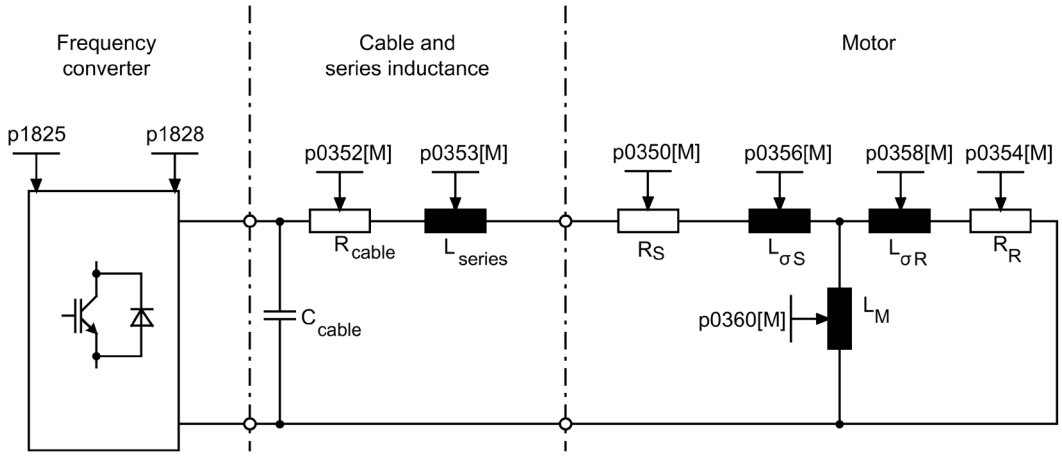

Figure 9-1 Equivalent circuit diagram for induction motor and cable

If an output filter (see p0230) or series inductance (p0353) is used, its data must also be entered before the standstill measurement is carried out.

The inductance value is then subtracted from the total measured value of the leakage. With sine-wave filters, only the stator resistance, valve threshold voltage, and valve interlocking time are measured.

Note

Large spread of the rated motor impedance

Leakage values in excess of 35 to 40 % of the rated motor impedance will restrict the dynamic response of speed and current control in the voltage limit range and in field-weakening operation.

Note

Perform standstill measurement with the motor in a cold state

Standstill measurement must be carried out when the motor is cold. In p0625, enter the estimated motor ambient temperature during the measurement (for PT1000 or KTY sensor: set p0600, p0601 and read r0035). This is the reference point for the thermal motor model and thermal R_S/R_R adaptation.

In addition to the equivalent circuit diagram data, motor data identification (p1910 = 3) can be used for induction motors to determine the rated magnetizing current and the magnetizing characteristic of the motor. Due to the higher accuracy, if possible these values should be determined as part of the rotating measurement (without encoder: p1960 = 1, 3; with encoder: p1960 = 2, 4). If the drive is operated in the field-weakening range, this characteristic should be determined for vector control in particular. The magnetization characteristic can be used to calculate the field-generating current in the field-weakening range more accurately, thereby increasing torque accuracy.

Note

Results of the rotating measurement

In comparison with standstill measurement (p1910) for induction motors, rotating measurement (p1960) allows the rated magnetization current and saturation characteristic to be determined more accurately.

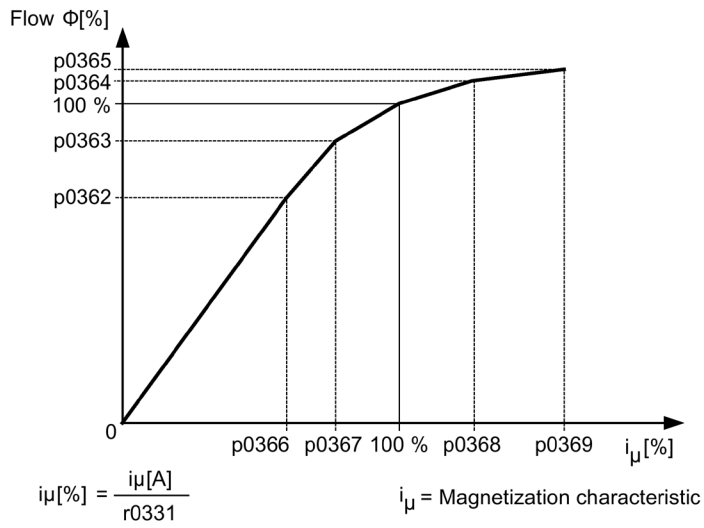

Figure 9-2 Magnetization characteristic

Carrying out motor identification

- Enter p1910 > 0. Alarm A07991 is displayed.
- Identification starts when the motor is switched on.
- p1910 resets itself to "0" (successful identification) or fault F07990 is output.
- r0047 displays the current status of the measurement.

Note

Non-volatile saving

To set the new controller setting permanently, the data must be saved with p0977 or p0971 in a non-volatile memory.

WARNING

Unexpected motor movement when identifying the motor

When the motor identification is selected, after commissioning the drive may cause the motor to move.

- Observe the general safety instructions.
- Ensure that the EMERGENCY STOP functions are fully functional when commissioning the drive.

Measurement without automatic adaptation of the control parameters (p1909.17)

p1909.17 = 1 can be used, for example, to measure the motor parameters after a motor replacement, without automatically adapting the control parameters via p0340.

9.3.1.2 Rotating measurement and speed controller optimization

Description

"Rotating measurement" can be activated using p1960 or using p1900 = 1.

The main difference between rotating measurement and standstill measurement is speed control optimization, with which the drive's moment of inertia is ascertained and speed controller is set. In addition, the saturation characteristic and rated magnetizing current of induction motors are measured and so make a significant contribution to improving the torque accuracy.

If rotating measurement is not to be carried out at the speed set in p1965, this parameter can be changed before the measurement is started. Higher speeds are recommended.

The same applies to the speed in p1961, at which the saturation characteristic is determined and the encoder test is carried out.

The speed controller is set to the symmetrical optimum in accordance with dynamic factor p1967. p1967 must be set before the optimization run and only affects the calculation of the controller parameters.

If, during the measurement, it becomes clear that the the drive cannot operate in a stable manner with the specified dynamic factor or that the torque ripples are too great, the dynamic response is reduced automatically and the result displayed in r1968. The drive must also be checked to ensure that it is stable across the entire range. The dynamic response might need to be reduced or the Kp_n/Tn_n adaptation for the speed controller parameterized accordingly.

Note

Dynamic response reduced too much

If the dynamic response of the speed controller is reduced excessively because of load oscillations, the oscillation test can also be deactivated (p1959.4 = 0).

When commissioning induction machines, you are advised to proceed as follows:

- Before connecting the load, a complete "rotating measurement" (without encoder: p1960 = 1; with encoder: p1960 = 2) should be carried out. Since the induction machine is idling, you can expect highly accurate results for the saturation characteristic and the rated magnetization current.
- When the load is connected, speed controller optimization should be repeated because the total moment of inertia has changed. This is realized by selecting parameter p1960 (without encoder: p1960 = 3; with encoder: p1960 = 4).
  The saturation characteristic recording is automatically deactivated in parameter p1959 during the speed tuning run.

When permanent-magnet synchronous motors are commissioned, the speed controller should be tuned (p1900 = 3 or p1960 > 0) when the load is connected.

Carrying out the rotating measurement (p1960 > 0)

The following measurements are carried out when the enable signals are set and a switch-on command is issued in accordance with the settings in p1959 and p1960.

- Encoder test
  If a speed encoder is used, the direction of rotation and the pulse number are checked.
- Only for induction motors:
  - Measurement of the magnetization characteristic (p0362 to p0369)
  - Measurement of the magnetization current (p0320) and determination of the offset voltage of the converter for offset compensation
  - Measurement of the saturation of the leakage inductance and setting of the current controller adaptation (p0391 to p0393)
    This is automatically activated with 1LA1 and 1LA8 motors (p0300 = 11, 18) (see p1959.5).
- Speed controller optimization
  - p1470 and p1472, when p1960 = 1 (operation without encoder)
  - p1460 and p1462, when p1960 = 2 (operation with encoder)
  - Setting the Kp adaptation
- Acceleration precontrol setting (p1496, p1517)
- Setting for ratio between the total moment of inertia and that of the motor (p0342)

Note

Non-volatile saving

To set the new controller setting permanently, the data must be saved with p0977 or p0971 in a non-volatile memory.

WARNING

Unexpected motor movement during motor identification in the rotating mode

When selecting motor identification with optimization in the rotating mode, after commissioning, the drive initiates that the motor rotates with speeds that can reach the maximum motor speed.

- Observe the general safety instructions.
- Ensure that the EMERGENCY STOP functions are fully functional when commissioning the drive.

Note

Speed controller optimization for operation with encoder

If speed controller optimization is carried out for operation with an encoder, the control mode will be temporarily changed over to encoderless speed control automatically, in order to be able to carry out the encoder test.

9.3.1.3 Shortened rotating measurement

A normal rotating measurement cannot always be performed when the load is connected. When switching the motor on for the first time, a short measurement of the moment of inertia and the measurement of the magnetizing current and the saturation characteristic can be performed with a simplified measuring procedure.
The following settings apply for the shortened rotating measurement:

- Measurement shortened (p1959.12 = 1)
- After measurement: Direct transfer to operation (p1959.13 = 1)

During the shortened rotating measurement, the drive is not ramped up to the rated speed, but to the value set in p1965 (factory setting, 40 %). Parameter p1961 can be adjusted at the plant, but it must be high enough to ensure that the machine has left open-loop controlled operation. The machine should be operated in no-load operation (torque < 30% of M_{rated}) as far as is possible.

During the shortened rotating measurement the saving of parameters is disabled, because parameter adjustments are automatically made for the measurement, which are to be reassigned after the measurement.

Measurement shortened (p1959.12 = 1)

If p1959.12 = 1 is set, a shortened rotating measurement is carried out. In this case, the magnetizing current and moment of inertia are determined with a somewhat lower degree of accuracy; the vibration test is no longer required.

After the end of the measurement, the drive is brought to a standstill and all the parameters modified for performing the measurement are set to their original values.
p1959.12 has no effect on p1960 = 3, 4.

After measurement: Direct transfer to operation (p1959.13 = 1)

If p1959.13 = 1 is set, the drive is not stopped after the end of the shortened measurement, but is instead moved to the desired setpoint speed with the set ramp up.

Since braking to standstill cannot be performed during this measurement and no pulses are locked, no more parameters can be changed that could later be written back during operation.

Do not change controller parameters during the measurement (p1959.11 = 1)

With the rotating measurement, the drive independently changes its speed controller parameters during start-up. This is also performed when bits 3 (recalculate speed controller parameters) and 4 (speed controller optimization/tuning) of parameter 1959 are not set. In many cases, however, the decoupling of drives is linked to high cost. The loads have high moments of inertia. The controller parameters set by the drive do not always match the drive application and may therefore potentially cause damage to the mechanical system.

If p1959.11 = 1 is set, the recalculation of the speed controller parameters is prevented.

9.3.1.4 Parameters

- r0047 Motor data identification and speed controller optimization
- p1300 Open-loop/closed-loop control operating mode
- p1900 Motor data identification and rotating measurement
- p1909 Motor data identification, control word
- p1910 Motor data identification selection
- p1959 Rotating measurement configuration
- p1960 Rotating measurement selection
- p1961 Saturation characteristic speed to determine
- p1965 Speed controller optimization speed
- p1967 Speed controller optimization dynamic factor
- r1968 Speed controller optimization actual dynamic factor
- r1973 Rotating measurement encoder test pulse number determined
- p1980 Pole position identification procedure
- r3925 Identification final display
- r3927 Motor data identification, control word
- r3928 Rotating measurement configuration

9.3.2 Efficiency optimization

9.3.2.1 Description

For induction motors, efficiency optimization has the following advantages:

- Lower energy costs
- Lower motor temperature rise
- Reduced motor noise levels

Disadvantages of efficiency optimization

- Longer acceleration times
- More significant speed dips for torque surges
- Lower dynamic response

However, the disadvantages are only relevant if the motor must respond with a high dynamic performance. Also when that the efficiency optimization is active, the converter motor control prevents the motor from stalling.

Optimization techniques

Speed and torque are specified by the driven machine. As a consequence, the flux is the remaining variable for optimizing the efficiency.

The efficiency of induction motors can be optimized using 2 different techniques. Both techniques optimize the efficiency using the flux.

It only makes sense to activate efficiency optimization if the dynamic response requirements are low (e.g. pump and fan applications).

9.3.2.2 Simple efficiency optimization (method 1)

For p1580 = 100 %, the flux in the motor under no-load operating conditions is reduced to half of the setpoint (reference) flux (p1570/2). As soon as a load is connected to the drive, the setpoint (reference) flux increases linearly with the load and reaches the setpoint set in p1570 at approx. r0077 = r0331 x p1570.

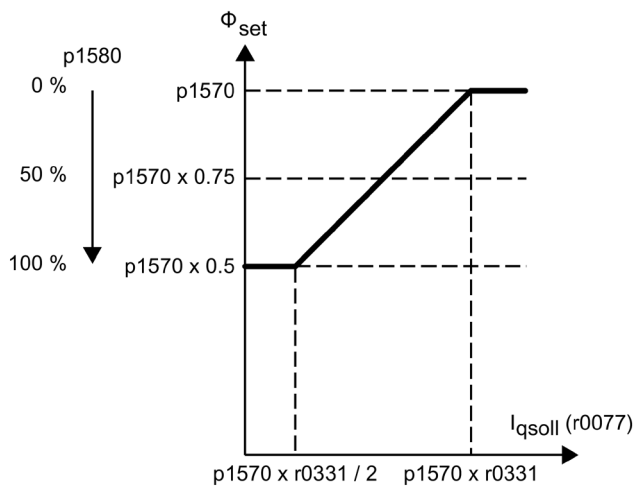

Figure 9-3 Efficiency optimization

In the field-weakening range, the final value is reduced by the actual degree of field weakening. The smoothing time (p1582) should be set to approx. 100 ms to 200 ms. Flux differentiation (see also p1401.1) is automatically deactivated internally following magnetization.

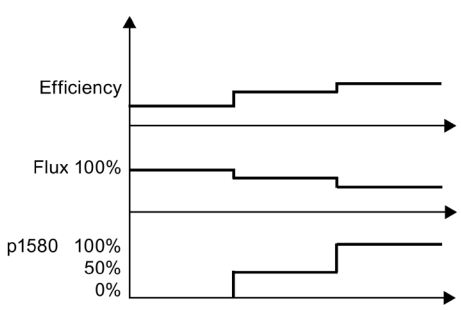

Figure 9-4 Basic efficiency optimization

9.3.2.3 Advanced efficiency optimization (method 2)

The advanced efficiency optimization generally achieves a better efficiency than the basic efficiency optimization. With this technique, the actual motor operating point is determined as a function of the efficiency and flux - and the flux is set to achieve the optimum efficiency. Depending on the motor operating point, the inverter either decreases or increases the flux in partial load operation of the motor.

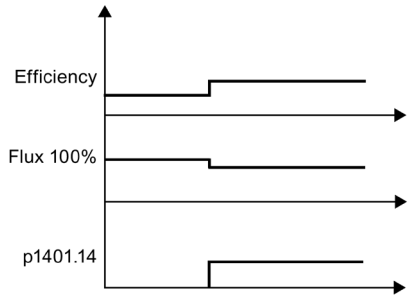

Advanced efficiency optimization with flux reduction

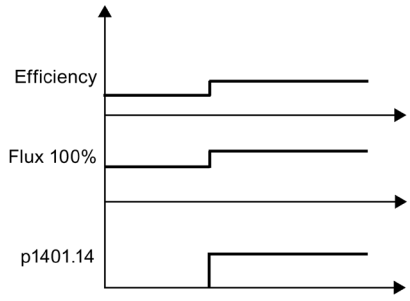

Advanced efficiency optimization with flux reduction

The advanced efficiency optimization is deactivated in the factory setting.

To activate advanced efficiency optimization, set p1401.14 = 1.

9.3.2.4 Function diagrams, parameters

Function diagram

FP 6722	Field weakening characteristic, Id setpoint (ASM, p0300 = 1)
FP 6723	Field weakening controller, flux controller for induction motor (p0300 = 1)

Parameter

- r0077 Current setpoints, torque-generating
- r0331 Motor magnetizing current/short-circuit current (actual)
- p1401 Flux control configuration
- p1570 Flux setpoint
- p1580 Efficiency optimization
- p1582 Flux setpoint smoothing time

9.3.3 Fast magnetization for induction motors

Description

Fast magnetization for induction motors reduces the delay time when magnetizing.

This shorter delay time is required for applications where a change is frequently made between various motors and one converter. After being switched to a different motor, a new data set must be loaded in the converter and then the motor magnetized. This can result in excessive waiting times, which can be significantly reduced by means of quick magnetization.

Features

- Rapid flux build-up by impressing a field-producing current at the current limit, which considerably reduces the magnetization time.
- If the "Flying restart" function is activated, the excitation build-up time set in p0346 is still used.

Commissioning

Parameter setting p1401.6 = 1 is necessary to activate fast magnetization.

This setting initiates the following sequence during motor starting:

- The maximum excitation build-up current of the induction motor (referred to the permitted rated power module current (r0207[0])) is set using parameter p0644 (Current limit excitation build-up induction motor).
- The field-generating current setpoint jumps to the value set in p0644 or the maximum of Imax = 0.9 x r0067 (high limit field-generating current setpoint).
- The flux increases as fast as physically possible with the specified current.
- The flux setpoint r0083 is made to follow accordingly.
- As soon as the flux threshold value programmed in p1573 is reached (min.: 10%, max. 200%, factory setting: 100%), excitation ceases and the speed setpoint is enabled. The flux threshold value must not be set too low for a large load as the torque-generating current is limited during the magnetizing time.

  Note

  Influence of the flux threshold value

  The flux threshold value set in parameter p1573 is effective only if the actual flux during magnetization reaches the value programmed in p1573 before the time set in p0346.

- The flux is increased further until the flux setpoint in (p1570) is reached.
- The field-producing current setpoint is reduced by means of a flux controller with P gain (p1590) and the parameterized smoothing factor (p1616).

Notes

When quick magnetization is selected (p1401.6 = 1), smooth starting is deactivated internally and alarm A07416 displayed.

When the stator resistance identification function is active (see p0621 "Identification of stator resistance after restart"), quick magnetization is deactivated internally and alarm A07416 displayed.

The parameter does not work when combined with the "flying restart" function (see p1200), i.e. flying restart is performed without quick magnetization.

Alarms and faults

Flux controller configuration

When a function controlled using parameters p1401 and p0621 is activated, the system checks whether any other incompatible function has already been selected. If this is the case, alarm A07416 is displayed with the number of the parameter that is incompatible with that of the configuration (i.e. p0621 or p1401).

As these are data-set-dependent parameters (p1401 is DDS-dependent and p0621 MDS-dependent), the number of the data set is also specified in the alarm value.

The configuration of the flow control (p1401) has inconsistencies.

Error causes and remedies

Cause	Remedy
1 = Quick magnetizing (p1401.6) for soft starting (p1401.0)	• Deactivate smooth starting: p1401.0 = 0 • Deactivate quick magnetization: p1401.6 = 0
2 = Quick magnetizing (p1401.6) for flux build-up control (p1401.2)	• Deactivate flux build-up control: p1401.2 = 0 • Deactivate quick magnetization: p1401.6 = 0
3 = Quick magnetization (p1401.6) for Rs identification (stator resistance identification) after restart (p0621 = 2)	• Change Rs identification parameter settings: p0621 = 0, 1 • Deactivate quick magnetization: p1401.6 = 0

Flux controller output limited

If the current limit (p0640) is set very low (below the rated magnetizing current value, p0320), it is possible that the parameterized flux setpoint (p1570) is never reached.

As soon as the time in p0346 (magnetization time) is exceeded, fault F07411 is output. Generally, the magnetization time is significantly longer than the flux build-up time associated with quick magnetization.

Error causes and remedies

When fast magnetization is configured (p1401.6 = 1), the specified flux setpoint is not reached even though the current setpoint = 90 % of maximum current.

Cause	Remedy
Motor data is incorrect.	Correct the motor data.
Motor data and motor connection type (star/delta) do not match.	Check the motor connection type.
Current limit in p0640 is set too low for the motor concerned.	Correct the current limits (p0640, p0323).
Induction motor (encoderless, open-loop controlled) at I2t limit.	Reduce the load on the induction motor.
Power unit rating is too low.	• Possibly use a higher rating power unit. • Check the motor feeder cable.

Function diagram

FP 6491 Flux control configuration
FP 6722 Field weakening characteristic, Id setpoint (ASM, p0300 = 1)
FP 6723 Field weakening controller, flux controller (ASM, p0300 = 1)

Parameter

- r0207 Rated power unit current
- p0320 Motor rated magnetization current / short-circuit current
- p0346 Motor excitation build-up time
- p0621 Stator resistance identification after restart
- p0640 Current limit
- p0644 Induction motor excitation current limit
- p1401 Flux control configuration
- p1570 Flux setpoint
- p1573 Flux threshold value magnetization
- p1590 Flux controller P gain
- p1616 Current setpoint smoothing time

9.3.4 Vdc control

Description

The "Vdc control" function can be activated using the appropriate measures if an overvoltage or undervoltage is present in the DC link.

- Overvoltage in the DC link (not relevant to S150).
- Undervoltage in the DC link
  - Typical cause:
    Failure of the supply voltage or infeed for the DC link.
  - Remedy:
    Specify a regenerative torque for the rotating drive to compensate the existing losses, thereby stabilizing the voltage in the DC link This process is known as kinetic buffering. Kinetic buffering is only possible as long as energy is generated by the movement of the drive.

Features

- Vdc control
  - This comprises Vdc_max control and Vdc_min control (kinetic buffering), which are independent of each other.
  - It includes a joint PI controller. The dynamic factor is used to set Vdc_min and Vdc_max control to a smoother or harder setting independently of each other.
- Vdc_min control (kinetic buffering)
  - With this function, the kinetic energy of the motor is used for buffering the DC link voltage in the event of a momentary power failure, thereby delaying the drive.
  - The motor is ramped up to its setpoint and continues to operate.
- Vdc_max control (not relevant to S150).

Description of Vdc_min control (kinetic buffering)

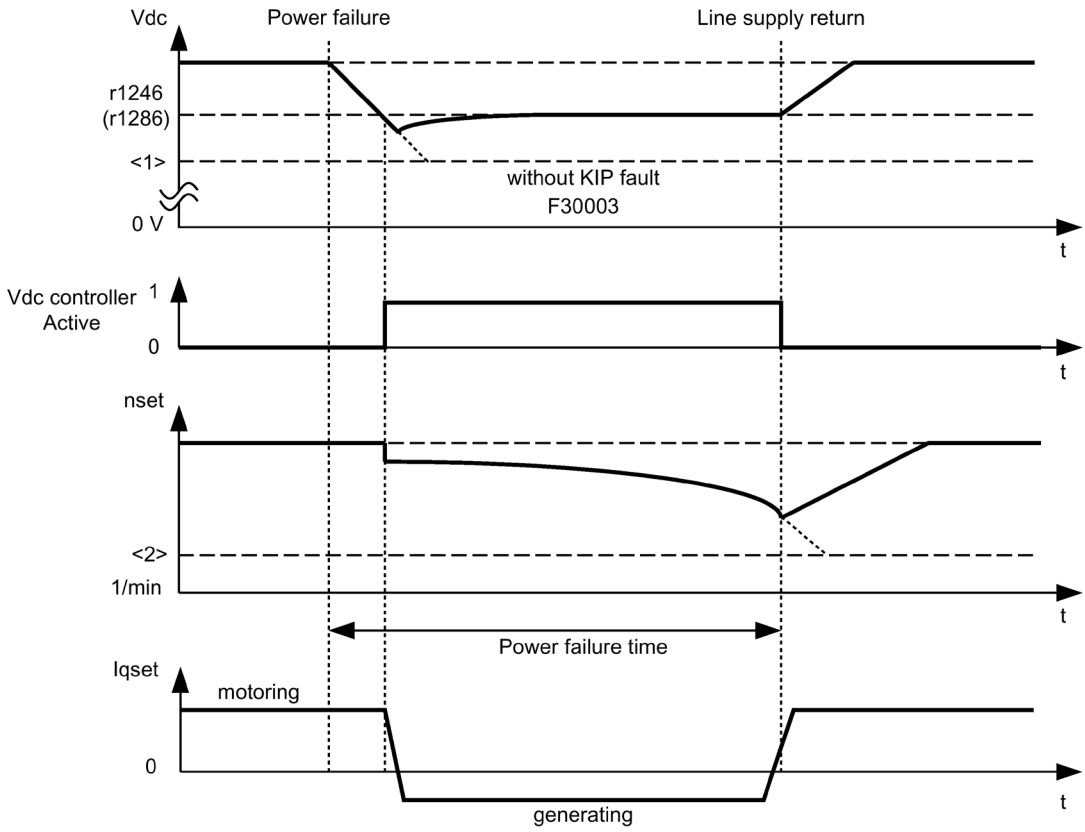

Figure 9-5 Switching Vdc_min control on/off (kinetic buffering)

Note

Activation of kinetic buffering

Kinetic buffering must only be activated in conjunction with an external power supply.

When Vdc_min control is enabled with p1240 = 2 (p1280), it is activated if the power fails when the Vdc_min switch-in level (r1246 (r1286)) is undershot. Seen generally, the regenerative energy (braking energy) of the motor when the speed is reduced is used to support the converter DC link voltage. This means that when Vdc_min control is active, the motor speed no longer follows the main setpoint and can be reduced to zero. The drive continues operating until the shutdown threshold of the DC link voltage is undershot (see "Switching Vdc_min control on/off" <1>).

Note

Parameter specifications in brackets

All parameter specifications in parentheses refer to U/f control.

Distinction between U/f control and speed control:

- U/f control
  The Vdc_min controller acts on the speed setpoint channel. When Vdc_min control is active, the drive setpoint speed is reduced so that the drive becomes regenerative.
- Speed control
  The Vdc_min controller acts on the speed controller output and affects the torque-generating current setpoint. When Vdc_min control is active, the torque-generating current setpoint is reduced so that the drive becomes regenerative.

If the power fails, the DC link voltage decreases due to the lack of power from the supply system. When the DC link voltage threshold set via parameter p1245 (p1285) is reached, the Vdc_min controller is activated. Due to the PID properties of the controller, the motor speed is reduced to the extent that the regenerative drive energy maintains the DC link voltage at the level set in p1245 (p1285). The kinetic energy of the drive governs the dropout characteristic of the motor speed and, in turn, the buffering duration. In centrifugal mass drives (e.g. fans), buffering can last a few seconds. In drives with a low centrifugal mass (e.g. pumps), however, buffering can last just 100 to 200 ms. When the power is restored, the Vdc_min controller is deactivated and the drive is ramped up to its setpoint speed at the ramp-function generator ramp. As long as the Vdc_min controller is active, an alarm A7402 (drive: DC link voltage minimum controller active) will be issued.

If the drive can no longer generate any regenerative energy (because, for example, it is almost at a standstill), the DC link voltage continues to drop. If the minimum DC link voltage is undershot (see "Switching Vdc_min control on/off" <1>), the drive will shut down with fault F30003 (power unit: DC link undervoltage).

If a speed threshold set with parameter p1257 (p1297) is undershot when Vdc_min control is active (see diagram "Switching Vdc_min control on/off" <2>), the drive is shut down with F7405 (drive: kinetic buffering minimum speed not reached).

If a shutdown with undervoltage in the DC link (F30003) occurs without the drive coming to a standstill despite the fact that Vdc_min control is active, the controller may have to be optimized via dynamic factor p1247 (p1287). Increasing the dynamic factor in p1247 (p1287) causes the controller to intervene more quickly. The default setting for this parameter, however, should be sufficient for most applications.

Parameter p1256 = 1 (p1296) can be used to activate time monitoring for kinetic buffering. The monitoring time can be set in parameter p1255 (p1295). If buffering (i.e. the power failure) lasts longer than the time set here, the drive is switched off with fault F7406 (drive: kinetic buffering maximum time exceeded). The standard fault reaction for this fault is OFF3, which means that this function can be used for controlled drive deceleration in the event of a power failure. In this case, excess regenerative energy can only be dissipated via an additional braking resistor.

Function diagram

FP 6220 (FP 6320)	Vdc_max controller and Vdc_min controller

Parameter

- p1240 (p1280) Vdc controller or Vdc monitoring configuration
- p1245 (p1285) Vdc_min controller switch-on level (kinetic buffering)
- r1246 (r1286) Vdc_min controller switch-on level (kinetic buffering)
- p1247 (p1287) Vdc_min controller dynamic factor (kinetic buffering)
- p1250 (p1290) Vdc controller proportional gain
- p1251 (p1291) Vdc controller integral action time
- p1252 (p1292) Vdc controller derivative-action time
- (p1293) Vdc_min controller output limit (V/f)
- p1255 (p1295) Vdc_min controller time threshold
- p1256 (p1296) Vdc_min controller response (kinetic buffering)
- p1257 (p1297) Vdc_min controller speed threshold
- r1258 (r1298) Vdc controller output

9.3.5 Automatic restart function

Description

The automatic restart function automatically restarts the converter after an undervoltage or a power failure. The alarms present are acknowledged and the drive is restarted automatically.

The drive can be restarted using:

- The standard procedure starting from standstill, or
- Starting the drive with the flying restart function.
  For drives with low moments of inertia and load torques that allow the drive to come to a standstill within a matter of seconds (e.g., pump drives operating against a pressure head), then starting from standstill is recommended.

Note

Drives with high moments of inertia

The flying restart function can also be activated for drives with large moments of inertia (such as fan drives). This enables you to switch to the motor that is still rotating.

WARNING

Unexpected movement of the motor during automatic restart

If p1210 is set to values >1, the motor can be restarted automatically without the need to issue the ON command.

In the event of prolonged power failures and when the automatic restart function is activated (p1210 > 1), the drive may have been at a standstill for a long time and mistakenly considered to have been switched off.

For this reason, entering the area around the drive when it is in this condition can cause death, severe injury or material damage.

- Observe the general safety instructions.
- Ensure that the EMERGENCY STOP functions are always fully functional.

Wait for the demagnetizing time

To prevent the motor from switching to phase opposition when the drive is being restarted, there is a delay while the motor demagnetizes (t = 2.3 x motor magnetization time constant). Once this time has elapsed, the inverter is enabled and the motor is supplied with power.

Automatic restart mode

Table 9- 3 Automatic restart mode

p1210	Mode	Meaning
0	Disables automatic restart	Automatic restart inactive
1	Acknowledges all faults without restarting	Any faults that are present, are acknowledged automatically once the cause has been rectified. If further faults occur after faults have been acknowledged, these will also be acknowledged automatically. A minimum time of p1212 + 1 s must expire between successful fault acknowledgement and a fault re-occurring if the signal ON/OFF1 (control word 1, bit 0) is at a HIGH signal level. If the ON/OFF1 signal is set to LOW, the time between a fault being acknowledged and another fault occurring must be at least 1 s. With p1210 = 1, no F07320 fault is generated if the acknowledgement attempt is unsuccessful, for example as the faults occur too frequently.
4	Automatic restart after power failure, without additional startup attempts	An automatic restart is only carried out, if fault F30003 has also occurred at the Motor Module, or there is a HIGH signal at binector input p1208[1], or in the case of an infeed drive object (A_Infeed), fault F06200 has occurred. If additional faults are pending, then these faults will also be acknowledged; if this is successful, the startup attempt will be resumed. The failure of the CU's 24 V power supply will be interpreted as a line supply failure. For the case that only the phase voltage fails, time monitoring can be set using p1213.
6	Restart after fault with additional startup attempts	An automatic restart is carried out after any fault or for p1208[0] = 1. If the faults occur one after the other, then the number of startup attempts is defined using p1211. Monitoring over time can be set using p1213.
14	Restart after power failure after manual acknowledgement	As with p1210 = 4. Pending faults must be manually acknowledged. This is followed by an automatic restart.
16	Restart after fault after manual acknowledgement	As with p1210 = 6. Pending faults must be manually acknowledged. This is followed by an automatic restart.

Startup attempts (p1211) and waiting time (p1212)

p1211 is used to specify the number of startup attempts. The number is decremented internally after each successful fault acknowledgement (line supply voltage must be restored or the infeed signals that it is ready). Fault F07320 is output when the number of parameterized startup attempts is reached.

If p1211 = x, x + 1 startup attempts will be made.

Note

Start of a startup attempt

A startup attempt starts immediately when the fault occurs.

The faults are acknowledged automatically at intervals of half the waiting time p1212.

Following successful acknowledgement and restoration of the voltage, the system is automatically powered up again.

The startup attempt has been successfully completed if the flying restart and the motor magnetization (induction motor) have been completed (r0056.4 = 1) and one additional second has expired. The startup counter is not reset to the initial value p1211 until this point.

If additional faults occur between successful acknowledgement and the end of the startup attempt, then the startup counter, when it is acknowledged, is also decremented.

Automatic restart monitoring time (p1213)

- p1213[0] = Monitoring time for restart

  The monitoring time starts when the faults are detected. If the automatic acknowledgements are not successful, the monitoring time will continue. If the drive has not successfully restarted by the time the monitoring time expires (flying restart and motor magnetization must have been completed: r0056.4 = 1), fault F07320 is output.

  The monitoring is deactivated with p1213 = 0. If p1213 is set to a value lower than the sum of p1212, the magnetization time r0346 and the additional delay time due to flying restart, then fault F07320 will be generated on every restart attempt. If, for p1210 = 1, the time in p1213 is set to a value lower than p1212, then fault F07320 will also be generated on every restart attempt.

  The monitoring time must be extended if the faults that occur cannot be immediately and successfully acknowledged (e.g. when faults are permanently present).

  For p1210 = 14, 16 manual acknowledgement of the pending fault must take place within the time in p1213[0]. Otherwise the fault F07320 is generated after the time set.

- p1213[1] = Monitoring time for resetting the starting counter

  The starting counter (see r1214) is only reset to starting value p1211 once the time in p1213[1] has expired after a successful restart. The delay time is not effective for error acknowledgment without an automatic restart (p1210 = 1). If the power supply fails (blackout), the wait time only starts once the power has been restored and the Control Unit is ramped up. The starting counter is reset to the starting value p1211, if F07320 occurred, the switch-on command is recalled and the fault acknowledged.

  If starting value p1211 or mode p1210 is changed, the starting counter is immediately updated.

Faults without automatic restart (p1206)

Up to 10 fault numbers for which the automatic restart should not be effective can be selected via p1206[0...9].

The parameter is only effective if p1210 = 6 and p1210 = 16.

Parameters

- p1206[0...9] Faults without automatic restart
- p1207 BI: Automatic restart (AR) - connection to the following drive object
- p1208[0...1] BI: Automatic restart modification, infeed
- p1210 Automatic restart mode
- p1211 Automatic restart, start attempts
- p1212 Automatic restart, delay time start attempts
- p1213[0...1] Automatic restart monitoring time
- r1214 Automatic restart status

9.3.6 Flying restart

Description

The "Flying restart" function (enabled via p1200) allows the converter to switch to a motor that is still rotating. Switching on the converter without the flying restart function would not allow any flux to build up in the motor while it is rotating. Since the motor cannot generate any torque without flux, this can cause it to switch off due to overcurrent (F07801).

The flying restart function first determines the speed of the drive with which V/f or vector control is initialized. so that the converter and motor frequency can be synchronized.

During the standard start-up procedure for the converter, the motor must be at a standstill. The converter then accelerates the motor to the setpoint speed. In many cases, however, the motor is not at a standstill.

Two different situations are possible here:

1. The drive rotates as a result of external influences, such as water (pump drives) or air (fan drives). In this case, the drive can also rotate against the direction of rotation.
2. The drive rotates as a result of a previous shutdown (e.g. OFF2 or a power failure). The drive slowly coasts to a standstill as a result of the kinetic energy stored in the drive train (example: induced-draft fan with a high moment of inertia and a steeply descending load characteristic in the lower speed range).

In accordance with the setting chosen (p1200), the flying restart function is activated in the following situations:

- Once power has been restored and the automatic restart function is active
- After a shutdown with the OFF2 command (pulse inhibit) when the automatic restart function is active
- When the ON command is issued.

Note

Applications for flying restart function

The flying restart function must be used when the motor may still be running or is being driven by the load to prevent shutdowns due to overcurrent (F7801).

Note

Information on flying restart function

If the value set for parameter p1203 (search speed factor) is higher, the search curve is flatter and, as a result, the search time is longer. A lower value has the opposite effect.

In motors with a low moment of inertia, the flying restart function can cause the drive to accelerate slightly.

In group drives, the flying restart function should not be activated due to the different coasting properties of the individual motors.

9.3.6.1 Flying restart without encoder

Description

Depending on parameter p1200, the flying restart function is started with the maximum search speed $n_{search,max}$ once the de-excitation time (p0347) has elapsed (see diagram "Flying restart").

$n_{Search,max} = 1.25 \times n_{max}$ (p1082)

The flying restart function behaves differently with V/f control and vector control:

- V/f characteristic (p1300 < 20):
  The search speed yielded from parameter p1203 reduces the search frequency in accordance with the motor current. The parameterizable search current (p1202) is injected here. If the search frequency is similar to the rotor frequency, a current minimum occurs. Once the frequency has been found, the motor is magnetized. The output voltage during the magnetization time (p0346) is increased to the voltage value yielded from the V/f characteristic (see "Flying restart").
- Vector control without encoder:
  The motor speed is determined using the speed adaptation control loop for the electric motor model. To begin with, the search current (p1202) is injected and then the controller is activated starting from the maximum search frequency. The dynamic response of the controller can be altered using the search speed factor (p1203). If the deviation of the speed adaptation controller is not too great, the motor continues to be magnetized for the duration parameterized in p0346.

Once the excitation build-up time (p0346) has elapsed, the ramp-function generator is set to the actual speed value and the motor ramped up to the current setpoint frequency.

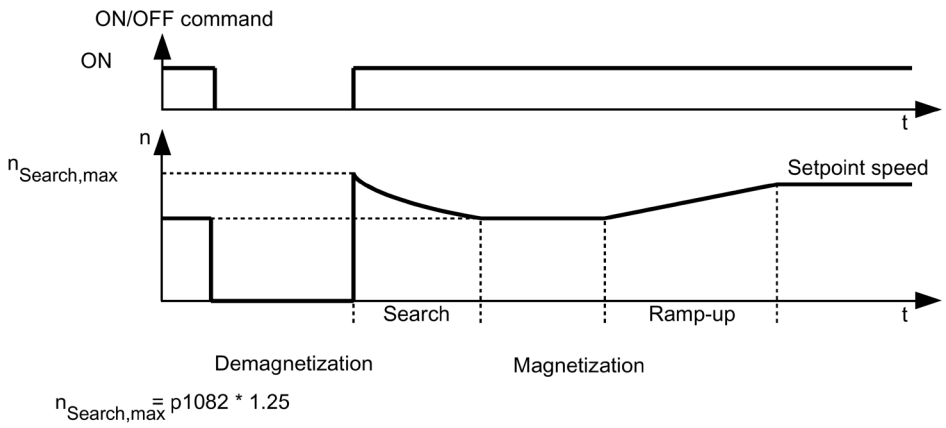

Figure 9-6 Flying restart

WARNING

Unexpected movement of the motor when flying restart is activated

When the flying restart (p1200) function is active, the drive may still be accelerated by the search current despite the fact that it is at standstill and the setpoint is 0!

For this reason, death, serious injury, or considerable material damage can occur if personnel enter the working area of a motor in this state.

- Observe the general safety instructions.
- Ensure that the EMERGENCY STOP functions are always fully functional.

Note

Flying restart without encoder for permanently-excited synchronous motors

The flying restart without encoder for permanently-excited synchronous motors is possible only when a VSM10 Voltage Sensing Module is used to acquire the motor speed (option K51).

Flying restart without encoder for long cables

In the case of long motor cables, the procedure described above can lead to problems during a flying restart. In such cases, the following settings can improve the flying restart function:

- Enter the cable resistance in parameter p0352 before motor data identification.
- Set parameter p1203 to at least 300%.
  With this setting, flying restart takes longer than for values below 300%.

Note

Optimize the flying restart function

To optimize the flying restart, a trace recording should check the function. If necessary, you can improve the result by making settings for parameters p1202 and p1203.

Fast flying restart (only for induction motors)

The "Fast flying restart" function can be activated during operation without encoder (vector control, V/f control linear and parabolic). For a fast flying restart, the initial frequency is set to zero.
In this procedure, the flying restart function is performed successfully within a period of approximately 200 ms.

The fast flying restart function works only under the following conditions:

- for a current controller cycle time of 250 µs or 400 µs (without motor-side filter and without long cables)
- Up to 4x rated speed for vector control
- Up to the rated speed for V/f control

Note

The "Fast flying restart" function is only possible with induction motors.

The settings for fast flying restart are configured in the expert list.

1. The "Fast flying restart" procedure is selected by setting p1780.11 = 1.

   For operation with encoder, the settings of this bit are ignored, because no fast flying restart is possible here.
2. Fast flying restart is activated using the p1200 parameter, as with the normal flying restart.
3. For the determination of the line resistance, a motor data identification must be carried out at standstill (p1900 = 2).

   The critical parameters are the motor stator resistance (p0350) and the motor stator leakage inductance (p0356).

The fast flying restart condition codes are the following:

- For U/f control: r1204.14 (fast flying start activated)
- For vector control: r1205.16 (fast flying restart activated) or r1205.17 (fast flying restart finished)

Note

Search current must not be too small

If you have any problems with the fast flying restart it can be useful to set the search current (p1202) to values > 30%. Problems can occur if the drive is operated far into the field weakening, or if it is operated with motor-side filters or long lines.

Fast flying restart with voltage acquisition via VSM10

The time for the connection to a rotating induction motor can be shortened when the terminal voltage of the motor is measured.

Settings for the fast flying restart with voltage acquisition:

1. Select the voltage measurement for the fast flying restart: p0247.5 = 1.
2. Activate the flying restart: p1200 > 0.

The following status bits indicate the characteristic of the flying restart:

1. For U/f control: r1204.15 (flying restart with VSM active)
2. For vector control: r1205.18, r1205.19, r1205.20

Note

Voltage amplitude must not be too small

If the measured voltage amplitude undershoots the 1% limit of the converter rated voltage, the flying restart with voltage measurement is deactivated and the motor speed sought.

9.3.6.2 Flying restart with encoder

Description

The flying restart function behaves differently with V/f control and vector control:

- U/f characteristic (p1300 < 20):
  Flying restart without an encoder (see Chapter "Flying restart without an encoder")
- Vector control with a speed encoder:
  Since the speed is known from the start, the motor can be magnetized immediately at the appropriate frequency. The duration of magnetization is specified in p0346. Once the excitation build-up time has elapsed, the ramp-function generator is set to the actual speed value and the motor ramped up to the current setpoint speed.

⚠ WARNING

Unexpected movement of the motor when flying restart is activated

When the flying restart (p1200) function is active, the drive may still be accelerated by the search current despite the fact that it is at standstill and the setpoint is 0!

For this reason, death, serious injury, or considerable material damage can occur if personnel enter the working area of a motor in this state.

- Observe the general safety instructions.
- Ensure that the EMERGENCY STOP functions are always fully functional.

9.3.6.3 Parameters

- p0247.5 Utilize the voltage measured values for flying restart
- p0352 Cable resistance
- p1200 Flying restart operating mode
  - 0: Flying restart inactive
  - 1: Flying restart always active (start in setpoint direction)
  - 2: Flying restart active after On, error, OFF2 (start in setpoint direction)
  - 3: Flying restart active after error, OFF2 (start in setpoint direction)
  - 4: Flying restart always active (start only in setpoint direction)
  - 5: Flying restart active after On, error, OFF2 (start only in setpoint direction)
  - 6: Flying restart active after error, OFF2 (start only in setpoint direction)
- p1202 Flying restart search current
- p1203 Flying restart search speed factor
- r1204 Flying restart, U/f control status
- r1205 Flying restart, vector control status
- p1780.11 Fast flying restart with voltage model for induction motors
- p1900 Motor data identification and rotating measurement
- p1909 Motor data identification control word

Note

Set search direction for the flying restart

For p1200 = 1, 2, 3, the following applies: Search in both directions, start only in the setpoint direction.

For p1200 = 4, 5, 6, the following applies: Search only in the setpoint direction.

9.3.7 Checking for a short-circuit/ground fault at a motor

When switching on the power unit, test pulses can be generated that check the connection between the power unit and motor - or the motor winding itself - for a short-circuit or ground fault.

Depending on the configuration in p1901, you can define as to whether only the short circuit test is executed - or additionally, also a ground fault test (with higher current pulses).

- p1901.0 = 1

  Checks for a line-line short-circuit once/always when the pulses are enabled.

- p1901.1 = 1

  Checks for a a ground fault once/always when the pulses are enabled.

- p1901.2

  p1901.2 = 0: The checks selected with bit 00 or bit 01 are performed once when the pulses are enabled.

  p1901.2 = 1: The checks selected with bit 00 or bit 01 are performed each time the pulses are enabled.

The ground fault test is only possible when the motor is stationary, and is therefore only realized when flying restart is deactivated (p1200 = 0).

The result of the checks that have been set is displayed in r1902.

The tests slightly delay motor starting, depending on what checks have been selected.

Note

The ground fault and short-circuit test are automatically deactivated as soon as a sine-wave filter is connected, as the filter could be excited by the test pulse.

9.3.8 Motor changeover/selection

9.3.8.1 Description

The motor data set changeover is, for example, used for:

- Changing over between different motors
- Changing over different windings in a motor (e.g. star-delta changeover)
- Motor data adaptation

Note

Switch to a rotating motor

To switch to a rotating motor, the "flying restart" function must be activated.

9.3.8.2 Example of changing over between two motors

Preconditions

- The drive has been commissioned for the first time.
- 2 motor data sets (MDS), p0130 = 2
- 2 drive data sets (DDS), p0180 = 2
- 2 digital outputs to control the auxiliary contactors
- 2 digital inputs to monitor the auxiliary contactors
- 1 digital input to select the data set
- 2 auxiliary contactors with auxiliary contacts (1 NO contact)
- 2 motor contactors with positively-driven auxiliary contacts (1 NC contact, 1 NO contact)

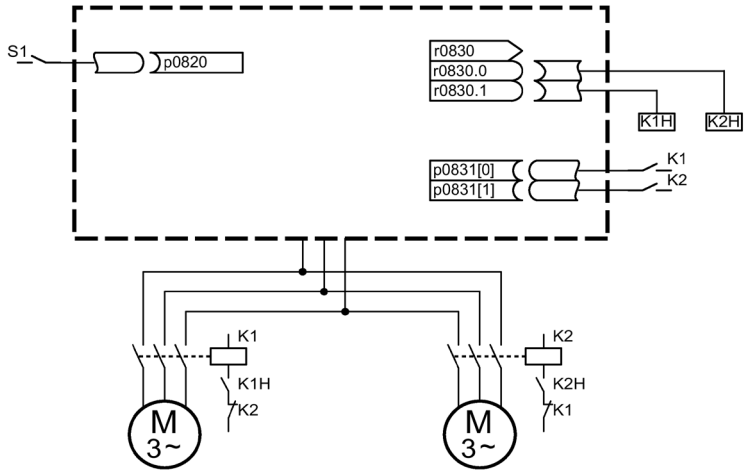

Figure 9-7 Example of motor changeover

Table 9- 4 Settings for motor changeover (example)

Parameter	Settings	Comment
p0130	2	Configure 2 MDS
p0180	2	Configure 2 DDS
p0186[0..1]	0, 1	The MDS are assigned to the DDS.
p0820	Digital input, DDS selection	The digital input to change over the motor is selected via the DDS. Binary coding is used (p0820 = bit 0, etc.).
p0821 ... p0824	0	
p0826[0..1]	1, 2	Different numbers mean different thermal models.
p0827[0..1]	0, 1	Assign the bit from r0830 to the MDS. If p0827[0] = 0, for example, bit r0830.0 is set via DDS0 when MDS0 is selected.
r0830.0 and r0830.1	Digital outputs, auxiliary contactors	The digital outputs for the auxiliary contactors are assigned to the bits.
p0831[0..1]	Digital inputs, auxiliary contacts	The digital inputs for the feedback signal of the motor contactors are assigned.
p0833.00 and .01	0, 0	The drive controls the contactor circuit and pulse inhibition.

Motor changeover sequence

1. Start condition:
   For synchronous motors, the actual speed must be lower than the speed at the start of field weakening. This prevents the regenerative voltage from exceeding the terminal voltage.
2. Pulse suppression:
   The pulses are suppressed following the selection of a new drive data set using p0820 to p0824.
3. Open motor contactor:
   Motor contactor 1 is opened (r0830 = 0) and the status bit "Motor changeover active" (r0835.0) is set.
4. Change over drive data set:
   The requested data set is activated (r0051 = data set currently effective, r0837 = requested data set).
5. Energize motor contactor:
   After the feedback signal (motor contactor opened) from motor contactor 1, the appropriate bit of r0830 is set and motor contactor 2 is energized.
6. Enable pulses:
   After the feedback signal (motor contactor closed) from motor contactor 2, the bit "motor data set changeover active" (r0835.0) is reset and the pulses are enabled. The motor has now been changed over.

9.3.8.3 Function diagram

FP 8565	Drive Data Set (DDS)
FP 8575	Motor Data Sets (MDS)

9.3.8.4 Parameters

- r0051 Drive data set DDS effective
- p0130 Motor data sets (MDS) number
- p0180 Drive data set (DDS) number
- p0186 Motor data sets (MDS) number
- p0819[0...2] Copy drive data set DDS
- p0820 BI: Drive data set selection DDS, bit 0
- p0821 BI: Drive data set selection DDS, bit 1
- p0822 BI: Drive data set selection DDS, bit 2
- p0823 BI: Drive data set selection DDS, bit 3
- p0824 BI: Drive data set selection DDS, bit 4
- p0826 Motor changeover, motor number
- p0827 Motor changeover status word bit number
- p0828 Motor changeover, feedback signal
- r0830 Motor changeover, status
- p0831 Motor changeover, contactor feedback signal
- p0833 Data set changeover configuration

9.3.9 Friction characteristic curve

Description

The friction characteristic is used to compensate for the frictional torque of the motor and driven load. A friction characteristic allows the speed controller to be pre-controlled and improves the control response.

10 points along the characteristic are used for the friction characteristic. The coordinates of every interpolation point are defined by a speed parameter (p382x) and a torque parameter (p383x) (point 1 = p3820 and p3830, point 10 = p3829 and p3839).

Features

- There are 10 points along the characteristic to represent the friction characteristic.
- An automatic function supports the friction characteristic plot.
- A connector output (r3841) can be interconnected as friction torque (p1569).
- The friction characteristic can be activated and deactivated (p3842).

Commissioning

Speeds for making measurements as a function of the maximum speed p1082 are pre-assigned in p382x when commissioning the drive system for the first time. These can be appropriately changed corresponding to the actual requirements.

The automatic friction characteristic plot can be activated using p3845. The characteristic is then plotted the next time that it is enabled.

The following settings are possible:

- p3845 = 0 Friction characteristic plot deactivated
- p3845 = 1 Friction characteristic plot activated, all directions
  The friction characteristic is plotted in both directions of rotation. The result of the positive and negative measurement is averaged and entered into p383x.
- p3845 = 2 Friction characteristic plot activated, positive direction
- p3845 = 3 Friction characteristic plot activated, negative direction

p3847 (friction characteristic plot warm-up period) can be used to set a time for the drive to warm up to the specified operating temperature. During this time, the drive is brought up to and kept at the greatest speed set for plotting the friction characteristic, so that the drive warms up to the operating temperature. Then measurement is started with the highest speed.

WARNING

Unexpected motor movement during the friction characteristic plot

When the friction characteristic is plotted, the drive can cause the motor to move. As a result, the motor may reach maximum speed.

For this reason, entering the area around the drive when it is in this condition can cause death, severe injury or material damage.

- Observe the general safety instructions.
- Ensure that the EMERGENCY STOP functions are always fully functional.

Function diagram

FP 7010	Friction characteristic curve

Parameter

- p3820 Friction characteristic, value n0
- ...
- p3839 Friction characteristic, value M9
- r3840 Friction characteristic status word
- r3841 Friction characteristic, output
- p3842 Activate friction characteristic
- p3843 Friction characteristic smoothing time friction moment difference
- p3844 Friction characteristic number changeover point at the top
- p3845 Activate friction characteristic plot
- p3846 Friction characteristic plot ramp-up/ramp-down time
- p3847 Friction characteristic plot warm-up period

9.3.10 Armature short-circuit braking, DC braking

9.3.10.1 General

The "External armature short-circuit" function for permanent-magnet synchronous motors initiates an external contactor which short-circuits the motor via resistors when the pulses are canceled. This reduces the kinetic energy of the motor.

The "Internal armature short-circuit braking" function for permanent-magnet synchronous motors short-circuits a half-bridge in the power unit to control the motor power consumption, thus braking the motor.

The "DC braking" function for induction motors injects direct current into the motor, thus braking the motor.

9.3.10.2 External armature short-circuit braking

Description

External armature short-circuit braking is only available for synchronous motors. It is used preferably when braking in a hazardous situation, if controlled braking via the drive is no longer possible (for example, in the event of a power failure, an EMERGENCY OFF, etc.) or if no regenerative infeed is used. In this case, the motor stator windings are short-circuited via external braking resistors. This means that an additional resistance is inserted in the motor circuit that supports reducing the kinetic energy of the motor.

The external armature short circuit is activated via p1231 = 1 (with contactor feedback signal) or p1231 = 2 (without contactor feedback signal). It is initiated when the pulses are canceled.

This function controls an external contactor via output terminals, which then short-circuits the motor through resistors when the pulses are canceled.

A prerequisite for the use of the external armature short circuit is the use of a permanent-magnet synchronous motor (p0300 = 2xx).

⚠ WARNING

Motor accelerates uncontrollably for pulling loads

For pulling loads, for an armature short circuit, the motor can uncontrollably accelerate if a mechanical brake is not additionally used. If the motor accelerates uncontrollably this can result in severe injury or death.

- For pulling loads, only use armature short circuit braking to support a mechanical brake (a mechanical brake is mandatory).

NOTICE

Material damage when using motors that are not short-circuit proof

When using motors that are not short-circuit proof, activating the external armature short-circuit braking can damage these motors.

- Only use motors that are short-circuit proof.
- Use suitable resistors for short-circuiting.

Note

Consequences of incorrect parameterization

In case of incorrect parameterization (e.g., induction motor and external armature short-circuit selected), fault F07906 "Armature short circuit / internal voltage protection: Parameterization error" is output.

Function diagram

FP 7014 Technology functions - External armature short circuit

Parameters

- p0300: Mot type selection
- p1230 BI: Armature short-circuit/DC braking activation
- p1231 Armature short-circuit/DC braking configuration
  - 1: External armature short-circuit with contactor feedback signal
  - 2: External armature short-circuit without contactor feedback signal
- p1235 BI: External armature short-circuit, contactor feedback signal
- p1236 External armature short-circuit, contactor feedback signal monitoring time
- p1237 External armature short-circuit, delay time when opening
- r1238 CO: External armature short-circuit state
- r1239 CO/BO: Armature short-circuit/DC braking status word

9.3.10.3 Internal armature short-circuit braking

Description

Internal armature short-circuit braking is only available for synchronous motors. It is used preferably when braking in a hazardous situation, if controlled braking via the drive is no longer possible (for example, in the event of a power failure, an EMERGENCY OFF, etc.) or if no regenerative infeed is used. In this case, the motor stator windings are short-circuited via a half-bridge in the power unit. This means that an additional resistance is inserted in the motor circuit that supports reducing the kinetic energy of the motor.

The internal armature short circuit is configured via p1231 = 4 and activated via p1230. It is initiated when the pulses are canceled.

A prerequisite for the use of the internal armature short circuit is the use of a permanent-magnet synchronous motor (p0300 = 2xx).

DANGER

Electric shock due to armature short-circuit braking

When the armature short-circuit is active, after the pulses have been cancelled all the motor terminals are at half the DC link potential.

Contact with live parts can result in death or serious injury.

- Observe the general safety instructions.

WARNING

Motor accelerates uncontrollably for pulling loads

For pulling loads, for an armature short circuit, the motor can uncontrollably accelerate if a mechanical brake is not additionally used. If the motor accelerates uncontrollably this can result in severe injury or death.

- For pulling loads, only use armature short circuit braking to support a mechanical brake (a mechanical brake is mandatory).

NOTICE

Material damage by using motors that are not short-circuit proof or an incorrectly dimensioned Power Module/Motor Module

When using motors that are not short-circuit proof, activating the external armature short-circuit braking can damage the motors or the Power Module/Motor Module.

- Only use motors that are short-circuit proof.
- Use suitable resistors for short-circuiting.
- Dimension the Power Module/Motor Module for 1.8 times the short circuit current of the motor.

Function diagram

FP 7016 Technology functions - Internal armature short circuit

Parameters

- p0300: Mot type selection
- p1230 BI: Armature short-circuit/DC braking activation
- p1231 Armature short-circuit/DC braking configuration
  - 4: Internal armature short-circuit/DC braking
- r1239 CO/BO: Armature short-circuit/DC braking status word

9.3.10.4 DC braking

Description

DC braking is only available for induction motors. It is used preferably when braking in a hazardous situation, if controlled braking via the drive is no longer possible (for example, in the event of a power failure, an EMERGENCY OFF, etc.) or if no regenerative infeed is used.

DC braking is activated via p1231 = 4, 5, 14. It can be initiated via an input signal p1230 (signal = 1) or a fault response.

⚠ WARNING

Motor accelerates uncontrollably for pulling loads

For pulling loads, when DC braking is used, during the demagnetization time, the motor can accelerate uncontrollably. This can result in severe injury or death. An additional supporting mechanical brake is only closed after the demagnetization time - when the motor is already rotating - and therefore does not prevent the motor from accelerating uncontrollably.

- Do not use DC braking for pulling loads.

DC braking via an input signal

p1231 = 4 (internal armature short-circuit/DC braking)

If DC braking is activated by the digital input signal, the first step is that the pulses are blocked for the duration of the demagnetization time (p0347) of the motor in order to demagnetize the motor - parameter p1234 (speed at the start of DC braking) is not taken into consideration.

Then the braking current (p1232) is applied as long as the input is initiated in order to brake the motor or hold it at standstill.

Cancellation of the input signal for DC braking

If DC braking is withdrawn (p1230 = 0), then the drive returns to its selected operating mode.

The following is applicable:

- for vector control (control with and without encoder):
  - If the "Flying restart" function is activated, then the drive is synchronized with the motor frequency and then returns to closed-loop controlled operation.
  - If the "Flying restart" function is not active, then the drive can only be restarted from standstill without overcurrent fault.
    In this case, when restarting the drive, you must wait until the drive has come to a standstill.
- For U/f control:
  - If the "Flying restart" function is activated, then the converter frequency is synchronized with the motor frequency and the drive is then switched back to U/f operation.
  - If the "Flying restart" function is not activated, then the drive can only be restarted from standstill without overcurrent fault.
    In this case, when restarting the drive, you must wait until the drive has come to a standstill.

DC braking as response to a speed threshold

p1231 = 14 (DC braking below the starting speed)

⚠ WARNING

Acceleration to the setpoint speed after DC braking

After braking, the drive accelerates to the selected setpoint speed. This can result in death, severe injury or material damage.

- Ensure that nobody is in the danger zone and that the mechanical parts can move freely.

DC braking is initiated if a 1 signal is active at binector input p1230 during operation and the actual speed falls below the starting speed (p1234) (the drive must have previously rotated above p1234 plus hysteresis).

Then, after the preceding demagnetization (see p0347), the braking current (p1232) is impressed for the time set in p1233. The drive then switches back to normal operation and accelerates to the selected setpoint speed.

If an encoder is being used, braking will continue until the speed drops below the standstill threshold (p1226) or the time set in p1233 is exceeded.

Cancellation of the input signal for DC braking

The DC braking command can be withdrawn again while braking.

- If time (p1233) was exceeded, then DC braking is inhibited and the system returns to normal operation.
- For OFF1 and OFF3, DC braking is only executed if binector input p1230 has a 1 signal.

DC braking via a fault response still remains possible.

For operation with an encoder, the encoder signal ripple must not exceed 15 rpm in the range of p1234.

DC braking OFF1/OFF3

Activation via p1231 = 5 (DC braking for OFF1/OFF3)

DC braking is activated if an OFF1 or OFF3 command is active. Binector input p1230 is not active.

- If the motor speed ≥ p1234, then the motor is braked down to p1234, demagnetized (see p0347) and switched to DC braking for time (p1233). It is then switched off.
- If the motor speed at OFF1/OFF3 is already < p1234, then the motor is immediately demagnetized, and DC braking activated.
- If an encoder is being used, braking will continue until the speed drops below the standstill threshold (p1226) or the time set in p1233 is exceeded.

Prematurely withdrawing the OFF1 command means that the system switches back to normal operation.

DC braking via a fault response still remains possible.

DC braking as a fault response

Activation via p0491 = 4, p2101 = 6 (armature short-circuit, internal/DC braking)

If DC braking is activated as a fault response, the motor is initially braked in field-oriented mode along the braking ramp up to the threshold set in p1234 (speed at the start of DC braking). The slope of the ramp is identical with that of the OFF1 ramp (parameterized using p1082, p1121). Subsequently, the pulses are disabled for the period in p0347 (demagnetizing time) in order to demagnetize the motor. DC braking will start for the duration set in p1233 (DC braking duration).

- If an encoder is being used, braking will continue until the speed drops below the standstill threshold (p1226) or the time set in p1233 is exceeded.
- If no encoder is present, only the period in p1233 is effective.

Function diagram

FP 7017 Technology functions - DC braking

Parameters

- p0300: Mot type selection
- p0347 Motor de-excitation time
- p0491 Motor encoder fault response: ENCODER
- p1226 Speed threshold for standstill detection
- p1230 BI: Armature short-circuit/DC braking activation
- p1231 Armature short-circuit/DC braking configuration
  - 4: Internal armature short-circuit/DC braking
  - 5: DC braking OFF1/OFF3
  - 14: DC braking below starting speed
- p1232 DC braking, braking current
- p1233 DC braking duration
- p1234 Speed at the start of DC braking
- r1239 CO/BO: Armature short-circuit/DC braking status word
- p2100 Changing the fault reaction, fault number
- p2101 Changing the fault reaction, reaction

9.3.11 Increasing the output frequency

9.3.11.1 Description

In applications that require higher output frequencies, the pulse frequency of the converter may have to be increased.

It may also be necessary to change the pulse frequency to prevent resonances from occurring.

Since increasing the pulse frequency also increases the switching losses, a derating factor for the output current must be taken into account when the drive is configured.

Once the pulse frequency has been increased, the new output currents are automatically included in the calculation for power unit protection.

Note

Use of a sine-wave filter

Use of a sine-wave filter (option L15) must be selected using p0230 = 3 when commissioning. This setting fixes the pulse frequency to 4 kHz or 2.5 kHz and it cannot be changed.

9.3.11.2 Default pulse frequencies

The specified maximum output frequencies can be achieved with the default pulse frequencies listed below.

Table 9- 5 Maximum output frequency with default pulse frequency

Converter rating [kW]	Default pulse frequency [kHz]	Maximum output frequency [Hz]
Line voltage 3 AC 380 ... 480 V		
110 ... 250	2	160
315 ... 800	1.25	100
Line voltage 3 AC 500 ... 690 V		
75 ... 1200	1.25	100

The pulse frequencies set in the factory are also the minimum frequencies.

The scanning times for the inputs and outputs of the customer terminal block TM31 are set in the factory to 4000 µs. This is also the minimum limit.

9.3.11.3 Increasing the pulse frequency

Description

The pulse frequency can be increased in a virtually continuously variable manner to between the value preassigned in the factory and the maximum pulse frequency which can be set.

Procedure

1. Parameter p0009 on the Control Unit must be set to 3 "Basic drive configuration".
2. Parameter p0112 "Sampling times default setting p0115" of the DO VECTOR must be set to 0 "Expert".
3. Any pulse frequency between 1 kHz and 2 kHz can be entered in p0113. If a higher pulse frequency is to be set (e.g. 2.2 kHz), this value must be divided by 2 or by 4 to obtain a result between 1 kHz and 2 kHz (e.g. 2.2 kHz divided by 2 is 1.1 kHz).
4. Not all pulse frequencies are accepted in parameter p0113; in such cases, the alarm "Impermissible value" is output.
5. If the frequency entered in parameter p0113 is not accepted, parameter r0114[0] recommends a different frequency that can deviate from the entered pulse frequency by several Hertz. This frequency should be entered in p0113.

6. After entering the frequency in p0113, parameter p0009 on the Control Unit must be set to 0 "Ready" again.
7. The Control Unit re-initializes. After booting, the pulse frequencies recommended in r0114[i] (i = 1, 2, ...) can be entered in parameter p1800 "Pulse frequency" of the DO VECTOR.

Note

Entering the pulse frequency

The pulse frequency entered in p1800 must correspond precisely to the value given in r0114[i]; otherwise, the entry will be rejected.

9.3.11.4 Maximum output frequency achieved by increasing the pulse frequency

The adjustable pulse frequencies - and therefore the output frequencies that can be achieved with the factory-set current controller clock cycles - are listed below.

Table 9- 6 Maximum output frequencies achieved by increasing the pulse frequency

Current controller clock cycle T_I	Adjustable pulse frequencies f_p	Maximum achievable output frequency f_A	
		V/f operating mode	Vector operating mode
250 µs [1]	2 kHz 4 kHz 8 kHz	166 Hz 333 Hz 550 Hz	166 Hz 333 Hz 480 Hz
400 µs [2]	1.25 kHz 2.50 kHz 5.00 kHz 7.50 kHz	104 Hz 208 Hz 416 Hz 550 Hz	104 Hz 208 Hz 300 Hz [3] 300 Hz [3]

[1] As factory setting, the following devices have a current controller clock cycle of 250 µs - and a pulse frequency of 2 kHz:
- 3 AC 380 ... 480 V: ≤250 kW / 490 A

[2] As factory setting, the following devices have a current controller clock cycle of 400 µs and a pulse frequency of 1.25 kHz:
- 3 AC 380 ... 480 V: ≥315 kW / 605 A
- 3 AC 500 ... 690 V: all power ratings

[3] The maximum output frequency is limited to 300 Hz due to the closed-loop control.

9.3.11.5 Parameters

- p0009 Device commissioning parameter filter
- p0112 Sampling times pre-setting p0115
- p0113 Selects the minimum pulse frequency
- p0115 Sampling times
- p1800 Pulse frequency

9.3.12 Derating behavior at increased pulse frequency

Description

To reduce motor noise or to increase output frequency, the pulse frequency can be increased relative to the factory setting.

The increase in the pulse frequency normally results in a reduction of the maximum output current (see "Technical data/current derating depending on the pulse frequency").

When commissioning the converter the behavior at overload is adjusted in such a manner that the pulse frequency is variably reduced so that the required power can be obtained.

Characteristics:

- The reaction to overload depends on the setting of parameter p0290:
  - p0290 = 0: Reduce output current or output frequency
  - p0290 = 1: No reduction, shutdown when overload threshold is reached
  - p0290 = 2, 12: Reduce the output current or output and pulse frequency (not using I^2t).
  - p0290 = 3, 13: Reduce the pulse frequency (not using I^2t)
- With p0290 = 2, 12 for overload, the pulse frequency (and consequently the output frequency) is first reduced until it has decreased to the rated pulse frequency; then the output frequency is reduced if overload continues to persist.
  The rated pulse frequency is half the inverse value of the current controller clock cycle: 0.5 x 1/p0115[0].
- The pulse frequency is reduced in whole multiples based on the rated pulse frequency (5 kHz -> 2.5 kHz -> 1.25 kHz or 4 kHz -> 2 kHz).
- After entering the maximum speed in p1082, the system automatically calculates whether the pulse frequency is sufficient for the entered maximum speed, if necessary the pulse frequency is increased automatically to a value that is necessary to achieve this.
  For an overload condition, also for p0290 = 2, 12 or 3, 13, this new pulse frequency will no longer be fallen below, the subsequent response (reduce output voltage or shutdown) is initiated.

Exceptions:

- With an activated sine-wave filter (p0230 = 3, 4), this behavior is not permitted because the pulse frequency set in the factory (2.5 kHz or 4 kHz) may not be changed.
  Consequently in this case the selection possibility for the parameter p0290 is limited to "0" and "1".

Activation of the variable pulse frequency

At commissioning the parameter p 0290 is automatically set to the value "2". This activates pulse frequency reduction at overload.

Deactivation of the variable pulse frequency

By changing the parameter p0290 to "0" or "1" the variable pulse frequency is deactivated.

Function diagram

FP 8014 Signals and monitoring functions - thermal monitoring power unit

Parameter

- r0036 Power unit overload I2t
- r0037 CO: Power unit temperatures
- p0115 Sampling times for internal control loops
- p0230 Drive filter type, motor side
- p0290 Power unit overload response
- p1082 Maximum speed
- r2135.13 Fault thermal overload power unit
- r2135.15 Alarm, thermal overload power unit

9.3.13 Pulse frequency wobbling

Description

Pulse frequency wobbling is when the pulse frequency is varied slightly according to a statistical process. The average pulse frequency value is still the value set; the statistical variation of the instantaneous value results in a modified noise spectrum.

This procedure reduces the subjectively noticeable motor noise, especially for the relatively low pulse frequencies set in the factory.

Pulse frequency wobbling is activated with p1810.2 = 1. The amplitude of the static wobbulation signal can be set in the range from 0 % to 20 % using p1811.

Restrictions

- Pulse frequency wobbling can only be activated under the following conditions (p1810.2 = 1):
  - The drive is pulse suppressed.
  - p1800 < 2 x 1000 / p0115[0]
- p1811 (Pulse frequency wobbling amplitude) can only be set under the following conditions:
  - p1802.2 = 1
  - p0230 (output filter) < 3 (no sine-wave filter)
- When pulse frequency wobbling is activated and impulses are enabled, the maximum pulse frequency (p1800) can be set as follows:
  - For p1811 = 0: p1800 ≤ 2 x 1000 / p0115[0]
  - For p1811 > 0: p1800 ≤ 1000 / p0115[0]
- When pulse frequency wobbling is activated and impulses are enabled, if the maximum pulse frequency (p1800) is set to be greater than 1000 / p0115[0], then p1811 is set to 0.
- When pulse frequency wobbling is activated and impulses are suppressed, if the maximum pulse frequency (p1800) is set to be greater than 2 x 1000 / p0115[0], then p1811 and p1810.2 are set to 0.

Note

Disable pulse frequency wobbling

If pulse frequency wobbling is deactivated (p1810.2 = 0), then all the indices of parameter p1811 are set to 0.

Parameter

- p1800 Pulse frequency setpoint
- p1810.2 Wobbling activated
- p1811[D] Pulse frequency wobbling amplitude

9.3.14 Runtime (operating hours counter)

Total system runtime

The total system runtime is indicated in r2114 (Control Unit), and comprises data from r2114[0] (milliseconds) and from r2114[1] (days).
Index 0 indicates the system runtime in milliseconds; after reaching 86,400,000 ms (24 hours) the value is reset. Index 1 indicates the system runtime in days.

The value is saved when the system is switched off.
Once the drive unit has been switched on, the counter continues to run with the value that was saved the last time the drive was switched off.

Relative system runtime

The relative system runtime since the last POWER ON is displayed in p0969 (Control Unit).
The value is indicated in milliseconds and the counter overflows after 49 days.

Actual motor operating hours

The motor operating hours counter p0650 (drive) is started when the pulses are enabled.
When the pulse enable is withdrawn, the counter is stopped and the value saved.

The counter is deactivated with p0651 = 0.

If the maintenance interval set in p0651 is reached, alarm A01590 is triggered. Once the motor has been maintained, the maintenance interval must be reset.

Note

If the motor data set is switched during the star/delta changeover without the motor being replaced, the two values in p0650 must be added to determine the correct number of motor operating hours.

Operating hours counter for the fan

The operating hours of the fan in the power unit are displayed in p0251 (drive).

In this parameter, the number of elapsed hours can only be reset to 0 (e.g. after a fan has been replaced).

The service life of the fan is entered in p0252 (drive).

Alarm A30042 (service life of the fan reached or exceeded) is output when this figure is reached, and also 500 hours beforehand. Evaluation of the fault value in the alarm provides details of the cause of the alarm.

Monitoring is deactivated with p0252 = 0.

Time stamp mode

The mode for the time stamp can be set via parameter p3100.

Setting	Explanation
p3100 = 0	Time stamp based on operating hours
p3100 = 1	Time stamp UTC format
p3100 = 2	Time stamp operating hours + 01.01.2000 Additional setting for firmware V4.7 and higher: With this setting the value in p3102 is used as the time stamp for the error messages. For firmware versions prior to V4.7 the time basis of p2114 was used with the setting p3100 = 0.

Note

Time stamp settings depending on the firmware version

If a project is upgraded from firmware V4.6 to V4.7 then the time stamp settings for the old project are retained. The times displayed for the error messages do not therefore differ from those in the old firmware version.

If a new project is created in firmware version V4.7 and above, the factory setting for the p3100 = 2 and therefore a different time basis for error messages. If the response required is the one for versions older than V4.7 then p3100 = 0 should be set.

9.3.15 Simulation operation

Description

The simulation function is predominantly used to simulate the drive without a motor being connected and without a DC link voltage. In this case, it should be noted that the simulation mode can only be activated under an actual DC link voltage of 40 V. If the voltage lies above this threshold, the simulation mode is reset, and a fault message F07826 is issued.

Communications with a higher-level automation system can be tested using the simulation mode. If the drive is also to return actual values, note that it must be switched over to encoderless operation during simulation mode. This means that large parts of the SINAMICS software (e.g., software channel, sequence control, communications, technology function, etc.) can be tested in advance without requiring a motor.

Another application is to test the correct functioning of the power unit. Especially for drive units with higher power ratings 75 kW (690 V) and 110 kW (400 V), after repairs, it is necessary to test the gating of the power semiconductors. This is done by injecting a low DC voltage as DC link voltage (e.g., 12 V). The drive unit is then powered-up and the pulses enabled.

Note

Deactivated functions in simulation mode

The following functions are deactivated in the simulation mode:

- Motor data identification
- Motor data identification, rotating without encoder
- Pole position identification

No flying restart is carried-out for V/f control and sensorless closed-loop vector control.

Note

Activating binector output r0863.1 in the simulation mode

In the simulation mode, binector output r0863.1 is set = 1. Therefore, before activating the simulation mode, check as to whether additional devices are switched on using the signal. If necessary, the corresponding BICO interconnection should be temporarily removed.

Commissioning

Simulation is activated using p1272 = 1; the following pre-requisites must be fulfilled:

- The drive unit must have been commissioned for the first time (default: Standard induction motors).
- The DC link voltage must lie below 40 V (observe the tolerance of the DC link voltage sensing).

Alarm A07825 (simulation mode activated) must be output during simulation operation.

Parameter

- p1272 Simulation operation

9.3.16 Direction reversal

Description

The direction of rotation of the motor can be reversed using direction reversal via p1821 without having to change the motor rotating field by interchanging two phases on the motor and inverting the encoder signals using p0410.

Reversal via p1821 can be detected from the motor direction of rotation. The speed setpoint and actual value, torque setpoint and actual value remain unchanged, as does the relative position change.

A pulse inhibit must be set prior to attempting reversal.

Direction reversal can be set differently for each drive data set.

Note

Drive data set changeover with differently set direction reversal

When changing over the drive data set to differently set reversing and with pulse approval, fault F7434 is issued.

Reversing can be observed by checking parameters r0069 (phase currents) and r0089 (phase voltage). The absolute position reference is lost on reversal.

The output direction of rotation of the converter can be additionally reversed using p1820. This means that the rotating field can be changed without having to interchange the power connections. If an encoder is being used, the direction of rotation must, when required, be adapted using p0410.

NOTICE

Unintended acceleration of the drive due to external speed actual value

When using an external speed actual value for the speed controller via p1440, positive feedback can occur in the speed control loop. As a consequence, the drive accelerates up to its speed limit and can be damaged.

- When using external speed actual values for the speed controller, additionally change its polarity when reversing the direction of rotation (p1821 = 1).

⚠ WARNING

Excessively high torque due to an inappropriate phase sequence of the motor after direction reversal

If a drive is synchronized to the line supply, when the direction is reversed, high torques can be generated when connecting to the line supply if the phase sequence of the line voltage does not match the phase sequence of the rotating motor. This high torque can destroy the coupling between the motor and load and therefore result in death or severe injury.

- As a consequence, for this constellation, check the phase sequence of the VSM wiring and correct if necessary.

Function diagram

FD 4704, 4715	Encoder evaluation
FD 6730, 6731	Interface to the Motor Module

Parameters

- r0069 Phase currents actual value
- r0089 Phase voltage actual value
- p0410 Encoder inversion actual value
- p1820 Reverse output phase sequence
- p1821 Direction of rotation

9.3.17 Unit changeover

Description

Parameters and process variables for input and output can be switched to a suitable units system (SI units, US units or referenced variables (%)) with the help of the unit changeover function.

The following constraints apply to the unit changeover:

- Unit changeover is only possible for the "VECTOR" and "A_INF" drive object.
- Parameters of the rating plate of the drive converter or the motor rating plate can be changed over between SI/US units; however, a per unit representation is not possible.
- Once the changeover parameter has been changed, all parameters that are assigned to a unit group depending on this parameter are jointly changed over to the new unit.
- A separate parameter is available for selecting technological units (p0595) for the representation of technological variables in the technology controller.
- If a changeover is made to referenced variables and the reference variable is subsequently changed, the % value entered in a parameter will not change.

  Example:

  – A fixed speed of 80% corresponds, for a reference speed of 1500 rpm, to a value of 1200 rpm.

  – If the reference speed is changed to 3000 rpm, the value of 80% is retained and is now 2400 rpm.

Restrictions

- When a unit changeover occurs, rounding to the decimal places is carried out. This can mean that the original value might change by up to one decimal place.
- If a referenced form is selected and the reference parameters (e.g. p2000) are changed retrospectively, the physical significance of some of the control parameters is also adjusted, which can affect the control behavior.
- If the reference variables (p2000 to p2007) are changed in the offline mode in STARTER, there is a risk that the parameter value ranges will be violated. In this case, appropriate fault messages will be displayed when the parameters are loaded to the drive unit.

Changing over the units

The units can be changed over via the AOP30 and via STARTER.

- Unit changeover via AOP30 is always carried out immediately. Once the corresponding parameters have been changed, the values affected are displayed in the new selected unit.
- If STARTER is used, unit changeover can only take place in offline mode in the configuration screen of the corresponding drive object. The new units are not displayed until after the download ("Load project to target system") and subsequent upload ("Load project to PG") have been completed.

Unit groups

Each parameter that can be switched is assigned to a unit group which can be switched within certain limits depending on the group.

This assignment and the units groups for each parameter appear in the parameter list in the SINAMICS List Manual.

The unit groups can be individually switched using 4 parameters (p0100, p0349, p0505 and p0595).

Parameter

- p0010 Commissioning parameter filter
- p0100 IEC/NEMA mot stds
- p0349 Unit system, motor equivalent circuit diagram data
- p0505 Unit system selection
- p0595 Technological unit selection
- p0596 Technological unit reference variable
- p2000 Reference speed reference frequency
- p2001 Reference voltage
- p2002 Reference current
- p2003 Reference torque

- r2004 Reference power
- p2005 Reference angle
- p2006 Reference temperature
- p2007 Reference acceleration

9.3.18 Simple brake control

Description

The "Simple brake control" is used exclusively for the control of holding brakes. The holding brake is used to secure drives against unwanted motion when deactivated.

The control command for releasing and applying the holding brake is transmitted directly to the converter via DRIVE-CLiQ from the Control Unit, which logically combines the signals with the system-internal processes and monitors these signals.

The drive then performs the action and controls the output for the holding brake appropriately.
The mode of operation of the holding brake can be configured using p1215.

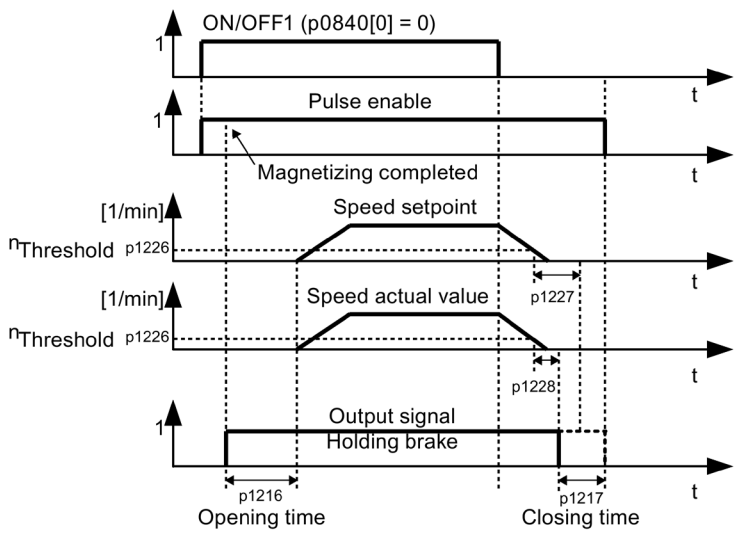

Figure 9-8 Sequence diagram, simple brake control

The start of the closing time for the brake depends on the expiration of the shorter of the two times p1227 (standstill detection monitoring time) and p1228 (pulse cancellation delay time).

WARNING

Improper use of simple brake control

Accidents causing serious injury or death can occur if the basic brake control is incorrectly used.

- Do not use the basic brake control as service brake.
- Carefully observe the special technological and machine-specific conditions and standards for ensuring personnel and machine safety.
- Take into account the risks that can result, e.g. from suspended axes.

Features

- Automatic activation by means of sequence control
- Standstill (zero-speed) monitoring
- Forced brake release (p0855, p1215)
- Application of brake for a 1 signal "Unconditionally close holding brake" (p0858)
- Application of brake after "Enable speed controller" signal has been canceled (p0856)

Signal connections

The holding brake is controlled using free digital outputs on the Control Unit or the TM31. If necessary, control must be realized by means of a relay to connect a holding brake with higher voltage or with higher power demand.

For this, parameter p1215 must be set to "3" (motor holding brake the same as sequence control, connection via BICO) and the appropriate BICO parameters of the selected digital outputs must be interconnected.

Commissioning

If p1215 is set to "0" (no brake available) during initial commissioning and a connected brake is recognized, then simple brake control is automatically activated (p1215 = 1). In this case, fault F07935 "Motor holding brake detected" appears and must be acknowledged.

NOTICE

Material damage due to a destroyed brake for an incorrectly set configuration

If a motor holding brake is being used, the parameter setting p1215 = "0" (no motor holding brake available) means that the motor holding brake remains closed. The brake will be destroyed when the motor moves.

- If there is a motor brake, set parameter p1215 to values > 1.

Notes on setting the release (opening) time (p1216):

- The release time (p1216) should be set longer than the actual release time of the holding brake. As a result, the drive will not accelerate when the brake is closed.

Notes on setting the closing time (p1217):

- The closing time (p1217) should be set longer than the actual closing time of the holding brake. As a result, the pulses are suppressed only after the holding brake is closed.
- If the closing time (p1217) is set too low compared to the actual closing time of the holding brake, the load may drop suddenly.
- If the closing time (p1217) is set too high compared to the actual closing time of the holding brake, the controller acts against the holding brake and thus reduces its service life.

Function diagram

FP 2701	Simple brake control (r0108.14 = 0)

Parameter

- r0056.4 Magnetizing completed
- r0060 CO: Speed setpoint before the setpoint filter
- r0063[0...2] CO: Actual speed value
- r0108.14 Extended brake control
- p0855[C] BI: Unconditionally release holding brake
- p0856 BI: Speed controller enabled
- p0858 BI: Unconditionally apply holding brake
- r0899.12 BO: Holding brake open
- r0899.13 BO: Command, close holding brake
- p1215 Motor holding brake configuration
- p1216 Motor holding brake release time
- p1217 Motor holding brake closing time
- p1226 Threshold for standstill detection
- p1227 Standstill detection monitoring time
- p1228 Pulse suppression delay time
- p1278 Brake control diagnostic evaluation

9.3.19 Synchronization

Description

The "Synchronization" function and an existing VSM10 Voltage Sensing Module (to measure the line voltage) synchronizes a motor to the line supply. The connection to the line supply or the required contactor control can be realized using the existing bypass function or a higher-level control system.

The use of the bypass function permits the temporary (e.g. to perform maintenance work without system standstill) or permanent operation of the motor on the line supply.

The p3800 parameter activates the synchronization. The voltage is acquired via a VSM10 assigned to the drive (via DRIVE-CLiQ) and measures the line supply voltage.

Features

- Connector inputs for the actual voltage sensing of the motor via VSM10 (p3661, r3662)
- Setting a phase difference (p3809)
- Can be activated by parameter (p3800)
- Enable via parameter (p3802)

Function diagram

FP 7020	Technology functions - Synchronizing

Parameter

- p3800[0...n] Sync network drive activation
- p3801[0...n] Sync-line-drive drive object number
- p3802[0...n] BI: Sync network drive enable
- r3803 CO/BO: Sync network drive control word
- r3804 CO: Sync network drive target frequency
- r3805 CO: Sync network drive frequency difference
- p3806[0...n] Sync network drive frequency difference threshold value
- r3808 CO: Sync network drive phase difference
- p3809[0...n] Sync network drive phase setpoint value
- p3811[0...n] Sync network drive frequency limitation
- r3812 CO: Sync network drive correction frequency
- p3813[0...n] Sync network drive phase synchronism threshold value
- r3814 CO: Sync network drive voltage difference
- p3815[0...n] Sync network drive voltage difference threshold value
- r3819.0...7 CO/BO: Sync network drive status word

9.3.20 Energy saving indicator for pumps, fans, and compressors

Function of the energy savings indicator

This function determines the amount of energy used by pumps, fans, and compressors and compares it with the interpolated energy requirement for similar equipment controlled using conventional throttle controls.
The energy saved is calculated over the last 100 operating hours, and is displayed in kWh. For an operating time of less than 100 hours, the potential energy-saving is interpolated up to 100 operating hours.
The flow characteristic with conventional throttle control is specified over 5 adjustable interpolation points.

Background

In a conventionally controlled pump, fan or compressor, the flow rate of the medium is controlled using valves or throttles. In so doing, the machine runs constantly at the rated speed. The system efficiency decreases significantly if the flow rate is reduced by means of valves or throttles. The pressure in the system increases. The motor also consumes energy when the valves or throttles are completely closed, i.e. with a flow rate of Q = 0. In addition, undesirable process-related situations can occur; for example, cavitation in the fluid flow machine or increased temperature rise of the fluid flow machine and the medium.

As a result of variable speed operation, a drive operating under partial load conditions consumes considerably less energy than with conventional process control using valves or throttles. This applies in particular for pumps, fans, and compressors with parabolic load characteristics. With SINAMICS, a closed-loop control of the flow rate or pressure is achieved by employing closed-loop speed control of the pump, fan or compressor. As a consequence, the plant or system is controlled close to its maximum efficiency over the complete operating range.

In comparison to pumps, fans, and compressors, machines with linear or constant load characteristic (e.g. conveyor drives or positive displacement pumps) have lower potential savings.

Energy saving by using a variable speed drive

When a variable speed drive is used, the flow rate of the pump, fan, or compressor is controlled as a function of speed. The flow rate changes proportionally with the speed of the continuous-flow machine. Any existing valve or throttle remains open. Therefore, the equipment works close to optimum efficiency and consumes considerably less energy, particularly in the partial load range, than equipment controlled by means of valves or throttles.

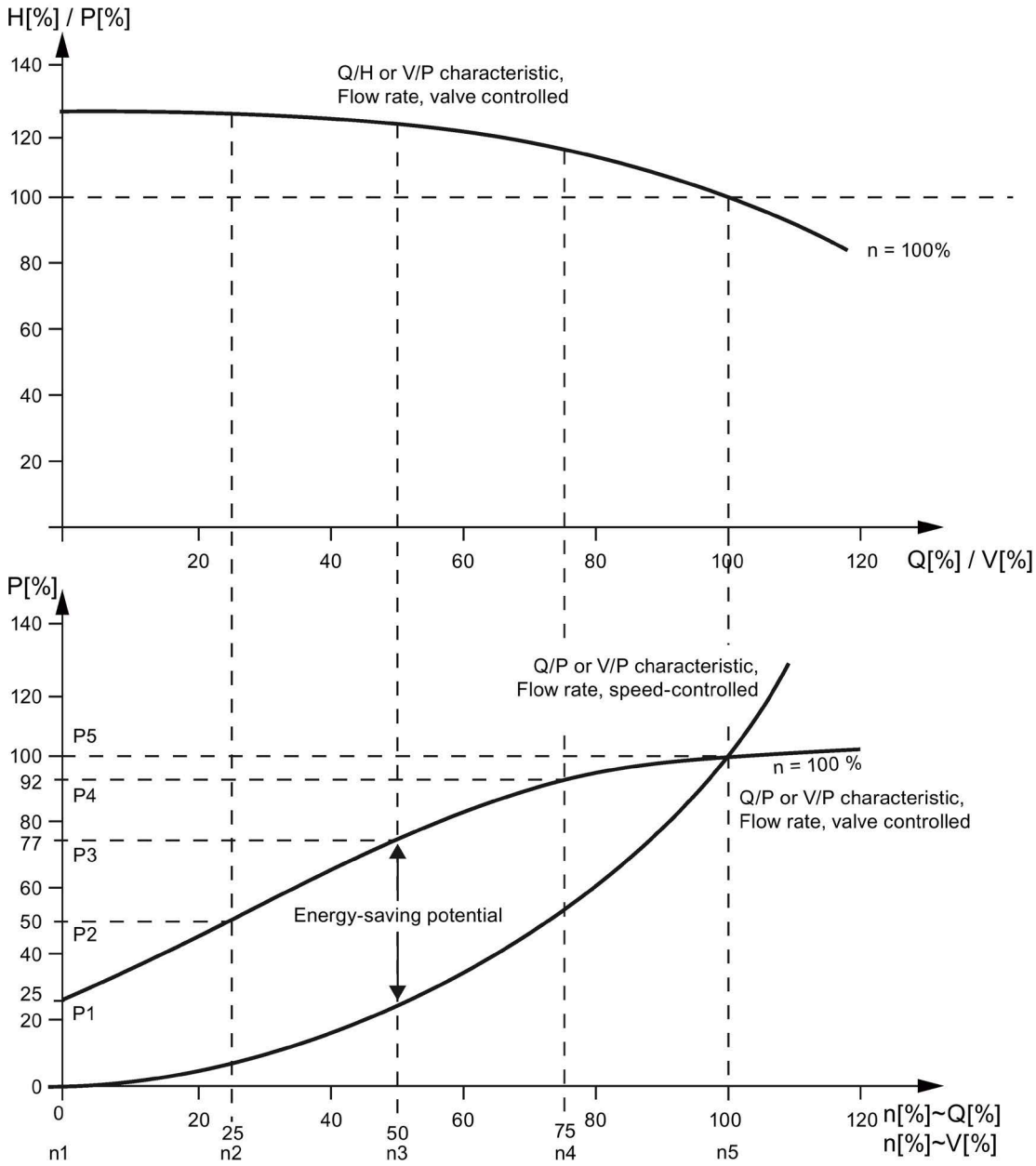

Upper characteristic:

H[%] = Head, P[%] = Flow pressure, Q[%] = Flow rate, V[%] = Volumetric flow

Lower characteristic:

P[%] = Power drawn by the conveyor motor, n[%] = Speed of conveyor motor

Interpolation points p3320 to p3329 for system characteristic with n = 100%:

P1...P5 = Power drawn, n1...n5 = Speed in accordance with variable speed motor

Figure 9-9 Energy saving potential

Adapting the pump, fan, or compressor characteristic

The 5 interpolation points of the pump, fan, or compressor characteristic are entered using parameters p3320 to p3329. This characteristic can be configured individually for each drive data set.

Table 9- 7 Interpolation points of the pump, fan, or compressor characteristic

Interpolation point	Parameter	Factory setting: P: Power in % n: Speed in %	
1	p3320	P1 = 25.00	
	p3321	n1 = 0.00	
2	p3322	P2 = 50.00	
	p3323	n2 = 25.00	
3	p3324	P3 = 77.00	
	p3325	n3 = 50.00	
4	p3326	P4 = 92.00	
	p3327	n4 = 75.00	
5	p3328	P5 = 100.00	
	p3329	n5 = 100.00	

Note

Consequences of not adjusting the pump, fan, or compressor curve

If the interpolation points of the pump, fan, or compressor curve are not adapted, the factory setting will be used to calculate the energy saving indicator. The values of the factory setting could then deviate from the equipment characteristic and cause incorrect calculation of the actual energy savings.

Energy saving indication

The energy saving is displayed in parameter r0041.

By setting p0040 = 1, the value of parameter r0041 is reset to 0. Parameter p0040 is then automatically set to 0.

9.3.21 Write protection

Description

Write protection is used to prevent setting parameters from being accidentally changed. No password is required for write protection.

Activating write protection

Write protection can be activated as follows:

- With STARTER in the online mode, after selecting the drive unit via **Project** > **Write protection drive unit** > **Activate**.
- Using the AOP30 operator panel via p7761 = 1.

All setting parameters involved with write protection can no longer be changed.

In STARTER all write-protected setting parameters have a gray background in the expert list and in the operating screen forms.

If, in AOP30, an attempt is made to change a write-protected setting parameter, then this is rejected with the corresponding error message.

Write requests from write-protected setting parameters via communication are treated in different ways:

- Parameter changes involving class 1 controllers (controls, e.g. SIMATIC) are executed.
- Parameter changes of class 2 controllers (engineering or commissioning total, e.g. STARTER) are not executed.

Deactivating write protection

Write protection can be deactivated as follows:

- With STARTER in the online mode, after selecting the drive unit via **Project** > **Write protection drive unit** > **Deactivate**.
- Using the AOP30 operator panel via p7761 = 0.

Write protection status

The status of write protection can be displayed using parameter r7760.0:

- r7760.0 = 0: Write protection is not active
- r7760.0 = 1: Write protection is active

Exceptions when write protection is active

The following functions or adjustable parameters are excluded from the write protection:

- Changing the access level (p0003)
- Commissioning the parameter filter (p0009)
- Module detection via LED (p0124, p0144, p0154)
- Resetting parameters (p0972, p0976)
- Saving parameters (p0977)
- Acknowledge a fault (p2102, p3981)
- RTC time stamp, set time, synchronization (p3100, p3101, p3103)
- Master control mode selection (p3985)
- Trace (p 4700ff.)
- Function generator (p4800ff.)
- Activating/deactivating write protection (p7761)
- Identification and maintenance (p8806ff.)
- Flashing component (p9210, p9211)

Note

List of the exceptions for activated write protection

A list of the adjustable parameters which, in spite of the write protection, can be changed is provided in the List Manual.
The list has the designation "WRITE_NO_LOCK".

Write protection for multi-master fieldbus systems

For fieldbus systems (e.g. CAN bus), which can be operated as multi-master bus systems, when write protection is activated, all setting parameters can be accessed.

For these bus systems, parameter p7762 can be used to set the behavior when write protection is activated:

- p7762 = 0: Write access independent of p7761
- p7762 = 1: Write access dependent on p7761

Parameter

- r7760 Write protection/know-how protection status
- p7761 Write protection
- p7762 Write protection multi-master fieldbus system access behavior

9.3.22 Know-how protection

9.3.22.1 Description

The know-how protection is used, for example, so that machine manufacturers can encrypt their configuration know-how and protect it against changes and copying.

For know-how protection, a password is required; saved data is encrypted.

When know-how protection is activated, most of the setting parameters cannot be changed and cannot be read out. The display parameters are shown unchanged. The contents of screen forms in STARTER are not displayed.

Know-how protection can be combined with copy protection.

Characteristics when know-how protection is activated

- Except for a small number of system parameters and the parameters specified in an exception list, all other parameters are locked.
- The values of these parameters are not visible in the expert list and so cannot be changed. The text "know-how protected" appears instead of the parameter values.
- Know-how protected parameters can be hidden in the expert list. This requires that the "not know-how protected" filter is set in the "Online value" column.
- The values of display parameters remain visible.
- The contents of screen forms are not displayed when know-how protection is active.
- Know-how protection can be combined with copy protection.
- The same know-how protection is used for scripts.
- The drive unit as well as the drive objects and DCC charts therein can be displayed as inconsistent.

Know-how protection with and without copy protection.

To protect the drive unit settings against unauthorized copying, in addition to know-how protection, you can also activate copy protection.

Know-how protection without copy protection is possible with or without memory card.

Know-how protection with copy protection is only possible with a Siemens memory card.

Know-how protection without copy protection

The drive unit can be operated with or without a memory card. The drive unit settings can be transferred to other drive units using a memory card, an operator panel or STARTER.

Know-how protection with basic copy protection

The drive unit can only be operated if the associated memory card with the drive unit settings is inserted into it. After replacing a drive unit, to be able to operate the new one with the settings of the replaced drive unit without knowing the password, the memory card must be inserted in the new drive unit.

Know-how protection with extended copy protection

The drive unit can only be operated if the associated memory card with the drive unit settings is inserted into it. It is not possible to insert and use the memory card in another drive unit without knowing the password.

Functions, which can be executed when know-how protection is active

The following functions can be executed although know-how protection is active:

- Restoring factory settings
- Saving parameters
- Acknowledging faults
- Displaying faults and alarms
- Displaying the history of faults and alarms
- Reading out the diagnostic buffer
- Switching over to the control panel (complete control panel functionality: Fetch master control, all buttons and setting parameters)
- Displaying created acceptance documentation

Note

List of the exceptions when know-how protection is activated

A list of the adjustable parameters which, in spite of activated know-how protection, can be changed, is provided in the List Manual.
The list has the designation "KHP_WRITE_NO_LOCK".

Functions, which cannot be executed when know-how protection is active

The following functions cannot be executed when know-how protection is active:

- Download the drive device settings
- Auto Servo Tuning
- Stationary or rotating measurement of the motor data identification
- Clear fault and alarm buffer
- Generating acceptance documentation for safety functions

Functions that can be executed optionally when know-how protection is active

The functions listed below can be executed for activated know-how protection provided diagnostic functions were permitted when it was activated:

- Trace function
- Function generator
- Measuring functions

Setting parameters, which can only be read when know-how protection is active

The following setting parameters cannot be changed, but can be read, when know-how protection is activated:

- Motor parameters (p0100, p0300, p0304, p0305, p0349)
- Data sets (p0120, p0130, p0140, p0150, p0170, p0180)
- Encoder type (p0400)
- Units (p0505, p0595)
- Open-loop control parameters (p0806, p0864, p0870)
- Speeds, torques (p1080, p1082, p1520, p1532)
- Reference quantities (p2000, p2001, p2002, p2003, p2005, p2006, p2007)

These parameters are shown in STARTER in the expert list with a gray background.

Note

List of the setting parameters, which can only be read when know-how protection is active

A list of the setting parameters, which can only be read when know-how protection is activated, are provided in the List Manual.
The list has the designation "KHP_ACTIVE_READ".

AOP30 with activated know-how protection

When know-how protection is activated, the AOP30 operator panel does not show protected parameters.

The setting parameters, which can only be read when know-how protection is active, are displayed. An attempt to change such an adjustable parameter, will be rejected and an error message displayed.

9.3.22.2 Activating know-how protection

Know-how protection can be activated via STARTER in the online mode.

Activating know-how protection

Know-how protection is activated via STARTER in the online mode as follows:

- Select the drive unit via **Project** > **Know-how protection drive unit** > **Activate**.
- A dialog appears in which the following settings can be made:
  - It can be selected as to whether know-how protection should be realized with or without copy protection:

    - Without copy protection (factory setting)

    - With basic copy protection (permanently linked to the memory card)

    - With extended copy protection (permanently linked to the memory card and Control Unit)

    Further, you can select whether diagnostic functions are permitted.
  - By clicking on **Define** an additional dialog opens, in which the password can be entered and acknowledged. The password must comprise at least one character, it may not exceed a length of 30 characters, all characters are permissible.

    Note

    Password check for know-how protection and Windows language settings

    A change to the Windows language settings after activating know-how protection can cause errors for a subsequent password verification. As a consequence, only characters from the ASCII character set should be used for the password.

  - If **Copy from RAM to ROM** is selected, the settings are permanently saved after exiting the screen form.
    If **Copy RAM to ROM** is not selected, then the settings for know-how protection are only saved non-retentively and are no longer available after the system has been switched on the next time.
- After the dialog is closed with **OK**, know-how protection is activated and the data (parameters, DCC) are saved as encrypted data on the memory card. If larger data volumes must be encrypted, then a progress display informs you that the encryption or the activation of the know-how protection is still running.
  In all protected adjustable parameters in the expert list, instead of the parameter value, the text "know-protected" is shown.

  Note

  For published DCC parameters, the entry "--" appears in the expert list instead of the text "Know-how protected".

Note regarding know-how protection

Note

Safely deleting existing unencrypted data

If unencrypted data have already been saved on the memory card before saving encrypted data, then this data will not be safely deleted. No special deletion method is applied in order to completely and finally remove unencrypted data from the memory card.

In this case, users must ensure that the unencrypted data are safely and reliably deleted, for instance by using special PC-based tools.

9.3.22.3 Deactivating know-how protection

Know-how protection can be deactivated via STARTER in the online mode.

Deactivating know-how protection

Know-how protection is deactivated via STARTER in the online mode as follows:

- Select the drive unit via **Project** > **Know-how protection drive unit** > **Deactivate**.
- A dialog appears in which the know-how protection can be temporarily or permanently deactivated:
  - Temporary deactivation:
    Select **temporary** and enter the password, accept using **OK**.
  - Final deactivation:
    Select **final** and enter the password, select **Copy RAM to ROM** and accept using **OK**.

Note when deactivating know-how protection

Note

Permanently or temporarily deactivating know-how protection

Temporary deactivation means that know-how protection is active again after a POWER ON. Data is still saved on the memory card in an encrypted form. The existing password is used to reactivate know-how protection.

Final deactivation means that know-how protection is no longer active, even after a POWER ON. Data is saved on the memory card in an unencrypted form (i.e. data is no longer encrypted).

Even if know-how protection has been finally deactivated, it can still be reactivated when required.

9.3.22.4 Changing the know-how protection password

Changing the password for know-how protection can be realized via STARTER in the online mode.

Changing the password

The password for know-how protection can be changed as follows via STARTER in the online mode:

- Select the drive unit via **Project** > **Know-how protection drive unit** > **Change password**.
- A dialog appears in which the following entries can be made:
  - Enter the old password
  - Enter the new password
    The password must comprise at least one character, it may not exceed a length of 30 characters, all characters are permissible.
  - Confirm the new password
- If **Copy from RAM to ROM** is selected, the settings are permanently saved after exiting the screen form.
  If **Copy RAM to ROM** is not selected, then the settings for know-how protection are only saved non-retentively and are no longer available after the system has been switched on the next time.

  After closing the dialog with **OK**, the changed password is activated.

9.3.22.5 OEM exception list

Setting parameters can be excluded from know-how protection using the OEM exception list. The parameters contained in the exception list can also be read and changed even when know-how protection is activated.

The exception list can only be generated via the expert list in STARTER in online mode. Parameter p7763 is used to define the number of parameters that should be contained in the exception list. In parameter p7764, in each index, the parameter number that should be included in the exception list is entered. The exception list can be separately generated for each drive object.

Note

Changing parameter p7763

After parameter p7763 has been changed, a "Load to PG" must be realized so that the index field of parameter p7764 is adapted.

In the factory setting, the exception list of the Control Unit consists of one parameter (p7763 = 1). Parameter p7766 (password input) is entered into parameter p7764[0] of the Control Unit; this means that when know-how protection is activated, the password for deactivation can be entered.

Note

Absolute know-how protection

If parameter p7766 is removed from the exception list and know-how protection is activated, then a password can no longer be entered. This means that know-how protection can no longer be deactivated!
In this case, the drive can only be accessed by restoring the factory settings.

9.3.22.6 Loading data with know-how protection into the file system

Data with know-how protection can be directly loaded or saved to the file system from the drive unit. The activated know-how protection ensures that the data cannot be forwarded to unauthorized third parties.

The following end user applications are conceivable:

- Encrypted SINAMICS data must be adapted.
- The memory card is defective.
- The Control Unit of the drive is defective.

In these cases, the machine builder (OEM) can create a new encrypted subproject (for a drive object) using STARTER. The serial number of a new memory card or a new Control Unit is saved in this encrypted data set in advance.

Application example: Control Unit is defective

Scenario:

The Control Unit of the end user is defective.

The machine manufacturer (OEM) has the end user's STARTER project files of the machine.

Sequence:

1. The end user sends the OEM the serial numbers of the new Control Unit (r7758) and the new memory card (r7843), and specifies the machine in which the Control Unit is installed.
2. The OEM loads the STARTER project data of the end user.
3. The OEM initiates the STARTER function "Load to file system".
   - The OEM specifies whether the data is to be stored zipped or unzipped.
   - The OEM makes the settings required for know-how protection.
4. The OEM sends the stored data to the end user (e.g. by e-mail).

5. The end user copies the "User" directory to the new memory card and inserts it into the new Control Unit.
6. The end user switches on the drive.

   When powering up, the Control Unit checks the new serial numbers and deletes the values p7759 and p7769 if they match.

   After it has powered-up without any errors, the Control Unit is ready for operation. The know-how protection is active.

   If the serial numbers do not match, then fault F13100 is output.

   If required, the end user must re-enter the changed parameters from the OEM exception lists.

Calling the "Load to File System" dialog box

1. Select the drive unit in the project navigator of the STARTER project.
2. Call the "Load to file system" function.

   The "Load to File System" dialog box opens.

Specifying general memory data

The "General" tab is displayed automatically when the dialog is called.

1. The "Standard storage" is activated as storage option in the factory setting.

   If the data is to be saved compressed, then the "Save compressed" (.zip archive) must be selected.
2. The "Store additional data on the target device" option is deactivated in the factory setting.

   This option must be activated, if additional data, for example, program sources, are to be saved to the target device.

   – Optionally, graphic chart data can be saved using the "Including DCC chart data".
3. The target directory to save the data is entered by specifying the path in the appropriate input field - or by clicking on "Browse" and selecting the directory in the file system.

Configuring know-how protection

The settings for know-how protection are made under the "Drive unit know-how protection" tab.

1. Click the "Drive unit know-how protection" tab.

   Option "Without know-how protection" is active as default setting. If data is to be saved without protection (not recommended), then at this point, the dialog can be exited with "OK" or "Cancel".

2. If data is to be saved with protection, then one of the following options must be activated:
   - "Know-how protection without copy protection"
     Inputs required: "New password" and "Confirm password"
   - "Know-how protection with basic copy protection (permanently linked to the memory card)"
     Inputs required: "New password", "Confirm password" and "Memory card specified serial number"
   - "Know-how protection with extended copy protection (permanently linked to the memory card and CU)"
     Inputs required: "New password", "Confirm password" "Memory card specified serial number" and "Control Unit specified serial number"

   The input fields for the passwords and the serial numbers become active (depending on the activated know-how protection option).

   The active input fields are mandatory inputs.

3. The required password is entered in the "New password" field and reentered in the "Confirm password" field.
4. If the appropriate input fields are active, enter the serial number:
   - The serial number of the new memory card for which the data is intended
   - The serial number of the Control Unit
5. If, in spite of active know-how protection, diagnostic functions are also to be permitted, then option "Allow diagnostic functions (trace and measuring functions)" must be activated.

   This allows the trace function, the measuring function and the function generator to be used despite know-how protection.

6. Click "OK" to confirm the settings you made.

Result

The activation of the know-how protection starts the encryption of the subproject data. If larger data volumes must be encrypted, then a progress display informs you that the encryption or the activation of the know-how protection is still running. Using this encrypted data, an end user can install a new memory card for his drive unit.

9.3.22.7 Overview of important parameters

- r7758[0...19] KHP Control Unit serial number
- p7759[0...19] KHP Control Unit reference serial number
- r7760 Write protection/know-how protection status
- p7763 KHP OEM exception list number of indices for p7764
- p7764[0...n] KHP OEM exception list
- p7765 KHP memory card copy protection
- p7766[0...29] KHP password input
- p7767[0...29] KHP password new
- p7768[0...29] KHP password confirmation
- p7769}0...20] KHP memory card reference serial number
- r7843[0...20] Memory card serial number

KHP: Know-how protection (know-how protection)

9.3.23 Essential service mode

Description

Essential **S**ervice **M**ode (ESM) enables the drive to be operated for as long as possible if needed, even when errors occur.

For instance, this function can be used in applications in which an undesirable standstill can cause significant subsequent damage.
For example, if a fire breaks out in a large building, a fan should extract smoke and other gases so that people can be evacuated.

Features

- In essential service mode, the automatic restart function is activated irrespective of the setting of parameter p1210. The result of this is that the drive is automatically switched back on if an OFF2 occurs due to an internal fault.
- In essential service mode, converter shutdown due to faults is suppressed. Exceptions to this rule are faults that would lead to the destruction of the device.
- Essential service mode is triggered by a continuous signal via the digital input, which is set as a signal source via p3880.
- If the drive is in bypass mode when essential service mode is activated, the motor will automatically switch over to converter operation. In this case, there is no back synchronization to the converter, i.e. the "Flying restart" function must be activated (p1200 = 1).

- When essential service mode ends, the converter returns to normal operation and responds according to the currently pending commands and setpoints.

Note

Loss of warranty for a converter operated in the essential service mode

Should essential service mode apply, the customer can no longer lodge any claims for warranty.

The essential service mode is an exceptional state, and is not suitable for continuous operation.

The essential service mode can have the following effects:

- Exceptionally high temperatures inside and outside the converter
- Open fire inside and outside the converter
- Emissions of light, noise, particles, gases.

The converter logs the essential service mode, and the faults that occur while in essential service mode in a password-protected memory. This data is only accessible for the service and repair organization.

WARNING

Active essential service mode and selection of "Safe Torque Off"

Using the essential service mode and simultaneously using a Safety Integrated Function can lead to the essential service mode being exited, and can therefore result in death or severe injury, e.g. when a smoke extraction system fails.
The background is that during the essential service mode, the motor must continue to run as long as possible and also must not be shut down by a Safety Integrated Function.

- Do not use a Safety Integrated function simultaneously with the essential service mode.

Activating essential service mode

Essential service mode is activated through a continuous signal to the digital input, which is set as a signal source via p3880.

Only the digital inputs on the Control Unit are permitted as signal sources:

- r0722.x (high active)
- r0723.x (low active)

x = 0, 1, 2, 3, 4, 5, 6, 7, 8, 9, 10, 11, 12, 13, 14, 15, 16, 17, 20, 21

Note

Special features when the essential service mode is either activated or deactivated

Signal p3880 = 1 activates the essential service mode:

- If the motor was switched off by activating essential service mode, the converter switches the motor on.
- If the motor was switched on by activating essential service mode, the converter switches the speed setpoint to "ESM setpoint source".

Signal p3880 = 0 deactivates the essential service mode:

- If one of the OFF1, OFF2 or OFF3 commands is active, the converter switches off the motor.
- If neither OFF1, OFF2 nor OFF3 is active, the converter switches the speed setpoint from the "ESM setpoint source" to the normal setpoint source.

Note

Emergency operation is not fully functional until one of the following requirements is met:

- p3880 is wired offline; a POWER ON of the CU must then be performed after the download to the device.
- p3880 is wired online.

Additional interconnection after commissioning

Carry out the additional interconnection after commissioning.

Table 9- 8 Additional interconnection for emergency operation

Sink			Source		
Parameter	**Description**	**DO**	**Parameter**	**Description**	**DO**
p1207	BI: Automatic restart (AR) - connection to the following drive object	A_INF	r1214.2	Restart active	Vector
p2105[0]	BI: Acknowledge fault 3	A_INF	r1214.3	Set acknowledgment command	Vector
p0840[0]	BI: ON/OFF (OFF1)	A_INF	r2811	AND condition fulfilled	Vector
p1208[0]	Infeed fault	Vector	r2139.3	Fault active	A_INF
p1208[1]	Infeed power failure	Vector	r0863.2	Infeed power failure	A_INF
p2822[0]	BI: NOT logic operation 0 input	Vector	r0899.6	Infeed power failure	A_INF
p2810[0]	BI: NOT logic operation input 1	Vector	r0863.1	Control contactor	Vector
p2810[1]	BI: AND logic operation input 2	Vector	r2823.0	NOT logic operation 0 result	Vector

Setpoint source for essential service mode

When essential service mode is activated, the setpoint which is set via p3881 is switched to:

- p3881 = 0: Last known setpoint (r1078 smoothed) - factory setting
- p3881 = 1: Fixed speed setpoint 15 (p1015)
- p3881 = 3: Fieldbus
- p3881 = 5: TB30/TM31 analog input
- p3881 = 6: Enable of response OFF1
- p3881 = 7: Enable of response OFF2

When using the analog setpoint value from TB30/TM31 (p3881 = 5) the setpoint is used that is set via p3886.

If, when setting p3881 = 3 or 5, the setpoint is lost (e.g. cable break or fieldbus failure), then the alternative setpoint that is set via p3882 is automatically switched to:

- p3882 = 0: Last known setpoint (r1078 smoothed) - factory setting
- p3882 = 1: Fixed speed setpoint 15 (p1015)
- p3882 = 2: Maximum speed (p1082)

Direction of rotation in essential service mode

Depending on your system, you may have to invert the setpoint locally for essential service mode. To do this, parameter p3883 can be linked with a free digital input:

- Signal in p3883 = 0: The direction of rotation of the setpoint parameterized for essential service mode is maintained
- Signal in p3883 = 1: Reversal of the direction of rotation of the setpoint parameterized for essential service mode

Automatic restart

In essential service mode, if the automatic restart function is activated and the settings of parameters p1206, 1210 and p1212 then have no effect. The settings in p1211 (automatic restart, start attempts) and p1213 (automatic restart monitoring time) are still effective. The setting of p1213 [0] = p1213 [1] = 0.0 s allows an unlimited number of startup attempts.

Bypass as a fallback strategy

If the converter fails due to an internal, non-acknowledgeable fault, essential service mode is no longer possible. In this case, the motor can be operated via the controller in bypass mode in the event of converter failure. For this purpose, bit 7 of the status word for the automatic restart (r1214.7) must be interconnected with p1266.
The bypass function must also be activated without synchronization (p1260 ≠ 3), and the changeover source for the bypass must be set to "Bypass via signal (BI: p1266)" (p1267.0 = 1).

You must ensure that r1214.7 is also set, otherwise there will be no changeover to the line supply. To end the bypass mode, the essential service mode must be deactivated. There is no switchover to converter operation (drive coasts down).

Automatic switchover to encoderless operation for encoder faults

By automatically pre-assigning parameter p0491 (motor encoder fault response ENCODER) with the value "1", then the drive maintains the emergency service mode even when there is an encoder fault.

In addition, setting values "5" or "6" can be used. These setting values are lost after a power interruption at the Control Unit - or when the drive restarts. After this, the drive continues to operate with automatic pre-assignment (p0491 = 1).

⚠ WARNING

Pending drive standstill in the essential service mode (ESM)

As a result of the automatic drive switchover to encoderless operation, controlled starting of the drive **after a power interruption** can fail, in spite of the fact that the automatic restart function (AR) is activated. If the drive comes to a standstill, then this can cause severe injury or death, e.g. for ventilation and smoke extraction systems.

- To avoid the motor coming to a standstill, when the essential service mode (ESM) is activated, switchover the drive to encoderless operation.

Display of activations/faults of essential service mode

The number of activations and the errors that occurred during essential service mode are displayed in parameter r3887:

- r3887[0]: Number of activations of essential service mode
- r3887[1]: Number of faults during essential service mode

The counter statuses in r3887 can be reset with p3888 = 1.

Function diagram

FP 3040	Setpoint channel - Direction limitation and direction reversal
FP 7033	Technology functions - essential service mode (ESM)

Parameters

- p3880 BI: ESM activation signal source
- p3881 ESM setpoint source
- p3882 ESM alternative setpoint source
- p3883 BI: ESM direction of rotation signal source
- p3886 CI: ESM setpoint TB30/TM31 analog input
- r3887[0...1] ESM activations/faults, quantity
- p3888 ESM activations/faults, reset quantity
- r3889.0...10 CO/BO: ESM status word

9.3.24 Web server

9.3.24.1 Description

General information

The web server is a web-based commissioning tool for SINAMICS converters, and provides information on a connected SINAMICS converter via its web pages.

You can open the web server via the Internet browser of your commissioning device.

The most important functions of the Web server are described below. However, the "Files" and "User´s Area" display areas of the Web server are described in detail in a separate document (see "User-defined Web pages"). For this reason, these display areas are not described in this description.

Note

Total memory size of user files

The sum of the data stored via the web server must not exceed the total memory size of 100 MB. The total memory size of the stored data influences the backup times. The larger the data quantity, the longer the backup takes.

Configuration

The web server is already active in the factory settings.

The web server is either directly configured in the web server or via p8986 (web server configuration).

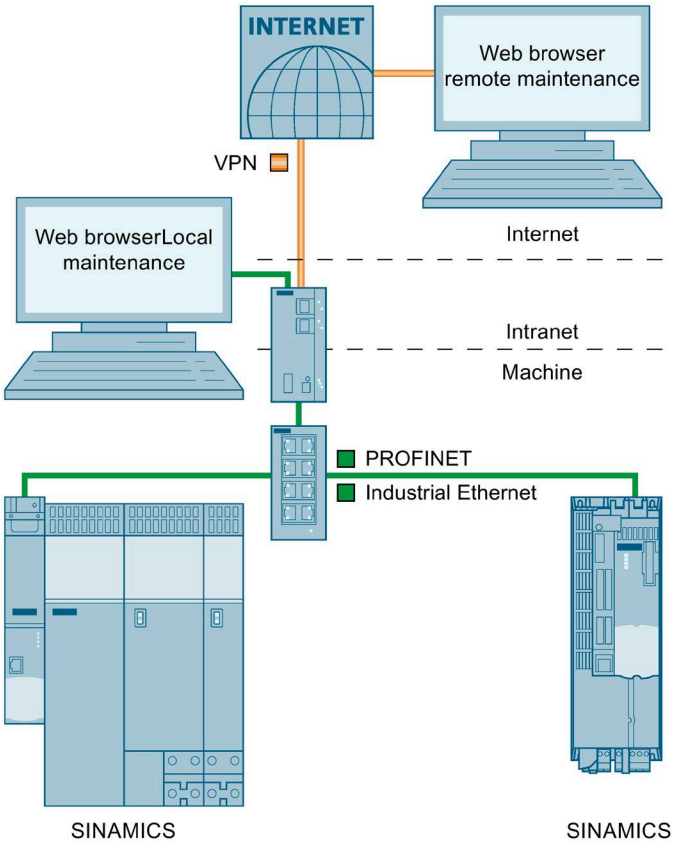

Figure 9-10 Web server structure

Communication

The web server supports unencrypted communication via the HTTP protocol as well as encrypted communication via the HTTPS protocol.

The type of transmission is defined by entering the corresponding address.

For safety reasons, secure transmission can be forced by deactivation of the http port.

Accessing the web server

The web server is accessed via the following interfaces:

- Service interface X127 of the CU320-2 DP or CU320-2 PN Control Unit
- PROFINET interface X150 of the CU320-2 PN

Access via the service interface X127

The service interface has the following default setting:

- IP address: 169.254.11.22
- Subnet mask: 255.255.0.0
- Access via the service interface is **activated by default** in the web server.
- Data transfer via HTTP (factory setting) and HTTPS connection possible.

NOTICE
Risk of software manipulation with HTTP connection The HTTP protocol transfers data without encryption. This facilitates, for example, password theft and can lead to data manipulation by unauthorized parties and thus to damage. • Limit access to HTTPS connections so that all data is transferred in encrypted form.

Interface X127 can also be connected to an external WLAN access point, and from this an IP address can be sourced via DHCP. This is just a temporary situation, and is only used for commissioning and/or diagnostics with mobile devices. The subsequently described security notes must be carefully observed when doing this.

Note

Service interface X127 is intended for commissioning and diagnostics, which means that it must always be accessible (e.g. for service).

The following restrictions apply in addition:

- Only local access is permissible.
- No networking - or only local networking is permissible in a locked control cabinet.

If it is necessary to remotely access the electrical cabinet, then additional security measures must be applied so that misuse through sabotage, data manipulation by unqualified persons and intercepting confidential data is completely ruled out.

Access via PROFINET interface X150 of the CU320-2 PN

PROFINET interface X150 of the CU320-2 PN is preset as follows:

- Access via the PROFINET interface is **deactivated by default** in the web server.
- The PROFINET interface can be activated using parameter p8984[1]. Because parameter p8984[1] is a BICO parameter, the interface can also be activated via a key-operated switch.
- Data transfer is only possible via an HTTPS connection.

Note

Security measures for communication via PROFINET

In accordance with the Defense in Depth concept, PROFINET must be separated from the remaining system/plant network. Access to cables and possibly open connections must be implemented in a protected fashion, such as in a control cabinet.

Note

The IP addresses of the service and PROFINET interfaces must not be in the same subnet.

Access protection and access rights

Access protection in the web server comprises the following protective measures:

- User roles

  Access to the converter is possible in the web server via 2 defined user roles ("Administrator" and "SINAMICS") with different access rights.

  We recommend that secure passwords are created to access SINAMICS converters.
- Access rights to parameter lists

  Access rights to parameter lists in the web server are defined or changed by the "Administrator" user.
- Administrator

Access rights	The "Administrator" user has full access to the converter data displayed in the web server.
Password	To access the converter, an administrator password must be assigned.

- SINAMICS

Access rights	The "SINAMICS" user has restricted access rights in the default settings of the web server.
Password	As default, a password is not assigned for "SINAMICS" users. To avoid access by unauthorized persons, we recommend that a password is assigned.

The access rights for the "Administrator" and "SINAMICS" users are assigned as follows in the default settings:

Display areas and functions		Administrator		SINAMICS	
		W/E	R	W/E	R
Start page	Password input	x		x	
Diagnostics	Drive objects and components	x		x	
	Messages > Search and filter	x		x	
	Messages > Acknowledge faults	x		x	
	Diagnostics buffer > Search and filter	x		x	
	Communication	x		x	
	Trace files	x		x	
Parameter	Create list	x		x	
	List properties > Access rights > Read parameter values	x		x [1]	
	List properties > Access rights > Change parameter values ... • ... Add parameters • ... Delete parameters • ... Change parameter values	x			x [2]
	List properties > Access rights > Change list • ... Enter / change list names • ... Delete list	x		x [1]	
	List properties > Change position of list	x		x	
Backup and restore	Back up parameters	x [3]			
	Restore parameters from file	x [3]			
	Restoring the factory setting	x [3]			
System	Settings > User accounts	x [3]			
	Settings > Configure IP connections	x [3]			
	Apply for	x			x
	Firmware update	x [3]			
Save changes (RAM to ROM)		x		x	
Call Support			x		x

W/E = Write/Edit, R = Read

[1] The parameter lists generated by user "SINAMICS" are automatically assigned access rights "Read parameter values" and "Change list". The automatically assigned access rights can be extended or restricted by the "Administrator" user. The "Administrator" user can assign the access right "Change parameter values" to a parameter list created by the "SINAMICS" user and at the same time deactivate the automatically assigned access right "Change list". As a consequence, a "SINAMICS" user can change individual values in the corresponding parameter list; however, he cannot add additional parameters to the list or delete parameters that have already been added.

[2] The function and the associated operating options are displayed for both users. However, the access rights for the function can only be assigned by user "Administrator".

[3] The function and the associated operating options are not displayed for the "SINAMICS" user and are solely reserved for the "Administrator" user.

The settings of the write and know-how protection also apply to the drive parameters and configuration when accessing the web server.

Supported browsers

Access to the web server is possible with the following Internet browsers:

Commissioning device	Operating system	Supported browsers
PG/PC	Windows (as of Version 7)[1]	• Microsoft Internet Explorer (Version 11) • Microsoft Edge (Version 14) • Mozilla Firefox (Version 62) • Google Chrome (Version 69) [2]
Tablet, Smartphone	Apple iOS (from Version 12.0)	• Google Chrome (Version 69) • Safari (Version 12.0)
	Android (from Version 4.4.4)	• Google Chrome (Version 69)

[1] We recommend the use of Windows 10, Version 1803, from April 2018 or later.

[2] We recommend the use of Google Chrome in the supported version 69.

Reloading pages

If the web server does not respond, or if buttons are inactive or are not labeled, although the converter is not fully utilized with internal calculations, load the web server pages again as follows:

- With the PG/PC via <F5>
- With the smartphone or tablet via ↻

Write and know-how protection

Write or know-how protection that has been set is also active for access via the web server.

The set protective measure cannot be configured or deactivated in the web server.

If know-how protection is set, then no values are displayed in the parameter list of the web server; instead, a note referring to the fact that know-how protection is activated.

Dialog screen forms in the web server

You make most of the important converter settings in the dialog screen forms of the web server.
The web pages are structured as follows:

① Navigation bar

② Status bar

- Top: Device designation, drop-down list for the language selection and to log out, display of the security level
- Bottom: Name of the converter (if entered), status of the converter, fault and warning messages

③ Main window (depending on navigation)

Figure 9-11 Example of a dialog screen

Change parameter values

The parameters displayed in the web server are subdivided into adjustable parameters (p...) and display parameters (r...). The parameters are shown in the same way in parameter lists and dialog screen forms.

Adjustable parameters

You change the parameter values for adjustable parameters in the parameter lists and dialog screen forms by means of input fields ② or drop-down lists ③.

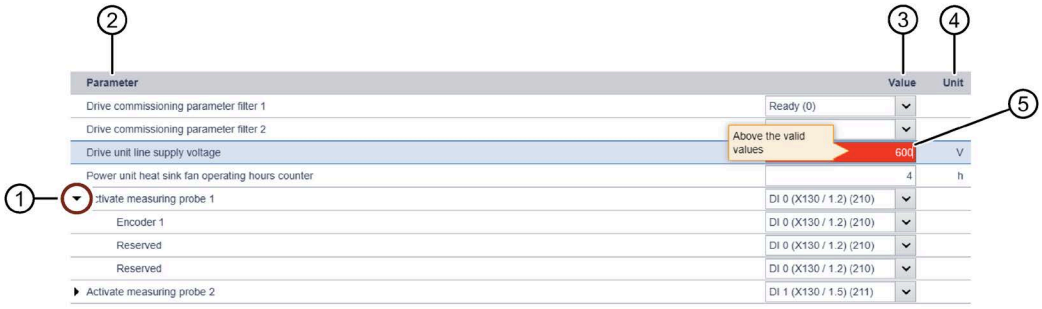

① Parameter (opened)
② "Parameter" column
③ "Value" column (values can be changed via drop-down lists or input fields.)
④ "Unit" column
⑤ Input field (invalid values are displayed with red background)

Figure 9-12 Example: Display of adjustable parameters

Input of invalid values

The web server responds to the input of invalid values in the following ways:

- If the input of an invalid value is confirmed with "Enter", a corresponding message is shown (e.g. "Value invalid") and the value is automatically set to the previously set value.

  The invalid value is not applied.

- If the input of an invalid value is confirmed with "Enter", the value is automatically set to the default value. If the previously set value differs from the default value, the previously set value is overwritten.

  The invalid value is not applied.

Display parameters

Display parameters are for information purposes only and cannot be changed.

Administrator password

For the first login to the web server, the assignment of an administrator password is mandatory.

When you have logged on successfully, you will receive advanced access to all web server functions as "Administrator" user.

Proceed as follows to assign an administrator password:

1. Switch the converter on.
2. Connect the commissioning device (PG/PC, tablet or smartphone) to service interface X127 on the converter using a LAN cable.

Note

Observe time window

Once you have connected the commissioning device with service interface X127 at the converter, assign a password within 10 minutes.

If a password is not assigned within this time window, the display automatically switches to the login screen of the web server. To redisplay dialog "Define administrator", proceed as follows:

- Switch the converter off and on again.

  OR
- Withdraw the LAN cable from service interface X127, and then reinsert it into the service interface.

3. Open the browser in your commissioning device.
4. Call the web server using the converter IP address (e.g. 169.254.11.22).

   If you have not assigned a password, then the following dialog is displayed.

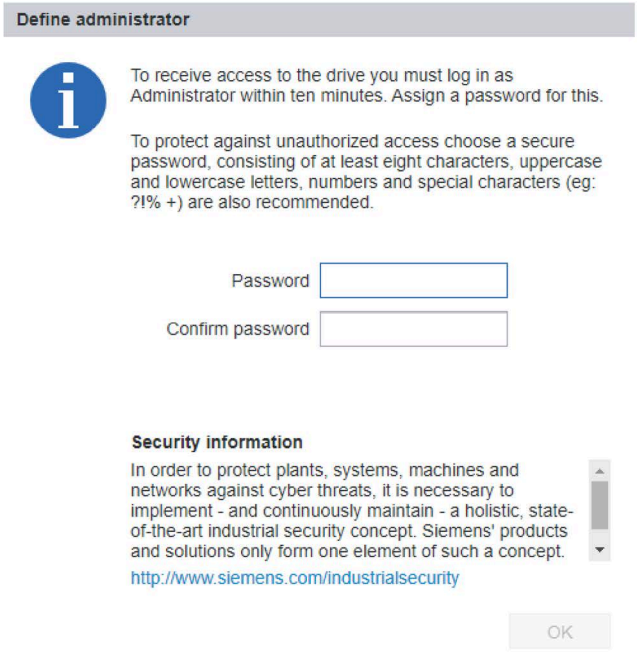

5. Enter an administrator password in the "Password" field.

Note

Secure passwords

To protect against unauthorized access, by a hacker, for example, select a secure password that comprises:

- At least 8 characters
- Uppercase and lowercase letters
- Numbers and special characters (e.g.: ?!%+ ...)

It is not permissible that the password is used elsewhere.

Note

Checking passwords

When passwords are entered, the converter only checks the password length. A check is not made for special characters or uppercase/lowercase letters!

6. Repeat the password in the "Confirm password" field.

   If the input is not identical in both fields, the "OK" button is not enabled.

7. Confirm the password that you entered with "OK".

   The display changes to the login page of the web server.

8. Log in using the administrator password.
9. Remember the password or store it in a secure place that cannot be accessed by unauthorized persons.

User-defined Web pages

You can extend the standard Web pages for the Web server using some self-created Web pages. The SIEMENS Industry Online Support contains detailed information on:

- SINAMICS S120: Creating user-defined web pages (https://support.industry.siemens.com/cs/ww/en/view/68691599)
- SINAMICS S120: User-defined sample pages (https://support.industry.siemens.com/cs/ww/en/view/78388880)

9.3.24.2 Starting the web server

In order to be able to work with the web server, you must be logged in as "SINAMICS" or "Administrator" user.

You must be logged in as "Administrator" to perform commissioning tasks.

Precondition

- The web server is already active in the factory settings.
- A functional commissioned drive project.
- PG/PC is connected to the Control Unit (to the target device).

Starting the web server

1. Enter the IP address of the SINAMICS drive in the address line of the browser (e.g. http://169.254.11.22).
   Confirm with <Return>.
   The login page of the web server is displayed in the browser.
2. Enter the name of the user ("Administrator" or "SINAMICS") in the "User name" field.
3. Then enter the user password.
   If you have still not assigned a password for user "SINAMICS", you can skip entering the password.
   In the factory setting, only user "SINAMICS" is enabled, and no password has been assigned.
4. Make sure that you have entered the user name and password correctly.
5. Click "Login".

You are logged into the web server.

Layout of the start page

After you have logged in, the web server will display the following start page:

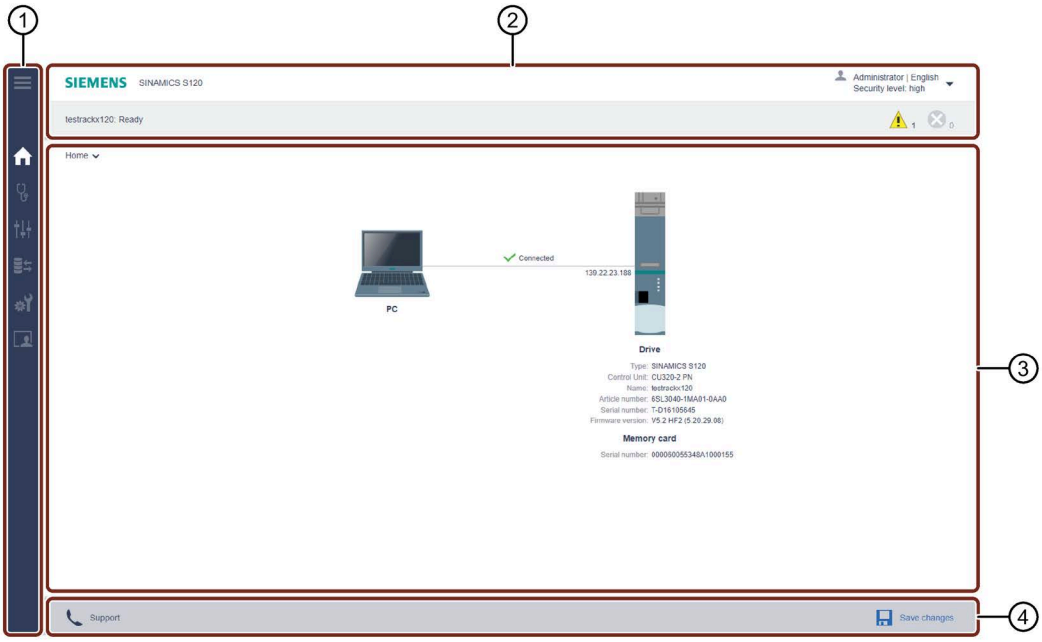

① Navigation bar

② Status bar

- Top: Device designation, drop-down list for logout and language selection, display of the security level
- Bottom: Name of the converter (if entered), status of the converter, fault and warning messages

③ Main window (depending on navigation)

④ Action bar

- Support information
- Save changes retentively (RAM to ROM)

Figure 9-13 Structure of the web server

Navigation

The web server provides the following options for navigating:

- Multi-level navigation bar:

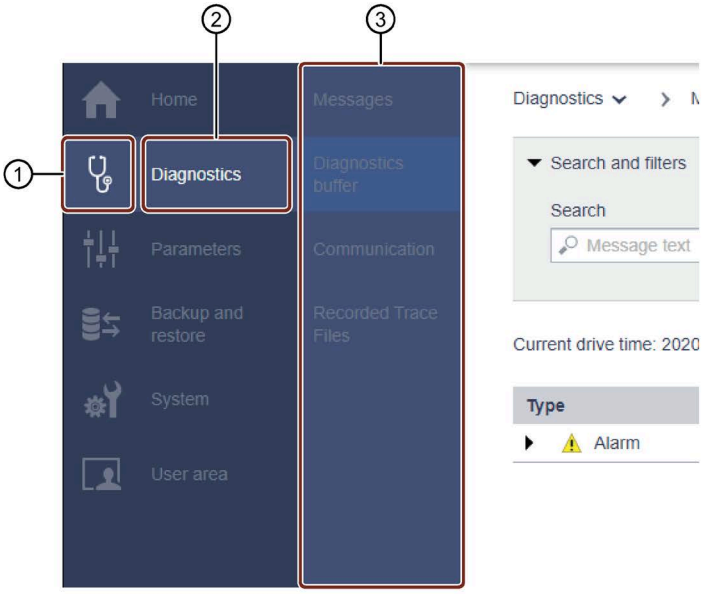

① Main menu as icon
② Main menu in text format
③ Submenus of the active main menu

- Via drop-down lists:

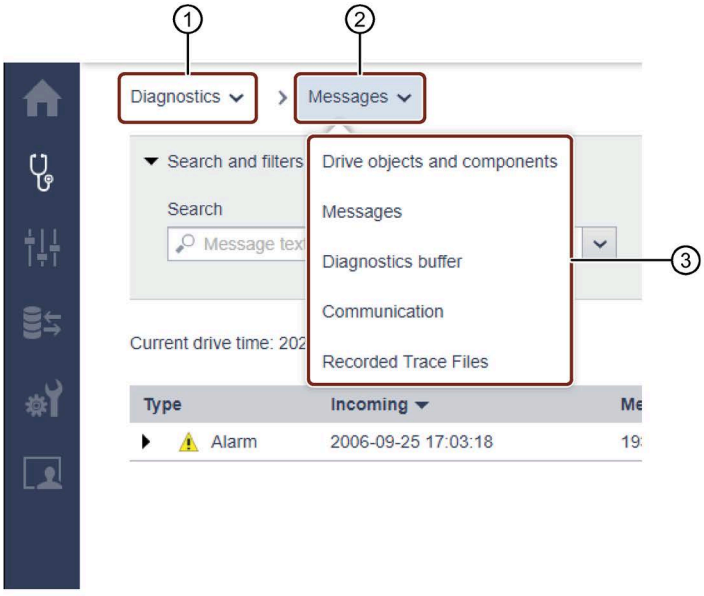

① Main menu in text format
② Submenu in text format
③ Submenu of the active submenu

For navigation on mobile devices, the screen forms can also be called in the active view of the web server via drop-down lists ① / ②.

Call support information

You call the support addresses for the SINAMICS drive via the action bar of the web server.

Click "Support" in the action bar of the web server.

The following information is shown:

Figure 9-14 Support addresses (example)

You can use the links to open or copy the required support addresses.

Click "OK" to close the dialog.

Saving settings retentively

Changed settings are saved in the volatile memory of the converter, and retained when the web server is closed.

The settings are lost when the drive is switched off. Therefore, save the changes retentively on a regular basis (also known as "RAM to ROM"). You can save the changed settings and optimization results both for each individual commissioning step and after commissioning is complete.

Proceed as follows to save changed settings retentively:

1. Click "Save changes" in the footer of the web server .
   A save dialog box is displayed.
2. Click "Save". The settings are saved retentively.

User logout

Proceed as follows to log out of the web server:

1. Click the user symbol in the status bar of the web server.
2. Click on "Log out".
   If you have changed the settings, a save prompt appears.
3. If you wish to retentively save the settings, click on "Save settings".
   The settings are saved retentively and you are logged out of the web server.

   OR
4. If you want to discard the settings, click "Log out without saving". The settings are discarded and you are logged out of the web server.

Automatic logout

If you do not perform any actions in the web server, you are automatically logged out after 10 minutes.

Settings made are not lost as a result of automatic logout. You must log in again to be able to access the web server.

Proceed as follows to save settings made retentively after automatic logout:

1. Log in to the web server.
2. Click on "Save changes" .
   An appropriate dialog is displayed.
3. Click "Save". The settings are saved retentively.

9.3.24.3 Web server configuration

Setting or changing user accounts

The "SINAMICS" and "Administrator" user roles have been predefined and cannot be changed.

Settings

The following settings are available for the user roles:

User role	Setting	Note
Administrator	Change password	The user cannot be disabled in the web server.
SINAMICS	Enable/lock user	The user is enabled by default.
	Assign password	The user must be enabled.
	Change/delete password	–

Requirements for secure passwords

To protect against unauthorized access, by an attacker, for example, generate a secure password that consists of:

- At least 8 characters
- Uppercase and lowercase letters
- Numbers and special characters (e. g. ?!%+ etc.)
- Different passwords for different user roles

Checking the password

The length of the password is checked by the converter. There is no check for special characters or upper and lower case letters.

Remember the passwords or store the passwords in a safe place that cannot be accessed by unauthorized persons.

Assigning the password for the "SINAMICS" user

Before you assign the password for the "SINAMICS" user, the user must be enabled.

Procedure

To assign the password for the "SINAMICS" user, proceed as follows:

1. Select "System > Settings" in the navigation.
2. Select the "User Accounts" tab.
3. For the "SINAMICS" user, click on "Assign password...".

   A corresponding dialog opens.
4. Enter the password as requested in the dialog.
5. Click "Assign" to complete the operation.

   If the entered parameters match, the dialog is closed.
6. To save the settings retentively, click .

Changing the password for the "SINAMICS" user

To change the password for the "SINAMICS" user, proceed as follows:

1. Select "System > Settings" in the navigation.
2. Select the "User Accounts" tab.
3. Click "Change password..." for the "SINAMICS" user.
4. Enter the passwords as requested in the dialog.
5. Click "Change" to complete the operation.

   If the entered parameters match, the dialog is closed.
6. To save the settings retentively, click .

Deleting the password for the "SINAMICS" user

Proceed as follows to delete the "SINAMICS" user:

1. Select "System > Settings" in the navigation.
2. Select the "User Accounts" tab.
3. Click "Delete password..." for the "SINAMICS" user.
4. Enter the current password as requested in the dialog.
5. Click "Delete" to complete the operation.

   If the password was entered correctly, the dialog is closed.
6. To save the settings retentively, click .

9.3.24.4 Additional information

A detailed description of the complete principle of operation and handling the web server is included in the "Function Manual SINAMICS S120 Drive Functions". This manual is available as additional documentation on the customer DVD supplied with the device.

9.3.25 Tolerant encoder monitoring

9.3.25.1 General information

The tolerant encoder monitoring offers the following options regarding evaluating encoder signals:

- Encoder track monitoring (Page 624)
- Zero mark tolerance (Page 625) (also for other sensor modules)
- Freezing the actual speed for dn/dt errors (Page 625)
- Adjustable hardware filter (Page 626)
- Edge evaluation of the zero mark (Page 627)
- Signal edge evaluation (1x, 4x) (Page 628)
- Setting the measuring time to evaluate speed "0" (Page 628)
- Sliding averaging of the speed actual value (Page 629)
- Rotor position adaptation (Page 629)
- Pulse number correction for faults (Page 630)
- "Tolerance band pulse number" monitoring (Page 631)

These additional functions make it possible to improve the evaluation of the motor encoder signals. This may be necessary if in particular cases incorrect encoder signals can occur or special properties of the signals are to be compensated.

Some of these supplementary functions can be combined with one another.

Terminology

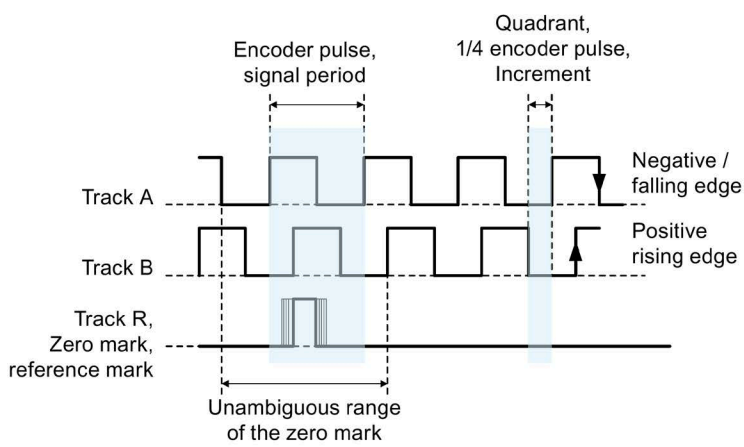

Figure 9-15 Terminology

Commissioning

The tolerant encoder monitoring is commissioned using parameters p0437 and r0459.

r0458.12 = 1 indicates whether the hardware supports the expanded encoder properties.

Note

Commissioning the encoder monitoring

The tolerant encoder monitoring functions can only be parameterized when the encoder is commissioned (p0010 = 4). The encoder monitoring parameters cannot be changed while the drive is running!

The functions can only be parameterized using the expert list of STARTER.

The functions described in the following are applicable for SMC30 encoder evaluation modules.

9.3.25.2 Encoder track monitoring

For squarewave encoders with push-pull signals, this function monitors encoder tracks A/B ↔ -A/B, as well as R ↔ -R. The encoder track monitoring monitors the most important properties of the signals (amplitude, offset, phase position).

Commissioning

The following parameters must be set as precondition for track monitoring:

- p0404.3 = 1 switches to the squarewave encoder
- p0405.0 = 1 sets the signal to bipolar

The track monitoring is activated with p0405.2 = 1.

If you selected your encoder from the list of parameter p0400, then the values above are pre-selected and cannot be changed (also refer to the information on p0400 in the List Manual).

Deactivating track monitoring

With activated encoder track monitoring, the function can be deactivated by setting p0437.26 = 1.

Evaluating messages

All of the track monitoring functions can be individually evaluated. You can use both HTL as well as TTL encoders.

If a fault is detected, fault F3x117 [1]"Inversion signal A/B/R incorrect" is output. The faulted tracks are included in the fault value bit-coded.

[1] x = encoder number (x = 1, 2 or 3)

9.3.25.3 Zero mark tolerance

This function allows individual faults to be tolerated regarding the number of encoder pulses between two zero marks.

Commissioning

The "Zero mark tolerance" is activated with p0430.21 = 1.

The permissible tolerance in encoder pulses for the zero mark distance is set using p4680.

Principle of operation

The function runs as follows:

1. The "zero mark tolerance" function starts to become effective after the 2nd zero mark has been detected.
2. After this, if the number of track pulses between two zero marks does not match the number of pulses configured in p4680 **once**, then alarms A3x400 [1)] (alarm threshold, zero mark distance error) and/or A3x401 [1)] (alarm threshold, zero mark failed) are/is output.
3. The alarms are cleared if the next zero mark is received at the correct position.
4. However, if a new zero mark position error is identified, fault F3x100 [1)] (zero mark distance error) or F3x101 [1)] (zero mark failed) is output.

[1)] x = encoder number (x = 1, 2 or 3)

9.3.25.4 Freezing the actual speed for dn/dt errors

If, for high speed changes, the dn/dt monitoring function responds, then the "Freeze speed actual value for dn/dt errors" function allows the speed actual value to be briefly "frozen" therefore equalizing the speed change.

Commissioning

The "Freeze speed actual value for dn/dt errors" function is activated with p0437.6 = 1.

Sequence

The function runs as follows:

1. If dn/dt monitoring responds (for p0492 > 0), then alarm A3x418 " Encoder x: Speed difference per sampling rate exceeded" [1] is output.
2. A frozen actual speed value limited to 2 current controller cycles is supplied.
3. The rotor position continues to integrate
4. The actual value is released again after 2 current controller cycles.

[1] x = encoder number (x = 1, 2 or 3)

9.3.25.5 Adjustable hardware filter

The adjustable hardware filter function allows an encoder signal to be filtered, therefore suppressing short interference pulses.

Commissioning

The "adjustable hardware filter" is activated with p0438 > 0.

Parameterization

- A filter time in the range from 0 to 100 µs can be entered in parameter p0438 (square wave encoder, filter time). The hardware filter only supports values 0 (no filtering), 0.04 µs, 0.64 µs, 2.56 µs, 10.24 µs and 20.48 µs

  If a value is set that does not match one of the discrete values specified above, the firmware automatically sets the next closest discrete value. The drive does not output an alarm or fault message.
- The effective filter time is displayed in parameter r0452.

Note

Suppression of zero mark alarms with active hardware filter

The zero mark alarms F3x100, F3x101 and F3x131 [1], that are already output for a zero mark with a width of 1/4 encoder pulse at half n_max speed, are suppressed when the hardware filter is activated.

[1] x = encoder number (x = 1, 2 or 3)

Effect

The influence of the filter time on the maximum possible speed can be calculated as follows:

n_max [rpm] = 60 / (p0408 x 2 x r0452)

Here, p0408 is the pulse number of the rotary encoder.

Example

Specifications:

- p0408 = 2048
- r0452 = 10.24 [µs]

n_max is then calculated as follows:

- n_max = 60 / (2048 x 2 x 10.24 x 10^{-6}) = 1430 [rpm]

With this filter time, the motor can be operated up to a maximum of 1430 rpm.

9.3.25.6 Edge evaluation of the zero mark

This function is suitable for encoders, where the zero mark ≥ 1 pulse wide. In this particular case, errors would otherwise occur as a result of the edge detection of the zero mark.

For a positive direction of rotation, the positive edge of the zero mark is evaluated and for a negative direction of rotation, the negative edge. As a consequence, for encoders where the zero mark is wider than one pulse, it is possible to parameterize them with equidistant zero marks (p0404.12 = 1), i.e. the zero mark checks (F3x100, F3x101 [1]) are activated.

Commissioning

The "Edge evaluation of the zero mark" is activated with p0437.1 = 1.

Parameterization

- Under unfavorable conditions, if the drive oscillates around the zero mark for one revolution, a zero mark error can occur with the rough order of magnitude of the zero mark width.
  This response can be avoided with the appropriate value of parameter p4686 "Zero mark minimum length". Parameter p4686 can be preassigned 3/4 of the zero mark width in order to achieve the highest possible stable behavior. Parameter p4686 must be set less than p0425 "Encoder, rotary zero mark distance".
- In order that the drive, for small inaccuracies, does not output fault F3x100 (N, A) "Encoder x: Zero mark distance error" [1], a permissible deviation of the zero mark distances can be set using p4680 "Zero mark monitoring tolerance permissible".
  This parameter makes the system less sensitive to issuing fault F3x100 [1], if p0430.22 = 0 (no rotor position adaptation) and p0437.2 = 0 (no pulse number correction for faults) are set.

[1] x = encoder number (x = 1, 2 or 3)

9.3.25.7 Signal edge evaluation (1x, 4x)

The function allows squarewave encoders with higher production tolerances or older encoders to be used. Using this function, a "steadier" speed actual value is calculated for encoders with an uneven pulse duty factor of the encoder signals. This means, that e.g. for plant/system modernizations and upgrades, existing motors together with the encoders can be used.

Commissioning

The "Signal edge evaluation" with p0437.4 and p0437.5 is set as follows:

p0437.4	p0437.5	Evaluation
0	0	4 x (factory setting)
0	1	Reserved
1	0	1 x
1	1	Reserved

Principle of operation

- For the 4x evaluation, both the rising and falling edges of a contiguous pulse pair on the A and B tracks are evaluated.
- For the 1x evaluation, only the first or the last edge of a contiguous pulse pair on the A and B tracks are evaluated.
- A 4x evaluation of the pulse encoder signals allows a minimum speed to be detected which is a factor of 4 lower than for the 1x evaluation. For incremental encoders with uneven pulse duty factor of the encoder signals or where the encoder signals are not precisely offset by 90 °, a 4x evaluation can result in an actual speed value that is somewhat "unsteady".
- The following formula defines the lowest speed where a distinction can be made to 0:

  n_{min} = 60 / (x * p0408) [rpm]

  with x = 1 or 4 (x times evaluation)

Note

Use the 1x evaluation

The reduction to 1x evaluation is only possible in conjunction with edge zero mark or without zero mark. Detection with an accuracy of one pulse is no longer possible for zero marks with "unambiguous range" or distance-coded zero marks.

9.3.25.8 Setting the measuring time to evaluate speed "0"

This function is only necessary for slow-speed drives (up to 40 rpm rated speed) in order to be able to correctly output actual speeds close to 0. For a stationary drive, this prevents that the I component of the speed controller slowly increases and the drive unnecessarily establishes a torque.

Commissioning

The desired measuring time is entered in parameter p0453. A speed actual value of "0" is output, if, within this time, no pulses are detected from the A/B track.

9.3.25.9 Sliding averaging of the speed actual value

For slow-speed drives (< 40 rpm), when using standard encoders with a pulse number of 1024, a problem is encountered due to the fact that the same number of encoder pulses is not available for every current controller clock cycle (for p0430.20 = 1: Speed calculation without extrapolation, "Incremental difference"). The different number of encoder pulses means that the speed actual value display jumps, although the encoder itself is rotating at a constant speed.

Commissioning

"Sliding averaging" is activated with p0430.20 = 0 (edge time measurement).

The number of current controller clock cycles must be entered in parameter p4685, from which the average value is generated for calculating the speed. The averaging means that individual incorrect pulses, depending on the number of specified clock cycles, are smoothed.

9.3.25.10 Rotor position adaptation

If zero marks repeatedly return (e.g. due to a dirty encoder disk), the drive adds the missing pulses to the rotor position to correct the rotor position error. If too many pulses are added (e.g. due to EMC interferences), then these will be subtracted when the zero mark is exceeded.

Commissioning

"Rotor position adaptation" is activated with p0430.22 = 1.

Principle of operation

When the rotor position adaptation is activated, the incorrect pulses on the A/B track are corrected in the rotor position for commutation. The tolerance bandwidth for the zero mark is ±30° electrical. The rate of correction is 1/4 of an encoder pulse between two zero marks; this means that sporadically missing or superfluous pulses are corrected.

Note

When the function "Commutation with zero mark" (p0404.15 = 1) is activated, then the system waits until fine synchronization has been completed before making a correction (r1992.8 = 1).

9.3.25.11 Pulse number correction for faults

Interference currents or other EMC faults can falsify encoder evaluation. However, it is possible to correct the measured signals using the zero marks.

Commissioning

"Pulse number correction for faults" is activated with p0437.2 = 1.

The permissible tolerance for the zero mark distance in encoder pulses is a set using p4680.

The limits of the tolerance window, up to which the drive corrects the pulse number, are set using p4681 and p4682.

The minimum length of the zero mark is set using p4686.

Principle of operation

- This function completely corrects encoder pulse errors up to the tolerance window (p4681, p4682) between two zero marks. The rate of correction is 1/4 encoder pulses per current controller cycle clock. As a consequence, it is possible to continually compensate for missing encoder pulses (for example, if the encoder disk is dirty). The tolerance for the deviating pulse number is set using the two parameters.

  If the deviation exceeds the tolerance window size, fault F3x131[1)] is output.

  Note

  When the function "Commutation with zero mark" (p0404.15 = 1) is activated, then the system waits until fine synchronization has been completed before making a correction (r1992.8 = 1).

  The rotor position for commutation is also corrected. Rotor position adaptation (p0430.22 = 1) does not have to be activated to do this.

  This function does not make any corrections in the speed sensing.

- The minimum length of the zero mark is set using p4686. With a factory setting of 1, it is prevented that EMC faults result in a zero mark error.

  Shorter zero marks are only suppressed when "Zero mark edge detection" is parameterized (p0437.1 = 1).

- Zero mark deviations of less than the minimum zero mark length (p4686) are not corrected.
- A permanently failed zero mark is indicated using fault F3x101 "Zero mark failed" [1)] or alarm A3x401 "Alarm threshold zero mark failed" [1)].

[1)] x = encoder number (x = 1, 2 or 3)

9.3.25.12 "Tolerance band pulse number" monitoring

This function monitors the number of encoder pulses between two zero marks. An alarm is output if the number lies outside a tolerance band that can be selected.

Commissioning

"Monitoring tolerance band, pulse number" is activated with p0437.2 = 1.

The upper and the lower limit values of the tolerance band can be set using p4683 and p4684. Within this tolerance band, the detected number of pulses is considered to be correct.

Principle of operation

- After each zero mark, it is again checked as to whether up to the next zero mark the number of pulses lies within the tolerance band.
  - If the number of pulses lies outside the tolerance band, and function "Pulse number correction for faults" (p0437.2 = 1) is parameterized, then alarm A3x422 [1)] is output for 5 seconds.
  - If one of the limits has a value of 0, then alarm A3x422[1)] is deactivated.
- Display of uncorrected encoder pulses
  For p0437.7 = 1, the number of corrected pulse errors is indicated in r4688 with the correct sign.
  For p0437.7 = 0, the number of corrected pulse errors for each zero mark distance is indicated in r4688.
  - An alarm is not output if the tolerance band limit is not reached during drift after a revolution.
  - A new measurement is performed if the zero mark is exceeded.
- Number of pulses outside the tolerance band
  - If the tolerance band is violated, then in addition to alarm A3x422 [1)], display parameter r4689 is set = 1.
    This value remains active for 100 ms, so that a control can detect several violations in quick succession one after the other even for high-speed drives.

  The message bits of parameter r4689 can be sent to a higher-level controller as process data.
- The accumulated correction value can be sent to a higher-level control (e.g.: p2051[x] = r4688). The control can then set the contents of the counter to a specific value.

[1)] x = encoder number (x = 1, 2 or 3)

Note

External encoders as leading value encoder in the drive group

The "tolerance band pulse number monitoring" also functions for external encoders, which operate in a drive line-up as leading value encoder (monitoring the position value XIST1 from a direct measuring system).

9.3.25.13 Troubleshooting, causes and remedies

Table 9- 9 Fault profiles, possible causes and remedies

Fault profile	Fault description	Remedy
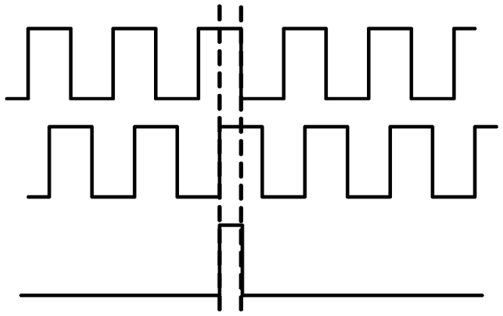	No fault	–
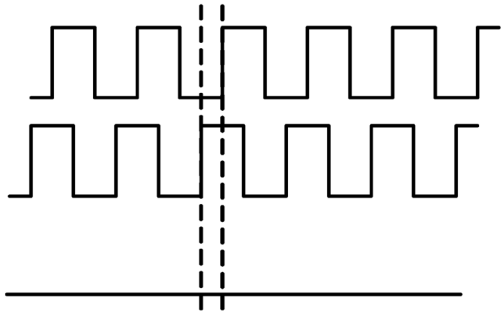	F3x101 (zero mark failed)	Check that the connection assignment is correct (A interchanged with –A or B interchanged with –B)
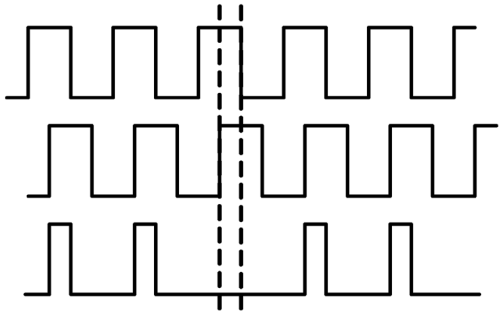	F3x100 (Zero mark distance error)	Check whether the connection assignment is correct (R interchanged with –R)
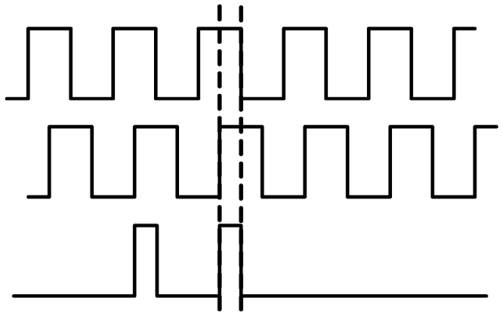	Interjected zero mark	Use zero mark tolerance

Fault profile	Fault description	Remedy
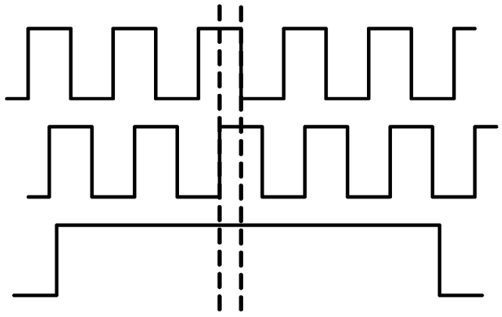	Zero mark too wide	Use edge evaluation of the zero mark
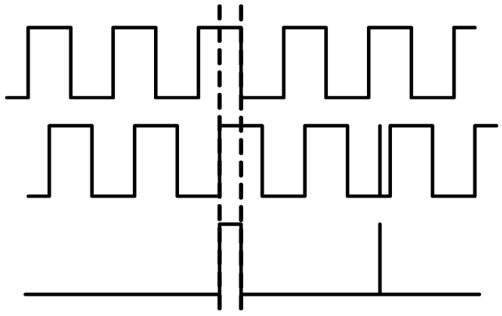	EMC faults	Use an adjustable hardware filter
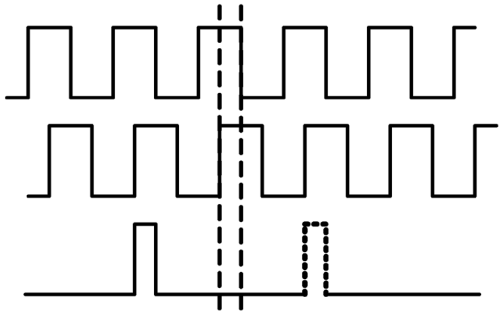	Zero mark too early/late (interference pulse or pulse loss on the A/B track)	Use rotor position adaptation or pulse number correction in the event of faults

9.3.25.14 Tolerance window and correction

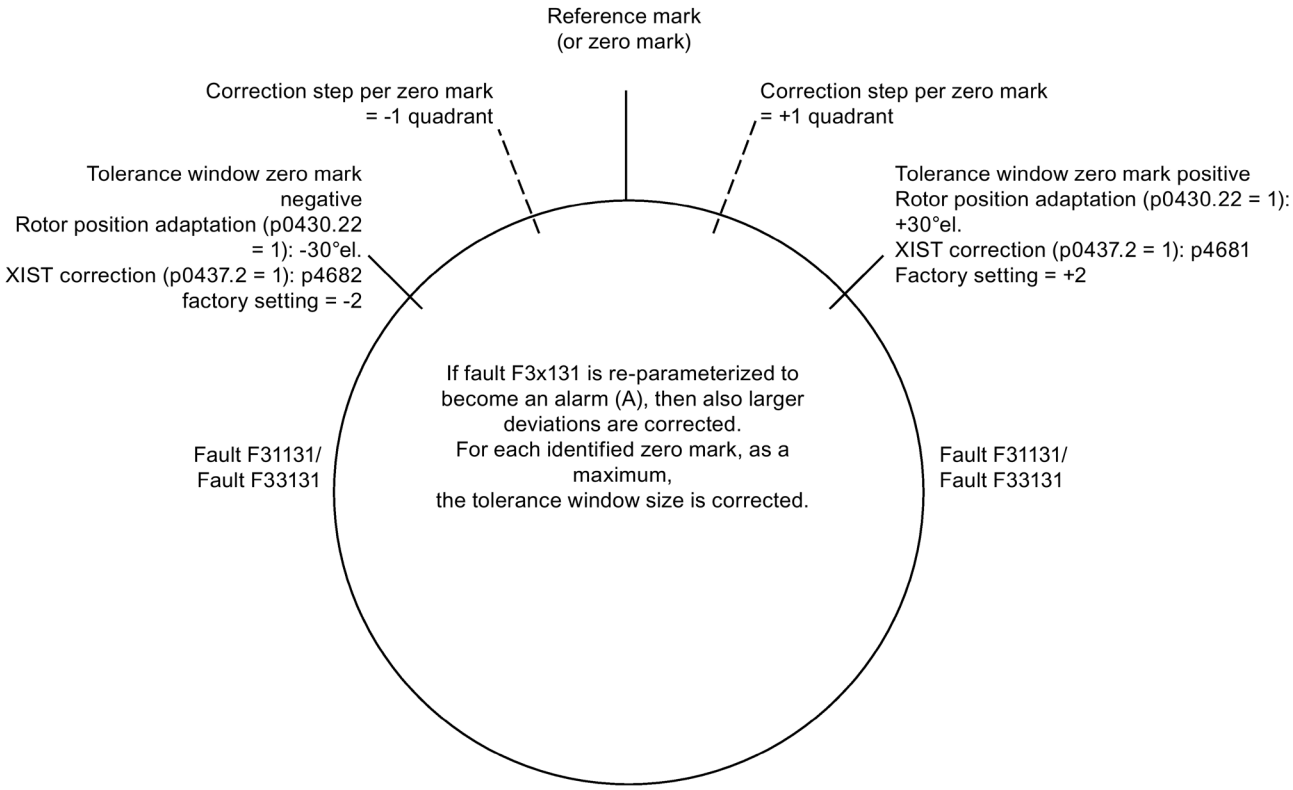

Figure 9-16 Tolerance window and correction

9.3.25.15 Dependencies

The following functions for tolerant encoder monitoring can be freely combined.

- **Encoder track monitoring**
  - p0405.2 "Track monitoring"
  - p0437.26 "Deselection, track monitoring"
  - F3x117 "Inversion signal A/B/R error"
- **Zero mark tolerance**
  - p0430.21 "Zero mark tolerance"
  - p04680 "Zero mark monitoring tolerance permissible"
  - A3x400 "Alarm threshold zero mark distance error"
  - A3x401 "Alarm threshold zero mark failed"
- **Freezing the actual speed for dn/dt errors**
  - p0437.6 "Freezing the actual speed for dn/dt errors"
  - F3x118 "Speed difference outside tolerance"
  - A3x418 "Speed difference per sampling rate exceeded"

- **Adjustable hardware filter**
  - p0438 "Square-wave encoder filter time"
  - r0452 "Square-wave encoder filter time display"
- **Edge evaluation of the zero mark**
  - p0437.1 "Zero mark edge detection"
  - p04680 "Zero mark monitoring tolerance permissible"
  - p04686 "Zero mark, minimum length"
- **Signal edge evaluation (1x, 4x)**
  - p0437.4 "Edge evaluation bit 0"
  - p0437.5 "Edge evaluation bit 1"
- **Setting the measuring time to evaluate speed "0"**
  - p0453 "Pulse evaluation zero speed measuring time"
- **Sliding mean value generation of the speed actual value**
  - p0430.20 "Speed calculation mode"
  - p04685 "Speed actual value averaging"

The following functions build upon each other from top to bottom. You can also freely combine the above-mentioned functions.

- **Rotor position adaptation**
  - p0430.22 "Rotor position adaptation"
- **Pulse number correction for faults**
  (also requires "Rotor position adaptation")
  - p0437.2 "Correction position actual value X IS 1"
  - p0437.7 "Uncorrected encoder pulses accumulate"
  - p04680 "Zero mark monitoring tolerance permissible"
  - p04681 "Zero mark monitoring tolerance window limit 1 positive"
  - p04682 "Zero mark monitoring tolerance window limit 1 negative"
  - p04686 "Zero mark, minimum length"
  - p04688 "Zero mark monitoring, number of differential pulses"
  - r04689 "Square-wave encoder diagnostics"
  - F3x131 "Deviation position incremental/absolute too high"

- **"Tolerance band pulse number" monitoring**
  (also requires "Rotor position adaptation" and "Pulse number correction for faults")
  - p0437.2 "Correction position actual value X IS 1"
  - p0437.7 "Uncorrected encoder pulses accumulate"
  - p04683 "Zero mark monitoring tolerance window alarm threshold positive"
  - p04684 "Zero mark monitoring tolerance window alarm threshold negative"
  - p04688 "Zero mark monitoring, number of differential pulses"
  - r04689 "Square-wave encoder diagnostics"
  - A3x422 "Number of pulses square-wave encoder outside tolerance band"

9.3.25.16 Overview of important parameters

Parameter

- p0404[0...n] Encoder configuration effective
- p0405[0...n] Square-wave signal encoder A/B track
- p0408[0...n] Rotary encoder pulse No.
- p0430[0...n] Sensor Module configuration
- p0437[0...n] Sensor Module extended configuration
- p0438[0...n] Square-wave encoder filter time
- r0452[0...2] Square-wave encoder filter time display
- r0458[0...2] Sensor Module properties
- r0459[0...2] Sensor Module extended properties
- p4680[0...n] Zero mark monitoring tolerance permissible
- p4681[0...n] Zero mark monitoring tolerance window limit 1 positive
- p4682[0...n] Zero mark monitoring tolerance window limit 1 negative
- p4683[0...n] Zero mark monitoring tolerance window alarm threshold positive
- p4684[0...n] Zero mark monitoring tolerance window alarm threshold negative
- p4686[0...n] Zero mark, minimum length
- r4688[0...2] CO: Zero mark monitoring, number of differential pulses
- r4689[0...2] CO: Square-wave encoder diagnostics

9.3.26 Position tracking

9.3.26.1 General information

Terminology

- Encoder range

  The encoder range is the position area that can itself represent the absolute encoder.

- Singleturn encoder

  A singleturn encoder is a rotating absolute encoder, which provides an absolute image of the position within one encoder revolution.

- Multiturn encoder

  A multiturn encoder is an absolute encoder that provides an absolute image of the position over several encoder revolutions (e.g. 4096 revolutions).

Description

Position tracking enables the load position to be reproduced when using gears. It can also be used to extend the position area.

With position tracking, an additional measuring gear can be monitored and also a load gear, if the "position control" function module (p0108.3 = 1) is active. Position tracking of the load gearbox is described in Chapter "Actual position value preparation (Page 669)".

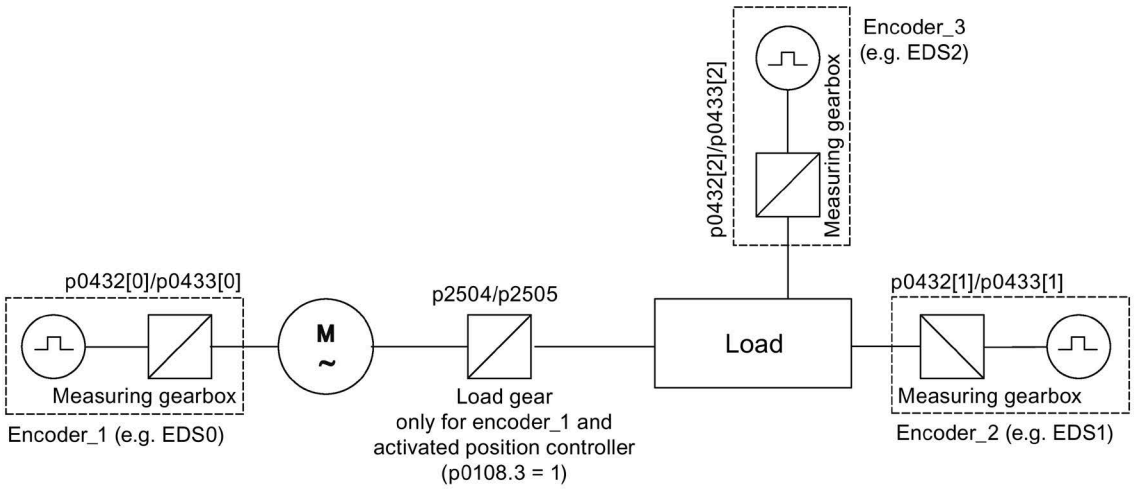

Figure 9-17 Overview of gears and encoders

The encoder position actual value in r0483 (must be requested via GnSTW.13) is limited to 2^{32} places. When position tracking (p0411.0 = 0) is deactivated, the encoder actual position value r0483 comprises the following position information:

- Encoder pulses per revolution (p0408)
- Fine resolution per revolution (p0419)
- Number of resolvable revolutions of the rotary absolute encoder (p0421), this value is fixed at "1" for singleturn encoders.

When position tracking (p0411.0 = 1) is activated, the encoder actual position value r0483 is composed as follows:

- Encoder pulses per revolution (p0408)
- Fine resolution per revolution (p0419)
- Virtual number of resolvable motor revolutions of a rotary absolute encoder (p0412)

  If the measuring gear is absent (n=1), the actual number of the stored revolutions of a rotary absolute encoder p0421 is used. The position area can be extended by increasing this value.

  If the measuring gear is available, this value equals the number of resolvable motor revolutions, which is stored in r0483.
- Gearbox ratio (p0433/p0432)

9.3.26.2 Measuring gearbox

Description

If a mechanical gear (measuring gear) is located between an endlessly rotating motor or load and the encoder and position control is to be carried out using this absolute encoder, an offset occurs (depending on the gear ratio) between the zero position of the encoder and the motor or load whenever encoder overflow occurs.

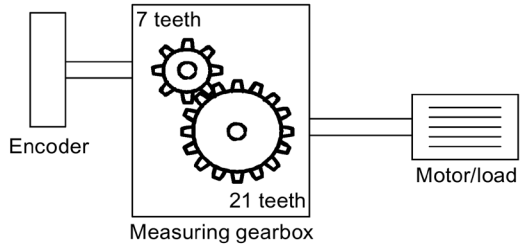

Figure 9-18 Measuring gearbox

In order to determine the position at the motor or load, in addition to the position actual value of the absolute encoder, it is also necessary to have the number of overflows of the absolute encoder.

If the power supply of the control module must be powered-down, then the number of overflows must be saved in a non-volatile memory so that after powering-up the position of the load can be uniquely and clearly determined.

Example

- Gear ratio 1:3 (motor revolutions p0433 to encoder revolutions p0432)
- Absolute encoder can count 8 encoder revolutions (p0421 = 8)

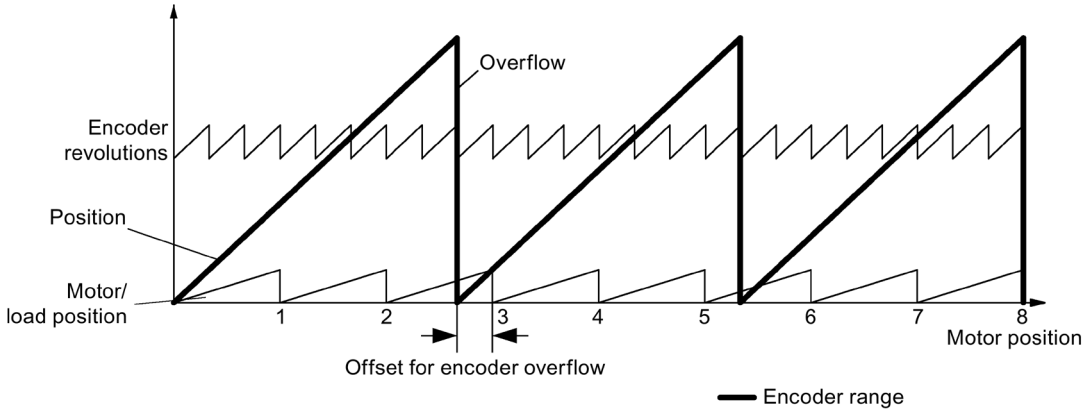

Figure 9-19 Drive with odd-numbered gearboxes without position tracking

In this case, for each encoder overflow, there is a load-side offset of 1/3 of a load revolution, after 3 encoder overflows, the motor and load zero position coincide again. The position of the load can no longer be clearly reproduced after one encoder overflow.

If position tracking is activated via p0411.0 = 1, the gear ratio (p0433/p0432) is calculated with the encoder position actual value (r0483).

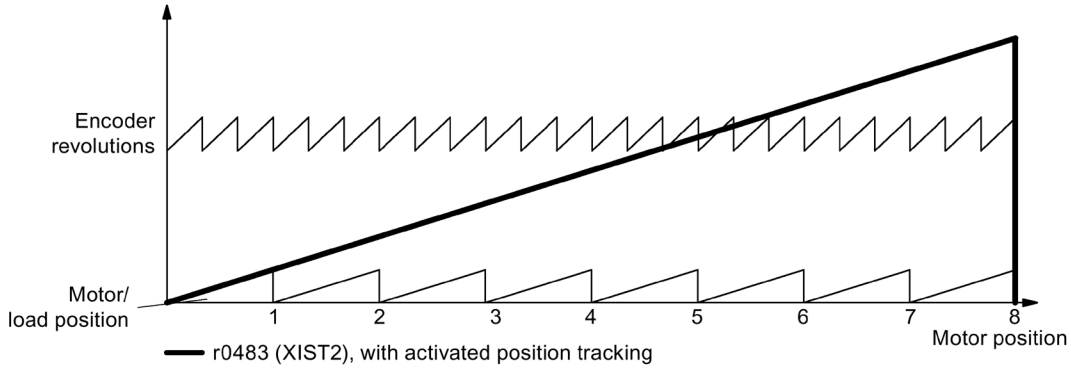

Figure 9-20 Odd-numbered gears with position tracking (p0412 = 8)

Features

- Configuration via p0411
- Virtual multiturn via p0412
- Tolerance window for monitoring the position at power ON p0413
- Input of the measuring gear via p0432 and p0433
- Display via r0483

Commissioning

The position tracking of the measuring gear can be activated in the drive wizard (STARTER) during the configuration of the drive. During the configuration there is an item for encoder parameterization. In the encoder dialog, click on the "Details" button and activate the checkbox for position tracking in the displayed dialog.

The parameters p0412 (Measuring gear, rotary absolute encoder, revolutions, virtual) and p0413 (Measuring gear, position tracking tolerance window) can only be set via the expert list.

Measuring gear configuration (p0411)

The following points can be set by configuring this parameter:

- p0411.0: Measuring gear, activate position tracking
- p0411.1: Setting the axis type (linear axis or rotary axis)

  Here, a rotary axis refers to a modulo axis (modulo offset can be activated through higher-level control or EPOS). With a linear axis, position tracking is mainly used to extend the position area (see section: Virtual multiturn encoder (p0412)).
- p0411.2: Reset measuring gear position

  Overflows can be reset with this. This is required, for example, if the encoder is rotated by more than 1/2 the encoder range while switched off.
- p0411.3: Activate measuring gear position tracking for an incremental encoder

  When position tracking is activated, for an incremental encoder only the actual position value is stored. Movement by an axis / encoder when the system is switched off is not detected! A tolerance window setting in p0413 has no effect.

Virtual multiturn encoder (p0412)

With a rotary absolute encoder (p0404.1 = 1) with activated position tracking (p0411.0 = 1), p0412 can be used to enter a virtual multiturn resolution. This enables you to generate a virtual multiturn encoder value (r0483) from a singleturn encoder. It must be possible to display the virtual encoder range via r0483.

Note

If the gear factor is not equal to 1, then p0412 always refers to the motor side. The virtual resolution, which is required for the motor, is then used here.

For rotary axes with modulo offset, the virtual multiturn resolution (p0412) is preset as p0421 and can be changed.

For linear axes, the virtual multiturn resolution (p0412) is preset as p0421 and extended by 6 bits for multiturn information (max. overflows 31 positive/negative)

If, as a result of extension of the multiturn information, the displayable area of r0483 (2^{32} bit) is exceeded, the fine resolution (p0419) must be reduced accordingly.

Tolerance window (p0413)

After switching on, the difference between the stored position and the actual position is determined and, depending on the result, the following is initiated:

- Difference within the tolerance window
  The position is reproduced based on the actual encoder value.
- Difference outside the tolerance window:
  fault F07449 is output.
- The tolerance window is preset to quarter of the encoder range and can be changed.

Note

Reproduce the position

The position can only be reproduced if, in the powered-down state, the encoder was moved through less than half of the range that it can represent. For the standard EQN1325 encoder, this is 2048 revolutions or half a revolution for single-turn encoders.

Note

Actual transformation ratio is required

The ratio stamped on the gear rating plate is often just a rounded-off value (e.g.1:7.34). If, for a rotary axis, it is not permissible to have any long-term drift, then the actual ratio of the gear teeth must be requested from the gear manufacturer.

Synchronous motors with measuring gear

Field-oriented control of synchronous motors requires a clear reference between the pole position and encoder position. This reference must also be carefully maintained when using measuring gears: This is the reason that the ratio between the pole pair number and the encoder revolutions must be an integer multiple and ≥ 1 (e.g. pole pair number 17, measuring gear 4.25, ratio = 4).

Function diagram

FP 4704 Position and temperature sensing, encoders 1 ... 3

Parameters

- p0402 Gear unit type selection
- p0411 Measuring gear configuration
- p0412 Measuring gear, absolute encoder, rotary revolutions, virtual
- p0413 Measuring gear, position tracking tolerance window
- p0421 Absolute encoder rotary multi-turn resolution
- p0432 Gear factor encoder revolutions
- p0433 Gear factor motor/load revolutions
- r0477 CO: Measuring gear, position difference
- r0485 CO: Measuring gear, raw encoder value, incremental
- r0486 CO: Measuring gear, raw encoder value, absolute

9.4 Extended functions

9.4.1 Technology controller

Description

The "technology controller" function module allows simple control functions to be implemented, e.g.:

- Level control
- Temperature control
- Dancer roll position control
- Pressure control
- Flow control
- Simple control without higher-level control
- Tension control

The technology controller features:

- Two scalable setpoints
- Scalable output signal
- Separate fixed values
- Integrated motorized potentiometer
- The output limits can be activated and deactivated via the ramp-function generator.

- The D component can be switched to the system deviation or actual value channel.
- The motorized potentiometer of the technology controller is only active when the drive pulses are enabled.

The technology controller is designed as a PID controller, whereby the differentiator can be switched to the control deviation channel or the actual value channel (factory setting). The P, I, and D components can be set separately.

A value of 0 deactivates the corresponding component. Setpoints can be specified via two connector inputs. The setpoints can be scaled via parameters p2255 and p2256.

A ramp-function generator in the setpoint channel can be used to set the setpoint ramp-up/ramp-down time via parameters p2257 and p2258. The setpoint and actual value channel each have a smoothing element. The smoothing time can be set via parameters p2261 and p2265.

The setpoints can be specified via separate fixed setpoints (p2201 to p2215), the motorized potentiometer, or via the fieldbus (e.g. PROFIBUS, PROFINET).

Pre-control can be integrated via a connector input.

The output can be scaled via parameter p2295 and the control direction reversed. It can be limited via parameters p2291 and p2292 and interconnected as required via a connector output (r2294).

The actual value can be integrated, for example, via an analog input on the TM31.

If a PID controller has to be used for control reasons, the D component is switched to the setpoint/actual value difference (p2263 = 1) unlike in the factory setting. This is always necessary when the D component is to be effective, even if the reference variable changes. The D component is only activated if p2274 > 0.

Note

Ramp-up/down time freeze

With the entry "0" sec. as power up time or ramp-down time for the ramp function generator of the technology controller, the current values of the respective ramp function generator will be frozen.

Commissioning

The "technology controller" function module can be activated by running the commissioning wizard. Parameter r0108.16 indicates whether the function module has been activated.

Example: liquid level control

The objective here is to maintain a constant level in the container.

This is carried out by means of a variable-speed pump in conjunction with a sensor for measuring the level.

The level is determined via an analog input (e.g. AI0 TM31) and sent to the technology controller. The level setpoint is defined in a fixed setpoint. The resulting controlled variable is used as the setpoint for the speed controller.

In this example, a Terminal Module (TM31) is used.

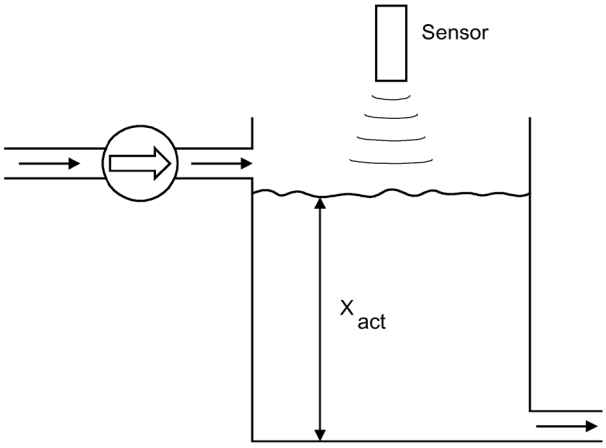

Figure 9-21 Level control: Application

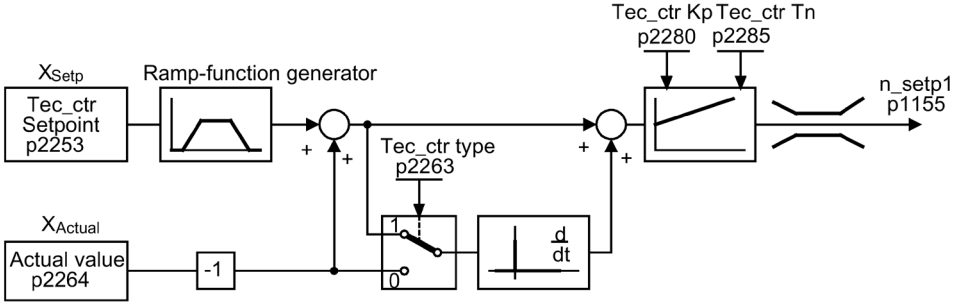

Figure 9-22 Level control: Controller structure

Function diagram

FD 7950	Technology controller – fixed values, binary selection
FP 7951	Technology controller – fixed values, direct selection
FD 7954	Technology controller – motorized potentiometer
FD 7958	Technology controller – closed-loop controller

Key control parameters

- p1155 = r2294 CI: Speed controller speed setpoint 1 [FP 3080]
- p2253 = r2224 Technology controller setpoint effective via fixed setpoint [FD 7950]
- p2263 = 1 D component in fault signal [FD 7958]
- p2264 = r4055 Actual value signal X_{actual} via AI0 of TM31 [FP 9566]
- p2280 = Kp Calculate P gain by means of optimization
- p2285 = Tn Calculate integral time by means of optimization
- p2200 = 1 Technology controller enabled

9.4.2 Bypass function

The bypass function uses digital drive outputs to activate two contactors and uses digital inputs to evaluate the contactor's feedback (e.g., via TM31). This circuit allows the motor to be operated using the converter or directly on the supply line. The contactors are activated by the converter. The feedback signals for the contactor positions have to be returned to the converter.

The bypass circuit can be implemented in two ways:

- without synchronizing the motor to the line supply
- with synchronizing the motor to the supply.

The following applies to all bypass versions:

- The bypass switch is also always shut down if one of the "OFF2" or "OFF3" control word signals is canceled (motor coasts down). When "OFF1" is withdrawn, the motor remains connected to the line supply.
- Exception:
  If necessary, the bypass switch can be interlocked by a higher-level controller such that the drive can be shut down completely (i.e. including the controller electronics) while the motor is operated on the supply.
  The protective interlocking must be implemented on the system side.
- When the drive is started up again after POWER ON, the status of the bypass contactors is evaluated. After powering up, the converter can thereby change straight into "Ready to start and bypass" status. This is only possible if the bypass is activated via a control signal, the control signal (p1266) is still present once the system has been ramped up, and the "automatic restart" function is active (p1210 = 4).
  The bypass function is automatically restarted by the restart process. To accelerate the motor to the setpoint speed or to synchronize it to the network, the pulse enable may takes place with the motor rotating. In this case, it is recommended that you activate the "Flying restart" function (p1200 = 1) to prevent high current peaks.
- Changing the converter into "Ready to start and bypass" status after powering up, is of a higher priority than switching back on automatically.

- Monitoring of the motor temperatures using temperature sensors is active while the converter is in one of two statuses "Ready to start and bypass" or "Ready for operation and bypass".
- The two motor contactors must be designed for switching under load.

Note

Information on the examples

The examples contained in the following descriptions are only basic circuits designed to explain the basic function. The dimensions of specific circuit configurations (contactors, protective equipment) must be calculated for specific systems.

NOTICE

Device damage as a result of incorrect phase sequence

The target frequency r3804 is specified as an absolute value. It does not contain information about the direction of the rotating field (phase sequence)!

If the phase sequence of the line voltage, which the system must synchronize with, does not match the motor voltage phase sequence then this results in incorrect synchronization. In the worst-case scenario, this can mechanically damage the plant or system.

- Ensure that the line voltage phase sequence matches that of the motor voltage. You can correct the phase sequence as follows:
  - Interchange the two feeder cables at the converter output or at the line contactor.
  - Correct the phase sequence of the motor or converter output voltage using p1820 or p1821.

Precondition

The bypass function is only possible for encoderless closed-loop speed control (p1300 = 20) or V/f control (p1300 = 0...19) and when an induction motor is used.

Establishing the bypass function

The bypass function is part of the "technology controller" function module that can be activated by running the commissioning Wizard. Parameter r0108.16 indicates whether the function module has been activated.

9.4.2.1 Bypass with synchronizer with degree of overlapping (p1260 = 1)

Description

The "Bypass with synchronization with degree of overlapping" is used for drives with a low moment of inertia. These are drives for which their speed would sink very fast when the K1 contactor opens.

When "bypass with synchronization with overlap (p1260 = 1)" is activated, the motor is transferred, synchronized to the line supply and is also retrieved again. During the changeover, both contactors K1 and K2 are closed at the same time for a period (phase lock synchronization).

This bypass type requires a VSM10 Voltage Sensing Module that measures the line voltage for the drive to be synchronized.

A reactor is used to decouple the converter from the line supply; the uk value for the reactor is 10 % (±2).

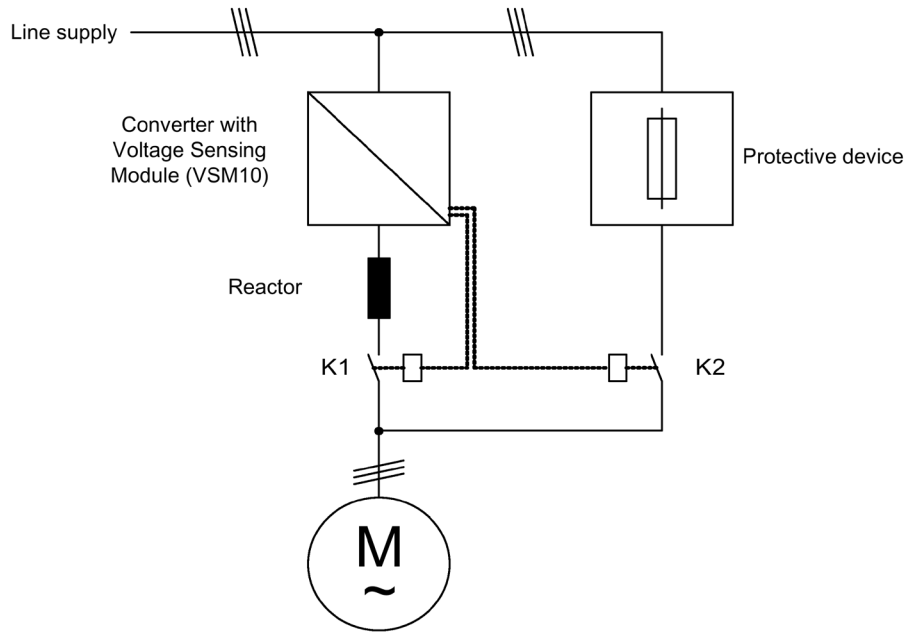

Figure 9-23 Typical circuit diagram for bypass with synchronizer with degree of overlapping

Note

As a result of the overlap, when synchronizing back to the converter, the DC link voltage can increase; in the worst case scenario this can result in a fault trip. It is possible to activate an overvoltage protection function, which, when a Vdc max threshold (r1242) is reached, the pulses are inhibited; as a consequence, the DC link voltage stops increasing. When the pulses are inhibited, the motor coasts down, which is why it must be restarted on the fly. As a consequence, overvoltage protection is only active if the "Flying restart" function was activated (p1200 = 1).

Activation

The synchronized bypass with overlap (p1260 = 1) function can only be activated using a control signal. It cannot be activated using a speed threshold.

Parameterization

Once the bypass with synchronizer with degree of overlapping (p1260 = 1) function has been activated, the following parameters must be set:

Table 9- 10 Parameter settings for bypass function with synchronizer with degree of overlapping

Parameters	Description
r1261.0	Signal "Command switch motor - power unit" (contactor K1)
r1261.1	Signal "Command switch motor - line" (contactor K2)
p1266 =	Control signal setting
p1269[0] =	Signal source for contactor K1 feedback
p1269[1] =	Signal source for contactor K2 feedback
p3800 = 1	Synchronization is activated
p3802 = r1261.2	Synchronizer activation is triggered by the bypass function.

Transfer process

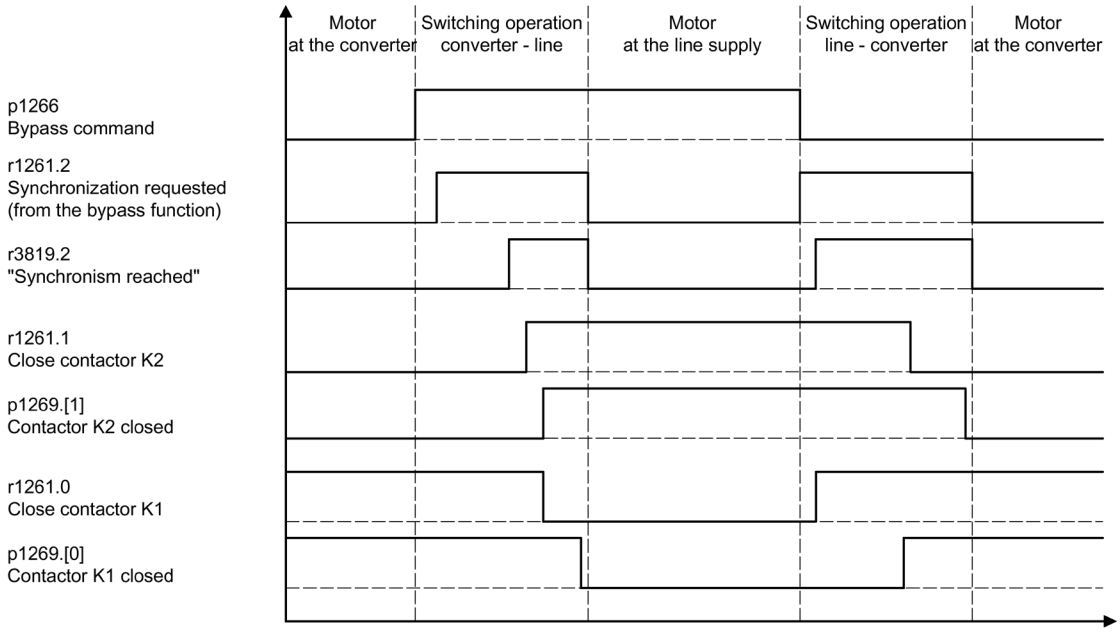

Figure 9-24 Signal diagram, bypass with synchronization with overlap

Transfer of motor to the line supply
(contactors K1 and K2 are controlled by the converter):

- The initial state is as follows: Contactor K1 is closed, contactor K2 is open and the motor is fed from the converter.
- The control bit "bypass command" (p1266) is set (e.g. by the higher-level automation).
- The bypass function sets the control word bit "synchronizing" (r1261.2).
- Since the bit is set while the converter is running, the "Transfer motor to line supply" synchronization process is started.
- The synchronizing algorithm signals once the motor has been synchronized to the line frequency, line voltage and phase position (r3819.2).
- The bypass mechanism evaluates this signal and closes contactor K2 (r1261.1 = 1). The signal is evaluated internally - BICO wiring is not required.
- After contactor K2 has signaled back the "closed" state (r1269[1] = 1), contactor K1 is opened and the drive inhibits the pulses. The converter is in "Ready for operation and bypass" state.
- If the On command is cancelled in this phase, the converter will change to "Ready to start and bypass" state. If the appropriate contactors are being used, the converter will be isolated from the line supply and the DC link discharged.

To transfer the motor back from the line supply, the sequence is simply reversed: At the start of the process, contactor K2 is closed and contactor K1 is open.

- The "Bypass command" control bit is canceled (e.g. by the higher-level automation).
- The bypass function sets the control word bit "synchronizing".
- The pulses are enabled. Since "synchronizing" is set before "pulse enable", the converter interprets this as a command to retrieve the motor from the line supply.
- The synchronizing algorithm signals once the converter has been synchronized to the line frequency, line voltage and line phase.
- The bypass mechanism evaluates this signal and closes contactor K1. The signal is evaluated internally - BICO wiring is not required.
- Once contactor K1 has reported "closed" state, contactor K2 is opened and the motor returns to operation on the converter.

9.4.2.2 Bypass with synchronizer without degree of overlapping (p1260 = 2)

Description

When "bypass with synchronization without overlap (p1260 = 2)" is activated, contactor K2 is only closed when contactor K1 has opened (anticipatory type synchronization). During this time, the motor is not connected to a line supply so that its speed is determined by the load and the friction. Consequently, this bypass type is suitable for drives with large moment of inertia (see following note).

Synchronization setpoint p3809 is used to correct a phase rotation in the signal sensing of the voltage actual values (p3809 = -180 ° ... 179.90 °). Furthermore, using this parameter, the setpoint angle of the motor voltage can be set (in a range up to a maximum of 20 °el, see p3813) to compensate for friction or load-dependent speed decrease during the bypass switchover.
The phase position of the motor voltage before synchronization can be set using p3809 to enable an "advance start" before the line supply to which synchronization should be performed. As a result of the motor braking in the short time in which both contactors are open, when closing contactor K2, a phase and frequency difference of approximately zero must now be obtained.
If the angular difference is > 20 °el during switchover, the current surges that cannot be regarded as negligible would have to be expected. For this reason, synchronism is only reached if the angular difference is ≤ p3813 (maximum of 20 °el). Compensating a speed decrease using p3809 is only practical if the motor is evenly loaded during the switchover period.
For instance, for conveyor belts, the load can also change during the bypass sequence, depending on the process environment. If, during the switchover process, the angular difference is more than 20 °el or if the load for each bypass operation differs, then the "Bypass with synchronization with overlap (p1260 = 1)" mode must be used.

This bypass type requires a VSM10 Voltage Sensing Module that measures the line voltage for the drive to be synchronized.

For the function to run correctly, the moment of inertia of the drive and the load must be sufficiently high.

Note

Sufficiently high moment of inertia

A sufficiently high moment of inertia is characterized by a change in the motor speed when contactors K1 and K2 are opened, which is approximately equal to the rated slip. Further, it must be ensured that at the switchover instant, the motor is not significantly braked as a result of external effects (e.g. friction).

It is no longer necessary to use the de-coupling reactor after having determined the synchronizing setpoint (p3809) in the manner described above.

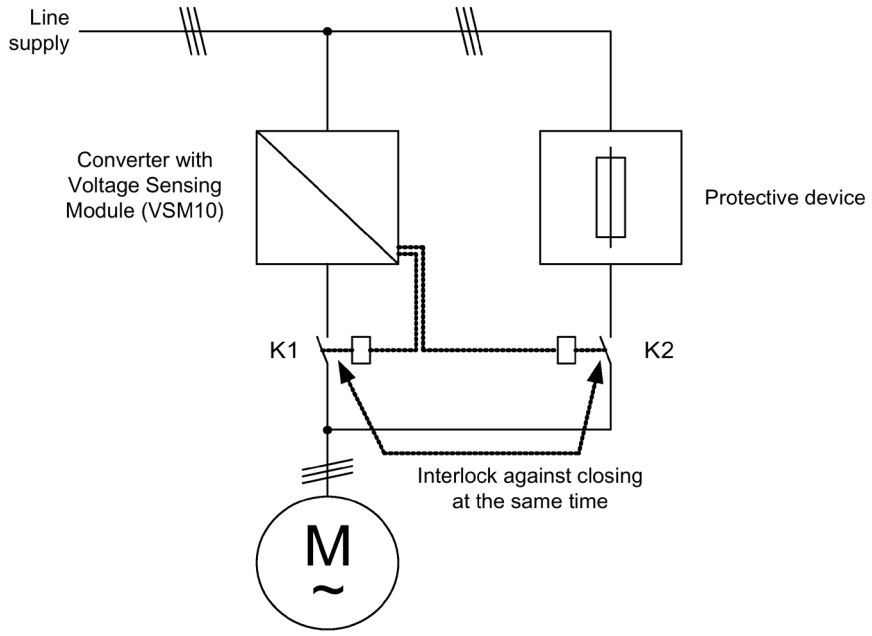

Figure 9-25 Example circuit for bypass with synchronizer without degree of overlapping

Activation

The synchronized bypass without overlap (p1260 = 2) function can only be activated using a control signal. It cannot be activated using a speed threshold.

Parameterization

Once the synchronized bypass without overlap (p1260 = 2) function has been activated, the following parameters must be set.

Table 9- 11 Parameter settings for bypass function with synchronizer without degree of overlapping

Parameters	Description
r1261.0	Signal "Command switch motor - power unit" (contactor K1)
r1261.1	Signal "Command switch motor - line" (contactor K2)
p1266 =	Control signal setting
p1269[0] =	Signal source for contactor K1 feedback
p1269[1] =	Signal source for contactor K2 feedback
p3800 = 1	Synchronization is activated
p3802 = r1261.2	Synchronization activation is triggered by the bypass function
p3809 =	Setting the phase setpoint for synchronizing the drive to the line supply

9.4.2.3 Bypass without synchronizer (p1260 = 3)

Description

When the motor is transferred to the line supply, contactor K1 is opened (after the drive converter pulses have been inhibited); the system then waits for the motor de-excitation time and then contactor K2 is closed so that the motor is directly connected to the line supply.
If the motor is connected to the supply in a non-synchronized manner, an equalizing current flows when the motor is switched in, and this must be taken into account when designing the protective equipment (see diagram "Circuit example for bypass without synchronization"). Consequently, this bypass type is suitable only for low power drives.

When the motor is being transferred from the supply by the converter, initially contactor K2 is opened and after the excitation time, contactor K1 is closed. The converter then captures the rotating motor and the motor is operated on the converter.

This bypass type does not require a VSM10 Voltage Sensing Module.

Contactor K2 must be designed for switching under load.

Contactors K1 and K2 must be interlocked against closing at the same time.

The "flying restart" function must be activated (p1200 = 1).

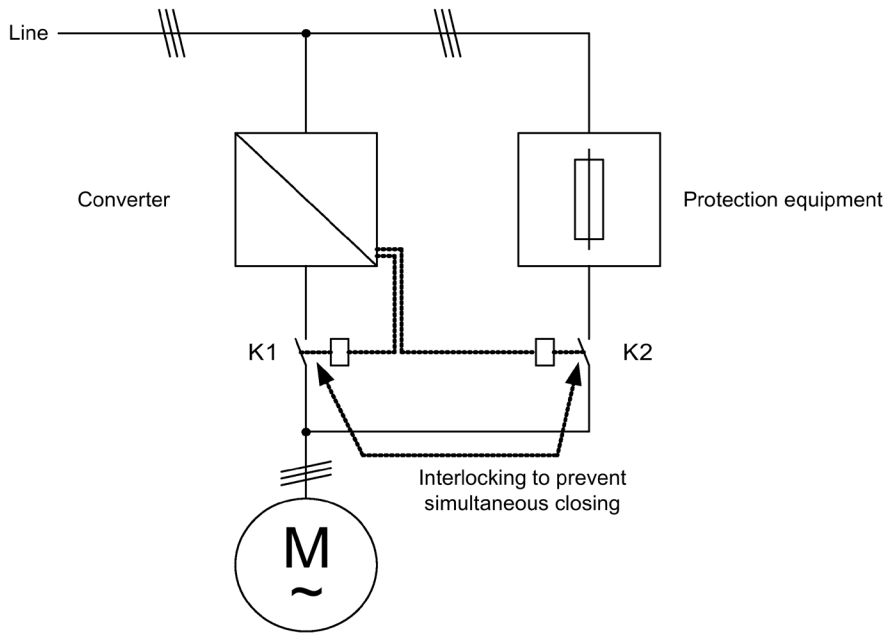

Figure 9-26 Example circuit for bypass without synchronization

Activation

The bypass without synchronization (p1260 = 3) can be triggered using the following signals (p1267):

- Bypass using control signal (p1267.0 = 1):
  The bypass is triggered using a digital signal (p1266) (e.g., from a higher-level automation

system). If the digital signal is canceled, a swichover to converter operations is triggered once the debypass delay time (p1263) has expired.

- Bypass at a specific speed threshold (p1267.1 = 1):
  Once a certain speed is reached, the system switches to bypass (i.e., the drive is used as a starting drive). The bypass cannot be connected until the speed setpoint is greater than the bypass speed threshold (p1265).
  The system reverts to converter mode when the setpoint (at the input of the ramp-function generator, r1119) falls below the bypass speed threshold (p1265). The setpoint > comparison value condition prevents the bypass from being reactivated straight away if the actual speed is still above the bypass speed threshold (p1265) after switching back to converter operations.

The bypass time, debypass time, bypass speed variables and the command source for switching over are set using parameters.

Parameterization

Once the bypass without synchronization (p1260 = 3) function has been activated, the following parameters must be set.

Table 9- 12 Parameter settings for bypass function with synchronizer without degree of overlapping

Parameters	Description
r1261.0	Signal "Command switch motor - power unit" (contactor K1)
r1261.1	Signal "Command switch motor - line" (contactor K2)
p1262 =	Bypass dead time setting The total time for switching to line operation or switching back to converter operation is obtained from the sum of p1262 and the monitoring time of the switch being used (p1274[x]).
p1263 =	Setting the debypass delay time The delay time corresponds to the time between the reset of the bypass command and the status change from 1 to 0 in p1261.1 (command, switch motor - line supply).
p1264 =	Setting the bypass delay time The delay time corresponds to the time between setting the bypass command and the status change from 1 to 0 in p1261.0 (command, switch motor - power unit).
p1265 =	Speed threshold setting when p1267.1 = 1
p1266 =	Control signal setting when p1267.0 = 1
p1267.0 = p1267.1 =	Trigger signal setting for bypass function
p1269[0] =	Signal source for contactor K1 feedback
p1269[1] =	Signal source for contactor K2 feedback
p1274[x]	Setting the monitoring time for the bypass switch, motor/drive and motor/line supply.
p3800 = 0	Synchronization is deactivated.
P1200 = 1	The "flying restart" function is always active.

9.4.2.4 Function diagram

FP 7020 Synchronization

9.4.2.5 Parameters

Bypass function

- p1200 Flying restart operating mode
- p1260 Bypass configuration
- r1261 CO/BO: Bypass control/status word
- p1262 Bypass dead time
- p1263 Debypass delay time
- p1264 Bypass delay time
- p1265 Bypass speed threshold
- p1266 BI: Bypass control command
- p1267 Bypass changeover source configuration
- p1268 BI: Bypass feedback signal synchronization completed
- p1269 BI: Bypass switch feedback signal
- p1274 BI: Bypass switch monitoring time

Synchronization

- p3800 Sync–supply–drive activation
- p3801 Sync–supply–drive drive object number
- p3802 BI: Sync–supply–drive enable
- r3803 CO/BO: Sync–supply–drive control word
- r3804 CO: Sync–supply–drive target frequency
- r3805 CO: Sync–supply–drive frequency difference
- p3806 Sync–supply–drive frequency difference threshold
- r3808 CO: Sync–supply–drive phase difference
- p3809 Sync–supply–drive phase setpoint
- p3811 Sync–supply–drive frequency limitation
- r3812 CO: Sync–supply–drive correction frequency
- p3813 Sync–supply–drive phase synchronism threshold
- r3814 CO: Sync–supply–drive voltage difference
- p3815 Sync–supply–drive voltage difference threshold
- r3819 CO/BO: Sync–supply–drive status word

9.4.3 Extended brake control

Description

The "Extended brake control" function module allows complex braking control for motor holding brakes and holding brakes for example.

The brake is controlled as follows (the sequence reflects the priority):

- Via parameter p1215
- Via binector parameters p1219[0...3] and p0855
- Via zero speed detection
- Via a connector interconnection threshold value

Commissioning

The "Extended brake control" function module can be activated by running the commissioning wizard. Parameter r0108.14 indicates whether the function module has been activated.

Parameter p1215 must be set to "3" and the brake controlled via a digital output (for example at the customer terminal block TM31).

Extended brake control when braking with feedback

When braking with a feedback signal (p1275.5 = 1), the brake control reacts to the feedback signal contacts of the brake. If the timer p1216 is greater than the time to the feedback signal, then the approach is delayed by the corresponding time difference.

In order to be able to approach with as little delay as possible, the opening time set in p1216 must be shorter than the time to the feedback signal. However, if the timer in p1216 is set shorter, then alarm A07931 "Brake does not open" appears.

Remedy:

1. Activate the "Release with feedback signal" (p1275.6 = 1).

   The pulse enable (BO: r1229.3) and setpoint enable (BO: r0899.15) are now independent of the set timer (p1217, p1216). The associated enable is determined only by the feedback signal (BI: p1222, BI: p1223). The timers (p1216, p1217) only affect the warnings A07931 "Brake does not open" and A07932 "Brake does not close".

2. Optional: To make the two warnings stop appearing, set both timers (p1217, p1216) to 0 ms.

   Result: The monitoring of the brake and the display of the alarms are switched off.

Example 1: Starting against a closed brake

When the device is switched on, the setpoint is enabled immediately (if other enable signals are issued), even if the brake has not yet been released (p1152 = 1). The factory setting p1152 = r0899.15 must be separated here. The drive first establishes a torque against the applied brake. The brake is not released until the motor torque or current (p1220) has exceeded braking threshold 1 (p1221).

Depending on the type and design of the brake, the time required to completely release the brake differs. It must be taken into consideration that, once the braking threshold torque has been exceeded, the operation enable signal (p0899.2) is interrupted for the time interval that the brake is being released (p1216) to ensure that the motor current does not exceed the permissible limit values during this period and the motor torque generated does not damage the brake. Time interval p1216 must be set depending on the time the brake actually requires to release.

This configuration is used, for example, when the drive is connected to a belt that is under tension (loop accumulator in the steel industry).

Example 2: Emergency brake

If emergency braking is required, electrical and mechanical braking is to take place simultaneously. This can be achieved if OFF3 is used as a tripping signal for emergency braking:

p1219[0] = r0898.2 and p1275.00 = 1 (OFF3 to "apply brake immediately" and invert signal).

To prevent the converter working in opposition to the brake, the OFF3 ramp (p1135) should be set to 0 seconds. Regenerative energy may accumulate, and this must be either fed back into the supply system or converted into heat using a braking resistor.

Typical applications include calenders, cutting tools, travel units and presses, for example.

Example 3: Service brake on crane drives

For cranes with manual control, it is important that the drive responds immediately when the control lever is moved (master switch). To this end, the drive is powered up using the on command (p0840) (the pulses are enabled). Speed setpoint (p1142) and speed controller (p0856) are inhibited. The motor is magnetized. As a consequence, the magnetization time generally applicable for three-phase motors (1 - 2s) is eliminated.

Now, only the brake opening time will delay the motor starting to rotate following activation of the master switch. Movement of the master switch generates a "setpoint enable from the control" (bit interconnected with p1142, p1229.2, p1224.0). The speed controller is enabled immediately and the speed setpoint is enabled once the brake opening time (p1216) has elapsed. When the master switch is in the zero position, the speed setpoint is inhibited and the drive ramps down along the ramp-function generator's ramp-down ramp. The brake closes once the standstill limit (p1226) is undershot. Once the brake closing time (p1217) has elapsed, the speed controller is inhibited (the motor is no longer generating any force). Extended braking control is used with the modifications described below.

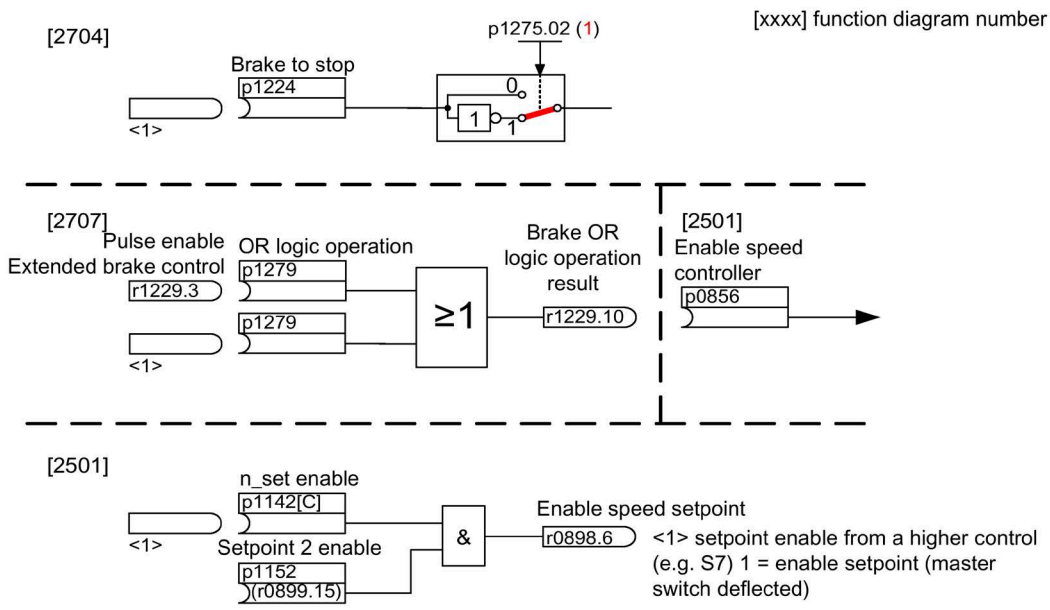

Figure 9-27 Example: Service brake on a crane drive

Control and status messages for extended brake control

Table 9- 13 Control of extended brake control

Signal name	Binector input	Control word sequence control/ interconnection parameters
Enable speed setpoint	p1142 BI: Enable speed setpoint	STWA.6
Enable setpoint 2	p1152 BI: Setpoint 2 enable	p1152 = r0899.15
Unconditionally release holding brake	p0855 BI: Unconditionally release holding brake	STWA.7
Enable speed controller	p0856 BI: Enable speed controller	STWA.12
Unconditionally apply holding brake	p0858 BI: Unconditionally apply holding brake	STWA.14

Table 9- 14 Status message of extended brake control

Signal name	Parameter	Brake status word
Command, release brake (continuous signal)	r1229.1	B_STW.1
Pulse enable, extended brake control	r1229.3	B_STW.3
Brake does not release	r1229.4	B_STW.4
Brake does not close	r1229.5	B_STW.5
Brake threshold exceeded	r1229.6	B_STW.6
Brake threshold fallen below	r1229.7	B_STW.7
Brake monitoring time expired	r1229.8	B_STW.8
Request, pulse enable missing/n_ctrl inhibited	r1229.9	B_STW.9
Brake OR logic operation result	r1229.10	B_STW.10
Brake AND logic operation result	r1229.11	B_STW.11

Function diagram

FP 2704 Extended brake control – standstill detection (r0108.14 = 1)
FP 2707 Extended brake control – release/close brake (r0108.14 = 1)
FP 2711 Extended brake control – signal outputs (r0108.14 = 1)

Parameter

- r0108.14 Extended brake control
- r0899 CO/BO: Status word sequence control

Standstill (zero-speed) monitoring

- r0060 CO: Speed setpoint before the setpoint filter
- r0063[0...2] CO: Speed actual value
- p1224[0...3] BI: Apply motor holding brake at standstill
- p1225 CI: Standstill detection threshold value
- p1226 Standstill monitoring speed threshold
- p1227 Standstill detection monitoring time
- p1228 Pulse suppression delay time
- p1276 Motor holding brake standstill detection bypass

Release/apply brake

- p0855 BI: Unconditionally release holding brake
- p0858 BI: Unconditionally apply holding brake
- p1216 Motor holding brake release time
- p1217 Motor holding brake closing time
- p1218[0...1] BI: Release motor holding brake
- p1219[0...3] BI: Immediately apply motor holding brake
- p1220 CI: Release motor holding brake, signal source, threshold
- p1221 Release motor holding brake, threshold
- p1277 Motor holding brake, delay, braking threshold exceeded
- p1279 BI: Motor holding brake OR/AND logic operation

Brake monitoring functions

- p1222 BI: Motor holding brake, feedback signal, brake closed
- p1223 BI: Motor holding brake, feedback signal, brake released

Configuration, control/status words

- p1215 Motor holding brake configuration
- r1229 CO/BO: Motor holding brake status word
- p1275 Motor holding brake control word
- p1278 Motor holding brake type

9.4.4 Extended monitoring functions

Description

The "extended monitoring functions" function module enables additional monitoring functions:

- Speed setpoint monitoring: |n_set| ≤ p2161
- Speed setpoint monitoring: n_set > 0
- Load monitoring

Description of load monitoring

This function monitors power transmission between the motor and the working machine. Typical applications include V-belts, flat belts, or chains that loop around the belt pulleys or cog wheels of drive and outgoing shafts and transfer the peripheral speeds and forces. Load monitoring can be used here to identify blockages in the working machine and interruptions to the power transmission.
For load monitoring, the current speed/torque curve is compared with the programmed speed/torque curve (p2182 to p2190). If the current value is outside the programmed tolerance bandwidth, a fault or alarm is triggered depending on parameter p2181. The fault or alarm message can be delayed by means of parameter p2192 to prevent false alarms caused by brief transitional states.

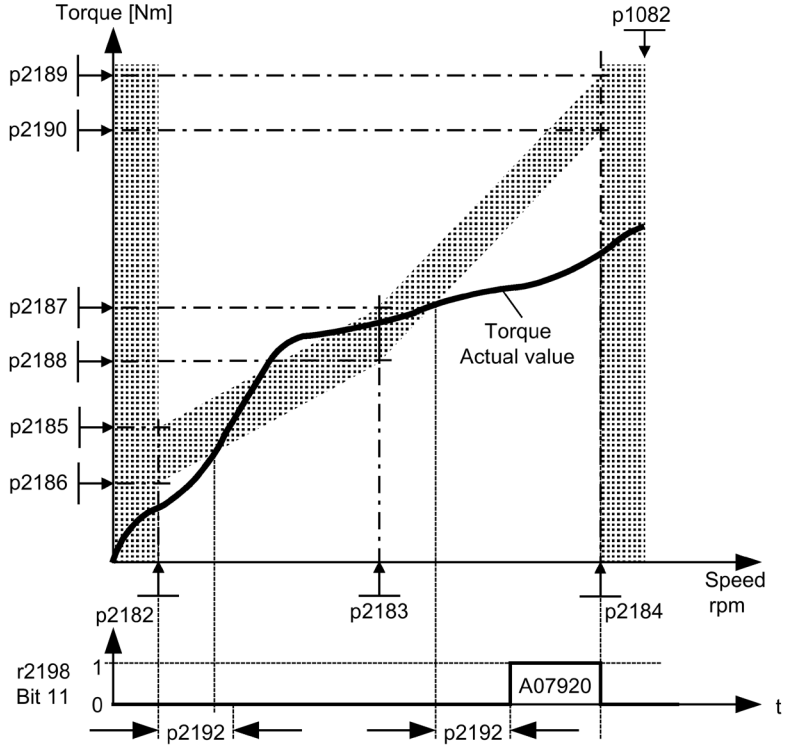

Figure 9-28 Load monitoring (p2181 =1)

Commissioning

The "extended monitoring functions" function module can be activated by running the commissioning wizard. Parameter r0108.17 indicates whether it has been activated.

Function diagram

FD 8010	Speed messages 1
FP 8011	Speed messages 2
FD 8013	Load monitoring

Parameters

- p2150 Hysteresis speed 3
- p2151 CI: Speed setpoint for messages
- p2161 Speed threshold 3
- p2181 Load monitoring, response
- p2182 Load monitoring, speed threshold 1
- p2183 Load monitoring, speed threshold 2
- p2184 Load monitoring, speed threshold 3
- p2185 Load monitoring, speed threshold 1 upper
- ...
- p2190 Load monitoring, speed threshold 3 lower
- p2192 Load monitoring, delay time
- r2198.4 |n_set| ≤ p2161
- r2198.5 n_set > 0
- r2198.11 Load monitoring displays alarm
- r2198.12 Load monitoring displays fault

9.4.5 Moment of inertia estimator

Background

From the load moment of inertia and the speed setpoint change, the converter calculates the accelerating torque required for the motor. Via the speed controller precontrol, the accelerating torque specifies the main percentage of the torque setpoint. The speed controller corrects inaccuracies in the precontrol (feed-forward control).

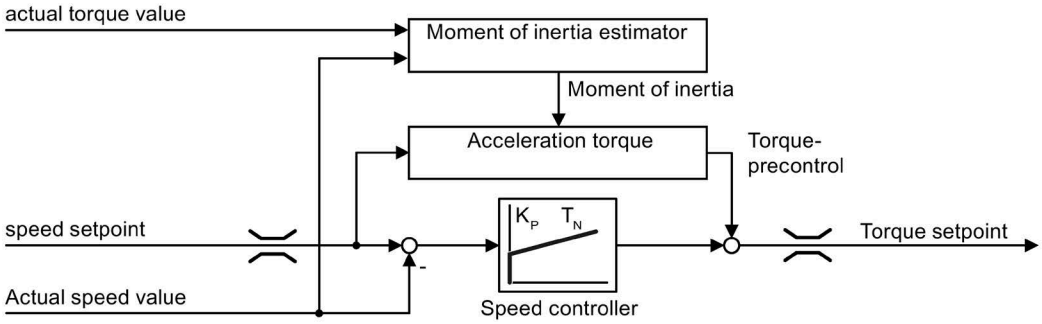

Figure 9-29 Influence of the moment of inertia estimator on the speed control

The more precise the value of the moment of inertia in the converter, the lower the overshoot after speed changes.

Figure 9-30 Influence of the moment of inertia estimator on the speed

Function

From the actual speed, the actual motor torque and the frictional torque of the load, the converter calculates the total moment of inertia of the load and motor.

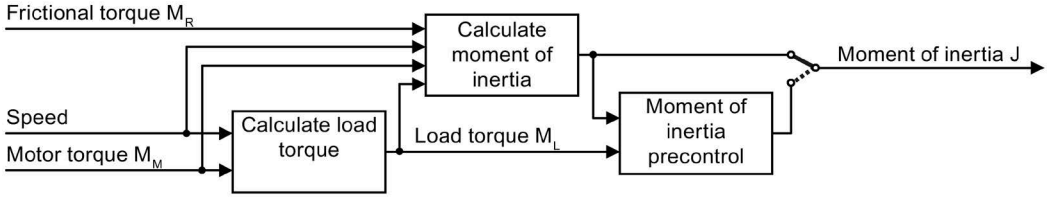

Figure 9-31 Overview of the function of the moment of inertia estimator

Calculating the load torque

The load torque must first be determined to determine the moment of inertia.

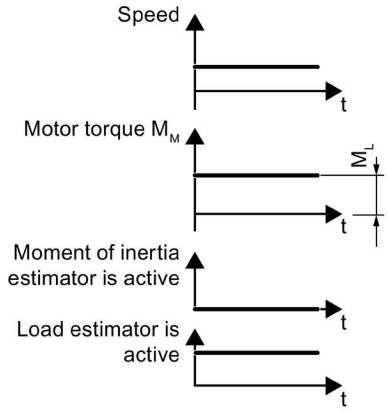

Figure 9-32 Calculating the load torque

Phases with constant speed not equal to zero are required to determine the load torque (e.g. friction force).
For small speed changes, the converter calculates the load torque M_L from the actual motor torque.

The following conditions must be satisfied to do this:

- Speed ≥ p1226
- Acceleration setpoint < 8 1/s^2
- Acceleration x moment of inertia (r1493) < 0.9 × p1560

Once the load torque is specified, the moment of inertia in the acceleration or deceleration phase can be determined. If the source of p1502 has a 1 signal, the moment of inertia is not estimated.

The accuracy of the moment of inertia estimation increases as the acceleration rate increases. The start value of the moment of inertia estimator is the parameterized moment of inertia (J = p0341 x p0342 + p1498).

Calculating the moment of inertia

For larger changes, the converter initially calculates the accelerating torque M_B as difference between the motor torque M_M, load torque M_L and frictional torque M_R:

$M_B = M_M - M_L - M_R$

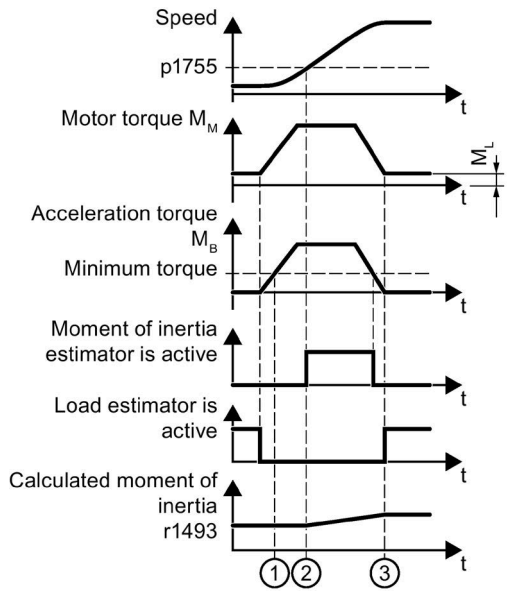

Figure 9-33 Calculating the moment of inertia

The moment of inertia J of the motor and load is then obtained from the accelerating torque M_B and the angular acceleration α

$J = M_B / \alpha$

The following conditions must be fulfilled for this calculation:

① The rated acceleration torque M_B must satisfy the following two conditions:
- M_B must be greater than p1560 x r0333 (rated motor torque).
- M_B must be greater than 80% of the friction torque (0.4 x (p1563 - p1564)).

② For operation without encoder, the speed must be > p1755 (in closed-loop controlled operation).

③ The converter calculates the load torque again after acceleration.

If the load estimation has taken place and the moment of inertia does not settle (stabilize) (r1407.24/26 = 0), then increasing the acceleration (p2572/p2573) is recommended.

If the load moment of inertia is significantly greater than the motor moment of inertia, then the transient event can also be improved via parameterization of the load moment of inertia (p1498).

Moment of inertia precontrol

In applications where the motor predominantly operates with a constant speed, the converter can only infrequently calculate the moment of inertia using the function described above. Moment of inertia precontrol is available for situations such as these. The moment of inertia precontrol assumes that there is an approximately linear relationship between the moment of inertia and the load torque.

You can configure the moment of inertia precontrol via p5310.

- Using bit 0, you can activate the calculation of the characteristic (p5312 ... p5315).
- Using bit 1, you can activate the moment of inertia precontrol.

The following bit combinations are possible:

p5310.0 = 0, p5310.1 = 0	Moment of inertia precontrol not active
p5310.0 = 0, p5310.1 = 1	Cyclic calculation of the coefficients without moment of inertia pre-control (commissioning)
p5310.0 = 1, p5310.1 = 0	Moment of inertia precontrol activated (without cyclic calculation of the coefficients)
p5310.0 = 1, p5310.1 = 1	Moment of inertia precontrol activated (with cyclic calculation of the coefficients)

The status word of the moment of inertia precontrol is indicated in r5311.

Example

For a horizontal conveyor, in a first approximation, the moment of inertia depends on the load.

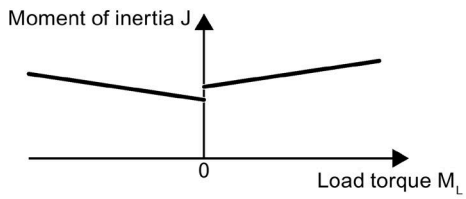

Figure 9-34 Relationship between moment of inertia J and load torque M_L

The relationship between load torque and torque is saved in the converter as linear characteristic.

- In positive direction of rotation:
  Moment of inertia J = p5312 x load torque M_L + p5313
- In negative direction of rotation:
  Moment of inertia J = p5314 x load torque M_L + p5315

You have the following options to determine the characteristic:

- You already know the characteristic from other measurements. In this case, you must set the parameters to known values when commissioning the system.
- The converter iteratively determines the characteristic by performing measurements while the motor is operational.

Additional supplementary functions

- Accelerated moment of inertia estimation (p1400.24 = 1)

  Using this setting, when the drive accelerates steadily, the moment of inertia can be more quickly estimated.
- Speed controller adaptation (p5271.2 = 1)

  The estimated load moment of inertia is taken into account for the speed controller gain.

Commissioning

The "inertia estimator" function module can be activated by running the commissioning wizard. Parameter r0108.10 indicates whether the function module has been activated.

Activating the moment of inertia estimator

The moment of inertia estimator is deactivated in the factory setting. p1400.18 = 0, p1400.20 = 0, p1400.22 = 0.

If you performed the rotating measurement for the motor identification during commissioning, we recommend leaving the moment of inertia estimator deactivated.

Preconditions

- You have selected sensorless vector control.
- The load torque must be constant whilst the motor accelerates or brakes.

  Typical of a constant load torque are conveyor applications and centrifuges, for example.

  Fan applications, for example, are not permitted.
- The speed setpoint is free from superimposed unwanted signals.
- The motor and load are connected to each other with an interference fit.

  Drives with slip between the motor shaft and load are not permitted, e.g. as a result of loose or worn drive belts.

If the conditions are not met, you must not activate the moment of inertia estimator.

Procedure

To activate the moment of inertia estimator, proceed as follows:

1. Set p1400.18 = 1
2. Check: p1496 ≠ 0
3. Activate the acceleration model of the speed controller pre-control: p1400.20 = 1.

With p1400.22 = 1, the valued determined by the moment of inertia estimator is retained at a pulse inhibit.

With p1400.24 = 1, the moment of inertia can be determined in an accelerated manner for steady acceleration processes.

Function diagram

FP 6035 Moment of inertia estimator (r0108.10 = 1)

Parameters

- r0108 Drive objects function module
- r0333 Rated motor torque
- p0341 motor moment of inertia
- p0342 Ratio between the total and motor moment of inertia
- p1226 Speed threshold for standstill detection
- p1400 Speed control configuration
- p1402 Current control and motor model configuration
- r1407 CO/BO: Status word, speed controller
- r1493 CO: Moment of inertia total
- p1496 Acceleration precontrol scaling
- p1497 CI: Moment of inertia scaling
- p1498 Load moment of inertia
- p1502 BI: Freezing the moment of inertia estimator
- r1518 CO: Acceleration torque
- r1538 CO: Upper effective torque limit
- r1539 CO: Lower effective torque limit
- p1560 Moment of inertia estimator acceleration threshold value
- p1561 Moment of inertia estimator change time moment of inertia
- p1562 Moment of inertia estimator change time load
- p1563 CO: Moment of inertia estimator load torque positive direction of rotation
- p1564 CO: Moment of inertia estimator load torque negative direction of rotation
- p1755 Motor model changeover speed encoderless operation
- p5310 Moment of inertia precontrol configuration
- r5311 Moment of inertia precontrol status word
- p5312 Moment of inertia precontrol linear positive
- p5313 Moment of inertia precontrol constant positive
- p5314 Moment of inertia precontrol linear negative
- p5315 Moment of inertia precontrol constant negative
- p5316 Moment of inertia precontrol change time moment of inertia

9.4.6 Closed-loop position control

Description

The "Closed-loop position control" function module includes:

- Position actual value conditioning (including the lower-level measuring probe evaluation and reference mark search)
- Position controller (including limitation, adaptation and pre-control calculation)
- Monitoring (including zero-speed, positioning, dynamic following error monitoring system and cam signals)
- Position tracking of the load gear (motor encoder), using absolute encoders for rotary axes (modulo) as for linear axes.

Commissioning

The "Closed-loop position control" function module can be activated using the drive characteristics dialog.

When the "Basic positioner" function module (r0108.4 = 1) is activated, then the function module "Position control" (r0108.3) is automatically activated.

The current configuration can be checked in parameter r0108.3.

The position controller can be parameterized in a user-friendly fashion using the screen forms in STARTER.

The "closed-loop position control" function module is essential for operating the basic positioner.

Note

Trigger of the monitoring functions of the position controller

If the "position control" function module is active, and to optimize the speed controller, a function generator signal is interconnected to the speed controller input p1160, then the position controller monitoring functions respond.

To prevent this from happening, the position controller must be deactivated (p2550 = 0) and the tracking mode must be activated (p2655 = 1, for control using PROFIdrive telegram 110 PosSTW.0 = 1). In this way, the monitoring functions are switched off and the position setpoint is tracked.

Function diagram

FD 4010	Position actual value processing (r0108.3 = 1)
FD 4015	Position controller (r0108.3 = 1)
FD 4020	Standstill monitoring / positioning monitoring (r0108.3 = 1)
FD 4025	Dynamic following error monitoring, cam controllers (r0108.3 = 1)

9.4.6.1 Actual position value preparation

Description

The position actual value conditioning converts the actual position values into a neutral distance unit LU (Length Unit). For this purpose, the function block uses the Gn_XIST1, Gn_XIST2, Gn_STW and Gn_ZSW encoder interfaces available in the encoder evaluation/motor controller. These simply provide the position data in encoder bars and fine resolution (increments).

The position actual value is conditioned, regardless of whether the position controller is enabled immediately after the system has booted, as soon as valid values are received via the encoder interface.

Parameter p2502 (encoder assignment) is used to define from which encoder (1, 2 or 3), the actual position value is sensed.

The following connection is run automatically after assignment:

- p0480[0] (G1_STW) = encoder control word r2520[0]
- p0480[1] (G2_STW) = encoder control word r2520[1]
- p0480[2] (G3_STW) = encoder control word r2520[2]

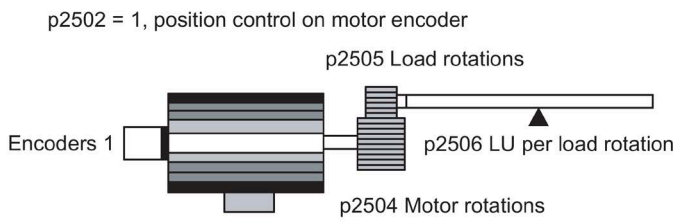

Figure 9-35 Position actual value conditioning with rotary encoders

The link between the physical variables and the neutral length unit LU is established via parameter p2506 (LU per load revolution) for rotary encoders. Parameter p2506 along with p2504, p2505 reflect the relationship between encoder increments and the neutral length unit LU.

Example:
Rotary encoder, ball screw with a pitch of 10 mm/revolution. 10 mm should have a resolution of 1 µm (i.e. 1 LU = 1 µm)

-> One load revolution corresponds to 10000 LU

-> p2506 = 10000

Note

Effective actual-value resolution

The effective actual value resolution is obtained from the product of the encoder pulses (p0408) and the fine resolution (p0418) and a measuring gear that is possibly being used (p0402, p0432, p0433).

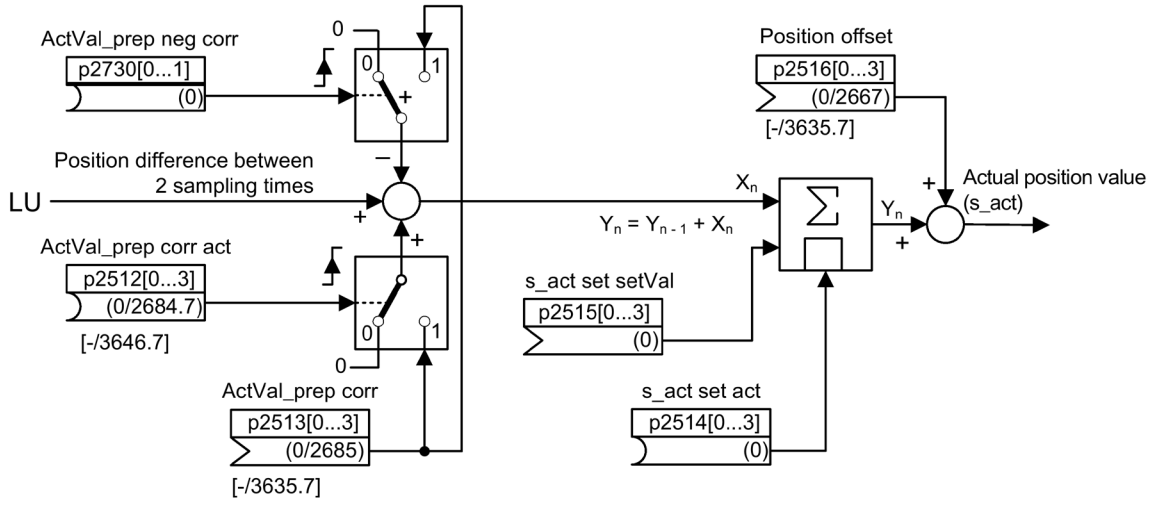

Figure 9-36 Position actual value conditioning

An offset can be undertaken using connector input p2513 (actual position value conditioning offset) and a positive edge at the binector input p2512 (activate offset). When the "basic positioner" function module is activated, p2513 is automatically connected with r2685 (EPOS offset) and p2515 with r2684.7 (activate offset). This interconnection enables modulo offset by EPOS, for example.

The correction value available at connector input p2513 can be negated and activated via p2730.

A position offset can be entered via connector input p2516. Using EPOS, p2516 is automatically interconnected to r2667. Backlash compensation is implemented using this interconnection.

Using the connector input p2515 (position setting value) and a "1" signal at binector input p2514 (set position actual value), a position setting value can be entered.

Note

No evaluation of the incoming encoder increments

When the actual position value is set (p2514 = "1" signal), the actual position value of the position controller is kept at the value of connector p2515 as standard.

Incoming encoder increments are not evaluated. A difference in position cannot be compensated for in this situation.

An inversion of the actual position value resulting from the encoder is undertaken using parameter p0410. An inversion of the axis motion can be entered using a negative value in p2505.

Indexed actual value acquisition

The indexed actual position value acquisition permits, e.g. length measurements on parts as well as the detection of axis positions by a higher-level controller (e.g. SIMATIC S7) in addition to the position control, e.g. of a belt conveyor.

Two more encoders can be operated in parallel with the encoders for actual value conditioning and position control in order to collect actual values and measured data.

The indexed acquisition of actual values can preprocess a position actual value at each of the three encoder outputs. The parameter p2502[0...3] is used to select the encoder evaluation for position control.

The parameters of the indexed actual value acquisition are indexed four times. Indices 1...3 are assigned to the encoder evaluations 1...3. The index 0 is assigned to position control.

The parameter r2521[0...3] can be used to retrieve the current actual values of all connected encoders. For example, the position actual value for position control in r2521[0] is identical with the value r2521[1] if the position control uses encoder evaluation 1. The signal source for a position offset can be set via parameter p2516[0...3].

The absolute encoder adjustment is initiated via p2507[0...3].2, and its successful completion is reported via p2507[0...3].3. The signal source "Reference point coordinate for the position controller" p2598[0] is interconnected with p2599 during basic positioning. The other signal sources are not interconnected in the standard configuration.

The measuring probe evaluation can be enabled for the encoder evaluation x, which is not assigned to position control, via p2509[x]. The signal sources are assigned via p2510[0...3], the edge evaluation is set via p2511[0...3]. The measured value is available in r2523[x] if, in the status word for encoder x (encoder 0: r2526.0...9, encoder1: 2627.0...2, encoder2: r2628.0...2, encoder3: r2529.0...2), the "Valid measured value" bit has been set.

The actual position values of the different encoders can be read out using parameter r2521[0...3]. These position actual values can be corrected with a signed value from p2513[0...3] after a 0/1 signal from the signal source in p2512[0...3].

In addition, the velocity actual value (r2522[0...3]) and the position offset for absolute encoders p2525[0...3] can be processed for each encoder by the higher-level controller.

Load gear position tracking

Position tracking enables the load position to be reproduced when using gears. It can also be used to extend the position area.

Position tracking for load gear functions in the same way as position tracking for the measuring gear (see Chapter "Measuring gearbox (Page 638)"). Position tracking is activated using parameter p2720.0 = 1. However, position tracking of the load gear is only relevant for the motor encoder (encoder 1). The load gear ratio is entered via parameters p2504 and p2505. Position tracking can be activated with rotary axes (modulo) and linear axes.

Position tracking for the load gear can only be activated once for each motor data set MDS.

The load position actual value in r2723 (must be requested via Gn_STW.13) is made up of the following information:

- Encoder pulses per revolution (p0408)
- Fine resolution per revolution (p0419)
- Virtual number of stored revolutions of a rotary absolute encoder (p2721)
- Load gear ratio (p2504/p2505)
- Measuring gear ratio (p0433/p0432), if p0411.0 = 1

Note

Aggregate limitation

The total of p0408, p0419 and p2721 is limited to 32 bits.

Note

Load gear problems and solutions, see the example in Chapter "Measuring gearbox (Page 638)".

Example of position area extension

With absolute encoders without position tracking, it must be ensured that the traversing range around 0 is less than half the encoder range, because beyond this range, no unique reference remains after switching on and off (see the description for parameter p2507). This traversing range can be extended using the virtual multiturn (p2721).

The following diagram illustrates an absolute encoder that can represent 8 encoder revolutions (p0412 = 8).

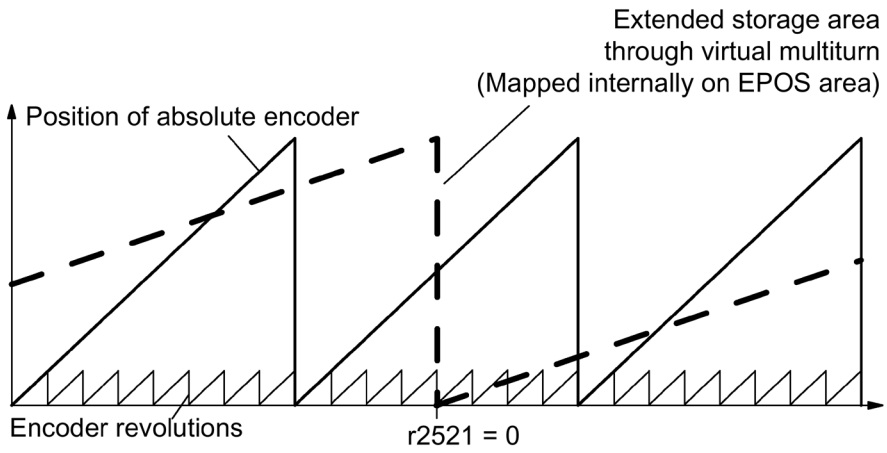

Figure 9-37 Position tracking, load gear (p2721 = 24), setting p2504 = p2505 =1 (gear factor = 1)

In this example, this means:

- Without position tracking, the position for +/- 4 encoder revolutions around r2521 = 0 LU can be reproduced.
- With position tracking, the position for +/- 12 encoder revolutions (+/- 12 load revolutions with load gear) can be reproduced (p2721 = 24).

Practical example:
For a linear axis, the value for p2721 is set to 262144 for an encoder with p0421 = 4096. This means that +/- 131072 encoder revolutions or load revolutions can be reproduced.

For a rotary axis, a value for p2721 = p0421 is set for an encoder.

Configuration of the load gear (p2720)

The following points can be set by configuring this parameter:

- p2720.0: Activation of position tracking
- p2720.1: Setting the axis type (linear axis or rotary axis)

  Here, a rotary axis refers to a modulo axis; the modulo offset can be activated from a higher-level control or EPOS. With a linear axis, position tracking is mainly used to extend the position area (see section: Virtual multiturn encoder (p2721)).
- p2720.2: Reset position

  The position values stored in a non-volatile fashion are reset for the following events:
  - If encoder replacement is detected.
  - If the configuration of the encoder data set (EDS) is modified.
  - If the absolute encoder is re-calibrated.

Note

If position tracking of the load gear is activated with parameter p2720.0 = 1 (Load gear activate position tracking) after the encoder has been adjusted (p2507 = 3), then the adjustment is reset.

Further adjustment of the encoder while the position tracking is activated will cause the load gear position to be reset (overflow).

The permissible range of position tracking is mapped to the reproducible EPOS encoder range.

It is possible to activate position tracking for several DDS.

Virtual multiturn encoder (p2721)

The number of resolvable motor revolutions for a rotary absolute encoder with active position tracking can be set using the virtual multiturn resolution.
It is only editable for rotary axes.

With a rotary absolute encoder (p0404.1 = 1) with activated position tracking (p2720.0 = 1), p2721 can be used to enter a virtual multiturn resolution.

Note

If the gear ratio is not equal to 1, then p2721 always refers to the load side.
The virtual resolution is set here, which is required for the load.

For rotary axes, the virtual multiturn resolution (p2721) is preassigned the value of the multiturn resolution of the encoder (p0421) and can be changed.
Example, singleturn encoder:
Parameter p0421 is preassigned "1". However, parameter p2721 can be subsequently modified, e.g. it can be set to p2721 = 5. As a result, the encoder evaluation initiates 5 load rotations before the same absolute value is achieved again.

In the case of linear axes, the virtual multiturn resolution (p2721) is preset to the value of the multiturn resolution of the encoder extended by 6 bits (p0421) (max. 32 overflows, positive/negative).
After this, the setting for p2721 can no longer be changed.
Example for a multiturn encoder:
For a linear axis, for an encoder with p0421 = 4096, the value for p2721 is set to 262144.
This means that +/- 131072 encoder revolutions or load revolutions can be reproduced.

If, as a result of extension of the multiturn information, the displayable area of r2723 (32 bits) is exceeded, the fine resolution (p0419) must be reduced accordingly.

Tolerance window (p2722)

After switching on, the difference between the stored position and the actual position is determined and, depending on the result, the following is initiated:

- Difference within the tolerance window -> the position is reproduced based on the current actual encoder value.
- Difference outside the tolerance window --> fault F07449 is output.

The tolerance window is preset to quarter of the encoder range and can be changed.

Note

The position can only be reproduced if, in the powered-down state, the encoder was moved through less than half of the range that it can represent. For the standard EQN1325 encoder, this is 2048 revolutions or half a revolution for single-turn encoders.

Note

The ratio stamped on the gear rating plate is often just a rounded-off value (e.g.1:7.34). If, for a rotary axis, it is not permissible to have any long-term drift, then the actual ratio of the gear teeth must be requested from the gear manufacturer.

Several drive data sets

Position tracking of the load gear can be activated in multiple drive data sets.

- The load gear is DDS-dependent.
- Position tracking of the load gear is calculated only for the active drive data set and is EDS-dependent.
- The position tracking memory is only available once for each EDS.
- If position tracking is to be continued in different drive data sets with the same mechanical relationships and the same encoder data sets, it must be activated explicitly in all relevant drive data sets. Possible applications for drive data set changeover with continued position tracking:
  - Star/delta changeover
  - Different ramp-up times / controller settings
- For a drive data set switchover, which involves a change in gear unit, the position tracking function restarts, i.e. after switchover, the response is the same as if a POWER ON had occurred.
- For identical mechanical relationships and the same encoder data set, a DDS switchover has no effect on the calibration status and reference point status.

Restrictions

- If an encoder data set is used as encoder 1 in several drive data sets with different gears, it is not possible to activate position tracking there. If an attempt is nevertheless made to activate position tracking, fault F07555 (drive encoder: Configuration position tracking) is output with fault value 03 hex.
  A check is always performed to determine whether the load gear is the same in all DDS in which the relevant encoder data set is used.
  Load gear parameters p2504[D], p2505[D], p2720[D], p2721[D] as well as p2722[D] must be identical in this case.
- If an encoder data set is used in one DDS as a motor encoder with position tracking and in another DDS as an external encoder, then when a changeover is made, position tracking is re-initialized, i.e. the response after switchover is the same as the response after a POWER ON.
- If position tracking is reset in one drive data set, it is also reset in all other drive data sets which contain this encoder data set.
- The maximum permissible movement of an axis in an inactive drive data sets is half the encoder range (see p2722: tolerance window).

The table below describes the changeover behavior on transition from one DDS to another. A changeover is always executed by DDS0.

An overview of DDS changeover without position tracking load gear can be found in Chapter "Referencing (Page 695)", in Section "Instructions for data set changeover".

Table 9- 15 DDS changeover with load gear position tracking

DDS	0	1	2	3	4	5	6	7	8	9
p0186 (MDS)	0	0	0	0	0	1	2	3	0	4
p0187 (encoder 1)	EDS0	EDS0	EDS0	EDS0	EDS0	EDS4	EDS5	EDS0	EDS0	EDS6
p0188 (encoder 2)	EDS1	EDS1	EDS1	EDS1	EDS3	EDS1	EDS6	EDS1	EDS1	EDS0
p0189 (encoder 3)	EDS2	EDS2	EDS2	EDS2	EDS2	EDS2	EDS6	EDS2	EDS2	EDS2
p2502 (encoder for position control)	Encoder_1	Encoder_1	Encoder_1	Encoder_2	Encoder_2	Encoder_2	Encoder_1	Encoder_1	Encoder_1	Encoder_1
Mechanical relationships p2504/p2505/p2506/p2503 A, B, C and D designate different mechanical relationships.	A	A	B	A	A	A	D	A	A	C
Load gear position tracking	Activated	Activated	Deactivated	Activated	Activated	Activated	Activated	Activated	Deactivated	Activated

Table 9- 16 DDS changeover response

DDS	Changeover response
0	-
1	Switchover during pulse inhibit or operation has no effect
2	Encoder adjustment and referencing bit are reset. Position tracking for EDS0 is no longer calculated, and must be re-adjusted when switching back to DDS0.
3	Position tracking for EDS0 is continued and the referencing bit is reset.[1)]
4	Pulse inhibit/operation: Position tracking for EDS0 is continued and the referencing bit is reset.[1)]
5	Position tracking for EDS4 is newly initiated and the referencing bit is reset.[1)] When switching back to DDS0, the same applies to EDS0.
6	Position tracking for EDS5 is reinitiated and the referencing bit is reset[1)]. When switching back to DDS0, the same applies for EDS0.
7	MDS changeover alone during pulse inhibit or operation has no effect
8	Pulse inhibit/operation: Referencing bit is reset.[1)] Position tracking for EDS0 is no longer calculated and, as a consequence, the actual position value also changes (the offset correction of the position tracking is canceled). When switching back to DDS0, the position tracking for EDS0 is newly initiated and the referencing bit is reset.[1)] It only makes sense to switch back to DDS0 without a new adjustment in DDS0 if the user did not make a new adjustment in DDS8 and the permissible tolerance window (p2722) was not exited.
9	Pulse inhibit/operation: Position tracking for EDS6 is reinitiated and the referencing bit is reset.[1)] When switching back to DDS0, the same applies to EDS0.

[1)] The referencing bit (r2684.11) is reset for a DDS changeover. If, in the new DDS, the EDS already has an adjusted encoder, then the referencing bit is set again.

Definitions:

- Position tracking is continued

  The behavior of the position tracking during the changeover is the same as it would have been had the data set not been changed.

- Position tracking is reinitiated (The position actual value can change when the changeover is made!)

  The response at switchover is the same as the response after a POWER ON. The position value read by the absolute encoder is compared to the stored value. If the position difference is within the tolerance window (p2722), the position is corrected correspondingly; if it is outside the range, a corresponding fault message is generated.

- Position tracking is reset (The position actual value can change when the changeover is made!)

  The stored absolute value is rejected and the overflow counter is reset to zero.

- Position tracking is not calculated (the position actual value changes when the changeover is made!)

  The saved absolute value of the position tracking - including the offset correction from the dissolved DDS - is not used.

- Additional information: The position tracking memory is only available once for each EDS.

Commissioning position tracking load gear using STARTER

The position tracking function can be configured in the "Mechanical system" screen for "Position control" in STARTER.
The "Mechanical system" screen for "Position control" is not accessible unless the function module "Basic positioner" is activated (r0108.4 = 1) which means that the function module "Position control" (r0108.3 = 1) was also automatically activated.

The "Basic positioner" function module can be activated via the commissioning wizard or the drive configuration (configuring DDS) (configuration "Closed-loop control structure" - checkbox "Basic positioner").

Configuring the position tracking load gear function

The "Position tracking load gear" function can be configured in the following STARTER screens:

1. In the "Mechanical system configuration" screen in the commissioning wizard.
2. In the project navigator under "Drive" > "Technology" > "Position control" in the "Mechanical System" screen.

Function diagram

FD 4010	Position actual value preprocessing (r0108.3 = 1)
FP 4704	Position and temperature sensing, encoders 1...3
FP 4710	Speed actual value and pole position sensing, encoder 1

Parameter

- p2502 LR encoder assignment
- p2503 LR length unit LU per 10 mm
- p2504 LR motor/load motor revolutions
- p2505 LR motor/load load revolutions
- p2506 LR length unit LU per load revolution
- r2520 CO: LR position actual value conditioning encoder control word
- r2521 CO: LR actual position value
- r2522 CO: LR actual velocity value
- r2523 CO: LR measured value
- r2524 CO: LR LU/revolutions
- r2525 CO: LR encoder adjustment offset
- r2526 CO/BO: LR status word
- p2720 Load gear configuration
- p2721 Load gear, absolute encoder, rotary revolutions, virtual
- p2722 Load gear, position tracking, tolerance window
- r2723 CO: Load gear absolute value
- r2724 CO: Load gear position difference
- p2730 BI: LR actual position value processing correction negative act. (edge)

9.4.6.2 Position controller

Description

The position controller is a PI controller. The P gain can be adapted using the product of connector input p2537 (position controller adaptation) and parameter p2538 (Kp).

Using connector input p2541 (limit), the speed setpoint of the position controller can be limited without pre-control. This connector input is pre-connected with connector output p2540.

The position controller is enabled using an AND logic operation of the binector inputs p2549 (position controller 1 enable) and p2550 (position controller 2 enable).

The position setpoint filter (p2533 time constant position setpoint filter) is a PT1 element, the symmetrizing filter as dead time element (p2535 symmetrizing filter speed precontrol (dead time)) and PT1 element (p2536 symmetrizing filter speed precontrol (PT1)). The speed precontrol p2534 (factor, speed precontrol) can be disabled via the value 0.

Note

Position controller without basic positioner for experts only

We recommend that only experts use the functions of the position controller without using the basic positioner.

Function diagram

FD 4015 Position controller

Parameter

- p2533 LR position setpoint filter time constants
- p2534 LR speed feedforward control factor
- p2535 LR speed feedforward control balancing filter dead time
- p2536 LR speed feedforward control balancing filter PT1
- p2537 CI: LR position control adaptation
- p2538 LR proportional gain
- p2539 LR integral time
- p2540 CO: LR position controller output speed limit
- p2541 CI: LR position controller output speed limit signal source

9.4.6.3 Monitoring functions

Description

The position controller monitors the standstill, positioning and following error.

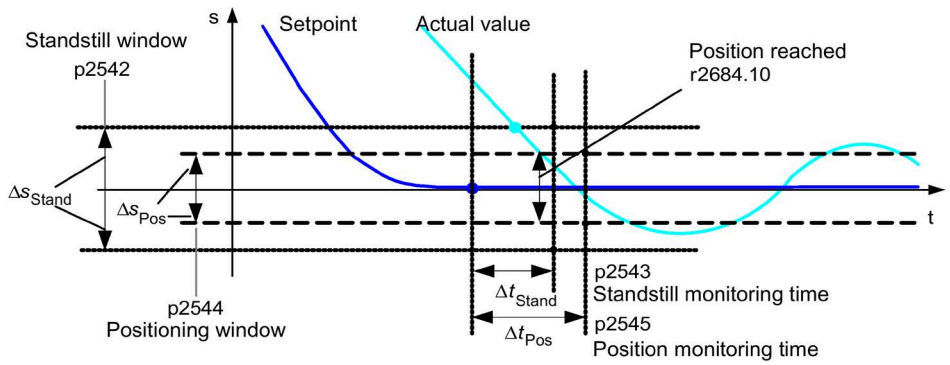

Figure 9-38 Zero-speed monitoring, positioning window

Standstill (zero-speed) monitoring

Zero-speed monitoring is activated via binector inputs p2551 (setpoint stationary) and p2542 (zero-speed window). If the zero-speed window is not reached once the monitoring time (p2543) has lapsed, fault F07450 is triggered.

Zero-speed monitoring is deactivated with value "0" in p2542. The standstill window should be larger than or equal to the positioning window (p2542 ≥ p2544). The standstill monitoring time should be less than or equal to the position monitoring time (p2543 ≤ p2545).

Position monitoring

Position monitoring is activated using binector inputs p2551 (setpoint stationary), p2554 = "0" (travel command not active) and p2544 (positioning window). Once the monitoring time (p2545) has elapsed, the positioning window is checked once. If this is not reached, fault F07451 is triggered.

Positioning monitoring can be deactivated with the value "0" in p2544. The standstill window should be larger than or equal to the positioning window (p2542 ≥ p2544). The standstill monitoring time should be less than or equal to the position monitoring time (p2543 ≤ p2545).

Following error monitoring

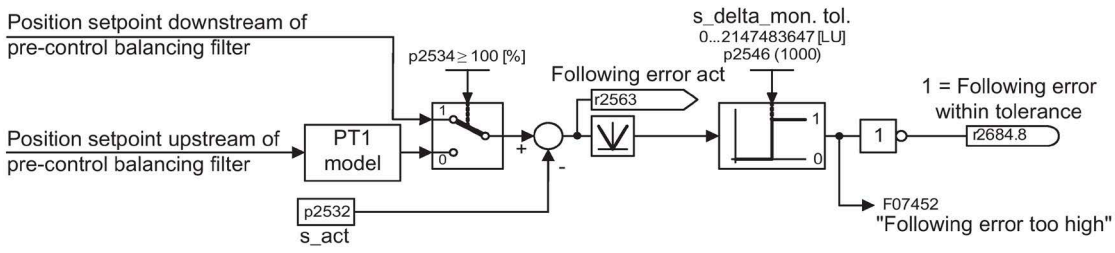

Figure 9-39 Following error monitoring

Following error monitoring is activated via p2546 (following error tolerance). If the value specified for the following error (r2563) is greater than p2546, fault F07452 is triggered and bit r2648.8 is reset.

Cam controllers

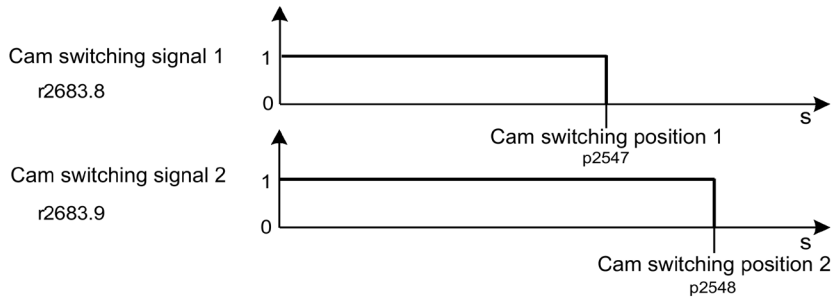

Figure 9-40 Cam controllers

The position controller has two cam controllers. If cam position p2547 or p2548 is passed in the positive direction (r2521 > p2547 or p2548), then cam signals r2683.8 and r2683.9 are reset.

Function diagram

FD 4020	Standstill monitoring / positioning monitoring (r0108.3 = 1)
FD 4025	Dynamic following error monitoring, cam controllers (r0108.3 = 1)

Parameter

- p2530 CI: LR setpoint position
- p2532 CI: LR actual position value
- p2542 LR zero-speed window
- p2543 LR zero-speed monitoring time
- p2544 LR positioning window
- p2545 LR position monitoring time
- p2546 LR dynamic following error monitoring tolerance
- p2547 LR cam switching position 1
- p2548 LR cam switching position 2
- p2551 BI: LR setpoint message present
- p2554 BI: LR travel command message active
- r2563 CO: LR latest following error
- r2683.8 Actual position value <= cam switching position 1
- r2683.9 Actual position value <= cam switching position 2
- r2684 CO/BO: EPOS status word 2

9.4.6.4 Measuring probe evaluation and reference mark search

Description

Binector inputs p2508 (activate reference mark search) and p2509 (activate measurement probe evaluation) can be used to trigger and run the "measurement probe evaluation" and "reference mark search" functions. Binector inputs p2510 (measurement probe selection) and p2511 (measurement probe edge evaluation) define the mode for measurement probe evaluation.

The probe signals are recorded via the encoder encoder status and control word. To speed up signal processing, direct measuring probe evaluation can be activated by selecting the input terminals for probes 1/2 via p2517 and p2518. Measuring probe evaluation is carried out in the position controller cycle, whereby the set send clock cycle of the controller (r2064[1]) must be an integer multiple of the position controller cycle (p0115[4]).

The system outputs a message if the same probe input is already being used (see also p0488, p0489, p0580, and p0680).

The appropriate function is started using a 0/1 edge at the appropriate input (p2508 (activate reference mark search) or p2509 (activate measuring probe evaluation)) via the encoder control word. Status bit r2526.1 (reference function active) reports the activity of the function (feedback from sensor status word). Status bit r2526.2 (measurement value valid) shows the presence of the measurement required r2523 (position for reference mark or measurement probe).

Once the function is complete (position determined for reference mark or measurement probe), r2526.1 (reference function active) and r2526.2 (measurement valid) continue to remain active and the measurement is provided by r2523 (reference measurement) until the corresponding input p2508 (activate reference mark search) or p2509 (activate measurement probe evaluation) is reset (0 signal).

If the function (reference mark search or measuring probe evaluation) has still not been completed and the corresponding input p2508 or p2509 is reset, then the function is interrupted via the encoder control word and status bit r2526.1 (reference function active) is reset via the encoder status word.

Setting the two binector inputs p2508 and p2509 at the same time results in the active function being aborted and/or no functions being started. This is indicated by alarm A07495 "reference function aborted" and remains active until the activations at the binector inputs are reset. The alarm is also generated if a fault is signaled during an activated function (reference mark search or measurement probe evaluation) by the encoder status word.

If the "position controller" function module is selected, these parameters (p2508 to p2511) are preassigned with "0". If the "basic positioner" function module is selected, the "reference mark search" (for search for reference point) and "measurement probe evaluation" (for the flying referencing function) functions are initiated by the "basic positioner" function module and feedback (r2526, r2523) returned to this.

Function diagram

FD 4010	Position actual value processing (r0108.3 = 1)
FD 4720	Encoder interface, receive signals, encoder 1 ... 3
FD 4730	Encoder interface, send signals, encoder 1 ... 3

Parameter

- p2508 BI: LR activate reference mark searches
- p2509 BI: LR activate measurement probe evaluation
- p2510 BI: LR measurement probe evaluation selection
- p2511 BI: LR measurement probe evaluation edge
- p2517 LR direct probe 1 input terminal
- p2518 LR direct probe 2 input terminal
- r2523 CO: LR measured value
- r2526 CO/BO: LR status word

9.4.7 Basic positioner

Description

The "Basic positioner" function module (EPOS) is used for the absolute/relative positioning of linear and rotary axes (modulo) with motor encoders (indirect measuring system) or machine encoders (direct measuring system).

For the basic positioner functionality, STARTER provides graphic guides through the configuration, commissioning and diagnostic functions. A control panel supports you when using the basic positioner and when operating in the closed-loop speed controlled mode.

The position control is automatically activated when activating the basic positioner using the commissioning wizards of STARTER. The required BICO interconnections are automatically established.

Note

Position controller is required

The basic positioner requires the position controller functions. The BICO interconnections, established by the basic positioner, may only be changed by experienced users.

As a result, the position control functions are also available.

- Standstill monitoring
- Position monitoring
- Dynamic following error monitoring
- Cam controllers
- Modulo function
- Probe evaluation

For additional information, see Chapter "Closed-loop position control (Page 668)."

Functions of the basic positioner

In addition, the following functions can be carried out using the "basic positioner" function module:

- Mechanical system (is assigned to position controller in the STARTER)
  - Backlash compensation
  - Modulo offset
  - Position tracking of the load gearbox (motor encoder) with absolute encoders
- Limitations
  - Velocity profile limitations
  - Traversing range limits
  - Jerk limit

- Homing or adjustment
  - Setting reference point (with stationary axis)
  - Reference point approach
    (separate operating mode including reversing cam functionality, automatic reversal of direction, referencing to "cams and encoder zero mark", only "encoder zero mark" or "external zero mark (BERO)")
  - Flying referencing
    (Superimposed referencing possible during "normal" traversing with the aid of the measurement probe evaluation; normally evaluation of a BERO, for example. Superimposed function for the modes "Jog", "Direct setpoint specification / MDI" and "Traversing blocks".)
  - Homing with incremental measuring systems
  - Absolute encoder adjustment
- Traversing blocks operating mode
  - Positioning by means of traversing blocks stored in the device, including continuation conditions and specific jobs for previously homed axis
  - Traversing block editor using STARTER
  - A traversing block contains the following information:

    - Traversing block number

    - Task (e.g. positioning, wait, GOTO set jump, set binary outputs)

    - Motion parameters (target position, velocity override for acceleration and deceleration)

    - Mode (e.g.: skip block, continuation conditions such as "Continue_with_stop" and "Continue_flying")

    - Task parameters (e.g. wait time, block step conditions)
- Direct setpoint specification mode (MDI)
  - Positioning (absolute, relative) and setting-up (endless closed-loop position control) using direct setpoint inputs (e.g. via the PLC or process data)
  - It is always possible to influence the motion parameters during traversing (on-the-fly setpoint acceptance) as well as on-the-fly change between the Setup and Positioning modes.
- Jog mode
  - Position-controlled traversing of the axis with the switchable modes "Endless position-controlled" or "Incremental jog" (to traverse an "increment")
- Standard PROFIdrive positioning telegrams are available (telegrams 7, 9 and 110), the selection of which automatically establishes the internal "connection" to the basic positioner.
- Control using PROFIdrive telegrams 7 and 110.

Commissioning

The "basic positioner" function module can be activated by running the commissioning Wizard. Parameter r0108.4 indicates whether the function module has been activated.

9.4.7.1 Mechanical system

Description

When mechanical force is transferred between a machine part and its drive, generally backlash occurs. If the mechanical system was to be adjusted/designed so that there was absolutely no play, this would result in high wear. Thus, backlash (play) can occur between the machine component and the encoder. For axes with indirect position sensing, mechanical backlash results in a falsification of the traversing distance, as, at direction reversal, the axis travels either too far or not far enough corresponding to the absolute value of the backlash.

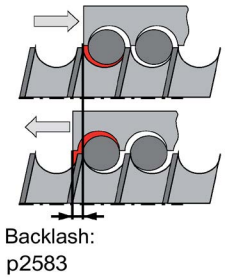

Figure 9-41 Backlash compensation

Note

Boundary conditions for backlash compensation

The backlash compensation is active under the following supplementary conditions:

- for an incremental measuring system: after the axis has been referenced (homed).
- For an absolute measuring system: after the axis has been adjusted.

In order to compensate the backlash, the determined backlash must be specified in p2583 with the correct polarity. At each direction of rotation reversal, the axis actual value is corrected dependent on the actual traversing direction and is displayed in r2667. This value is converted into the actual position value by p2516 (position offset).

If a stationary axis is referenced by setting a reference point or an adjusted axis is activated with the absolute encoder, the setting of parameter p2604 (reference point approach start direction) is relevant to activating the compensation value.

Table 9- 17 Activation of compensation value depending on p2604

p2604 (start direction)	Travel direction	Activation of the compensation value
0	positive	None
	negative	immediately
1	positive	immediately
	negative	None

Modulo offset

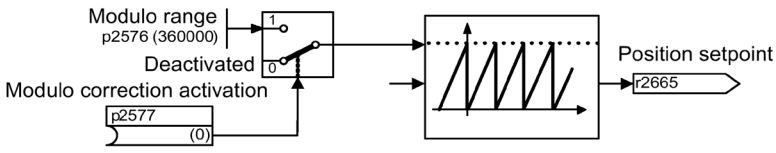

Figure 9-42 Modulo offset

A modulo axis has an unrestricted travel range. The range of values for the position repeats following a particular parameterizable value (the modulo range and/or axis cycle), e.g. following one revolution: 360° -> 0°. The modulo range is set in parameter p2576, the offset is activated with parameter p2577. The modulo offset is undertaken at the setpoint end. This is provided with the correct prefix via the connector output r2685 (offset value) in order to offset the actual position value accordingly. The offset is activated using a rising edge of binector output r2684.7 (activate offset) of the "Basic positioner" function module (r2685 (offset value) and r2684.7 (activate offset) are already linked to the corresponding binector/connector input of position actual value conditioning). Absolute positioning date (e.g. in a traversing block) must always be within the modulo range. The traversing range cannot be restricted by software limit switches.

With active modulo offset and the application of absolute encoders, as a result of potential encoder overflows, it must be ensured that there is an integer ratio v between the multiturn resolution and the modulo range.

The ratio v can be calculated as follows:

- Motor encoder without position tracking:
  v = (p0421 x p2506 x p0433 x p2505) / (p0432 x p2504 x p2576)
- Motor encoder with position tracking for measuring gear:
  v = (p0412 x p2506 x p2505) / (p2504 x p2576)
- Motor encoder with position tracking for load gear:
  v = (p2721 x p2506 x p0433) / (p0432 x p2576)
- Motor encoder with position tracking for load and measuring gear:
  v = (p2721 x p2506) / p2576
- Direct encoder without position tracking:
  v = (p0421 x p2506 x p0433) / (p0432 x p2576)
- Direct encoder with position tracking for measuring gear:
  v = (p0412 x p2506) / p2576

With position tracking it is recommended to change p0412 or p2721.

Function diagram

FP 3635	Interpolator (r0108.4 = 1)
FD 4010	Position actual value preprocessing (r0108.3 = 1)

Parameters

- p2576 EPOS modulo offset modulo range
- p2577 BI: EPOS modulo offset activation
- p2583 EPOS backlash compensation
- r2684 CO/BO: EPOS status word 2
- r2685 CO: EPOS offset value

9.4.7.2 Limitations

Description

The velocity, acceleration and deceleration can be limited and the software limit switches and STOP cams set.

The following restrictions exist:

- Velocity profile limitations
  - Maximum speed (p2571)
  - Maximum acceleration (p2572) / maximum delay (p2573)
- Traversing range limits
  - Software limit switches (p2578, p2579, p2580, p2581, p2582)
  - Hardware limit switch (p2568, p2569, p2570)
- Jerk limit
  - Jerk limitation (p2574)
  - Activation of jerk limitation (p2575)

Maximum velocity

The maximum velocity of an axis is defined using parameter p2571. The velocity should not be set to be greater than the maximum speeds in r1084 and r1087.

The drive is limited to this velocity if a higher velocity is specified or programmed via the override (p2646) for the reference point approach or is programmed in the traversing block.

Parameter p2571 (maximum velocity) defines the maximum traversing velocity in units of 1000 LU/min. Changing the maximum speed restricts the velocity of an active traversing block.

This restriction is only effective in positioning mode during:

- Jog mode
- Processing traversing blocks
- Direct setpoint specification/MDI for positioning/setting up
- Reference point approach

Maximum acceleration/delay

Parameters p2572 (maximum acceleration) and p2573 (maximum delay) define the maximum acceleration and maximum delay. The unit in both cases is 1000 LU/s^2.

Both values are relevant during:

- Jog mode
- Processing traversing blocks
- Direct setpoint specification/MDI for positioning and setting up
- Reference point approach

The parameters are of no effect if faults with the fault reactions OFF1 / OFF2 / OFF3 arise.

In the "traversing blocks" operating mode, the acceleration and/or deceleration can be set in integer steps (1 %, 2 % to 100 %) of the maximum acceleration and deceleration. In "Direct setpoint input/MDI for positioning and setting up" operating mode, the acceleration/deceleration override (assignment of 4000Hex = 100 %) is specified.

Note

Zigzag acceleration is not supported

A maximum acceleration and/or delay dependent on current velocity (zigzag acceleration) is not supported.

Note

PROFIdrive telegram 110

When using the PROFIdrive message frame 110, the velocity override is already connected and has to be supplied by the message frame.

Limiting the traversing range

The traversing range of a linear axis can be limited using either the software limit switch or the hardware limit switch (STOP cams).

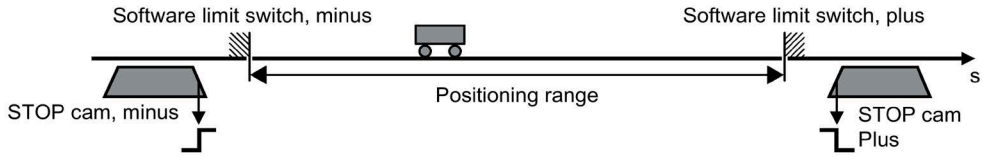

Figure 9-43 Software and hardware limit switches as limits

Activated software limit switches limit the position set value by specifying the connector input p2578 (software limit switch, minus) and p2579 (software limit switch, plus).

Activated hardware limit switches are evaluated at the converter using binector inputs p2569 (STOP cams, minus) and p2570 (STOP cams, plus).

Limiting the traversing range using software limit switches

With this procedure, the position set value of a linear axis is limited in accordance with the traversing range specified using the software limit switch.

The traversing range is only limited using software limit switches if the following requirements are met:

- The software limit switches are activated (p2582 = 1).
- The reference point is set (r2684.11 = 1).
- Modulo correction is not active (p2577 = 0).

Limiting is realized via connector input p2578 (software limit switch, minus) and p2579 (software limit switch, plus). The connector inputs, in the factory setting, are linked to the connector output p2580 (software limit switch, minus) and p2581 (software limit switch, plus). Using parameters p2580 and p2581, you can set the required end positions of the software limit switch.

Limiting the traversing range using hardware limit switches

When this procedure is used, the converter limits the traversing range of a linear axis using hardware limit switches (STOP cams).

The traversing range is only limited using hardware limit switches if the following requirements are met:

- The hardware limit switches are activated (p2568 = 1).

The signals of the hardware limit switches are evaluated using the digital outputs of the converter. There are two methods available for evaluating hardware limit switches:

- Edge-triggered evaluation (factory setting)
- Level-triggered evaluation

For limiting the traversing range using a hardware limit switch, edge-triggered evaluation has been configured as a factory setting. The signals are evaluated using binector inputs p2569 (hardware limit switch, minus) and p2570 (hardware limit switch, plus). Hardware limit

switches are "active" if the signals of the hardware limit switches are recognized as "0" at the binector inputs.

You can test the function of a hardware limit switch by approaching the hardware limit switch in **position-controlled** operation of the axis (e.g. with the "Jog" function).

Moving beyond the hardware limit switches (STOP cams)

For maintenance work, it may be necessary for the axis to traverse beyond the activated hardware limit switches (STOP cams).

To ensure the ability for the axis to traverse beyond the hardware limit switches in **position-controlled** operation, proceed as follows:

1. Deactivate the appropriate hardware limit switch (minus or plus).
2. Traverse the axis, position-controlled beyond the hardware limit switch.

NOTICE
Damaging the machine by traveling past a hardware limit switch Traveling past a hardware limit switch can damage the machine. • Monitor axis motion, and manually stop the axis in plenty of time, e.g. using an EMERGENCY STOP.

If the axis traverses beyond the hardware limit switch in **speed-controlled** operation, the following occurs:

1. When the hardware limit switch is initially approached, the converter stops the axis.
2. Depending on which direction the axis is traversing, the converter signals fault F07491 "EPOS: STOP cams, minus approached" or F07492 "EPOS: STOP cam, plus actuated".

After fault acknowledgment, it is possible for the speed-controlled axis to traverse further in the same direction over the corresponding hardware limit switch.

If the position actual value resolution is not adequate in the **speed-controlled** mode, when returning to the positioning range, the converter cannot identify whether the axis is again within the positioning range. As a consequence, the converter prevents the axis from being traversed in the position-controlled mode.

You must select the level-triggered evaluation of the hardware limit switches to guarantee position-controlled traversing of the axis, even if the position actual value resolution is not adequate.

Requirement:

- The hardware limit switch extends up to the end of the machine.

Procedure:

1. The level-triggered evaluation of the hardware limit switch is selected using p2584.01 = 1.

Jerk limit

Acceleration and deceleration can change suddenly if jerk limiting has not been activated. The diagram below shows the traversing profile when jerk limitation has not been activated.

The maximum acceleration (a_{max}) and deceleration (d_{max}) are in this case effective immediately. The drive accelerates until the target speed (v_{target}) is reached and then switches to the constant velocity phase.

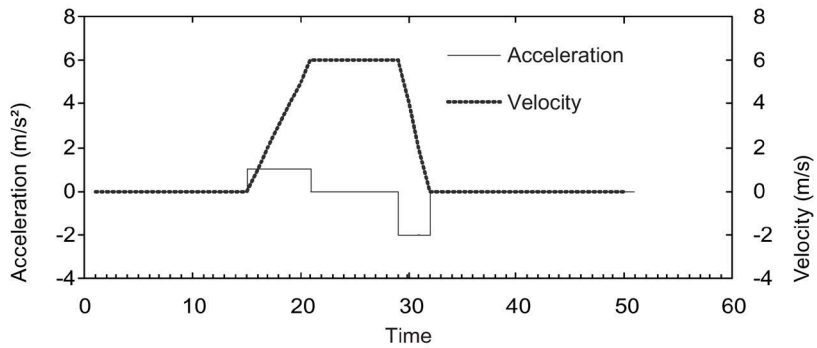

Figure 9-44 Jerk limitation deactivated

Jerk limitation can be used to achieve a ramp-like change of both variables, This ensures "smooth" acceleration and braking as shown in the diagram below. Ideally, acceleration and deceleration should be linear.

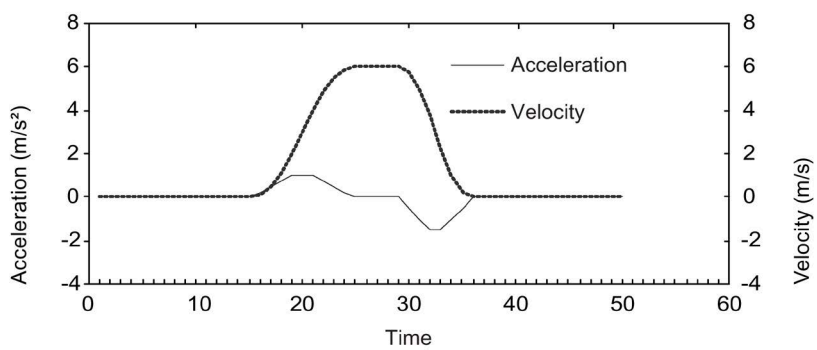

Figure 9-45 Jerk limitation activated

The maximum gradient (r_k) can be set in parameter p2574 (jerk limitation) in unit LU/s³ for both acceleration and braking. The resolution is 1000 LU/s³. To activate the limitation permanently, set parameter p2575 (Activate jerk limitation) to 1. In this case, limitation cannot be activated or deactivated in traversing block mode by means of the command "JERK" Activating/deactivating the limiting in the traversing block mode requires parameter p2575 (Activate jerk limitation) to be set to zero. The status signal r2684.6 (Jerk limitation active) indicates whether or not jerk limitation is active.

The limitation is effective for:

- Jog mode
- Processing traversing blocks
- Direct setpoint specification/MDI for positioning and setting up
- Reference point approach
- Stop responses due to alarms

Jerk limitation is not active when messages are generated with stop responses OFF1 / OFF2 / OFF3.

Starting against a closed brake

Under EPOS, if the drive should start against a closed brake, for example, for a suspended load, then the enable signal p0899.2 is briefly withdrawn. The drive pulses are canceled and fault F07490 is output.

To avoid this happening, using p1513, activate a supplementary torque which corresponds to the brake holding torque. As a result, after releasing the brake, the load cannot sag and the drive remains in closed-loop control without fault F07490 being output.

Function diagram

FD 3630 Traversing range limits (r0108.4 = 1)

Parameter

- p2571 EPOS maximum speed
- p2572 EPOS maximum acceleration
- p2573 EPOS maximum delay
- p2646 CI: EPOS velocity override

Software limit switches:

- p2578 CI: EPOS software limit switch, minus signal source
- p2579 CI: EPOS software limit switch, plus signal source
- p2580 CO: EPOS software limit switch, minus
- p2581 CO: EPOS software limit switch, plus
- p2582 BI: EPOS software limit switch activation
- r2683 CO/BO: EPOS status word 1

STOP cams:

- p2568 BI: EPOS STOP cam activation
- p2569 BI: EPOS STOP cam, minus
- p2570 BI: EPOS STOP cam, plus
- r2684 CO/BO: EPOS status word 2

Jerk limit:

- p2574 EPOS jerk limitation
- p2575 BI: EPOS jerk limitation activation

9.4.7.3 Basic positioner and safe setpoint velocity limitation

If safe speed monitoring (SLS) or the safe direction motion monitoring (SDI) is also to be used at the same time as the EPOS positioning function, EPOS must be informed about the activated monitoring limits. Otherwise these speed monitoring limits can be violated by the EPOS setpoint input. By monitoring the limit value, if violated, the drive is stopped therefore exiting the intended motion sequence. In this case, the relevant safety faults are output first, and then the sequential faults created by EPOS.

Using parameter r9733, the safety functions offer EPOS setpoint limiting values, which when taken into account, prevent the safety limit value being violated.

In order to prevent a safety limit violation by the EPOS setpoint input, you must transfer the setpoint limit value (r9733) as follows to the maximum speed setpoint of EPOS (p2594):

- p2594[1] = r9733[0]
- p2594[2] = r9733[1]

In this regard you must set the delay time for SLS/SOS (p9551), so that the relevant safety monitoring function only becomes active after the maximum required time for the speed to be reduced below the limit. This required braking time is determined by the actual speed, the jerk limit in p2574 and the maximum delay in p2573.

Parameter

- p2573 EPOS maximum delay
- p2574 EPOS jerk limitation
- p2593 CI: EPOS LU/revolution LU/mm
- p2594 CI: EPOS maximum speed, externally limited
- p9351 SI Motion SLS changeover delay time (Motor Module)
- p9551 SI Motion SLS(SG) changeover delay time (Control Unit)
- r9733 CO: SI Motion setpoint speed limit effective

9.4.7.4 Referencing

Description

Once a machine has been switched on, the absolute dimensional reference to the machine's zero point must be established for positioning purposes. This procedure is referred to as referencing.

The following types of referencing are available:

- Setting reference point (all encoder types)
- Active referencing (reference point approach (p2597 = 0), with incremental encoder):
  - Referencing cam and encoder zero mark (p2607 = 1)
  - Encoder zero mark (p0495 = 0 or p0494 = 0)
  - External zero mark (p0495 ≠ 0 or p0494 ≠ 0)
- Flying referencing (passive (p2597 = 1), with incremental encoder)
- Absolute encoder adjustment (with absolute value encoder)
- Absolute encoder adjustment with offset acceptance (with absolute encoder)
- Flying referencing (passive (p2597 = 1), with absolute encoder)

A connector input is provided to enter reference point coordinates for all types of referencing. This allows e.g. changes/input via the higher-level control. An adjustable parameter for this variable is however needed for the fixed specification of reference point coordinates. This adjustable parameter p2599 is connected to connector input p2598 as standard.

Note

No distance-coded zero marks

Referencing of distance-coded zero marks is not supported.

Set reference point

The reference point can be set using a 0/1 edge at binector input p2596 (set reference point) if no traversing commands are active and the actual position value is valid (p2658 = 1-signal). A reference point can also be set for an intermediate stop.

The current actual position of the drive is set here as the reference point using the coordinates specified by connector input p2598 (reference point coordinates). The setpoint (r2665) is adjusted accordingly.

This function also uses actual position value correction for the position controller (p2512 and p2513). Connector input p2598 is connected to adjustable parameter p2599 as standard. The binector input is not effective for the traversing task being presently executed.

Absolute encoder adjustment

When commissioning an absolute encoder for the first time, a mechanical axis position is aligned with the encoder absolute position and then the system is synchronized.

After the drive has been switched off the encoder position information is retained. This means that the axis does not have to be readjusted when the drive powers up.

Note

It is crucial that absolute encoders are adjusted the first time that they are commissioned.

Requirements

The following requirement must be satisfied before the adjustment:

- The axis is located at a defined reference position.

Procedure

1. Call the adjustment using parameter p2507 = 2.

   Please observe the following information relevant for this particular step:

   – Using the reference point coordinate in p2599, an offset value is determined and entered into p2525. The offset value is used to calculate the position actual value (r2521). Using value "3", parameter p2507 signals that the adjustment is valid. In addition, bit r2684.11 (reference point set) is set to a value of "1".

   – If the drive had identified the adjustment, then note (Alarm A7441) is displayed. The user is prompted to save the adjustment from RAM to ROM.

   – Note down the offset value that has possibly been determined so that you can enter this into p2525 when using the "Absolute encoder adjustment with offset acceptance" function.

2. Save the offset of the absolute encoder adjustment in p2525 in a non-volatile fashion (RAM to ROM).

   Please observe the following information relevant for this particular step:

   – If an adjustment is lost on an already adjusted axis, the axis will remain unadjusted even after a POWER ON of the drive unit. In this particular case, it is crucial that the axis is readjusted.

   Note

   After being commissioned for the first time, carefully ensure that the drive train and its configuration cannot be mechanically changed or modified. When mechanical changes are made, the synchronization between the encoder actual value and the machine zero is lost. In this particular case, it is crucial that the axis is readjusted.

Rotary absolute encoder

During adjustment with the rotary absolute encoder, a range is aligned symmetrically around the zero point with half the encoder range within which the position is restored after switch off/on.

If position tracking is deactivated (p2720.0 = 0), only one encoder overflow is permitted to occur in this range (for further information, see Chapter "Actual position value preparation (Page 669)").

If the reference point (p2599) is in the encoder range, the actual position value is set to the reference point during adjustment. Otherwise, adjustment is canceled with F07443.

NOTICE
Material damage caused when using the encoder outside the defined encoder range If a rotary absolute encoder is used outside the defined encoder range, then undesirable motion can occur after switching off/switching on. This can damage the machine. • After adjustment, ensure that the encoder range that has been set up is not exited. • Activate position tracking (p2720.0) if there is a risk that the encoder range is exited.

Linear absolute value encoder

No overflow occurs with linear absolute encoders, this means that the position can be restored over the entire traversing range after switching off/on once the position has been adjusted. During adjustment, the actual position value is set in line with the reference point.

Absolute encoder adjustment with offset transfer

In addition to the previously described method, the adjustment can also be carried out using the "Absolute encoder adjustment with offset acceptance" function.

Adjusting

The "Absolute encoder adjustment with offset acceptance" is realized by determining and accepting an offset value while the drive is being commissioned for the first time.

When determining the offset, the encoder actual value is aligned once with the machine zero; it is then set as being valid, and the system synchronizes to the absolute position that has been determined. It is not necessary that the axis is located at a defined reference position.

After the drive has been switched off the encoder position information is retained. This means that the axis does not have to be readjusted when the drive powers up.

Requirements

The following requirements must be satisfied before the adjustment:

- The offset value p2525 was determined when commissioning the drive for the first time.
- After being commissioned for the first time, the drive train and its configuration was not mechanically changed.

Procedure

Proceed as follows to carry out the "Absolute encoder adjustment with offset acceptance" procedure:

1. Enter the offset value, determined when commissioning the drive for the first time, into parameter p2525.
2. Call "Absolute encoder adjustment with offset acceptance" using parameter p2507 = 4 to accept the offset value and to link with the adjustment point.

   Please observe the following information relevant for this particular step:

   – The offset value is used to calculate the position actual value (r2521). Using value "3", parameter p2507 signals that the adjustment is valid. In addition, bit r2684.11 (= reference point set) is set to a value of "1".

   – The offset value is immediately accepted, and is active without the system having to be restarted. If the drive had identified the adjustment, then note (Alarm A7441) is displayed. The user is prompted to save the adjustment from RAM to ROM.
3. Save the offset of the absolute encoder adjustment in p2525 in a non-volatile fashion (RAM to ROM).

   Note

   After being commissioned for the first time, carefully ensure that the drive train and its configuration have not been mechanically changed or modified. When mechanical changes are made, the synchronization between the encoder actual value and the machine zero is lost. In this particular case, it is crucial that the axis is readjusted.

4. Check the following machine positions using a test run at a low velocity:

   – End positions

   – Software limit switch

   – Reference point

Referencing with DRIVE-CLiQ encoders

DRIVE-CLiQ encoders are available as either a "multiturn" or "singleturn" absolute encoders. If the "referencing" function is selected via the PROFIdrive encoder interface and if a DRIVE-CLiQ encoder or other type of absolute encoder is connected via the DRIVE-CLiQ interface, the zero crossing of the singleturn position is used as the reference point.

Reference point approach of incremental measuring systems

The reference point approach (when using an incremental measuring system) is used to move the drive to its reference point. The entire referencing cycle is controlled and monitored by the drive.

Incremental measuring systems require the absolute dimensional reference to the machine's zero point to be established once a machine has been switched on. When switching on, the position actual value x_0 in the non-referenced state is set to $x_0 = 0$. The reference point approach can be used to move the drive to its reference point in a reproducible manner. The geometry with a positive start direction (p2604 = "0") is shown below.

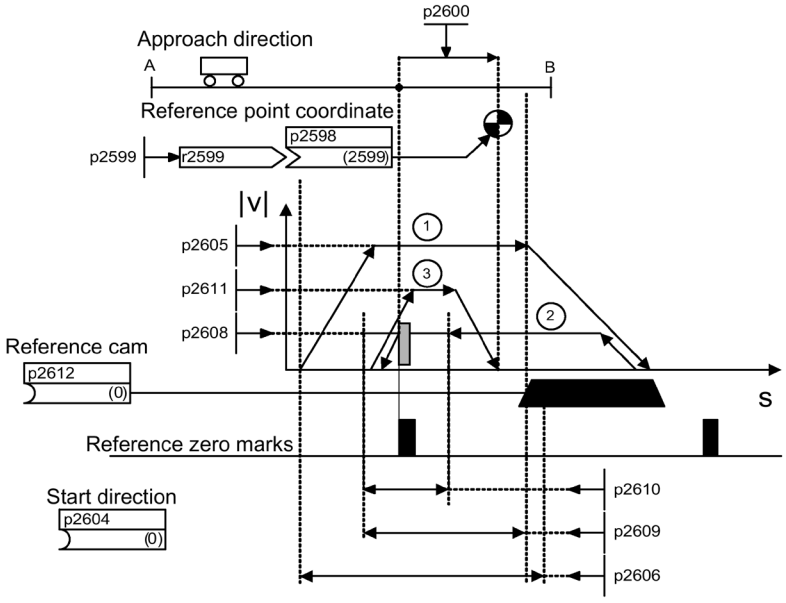

Figure 9-46 Example: reference point approach with reference cam

The signal at binector input p2595 (start referencing) is used to trigger travel to the reference cam (p2607 = 1) if a reference point approach is selected at the same time (0 signal at binector input p2597 (select referencing type)). The signal in binector input p2595 (start referencing) must be set during the entire referencing process otherwise the process is aborted. Once started, the status signal r2684.11 (reference point set) is reset.

During the entire reference point approach, monitoring of the software limit switches is inactive; only the maximum traversing range is checked. If necessary, monitoring of the software limit switch is reactivated after completion.

The velocity override set is only effective during the search for the reference cam (step 1). This ensures that the "cam end" and "zero mark" positions are always overrun at the same speed. If signal propagation delays arise during switching processes, this ensures that the offset caused during establishment of position is the same in each referencing process.

Axes that only have one zero mark over their entire traversing and/or modulo range are identified using parameter p2607 = 0 (reference cam present). After starting the referencing process, synchronization to the reference zero marks is started straight away (see step 2) for these axes.

Reference point approach, step 1: travel to reference cam

If there is no reference cam (p2607 = 0), then go to step 2.

When the referencing process is started, the drive accelerates at maximum acceleration (p2572) to the reference cam approach velocity (p2605). The direction of the approach is determined by the signal of binector input p2604 (reference point approach start direction).

The drive is informed that the reference cam has been reached by the signal at binector input p2612 (reference cam). The drive is then decelerated to a standstill using the maximum delay (p2573).

If a signal at binector input p2613 (reversing cam, MINUS) or at binector input p2614 (reversing cam, PLUS) is detected during reference point approach, the search direction is reversed.

If the "reversing cam, MINUS" is approached in the positive direction, or the "reversing cam, PLUS" is approached in the negative direction, fault F07499 (EPOS: reversing cam approached with the incorrect traversing direction) is output. In this case, the wiring of the reversing cam (p2613, p2614) and/or the traversing direction for approaching the reversing cam must be checked.

The reversing cams are low active. If both reversing cams are active (p2613 = "0" and p2614 = "0"), then the drive remains stationary. As soon as the reference cam is found, then synchronization to the reference zero mark is immediately started (refer to step 2).

If the axis leaves its start position and travels the distance defined in parameter p2606 (max. distance to reference cam) heading towards the reference cam without actually reaching the reference cam, the drive remains stationary and fault F07458 (reference cam not found) is issued.

When starting the referencing process, if the axis is already at the cam, it does not have to travel to the reference cam and instead synchronization to the reference zero mark is started straight away (see step 2).

Note

The velocity override is effective during the search for the cam. By changing the encoder data set, status signal r2684.11 (reference point set) is reset.

The cam switch must be able to delivery both a rising and a falling edge.

For a reference point approach with evaluation of the encoder zero mark, for increasing actual position values, the 0/1 edge is evaluated and for decreasing actual position values, the 1/0 edge. Inversion of the edge evaluation is not possible at the sensor zero mark.

If the length measuring system has several zero marks which repeat at cyclic intervals (e.g. incremental, rotary measuring system), you must ensure that the cam is adjusted so that the same zero mark is always evaluated.

The following factors may impact on the characteristics of the "reference cam" control signal:

- Switching accuracy and time delay of reference cam switch
- Position controller cycle of drive
- Interpolation cycle of drive
- Temperature sensitivity of machine’s mechanical system

Reference point approach, step 2: Synchronization to reference zero mark (encoder zero mark or external zero mark)

Reference cam available (p2607 = 1):

In step 2, the drive accelerates to the velocity specified in p2608 (zero mark approach velocity) in the direction opposite to that specified by binector input p2604 (reference point approach start direction). The zero mark is expected at distance p2609 (max. distance to zero mark). The search for the zero mark is active (status bit r2684.0 = "1" (reference point approach active)) as soon as the drive leaves the cam (p2612 = "0") and is within the tolerance band for evaluation (p2609 - p2610). If the position of the zero mark is known (encoder evaluation), the actual position of the drive can be synchronized using the zero mark.

The drive starts the reference point approach (see step 3). The distance traveled between the cam end and zero mark is displayed in parameter r2680 (difference between cam and zero mark).

- **Encoder zero mark available (p0494 = 0 or p0495 = 0), no reference cam (p2607 = 0):**

  Note

  Differentiation between p0494 and p0495

  Parameter p0494 corresponds to parameter p0495 regarding its significance. In addition, parameter p0494 is dependent on an encoder data set; for example which can be used for the data set switchover for interchangeable machining heads.

  Synchronization to the reference zero mark begins as soon as the signal at binector input p2595 (start referencing) is detected. The drive accelerates to the velocity, specified in parameter p2608 (zero mark approach velocity) in the direction specified by the signal of binector input p2604 (reference point approach start direction).

  The drive synchronizes to the first zero mark. and then starts to travel towards the reference point (see step 3).

  Note

  In this case the direction of approach to the encoder zero mark is the opposite to the axes with reference cams!

- **External zero mark available (p0494 ≠ 0 or p0495 ≠ 0), no reference cams (p2607 = 0):**

  Synchronization to an external zero mark begins as soon as the signal at binector input p2595 (start referencing) is detected. The drive accelerates to the velocity, specified in parameter p2608 (zero mark approach velocity) in the direction specified by the signal of binector input p2604 (reference point approach start direction).

  The drive synchronizes to the first external zero mark (p0494 or p0495). The drive continues to travel with the same velocity and travel is started to the reference point (refer to step 3).

  Note

  The velocity override is not active.
  Parameter p0494 or p0495 (equivalent zero mark at input terminal) can be used to set an equivalent zero mark and to select the corresponding digital input. As standard, for increasing actual position values, the 0/1 edge is evaluated and for decreasing actual position values, the 1/0 edge. This can be inverted for an equivalent zero mark using parameter p0490 (measurement probe or equivalent zero mark).

Reference point approach, step 3: travel to reference point

Travel to the reference point is started when the drive has successfully synchronized to the reference zero mark (see step 2). Once the reference zero mark has been detected, the drive accelerates on-the-fly to the reference point approach velocity set in parameter p2611. The drive moves through the reference point offset (p2600), i.e. the distance between the zero mark and reference point.

Once the axis has reached the reference point, the actual and setpoint position values are set to the value specified via connector input p2598 (reference point coordinates) (connector input p2598 is linked to adjustable parameter p2599 as default setting). The axis is then referenced and the status signal r2684.11 (reference point set) set.

Note

The velocity override is not active during this process.
If the braking distance is greater than the reference point offset or if a change of direction is needed due to the set reference point offset, then the drive first brakes to a standstill once the reference zero mark has been detected and then moves backwards.

Flying referencing

Inaccuracies in the actual value acquisition are compensated with flying referencing. This increases the load-side positioning accuracy.

The "on-the-fly referencing" mode (also known as post-referencing), which is selected using a "1" signal at binector input p2597 (select referencing type), can be used in every mode (jogging, traversing block and direct setpoint input for positioning/setup) and is superimposed on the currently active mode. Flying referencing can be selected both with incremental and absolute measuring systems.

With "flying referencing" during incremental positioning (relative), you can select whether the offset value is to be taken into account for the travel path or not (p2603).

"Flying referencing" is activated by a 0/1 edge at binector input p2595 (start referencing). The signal in binector input p2595 (start referencing) must be set during the entire referencing process otherwise the process is aborted.

Status bit r2684.1 (passive/flying referencing active) is linked with binector input p2509 (activate measurement probe evaluation). It activates measurement probe evaluation. Binector inputs p2510 (measurement probe selection) and p2511 (measurement probe edge evaluation) can be used to set which measurement probe (1 or 2) and which measurement edge (0/1 or 1/0) is to be used.

The probe pulse is used to supply connector input p2660 (referencing/homing measured value) with the measured value via parameter r2523. The validity of the measurement is reported to binector input p2661 (measurement valid feedback) via r2526.2.

Note

The following must always apply to the "Flying referencing mode" windows:
p2602 (outer window) > p2601 (inner window).

See function diagram 3614 for more information on the "Flying referencing mode" function.

The following then happens:

- If the drive has not yet been referenced, status bit r2684.11 (reference point set) is set to "1".
- If the drive has already been referenced, status bit r2684.11 (reference point set) is not reset when starting flying referencing.
- If the drive has already been referenced and the position difference is less than the inner window (p2601), the old actual position value is retained.
- If the drive has already been referenced and the position difference is more than the outer window (p2602), alarm A07489 (reference point offset outside window 2) is output and the status bit r2684.3 (pressure mark outside window 2) set. No offset to the actual position value is undertaken.
- If the drive has already been referenced and the position difference is more than the inner window (p2601) and less that the outer window (p2602), the actual position value is offset.

Note

Flying referencing is not an active operating mode. It is superimposed by an active operating mode.

In contrast to reference point approach, flying referencing can be carried out superimposed by the machine process.

As standard, for flying referencing, measuring probe evaluation is used; when enabled, the measuring probe is selected (p2510) and the edge evaluation (p2511) (in the factory setting, measuring probe 1 is always the measuring probe, flank evaluation in the factory setting is always the 0/1 edge).

Instructions for switching data sets

Using drive data set changeover (DDS), motor data sets (MDS, p0186) and encoder data sets (EDS, p0187 to p0189) can be changed over. The following table shows when the reference bit (r2684.11) or the status of the adjustment with absolute encoders (p2507) is reset.

In the following cases, when a DDS changeover takes place, the actual position value becomes invalid (p2521 = 0) and the reference point (r2684.11 = 0) is reset:

- The encoder data set (EDS) that is effective for the position control changes.
- The encoder assignment changes (p2502).
- The mechanical conditions change (p2503 to p2506).

With absolute encoders, the status of the adjustment (p2507) is also reset, if the same absolute encoder is selected for the position control although the mechanical conditions have changed (p2503 to p2506).

In operating mode, a fault (F07494) is also output.

The following table contains a few examples for data set switching. The initial data set is always DDS0.

Table 9- 18 DDS switch without load gear position tracking

DDS	**0**	**1**	**2**	**3**	**4**	**5**	**6**	**7**
p0186 (MDS)	0	0	0	0	0	1	2	3
p0187 (encoder 1)	EDS0	EDS0	EDS0	EDS0	EDS0	EDS4	EDS5	EDS0
p0188 (encoder 2)	EDS1	EDS1	EDS1	EDS1	EDS3	EDS1	EDS6	EDS1
p0189 (encoder 3)	EDS2	EDS2	EDS2	EDS2	EDS2	EDS2	EDS7	EDS2
p2502 (encoder for position control)	Encod-er_1	Encod-er_1	Encod-er_1	Encod-er_2	Encod-er_2	Encod-er_1	Encod-er_1	Encod-er_1
Mechanical relationships p2504/p2505/p2506/p2503 A, B and D designate differ-ent mechanical relationships.	A	A	B	A	A	A	D	A
Load gear position tracking	Deac-tivated	Deac-tivated	Deac-tivated	Deac-tivated	Deac-tivated	Deac-tivated	Deac-tivated	Deac-tivated

Table 9- 19 DDS changeover response

DDS	Changeover response
0	-
1	Switchover during pulse inhibit or operation has no effect
2	Pulse inhibit: Position actual value processing is reinitiated [1] and reference bit [2] is reset. Operation: Fault is output. Position actual value processing is reinitiated [1] and reference bit [2] is reset.
3 - 6	Pulse inhibit: Position actual value processing is reinitiated [1] and reference bit [3] is reset. Operation: Fault is output. Actual position value processing is re-initiated [1] and reference bit [3] is reset.
7	MDS changeover alone during pulse inhibit or operation has no effect

[1] "Is reinitiated" means: For absolute encoders, the absolute value is read out anew and for incremental encoders a restart is performed just like after a POWER ON.

[2] For incremental encoders r2684.11 ("Reference point set") is reset, and additionally for absolute encoders the status of adjustment (p2507).

[3] For incremental encoders r2684.11 ("Reference point set") is reset, and for absolute encoders the status of adjustment (p2507) is not additionally reset, as the encoder data set is different from the original.

Function diagram

FP 3612	Referencing/reference point approach mode (r0108.4 = 1) (p2597 = 0 signal)
FP 3614	Flying referencing mode (r0108.4 = 1) (p2597 = 1 signal)

Parameters

- p0494[0...n] Equivalent zero mark, input terminal [1]
- p0495 Equivalent zero mark, input terminal [1]
- p2596 BI: EPOS set reference point
- p2597 BI: EPOS referencing type selection
- p2598 CI: EPOS reference point coordinates signal source
- p2599 CO: EPOS reference point coordinates value
- p2600 EPOS reference point approach, reference point offset

[1] As far as its significance is concerned, parameter p0494 corresponds to parameter p0495. In addition, parameter p0494 is dependent on an encoder data set; for example which can be used for the data set switchover for interchangeable machining heads.

9.4.7.5 Referencing with several zero marks per revolution

The drive detects several zero marks per revolution when using reduction gears or measuring gears. In this cases, an additional BERO signal allows the correct zero mark to be selected.

Example with a reduction gear

The diagram shows an application example for referencing with several zero marks per revolution and selecting the correct zero mark using a BERO signal.

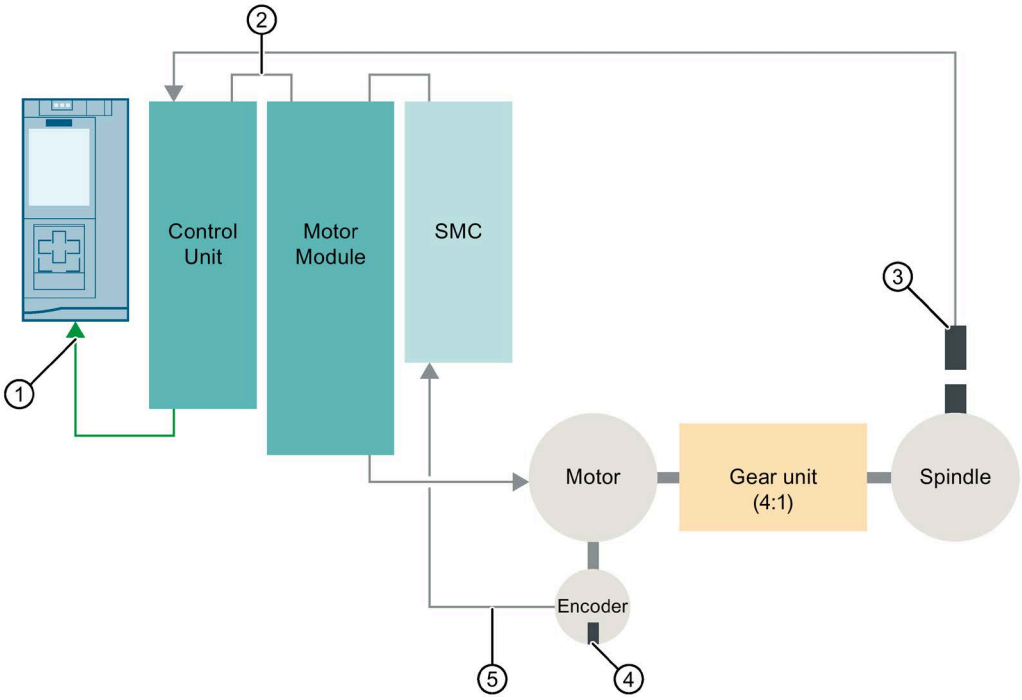

① PROFIdrive encoder interface on the higher-level control system
② DRIVE-CLiQ
③ BERO (contactless proximity switch)
④ Zero mark
⑤ Position signal

Figure 9-47 Design with a gear between the motor and load

By using a reduction gear between the motor and the load, the drive detects several revolutions of the motor per mechanical revolution of the load - and therefore also several encoder zero marks.

The higher-level control/position control when referencing requires a unique reference between the encoder zero mark and the machine axis (load). This is the reason that the "correct" zero mark is selected using a BERO signal.

Example with a measuring gear

The diagram shows an application example for referencing with several zero marks per revolution with a measuring gear located between the motor/load and encoder.

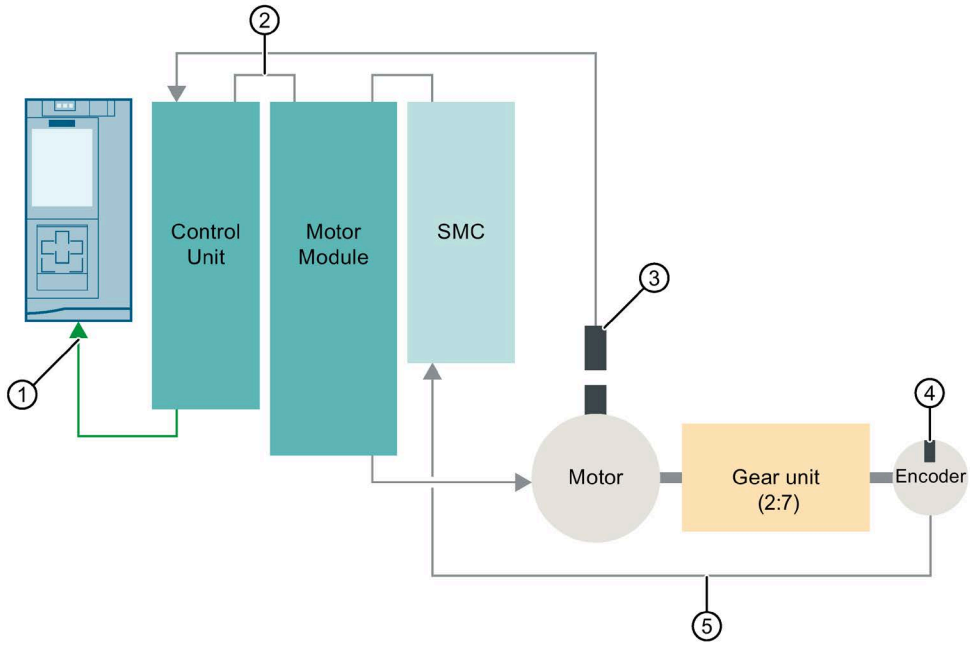

① PROFIdrive encoder interface on the higher-level control system
② DRIVE-CLiQ
③ BERO (contactless proximity switch)
④ Zero mark
⑤ Position signal

Figure 9-48 Configuration with measuring gear between the motor and encoder

As a result of the measuring gear, several encoder zero marks appear within one motor/load revolution. Using the BERO signal, the correct zero mark for referencing can be selected from the several encoder zero marks.

Requirements

- The position of the zero mark that has the shortest distance to the position when the BERO signal switches is to be determined.
- The appropriate mechanical preconditions must be fulfilled when mounting the BERO.
- Preferred mechanical configuration

  The BERO signal covers the zero mark, as in this case, the zero mark selection is independent of the direction of rotation.
- In order to be able to precisely determine the position of the BERO (in relation to the reference position of the encoder) even at higher speeds, this must be connected to a fast Control Unit input.

Evaluating the BERO signal

The positive or the negative edge of the BERO signal can be evaluated:

- Positive edge (factory setting)

  For referencing with a positive edge evaluation of the BERO signal, the encoder interface supplies the position of that reference mark, which is directly detected after the positive edge of the BERO signal. If, mechanically, the BERO is sized in such a way that the BERO signal covers the entire width of the encoder zero mark, the required encoder zero mark will be reliably detected in both traversing directions.

- Negative edge

  For referencing with a negative edge evaluation of the BERO signal, synchronization is realized to the next reference mark after leaving the BERO signal.

Setting referencing

Proceed as follows to parameterize referencing with several zero marks:

1. Using parameter p0493, define the fast digital input to which the BERO is connected.
2. Set the corresponding bit of parameter p0490 to 1.

   The signal inversion means that the evaluation uses the negative edge of the BERO signal.

Referencing procedure

Referencing proceeds as follows:

1. Via the PROFIdrive encoder interface, the drive receives the request for a reference mark search.
2. Using the parameterization, the drive determines the zero mark depending on the BERO signal.
3. The drive provides the (possibly corrected) zero mark position as reference mark via the PROFIdrive encoder interface.

Note

At high speeds or if the distance between the BERO signal and the following zero mark is too low, then it is possible that the required, next zero mark is not detected, but instead, a subsequent one due to the computation time involved. Due to the known zero mark distance, in this particular case, the determined position is correspondingly corrected.

When using a measuring gear, the zero mark position depends on the motor revolution. In this case, a correction is also performed and for each motor revolution a reverse calculation is made back to the position of the zero mark with the shortest distance between the BERO signal and the zero mark.

Parameter

- p0488 Probe 1, input terminal
- p0489 Probe 2, input terminal
- p0493 Zero mark selection, input terminal
- p0495 Equivalent zero mark, input terminal
- p0580 Probe, input terminal
- p0680[0...7] Central probe, input terminal
- p2517[0...2] LR direct probe 1
- p2518[0...2] LR direct probe 2

9.4.7.6 Safely referencing under EPOS

Basic positioning with safe referencing

Some safety functions (e.g. SLP, SP) require safe referencing. If EPOS is active at a drive, when referencing using EPOS, then the absolute position is also automatically transferred to the Safety Integrated Functions.

The Safety Integrated Functions only evaluate the absolute position if a safety function is parameterized, which requires an absolute value, e.g. SLP.

The following are examples for a load-side position calculation, depending on various encoder mounting versions and axis types.

Example 1:

Safety Integrated Extended Functions monitor the rotating load. EPOS and Safety Integrated Extended Functions use the same rotary encoder at the motor. The rotating load is coupled to the motor via a gear. The speed/position values of the spindle are calculated.

- p2506 = 360000 => a position of 360000LU (r2521) corresponds to 360° (r9708)
- p2506 = 10000 => a position of 10000LU (r2521) corresponds to 360° (r9708)

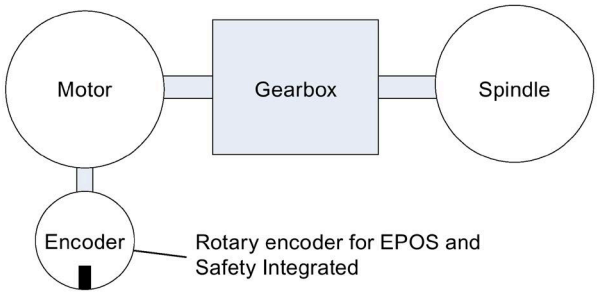

Figure 9-49 Example 1: Rotary encoder for EPOS and Safety Integrated

The ratio for the gearbox used must be parameterized in p9521/p9522 for Safety Integrated Extended Functions and in p2504/p2505 for EPOS.

For a gearbox to convert from 2 motor revolutions to 1 load revolutions, set:

- p9521 = 1
- p9522 = 2
- p2504 = 2
- p2505 = 1

Example 2:

Safety Integrated Extended Functions monitors the linear axis using the rotating motor encoder.
EPOS references using the linear scale.

- p2503 = 100000 => a position of 100000LU (r2521) corresponds to 10 mm (r9708)
- p2503 = 10000 => a position of 10000LU (r2521) corresponds to 10 mm (r9708)

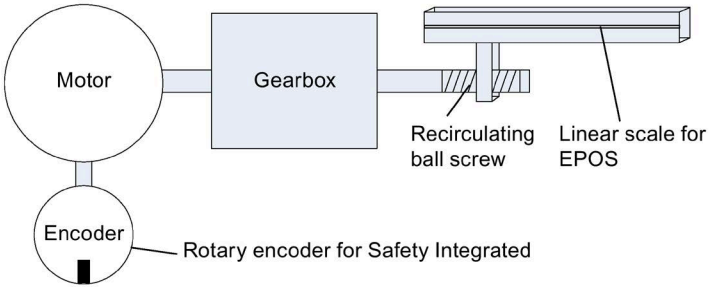

Figure 9-50 Example 2: Rotary encoder for Safety Integrated, linear scale for EPOS

Safety Integrated Extended function uses the rotating motor encoder. The gearbox is parameterized using p9521/p9522. The spindle pitch is parameterized in p9520. To calculate the load-side absolute position, EPOS directly uses the load-side linear scale. In this example, EPOS does not have to take into account the gearbox ratio and spindle pitch.

Example 3:

Safety Integrated Extended Functions monitor the linear axis using the rotating motor encoder. EPOS referenced using the same rotary motor encoder.

- p2506 = 10000, p9520 = 5 mm/revolution => a position of 10000LU (r2521) corresponds to 5 mm (r9708)
- p2506 = 5000, p9520 = 5 mm/revolution => a position of 10000LU (r2521) corresponds to 10 mm (r9708)

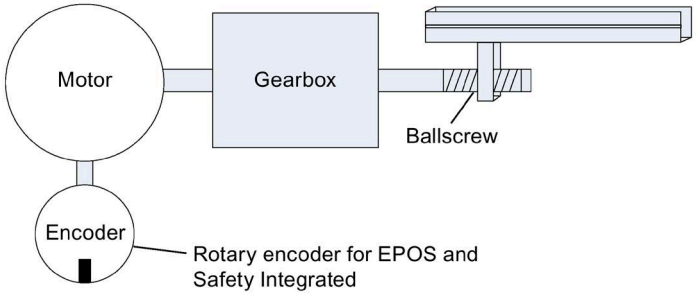

Figure 9-51 Example 3: Rotary encoder for EPOS and Safety Integrated

Using the spindle pitch parameterized in parameter p9520, rotary motion is converted into linear motion. EPOS does not take into account spindle pitch. Instead, the LUs are defined in the number of load revolutions in p2506. The load revolutions refer to the movement of the ball screw, that is, the motion after the gearbox. The ratio for the gearbox used must be parameterized in p9521/p9522 for Safety Integrated Extended Functions and in p2504/p2505 for EPOS.

For a gearbox to convert from 4 motor revolutions to 3 load revolutions, set:

- p9521 = 3
- p9522 = 4
- p2504 = 4
- p2505 = 3

Flying referencing using Safety Integrated Extended Functions

Flying referencing is frequently used to compensate for any inaccuracies in the actual value sensing, and therefore to optimize positioning accuracy on the load side. The Safety Integrated Extended Functions have lower accuracy requirements than the control. For Safety Integrated Extended Functions, cyclic adjustment is not necessary.

The initial activation signal initiates referencing. If, at the next switching signal, it is detected that the "referenced" state already exists, then no new reference position is transferred to Safety Integrated Functions.

9.4.7.7 Traversing blocks

Description

Up to 64 different traversing blocks can be saved. The maximum number is set using parameter p2615 (maximum number of traversing blocks).

All parameters which describe a traversing task are effective during a block change after the following events:

- If the corresponding traversing block number is selected using binector inputs p2625 to p2630 (block selection bits 0...5) and is started using the signal at binector input p2631 (activate traversing task).
- If a block change is made in a sequence of traversing tasks.
- If an external block change p2632 (external block change) is triggered.

Parameter sets

Traversing blocks are parameterized using parameter sets that have a fixed structure:

- Traversing block number (p2616[0...63])
  Each traversing block must have a traversing block number assigned to it. The traversing blocks are executed in the sequence of the traversing block numbers. Numbers containing the job number "-1" are ignored, which means that the space can be reserved for subsequent traversing blocks, for example.
- Task (p2621[0...63])
  1: POSITIONING
  2: FIXED ENDSTOP
  3: ENDLESS_POS
  4: ENDLESS_NEG
  5: WAIT
  6: GOTO
  7: SET_O
  8: RESET_O
  9: JERK
- Motion parameters
  - Target position or traversing distance (p2617[0...63])
  - Velocity (p2618[0...63])
  - Acceleration override (p2619[0...63])
  - Deceleration override (p2620[0...63])
- Task mode (p2623[0...63])
  Processing a traversing task can be influenced by the parameter p2623 (task mode).
  Value = 0000 cccc bbbb aaaa
  - aaaa: Identifiers
    000x → hide/show block (x = 0: show, x = 1: hide)
    A hidden block cannot be selected binary-coded via binector inputs p2625 to p2630.
    An alarm is output if you attempt to do so.

– bbbb: Continuation condition
  0000, END: 0/1 edge at p2631
  0001, CONTINUE_WITH_STOP:
  The exact position parameterized in the block is approached (brake to standstill and positioning window monitoring) before block processing can continue.
  0010, CONTINUE_ON_THE_FLY:
  The system switches to the next traversing block "on the fly" when the braking point for the current block is reached (if the direction needs to be changed, this does not occur until the drive stops within the positioning window).
  0011, CONTINUE_EXTERNAL:
  Same as "CONTINUE_ON_THE_FLY", except that an immediate block change can be triggered up to the braking point by a 0/1 edge. The 0/1 edge can be triggered via binector input p2633 when p2632 = 1 or via the measuring probe input p2661, which is connected to parameter r2526.2 of the "position control" function module, when p2632 = 0. Position detection via the measuring input can be used as an accurate starting position for relative positioning. If an external block change is not triggered, a block change is triggered at the braking point.
  0100, CONTINUE_EXTERNAL_WAIT
  Control signal "External block change" can be used to trigger a flying changeover to the next task at any time during the traversing phase. If "External block change" is not triggered, the axis remains in the parameterized target position until the signal is issued. The difference here is that with CONTINUE_EXTERNAL, a flying changeover is carried out at the braking point if "External block change" has not been triggered, while here the drive waits for the signal in the target position.
  0101, CONTINUE_EXTERNAL_ALARM
  This is the same as CONTINUE_EXTERNAL_WAIT, except that alarm A07463 "External traversing block change in traversing block x not requested" is output when "External block change" is not triggered by the time the drive comes to a standstill. The alarm can be converted to a fault with a stop response so that block processing can be canceled if the control signal is not issued.

– cccc: Positioning mode
  The POSITION task (p2621 = 1) defines how the position specified in the traversing task is to be approached.
  0000, ABSOLUTE:
  The position specified in p2617 is approached.
  0001, RELATIVE:
  The axis is traversed along the value specified in p2617
  0010, ABS_POS:
  For rotary axes with modulo offset only. The position specified in p2617 is approached in a positive direction.
  0011, ABS_NEG:
  For rotary axes with modulo offset only. The position specified in p2617 is approached in a negative direction.

- Task parameter (command-dependent significance) (p2622[0...63])

Intermediate stop and reject traversing task

The intermediate stop is activated by a 0 signal at p2640. After activation, the system brakes with the parameterized deceleration value (p2620 or p2645).

The current traversing task can be rejected by a 0 signal at p2641. After activation, the system brakes with the maximum deceleration (p2573).

The "intermediate stop" and "reject traversing task" functions are only effective in "traversing blocks" and "direct setpoint input/MDI" modes.

POSITIONING

The POSITIONING task initiates motion. The following parameters are evaluated:

- p2616[x]: Block number
- p2617[x]: Position
- p2618[x]: Velocity
- p2619[x]: Acceleration override
- p2620[x]: Deceleration override
- p2623[x]: Task mode

The task is executed until the target position is reached. If, when the task is activated, the drive is already located at the target position, then for the block change enable (CONTINUE_ON-THE-FLY or CONTINUE_EXTERNAL, the text task is selected in the same interpolation clock cycle. For CONTINUE_WITH_STOP, the next block is activated in the next interpolation clock cycle. CONTINUE_EXTERNAL_ALARM causes a message to be output immediately.

FIXED STOP

The FIXED STOP task triggers a traversing movement with reduced torque to fixed stop.

The following parameters are relevant:

- p2616[x]: Block number
- p2617[x]: Position
- p2618[x]: Velocity
- p2619[x]: Acceleration override
- p2620[x]: Deceleration override
- p2623[x]: Task mode
- p2622[x]: Task parameter, clamping torque [0.01 Nm] for rotary motors or clamping force in [0.01 N] for linear motors.

Possible continuation conditions include END, CONTINUE_WITH_STOP, CONTINUE_EXTERNAL, CONTINUE_EXTERNAL_WAIT.

ENDLESS POS, ENDLESS NEG

Using these tasks, the axis is accelerated to the specified velocity and is moved until one of the following conditions is fulfilled:

- A software limit switch is reached.
- A STOP cam signal has been issued.
- The traversing range limit is reached.
- Motion is interrupted using control signal "no intermediate stop / intermediate stop" (p2640).
- Motion is interrupted using control signal "do not reject traversing task / reject traversing task" (p2641).
- An external block change is triggered (with the appropriate continuation condition).

The following parameters are relevant:

- p2616[x]: Block number
- p2618[x]: Velocity
- p2619[x]: Acceleration override
- p2623[x]: Task mode

All continuation conditions are possible.

JERK

Jerk limitation can be activated (command parameter = 1) or deactivated (task parameter = 0) using the JERK task. The signal at the binector input p2575 "Active jerk limitation" must be set to zero. The value parameterized in "jerk limit" (p2574) is the jerk limit.

A precise stop is always carried out here regardless of the parameterized continuation condition of the task preceding the JERK task.

The following parameters are relevant:

- p2616[x]: Block number
- p2622[x]: Task parameter = 0 or 1

All continuation conditions are possible.

WAITING

The WAIT task can be used to define a waiting period which should expire before the next task is executed.

The following parameters are relevant:

- p2616[x]: Block number
- p2622[x]: Task parameter = delay time in milliseconds ≥ 0 ms
- p2623[x]: Task mode

The delay time is entered in milliseconds - but is rounded-off to a multiple of the interpolator clock cycles p0115[5]. The minimum delay time is one interpolation clock cycle; this means that if a delay time is parameterized which is less than an interpolation clock cycle, then the system waits for one interpolation clock cycle.

Example:

- Delay time: 9 ms
- Interpolation cycle: 4 ms
- Effective delay time: 12 ms

A precise stop is always carried out there before the wait time, regardless of the parameterized continuation condition of the order preceding the WAIT task. The WAIT task can be executed by an external block change.

Possible continuation conditions include END, CONTINUE_WITH_STOP, CONTINUE_EXTERNAL, CONTINUE_EXTERNAL_WAIT, and CONTINUE_EXTERNAL_ALARM. The alarm or fault is triggered when "External block change" has still not been issued after the delay time has elapsed.

GOTO

Using the GOTO task, jumps can be executed within a sequence of traversing tasks. The block number which is to be jumped to must be specified as task parameter. No continuation conditions are permitted. If there is a block with this number, then alarm A07468 (jump destination does not exist in traversing block x) is output and the block is designated as being inconsistent.

The following parameters are relevant:

- p2616[x]: Block number
- p2622[x]: Task parameter = next task number

Any two of the tasks SET_O, RESET_O and GOTO can be processed in an interpolation cycle and a subsequent POSITION and WAIT task can be started.

SET_O, RESET_O

Tasks SET_O and RESET_O allow up to two binary signals (output 1 or 2) to be simultaneously set or reset. The number of the output (1 or 2) is specified bit-coded in the task parameter.

The following parameters are relevant:

- p2616[x]: Block number
- p2622[x]: Task parameter = output (bit encoded):
  0x1: Output 1
  0x2: Output 2
  0x3: Output 1 + 2

Possible continuation conditions are END, CONTINUE_ON-THE-FLY and CONTINUE_WITH_STOP, and CONTINUE_EXTERNAL_WAIT.

The binary signals (r2683.10 (output 1) (or r2683.11 (output 2)) can be assigned to digital outputs.

Any two of the SET_O, RESET_O and GOTO orders can be processed in an interpolation cycle and a subsequent POSITION and WAIT order can be started.

Function diagram

FP 3616 Traversing blocks mode (r0108.4 = 1)

Parameters

- p2616 EPOS traversing block, block number
- p2617 EPOS traversing block, position
- p2618 EPOS traversing block, velocity
- p2619 EPOS traversing block, acceleration override
- p2620 EPOS traversing block, delay override
- p2621 EPOS traversing block, order
- p2622 EPOS traversing block, order parameter
- p2623 EPOS traversing block, order mode
- p2625 BI: EPOS block selection, bit 0
- p2626 BI: EPOS block selection, bit 1
- p2627 BI: EPOS block selection, bit 2
- p2628 BI: EPOS block selection, bit 3
- p2629 BI: EPOS block selection, bit 4
- p2630 BI: EPOS block selection, bit 5

9.4.7.8 Traversing to fixed stop

Description

The "Travel to fixed stop" function can be used, for example, to traverse spindle sleeves to a fixed stop against the workpiece with a predefined torque. In this way, the workpiece can be securely clamped. The clamping torque can be parameterized in the traversing task (p2622). An adjustable monitoring window for the fixed stop prevents the drive from traveling beyond the window if the fixed stop would break away.

In positioning mode, traversing to a fixed stop is started when a traversing block is processed with the FIXED STOP command. In addition to the dynamic parameters of position, velocity, acceleration override and deceleration override, the required clamping torque can be specified as task parameter (p2622) in this traversing block. From the start position onwards, the target position is approached with the parameterized speed. The fixed stop (the workpiece) must be between the start position and the braking point of the axis; that is, the target position is placed inside the workpiece.

The preset torque limit is effective from the start, i.e. traversing to fixed stop also occurs with a reduced torque. The preset acceleration and deceleration overrides and the actual speed override are also effective. Dynamic following error monitoring (p2546) in the position controller is not effective when traveling to the fixed stop. As long as the drive travels to the fixed stop or is in fixed stop, the status bit r2683.14 (Travel to fixed stop active) is set.

Fixed stop reached

As soon as the axis comes into contact with the mechanical fixed stop, the closedloop control in the drive raises the torque so that the axis can move on. The torque increases up to the value specified in the task and then remains constant. The status bit r2683.12 (Fixed stop reached) is set depending on the binector input p2637 (Fixed stop reached):

- If the following error exceeds the value set in parameter p2634 (fixed stop: maximum following error) (p2637 = r2526.4).
- If the state is triggered externally by the signal at binector input p2637 (fixed stop reached) (p2637 ≠ r2526.4)

In travel to fixed stop, the clamping torque or clamping force in the traversing block is configured via the task parameter. It is specified in the units 0.01 Nm (rotary motor) or 1 N (linear motor). The function module is coupled to the torque limit of the basic system via the connector output r2686[0] (torque limit upper) or r2686[1] (torque limit lower), which are connected to the connector input p1528 (torque limit upper scaling) or p1529 (torque limit lower scaling).

The connector outputs r2686[0] (torque limit, upper) and r2686[1] (torque limit, lower) are set to 100 % when fixed stop is not active. During an active fixed stop, r2686[0] (upper torque limit) or r2686[1] (lower torque limit) are evaluated as p1522/p1523 in such a way that a limitation to the predefined clamping torque is applied.

When the fixed stop is acknowledged (p2637), the "Speed setpoint total" (p2562) is recorded, as long as the binector input p2553 (fixed stop reached message) is set. The speed control holds the target torque on the basis of the available speed setpoint. The target torque is output for diagnosis via the connector output r2687 (torque setpoint).

If the parameterized clamping torque or the clamping force is reached at the fixed stop, the status bit r2683.13 (fixed stop clamping torque reached) is set.

Once the "fixed stop reached" status has been detected, the traversing task "traverse to fixed stop" is ended. Block relaying is carried out in accordance with the parameterization. The drive remains in fixed stop until the next positioning task is processed or the system is switched to jog mode. The clamping torque is therefore also applied during subsequent waiting tasks. The continuation condition CONTINUE_EXTERNAL_WAIT can be used to specify that the drive should remain in fixed stop until an external signal is given for progression.

As long as the drive remains in fixed stop, the position setpoint is adjusted to the actual position value (position setpoint = actual position value). Fixed stop monitoring and controller enable are active.

Note

If the drive is in fixed stop, it can be referenced using the control signal "Set reference point".

If the axis moves away from the position that it had at detection of the fixed stop by more than the selected monitoring window for the fixed stop (p2635), then the status bit r2683.12 (fixed stop reached) is reset. At the same time, the speed setpoint is set to zero, and fault F07484 "fixed stop outside of the monitoring window" is triggered with the reaction OFF3 (quick stop). The monitoring window can be set using parameter p2635 (Fixed stop monitoring window). It applies to both positive and negative traversing directions and must be selected in such a way that only a breaking away causes the alarm to be triggered.

Fixed stop is not reached

If the brake application point is reached without the "fixed stop reached" status being detected, then the fault F07485 "Fixed stop is not reached" is output with fault reaction OFF1, the torque limit is canceled and the drive cancels the traversing block.

Note

Changing a fault into an alarm

The fault can be changed into an alarm, which means that the drive program will advance to the next specified block.

The target point must be sufficiently far inside the workpiece.

Interruption to "Travel to fixed stop"

The "travel to fixed stop" traversing task can be interrupted and continued using the (intermediate stop) signal at the binector input p2640. The block is canceled using the binector input signal p2641 (reject traversing task) or by removing the controller enable. In all of these cases, the drive is correspondingly braked. When canceling occurs, it is ensured that an almost-achieved fixed stop (setpoint already beyond the fixed stop, but still within the threshold for fixed stop detection) will not result in damage. To do this, the setpoint is updated after the standstill (position setpoint = actual position value). As soon as the fixed stop is reached, the drive remains in fixed stop even after cancellation. It can be moved on from the fixed stop using jogging or by selecting a new traversing task.

Note

Activation of the fixed stop monitoring window

The fixed stop monitoring window (p2635) is only activated when the drive is in fixed stop and remains active until the fixed stop is exited.

Vertical axes

With asymmetrical torque limits p1522 and p1523, when traversing to fixed stop, the fixed weight is taken into account in the parameters r2686 and r2687.

If, for example, with a suspended load, the values of p1522 = +1000 Nm and of p1523 = -200 Nm are specified, then an intrinsic weight of 400 Nm (p1522 - p1523) is assumed. If the clamping torque is now configured as 400 Nm, then r2686[0] is preset to 80 %, r2686[1] to 0 % and r2687 to 800 Nm when travel to fixed stop is activated.

Function diagram

FP 3616	Traversing blocks mode (r0108.4 = 1)
FP 3617	Traversing to fixed stop (r0108.4 = 1)
FD 4025	Dynamic following error monitoring, cam controllers (r0108.3 = 1)

Parameter

- p1528 CI: Torque limit, upper/motoring, scaling
- p1529 CI: Torque limit, lower/regenerative scaling
- p1545 BI: Activates travel to fixed stop
- r2526 CO/BO: LR status word
- p2622 EPOS traversing block, order parameter
- p2634 EPOS Fixed stop maximum permissible following error
- p2635 EPOS Fixed stop monitoring window
- p2637 BI: EPOS Fixed stop reached
- p2638 BI: EPOS Fixed stop outside monitoring window
- r2683 CO/BO: EPOS status word 1
- r2686 CO: EPOS Torque limit effective

9.4.7.9 Direct setpoint specification (MDI)

Description

The direct setpoint input function allows for positioning (absolute, relative) and setup (endless position-controlled) by means of direct setpoint input (e.g. via the PLC using process data).

During traversing, the motion parameters can also be influenced (on-the-fly setpoint acceptance) and an on-the-fly change can be undertaken between the Setup and Positioning modes.

The "direct setpoint input" mode (MDI) can also be used if the axis is not referenced in the "setup" or "relative positioning" modes, which means that "flying referencing" (see the separate section), flying synchronization, and post-referencing are possible.

The direct setpoint input function is activated by p2647 = 1. A distinction is made between two modes: positioning mode (p2653 = 0) and setup mode (p2653 = 1).

- In the "positioning" mode, the parameters (position, velocity, acceleration and deceleration) can be used to carry out absolute (p2648 = 1) or relative (p2648 = 0) positioning with the parameter p2690 (fixed setpoint position).
- In the setting-up mode, using parameters (velocity, acceleration and deceleration) "endless" closed-loop position control behavior can be carried-out.

It is possible to make a flying changeover between the two modes.

If continuous acceptance (p2649 = 1) is activated, changes to the MDI parameters are accepted immediately. Otherwise the values are only accepted when there is a positive edge at binector input p2650 (setpoint acceptance edge).

Note

Continuous acceptance

Continuous acceptance (p2649 = 1) can only be set with a free telegram configuration (p0922 = 999). No relative positioning is allowed with continuous acceptance.

The direction of positioning can be specified using p2651 (positive direction specification) and p2652 (negative direction specification). If both inputs have the same status, the shortest distance is traveled during absolute positioning (p2648 = "1") of modulo axes (p2577 = "1").

To use the positioning function, the drive must be in the "Operation" state (r0002 = 0). The following options are available for starting positioning:

- p2649 is "1" and positive edge on p2647
- p2649 is "0" and p2647 is "1"
  - positive edge on p2650 or
  - positive edge on p2649

An overview of the setpoint acceptance/direct setpoint input is show in function block diagram 3620.

MDI mode with the use of PROFIdrive telegram 110.

If connector input p2654 is preset with a value ≠ 0 (e.g. for PROFIdrive telegram 110 with r2059[11]), then it will internally supply the control signals "Select positioning type", "Positive direction selection" and "Negative direction selection". The following characteristics are evaluated from the value of the connector input:

- xx0x = absolute -> p2648
- xx1x = relative -> p2648
- xx2x = ABS_POS -> p2648, p2651
- xx3x = ABS_NEG -> p2648, p2652

Intermediate stop and reject traversing task

The intermediate stop is activated using a 0 signal at p2640. After activation, the system brakes with the parameterized deceleration value (p2620 or p2645).

The current traversing task can be rejected using a 0 signal at p2641. After activation, the system brakes with the maximum deceleration (p2573).

The "intermediate stop" and "reject traversing task" functions are only effective in "traversing blocks" and "direct setpoint input/MDI" modes.

Function diagram

FD 3618	EPOS - direct setpoint input / MDI mode, dynamic values (r0108.4 = 1)
FD 3620	EPOS - direct setpoint input / MDI mode (r0108.4 = 1)

Parameter

- p2577 BI: EPOS modulo offset activation
- p2642 CI: EPOS direct setpoint input/MDI, position setpoint
- p2643 CI: EPOS direct setpoint input/MDI, velocity setpoint
- p2644 CI: EPOS direct setpoint input/MDI, acceleration override
- p2645 CI: EPOS direct setpoint input/MDI, delay override
- p2648 BI: EPOS direct setpoint input/MDI, positioning type
- p2649 BI: EPOS direct setpoint input/MDI, acceptance type
- p2650 BI: EPOS direct setpoint input/MDI, setpoint acceptance edge
- p2651 BI: EPOS direct setpoint input/MDI, positive direction selection
- p2652 BI: EPOS direct setpoint input/MDI, negative direction selection
- p2653 BI: EPOS direct setpoint input/MDI, setup selection
- p2654 CI: EPOS direct setpoint input/MDI, mode adaptation
- p2690 CO: EPOS position, fixed setpoint
- p2691 CO: EPOS velocity, fixed setpoint
- p2692 CO: EPOS acceleration override, fixed setpoint
- p2693 CO: EPOS delay override, fixed setpoint

9.4.7.10 Jog

Description

Parameter p2591 can be used to switch between "Incremental jog" and "Jog velocity".

Jog signals p2589 and p2590 are used to specify the travel distances p2587 and/or p2588 and the velocities p2585 and p2586. The traversing distances are only effective for a "1" signal at p2591 (jog incremental). When p2591 = "0", the travel range start or the travel range end is approached at the specified velocity.

An overview of the "Jog" function is show in function block diagram 3610.

Function diagram

FP 3610 EPOS - jog mode (r0108.4 = 1)

Parameter

- p2585 EPOS inching 1 setpoint velocity
- p2586 EPOS inching 2 setpoint velocity
- p2587 EPOS inching 1 travel distance
- p2588 EPOS inching 2 travel distance
- p2589 BI: EPOS jog 1 signal source
- p2590 BI: EPOS jog 2 signal source
- p2591 BI: EPOS jog incremental

9.4.7.11 Status signals

The status signals relevant to positioning mode are described below.

Follow-up mode active (r2683.0)

The "Follow-up mode active" status signal indicates that follow-up mode has been activated (via binector input p2655 (follow-up mode) or via a fault). In this status, the position setpoint follows the actual position value, i.e. position setpoint = actual position value.

Setpoint stationary (r2683.2)

The "Setpoint stationary" status signal indicates that the setpoint velocity has a value of "0". The actual velocity may deviate from zero due to a following error. A traversing block is being processed while the status signal has the value "0".

Motion command active (r2684.15)

The "Motion command active" status signal indicates that a motion command is active. A motion command covers all of the movements carried out (including jog, setup etc.). In contrast to the "Setpoint stationary" status signal, this status signal remains active when a motion command, for example, has been stopped by a velocity override or intermediate stop.

SW limit switch plus reached (r2683.7)
SW limit switch minus reached (r2683.6)

These status signals indicate that the parameterized negative (p2578/p2580) or positive (p2579/p2581) traversing range limit has been reached or exceeded. If both status signals are "0", the drive is within the traversing range limits.

Stop cam minus active (r2684.13)
Stop cam plus active (r2684.14)

These status signals indicate that "Stop cam, minus" (p2569) or "Stop cam, plus" (p2570) has been reached or passed. The signals are reset when the cams are left in the direction other than that in which they were approached.

Axis moves forwards (r2683.4)
Axis moves backwards (r2683.5)
Axis accelerates (r2684.4)
Axis decelerates (r2684.5)
Drive stationary (zero speed) (r2199.0)

These status signals indicate the current condition of motion. If the actual absolute speed is less or equal to p2161, then the status signal "drive stationary" is set - otherwise it is deleted. The signals are appropriately set if jog mode, reference point approach or a traversing task is active.

Cam switching signal 1 (r2683.8)
Cam switching signal 2 (r2683.9)

The electronic cam function can be implemented using these signals. Cam switch signal 1 is "0" when the actual position is greater than p2547, otherwise the signal is "1". Cam switch signal 2 is "0" when the actual position is greater than p2548, otherwise the signal is "1". The signal is, therefore, canceled when the drive is beyond the cam switch position. The position controller initiates these signals.

Direct output 1 (r2683.10)
Direct output 2 (r2683.11)

If a digital output is parameterized, the function "direct output 1" or "direct output 2", then it can be set by a corresponding command in the traversing task (SET_O) or reset (RESET_O).

Following error in tolerance (r2684.8)

When the axis is traversed, closed-loop position controlled, using a model, the permissible following error is determined from the instantaneous velocity and the selected Kv factor. Parameter p2546 (dynamic following error monitoring tolerance) defines a dynamic following error window that defines the permissible deviation from the calculated value. The status signal indicates as to whether the following error is within the window (status 1).

Target position reached (r2684.10)

The status signal "target position reached" indicates that the drive has reached its target position at the end of a traversing command. This signal is set as soon as the actual drive position is inside the positioning window (p2544). The signal is reset when the positioning window is exited.

The status signal will not be set under the following conditions:

- A "1" signal is present at the binector input p2554 (message traversing command active).
- A "0" signal is present at the binector input p2551 (message setpoint stationary).

The status signal remains set until a "1" signal is present at the binector input p2551 (message setpoint stationary).

Reference point set (r2684.11)

The signal is set as soon as referencing has been successfully completed. It is reset when reference point approach is started.

Acknowledgement, traversing block activated (r2684.12)

A positive edge is used to acknowledge that a new motion command or setpoint has been accepted in “Traversing blocks” mode (same signal level as for binector input p2631 (activate traversing block)). In the mode "direct setpoint input / MDI for setting-up/positioning" a positive edge is used to acknowledge that a new traversing task or setpoint was transferred (the same signal level as binector input p2650 (edge setpoint transfer), if the transfer type was selected using a signal edge (binector input p2649 "0" signal)).

Velocity limiting active (r2683.1)

If the actual setpoint velocity exceeds the maximum velocity (p2571) – taking into account the velocity override – then it is limited and the status signal is set.

9.4.8 Parameterizable bandstop filters for the active infeed

Description

With the "Additional controls" function module, parameterizable bandstop filters can be used with whose help path resonances can be attenuated.

The main application of these bandstop filters is in weak networks in which the resonance point of the line filter can drop to one quarter of the controller frequency.

The parameterizable bandstop filters for the Active Infeed can be parameterized via the expert list:

- Fixed setpoints (p2900 ff)
- Negative phase-sequence system control (p3639 ff)
- Bandstop filters:
  - Output voltage setpoint value filter; activation with p5200.0 = 1
  - Actual current value filter; activation with p5200.2 = 1
  - Vdc-current value filter; activation with p1656.4 = 1

Commissioning

The "Additional controls" function module can be activated by running the commissioning wizard. Parameter r0108.03 indicates whether the function module has been activated.

Function diagram

FP 8940	Controller modulation depth reserve/controller DC link voltage (p3400.0 = 0)
FP 8946	Current pre-control/current controller/gating unit (p3400.0 = 0)

Parameters

- p1656.4 Signal filter activated
- p1677 Vdc-current value filter 5 type
- p1678 Vdc-current value filter 5 denominator natural frequency
- p1679 Vdc-current value filter 5 denominator damping
- p1680 Vdc-current value filter 5 numerator natural frequency
- p1681 Vdc-current value filter 5 numerator damping
- p2900 CO: Fixed value 1[%]
- p2901 CO: Fixed value 2[%]
- p5200 Signal filter activated
- p5201 Output voltage setpoint value filter 5 type

- p5202 Output voltage setpoint value filter 5 denominator natural frequency
- p5203 Output voltage setpoint value filter 5 denominator damping
- p5204 Output voltage setpoint value filter 5 numerator natural frequency
- p5205 Output voltage setpoint value filter 5 numerator damping
- p5211 Actual current value filter 7 type
- p5212 Actual current value filter 7 denominator natural frequency
- p5213 Actual current value filter 7 denominator damping
- p5214 Actual current value filter 7 numerator natural frequency
- p5215 Actual current value filter 7 numerator damping

9.4.9 Active phase failure detection

Description

The active phase failure detection detects high-resistance line phase failures quickly and reliably, and therefore protects workpieces during machining against damage caused by uncontrolled movements of the drive axes. Through the active detection, network phase failures are even recognized in no-load operation or with low load.

Commissioning

The "Additional controls" function module can be activated by running the commissioning wizard. Parameter r0108.03 indicates whether the function module has been activated.

1. Set p3640.0 = 1 to activate the negative-phase sequence system current controller.
2. Check the set thresholds in p3647[0...2].
   - Index 0: Threshold limit
   - Index 1: Signaling threshold
   - Index 2: Smoothing time 4
3. Set p3640.1 = 1 and p3640.2 = 1.

If the threshold set in p3647[0] is exceeded, then alarm A06208 is output and r3405.2 = 1 is set (phase failure detected).

Function diagram

FP 7987 Direct component control, negative phase-sequence system controller

Parameters

- p3640 Negative phase-sequence system controller configuration
- p3647[0..2] Negative phase-sequence system controller phase asymmetry

9.5 Monitoring and protective functions

9.5.1 Protecting power components

Description

SINAMICS power modules offer comprehensive protection of power components.

Table 9- 20 General protection for power units

Protection against:	Protective measure	Response
Overcurrent[1)]	Monitoring with two thresholds: • First threshold exceeded	A30031, A30032, A30033 Current limiting in phase U has responded. Pulsing in this phase is inhibited for one pulse period. F30017 -> OFF2 is triggered if the threshold is exceeded too often.
	• Second threshold exceeded	F30001 "Overcurrent" -> OFF2
DC link overvoltage [1)]	Comparison of DC link voltage with hardware shutdown threshold	F30002 "Overvoltage" -> OFF2
DC link undervoltage [1)]	Comparison of DC link voltage with hardware shutdown threshold	F30003 "Undervoltage" -> OFF2
Short-circuit[1)]	Second monitoring threshold checked for overcurrent	F30001 "Overcurrent" -> OFF2
	Uce monitoring for IGBT module	F30022 "Monitoring Uce" -> OFF2
Ground fault	Monitoring the sum of all phase currents	After threshold in p0287 is exceeded: F30021 "power unit: Ground fault" -> OFF2 Note: The sum of all phase currents is displayed in r0069[6]. For operation, the value in p0287[1] must be greater than the sum of the phase currents when the insulation is intact.
Line phase-failure detection [1)]		F30011 "Line phase-failure in main circuit" -> OFF2

[1)] The monitoring thresholds are permanently set in the converter and cannot be changed by the user.

9.5.2 Thermal monitoring and overload responses

Description

The thermal power unit monitor is responsible for identifying critical situations. Possible reactions can be assigned and used when alarm thresholds are exceeded to enable continued operation (e.g., with reduced power) and prevent immediate shutdown. The parameterization options, however, only enable intervention below the shutdown thresholds, which cannot be changed by the user.

The following thermal monitoring options are available:

- I^2t monitoring – A07805 – F30005
  i^2t monitoring is used to protect components that have a high thermal time constant compared with semiconductors. Overload with regard to i^2t is present when the converter load (r0036) is greater than 100 % (load as a % of rated operation).
- Heat sink temperature - A05000 - F30004
  Used to monitor the temperature r0037[0] of the heat sinks on the power semiconductors (IGBT).
- Chip temperature - A05001 - F30025
  Significant temperature differences can occur between the barrier layer of the IGBT and the heat sink. The calculated barrier junction temperature is displayed in r0037[13...18]; the monitoring ensures that the specified maximum barrier junction temperature is not exceeded.

If an overload occurs with respect to any of these three monitoring functions, an alarm is first output. The alarm threshold p0294 (i^2t monitoring) can be parameterized relative to the shutdown (trip) values.

Overload responses

To reduce thermal stress and thus losses in the power unit, the following methods and overload responses are available.

- **Reducing the pulse frequency**

  Reducing the pulse frequency is an effective procedure for reducing losses in the power unit. This is due to the fact that the switching losses make up a very large portion of the total losses. In many applications, a temporary reduction in pulse frequency is tolerable.

  Disadvantage:

  Reducing the pulse frequency increases the current ripple. At a small moment of inertia, this may cause an increase in the torque ripple on the motor shaft and a noise level increase. We recommend using the overload response with pulse frequency reduction for applications that are not critical from a control-related perspective (e.g. for pump and fan drives).

  Note

  This procedure can be used only if the power unit is clocked with a pulse frequency greater than the minimum pulse frequency and a reduction of the pulse frequency is permissible.

- **Reducing the output current**

  We recommend this procedure if a pulse frequency reduction is not desired or permissible (e.g. if the pulse frequency has already been set to the lowest level).

  Disadvantage:

  This procedure makes sense exclusively for drives that must tolerate a rotational speed deviation and must not be operated at a constant torque.

Responses

The Control Unit sets the desired responses using p0290. Using this parameter, the described procedures can be used in various combinations in order to reduce the thermal stress.
The following responses are possible depending on the selected procedure:

- **No reduction (p0290 = 1)**

  Select this option if neither reducing the pulse frequency or reducing the output current (= output frequency) can be considered suitable procedures. In this case, the converter does not change its operating point once an alarm threshold has been overshot, which means that the drive can be operated until it reaches its shutdown values.

  When the trip threshold is reached, the converter switches off and outputs one of the following faults.

  – F30004 (power unit: temperature rise for inverter heat sink)
  – F30005 (power unit: overload I2t) check, was skipped
  – F30025 (power unit: chip temperature rise)

  The time until shutdown is not defined and depends on the degree of overload. We recommend the set value p0290 = 1 for applications that, based on the process, do not allow set value deviations for individual drives in the group or for which the pulse frequency must absolutely be adhered to.

- **Reducing the output current (p0290 = 0)**

  For the set value "0" the following applies:

  When a temperature alarm threshold or I^2t alarm threshold is exceeded, the output frequency (= output frequency) is reduced. If the reduction of the output current is not sufficient for eliminating the thermal stress on the power unit, the drive switches off when the corresponding fault threshold is reached.

  Note

  This setting is not suitable for drives requiring a constant torque.

- **Reducing the pulse frequency (p0290 = 3, 13)**

  This procedure is suitable for the following applications:

  – The drive is frequently started and accelerated.

  – The drive has a heavily fluctuating torque profile. Reducing the output current is not desired.

  – The drive is operated at a low dynamic response and occasional overload. A rotational speed deviation is not allowed.

  For the set value "3" the following applies:

  When a temperature alarm threshold is exceeded, the pulse frequency is reduced to a permissible minimum.

  For the set value "13" the following applies:

  In this case, the chip temperature is evaluated based on the load at the current time. If this temperature exceeds the alarm threshold, the pulse frequency is reduced to a permissible minimum. Unlike the set value "3", the pulse frequency is reduced based on the chip temperature evaluation before the temperature alarm threshold has even been reached.

- **Reducing the pulse frequency and the output current (p0290 = 2, 12)**

  This procedure is suitable for the following applications:

  – The drive is frequently started and accelerated.

  – The drive has a heavily fluctuating torque profile.

  For the set value "2" the following applies:

  When a temperature alarm threshold is exceeded, the pulse frequency is reduced to a permissible minimum. If the pulse frequency reduction is not sufficient for eliminating the thermal stress on the power unit, then the output current is also reduced. When the I^2t alarm threshold is reached, only the output current is reduced while the pulse frequency remains at the set value.

  For the set value "12" the following applies:

  In this case, the chip temperature is evaluated based on the load at the current time. If this temperature exceeds the alarm threshold, the pulse frequency is reduced to a permissible minimum. Unlike the set value "2", the pulse frequency is reduced based on the chip temperature evaluation before the temperature alarm threshold has even been reached. The output current is reduced if, in addition to the chip temperature, also the alarm thresholds of the heat sink temperature and the I2t monitoring are exceeded.

Function diagram

FP 8021 Thermal monitoring, power unit

Parameter

- r0036 CO: Power unit overload I2t
- r0037 CO: Power unit temperatures
- p0290 Power unit overload response
- r0293 CO: Power unit alarm threshold model temperature
- p0294 Power unit alarm I2t overload
- r2135.13 Fault thermal overload power unit
- r2135.15 Alarm, thermal overload power unit

9.5.3 Blocking protection

Description

The "Motor blocked" fault is only triggered when the speed of the drive is below the adjustable speed threshold in p2175.

- For vector control, then the speed controller must also be at its limit.
- For U/f control, then the current limit must also be reached.

Once the on delay (p2177) has elapsed, the message "Motor blocked" and fault F07900 are generated.

The blocking monitoring enable can be deactivated via p2144.

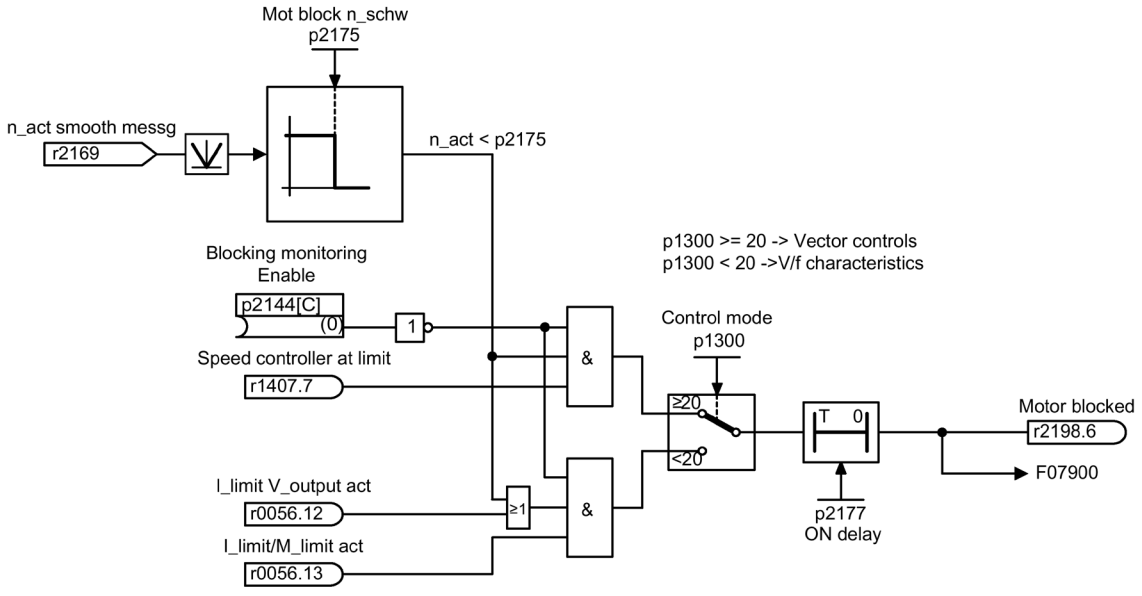

Figure 9-52 Blocking protection

Function diagram

FP 8012 Signals and monitoring functions - torque messages, motor locked/stalled

Parameter

- p2144 BI: Motor stall monitoring enable (negated)
- p2175 Motor locked speed threshold
- p2177 Motor locked delay time

9.5.4 Stall protection (only for vector control)

Description

If, for closed-loop speed control with encoder, the speed threshold set in p1744 for stall detection is exceeded, then r1408.11 (speed adaptation, speed deviation) is set.

If the fault threshold value set in p1745 is exceeded when in the low speed range (less than p1755 x (100% - p1756)), r1408.12 (motor stalled) is set.

If one of these two signals is set, then after the delay time in p2178, fault F07902 (motor stalled) is returned.

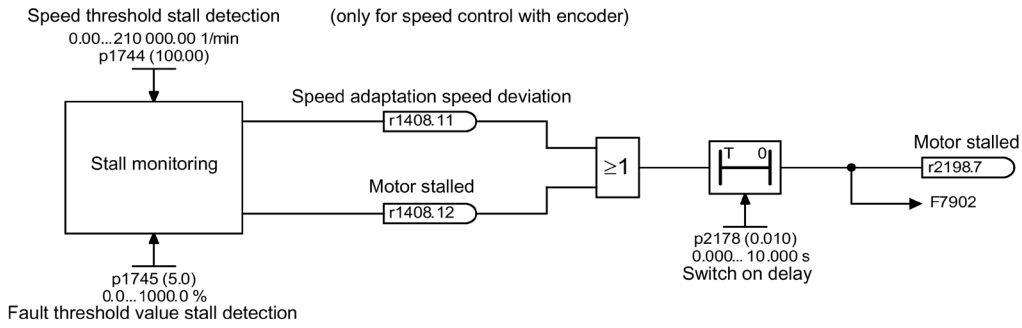

Figure 9-53 Stall protection

Function diagram

FP 6730 Vector control - Interface to Motor Module (ASM, p0300 = 1)
FP 8012 Messages and monitoring - Torque messages, motor blocked/stalled

Parameter

- r1408 CO/BO: Control status word, current controller
- p1744 Motor model speed threshold stall detection
- p1745 Motor model error threshold stall detection
- p1755 Motor model changeover speed encoderless operation
- p1756 Motor model changeover speed hysteresis encoderless operation
- p2178 Motor stalled delay time

9.5.5 Thermal motor protection

9.5.5.1 Description

Description

The priority of thermal motor protection is to identify critical situations. Possible reactions can be assigned (p0610) and used when alarm thresholds are exceeded to enable continued operation (e.g., with reduced power) and prevent immediate shutdown.

- Effective protection is also possible without a temperature sensor (p0600 = 0 or p4100 = 0). The temperatures of different motor components (stators, core, rotors) can be determined indirectly using a temperature model.
- Connecting temperature sensors allows the motor temperature to be determined directly. In this way, accurate start temperatures are available immediately when the motor is switched on again or after a power failure.

9.5.5.2 Temperature sensor connection at the customer terminal block TM31 (option G60)

Temperature measurement via KTY

The device is connected to terminals X522:7 (Temp+) and X522:8 (Temp-) on the customer terminal block (TM31) in the forward direction of the diode. The measured temperature is limited to between –140 °C up to +188.6 °C and is available for further evaluation.

- Activating the motor temperature measurement via the external sensor: p0600 = 10
  If the customer terminal block TM31 (option G60) is available and after commissioning has been completed, the source for the external sensor is set to the customer terminal block (p0603 = {TM31} r4105).
- Set the KTY temperature sensor type: p4100 = 2.

Temperature measurement via PTC

The connection is made to user terminal block (TM31) at terminal X522:7/8. The threshold for changing over to an alarm or fault is 1650 Ω. If the threshold is exceeded, the system switches internally from an artificially-generated temperature value of -50° C to +250° C and makes it available for further evaluation:

- Activating the motor temperature measurement via the external sensor: p0600 = 10
  If the customer terminal block TM31 (option G60) is available and after commissioning has been completed, the source for the external sensor is set to the customer terminal block (p0603 = {TM31} r4105).
- Set the PTC temperature sensor type: p4100 = 1.

Temperature measurement via PT1000

The connection is made to user terminal block (TM31) at terminal X522:7/8. The measured temperature is limited to between –99 °C up to +188.6 °C and is available for further processing.

- Activating the motor temperature measurement via the external sensor: p0600 = 10
  If the customer terminal block TM31 (option G60) is available and after commissioning has been completed, the source for the external sensor is set to the customer terminal block (p0603 = {TM31} r4105).
- Set the PT1000 temperature sensor type: p4100 = 6.

9.5.5.3 Temperature sensor connection to a Sensor Module (options K46, K48, K50)

Temperature measurement via KTY

The device is connected to the appropriate terminals Temp- and Temp+ on the Sensor Module in the forward direction of the diode (see corresponding section in chapter "Electrical installation").

- Activate motor temperature measurement via encoder 1: p0600 = 1.
- Set the KTY temperature sensor type: p0601 = 2.

Temperature measurement via PTC

The device is connected to the appropriate terminals Temp- and Temp+ on the Sensor Module (see corresponding section in chapter "Electrical installation"). The threshold for changing over to an alarm or fault is 1650 Ω.

- Activate motor temperature measurement via encoder 1: p0600 = 1.
- Set the PTC temperature sensor type: p0601 = 1.

Temperature measurement via PT1000

The device is connected to the appropriate terminals Temp- and Temp+ on the Sensor Module (see corresponding section in chapter "Electrical installation").

- Activate motor temperature measurement via encoder 1: p0600 = 1.
- Set the PTC temperature sensor type: p0601 = 6.

9.5.5.4 Temperature sensor connection directly at the Control Interface Module

Temperature measurement via KTY

The device is connected to terminals X41:3 (Temp-) and X41:4 (Temp+) on the Control Interface Module in the forward direction of the diode.

- Activate motor temperature measurement via Motor Module: p0600 = 11.
- Set the KTY temperature sensor type: p0601 = 2.

Temperature measurement via PTC

The connection is made at the terminals X41:3 (Temp-) and X41:4 (Temp+) at the Control Interface Module. The threshold for changing over to an alarm or fault is 1650 Ω.

- Activate motor temperature measurement via Motor Module: p0600 = 11.
- Set the PTC temperature sensor type: p0601 = 1.

Temperature measurement using the bimetal normally closed contact

The connection is made at the terminals X41:3 (Temp-) and X41:4 (Temp+) at the Control Interface Module. The threshold for changing over to an alarm or fault is 100 Ω.

- Activate motor temperature measurement via Motor Module: p0600 = 11.
- Set the temperature sensor type bimetal normally closed contact: p0601 = 4.

Temperature measurement via PT100

The connection is made at the terminals X41:3 (Temp-) and X41:4 (Temp+) at the Control Interface Module. p0624 can be used to set the temperature offset for the PT100 measured value.

- Activate motor temperature measurement via Motor Module: p0600 = 11.
- Set the PT100 temperature sensor type: p0601 = 5.

Temperature measurement via PT1000

The connection is made at the terminals X41:3 (Temp-) and X41:4 (Temp+) at the Control Interface Module.

- Activate motor temperature measurement via Motor Module: p0600 = 11:
- Set the PT1000 temperature sensor type: p0601 = 6.

9.5.5.5 Temperature sensor evaluation

Temperature measurement via KTY, PT100 or PT1000

- When the alarm threshold is reached (set via p0604; delivery state after commissioning 120 °C), alarm A07910 is triggered.

  Parameter p0610 can be used to set how the drive responds to the alarm triggered:

  – 0: No response, only alarm, no reduction of I_max
  – 1: Alarm and reduction of I_max and fault (F07011)
  – 2: Alarm and fault (F07011), no reduction of I_max
  – 12: Alarm and fault (F07011), no reduction of I_max, temperature saved
- When the fault threshold is reached (set via p0605, delivery state after commissioning 155 °C), fault F07011 is triggered in conjunction with the setting in p0610.

Temperature measurement via PTC or bimetallic normally closed contact

- Once the PTC or the bimetallic normally closed contact responds, alarm A07910 is initiated.
- Fault F07011 is triggered once the waiting time defined in p0606 has elapsed.

Sensor monitoring for wire breakage/short-circuit

- A sensor monitoring function for a short-circuit in the sensor cable is possible for a PTC and a PT1000 or KTY84 sensor. For a PT1000 or KTY84 sensor, it is possible to monitor for wire breakage:
  If the temperature of the motor temperature monitor is outside the range -140 to +250 °C, then the sensor cable is broken or has a short-circuit – and Alarm A07015 "Motor temperature sensor alarm" is triggered. Fault F07016 (“Drive: Motor temperature sensor fault”) is triggered once the waiting time defined in p0607 has elapsed.
- Fault F07016 can be suppressed using p0607 = 0. If an induction motor is connected, the drive continues operating with the data calculated in the thermal motor model.
- If the system detects that the motor temperature sensor set in p0600 is not connected, alarm A07820 "Temperature sensor not connected" is triggered.

9.5.5.6 Thermal motor models

Thermal motor models are used so that thermal motor protection is guaranteed even without a temperature sensor or with a deactivated temperature sensor (p0600 = 0).

The simultaneous use of temperature sensors and a thermal motor model also makes sense. For example, a very fast temperature increase that is not detected by the sensors in sufficient time can potentially damage a motor. This situation can occur for motors with a low thermal capacity.

Depending on the particular model, the temperature rise is either assigned different motor parts (stator, rotor), or is calculated from the motor current and the thermal time constant. A combination of motor temperature model with additional temperature sensors can also be deployed.

NOTICE
Material damage caused by overheating for motor operation without sensor A thermal motor model cannot fully replace a sensor. The thermal model cannot protect the motor if incorrectly installed, for increased ambient temperatures or if errors were made in the parameter settings. Without temperature sensors, thermal motor models are not in a position to identify or take into account the ambient temperatures or the initial motor temperature. This can cause motor overheating and so material damage. • Do not deploy thermal motor models when a higher environment temperature or a higher initial temperature of the motor can occur.

Thermal motor model 1 (for permanent-magnet synchronous machines)

By deploying the thermal I2t motor model, the temperature rise of the motor windings as a result of dynamic motor loads is also determined in addition to data acquired using a temperature sensor.

The model motor temperature is indicated in r0632. It is calculated from the following values:

- Absolute value of the actual current, unsmoothed (r0068[0])
- Motor stall current (p0318)
- I2t motor model thermal time constant (p0611)
- Measured motor temperature (r0035) or motor ambient temperature (p0613, p0625) for operation without temperature sensor
- Motor temperature at rated load (p0605, for expansion p0627)

Commissioning the motor model

The thermal I2t motor model is activated via p0612.0 = 1, the expansions of the motor model can additionally be activated via p0612.8 = 1.

Note

When commissioning the motor, thermal motor model 1 (p0612.0 = 1) including expansion (p0612.8 = 1) is automatically activated.

Preconditions for automatic activation:

- Use of a permanent magnet synchronous motor
- There is no motor sensor
- No (other) thermal motor model is activated

Important settings

The most important parameters for thermal motor model 1 and/or for the expansion of this model are subsequently explained.

When the expansion is subsequently activated, the corresponding parameters of the expansion are preassigned with the parameter values before activating the expansion.

Parameters for the following settings		Explanation
p0612.8 = 0	p0612.8 = 1	
p0605	p5390	Alarm threshold If the model motor temperature (r0632) exceeds the alarm threshold, alarm A07012 "Drive: Motor temperature model 1/3 overtemperature" is output.
p0615	p5391	Fault threshold If the model motor temperature (r0632) exceeds the fault threshold, fault F07011 "Drive: Motor overtemperature" is output.
p0605	p0627 + 40 °C	Rated temperature (winding) Defines the rated overtemperature of the stator winding referred to the ambient temperature.
1.333 (fixed value)	p5350	Boost factor Defines the boost factor for the copper losses at standstill.
p0612 = 0x1	p0612 = 0x101	Activation Activates the motor module and/or additionally the expansion.
r0632	r0632	Actual temperature Indicates the stator winding temperature of the motor temperature model.
r0034	r0034	Motor utilization Indicates the actual motor utilization level.

Taking into account the ambient temperature

If, for thermal motor model 1, a temperature sensor has not been the parameterized, then motor module 1 automatically uses an ambient temperature of 20 °C for the calculation. You can enter one of these ambient temperatures deviating from the standard temperature as follows:

1. Activate the setting p0612.12 = 1.
   This enables parameter p0613. The factory setting is 20 °C.
2. If you wish to take into account an ambient temperature, which deviates from the factory setting, in the motor model, then enter the expected ambient temperature in p0613.

Note

When commissioning the motor, the setting p0612.12 = 1 is automatically activated. When required, the value in p0613 can be changed.

Thermal motor model 2 (for induction motors)

Thermal motor model 2 is used for induction motors. It is a thermal 3-mass model.

This makes thermal motor protection possible even for operation without temperature sensor or with the temperature sensor deactivated (p0600 = 0).

Commissioning the motor model

The thermal 3-mass model is activated with p0612.1 = 1. An expansion makes the motor model more precise; this can be additionally activated using p0612.9 = 1.

Note

When commissioning the motor, the expansion of thermal motor model (p0612.9 = 1) is automatically activated.

Motor model settings

The total motor mass is entered in p0344.

The 3-mass model splits up the total motor mass as follows:

- p0617 = thermally active iron mass (stator): laminated cores and frame as a percentage of p0344
- p0618 = thermally active copper mass (stator: windings) as a percentage of p0344
- p0619 = thermally active rotor mass (rotor) as a percentage of p0344

Entering the temperatures:

- p0625 = ambient temperature
- p0626 = overtemperature, stator iron
- p0627 = overtemperature, stator winding
- p0628 = rotor winding temperature rise

The motor temperatures are calculated on the basis of motor measured values. The calculated temperatures are indicated in the following parameters:

- r0630 Motor temperature model ambient temperature
- r0631 Motor temperature model stator iron temperature
- r0632 Motor temperature model stator winding temperature
- r0633 Motor temperature model rotor temperature

In operation with a KTY or PT1000 sensor, the calculated temperature value of the 3-mass model is continuously corrected to track the measured temperature value. After the temperature sensor is switched off (p0600 = 0 or p0601 = 0), the last temperature value continues to be used as basis for the calculation.

9.5.5.7 Function diagram

FP 8016	Thermal motor monitoring, mot_temp ZSW F/A
FP 8017	Motor temperature model 1 (I2t)
FP 8018	Motor temperature model 2
FP 9576	TM31 - temperature evaluation (KTY/PTC)

9.5.5.8 Parameters

Temperature sensor evaluation

- r0035 CO: Motor temperature
- p0600 Motor temperature sensor for monitoring
- p0601 Motor temperature sensor type
- p0603 Motor temperature signal source
- p0604 Motor overtemperature fault threshold
- p0605 Motor overtemperature fault threshold
- p0606 Motor overtemperature timer
- p0607 Temperature sensor fault timer
- p0610 Motor overtemperature response
- p0614 Thermal resistance adaptation reduction factor
- p0624 Motor temperature offset PT100
- p4100 TM31 temperature evaluation sensor type
- r4105 CO: TM31 temperature evaluation actual value

Thermal motor model 1 (for permanent-magnet synchronous machines)

- r0034 CO: Motor utilization
- r0068[0] CO: Absolute value of actual current, unsmoothed
- p0318 Motor stall current
- p0605 Motor overtemperature fault threshold
- p0610 Motor overtemperature response
- p0611 I2t motor model thermal time constant
- p0612 Thermal motor model configuration
- p0613 Mot_temp_mod 1/3 ambient temperature
- p0615 I2t motor model fault threshold
- p0625 Motor ambient temperature
- p0627 Motor overtemperature, stator winding
- p0632 Mot_temp_mod stator winding temperature
- p5350 Mot_temp_mod 1/3 zero speed boost factor
- p5390 Mot_temp_mod 1/3 alarm threshold
- p5391 Mot_temp_mod 1/3 fault threshold

Thermal motor model 2 (for induction motors)

- p0344 Motor weight
- p0612 Thermal motor model configuration
- p0617 Stator thermally relevant iron component
- p0618 Stator thermally relevant copper component
- p0619 Rotor thermally relevant mass
- p0625 Motor ambient temperature
- p0626 Motor overtemperature, stator iron
- p0627 Motor overtemperature, stator winding
- p0628 Motor overtemperature, rotor winding
- r0630 Mot_temp_mod ambient temperature
- r0631 Mot_temp_mod stator iron temperature
- r0632 Mot_temp_mod stator winding temperature
- r0633 Mot_temp_mod rotor temperature

9.5.6 Temperature measurement via TM150 (option G51)

9.5.6.1 Description

Terminal Module 150 (TM150) has 6x 4-pole terminals for temperature sensors. Temperature sensors can be connected in a 1x2, 1x3 or 1x4-wire system. In a 2x2-wire system, up to 12 input channels can be evaluated. 12 input channels can be evaluated in the factory setting. The temperature channels can be combined into three groups and evaluated together.

PTC, KTY84, bimetallic NC contact, PT100 and PT1000 temperature sensors can be connected and evaluated. The fault and/or alarm thresholds of the temperature values can be set from -99° C up to 251° C.

The temperature sensors are connected at terminal blocks X531 to X536 according to the following table.

The TM150 temperature inputs are not electrically isolated.

Selecting the sensor types

- p4100[0...11] sets the sensor type for the respective temperature channel.
- r4105[0...11] indicates the actual value of the temperature channel.

  For switching temperature sensors, such as e.g. PTC and bimetallic NC contact, symbolically two limit values are displayed:

  – r4105[0...11] = -50 °C: The actual temperature value is below the rated response temperature.

  – r4105[0...11] = +250 °C: The actual temperature value is above the rated response temperature.

Note

PTC and bimetallic NC contact

What is shown in r4105[0...11] does not correspond to the actual temperature value.

Table 9- 21 Selecting the sensor types

Value of p4100[0...11]	Temperature sensor	Temperature display range r4105[0...11]
0	Evaluation disabled	-
1	PTC thermistor	-50° C or +250° C
2	KTY84	-99° C to +250° C
4	Bimetallic NC contact	-50° C or +250° C
5	PT100	-99° C to +250° C
6	PT1000	-99° C to +250° C

Measuring the cable resistances

When using 2-wire sensors (1x2, 2x2 wire systems), to increase the measuring accuracy, the cable resistance can be measured and saved.

Procedure for determining the cable resistance:

1. Select the measuring method (1x2/2x2) for the corresponding terminal block (p4108[0...5] = 0, 1).
2. Set the required sensor type for the relevant channel (p4100[x] = 1 ... 6, x = 0...5 or 0...11).
3. Bypass/jumper the sensor to be connected (short-circuit the sensor cable close to the sensor).
4. Connect the sensor cables to the relevant terminals 1(+), 2(-) or 3(+), 4(-).
5. For the corresponding channel, start measurement of the cable resistance (p4109[x] = 1).
6. After p4109[x] = 0, check the measured resistance value in p4110[x].
7. Remove the jumper across the temperature sensor.

The measured cable resistance is then taken into account when evaluating the temperature. The cable resistance value is saved in p4110[0...11].

Note

Cable resistance

The value for the cable resistance can also be directly entered into p4110[0...11].

Line filter

A line filter is available to suppress radiated noise. Using p4121, the filter can be set to a 50 Hz or 60 Hz rated line frequency.

9.5.6.2 Measurement with up to 6 channels

Temperature measurement with a sensor in 2-wire technology

With p4108[0...5] = 0, you evaluate a sensor in a 2-wire system at a 4-wire connection at terminals 1(+) and 2(-).
Terminals 3 and 4 remain open.

Temperature measurement with a sensor in 3-wire technology

With p4108[0...5] = 2, you sense the signals from a sensor in 3-wire system at a 4-wire connection at terminals 3(+) and 4(-).
The measuring wire is connected at terminal 1(+).
You must short-circuit terminals 2(-) and 4(-).

Temperature measurement with a sensor in 4-wire technology

With p4108[0...5] = 3, you sense the signals from a sensor in a 4-wire system at a 4-wire connection at terminals 3(+) and 4(-).
The measuring wire is connected at terminals 1(+) and 2(-).

9.5.6.3 Measurement with up to 12 channels

Temperature measurement with two sensors in 2-wire technology

With p4108[0...5] = 1, you sense two sensors in a 2-wire system.
The first sensor is connected at terminals 1(+) and 2(-).
The second sensor (number = first sensor + 6) is connected at terminals 3(+) and 4(-).

When connecting two sensors in a 2-wire system to terminal X531, the first sensor is assigned to temperature channel 1 and the second sensor is assigned to channel 7 (1+6).

Note

Connection diagram for 12 temperature channels

The temperature sensors connected to a TM150 are not numbered consecutively. The first 6 temperature channels retain their numbering of 0 to 5. The other 6 temperature channels are consecutively numbered from 6 to 11, starting at terminal X531.

Example of 8 temperature channels:

- 2x2 conductors at terminal X531: p4108[0] = 1 ≙ sensor 1 is at channel 0 and sensor 2 is at channel 6
- 2x2 wire at terminal X532: p4108[1] = 1 ≙ sensor 1 is at channel 1 and sensor 2 is at channel 7
- 1x3 wire at terminal X533: p4108[2] = 2 ≙ sensor 1 is at channel 2
- 1x3 wire at terminal X534: p4108[3] = 2 ≙ sensor 1 is at channel 3
- 1x4 wire at terminal X535: p4108[4] = 3 ≙ sensor 1 is at channel 4
- 1x2 conductor at terminal X536: p4108[5] = 0 ≙ sensor 1 is at channel 5

9.5.6.4 Forming groups of temperature sensors

Using p4111[0...2], temperature channels can be combined to form groups. For each group, the following calculated values are provided from the temperature actual values (r4105[0...11]):

- Maximum: r4112[0...2], (index 0,1,2 = group 0,1,2)
- Minimum: r4113[0...2]
- Average value: r4114[0...2]

Example:

The temperature actual value from channels 0, 3, 7, and 9 should be combined in group 1:

- p4111[1].0 = 1
- p4111[1].3 = 1
- p4111[1].7 = 1
- p4111[1].9 = 1

The calculated values from group 1 are available in the following parameters for interconnection:

- r4112[1] = maximum
- r4113[1] = minimum
- r4114[1] = average value

Note

Forming groups of temperature channels

Only form groups of continuously measuring temperature sensors. Depending on the status, the switching temperature sensors PTC and bimetal NC contacts are only assigned two temperatures - 50 °C and +250 °C.
Within a group with continuously measuring temperature sensors, the calculation of the maximum/minimum/average values, is significantly falsified when taking into account switching temperature sensors.

9.5.6.5 Evaluating temperature channels

For each of the individual 12 temperature channels, using p4102[0...23] an alarm threshold and a fault threshold can be set (straight parameter indices: Alarm thresholds, odd parameter indices: Fault thresholds). The temperature thresholds can be set for each channel from -99 °C to +251 °C. For p4102[0...23] = 251, the evaluation of the corresponding threshold is deactivated.
Using p4118[0...11], for each channel a hysteresis for the fault/alarm thresholds can be set in p4102[0...23].

The following applies for the alarm thresholds:

- If the temperature actual value associated with a channel exceeds the set alarm threshold (r4105[x] > p4102[2x]), the corresponding alarm is output. Timer p4103[0...11] is started at the same time.
- The alarm remains until the temperature actual value (r4105[x]) has reached or fallen below the alarm threshold (p4102 [2x]) - hysteresis (p4118 [x]).
- If, after the timer has expired, the temperature actual value is still above the alarm threshold, then the appropriate fault is output.

The following applies for the fault thresholds:

- If the temperature actual value associated with a channel exceeds the set fault threshold (r4105[x] > p4102[2x+1]), the corresponding fault is output.
- The fault remains until the temperature actual value (r4105[x]) has reached or fallen below the fault threshold (p4102 [2x+1]) - hysteresis (p4118 [x]) and the fault has been acknowledged.

Using p4119[0...11], for each channel, a filter can be activated to smooth the temperature signal.
The time constant of the filter depends on the number of active temperature channels and can be read in r4120.

Failure of a sensor within a group

Using parameter p4117[0...2], the response to the failure of a temperature sensor can be set within a group:

- p4117[x] = 0: The failed sensor is not taken into account in the group.
- p4117[x] = 1: When a sensor fails, for the maximum value, minimum value and the average value of the group, a value of 300 °C is output.

Smoothing time for temperature channels

For long or unshielded temperature cables, interference can occur and incorrectly shut down the drive (nuisance trip). To avoid this, a smoothing time can be configured for every temperature channel in TM150 for the respective temperature signal.

The smoothing is realized using a 1st order lowpass filter. The effective smoothing time constant depends on the number of simultaneously active temperature channels, and is indicated in parameter r4120 [0...11].

The smoothing time constant to be set is calculated using the following formula:
Smoothing time constant (p4122) ≥ 2 x active number of channels x 50 ms

Setting the smoothing time (using sensor 5 as an example)

- Activate the smoothing time: p4119[5] = 1.
- Enter the smoothing time constant: p4122[5] = 1.

  The smoothing time constants can be calculated using the formula shown above. To do this, you have to know for how many temperature channels you wish to configure a smoothing time. The implemented smoothing time is displayed after the entry in p4122 for the selected temperature channel (r4120[0...11]).

9.5.6.6 Function diagram

FP 9625	TM150 - temperature evaluation structure (channel 0 ... 11)
FP 9626	TM150 - temperature evaluation 1x2, 3, 4-wire (channel 0 ... 5)
FP 9627	TM150 - temperature evaluation 2x2-wire (channel 0 ... 11)

9.5.6.7 Parameter

- p4100[0...11] TM150 sensor type
- r4101[0...11] TM150 sensor resistance
- p4102[0...23] TM150 fault threshold/alarm threshold
- p4103[0...11] TM150 delay time
- r4104.0...23 BO: TM150 temperature evaluation status
- r4105[0...11] CO: TM150 temperature actual value
- p4108[0...5] TM150 terminal block measurement method
- p4109[0...11] TM150 cable resistance measurement
- p4110[0...11] TM150 cable resistance value
- p4111[0...2] TM150 group channel assignment
- r4112[0...2] CO: TM150 group, temperature actual value maximum value
- r4113[0...2] CO: TM150 group, temperature actual value minimum value
- r4114[0...2] CO: TM150 group temperature actual value, average
- p4117[0...2] TM150 group, sensor fault effect
- p4118[0...11] TM150 fault threshold/alarm threshold hysteresis
- p4119[0...11] TM150 activate/deactivate smoothing
- r4120[0...11] TM150 actual value smoothing time in ms
- p4121 TM150 filter, rated line frequency
- p4122[0...11] TM150 smoothing time constant

Diagnosis / faults and alarms

10

10.1 Chapter content

This chapter provides information on the following:

- Notes regarding diagnostic functions that are available and troubleshooting in the case of a fault

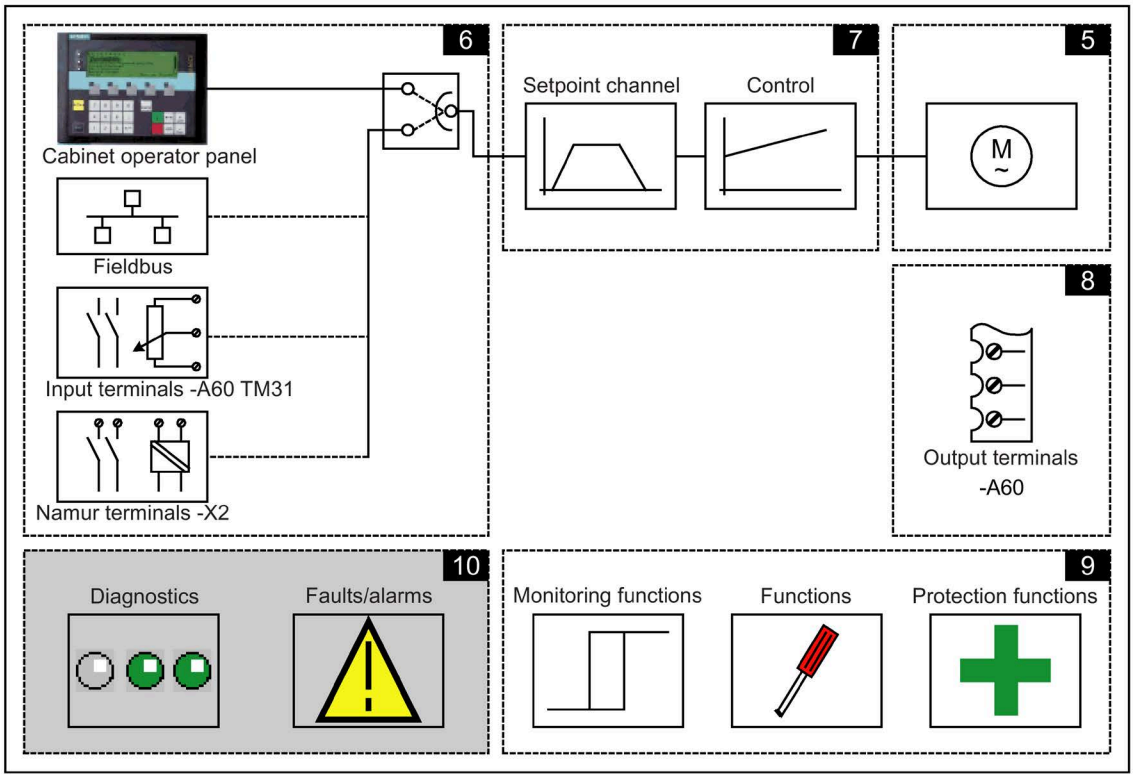

10.2 Diagnosis

Description

This section describes procedures for identifying the causes of problems and the measures you need to take to rectify them.

Note

Errors or malfunctions

If errors or malfunctions occur in the device, you must carefully check the possible causes and take the necessary steps to rectify them. If you cannot identify the cause of the problem or you discover that components are defective, your regional office or sales office should contact Siemens Service and describe the problem in more detail. Addresses of contact persons are listed in the preface.

10.2.1 Diagnostics via LEDs

Control Unit (-A10)

Table 10- 1 Description of the LEDs on the CU320-2 DP Control Unit

LED	Color	State	Description
RDY (READY)	---	OFF	The electronic power supply is missing or lies outside the permissible tolerance range.
	Green	Continuous light	The component is ready for operation and cyclic DRIVE-CLiQ communication is taking place.
		0.5 Hz flashing light	Commissioning/reset
		2 Hz flashing light	Writing to the memory card.
		Flashing light - 0.5 s on 3 s off	PROFIenergy energy saving mode is active (in conjunction with option G33 - CBE20)
	Red	2 Hz flashing light	General fault
	Red/green	0.5 Hz flashing light	Control Unit is ready for operation. However, there are no software licenses.
	Orange	0.5 Hz flashing light	Firmware update in progress for the connected DRIVE-CLiQ components.
		2 Hz flashing light	Firmware update of components has been completed. Wait for POWER ON of the respective component.
	Green/orange or red/orange	2 Hz flashing light	Component detection via LED is activated (p0124[0]). **Note:** Both options depend on the LED status when component recognition is activated using p0124[0] = 1.

LED	Color	State	Description
COM PROFIdrive cyclic operation	---	OFF	Cyclic communication is not (yet) running. **Note:** The PROFIdrive is ready for communication when the Control Unit is ready for operation (see LED RDY).
	Green	Continuous light	Cyclic communication is taking place.
		0.5 Hz flashing light	Cyclic communication has still not been fully established. Possible causes: - The controller is not transmitting any setpoints. - In isochronous mode, the controller did not send a Global Control or it sent a defective Global Control (GC).
	Red	0.5 Hz flashing light	PROFIBUS master is sending incorrect parameter assign-ment/configuration
		2 Hz flashing light	Cyclic bus communication has been interrupted or could not be established.
OPT (OPTION)	---	OFF	Electronic power supply missing or outside permissible tolerance range. The component is not ready for operation. The Option Board is missing or an associated drive object has not been created.
	Green	Continuous light	Option board is ready.
		0.5 Hz flashing light	Depends on the option board used [1].
	Red	Continuous light	Depends on the option board used [1].
		0.5 Hz flashing light	Depends on the option board used [1].
		2 Hz flashing light	This component has at least one fault. The option board is not ready (e.g., after switching on).
RDY and COM	Red	2 Hz flashing light	Bus error - communication has been interrupted.
RDY and OPT	Orange	0.5 Hz flashing light	The firmware of the connected option board is being updated.

[1] Any individual behaviors of the LED OPT are described at the respective Option Board.

Table 10- 2 Description of the LEDs on the CU320-2 PN Control Unit

LED	Color	State	Description
RDY (READY)	---	OFF	The electronic power supply is missing or lies outside the permissible tolerance range.
	Green	Continuous light	The component is ready for operation and cyclic DRIVE-CLiQ communication is taking place.
		0.5 Hz flashing light	Commissioning/reset
		2 Hz flashing light	Writing to the memory card.
		Flashing light - 0.5 s on 3 s off	PROFIenergy energy saving mode is active
	Red	2 Hz flashing light	General fault
	Red/green	0.5 Hz flashing light	Control Unit is ready for operation. However, there are no software licenses.
	Orange	0.5 Hz flashing light	Firmware update in progress for the connected DRIVE-CLiQ components.
		2 Hz flashing light	Firmware update of components has been completed. Wait for POWER ON of the respective component.
	Green/orange or red/orange	2 Hz flashing light	Component detection via LED is activated (p0124[0]). **Note:** Both options depend on the LED status when component recognition is activated using p0124[0] = 1.
COM PROFIdrive cyclic operation	---	OFF	Cyclic communication is not (yet) running. **Note:** The PROFIdrive is ready for communication when the Control Unit is ready for operation (see LED RDY).
	Green	Continuous light	Cyclic communication is taking place.
		0.5 Hz flashing light	Cyclic communication is still not completely running. Possible causes: - The controller is not transferring any setpoints. - For isochronous operation, either none or a faulty Global Control (GC) has been transferred from the controller. - "Shared Device" has been selected and only one controller connected.
	Red	0.5 Hz flashing light	Bus error, incorrect parameter assignment/configuration
		2 Hz flashing light	Cyclic bus communication has been interrupted or could not be established.
OPT (OPTION)	---	OFF	Electronic power supply missing or outside permissible tolerance range. The component is not ready for operation. The Option Board is missing or an associated drive object has not been created.
	Green	Continuous light	Option board is ready.
		0.5 Hz flashing light	Depends on the option board used [1].
	Red	Continuous light	Depends on the option board used [1].
		0.5 Hz flashing light	Depends on the option board used [1].
		2 Hz flashing light	This component has at least one fault. The option board is not ready (e.g., after switching on).
RDY and COM	Red	2 Hz flashing light	Bus error - communication has been interrupted.
RDY and OPT	Orange	0.5 Hz flashing light	The firmware of the connected option board is being updated.

[1] Any individual behaviors of the LED OPT are described at the respective Option Board.

Customer Terminal Block TM31 (-A60)

Table 10- 3 Description of the LEDs on the TM31

LED	Color	State	Description
READY	---	OFF	The electronic power supply is missing or lies outside the permissible tolerance range.
	Green	Continuous light	The component is ready for operation and cyclic DRIVE-CLiQ communication is taking place.
	Orange	Continuous light	DRIVE-CLiQ communication is being established.
	Red	Continuous light	This component has at least one fault. **Remark:** The LED is activated irrespective of whether the corresponding messages have been reconfigured.
	Green/red	0.5 Hz flashing light	Firmware is being downloaded.
		2 Hz flashing light	Firmware download is complete. Waiting for POWER ON.
	Green / orange or red / orange	Flashing light	Detection of the components via LED is activated (p0154). **Remark:** Both options depend on the LED status when module recognition is activated via p0154 = 1.

Control Interface Module – interface module in the Active Line Module (-G1)

Table 10- 4 Description of the LEDs "READY" and "DC LINK" on the Control Interface Module

LED state		Description
READY	DC LINK	
Off	Off	The electronic power supply is missing or lies outside the permissible tolerance range.
Green	--- [1]	The component is ready for operation and cyclic DRIVE-CLiQ communication is taking place.
	Orange	The component is ready for operation and cyclic DRIVE-CLiQ communication is taking place. The DC link voltage is present.
	Red	The component is ready for operation and cyclic DRIVE-CLiQ communication is taking place. The DC-link voltage lies outside the permitted tolerance range.
Orange	Orange	DRIVE-CLiQ communication is being established.
Red	--- [1]	This component has at least one fault. **Remark:** The LED is activated irrespective of whether the corresponding messages have been reconfigured.
Flashing light 0.5 Hz: green/red	--- [1]	Firmware is being downloaded.
Flashing light 2 Hz: green/red	--- [1]	Firmware download is complete. Waiting for POWER ON.
Flashing light 2 Hz: green/orange or red/orange	--- [1]	Detection of the components via LED is activated (p0124). Note: Both options depend on the LED status when module recognition is activated via p0124 = 1.

[1] Irrespective of the status of the LED "DC LINK"

Table 10- 5 Meaning of the LED "POWER OK" on the Control Interface Module

LED	Color	State	Description
POWER OK	Green	Off	DC link voltage < 100 V and voltage at -X9:1/2 less than 12 V.
		On	The component is ready for operation.
		Flashing light	There is a fault. If the LED continues to flash after you have performed a POWER ON, please contact your Siemens service center.

WARNING

Touching live parts of the DC link

Irrespective of the state of the LED "DC LINK", hazardous DC link voltages can always be present. This means that if live parts are touched, this can result in death or serious injury.

- Observe the warning information on the component.

Control Interface Module – interface module in the Motor Module (-T1)

Table 10- 6 Description of the LEDs "READY" and "DC LINK" on the Control Interface Module

LED state		Description
READY	**DC LINK**	
Off	Off	The electronic power supply is missing or lies outside the permissible tolerance range.
Green	--- [1]	The component is ready for operation and cyclic DRIVE-CLiQ communication is taking place.
	Orange	The component is ready for operation and cyclic DRIVE-CLiQ communication is taking place. The DC link voltage is present.
	Red	The component is ready for operation and cyclic DRIVE-CLiQ communication is taking place. The DC-link voltage lies outside the permitted tolerance range.
Orange	Orange	DRIVE-CLiQ communication is being established.
Red	--- [1]	This component has at least one fault. **Remark:** The LED is activated irrespective of whether the corresponding messages have been reconfigured.
Flashing light 0.5 Hz: green/red	--- [1]	Firmware is being downloaded.
Flashing light 2 Hz: green/red	--- [1]	Firmware download is complete. Waiting for POWER ON.
Flashing light 2 Hz: green/orange or red/orange	--- [1]	Detection of the components via LED is activated (p0124). Note: Both options depend on the LED status when module recognition is activated via p0124 = 1.

[1] Irrespective of the status of the LED "DC LINK"

Table 10- 7 Meaning of the LED "POWER OK" on the Control Interface Module

LED	Color	State	Description
POWER OK	Green	Off	DC link voltage < 100 V and voltage at -X9:1/2 less than 12 V.
		On	The component is ready for operation.
		Flashing light	There is a fault. If the LED continues to flash after you have performed a POWER ON, please contact your Siemens service center.

WARNING

Touching live parts of the DC link

Irrespective of the state of the LED "DC LINK", hazardous DC link voltages can always be present. This means that if live parts are touched, this can result in death or serious injury.

- Observe the warning information on the component.

VSM - Interface Module in the Active Interface Module (-A2)

Table 10- 8 Description of the LEDs on the Voltage Sensing Module

LED	Color	State	Description
READY	---	OFF	The electronic power supply is missing or lies outside the permissible tolerance range.
	Green	Continuous light	The component is ready for operation and cyclic DRIVE-CLiQ communication is taking place.
	Orange	Continuous light	DRIVE-CLiQ communication is being established.
	Red	Continuous light	This component has at least one fault. **Remark:** The LED is activated irrespective of whether the corresponding messages have been reconfigured.
	Green/red	0.5 Hz flashing light	Firmware is being downloaded.
		2 Hz flashing light	Firmware download is complete. Waiting for POWER ON.
	Green / orange or red / orange	Flashing light	Detection of the components via LED is activated (p0144). **Remark:** Both options depend on the LED status when module recognition is activated via p0144 = 1.

SMC10 – encoder evaluation (-B81)

Table 10- 9 Description of the LEDs on the SMC10

LED	Color	State	Description
READY	---	OFF	The electronic power supply is missing or lies outside the permissible tolerance range.
	Green	Continuous light	The component is ready for operation and cyclic DRIVE-CLiQ communication is taking place.
	Orange	Continuous light	DRIVE-CLiQ communication is being established.
	Red	Continuous light	This component has at least one fault. **Remark:** The LED is activated irrespective of whether the corresponding messages have been reconfigured.
	Green/red	0.5 Hz flashing light	Firmware is being downloaded.
		2 Hz flashing light	Firmware download is complete. Waiting for POWER ON.
	Green / orange or red / orange	2 Hz flashing light	Detection of the components via LED is activated (p0144). **Remark:** Both options depend on the LED status when module recognition is activated via p0144 = 1.

SMC20 – encoder evaluation (-B82)

Table 10- 10 Description of the LEDs on the SMC20

LED	Color	State	Description
READY	---	OFF	The electronic power supply is missing or lies outside the permissible tolerance range.
	Green	Continuous light	The component is ready for operation and cyclic DRIVE-CLiQ communication is taking place.
	Orange	Continuous light	DRIVE-CLiQ communication is being established.
	Red	Continuous light	This component has at least one fault. **Remark:** The LED is activated irrespective of whether the corresponding messages have been reconfigured.
	Green/red	0.5 Hz flashing light	Firmware is being downloaded.
		2 Hz flashing light	Firmware download is complete. Waiting for POWER ON.
	Green / orange or red / orange	2 Hz flashing light	Detection of the components via LED is activated (p0144). **Remark:** Both options depend on the LED status when module recognition is activated via p0144 = 1.

SMC30 – encoder evaluation (-B83)

Table 10- 11 Description of the LEDs on the SMC30

LED	Color	State	Description
READY	---	OFF	The electronic power supply is missing or lies outside the permissible tolerance range.
	Green	Continuous light	The component is ready for operation and cyclic DRIVE-CLiQ communication is taking place.
	Orange	Continuous light	DRIVE-CLiQ communication is being established.
	Red	Continuous light	This component has at least one fault. **Remark:** The LED is activated irrespective of whether the corresponding messages have been reconfigured.
	Green/red	0.5 Hz flashing light	Firmware is being downloaded.
		2 Hz flashing light	Firmware download is complete. Waiting for POWER ON.
	Green / orange or red / orange	2 Hz flashing light	Detection of the components via LED is activated (p0144). **Remark:** Both options depend on the LED status when module recognition is activated via p0144 = 1.
OUT>5 V	---	OFF	The electronic power supply is missing or lies outside the permissible tolerance range. Power supply ≤ 5 V.
	Orange	Continuous light	Electronic power supply for measuring system present. Supply voltage > 5 V. Notice: You must ensure that the connected encoder can be operated with a 24 V supply. Operating an encoder designed for a 5 V supply with a 24 V supply can damage the encoder electronics beyond repair.

CBE20 – Communication Board Ethernet

Table 10- 12 Description of the LEDs at ports 1-4 of the X1400 interface on the CBE20

LED	Color	State	Description
Link port	---	OFF	The electronic power supply is missing or lies outside the permissible tolerance range (link missing or defective).
	Green	Continuous light	A different device is connected to port x and a physical connection exists.
Activity port	---	OFF	The electronic power supply is missing or lies outside the permissible tolerance range (no activity).
	Yellow	Continuous light	Data is being received or sent at port x.

Table 10- 13 Description of the Sync and Fault LEDs on the CBE20

LED	Color	State	Description
Fault	---	OFF	If the link port LED is green: The CBE20 is operating normally, data is being exchanged with the configured IO Controller.
	Red	Flashing light	- The response monitoring time has elapsed. - Communication has been interrupted. - The IP address is incorrect. - Incorrect or missing configuration. - Incorrect parameter assignment. - Incorrect or missing device name. - IO controller not present/switched off but Ethernet connection present. - Other CBE20 errors.
		Continuous light	CBE20 bus fault - No physical connection to a subnet/switch. - Incorrect transmission rate. - Full-duplex transmission not activated.
Sync	---	OFF	If the link port LED is green: Control Unit task system is not synchronized with the IRT clock. An internal substitute clock is generated.
	Green	Flashing light	Control Unit task system has synchronized with the IRT clock and data is being exchanged.
		Continuous light	Task system and MC-PLL have synchronized with the IRT clock.

Table 10- 14 Description of the OPT LED on the Control Unit

LED	Color	State	Description
OPT	---	OFF	Electronics power supply is missing or outside permissible tolerance range. The CBE20 is defective or not inserted.
	Green	Continuous light	CBE20 is ready and cyclic communication is taking place.
		0.5 Hz flashing light	CBE20 is ready but cyclic communication is not running. Possible causes: - Communication is being established. -At least one fault is present.
	Red	Continuous light	Cyclic communication via PROFINET has not yet been established. However, acyclic communication is possible. SINAMICS is waiting for a parameterization/configuration telegram.
		0.5 Hz flashing light	The firmware download to the CBE20 has failed. Possible causes: - The memory card of the Control Unit is faulty. - The CBE20 is out of order. The CBE20 cannot be used in this state.
		2 Hz flashing light	Communication between the Control Unit and the CBE20 is faulty. Possible causes: - The CBE20 was removed following power-up. - The CBE20 is defective.
	Orange	0.5 Hz flashing light	Firmware is being updated.

TM150 - Terminal Module (-A151)

Table 10- 15 Description of the LEDs on the TM150

LED	Color	State	Description
READY	-	OFF	The electronic power supply is missing or lies outside the permissible tolerance range.
	Green	Continuous light	The component is ready for operation and cyclic DRIVE-CLiQ communication is taking place.
	Orange	Continuous light	DRIVE-CLiQ communication is being established.
	Red	Continuous light	This component has at least one fault. **Remark:** The LED is activated irrespective of whether the corresponding messages have been reconfigured.
	Green/red	Flashing light 0.5 Hz	Firmware is being downloaded.
		Flashing light 2 Hz	Firmware download is complete. Waiting for POWER ON.
	Green / orange or red / orange	Flashing light 2 Hz	Detection of the components via LED is activated (p0154). **Remark:** Both options depend on the LED status when module recognition is activated via p0154 = 1.

10.2.2 Diagnostics via parameters

All Objects: key diagnostic parameters (details in List Manual)

Parameter	Name Description
r0945	Fault code
	Displays the fault number. Index 0 is the most recent fault (last fault to have occurred).
r0948	Fault time received in milliseconds
	Displays the system runtime in ms at which the fault occurred.
r0949	Fault value
	Displays additional information about the fault. This information is required for detailed fault diagnosis.
r2109	Fault time removed in milliseconds
	Displays the system runtime in ms at which the fault was rectified.
r2122	Alarm code
	Displays the numbers of alarms that have occurred
r2123	Alarm time received in milliseconds
	Displays the system runtime in ms at which the alarm occurred.
r2124	Alarm value
	Displays additional information about the alarm. This information is required for detailed alarm diagnosis.
r2125	Alarm time removed in milliseconds
	Displays the system runtime in ms at which the alarm was rectified.

Control Unit: key diagnostic parameters (details in List Manual)

Parameter	Name Description
r0002	Control Unit status display
	Status display for the Control Unit
r0018	Control Unit firmware version
	Displays the firmware version of the Control Unit. For the display parameters for the firmware version of the other connected components, see the parameter description in the List Manual.
r0037	Control Unit temperature
	Displays the measured temperature on the Control Unit.
r0721	CU digital inputs, terminal actual value
	Displays the actual value at the digital input terminals on the CU. This parameter shows the actual value, uninfluenced by simulation mode of the digital inputs.
r0722	CO/BO: CU digital inputs, status
	Displays the status of the digital inputs on the CU. This parameter shows the status of the digital inputs under the influence of simulation mode of the digital inputs.
r0747	CU, digital outputs status
	Display of the CU digital output status. This parameter shows the status of the digital inputs under the influence of simulation mode of the digital inputs.
r2054	PROFIBUS status
	Displays the status of the Profibus interface.

Parameter	Name Description
r8937	PN diagnostics Display to diagnose the cyclic PROFINET connections.
r9976[0..7]	System utilization Displays the system load. The individual values (computation load and cyclic load) are measured over short time slices; from these values, the maximum, the minimum and the average value are generated and displayed in the appropriate indices. Further, the degree of memory utilization of the data and program memory is displayed.

Supply: key diagnostic parameters (details in List Manual)

Parameter	Name Description
r0002	Infeed operating display The value provides information about the current operating status and the conditions necessary to reach the next status.
r0024	CO: Line frequency smoothed Displays the smoothed line supply frequency.
r0025	CO: Infeed input voltage, smoothed Displays the smoothed actual value of the input voltage. This voltage is present at the line supply connection of the infeed voltage.
r0026	CO: DC link voltage smoothed Displays the smoothed actual value of the DC link.
r0027	CO: Absolute actual current, smoothed Displays the smoothed actual value of the current.
r0037	CO: Power unit temperatures Displays the measured temperatures in the power unit.
r0046	CO/BO: Missing enable signals Displays missing enable signals that are preventing the closed-loop infeed control from being commissioned.
r0050	CO/BO: Command Data Set CDS effective Displays the effective command data set (CDS)
r0066	CO: Line frequency Displays the line frequency.
r0070	CO: Actual DC link voltage Displays the actual measured value of the DC link voltage.
r0072	CO: Input voltage Displays the actual input voltage of the power unit (Line Module).
r0082	CO: Active power actual value Displays the instantaneous active power.
r0206	Rated power unit power Displays the rated power unit power for various load duty cycles.
r0207	Rated power unit current Displays the rated power unit power for various load duty cycles.
r0208	Rated power unit line supply voltage Displays the rated line supply voltage of the power unit.

Parameter	Name Description
r0209	Power unit, maximum current Displays the maximum output current of the power unit.

VECTOR: key diagnostic parameters (details in List Manual)

Parameter	Name Description
r0002	Drive operating display The value provides information about the current operating status and the conditions necessary to reach the next status.
r0020	Speed setpoint smoothed Displays the actual smoothed speed/velocity setpoint at the input of the speed/velocity controller or U/f characteristic (after the interpolator).
r0021	CO: Actual speed value smoothed Displays the smoothed actual value of the motor speed/velocity.
r0024	CO: Output frequency, smoothed Displays the smoothed converter frequency.
r0026	CO: DC link voltage smoothed Displays the smoothed actual value of the DC link.
r0027	CO: Absolute actual current, smoothed Displays the smoothed actual value of the current.
r0031	Actual torque smoothed Displays the smoothed actual torque.
r0034	CO: Motor utilization Displays the motor utilization from the thermal I2t motor model.
r0035	CO: Motor temperature If r0035 does not equal -200.0 °C, the following applies: • This temperature indicator is valid. • An KTY sensor is connected. • If using an asynchronous motor, the thermal motor model is activated (p0600 = 0 or p0601 = 0). If r0035 equals -200.0 °C, the following applies: • This temperature indicator is invalid (temperature sensor fault). • An PTC sensor is connected. If using a synchronous motor, the thermal motor model is activated (p0600 = 0 or p0601 = 0).
r0037	CO: Power unit temperatures Displays the measured temperatures in the power unit.
r0046	CO/BO: Missing enable signals Displays missing enable signals that are preventing the closed-loop drive control from being commissioned.
r0049	Motor data set/encoder data set active (MDS, EDS) Displays the effective motor data set (MDS) and the effective encoder data sets (EDS).
r0050	CO/BO: Command Data Set CDS effective Displays the effective command data set (CDS)

Parameter	Name Description
r0051	CO/BO: Drive Data Set DDS effective
	Effective drive data set (DDS) display.
r0056	CO/BO: Status word, closed-loop control
	Displays the status word of the closed-loop control.
r0063	CO: Speed actual value
	Displays the actual speed for speed control and U/f control.
r0066	CO: Output frequency
	Displays the output frequency of the Motor Module.
r0070	CO: Actual DC link voltage
	Displays the measured actual value of the DC link voltage.
r0072	CO: Output voltage
	Displays the actual output voltage of the power unit (Motor Module).
r0082	CO: Active power actual value
	Displays the instantaneous active power.
r0206	Rated power unit power
	Displays the rated power unit power for various load duty cycles.
r0207	Rated power unit current
	Displays the rated power unit power for various load duty cycles.
r0208	Rated power unit line supply voltage
	Displays the rated line supply voltage of the power unit.
r0209	Power unit, maximum current
	Displays the maximum output current of the power unit.

TM31: key diagnostic parameters (details in List Manual)

Parameter	Name Description
r0002	TM31 operating display
	Operating display for Terminal Board 31 (TB31).
r4021	TM31 digital inputs, terminal actual value
	Displays the actual value at the digital input terminals on the TM31. This parameter shows the actual value, uninfluenced by simulation mode of the digital inputs.
r4022	CO/BO: TM31 digital inputs, status
	Displays the status of the digital inputs on the TM31. This parameter shows the status of the digital inputs under the influence of simulation mode of the digital inputs.
r4047	TM31 digital outputs, status
	Displays the status of the TM31 digital outputs. Inversion via p4048 is taken into account.

10.2.3 Indicating and rectifying faults

The device features a wide range of functions that protect the drive against damage if a fault occurs (faults and alarms).

Indicating faults and alarms

If a fault occurs, the drive displays the fault and/or alarm on the AOP30 operator panel. Faults are indicated by the red "FAULT" LED and a fault screen is automatically displayed. You can use the F1 Help function to call up information about the cause of the fault and how to remedy it. You can use F5 Ack. to acknowledge a stored fault.

Any alarms are displayed by the yellow flashing "ALARM" LED. The system also displays a note in the status bar providing information on the cause.

Every fault and alarm is entered in the fault/alarm buffer along with time the error occurred. The time stamp refers to the relative system time in milliseconds (r0969).

Activate the "Set date/time - AOP synchronization -> Drive" setting to date- and time-stamp errors on the AOP30.

What is a fault?

A fault is a message from the drive indicating an error or other exceptional (unwanted) status. This could be caused by a fault within the converter or an external fault triggered, for example, from the winding temperature monitor for the induction motor. The faults are displayed and can be reported to a higher-level control system via PROFIdrive. In the delivery condition, the message "Drive fault" is also sent to a relay output. Once you have rectified the cause of the fault, you have to acknowledge the fault message.

What is an alarm?

An alarm is the response to a fault condition identified by the drive. It does not result in the drive being switched off and does not have to be acknowledged. Alarms are "self acknowledging", that is, they are reset automatically when the cause of the alarm has been eliminated.

10.3 Overview of warnings and faults

If a fault occurs, the drive indicates the fault and/or alarm. Faults and alarms are listed in a fault/alarm list, together with the following information:

- Fault/alarm number
- Standard drive response
- Description of the possible cause of the fault/alarm
- Description of the procedure for rectifying the problem
- Standard fault acknowledgement after it has been rectified

Note

List of faults and alarms

The list of faults and alarms is included on the customer DVD!

It also contains descriptions of possible fault responses (OFF1, OFF2, ...).

Note

Faults and alarms wired and preset at the factory

The faults and alarms described below have been wired specially for the cabinet units listed in this document and preset via macro. In this way, the appropriate reaction is triggered by the additional components in the cabinet unit when faults and alarms are signaled.

It is possible to reprogram the faults and alarms described, provided that the stated options are not included in the scope of the equipment.

10.3.1 "External alarm 1"

Causes

Alarm A7850 ("External alarm 1") is triggered by the following optional protection devices in the cabinet unit:

- Thermistor motor protection unit alarm (option L83)
- PT100 Evaluation Unit (Option L86)

Remedy

When a fault is indicated, the following procedure is recommended:

1. Identify the cause by examining the specified devices (display or LEDs).
2. Check the fault display on the relevant protection device and establish the fault.
3. Rectify the displayed fault with the help of the appropriate operating instructions provided in "Additional Operating Instructions".

10.3.2 "External fault 1"

Causes

Fault code F7860 ("External Fault 1") is triggered by the following optional protection devices in the cabinet unit:

- Thermistor motor protection unit shutdown (option L84)
- PT100 Evaluation Unit (Option L86)

Remedy

When a fault is indicated, the following procedure is recommended:

1. Identify the cause by examining the specified devices (display or LEDs).
2. Check the fault display on the relevant protection device and establish the fault.
3. Rectify the displayed fault with the help of the appropriate operating instructions provided in "Additional Operating Instructions".

10.3.3 "External fault 2"

Causes

Fault code F7861 "External Fault 2" is triggered when the braking resistor available with options L61/L62/L64/L65 is subject to thermal overload, thereby activating the thermostat. The drive is switched off with OFF2.

Remedy

The cause of the braking resistor overload must be eliminated and the fault code acknowledged.

10.3.4 "External fault 3"

Causes

Fault code F7862 "External fault 3" is triggered when the braking unit fitted for options L61/L62/L64/L65 triggers a fault. The drive is switched off with OFF2.

Remedy

The cause of the braking unit overload must be eliminated and the fault code acknowledged.

Maintenance and servicing 11

11.1 Chapter content

This chapter provides information on the following:

- Maintenance and servicing procedures that have to be carried out on a regular basis to ensure the availability of the cabinet units.
- Exchanging device components when the unit is serviced
- Forming the DC link capacitors
- Upgrading the cabinet unit firmware
- Loading the new operator panel firmware from the PC.

⚠ WARNING

Not observing fundamental safety instructions and residual risks

The non-observance of the fundamental safety instructions and residual risks stated in Chapter 1 can result in accidents with severe injuries or death.

- Adhere to the fundamental safety instructions.
- When assessing the risk, take into account residual risks.

⚠ DANGER

Electric shock due to the residual charge of the DC link capacitors

Because of the DC link capacitors, a hazardous voltage is present for up to five minutes after the power supply has been switched off.

Contact with live parts can result in death or serious injury.

- Only open the device after five minutes have elapsed.
- Measure the voltage before starting work on the DCP and DCN DC link terminals.

⚠ DANGER

Electric shock from external supply voltages

When the external power supply for individual options (L50 / L55) or the external 230 V AC auxiliary supply is connected, dangerous voltages are still present at the components even when the main switch is open.

Contact with live parts can result in death or serious injury.

- Switch off any external supply voltages and the external 230 VAC auxiliary supply before opening the device.

11.2 Maintenance

The cabinet unit mainly comprises electronic components. Apart from the fan(s), the unit contains very few components that are subject to wear or require maintenance or servicing. Maintenance aims to preserve the specified condition of the cabinet unit. Dirt and contamination must be removed regularly and parts subject to wear replaced.

The following points must generally be observed.

11.2.1 Cleaning

Dust deposits

Dust deposits inside the cabinet unit must be removed at regular intervals (or at least once a year) by qualified personnel in line with the relevant safety regulations. The unit must be cleaned using a brush and vacuum cleaner, and dry compressed air (max. 1 bar) for areas that cannot be easily reached.

Ventilation

The ventilation openings in the cabinet must never be obstructed. The fan must be checked to make sure that it is functioning correctly.

Maintaining the filter medium for option M23/M43/M54

For option M23/M43/M54, the filter medium must be maintained according to the local environmental conditions. The filter medium must be regularly inspected and replaced as required.
You can obtain additional information regarding a maintenance contract from your Siemens contact person.

11.3 Maintenance

Servicing involves activities and procedures for maintaining and restoring the specified condition of the device.

Required tools

The following tools are required for replacing components:

- Standard set of tools with screwdrivers, screw wrenches, socket wrenches, etc.
- Torque wrenches 1.5 Nm up to 100 Nm
- 600 mm extension for socket wrenches

Cable and screw terminals

Cable and screw terminals must be checked regularly to ensure that they are secure in position, and if necessary, retightened. Cabling must be checked for defects. Defective parts must be replaced immediately.

Note

Maintenance intervals

The actual intervals at which maintenance procedures are to be performed depend on the installation conditions (cabinet environment) and the operating conditions.

Siemens offers its customers support in the form of a service contract. For further details, contact your regional office or sales office.

Tightening torques for screw connections

The following tightening torques apply when tightening current-conducting connections (DC link connections, motor connections, busbars, lugs) and other connections (ground connections, protective conductor connections, steel threaded connections).

Table 11- 1 Tightening torques for screw connections

Thread	Ground connections, protective conductor connections, steel threaded connections	Aluminum threaded connections, plastic, busbars, lugs
M3	1.3 Nm	0.8 Nm
M4	3 Nm	1.8 Nm
M5	6 Nm	3 Nm
M6	10 Nm	6 Nm
M8	25 Nm	13 Nm
M10	50 Nm	25 Nm
M12	88 Nm	50 Nm
M16	215 Nm	115 Nm

Note

Screw connections for protective covers

The threaded connections for the protective covers made of Makrolon may only tightened with 2.5 Nm.

Maintenance work at the main switch or circuit breaker

For an optionally installed main switch or circuit breaker, the inspection must be carried out at the intervals specified in the attached description.

11.3.1 Installation device

Description

The installation device is used for installing and removing the power blocks.

It is used as an installation aid, which is placed in front of and secured to the module. The telescopic guide support allows the withdrawable device to be adjusted according to the height at which the power blocks are installed. Once the mechanical and electrical connections have been removed, the power block can be removed from the module, whereby the power block is guided and supported by the guide rails on the withdrawable devices.

Figure 11-1 Installation device

Article number

The article number for the installation device is 6SL3766-1FA00-0AA0.

11.3.2 Using crane lifting lugs to transport power blocks

Crane lifting lugs

The power blocks are fitted with crane lifting lugs for transportation on a lifting harness in the context of replacement.

The positions of the crane lifting lugs are illustrated by arrows in the figures below.

NOTICE
Damage to the device due to improper transport Improper transport can subject the power block housing or the busbars to mechanical loads, which damage the device. • When transporting the power blocks, use a lifting harness with vertical ropes or chains. • Do not use the power block busbars to support or secure lifting harnesses.

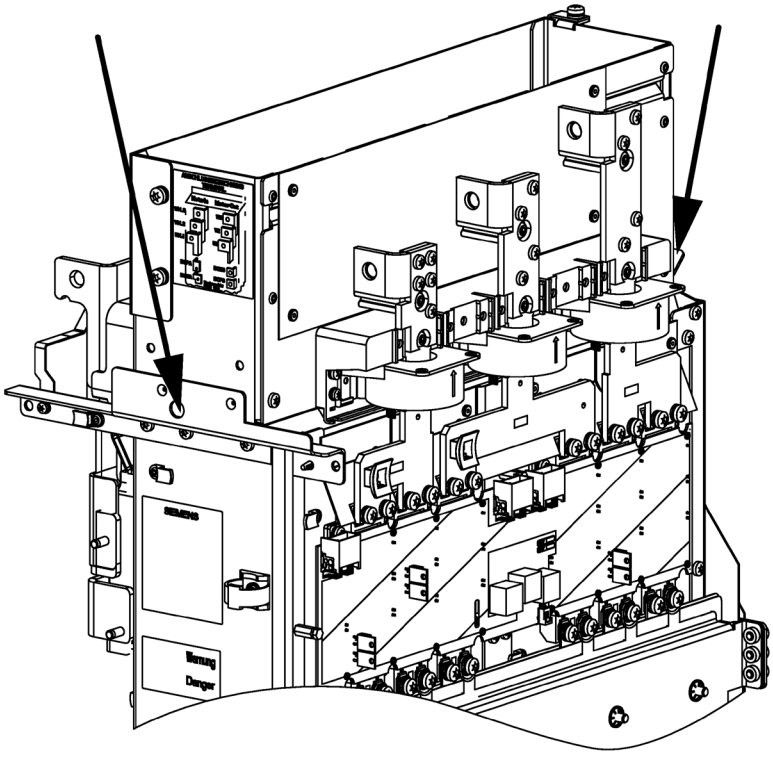

Figure 11-2 Crane lifting lugs on FX, GX power block

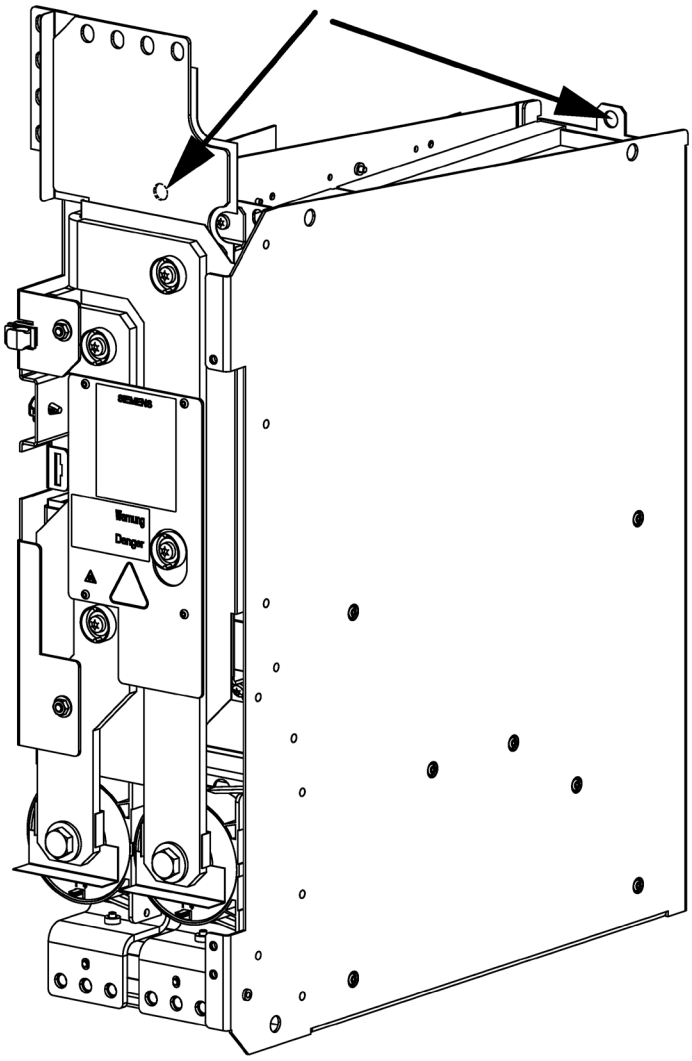

Figure 11-3 Crane lifting lugs on HX, JX power block

Note

Crane lifting lugs on power blocks HX, JX

On HX and JX power blocks, the front crane lifting lug is located behind the busbar.

11.4 Replacing components

WARNING

Improper transport and installation of devices and components

Serious injury or even death and substantial material damage can occur if the devices are not transported or installed properly.

- Transport, mount, and remove the devices and components only if you are qualified to do so.
- Take into account that the devices and components are in some cases heavy and top-heavy; take the necessary precautionary measures.
  The weights of the individual power blocks are listed in the corresponding section.

11.4.1 Replacing the filter mats

The filter mats must be checked at regular intervals. If the mats are too dirty to allow the air supply to flow normally, they must be replaced.

Note

Replacing the filter mats

Filter mat replacement is only relevant for options M23, M43 and M54.

Failure to replace dirty filter mats can cause premature thermal shutdown of the drive.

11.4.2 Replacing the Control Interface Module, frame size FX

Replacing the Control Interface Module

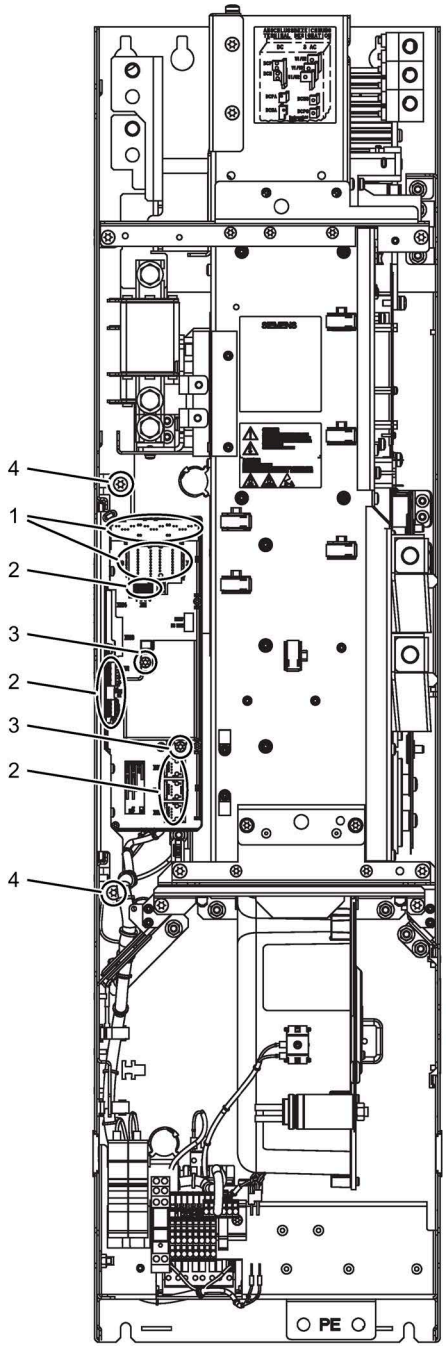

Figure 11-4 Replacing the Control Interface Module, frame size FX

Preparatory steps

- Disconnect the cabinet unit from the power supply.
- Allow unimpeded access.
- Remove the protective cover.

Removal steps

The removal steps are numbered in accordance with the numbers in the diagram.

1. Disconnect the plug-in connections for the fiber-optic cables and signal cables (5 plugs).
2. Remove DRIVE-CLiQ cables and connections at - X41, -X42, -X46 (6 connectors).
   The DRIVE-CLiQ cables should be marked to ensure that they are subsequently correctly inserted.
3. Take out the retaining screws for the IPD card (2 screws) and remove the IPD card from plug -X45 on the Control Interface Module.
4. Remove the retaining screws for the Control Interface Module (2 screws).

When removing the Control Interface Module, you have to disconnect 5 additional plugs one after the other (2 at the top, 3 below).

NOTICE

Damage to the device if signal cables are damaged when removing

Signal cables can be damaged when the Control Interface Module is removed. This can cause the device to fail.

- When removing the Control Interface Module, ensure that you do not damage any signal cables.

Installation steps

To reinstall, perform the above steps in the reverse order.

Tightening torque for the fixing screws of the Control Interface Module (M6 x 16, item ④): 6 Nm.

Note

Specifications for the installation

The tightening torques specified in the table "Tightening torques for screw connections" must be observed.

Carefully insert the plug-in connections and ensure that they are secure.

The fiber-optic cable plugs must be remounted at their original slot. Fiber-optic cables and sockets are labeled to ensure that they are assigned correctly (U11, U21, U31).

11.4.3 Replacing the Control Interface Module, frame size GX

Replacing the Control Interface Module

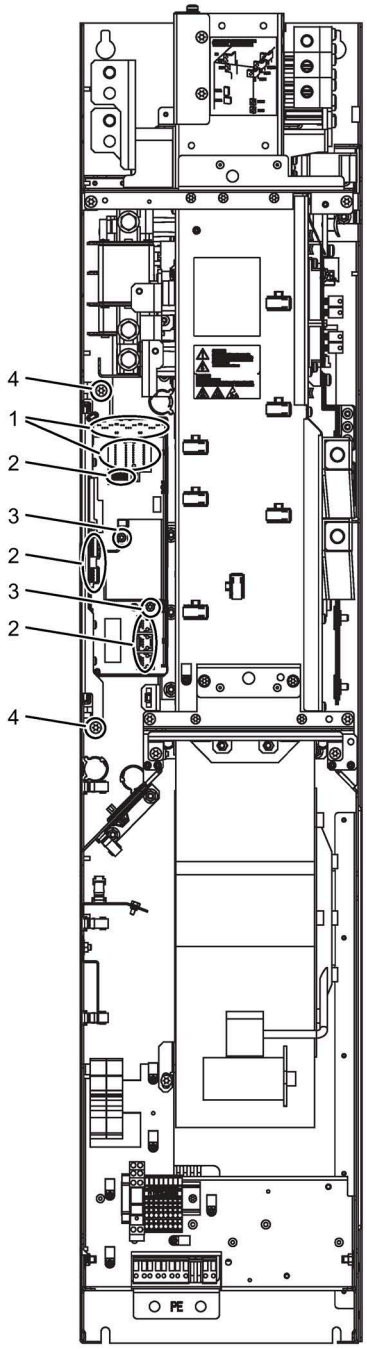

Figure 11-5 Replacing the Control Interface Module, frame size GX

Preparatory steps

- Disconnect the cabinet unit from the power supply.
- Allow unimpeded access.
- Remove the protective cover.

Removal steps

The removal steps are numbered in accordance with the numbers in the diagram.

1. Disconnect the plug-in connections for the fiber-optic cables and signal cables (5 plugs).
2. Remove DRIVE-CLiQ cables and connections at - X41, -X42, -X46 (6 connectors).
   The DRIVE-CLiQ cables should be marked to ensure that they are subsequently correctly inserted.
3. Take out the retaining screws for the IPD card (2 screws) and remove the IPD card from plug -X45 on the Control Interface Module.
4. Remove the retaining screws for the Control Interface Module (2 screws).

When removing the Control Interface Module, you have to disconnect 5 additional plugs one after the other (2 at the top, 3 below).

NOTICE

Damage to the device if signal cables are damaged when removing

Signal cables can be damaged when the Control Interface Module is removed. This can cause the device to fail.

- When removing the Control Interface Module, ensure that you do not damage any signal cables.

Installation steps

To reinstall, perform the above steps in the reverse order.

Tightening torque for the fixing screws of the Control Interface Module (M6 x 16, item ④): 6 Nm.

Note

Specifications for the installation

The tightening torques specified in the table "Tightening torques for screw connections" must be observed.

Carefully insert the plug-in connections and ensure that they are secure.

The fiber-optic cable plugs must be remounted at their original slot. Fiber-optic cables and sockets are labeled to ensure that they are assigned correctly (U11, U21, U31).

11.4.4 Replacing the Control Interface Module, frame size HX

Replacing the Control Interface Module

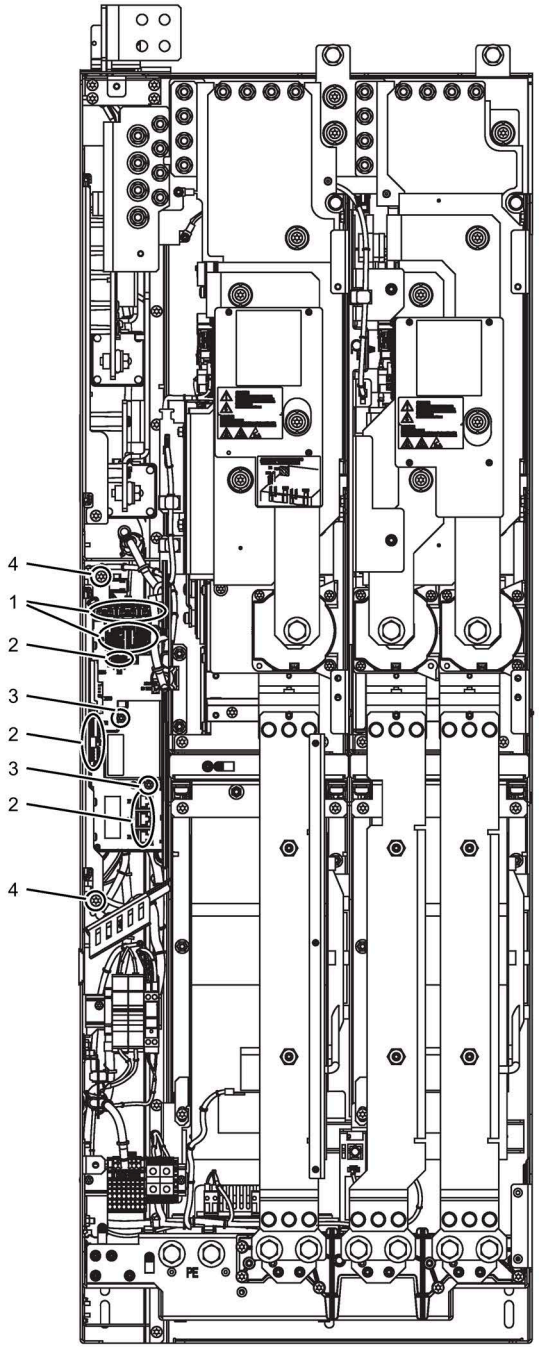

Figure 11-6 Replacing the Control Interface Module, frame size HX

Preparatory steps

- Disconnect the cabinet unit from the power supply.
- Allow unimpeded access.
- Remove the protective cover.

Removal steps

The removal steps are numbered in accordance with the numbers in the diagram.

1. Disconnect the plug-in connections for the fiber-optic cables and signal cables (5 plugs).
2. Remove DRIVE-CLiQ cables and connections at - X41, -X42, -X46 (6 connectors).
   The DRIVE-CLiQ cables should be marked to ensure that they are subsequently correctly inserted.
3. Take out the retaining screws for the IPD card (2 screws) and remove the IPD card from plug -X45 on the Control Interface Module.
4. Remove the retaining screws for the Control Interface Module (2 screws).

When removing the Control Interface Module, you have to disconnect 5 additional plugs one after the other (2 at the top, 3 below).

NOTICE

Damage to the device if signal cables are damaged when removing

Signal cables can be damaged when the Control Interface Module is removed. This can cause the device to fail.

- When removing the Control Interface Module, ensure that you do not damage any signal cables.

Installation steps

To reinstall, perform the above steps in the reverse order.

Tightening torque for the fixing screws of the Control Interface Module (M6 x 16, item ④): 6 Nm.

Note

Specifications for the installation

The tightening torques specified in the table "Tightening torques for screw connections" must be observed.

Carefully insert the plug-in connections and ensure that they are secure.

The fiber-optic cable plugs must be remounted at their original slot. Fiber-optic cables and sockets are labeled to ensure that they are assigned correctly (U11, U21, U31).

11.4.5 Replacing the Control Interface Module, frame size JX

Replacing the Control Interface Module

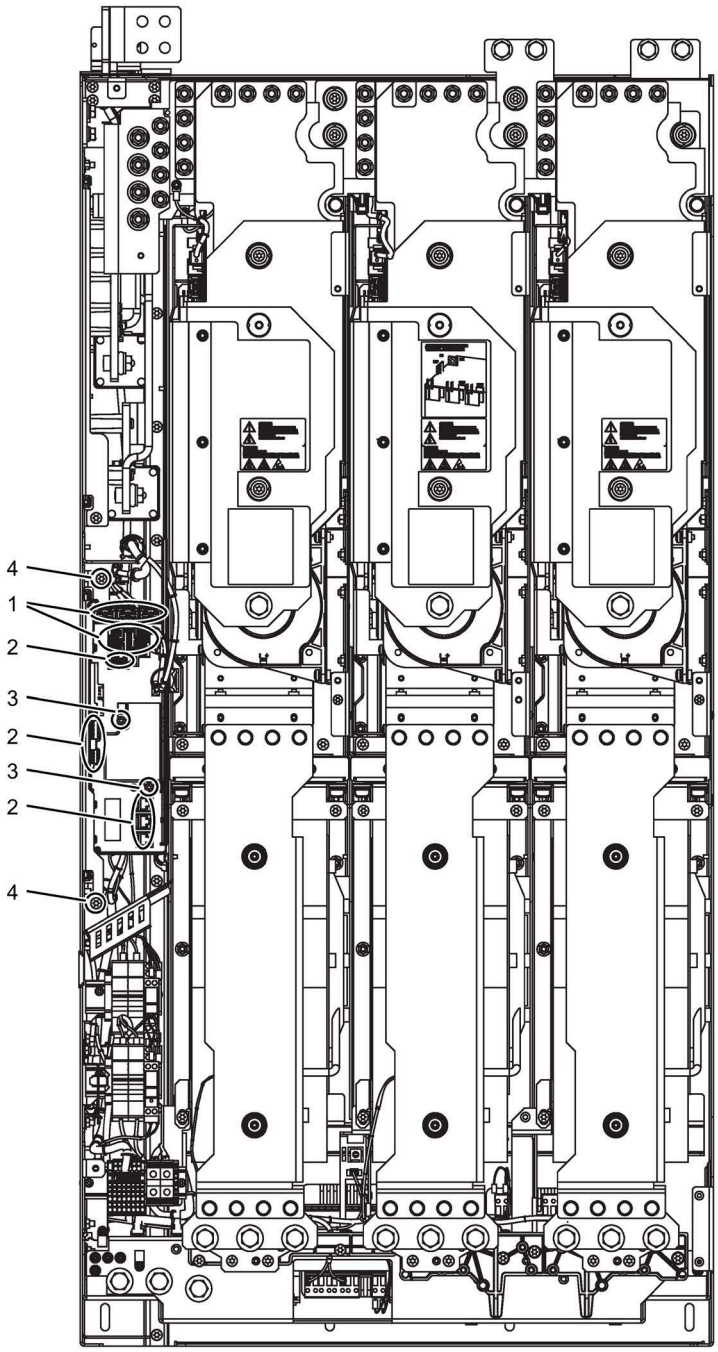

Figure 11-7 Replacing the Control Interface Module, frame size JX

Preparatory steps

- Disconnect the cabinet unit from the power supply.
- Allow unimpeded access.
- Remove the protective cover.

Removal steps

The removal steps are numbered in accordance with the numbers in the diagram.

1. Disconnect the plug-in connections for the fiber-optic cables and signal cables (5 plugs).
2. Remove DRIVE-CLiQ cables and connections at - X41, -X42, -X46 (6 connectors).
   The DRIVE-CLiQ cables should be marked to ensure that they are subsequently correctly inserted.
3. Take out the retaining screws for the IPD card (2 screws) and remove the IPD card from plug -X45 on the Control Interface Module.
4. Remove the retaining screws for the Control Interface Module (2 screws).

When removing the Control Interface Module, you have to disconnect 5 additional plugs one after the other (2 at the top, 3 below).

NOTICE
Damage to the device if signal cables are damaged when removing Signal cables can be damaged when the Control Interface Module is removed. This can cause the device to fail. • When removing the Control Interface Module, ensure that you do not damage any signal cables.

Installation steps

To reinstall, perform the above steps in the reverse order.

Tightening torque for the fixing screws of the Control Interface Module (M6 x 16, item ④): 6 Nm.

Note

Specifications for the installation

The tightening torques specified in the table "Tightening torques for screw connections" must be observed.

Carefully insert the plug-in connections and ensure that they are secure.

The fiber-optic cable plugs must be remounted at their original slot. Fiber-optic cables and sockets are labeled to ensure that they are assigned correctly (U11, U21, U31).

11.4.6 Replacing the power block (frame size FX)

Replacing the power block

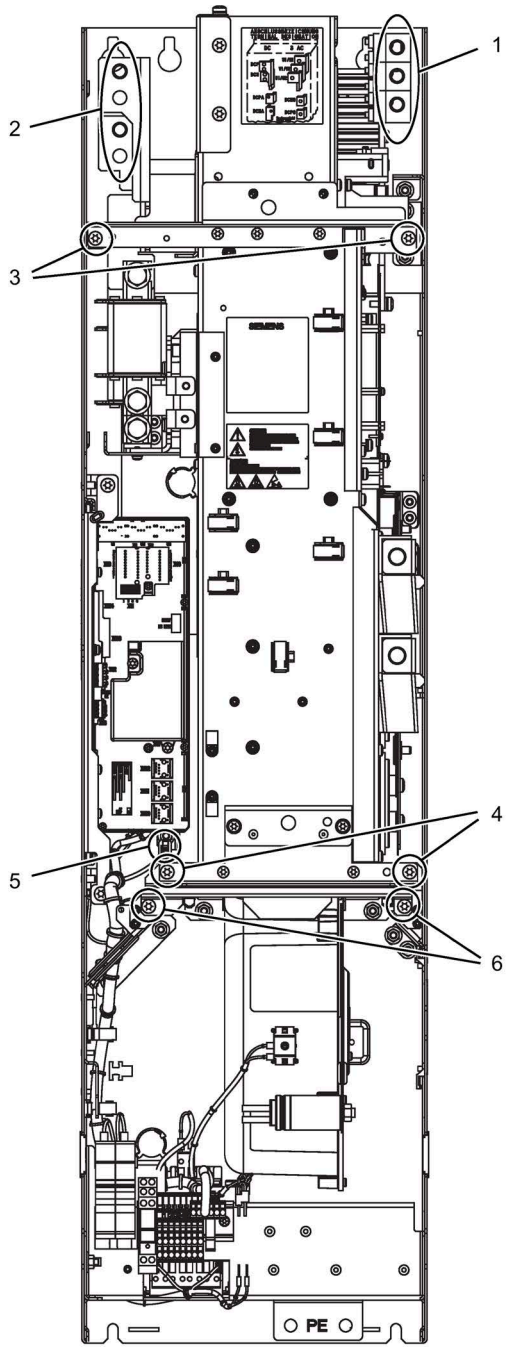

Figure 11-8 Replacing the power block, frame size FX

Preparatory steps

- Disconnect the cabinet unit from the power supply.
- Allow unimpeded access to the power block.
- Remove the protective cover.
- Removing the Control Interface Module (see corresponding section)

Removal steps

The removal steps are numbered in accordance with the numbers in the diagram.

1. Unscrew the connection to the line or to the motor (3 screws).
2. Unscrew the connection to the DC link (4 screws).
3. Remove the retaining screws at the top (2 screws).
4. Remove the retaining screws at the bottom (2 screws).
5. Disconnect the plug for the thermocouple.
6. Unscrew the two retaining screws for the fan and attach the equipment for assembling the power block at this position.

You can now remove the power block.

Note

The power block weighs approx. 66 kg!

NOTICE

Damage to the device if signal cables are damaged when removing

Signal cables can be damaged when the power block is removed. This can cause the device to fail.

- When removing the power block, ensure that you do not damage any signal cables.

Installation steps

To reinstall, perform the above steps in the reverse order.

Note

Specifications for the installation

The tightening torques specified in the table "Tightening torques for screw connections" must be observed.

Carefully insert the plug-in connections and ensure that they are secure.

11.4.7 Replacing the power block (frame size GX)

Replacing the power block

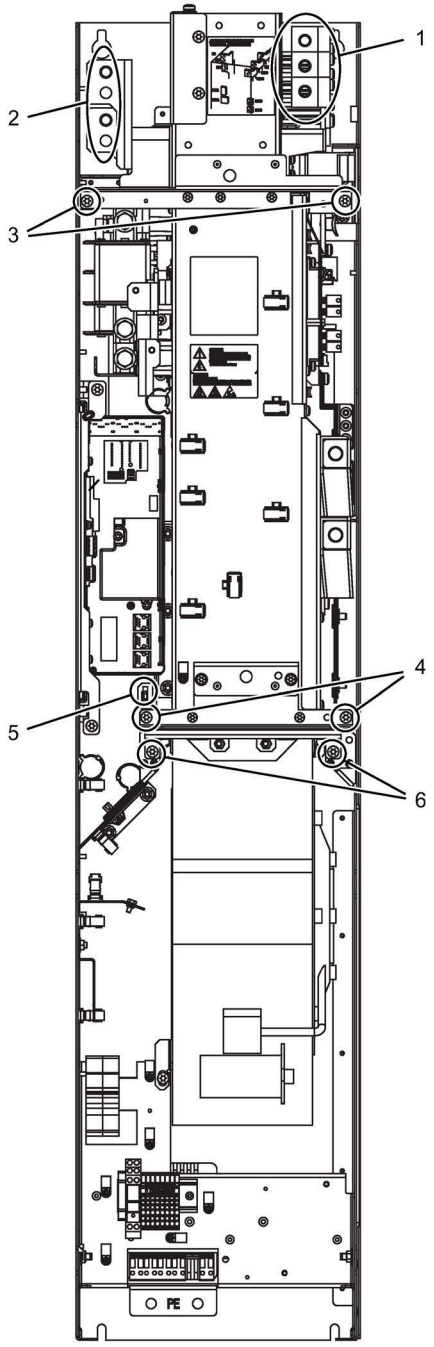

Figure 11-9 Replacing the power block, frame size GX

Preparatory steps

- Disconnect the cabinet unit from the power supply.
- Allow unimpeded access to the power block.
- Remove the protective cover.
- Removing the Control Interface Module (see corresponding section)

Removal steps

The removal steps are numbered in accordance with the numbers in the diagram.

1. Unscrew the connection to the line or to the motor (3 screws).
2. Unscrew the connection to the DC link (4 screws).
3. Remove the retaining screws at the top (2 screws).
4. Remove the retaining screws at the bottom (2 screws).
5. Disconnect the plug for the thermocouple.
6. Unscrew the two retaining screws for the fan and attach the equipment for assembling the power block at this position.

You can now remove the power block.

Note

The power block weighs approx. 89 kg!

NOTICE

Damage to the device if signal cables are damaged when removing

Signal cables can be damaged when the power block is removed. This can cause the device to fail.

- When removing the power block, ensure that you do not damage any signal cables.

Installation steps

To reinstall, perform the above steps in the reverse order.

Note

Specifications for the installation

The tightening torques specified in the table "Tightening torques for screw connections" must be observed.

Carefully insert the plug-in connections and ensure that they are secure.

11.4.8 Replacing the power block (frame size HX)

Replacing the left power block

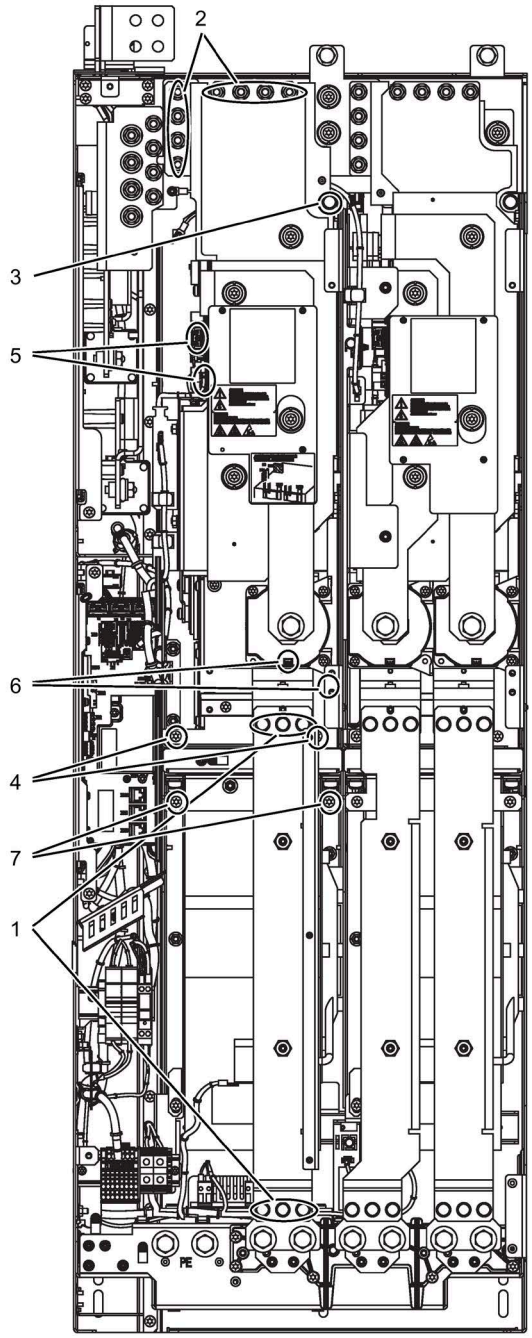

Figure 11-10 Replacing the power block, frame size HX, left power block

Preparatory steps

- Disconnect the cabinet unit from the power supply.
- Allow unimpeded access to the power block.
- Remove the protective cover.

Removal steps

The removal steps are numbered in accordance with the numbers in the diagram.

1. Remove the busbar (6 screws).
2. Unscrew the connection to the DC link (8 nuts).
3. Remove the retaining screw at the top (1 screw).
4. Remove the retaining screws at the bottom (2 screws).
5. Disconnect the plug-in connections for the fiber-optic cables and signal cables (2 plugs).
6. Remove the connection for the current transformer and associated PE connection (1 plug).
7. Unscrew the two retaining screws for the fan and attach the equipment for assembling the power block at this position.

You can now remove the power block.

Note

The power block weighs approx. 64 kg!

NOTICE

Damage to the device if signal cables are damaged when removing

Signal cables can be damaged when the power block is removed. This can cause the device to fail.

- When removing the power block, ensure that you do not damage any signal cables.

Installation steps

To reinstall, perform the above steps in the reverse order.

Note

Specifications for the installation

The tightening torques specified in the table "Tightening torques for screw connections" must be observed.

Carefully insert the plug-in connections and ensure that they are secure.

Replacing the right power block

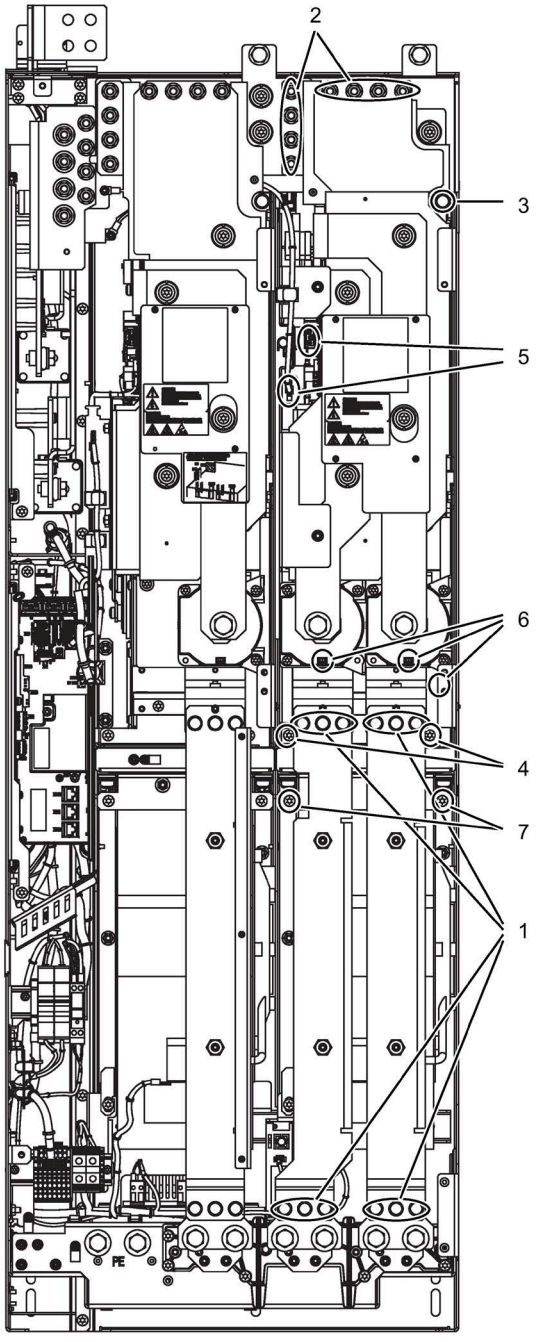

Figure 11-11 Replacing the power block, frame size HX, right power block

Preparatory steps

- Disconnect the cabinet unit from the power supply.
- Allow unimpeded access to the power block.
- Remove the protective cover.

Removal steps

The removal steps are numbered in accordance with the numbers in the diagram.

1. Remove the busbars (12 screws).
2. Unscrew the connection to the DC link (8 nuts).
3. Remove the retaining screw at the top (1 screw).
4. Remove the retaining screws at the bottom (2 screws).
5. Disconnect the plugs for the fiber-optic cables and signal cables (2 plugs).
   The second plug for the fiber-optic cables cannot be disconnected until the power block has been pulled out slightly.
6. Remove the connection for the current transformer and associated PE connection (2 plug).
7. Unscrew the two retaining screws for the fan and attach the tool for de-installing the power block at this position.

You can now remove the power block.

Note

The power block weighs approx. 86 kg!

NOTICE

Damage to the device if signal cables are damaged when removing

Signal cables can be damaged when the power block is removed. This can cause the device to fail.

- When removing the power block, ensure that you do not damage any signal cables.

Installation steps

To reinstall, perform the above steps in the reverse order.

Note

Specifications for the installation

The tightening torques specified in the table "Tightening torques for screw connections" must be observed.

Carefully insert the plug-in connections and ensure that they are secure.

11.4.9 Replacing the power block (frame size JX)

Replacing the power block

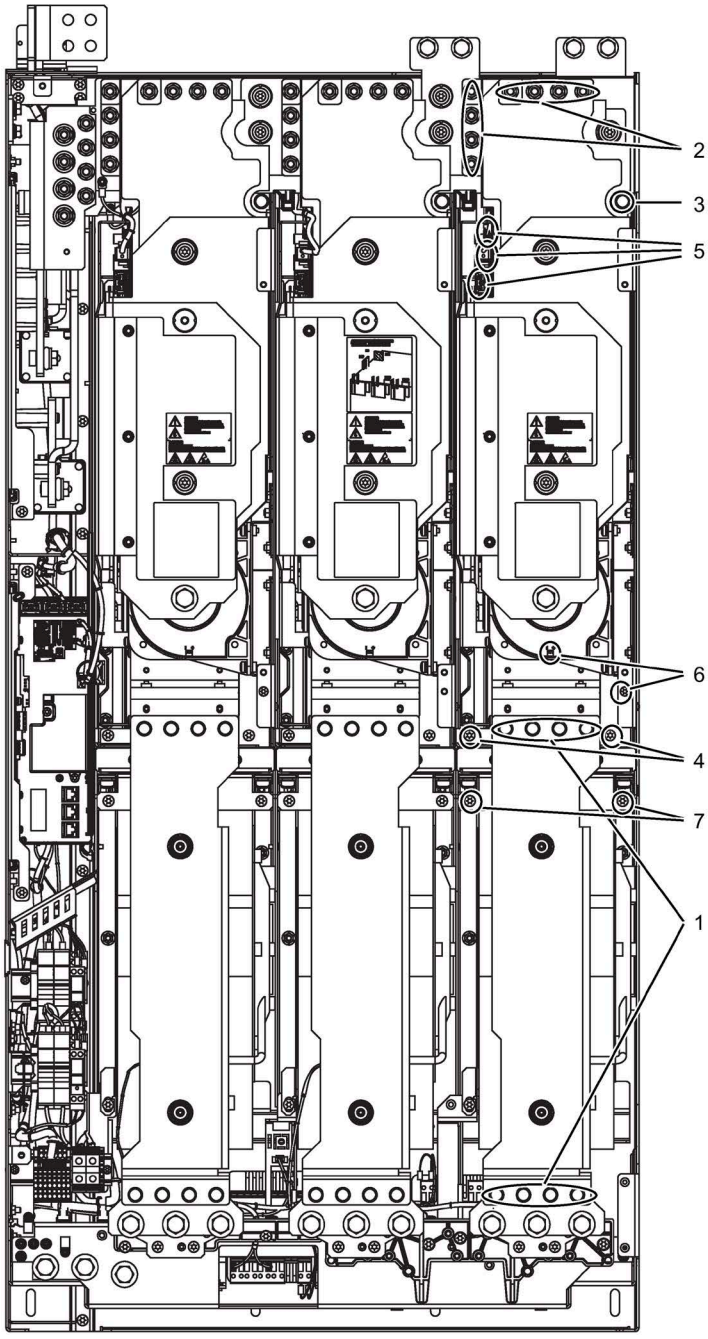

Figure 11-12 Replacing the power block, frame size JX

Preparatory steps

- Disconnect the cabinet unit from the power supply.
- Allow unimpeded access to the power block.
- Remove the protective cover.

Removal steps

The removal steps are numbered in accordance with the numbers in the diagram.

1. Remove the busbar (8 screws).
2. Unscrew the connection to the DC link (8 nuts).
3. Remove the retaining screw at the top (1 screw).
4. Remove the retaining screws at the bottom (2 screws).
5. Disconnect the plug-in connections for the fiber-optic cables and signal cables (3 plugs).
6. Remove the connection for the current transformer and associated PE connection (1 plug).
7. Unscrew the two retaining screws for the fan and attach the equipment for assembling the power block at this position.

You can now remove the power block.

Note

The power block weighs approx. 90 kg!

NOTICE

Damage to the device if signal cables are damaged when removing

Signal cables can be damaged when the power block is removed. This can cause the device to fail.

- When removing the power block, ensure that you do not damage any signal cables.

Installation steps

To reinstall, perform the above steps in the reverse order.

Note

Specifications for the installation

The tightening torques specified in the table "Tightening torques for screw connections" must be observed.

Carefully insert the plug-in connections and ensure that they are secure.

11.4.10 Replacing the fan (frame size FX)

Replacing the fan

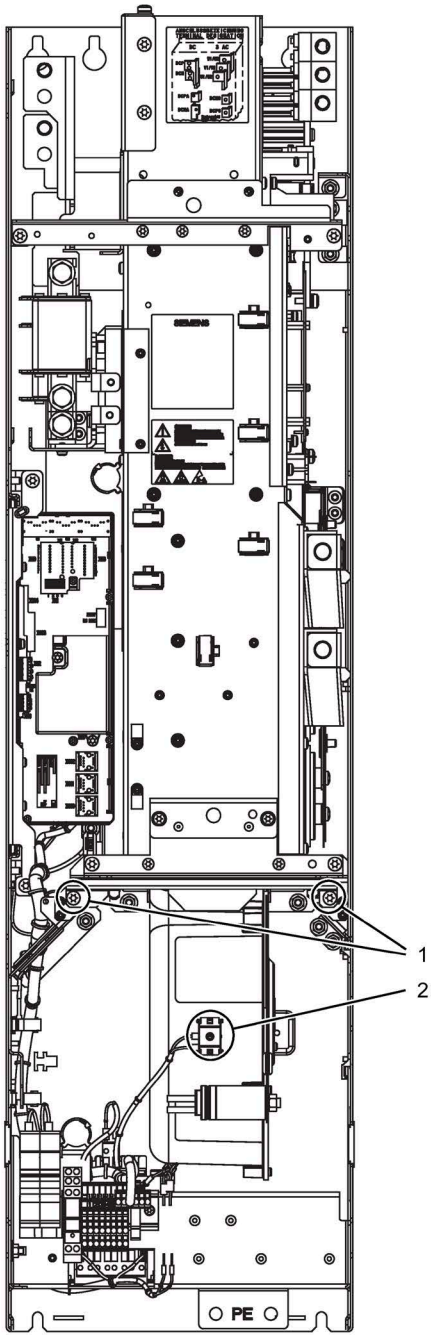

Figure 11-13 Replacing the fan, frame size FX

Description

The average service life of the device fans is 50,000 hours. In practice, however, the service life depends on other variables (e.g. ambient temperature, degree of cabinet protection, etc.) and, therefore, may deviate from this value.

The fans must be replaced in good time to maintain the availability of the cabinet unit.

Preparatory steps

- Disconnect the cabinet unit from the power supply.
- Allow unimpeded access.
- Remove the protective cover.

Removal steps

The removal steps are numbered in accordance with the numbers in the diagram.

1. Remove the retaining screws for the fan (2 screws)
2. Disconnect the supply cables (1 x "L", 1 x "N")

You can now carefully remove the fan.

NOTICE

Damage to the device if signal cables are damaged when removing

Signal cables can be damaged when the fan is removed. This can cause the device to fail.

- When removing the fan, ensure that you do not damage any signal cables.

Installation steps

To reinstall, perform the above steps in the reverse order.

Note

Pay attention to the tightening torques

The tightening torques specified in the table "Tightening torques for screw connections" must be observed.

Note

Reset the operating hours counter

Following fan replacement, the operating hours counter of the fan should be reset using p0251 = 0.

11.4.11 Replacing the fan (frame size GX)

Replacing the fan

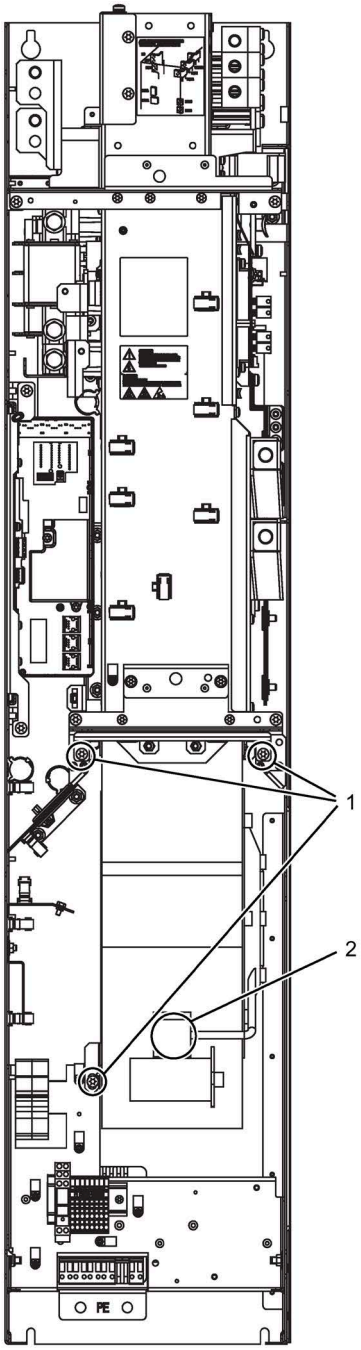

Figure 11-14 Replacing the fan, frame size GX

Description

The average service life of the device fans is 50,000 hours. In practice, however, the service life depends on other variables (e.g. ambient temperature, degree of cabinet protection, etc.) and, therefore, may deviate from this value.

The fans must be replaced in good time to maintain the availability of the cabinet unit.

Preparatory steps

- Disconnect the cabinet unit from the power supply.
- Allow unimpeded access.
- Remove the protective cover.

Removal steps

The removal steps are numbered in accordance with the numbers in the diagram.

1. Remove the retaining screws for the fan (3 screws)
2. Disconnect the supply cables (1 x "L", 1 x "N")

You can now carefully remove the fan.

NOTICE
Damage to the device if signal cables are damaged when removing Signal cables can be damaged when the fan is removed. This can cause the device to fail. • When removing the fan, ensure that you do not damage any signal cables.

Installation steps

To reinstall, perform the above steps in the reverse order.

Note

Pay attention to the tightening torques

The tightening torques specified in the table "Tightening torques for screw connections" must be observed.

Note

Reset the operating hours counter

Following fan replacement, the operating hours counter of the fan should be reset using p0251 = 0.

11.4.12 Replacing the fan (frame size HX)

Replacing the fan, left power block

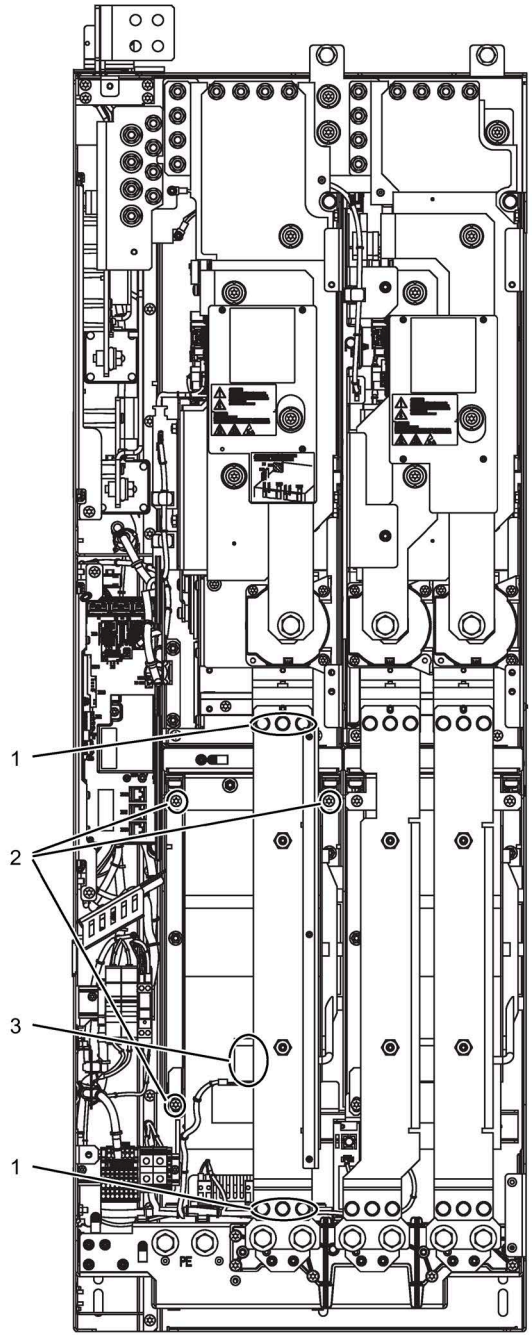

Figure 11-15 Replacing the fan, frame size HX, left power block

Description

The average service life of the device fans is 50,000 hours. In practice, however, the service life depends on other variables (e.g. ambient temperature, degree of cabinet protection, etc.) and, therefore, may deviate from this value.

The fans must be replaced in good time to maintain the availability of the cabinet unit.

Preparatory steps

- Disconnect the cabinet unit from the power supply.
- Allow unimpeded access.
- Remove the protective cover.

Removal steps

The removal steps are numbered in accordance with the numbers in the diagram.

1. Remove the busbar (6 screws).
2. Remove the retaining screws for the fan (3 screws)
3. Disconnect the supply cables (1 x "L", 1 x "N")

You can now carefully remove the fan.

NOTICE
Damage to the device if signal cables are damaged when removing Signal cables can be damaged when the fan is removed. This can cause the device to fail. • When removing the fan, ensure that you do not damage any signal cables.

Installation steps

To reinstall, perform the above steps in the reverse order.

Note

Pay attention to the tightening torques

The tightening torques specified in the table "Tightening torques for screw connections" must be observed.

Note

Reset the operating hours counter

Following fan replacement, the operating hours counter of the fan should be reset using p0251 = 0.

Replacing the fan, right power block

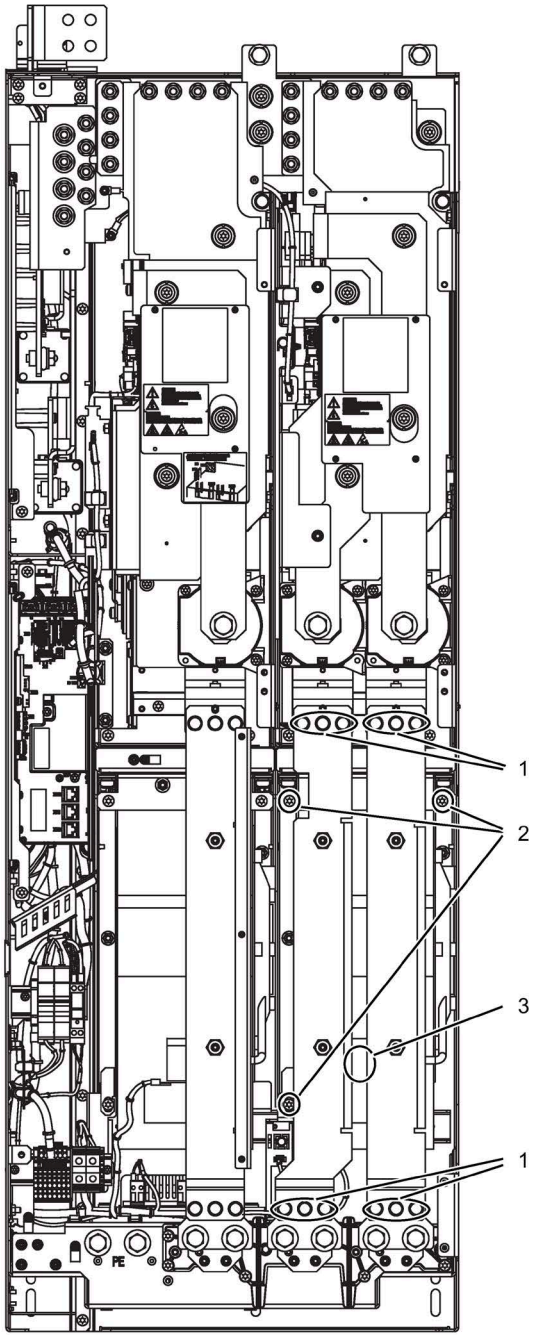

Figure 11-16 Replacing the fan, frame size HX, right power block

Description

The average service life of the device fans is 50,000 hours. In practice, however, the service life depends on other variables (e.g. ambient temperature, degree of cabinet protection, etc.) and, therefore, may deviate from this value.

The fans must be replaced in good time to maintain the availability of the cabinet unit.

Preparatory steps

- Disconnect the cabinet unit from the power supply.
- Allow unimpeded access.
- Remove the protective cover.

Removal steps

The removal steps are numbered in accordance with the numbers in the diagram.

1. Remove the busbars (12 screws).
2. Remove the retaining screws for the fan (3 screws)
3. Disconnect the supply cables (1 x "L", 1 x "N")

You can now carefully remove the fan.

NOTICE
Damage to the device if signal cables are damaged when removing Signal cables can be damaged when the fan is removed. This can cause the device to fail. • When removing the fan, ensure that you do not damage any signal cables.

Installation steps

To reinstall, perform the above steps in the reverse order.

Note

Pay attention to the tightening torques

The tightening torques specified in the table "Tightening torques for screw connections" must be observed.

Note

Reset the operating hours counter

Following fan replacement, the operating hours counter of the fan should be reset using p0251 = 0.

11.4.13 Replacing the fan (frame size JX)

Replacing the fan

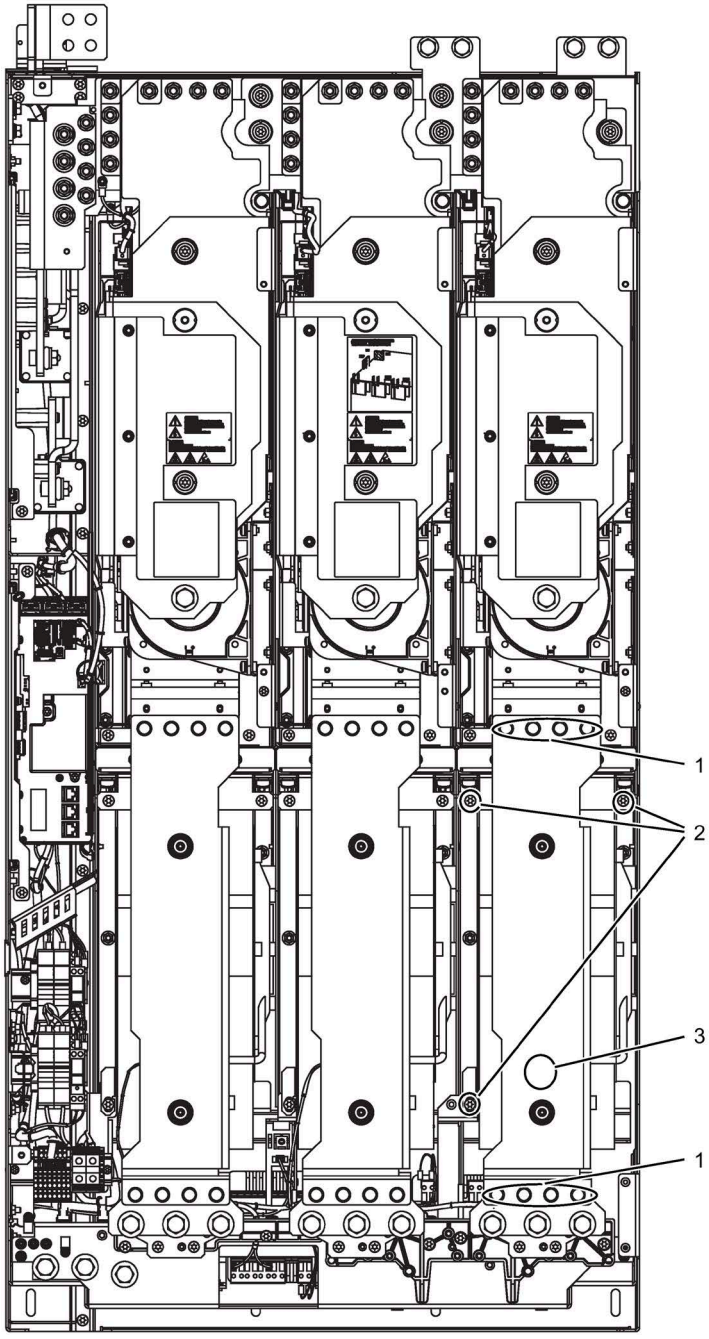

Figure 11-17 Replacing the fan, frame size JX

Description

The average service life of the device fans is 50,000 hours. In practice, however, the service life depends on other variables (e.g. ambient temperature, degree of cabinet protection, etc.) and, therefore, may deviate from this value.

The fans must be replaced in good time to maintain the availability of the cabinet unit.

Preparatory steps

- Disconnect the cabinet unit from the power supply.
- Allow unimpeded access.
- Remove the protective cover.

Removal steps

The removal steps are numbered in accordance with the numbers in the diagram.

1. Remove the busbar (8 screws)
2. Remove the retaining screws for the fan (3 screws)
3. Disconnect the supply cables (1 x "L", 1 x "N")

You can now carefully remove the fan.

NOTICE
Damage to the device if signal cables are damaged when removing Signal cables can be damaged when the fan is removed. This can cause the device to fail. • When removing the fan, ensure that you do not damage any signal cables.

Installation steps

To reinstall, perform the above steps in the reverse order.

Note

Pay attention to the tightening torques

The tightening torques specified in the table "Tightening torques for screw connections" must be observed.

Note

Reset the operating hours counter

Following fan replacement, the operating hours counter of the fan should be reset using p0251 = 0.

11.4.14 Replacing the fan in the Active Interface Module (frame size FI)

Replacing the fan

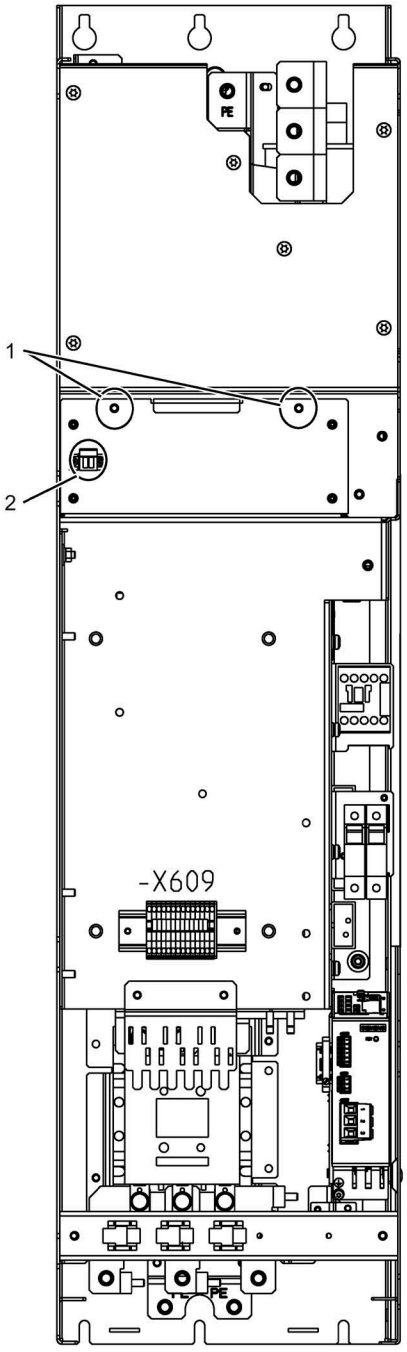

Figure 11-18 Replacing the fan in the Active Interface Module (frame size FI)

Description

The average service life of the device fans is 50,000 hours. In practice, however, the service life depends on other variables (e.g. ambient temperature, degree of cabinet protection, etc.) and, therefore, may deviate from this value.

The fans must be replaced in good time to maintain the availability of the cabinet unit.

Preparatory steps

- Disconnect the cabinet unit from the power supply.
- Allow unimpeded access.
- Remove the protective cover.

Removal steps

The removal steps are numbered in accordance with the numbers in the diagram.

1. Remove the retaining screws for the fan unit (2 screws).
2. Unplug connector –X630.

You can now carefully remove the fan unit.

NOTICE
Damage to the device if signal cables are damaged when removing Signal cables can be damaged when the fan is removed. This can cause the device to fail. • When removing the fan, ensure that you do not damage any signal cables.

Installation steps

To reinstall, perform the above steps in the reverse order.

Note

Pay attention to the tightening torques

The tightening torques specified in the table "Tightening torques for screw connections" must always be carefully observed.

11.4.15 Replacing the fan in the Active Interface Module (frame size GI)

Replacing the fan

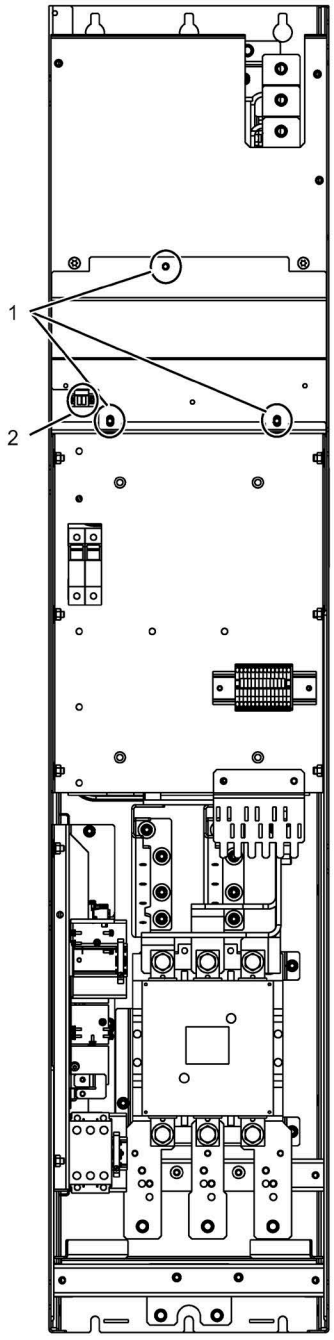

Figure 11-19 Replacing the fan in the Active Interface Module (frame size GI)

Description

The average service life of the device fans is 50,000 hours. In practice, however, the service life depends on other variables (e.g. ambient temperature, degree of cabinet protection, etc.) and, therefore, may deviate from this value.

The fans must be replaced in good time to maintain the availability of the cabinet unit.

Preparatory steps

- Disconnect the cabinet unit from the power supply.
- Allow unimpeded access.
- Remove the protective cover.

Removal steps

The removal steps are numbered in accordance with the numbers in the diagram.

1. Remove the retaining screws for the fan unit (3 screws)
2. Unplug connector –X630.

You can now carefully remove the fan unit.

NOTICE
Damage to the device if signal cables are damaged when removing Signal cables can be damaged when the fan is removed. This can cause the device to fail. • When removing the fan, ensure that you do not damage any signal cables.

Installation steps

To reinstall, perform the above steps in the reverse order.

Note

Pay attention to the tightening torques

The tightening torques specified in the table "Tightening torques for screw connections" must always be carefully observed.

11.4.16 Replacing the fan in the Active Interface Module (frame size HI)

Replacing the fan

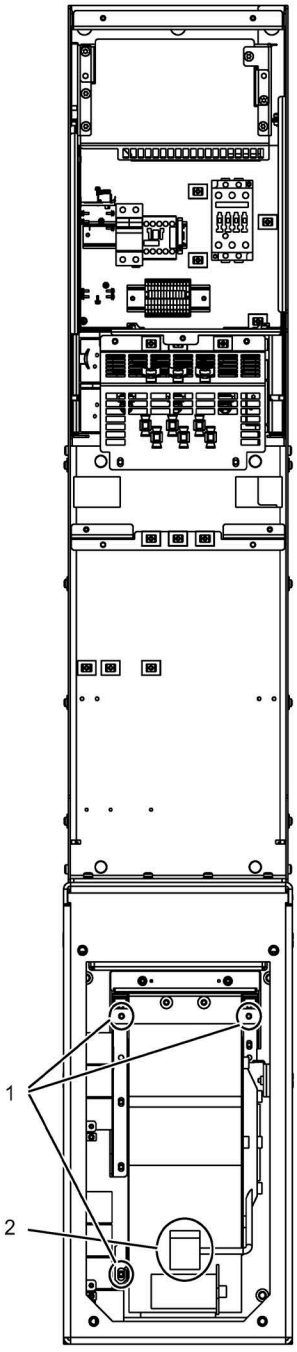

Figure 11-20 Replacing the fan in the Active Interface Module (frame size HI)

Description

The average service life of the device fans is 50,000 hours. In practice, however, the service life depends on other variables (e.g. ambient temperature, degree of cabinet protection, etc.) and, therefore, may deviate from this value.

The fans must be replaced in good time to maintain the availability of the cabinet unit.

Preparatory steps

- Disconnect the cabinet unit from the power supply.
- Allow unimpeded access.
- Remove the protective cover.

Removal steps

The removal steps are numbered in accordance with the numbers in the diagram.

1. Remove the retaining screws for the fan (3 screws)
2. Disconnect the supply cables (1 x "L", 1 x "N")

You can now carefully remove the fan.

NOTICE
Damage to the device if signal cables are damaged when removing Signal cables can be damaged when the fan is removed. This can cause the device to fail. • When removing the fan, ensure that you do not damage any signal cables.

Installation steps

To reinstall, perform the above steps in the reverse order.

Note

Pay attention to the tightening torques

The tightening torques specified in the table "Tightening torques for screw connections" must always be carefully observed.

11.4.17 Replacing the fan in the Active Interface Module (frame size JI)

Replacing the fan

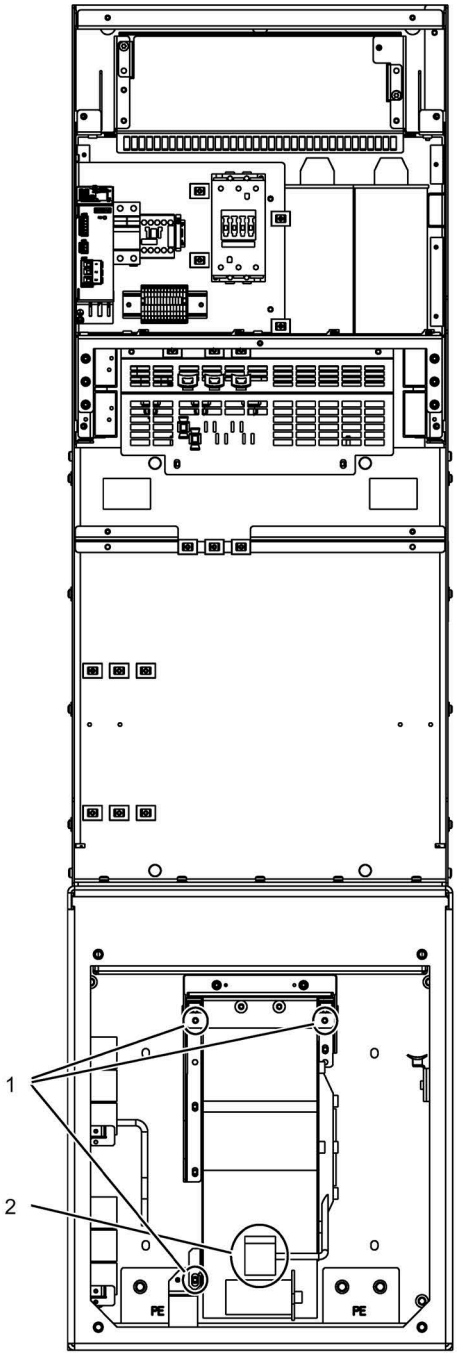

Figure 11-21 Replacing the fan in the Active Interface Module (frame size JI)

Description

The average service life of the device fans is 50,000 hours. In practice, however, the service life depends on other variables (e.g. ambient temperature, degree of cabinet protection, etc.) and, therefore, may deviate from this value.

The fans must be replaced in good time to maintain the availability of the cabinet unit.

Preparatory steps

- Disconnect the cabinet unit from the power supply.
- Allow unimpeded access.
- Remove the protective cover.

Removal steps

The removal steps are numbered in accordance with the numbers in the diagram.

1. Remove the retaining screws for the fan (3 screws)
2. Disconnect the supply cables (1 x "L", 1 x "N")

You can now carefully remove the fan.

NOTICE
Damage to the device if signal cables are damaged when removing Signal cables can be damaged when the fan is removed. This can cause the device to fail. • When removing the fan, ensure that you do not damage any signal cables.

Installation steps

To reinstall, perform the above steps in the reverse order.

Note

Pay attention to the tightening torques

The tightening torques specified in the table "Tightening torques for screw connections" must always be carefully observed.

11.4.18 Replacing the DC fuses in the Active Line Module, Motor Module, frame size HX

Replacing the DC fuses

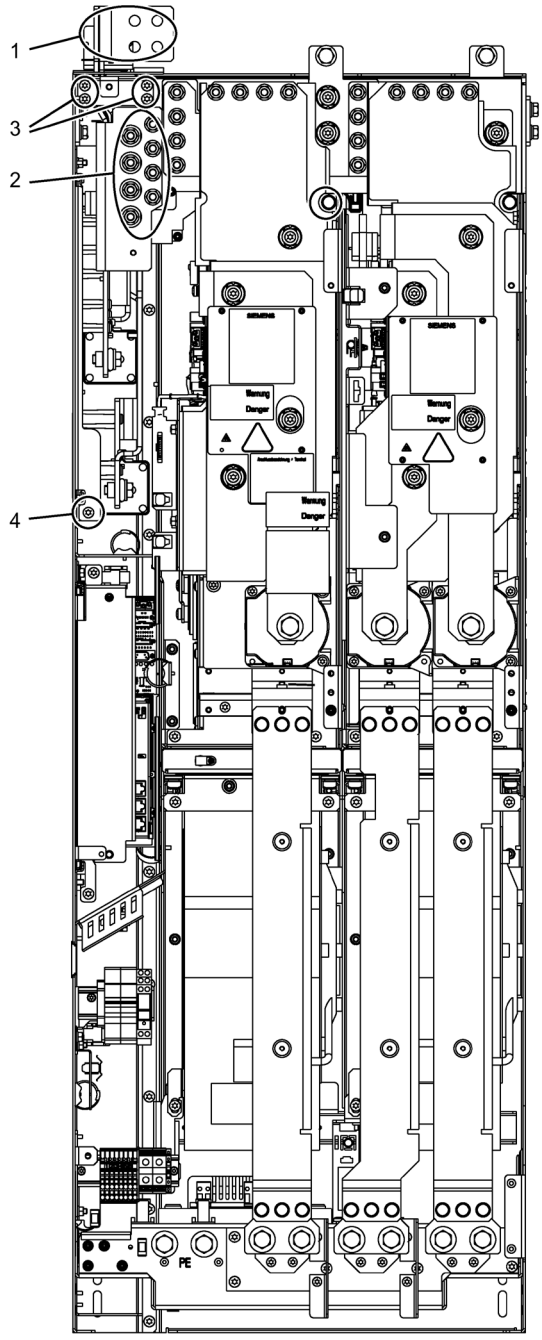

Figure 11-22 Replacing the DC fuses, Active Line Module, Motor Module and frame size HX

Description

The DC fuses are installed in a fuse insert. To replace the fuses, the fuse insert must be removed.

NOTICE
Device failure after a DC fuse ruptures The neighboring DC fuses may also become damaged if a DC fuse ruptures. Failure to replace all fuses at the same time can cause the device to fail. • After a DC fuse ruptures, always replace all DC fuses at the same time. Always use fuses of the same type.

Preparatory steps

- Disconnect the drive line-up from the power supply
- Allow unimpeded access.
- Remove the protective cover.

Removal steps

The removal steps are numbered in accordance with the numbers in the diagram.

1. Release the DC connections at DCP and DCN (4 screws each)
2. Remove nuts (8 screws)
3. Remove the retaining screws for the connection plate of the housing (4 screws) and remove the connection plate.
4. Remove the retaining screw for the fuse insert (1 screw)

You can now remove the fuse insert.

NOTICE
Damage to the device if signal cables or plastic parts are damaged when removing Signal cables or plastic parts can be damaged when the fuse insert is removed. This can cause the device to fail. • When removing the fuse insert, ensure that you do not damage any signal cables or plastic parts.

You can then replace the DC fuses.

Installation steps

To reinstall, perform the above steps in the reverse order.

Note

Pay attention to the tightening torques

The tightening torques specified in the table "Tightening torques for screw connections" must be observed.

11.4.19 Replacing the DC fuses in the Active Line Module, Motor Module, frame size JX

Replacing the DC fuses

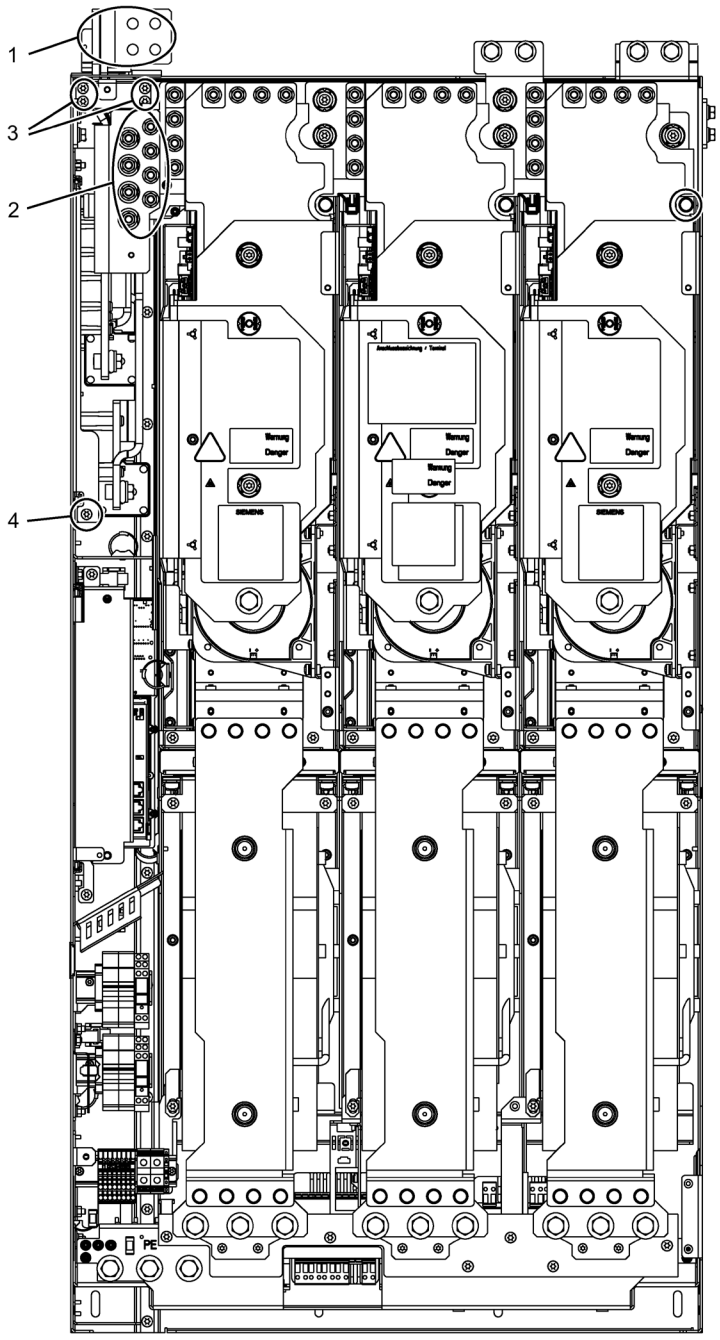

Figure 11-23 Replacing the DC fuses, Active Line Module, Motor Module and frame size JX

Description

The DC fuses are installed in a fuse insert. To replace the fuses, the fuse insert must be removed.

NOTICE
Device failure after a DC fuse ruptures The neighboring DC fuses may also become damaged if a DC fuse ruptures. Failure to replace all fuses at the same time can cause the device to fail. • After a DC fuse ruptures, always replace all DC fuses at the same time. Always use fuses of the same type.

Preparatory steps

- Disconnect the drive line-up from the power supply
- Allow unimpeded access.
- Remove the protective cover.

Removal steps

The removal steps are numbered in accordance with the numbers in the diagram.

1. Release the DC connections at DCP and DCN (4 screws each)
2. Remove nuts (8 screws)
3. Remove the retaining screws for the connection plate of the housing (4 screws) and remove the connection plate.
4. Remove the retaining screw for the fuse insert (1 screw)

You can now remove the fuse insert.

NOTICE
Damage to the device if signal cables or plastic parts are damaged when removing Signal cables or plastic parts can be damaged when the fuse insert is removed. This can cause the device to fail. • When removing the fuse insert, ensure that you do not damage any signal cables or plastic parts.

You can then replace the DC fuses.

Installation steps

To reinstall, perform the above steps in the reverse order.

Note

Pay attention to the tightening torques

The tightening torques specified in the table "Tightening torques for screw connections" must be observed.

11.4.20 Replacing cylindrical fuses

The following fuses are cylindrical fuses:

- Fan fuses (-R2 -F101/F102, -G1 -F10/F11, -T1 -F10/F11)
- Fuses for auxiliary power supply -F11, -F12
- Fuse for the internal 230 V AC supply (-F21)

Figure 11-24 Fuse holder

Article numbers for replacing fuses that have blown can be found in the spare parts list.

Note

Removing fault causes

Make sure that the cause of the fault is found before the fuse is replaced.

11.4.21 Replacing the LV HRC fuses

Description

NH fuses (low-voltage high-breaking-capacity fuses), also called knife fuses, are used, for example, in the on/off switches of the power supplies.

Figure 11-25 NH fuse

Preparatory steps

- Keep the safety equipment close at hand: NH fuse puller with forearm protection for NH fuse-links
- Observe the national safety regulations.

Figure 11-26 NH fuse puller with forearm protection for NH fuses

Note

If required, the LV HRC fuse grip can be ordered from Siemens using article number 3NX1.

Removal steps

The NH fuse is removed in the following steps:

1. Open the main switch.
2. Remove the front shock hazard protection cover of the cabinet in front of the fuses.

WARNING

Electric shock as the cover above the line supply connections has been removed

When the lower cover (over the line connections) is removed, line voltage is present even when the main switch is switched off. Contact with the connections can result in death or serious injury.

- Do not remove the cover (shock protection) over the line connections.

3. Locate the LV HRC fuse puller with forearm protection for LV HRC fuse-links over the fuse.
4. Withdraw the defective fuse.

NOTICE

Device failure after a LV HRC fuse trips

The neighboring LV HRC fuses may also become damaged if a LV HRC fuse ruptures. Failure to replace all fuses at the same time can cause the device to fail.

- After a LV HRC fuse ruptures, always replace all LV HRC fuses at the same time. Always use fuses of the same type.

Installation steps

The NH fuse is installed in the following steps:

1. Insert the new fuse into the LV HRC fuse puller.
2. Insert the fuse into the fuse holder.
3. Press the release button on the LV HRC fuse puller to release the grip from the new fuse.
4. Attach the front shock hazard protection cover.

The power switch can then be closed.

WARNING

Electric shock when using unsuitable fuses

If unsuitable fuses are used, an electric shock can cause severe injury or death.

- Use only fuses specified in the spare parts list.

11.4.22 Replacing the cabinet operator panel

1. Switch the unit into a no-voltage condition.
2. Open the cabinet.
3. Disconnect the power supply and communications line on the operator panel.
4. Release the fastenings on the operator panel.
5. Remove the operator panel.
6. Install the new operator panel.
7. Carry out any other work by reversing the sequence.

11.4.23 Replacing the Backup Battery for the Cabinet Operator Panel

Table 11- 2 Technical specifications of the backup battery

Type	CR2032 3 V lithium battery
Manufacturer	Maxell, Sony, Panasonic
Nominal capacity	220 mAh
Self-discharge at 20 °C	1 %/year
Service life (in backup mode)	> 1 year at 70 °C; >1.5 years at 20 °C
Service life (in operation)	> 2 years

Replacement

1. Switch the unit into a no-voltage condition.
2. Open the cabinet.
3. Disconnect the 24 V DC power supply and communications line on the operator panel.
4. Open the cover of the battery compartment.
5. Remove the old battery.
6. Insert the new battery.
7. Close the cover of the battery compartment.
8. Reconnect the 24 V DC power supply and communications line.
9. Close the cabinet.

Note

Time for replacing the battery

The battery must be replaced within one minute to ensure that no AOP settings are lost.

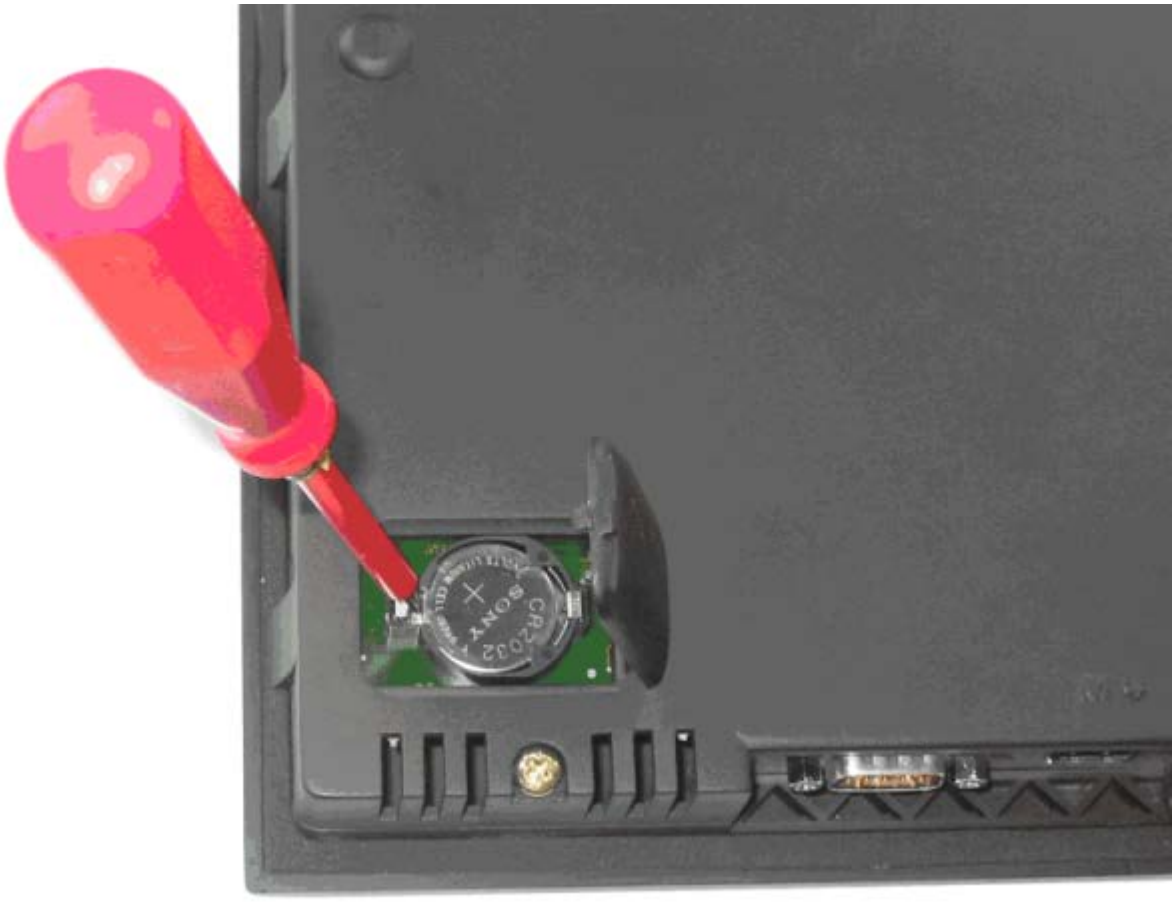

Figure 11-27 Replacing the backup battery for the cabinet operator panel

Note

Battery disposal

The battery must be disposed of in accordance with the applicable country-specific guidelines and regulations.

11.5 Forming the DC link capacitors

Description

If the device is kept in storage for more than two years, the DC-link capacitors have to be re-formed.

If the cabinet is commissioned within two years of its date of manufacture, the DC-link capacitors do not need to be re-formed. The date of manufacture is indicated in the serial number on the type plate (see "Device Overview").

NOTICE
Material damage caused by omitted forming If no forming is performed on a device after that has been stored for more than two years, operation with load can cause material damage on the device. • Form a device that has been in storage for more than two years.

Note

Storage period

It is important that the storage period is calculated from the date of manufacture and not from the date that the equipment was shipped.

Procedure

The DC-link capacitors are re-formed by applying the rated voltage without load for at least 30 minutes at room temperature.

- Operation via PROFIBUS:
  - Set bit 3 of control word 1 (operation enable) permanently to "0".
  - Switch on the converter by means of an ON signal (bit 0 of the control word); all the other bits must be set in such a way that the converter can be operated.
  - Once the delay time has elapsed, switch off the converter and restore the original PROFIBUS setting.
- Operation via terminal block:
  - Set p0852 to "0" (factory setting is "1").
  - Switch on the converter (via digital input 0 on the customer terminal block).
  - Once the delay time has elapsed, switch off the converter and restore the original setting for p0852.

Note

Forming via AOP30

Reforming cannot be carried out in LOCAL mode via the AOP30.

11.6 Messages after replacing DRIVE-CLiQ components

After DRIVE-CLiQ components are replaced (Control Interface Module, TM31, SMCxx) when service is required, generally no message is output after power-up, since an identical component is identified and accepted as component when the system boots.

The reason for this is that an identical component is detected and accepted as spare part when running-up. If, unexpectedly, a fault message of the "topology fault" category is displayed, then when replacing a component, one of the following faults/errors should have occurred:

- A Control Interface Module with different firmware data was installed.
- When connecting-up DRIVE-CLiQ cables, connections were interchanged.

Automatic firmware update

A firmware update for the replaced DRIVE-CLiQ component may run automatically after switching on the electronics.

- The following LEDs will flash slowly to indicate that an automatic firmware update is in progress: the "RDY" LED on the Control Unit (orange, 0.5 Hz) and an LED on the relevant DRIVE-CLiQ component (green/red, 0.5 Hz).

  Note

  Do not shut down the converter

  Do not shut down the converter during this process as the firmware update will otherwise have to be started again.

- Once the automatic firmware update is complete, the "RDY" LED on the Control Unit will flash quickly (orange, 2 Hz) along with an LED on the relevant DRIVE-CLiQ component (green/red, 2 Hz).
- To complete the automatic firmware update process, a POWER ON is required (switch the device off and back on again).

11.7 Upgrading the cabinet unit firmware

Upgrading the enclosed device firmware (by installing a new memory card with a new firmware version, for example) may also necessitate an upgrade of the firmware of the DRIVE-CLiQ components contained in the enclosed drive.

If the system detects that the firmware in the DRIVE-CLiQ components needs to be upgraded, it will do this independently as part of the automatic firmware update.

Automatic firmware update sequence

1. During an automatic firmware update, the "RDY" LED on the Control Unit flashes slowly (orange, 0.5 Hz).
2. The firmware update is performed on each DRIVE-CLiQ component as needed; during the update process, an LED for the respective component flashes slowly (green/red, 0.5 Hz).
3. Once the firmware update for a specific DRIVE-CLiQ component is complete, the LED for that component will flash quickly (green/red, 2 Hz).
4. Once the firmware update for all components is complete, the LED for the Control Unit will flash quickly (orange, 2 Hz).
5. To complete the automatic firmware update process, a POWER ON is required (switch the device off and back on again).

Note

The power supply to the components should not be interrupted during the update, because otherwise the firmware update must be restarted.

11.8 Loading the new operator panel firmware from the PC.

Description

Firmware might need to be loaded to the AOP if the AOP functionality needs to be upgraded.

If, once the drive has being switched on, the memory card is found to contain a newer version of the firmware, a message will appear on the AOP30 prompting you to load the new firmware. You should click "YES" in response to this prompt.
The firmware will then be loaded automatically on the operator panel and the following dialog screen will appear.

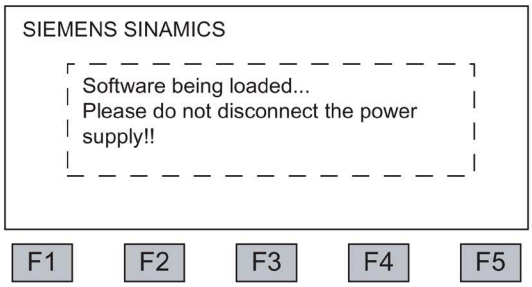

Figure 11-28 Dialog screen: loading firmware

If the firmware cannot be loaded successfully, it can be loaded using the following manual method.

The load program LOAD_AOP30 and the firmware file can be found on the customer DVD.

Loading the firmware

1. Establish the RS232 connection from the PC to the AOP30.
2. Provide the supply voltage (24 V DC).
3. Start the LOAD_AOP30 program on the PC.
4. Choose the PC interface (COM1, COM2).
5. Choose and open the firmware (AOP30.H86).
6. Follow the instructions in the status window of the program and connect the power supply for the AOP30 while pressing the red key (O).
7. The load procedure is started automatically.
8. Switch the power on (switch the power supply off and then back on).

Technical specifications 12

12.1 Chapter content

This chapter provides information on the following:

- General and specific technical specifications for the devices.
- Information on restrictions that apply when the devices are used in unfavorable ambient conditions (derating)

12.2 General technical specifications

Table 12- 1 General technical data

Electrical data			
Line system configurations	Grounded TN/TT systems or ungrounded IT systems (a grounded phase conductor is not permissible in 690 V line supplies)		
Line frequency	47 ... 63 Hz		
Output frequency	0 ... 300 Hz		
Power factor	Variable via reactive current (factory setting: cos φ = 1)		
Switching at input	1x every 3 minutes		
Overvoltage category	III per EN 61800-5-1		
Electromagnetic compatibility (EMC)			
Emitted interference • Standard • With line filter (option L00)	• Category C3 (second environment) according to EN 61800-3 • Category C2 (first *) and second environments) according to EN 61800-3 *) When used in the first environment, an appropriately trained and authorized technical person must set up the drive and commission it. NOTE: An appropriately trained and authorized technician is person or organization with the required experience for setting up and/or for commissioning the drive systems, including the associated EMC aspects.		
Immunity	Use in the first and second environment according to EN 61800-3		
Mechanical data			
Degree of protection	IP20 (higher degrees of protection up to IP54 optional)		
Class of protection	I per EN 61800-5-1		
Cooling method	Forced air cooling AF according to EN 60146		
Sound pressure level L_{pA} (1 m)	≤ 78 dB(A) at 50 Hz line frequency ≤ 80 dB(A) at 60 Hz line frequency		
Touch protection	EN 50274 and DGUV regulation 3 when used for the intended purpose		
Cabinet system	Rittal TS 8, doors with double-barb lock, three-section base plates for cable entry		
Paint finish	RAL 7035 (indoor requirements)		
Compliance with standards			
Standards	EN 60146-1, EN 61800-2, EN 61800-3, EN 61800-5-1, EN 60204-1, EN 60529 1)		
CE mark	In accordance with EMC Directive No. 2014/30/EU and Low-Voltage Directive No. 2014/35/EU and Machinery Directive No. 2006/42/EC		
Ambient conditions	**Storage**	**Transport**	**Operation**
Ambient temperature	-25 ... +55 °C	-25 ... +70 °C from *–40* °C for 24 hours	*0* ... +40 °C up to 50 °C with derating
Humidity range 1) (non-condensing) corresponds to class	*5 ... 95 %* 1K4 acc. to EN 60721-3-1:1997	5 ... 95% at 40 °C 2K3 acc. to EN 60721-3-2:1997	5 ... *95 %* 3K3 acc. to EN 60721-3-3:2002
Environmental class/harmful chemical substances 1)	1C2 acc. to EN 60721-3-1:1997	2C2 acc. to EN 60721-3-2:1997	3C2 acc. to EN 60721-3-3:2002
Organic/biological influences 1)	1B1 acc. to EN 60721-3-1:1997	2B1 acc. to EN 60721-3-2:1997	3B1 acc. to EN 60721-3-3:2002
Mechanically active substances 2)	1S1 acc. to EN 60721-3-1:1997	2S1 acc. to EN 60721-3-2:1997	3S1 acc. to EN 60721-3-3:2002
Degree of pollution	2 according to EN 61800-5-1		
Installation altitude	Up to 2000 m above sea level without derating, > 2000 m above sea level with derating (see "Derating data")		

Mechanical strength	Storage	Transport	Operation
Vibrational load [1)] - Displacement - Acceleration corresponds to class	1.5 mm at *5* ... 9 Hz 5 m/s² at > 9 ... 200 Hz 1M2 acc. to EN 60721-3-1:1997	*3.1 mm* at *5* ... 9 Hz 10 m/s² at > 9 ... 200 Hz 2M2 acc. to EN 60721-3-2:1997	0.075 mm at 10 ... 58 Hz 10 m/s² at >58 ... 200 Hz -
Shock load [1)] - Acceleration corresponds to class	40 m/s² at 22 ms 1M2 acc. to EN 60721-3-1:1997	100 m/s² at 11 ms 2M2 acc. to EN 60721-3-2:1997	100 m/s² at 11 ms 3M4 acc. to EN 60721-3-3:2002
Functional safety			
Safety Integrity Level (SIL)	SIL 2 according to IEC 61508 and IEC 61800-5-2		
Performance Level and Category	PL d and Category 3 according to EN ISO 13849-1		

Deviations from the defined classes are shown in *italics*.

[1)] The EN standards specified are the European editions of the international IEC standards with the same designations.

12.2.1 Derating data

12.2.1.1 Current derating as a function of the ambient temperature

Permissible output current as a function of the ambient temperature

The cabinet devices and the associated system components are rated for an ambient temperature of 40 °C and installation altitudes up to 2000 m above sea level. The output current must be reduced if the cabinet devices are operated at ambient temperatures above 40 °C. Ambient temperatures above 50 °C are not permissible. The following tables specify the permissible output current as a function of the ambient temperature for the different degrees of protection.

Table 12- 2 Current derating factors as a function of the ambient temperature (inlet air temperature at the air inlet of the cabinet unit) and installation altitude for cabinet units with degree of protection IP20/IP21/IP23/IP43

Installation altitude above sea level in m	Current derating factor at an ambient temperature (air intake temperature) of						
	20 °C	**25 °C**	**30 °C**	**35 °C**	**40 °C**	**45 °C**	**50 °C**
0 ... 2000	100 %	100 %	100 %	100 %	100 %	93.3 %	86.7 %

Table 12- 3 Current derating factors as a function of the hambient temperature (inlet air temperature at the air inlet of the cabinet unit) and installation altitude for cabinet units with degree of protection IP54

Installation altitude above sea level in m	Current derating factor at an ambient temperature (air intake temperature) of						
	20 °C	**25 °C**	**30 °C**	**35 °C**	**40 °C**	**45 °C**	**50 °C**
0 ... 2000	100 %	100 %	100 %	100 %	93.3 %	86.7 %	80.0 %

12.2.1.2 Installation altitudes between 2000 m and 5000 m above sea level

If the SINAMICS S150 cabinet units are operated at an installation altitude >2000 m above sea level, it must be taken into account that the air pressure and, consequently, the air density decreases. The lower air density also reduces the cooling efficiency and the insulation capacity of the air.

Installation altitudes between 2000 m and 5000 m can be achieved by applying the following measures.

Note

These measures apply only for SINAMICS S150 cabinet units in voltage level 3-phase 380 to 480 VAC.
Measures for cabinet units in voltage level 3-phase 500 to 690 VAC are available on request

Reduce the ambient temperature and the output current

Due to the reduced cooling efficiency, it is necessary, on the one hand, to reduce the ambient temperature and, on the other, to lower heat loss in the cabinet unit by reducing the output current, whereby ambient temperatures lower than 40° C may be offset to compensate, and are taken into account in the tables. The following tables specify the permissible output currents as a function of installation altitude and ambient temperature for the different degrees of protection. The specified values already include a permitted correction in respect of installation altitude and ambient temperatures less than 40° C (incoming air temperature at the inlet to the cabinet unit). The values apply under the precondition that the cabinet layout ensures a cooling air flow though the units as stated in the technical data.

Table 12- 4 Current derating as a function of ambient temperature (inlet air temperature at the air inlet of the cabinet unit) and installation altitude for cabinet units with degree of protection IP20/IP21/IP23/IP43

Installation altitude above sea level in m	**Current derating factor** at an ambient temperature (air inlet temperature) of						
	20° C	**25° C**	**30° C**	**35° C**	**40° C**	**45° C**	**50° C**
0 ... 2000	100 %	100 %	100 %	100 %	100 %	93,3 %	86,7 %
... 2500	100 %	100 %	100 %	100 %	96,3 %		
... 3000	100 %	100 %	100 %	98,7 %			
... 3500	100 %	100 %	100 %				
... 4000	100 %	100 %	96,3 %				
... 4500	100 %	97,5 %					
... 5000	98,2 %						

Table 12- 5 Current derating as a function of the ambient temperature (inlet air temperature at the air inlet of the cabinet unit) and installation altitude for cabinet units with degree of protection IP54

Installation altitude above sea level in m	**Current derating factor** at an ambient temperature (air inlet temperature) of						
	20° C	**25° C**	**30° C**	**35° C**	**40° C**	**45° C**	**50° C**
0 ... 2000	100 %	100 %	100 %	100 %	93,3 %	86,7 %	80,0 %
... 2500	100 %	100 %	100 %	96,3 %	89,8 %		
... 3000	100 %	100 %	98,7 %	92,5 %			
... 3500	100 %	100 %	94,7 %				
... 4000	100 %	96,3 %	90,7 %				
... 4500	97,5 %	92,1 %					
... 5000	93,0 %						

Using an isolating transformer to reduce transient overvoltages according to IEC 61800-5-1

This drops overvoltage category III to overvoltage category II, thereby reducing the requirements for insulation capacity of the air. Additional voltage derating (reduction of the input voltage) is not required if the following framework conditions are observed:

- The isolating transformer must be fed from a low-voltage or medium-voltage network and must not be power directly from a high-voltage supply system.
- The isolating transformer may be connected to one or more cabinet units.
- The cables between the isolating transformer and the cabinet unit(s) must be routed in such a manner as to rule out direct lightening strike, i.e. overland lines must not be used.
- The following types of system are permissible:
  - TN systems with grounded star point (no grounded outer conductor, no IT systems).

12.2.1.3 Current derating as a function of the pulse frequency

When the pulse frequency is increased, the derating factor of the output current must be taken into account. This derating factor must be applied to the currents specified in the technical data for the cabinet units.

Table 12- 6 Derating factor of the output current as a function of the pulse frequency for devices with a rated pulse frequency of 2 kHz

Article no.	Type rating	Output current at 2 kHz	Derating factor at the pulse frequency				
6SL3710-...	[kW]	[A]	2.5 kHz	4 kHz	5 kHz	7.5 kHz	8 kHz
Supply voltage 3-phase 380 VAC ... 480 VAC							
7LE32-1AA3	110	210	95%	82%	74%	54%	50%
7LE32-6AA3	132	260	95%	83%	74%	54%	50%
7LE33-1AA3	160	310	97%	88%	78%	54%	50%
7LE33-8AA3	200	380	96%	87%	77%	54%	50%
7LE35-0AA3	250	490	94%	78%	71%	53%	50%

Table 12- 7 Derating factor of the output current as a function of the pulse frequency for devices with a rated pulse frequency of 1.25 kHz

Article no.	Type rating	Output current at 1.25 kHz	Derating factor at the pulse frequency					
6SL3710-...	[kW]	[A]	2 kHz	2.5 kHz	4 kHz	5 kHz	7.5 kHz	8 kHz
Supply voltage 3-phase 380 VAC ... 480 VAC								
7LE36-1AA3	315	605	83%	72%	64%	60%	40%	36 %
7LE37-5AA3	400	745	83%	72%	64%	60%	40%	36 %
7LE38-4AA3	450	840	87%	79%	64%	55%	40%	37%
7LE41-0AA3	560	985	92%	87%	70%	60%	50%	47 %
7LE41-2AA3	710	1260	92%	87%	70%	60%	50%	47 %
7LE41-4AA3	800	1405	97%	95%	74%	60%	50%	47 %
Supply voltage 3 AC 500 ... 690 V								
7LG28-5AA3	75	85	93%	89%	71%	60%	40%	--
7LG31-0AA3	90	100	92%	88%	71%	60%	40%	--
7LG31-2AA3	110	120	92%	88%	71%	60%	40%	--
7LG31-5AA3	132	150	90%	84%	66%	55%	35%	--
7LG31-8AA3	160	175	92%	87%	70%	60%	40%	--
7LG32-2AA3	200	215	92%	87%	70%	60%	40%	--
7LG32-6AA3	250	260	92%	88%	71%	60%	40%	--
7LG33-3AA3	315	330	89%	82%	65%	55%	40%	--
7LG34-1AA3	400	410	89%	82%	65%	55%	35%	--
7LG34-7AA3	450	465	92%	87%	67%	55%	35%	--
7LG35-8AA3	560	575	91%	85%	64%	50%	35%	--
7LG37-4AA3	710	735	87%	79%	64%	55%	35%	--
7LG38-1AA3	800	810	97%	95%	71%	55%	35%	--
7LG38-8AA3	900	910	92%	87%	67%	55%	33%	--
7LG41-0AA3	1000	1025	91%	86%	64%	50%	30%	--
7LG41-3AA3	1200	1270	87%	79%	55%	40%	25%	--

Note

Derating factors for pulse frequencies in the range between fixed values

For pulse frequencies in the range between the specified fixed values, the relevant derating factors can be determined by linear interpolation.

12.2.2 Overload capability

The converter has an overload reserve (e.g. to handle breakaway torques).

In drives with overload requirements, the appropriate base load current must, therefore, be used as a basis for the required load.

The overloads apply under the precondition that the converter is operated as a maximum at its base-load current before and after the overload (a duty cycle duration of 300 s is used as a basis here).

Another precondition is that the frequency converter is operated at its factory-set pulse frequency at output frequencies >10 Hz.

For additional information on overload capability, see the Low Voltage configuration manual.

Low overload

The base-load current for low overload (I_L) is based on a load duty cycle of 110% for 60 s or 150% for 10 s.

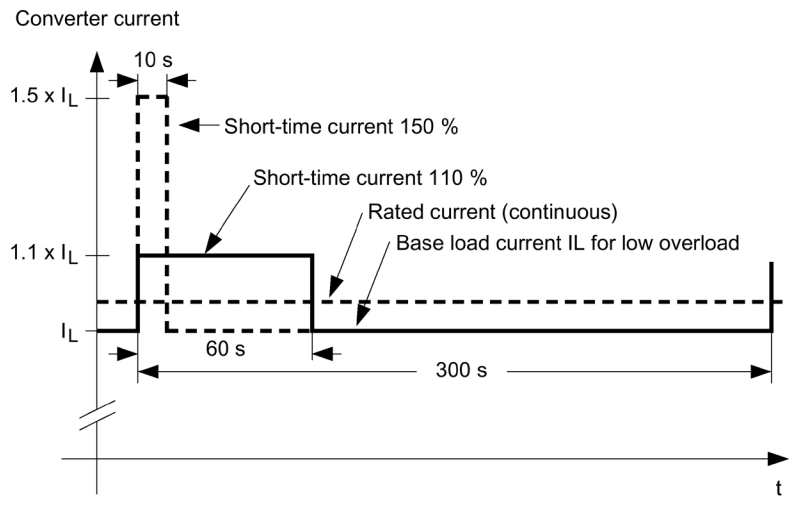

Figure 12-1 Low overload

High overload

The base-load current for a high overload I_H is based on a duty cycle of 150% for 60 s or 160% for 10 s.

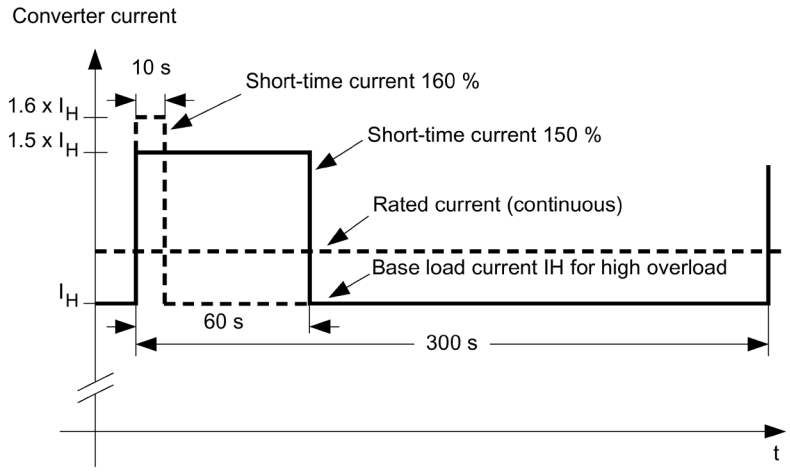

Figure 12-2 High overload

12.3 Technical specifications

Note

Notes on the technical data

Current, voltage and power figures in these tables are rated values.

The cables to the device are protected by fuses of operating class gG.

The cable cross-sections have been determined for three-core copper cables routed horizontally in air at 40° C ambient temperature (according to DIN VDE 0276-1000 and IEC 60364-5-52) with a permissible operating temperature of 70° C (e.g. Protodur NYY or NYCWY) and the recommended conductor protection according to DIN VDE 0100 section 430 and IEC 60364-4-43.

NOTICE

Material damage caused by impermissible cable temperatures

The improper laying of cables can produce short-circuits caused by damage of the insulation that result from excessive temperatures.

When the conditions differ from the above stated (cable routing, cable grouping, ambient temperature), the following instructions for routing the cables must be taken into account:

- The required cable cross-section depends on the amperage which flows through the cable.
- The permissible current loading of cables is defined, for example, in DIN VDE 0276-1000 and IEC 60364-5-52. It depends partly on ambient conditions such as temperature and partly on the type of routing. If the cables are routed individually, they will be cooled relatively well. If several cables are routed together, they may heat each other up. Please note the corresponding derating factors for these supplementary conditions in DIN VDE 0276-1000 and IEC 60364-5-52.

12.3.1 Cabinet units, 380 V ... 480 V 3 AC

Table 12- 8 Cabinet units, 380 ... 480 V 3 AC, Part 1

Article number	6SL3710-	7LE32-1AA3	7LE32-6AA3	7LE33-1AA3
Unit rating - for I_L at 50 Hz 400 V [1)] - for I_H at 50 Hz 400 V [1)] - for I_L at 60 Hz 460 V [2)] - for I_H at 60 Hz 460 V [2)]	 kW kW hp hp	 110 90 150 150	 132 110 200 200	 160 132 250 200
Output current - Rated current $I_{N\,A}$ [3)] - Base load current I_L [4)] - Base load current I_H [5)] - Max. current $I_{max\,A}$	 A A A A	 210 205 178 307	 260 250 233 375	 310 302 277 453
Infeed/regenerative current - Rated current $I_{N\,E}$ [6)] - Maximum current $I_{max\,E}$	 A A	 197 315	 242 390	 286 467
Max. current requirement - Auxiliary 24 V DC supply	 A	 Internal	 Internal	 Internal
Supply voltages - Line voltage - Line frequency - Electronic power supply	 V_{ACrms} Hz V_{DC}	 380 V 3 AC -10 % to 480 V 3 AC +10 % (-15 % < 1 min) 47 to 63 Hz 24 (20.4 to 28.8)		
Power loss, max. - at 50 Hz, 400 V - at 60 Hz, 460 V	 kW kW	 6.31 6.49	 7.55 7.85	 10.01 10.45
Cooling air requirement	m^3/s	0.58	0.70	1.19
Sound pressure level L_{pA} (1 m) at 50/60 Hz	dB(A)	71/73	71/73	72/74
Line connection - Recommended: IEC [7)] - maximum: IEC - Fixing screw	 mm^2 mm^2	 2 x 70 4 x 240 M12 (2 holes)	 2 x 95 4 x 240 M12 (2 holes)	 2 x 120 4 x 240 M12 (2 holes)
Motor connection - Recommended: IEC [7)] - maximum: IEC - Fixing screw	 mm^2 mm^2	 2 x 70 2 x 150 M12 (2 holes)	 2 x 95 2 x 150 M12 (2 holes)	 2 x 120 2 x 150 M12 (2 holes)
Protective conductor connection Fixing screw		 M12 (2 holes)	 M12 (2 holes)	 M12 (2 holes)
Max. motor cable length shielded / unshielded	 m	 300 / 450	 300 / 450	 300 / 450
Dimensions (standard version) - Width - Height - Depth	 mm mm mm	 1400 2000 600	 1400 2000 600	 1600 2000 600
Frame sizes - Active Interface Module - Active Line Module - Motor Module		 FI FX FX	 FI FX FX	 GI GX GX
Weight (without options), approx.	kg	708	708	892

Article number	6SL3710-	7LE32-1AA3	7LE32-6AA3	7LE33-1AA3
Recommended protection - Line protection (with option L26) Rated current frame size to IEC 60269 - Line and semiconductor protection (without option L26) Rated current Frame size to IEC 60269	 A A	 3NA3252 315 2 3NE1230-2 315 1	 3NA3254 355 2 3NE1331-2 350 2	 3NA3365 500 3 3NE1334-2 500 2
Maximum short-circuit current I_{CC} acc. to IEC [8]	kA	65	65	65
Minimum short-circuit current [9]	kA	3	3	4.5

[1] Rated output of a typical 6-pole standard induction motor based on I_L or I_H at 400 V 3 AC 50 Hz.

[2] Rated output of a typical 6-pole standard induction motor based on I_L or I_H at 460 V 3 AC 60 Hz.

[3] The currents are based on a line power factor of cos φ = 1.

[4] The base-load current I_L is based on a duty cycle of 110% for 60 s or 150% for 10 s with a duty cycle duration of 300 s (see "Overload capability").

[5] The base-load current I_H is based on a duty cycle of 150% for 60 s or 160% for 10 s with a duty cycle duration of 300 s (see "Overload capability").

[6] The current values given here are based on the rated output current.

[7] The recommendations for the North American market in AWG or MCM must be taken from the appropriate NEC (National Electrical Code) or CEC (Canadian Electrical Code) standards.

[8] In conjunction with the specified fuses or circuit breakers.

[9] Minimum current required for reliably triggering protective devices.

Table 12- 9 Cabinet units, 380 ... 480 V 3 AC, Part 2

Article number	6SL3710-	7LE33-8AA3	7LE35-0AA3	7LE36-1AA3
Unit rating - for I_L at 50 Hz 400 V [1)] - for I_H at 50 Hz 400 V [1)] - for I_L at 60 Hz 460 V [2)] - for I_H at 60 Hz 460 V [2)]	 kW kW hp hp	 200 160 300 250	 250 200 400 350	 315 250 500 350
Output current - Rated current $I_{N\,A}$ [3)] - Base load current I_L [4)] - Base load current I_H [5)] - Max. current $I_{max\,A}$	 A A A A	 380 370 340 555	 490 477 438 715	 605 590 460 885
Infeed/regenerative current - Rated current $I_{N\,E}$ [6)] - Maximum current $I_{max\,E}$	 A A	 349 570	 447 735	 549 907
Max. current requirement - Auxiliary 24 V DC supply	 A	 Internal	 Internal	 Internal
Supply voltages - Line voltage - Line frequency - Electronic power supply	 V_{ACrms} Hz V_{DC}	 380 V 3 AC -10 % to 480 V 3 AC +10 % (-15 % < 1 min) 47 to 63 Hz 24 (20.4 to 28.8)		
Power loss, max. - at 50 Hz, 400 V - at 60 Hz, 460 V	 kW kW	 10.72 11.15	 13.13 13.65	 17.69 18.55
Cooling air requirement	m^3/s	1.19	1.19	1.96
Sound pressure level L_{pA} (1 m) at 50/60 Hz	dB(A)	72/74	72/74	77/79
Line connection - Recommended: IEC [7)] - maximum: IEC - Fixing screw	 mm^2 mm^2	 2 x 120 4 x 240 M12 (2 holes)	 2 x 240 4 x 240 M12 (2 holes)	 2 x 240 4 x 240 M12 (2 holes)
Motor connection - Recommended: IEC [7)] - maximum: IEC - Fixing screw	 mm^2 mm^2	 2 x 120 2 x 150 M12 (2 holes)	 2 x 185 2 x 240 M12 (2 holes)	 2 x 240 4 x 240 M12 (2 holes)
Protective conductor connection Fixing screw		 M12 (2 holes)	 M12 (2 holes)	 M12 (2 holes)
Max. motor cable length shielded / unshielded	 m	 300 / 450	 300 / 450	 300 / 450
Dimensions (standard version) - Width - Height - Depth	 mm mm mm	 1800 2000 600	 1800 2000 600	 2200 2000 600
Frame sizes - Active Interface Module - Active Line Module - Motor Module		 GI GX GX	 GI GX GX	 HI HX HX
Weight (without options), approx.	kg	980	980	1716

Article number	6SL3710-	7LE33-8AA3	7LE35-0AA3	7LE36-1AA3
Recommended protection - Line protection (with option L26) Rated current frame size to IEC 60269 - Line and semiconductor protection (without option L26) Rated current Frame size to IEC 60269	 A A	 3NA3365 500 3 3NE1334-2 500 2	 3NA3372 630 3 3NE1436-2 630 3	 3NA3475 800 4 3NE1438-2 800 3
Maximum short-circuit current I_{CC} acc. to IEC [8]	kA	50	50	50
Minimum short-circuit current [9]	kA	4.5	8	12

[1] Rated output of a typical 6-pole standard induction motor based on I_L or I_H at 400 V 3 AC 50 Hz.

[2] Rated output of a typical 6-pole standard induction motor based on I_L or I_H at 460 V 3 AC 60 Hz.

[3] The currents are based on a line power factor of cos φ = 1.

[4] The base-load current I_L is based on a duty cycle of 110% for 60 s or 150% for 10 s with a duty cycle duration of 300 s (see "Overload capability").

[5] The base-load current I_H is based on a duty cycle of 150% for 60 s or 160% for 10 s with a duty cycle duration of 300 s (see "Overload capability").

[6] The current values given here are based on the rated output current.

[7] The recommendations for the North American market in AWG or MCM must be taken from the appropriate NEC (National Electrical Code) or CEC (Canadian Electrical Code) standards.

[8] In conjunction with the specified fuses or circuit breakers.

[9] Minimum current required for reliably triggering protective devices.

Table 12- 10 Cabinet units, 380 ... 480 V 3 AC, Part 3

Article number	6SL3710-	7LE37-5AA3	7LE38-4AA3	7LE41-0AA3
Unit rating - for I_L at 50 Hz 400 V [1)] - for I_H at 50 Hz 400 V [1)] - for I_L at 60 Hz 460 V [2)] - for I_H at 60 Hz 460 V [2)]	 kW kW hp hp	 400 315 600 450	 450 400 700 600	 560 450 800 700
Output current - Rated current $I_{N\,A}$ [3)] - Base load current I_L [4)] - Base load current I_H [5)] - Max. current $I_{max\,A}$	 A A A A	 745 725 570 1087	 840 820 700 1230	 985 960 860 1440
Infeed/regenerative current - Rated current $I_{N\,E}$ [6)] - Maximum current $I_{max\,E}$	 A A	 674 1118	 759 1260	 888 1477
Max. current requirement - Auxiliary 24 V DC supply	 A	 Internal	 Internal	 Internal
Supply voltages - Line voltage - Line frequency - Electronic power supply	 V_{ACrms} Hz V_{DC}	 380 V 3 AC -10 % to 480 V 3 AC +10 % (-15 % < 1 min) 47 to 63 Hz 24 (20.4 to 28.8)		
Power loss, max. - at 50 Hz, 400 V - at 60 Hz, 460 V	 kW kW	 20.63 11.15	 21.1 13.65	 27.25 18.55
Cooling air requirement	m^3/s	1.96	1.96	2.6
Sound pressure level L_{pA} (1 m) at 50/60 Hz	dB(A)	77/79	77/79	77/79
Line connection - Recommended: IEC [7)] - maximum: IEC - Fixing screw	 mm^2 mm^2	 2 x 300 4 x 240 M12 (2 holes)	 4 x 150 8 x 240 M12 (4 holes)	 4 x 185 8 x 240 M12 (4 holes)
Motor connection - Recommended: IEC [7)] - maximum: IEC - Fixing screw	 mm^2 mm^2	 2 x 300 4 x 240 M12 (2 holes)	 4 x 150 4 x 240 M12 (2 holes)	 4 x 185 6 x 240 M12 (3 holes)
Protective conductor connection Fixing screw		 M12 (10 holes)	 M12 (16 holes)	 M12 (18 holes)
Max. motor cable length shielded / unshielded	 m	 300 / 450	 300 / 450	 300 / 450
Dimensions (standard version) - Width - Height - Depth	 mm mm mm	 2200 2000 600	 2200 2000 600	 2800 2000 600
Frame sizes - Active Interface Module - Active Line Module - Motor Module		 HI HX HX	 HI HX HX	 JI JX JX
Weight (without options), approx.	kg	1731	1778	2408

Article number	6SL3710-	7LE37-5AA3	7LE38-4AA3	7LE41-0AA3
Recommended protection - Line protection (with option L26) Rated current frame size to IEC 60269 - Line and semiconductor protection (without option L26) Rated current Frame size to IEC 60269	 A A	 3NA3475 800 4 3NE1448-2 850 3	 Circuit breaker Circuit breaker	 Circuit breaker Circuit breaker
Maximum short-circuit current I_{CC} acc. to IEC [8]	kA	50	55	55
Minimum short-circuit current [9]	kA	15	2	2.5

[1] Rated output of a typical 6-pole standard induction motor based on I_L or I_H at 400 V 3 AC 50 Hz.

[2] Rated output of a typical 6-pole standard induction motor based on I_L or I_H at 460 V 3 AC 60 Hz.

[3] The currents are based on a line power factor of cos φ = 1.

[4] The base-load current I_L is based on a duty cycle of 110% for 60 s or 150% for 10 s with a duty cycle duration of 300 s (see "Overload capability").

[5] The base-load current I_H is based on a duty cycle of 150% for 60 s or 160% for 10 s with a duty cycle duration of 300 s (see "Overload capability").

[6] The current values given here are based on the rated output current.

[7] The recommendations for the North American market in AWG or MCM must be taken from the appropriate NEC (National Electrical Code) or CEC (Canadian Electrical Code) standards.

[8] In conjunction with the specified fuses or circuit breakers.

[9] Minimum current required for reliably triggering protective devices.

Table 12- 11 Cabinet units, 380 ... 480 V 3 AC, Part 4

Article number	6SL3710-	7LE41-2AA3	7LE41-4AA3	
Unit rating - for I_L at 50 Hz 400 V [1)] - for I_H at 50 Hz 400 V [1)] - for I_L at 60 Hz 460 V [2)] - for I_H at 60 Hz 460 V [2)]	 kW kW hp hp	 710 560 1000 900	 800 710 1000 1000	
Output current - Rated current $I_{N\,A}$ [3)] - Base load current I_L [4)] - Base load current I_H [5)] - Max. current $I_{max\,A}$	 A A A A	 1260 1230 1127 1845	 1405 1370 1257 2055	
Infeed/regenerative current - Rated current $I_{N\,E}$ [6)] - Maximum current $I_{max\,E}$	 A A	 1133 1891	 1262 2107	
Max. current requirement - Auxiliary 24 V DC supply	 A	 Internal	 Internal	
Supply voltages - Line voltage - Line frequency - Electronic power supply	 V_{ACrms} Hz V_{DC}	 380 V 3 AC -10 % to 480 V 3 AC +10 % (-15 % < 1 min) 47 to 63 Hz 24 (20.4 to 28.8)		
Power loss, max. - at 50 Hz, 400 V - at 60 Hz, 460 V	 kW kW	 33.05 34.85	 33.95 35.85	
Cooling air requirement	m^3/s	2.6	2.6	
Sound pressure level L_{pA} (1 m) at 50/60 Hz	dB(A)	78/80	78/80	
Line connection - Recommended: IEC [7)] - maximum: IEC - Fixing screw	 mm^2 mm^2	 4 x 240 8 x 240 M12 (4 holes)	 6 x 185 8 x 240 M12 (4 holes)	
Motor connection - Recommended: IEC [7)] - maximum: IEC - Fixing screw	 mm^2 mm^2	 4 x 240 6 x 240 M12 (3 holes)	 6 x 185 6 x 240 M12 (3 holes)	
Protective conductor connection Fixing screw		 M12 (18 holes)	 M12 (18 holes)	
Max. motor cable length shielded / unshielded	 m	 300 / 450	 300 / 450	
Dimensions (standard version) - Width - Height - Depth	 mm mm mm	 2800 2000 600	 2800 2000 600	
Frame sizes - Active Interface Module - Active Line Module - Motor Module		 JI JX JX	 JI JX JX	
Weight (without options), approx.	kg	2408	2408	

Article number	6SL3710-	7LE41-2AA3	7LE41-4AA3	
Recommended protection - Line protection (with option L26) Rated current frame size to IEC 60269 - Line and semiconductor protection (without option L26) Rated current Frame size to IEC 60269	 A A	 Circuit breaker Circuit breaker	 Circuit breaker Circuit breaker	
Maximum short-circuit current I_{CC} acc. to IEC [8]	kA	55	55	
Minimum short-circuit current [9]	kA	3.2	3.2	

[1] Rated output of a typical 6-pole standard induction motor based on I_L or I_H at 400 V 3 AC 50 Hz.

[2] Rated output of a typical 6-pole standard induction motor based on I_L or I_H at 460 V 3 AC 60 Hz.

[3] The currents are based on a line power factor of cos φ = 1.

[4] The base-load current I_L is based on a duty cycle of 110% for 60 s or 150% for 10 s with a duty cycle duration of 300 s (see "Overload capability").

[5] The base-load current I_H is based on a duty cycle of 150% for 60 s or 160% for 10 s with a duty cycle duration of 300 s (see "Overload capability").

[6] The current values given here are based on the rated output current.

[7] The recommendations for the North American market in AWG or MCM must be taken from the appropriate NEC (National Electrical Code) or CEC (Canadian Electrical Code) standards.

[8] In conjunction with the specified fuses or circuit breakers.

[9] Minimum current required for reliably triggering protective devices.

12.3.2 Cabinet units, 500 ... 690 V 3 AC

Table 12- 12 Cabinet units, 500 ... 690 V 3 AC, Part 1

Article number	6SL3710-	7LG28-5AA3	7LG31-0AA3	7LG31-2AA3
Unit rating - for I_L at 50 Hz 690 V [1)] - for I_H at 50 Hz 690 V [1)] - for I_L at 50 Hz 500 V [1)] - for I_H at 50 Hz 500 V [1)] - for I_L at 60 Hz 575 V [2)] - for I_H at 60 Hz 575 V [2)]	 kW kW kW kW hp hp	 75 55 55 45 75 75	 90 75 55 55 75 75	 110 90 75 75 100 100
Output current - Rated current $I_{N\,A}$ [3)] - Base load current I_L [4)] - Base load current I_H [5)] - Max. current $I_{max\,A}$	 A A A A	 85 80 76 120	 100 95 89 142	 120 115 107 172
Infeed/regenerative current - Rated current $I_{N\,E}$ [6)] - Maximum current $I_{max\,E}$	 A A	 86 125	 99 144	 117 170
Max. current requirement - Auxiliary 24 V DC supply	 A	 Internal	 Internal	 Internal
Supply voltages - Line voltage - Line frequency - Electronic power supply	 V_{ACrms} Hz V_{DC}	 500 V 3 AC -10 % to 690 V 3 AC +10 % (-15 % < 1 min) 47 to 63 Hz 24 (20.4 to 28.8)		
Power loss, max. - at 50 Hz, 690 V - at 60 Hz, 575 V	 kW kW	 5.12 4.45	 5.38 4.65	 5.84 5.12
Cooling air requirement	m^3/s	0.58	0.58	0.58
Sound pressure level L_{pA} (1 m) at 50/60 Hz	dB(A)	71/73	71/73	71/73
Line connection - Recommended: IEC [7)] - maximum: IEC - Fixing screw	 mm^2 mm^2	 50 4 x 240 M12 (2 holes)	 50 4 x 240 M12 (2 holes)	 70 4 x 240 M12 (2 holes)
Motor connection - Recommended: IEC [7)] - maximum: IEC - Fixing screw	 mm^2 mm^2	 50 2 x 70 M12 (2 holes)	 50 2 x 150 M12 (2 holes)	 70 2 x 150 M12 (2 holes)
Protective conductor connection Fixing screw		 M12 (2 holes)	 M12 (2 holes)	 M12 (2 holes)
Max. motor cable length shielded / unshielded	 m	 300 / 450	 300 / 450	 300 / 450
Dimensions (standard version) - Width - Height - Depth	 mm mm mm	 1400 2000 600	 1400 2000 600	 1400 2000 600
Frame sizes - Active Interface Module - Active Line Module - Motor Module		 FI FX FX	 FI FX FX	 FI FX FX
Weight (without options), approx.	kg	708	708	708

Article number	6SL3710-	7LG28-5AA3	7LG31-0AA3	7LG31-2AA3
Recommended protection - Line protection (with option L26) Rated current frame size to IEC 60269 - Line and semiconductor protection (without option L26) Rated current Frame size to IEC 60269	 A A	 3NA3132-6 125 1 3NE1022-2 125 00	 3NA3132-6 125 1 3NE1022-2 125 00	 3NA3136-6 160 1 3NE1224-2 160 1
Maximum short-circuit current I_{CC} acc. to IEC [8]	kA	65	65	65
Minimum short-circuit current [9]	kA	1	1	1.3

[1] Rated output of a typical 6-pole standard induction motor based on I_L or I_H at 500 V 3 AC 50 Hz or 690 V 3 AC 50 Hz.

[2] Rated output of a typical 6-pole standard induction motor based on I_L or I_H at 575 V 3 AC 60 Hz.

[3] The currents are based on a line power factor of cos φ = 1.

[4] The base-load current I_L is based on a duty cycle of 110% for 60 s or 150% for 10 s with a duty cycle duration of 300 s (see "Overload capability").

[5] The base-load current I_H is based on a duty cycle of 150% for 60 s or 160% for 10 s with a duty cycle duration of 300 s (see "Overload capability").

[6] The current values given here are based on the rated output current.

[7] The recommendations for the North American market in AWG or MCM must be taken from the appropriate NEC (National Electrical Code) or CEC (Canadian Electrical Code) standards.

[8] In conjunction with the specified fuses or circuit breakers.

[9] Minimum current required for reliably triggering protective devices.

Table 12- 13 Cabinet units, 500 ... 690 V 3 AC, Part 2

Article number	6SL3710-	7LG31-5AA3	7LG31-8AA3	7LG32-2AA3
Unit rating - for I_L at 50 Hz 690 V [1)] - for I_H at 50 Hz 690 V [1)] - for I_L at 50 Hz 500 V [1)] - for I_H at 50 Hz 500 V [1)] - for I_L at 60 Hz 575 V [2)] - for I_H at 60 Hz 575 V [2)]	 kW kW kW kW hp hp	 132 110 90 90 150 125	 160 132 110 90 150 150	 200 160 132 110 200 200
Output current - Rated current $I_{N\,A}$ [3)] - Base load current I_L [4)] - Base load current I_H [5)] - Max. current $I_{max\,A}$	 A A A A	 150 142 134 213	 175 170 157 255	 215 208 192 312
Infeed/regenerative current - Rated current $I_{N\,E}$ [6)] - Maximum current $I_{max\,E}$	 A A	 144 210	 166 253	 202 308
Max. current requirement - Auxiliary 24 V DC supply	 A	 Internal	 Internal	 Internal
Supply voltages - Line voltage - Line frequency - Electronic power supply	 V_{ACrms} Hz V_{DC}	 500 V 3 AC -10 % to 690 V 3 AC +10 % (-15 % < 1 min) 47 to 63 Hz 24 (20.4 to 28.8)		
Power loss, max. - at 50 Hz, 690 V - at 60 Hz, 575 V	 kW kW	 5.75 4.97	 11.02 11.15	 11.44 11.56
Cooling air requirement	m^3/s	0.58	1.19	1.19
Sound pressure level L_{pA} (1 m) at 50/60 Hz	dB(A)	71/73	75/77	75/77
Line connection - Recommended: IEC [7)] - maximum: IEC - Fixing screw	 mm^2 mm^2	 95 4 x 240 M12 (2 holes)	 120 4 x 240 M12 (2 holes)	 2 x 70 4 x 240 M12 (2 holes)
Motor connection - Recommended: IEC [7)] - maximum: IEC - Fixing screw	 mm^2 mm^2	 95 2 x 150 M12 (2 holes)	 120 2 x 150 M12 (2 holes)	 2 x 70 2 x 150 M12 (2 holes)
Protective conductor connection Fixing screw		 M12 (2 holes)	 M12 (2 holes)	 M12 (2 holes)
Max. motor cable length shielded / unshielded	 m	 300 / 450	 300 / 450	 300 / 450
Dimensions (standard version) - Width - Height - Depth	 mm mm mm	 1400 2000 600	 1600 2000 600	 1600 2000 600
Frame sizes - Active Interface Module - Active Line Module - Motor Module		 FI FX FX	 GI GX GX	 GI GX GX
Weight (without options), approx.	kg	708	892	892

Article number	6SL3710-	7LG31-5AA3	7LG31-8AA3	7LG32-2AA3
Recommended protection - Line protection (with option L26) Rated current frame size to IEC 60269 - Line and semiconductor protection (without option L26) Rated current Frame size to IEC 60269	 A A	 3NA3240-6 200 2 3NE1225-2 200 1	 3NA3244-6 250 2 3NE1227-2 250 1	 3NA3252-6 315 2 3NE1230-2 315 1
Maximum short-circuit current I_{CC} acc. to IEC [8]	kA	65	65	65
Minimum short-circuit current [9]	kA	1.8	2.5	3

[1] Rated output of a typical 6-pole standard induction motor based on I_L or I_H at 500 V 3 AC 50 Hz or 690 V 3 AC 50 Hz.

[2] Rated output of a typical 6-pole standard induction motor based on I_L or I_H at 575 V 3 AC 60 Hz.

[3] The currents are based on a line power factor of cos φ = 1.

[4] The base-load current I_L is based on a duty cycle of 110% for 60 s or 150% for 10 s with a duty cycle duration of 300 s (see "Overload capability").

[5] The base-load current I_H is based on a duty cycle of 150% for 60 s or 160% for 10 s with a duty cycle duration of 300 s (see "Overload capability").

[6] The current values given here are based on the rated output current.

[7] The recommendations for the North American market in AWG or MCM must be taken from the appropriate NEC (National Electrical Code) or CEC (Canadian Electrical Code) standards.

[8] In conjunction with the specified fuses or circuit breakers.

[9] Minimum current required for reliably triggering protective devices.

Table 12- 14 Cabinet units, 500 ... 690 V 3 AC, Part 3

Article number	6SL3710-	7LG32-6AA3	7LG33-3AA3	7LG34-1AA3
Unit rating - for I_L at 50 Hz 690 V [1)] - for I_H at 50 Hz 690 V [1)] - for I_L at 50 Hz 500 V [1)] - for I_H at 50 Hz 500 V [1)] - for I_L at 60 Hz 575 V [2)] - for I_H at 60 Hz 575 V [2)]	 kW kW kW kW hp hp	 250 200 160 132 250 200	 315 250 200 160 300 250	 400 315 250 200 400 350
Output current - Rated current $I_{N\,A}$ [3)] - Base load current I_L [4)] - Base load current I_H [5)] - Max. current $I_{max\,A}$	 A A A A	 260 250 233 375	 330 320 280 480	 410 400 367 600
Infeed/regenerative current - Rated current $I_{N\,E}$ [6)] - Maximum current $I_{max\,E}$	 A A	 242 370	 304 465	 375 619
Max. current requirement - Auxiliary 24 V DC supply	 A	 Internal	 Internal	 Internal
Supply voltages - Line voltage - Line frequency - Electronic power supply	 V_{ACrms} Hz V_{DC}	 500 V 3 AC -10 % to 690 V 3 AC +10 % (-15 % < 1 min) 47 to 63 Hz 24 (20.4 to 28.8)		
Power loss, max. - at 50 Hz, 690 V - at 60 Hz, 575 V	 kW kW	 11.97 12.03	 12.69 12.63	 19.88 18.86
Cooling air requirement	m^3/s	1.19	1.19	1.96
Sound pressure level L_{pA} (1 m) at 50/60 Hz	dB(A)	75/77	75/77	77/79
Line connection - Recommended: IEC [7)] - maximum: IEC - Fixing screw	 mm^2 mm^2	 2 x 95 4 x 240 M12 (2 holes)	 2 x 120 4 x 240 M12 (2 holes)	 2 x 185 4 x 240 M12 (2 holes)
Motor connection - Recommended: IEC [7)] - maximum: IEC - Fixing screw	 mm^2 mm^2	 2 x 95 2 x 185 M12 (2 holes)	 2 x 120 2 x 240 M12 (2 holes)	 2 x 185 4 x 240 M12 (2 holes)
Protective conductor connection Fixing screw		 M12 (2 holes)	 M12 (2 holes)	 M12 (2 holes)
Max. motor cable length shielded / unshielded	 m	 300 / 450	 300 / 450	 300 / 450
Dimensions (standard version) - Width - Height - Depth	 mm mm mm	 1600 2000 600	 1600 2000 600	 2200 2000 600
Frame sizes - Active Interface Module - Active Line Module - Motor Module		 GI GX GX	 GI GX GX	 HI HX HX
Weight (without options), approx.	kg	892	892	1716

Article number	6SL3710-	7LG32-6AA3	7LG33-3AA3	7LG34-1AA3
Recommended protection - Line protection (with option L26) Rated current frame size to IEC 60269 - Line and semiconductor protection (without option L26) Rated current Frame size to IEC 60269	 A A	 3NA3354-6 355 3 3NE1331-2 350 2	 3NA3365-6 500 3 3NE1334-2 500 2	 3NA3365-6 500 3 3NE1334-2 500 2
Maximum short-circuit current I_{CC} acc. to IEC [8]	kA	65	65	50
Minimum short-circuit current [9]	kA	3	4.5	4.5

[1] Rated output of a typical 6-pole standard induction motor based on I_L or I_H at 500 V 3 AC 50 Hz or 690 V 3 AC 50 Hz.

[2] Rated output of a typical 6-pole standard induction motor based on I_L or I_H at 575 V 3 AC 60 Hz.

[3] The currents are based on a line power factor of cos φ = 1.

[4] The base-load current I_L is based on a duty cycle of 110% for 60 s or 150% for 10 s with a duty cycle duration of 300 s (see "Overload capability").

[5] The base-load current I_H is based on a duty cycle of 150% for 60 s or 160% for 10 s with a duty cycle duration of 300 s (see "Overload capability").

[6] The current values given here are based on the rated output current.

[7] The recommendations for the North American market in AWG or MCM must be taken from the appropriate NEC (National Electrical Code) or CEC (Canadian Electrical Code) standards.

[8] In conjunction with the specified fuses or circuit breakers.

[9] Minimum current required for reliably triggering protective devices.

Table 12- 15 Cabinet units, 500 ... 690 V 3 AC, Part 4

Article number	6SL3710-	7LG34-7AA3	7LG35-8AA3	7LG37-4AA3
Unit rating - for I_L at 50 Hz 690 V [1)] - for I_H at 50 Hz 690 V [1)] - for I_L at 50 Hz 500 V [1)] - for I_H at 50 Hz 500 V [1)] - for I_L at 60 Hz 575 V [2)] - for I_H at 60 Hz 575 V [2)]	 kW kW kW kW hp hp	 450 400 315 250 450 450	 560 450 400 315 600 500	 710 630 500 450 700 700
Output current - Rated current $I_{N\,A}$ [3)] - Base load current I_L [4)] - Base load current I_H [5)] - Max. current $I_{max\,A}$	 A A A A	 465 452 416 678	 575 560 514 840	 735 710 657 1065
Infeed/regenerative current - Rated current $I_{N\,E}$ [6)] - Maximum current $I_{max\,E}$	 A A	 424 700	 522 862	 665 1102
Max. current requirement - Auxiliary 24 V DC supply	 A	 Internal	 Internal	 Internal
Supply voltages - Line voltage - Line frequency - Electronic power supply	 V_{ACrms} Hz V_{DC}	 500 V 3 AC -10 % to 690 V 3 AC +10 % (-15 % < 1 min) 47 to 63 Hz 24 (20.4 to 28.8)		
Power loss, max. - at 50 Hz, 690 V - at 60 Hz, 575 V	 kW kW	 20.55 19.47	 24.05 22.85	 30.25 28.75
Cooling air requirement	m^3/s	1.96	1.96	2.6
Sound pressure level L_{pA} (1 m) at 50/60 Hz	dB(A)	77/79	77/79	77/79
Line connection - Recommended: IEC [7)] - maximum: IEC - Fixing screw	 mm^2 mm^2	 2 x 185 4 x 240 M12 (2 holes)	 2 x 240 4 x 240 M12 (2 holes)	 3 x 185 8 x 240 M12 (4 holes)
Motor connection - Recommended: IEC [7)] - maximum: IEC - Fixing screw	 mm^2 mm^2	 2 x 185 4 x 240 M12 (2 holes)	 2 x 240 4 x 240 M12 (2 holes)	 3 x 185 6 x 240 M12 (3 holes)
Protective conductor connection Fixing screw		 M12 (2 holes)	 M12 (2 holes)	 M12 (18 holes)
Max. motor cable length shielded / unshielded	 m	 300 / 450	 300 / 450	 300 / 450
Dimensions (standard version) - Width - Height - Depth	 mm mm mm	 2200 2000 600	 2200 2000 600	 2800 2000 600
Frame sizes - Active Interface Module - Active Line Module - Motor Module		 HI HX HX	 HI HX HX	 JI JX JX
Weight (without options), approx.	kg	1716	1716	2300

Article number	6SL3710-	7LG34-7AA3	7LG35-8AA3	7LG37-4AA3
Recommended protection - Line protection (with option L26) Rated current frame size to IEC 60269 - Line and semiconductor protection (without option L26) Rated current Frame size to IEC 60269	 A A	 3NA3352-6 2 x 315 2 3NE1435-2 560 3	 3NA3354-6 2 x 355 3 3NE1447-2 670 3	 3NA3365-6 2 x 500 3 3NE1448-2 850 3
Maximum short-circuit current I_{CC} acc. to IEC [8]	kA	50	50	50
Minimum short-circuit current [9]	kA	7	9	15

[1] Rated output of a typical 6-pole standard induction motor based on I_L or I_H at 500 V 3 AC 50 Hz or 690 V 3 AC 50 Hz.

[2] Rated output of a typical 6-pole standard induction motor based on I_L or I_H at 575 V 3 AC 60 Hz.

[3] The currents are based on a line power factor of cos φ = 1.

[4] The base-load current I_L is based on a duty cycle of 110% for 60 s or 150% for 10 s with a duty cycle duration of 300 s (see "Overload capability").

[5] The base-load current I_H is based on a duty cycle of 150% for 60 s or 160% for 10 s with a duty cycle duration of 300 s (see "Overload capability").

[6] The current values given here are based on the rated output current.

[7] The recommendations for the North American market in AWG or MCM must be taken from the appropriate NEC (National Electrical Code) or CEC (Canadian Electrical Code) standards.

[8] In conjunction with the specified fuses or circuit breakers.

[9] Minimum current required for reliably triggering protective devices.

Table 12- 16 Cabinet units, 500 ... 690 V 3 AC, Part 5

Article number	6SL3710-	7LG38-1AA3	7LG38-8AA3	7LG41-0AA3
Unit rating - for I_L at 50 Hz 690 V [1)] - for I_H at 50 Hz 690 V [1)] - for I_L at 50 Hz 500 V [1)] - for I_H at 50 Hz 500 V [1)] - for I_L at 60 Hz 575 V [2)] - for I_H at 60 Hz 575 V [2)]	 kW kW kW kW hp hp	 800 710 560 500 800 700	 900 800 630 560 900 800	 1000 900 710 630 1000 900
Output current - Rated current $I_{N\,A}$ [3)] - Base load current I_L [4)] - Base load current I_H [5)] - Max. current $I_{max\,A}$	 A A A A	 810 790 724 1185	 910 880 814 1320	 1025 1000 917 1500
Infeed/regenerative current - Rated current $I_{N\,E}$ [6)] - Maximum current $I_{max\,E}$	 A A	 732 1218	 821 1367	 923 1537
Max. current requirement - Auxiliary 24 V DC supply	 A	 Internal	 Internal	 Internal
Supply voltages - Line voltage - Line frequency - Electronic power supply	 V_{ACrms} Hz V_{DC}	 500 V 3 AC -10 % to 690 V 3 AC +10 % (-15 % < 1 min) 47 to 63 Hz 24 (20.4 to 28.8)		
Power loss, max. - at 50 Hz, 690 V - at 60 Hz, 575 V	 kW kW	 34.45 32.75	 34.65 32.85	 36.15 34.25
Cooling air requirement	m^3/s	2.6	2.6	2.6
Sound pressure level L_{pA} (1 m) at 50/60 Hz	dB(A)	77/79	77/79	77/79
Line connection - Recommended: IEC [7)] - maximum: IEC - Fixing screw	 mm^2 mm^2	 4 x 150 8 x 240 M12 (4 holes)	 4 x 150 8 x 240 M12 (4 holes)	 4 x 185 8 x 240 M12 (4 holes)
Motor connection - Recommended: IEC [7)] - maximum: IEC - Fixing screw	 mm^2 mm^2	 4 x 150 6 x 240 M12 (3 holes)	 4 x 150 6 x 240 M12 (3 holes)	 4 x 185 6 x 240 M12 (3 holes)
Protective conductor connection Fixing screw		 M12 (18 holes)	 M12 (18 holes)	 M12 (18 holes)
Max. motor cable length shielded / unshielded	 m	 300 / 450	 300 / 450	 300 / 450
Dimensions (standard version) - Width - Height - Depth	 mm mm mm	 2800 2000 600	 2800 2000 600	 2800 2000 600
Frame sizes - Active Interface Module - Active Line Module - Motor Module		 JI JX JX	 JI JX JX	 JI JX JX
Weight (without options), approx.	kg	2408	2408	2408

Article number	6SL3710-	7LG38-1AA3	7LG38-8AA3	7LG41-0AA3
Recommended protection - Line protection (with option L26) Rated current frame size to IEC 60269 - Line and semiconductor protection (without option L26) Rated current Frame size to IEC 60269	 A A	 Circuit breaker Circuit breaker	 Circuit breaker Circuit breaker	 Circuit breaker Circuit breaker
Maximum short-circuit current I_{CC} acc. to IEC [8]	kA	85	85	85
Minimum short-circuit current [9]	kA	2	2	2.5

[1] Rated output of a typical 6-pole standard induction motor based on I_L or I_H at 500 V 3 AC 50 Hz or 690 V 3 AC 50 Hz.

[2] Rated output of a typical 6-pole standard induction motor based on I_L or I_H at 575 V 3 AC 60 Hz.

[3] The currents are based on a line power factor of cos φ = 1.

[4] The base-load current I_L is based on a duty cycle of 110% for 60 s or 150% for 10 s with a duty cycle duration of 300 s (see "Overload capability").

[5] The base-load current I_H is based on a duty cycle of 150% for 60 s or 160% for 10 s with a duty cycle duration of 300 s (see "Overload capability").

[6] The current values given here are based on the rated output current.

[7] The recommendations for the North American market in AWG or MCM must be taken from the appropriate NEC (National Electrical Code) or CEC (Canadian Electrical Code) standards.

[8] In conjunction with the specified fuses or circuit breakers.

[9] Minimum current required for reliably triggering protective devices.

Table 12- 17 Cabinet units, 500 ... 690 V 3 AC, Part 6

Article number	6SL3710-	7LG41-3AA3		
Unit rating - for I_L at 50 Hz 690 V [1)] - for I_H at 50 Hz 690 V [1)] - for I_L at 50 Hz 500 V [1)] - for I_H at 50 Hz 500 V [1)] - for I_L at 60 Hz 575 V [2)] - for I_H at 60 Hz 575 V [2)]	 kW kW kW kW hp hp	 1200 1000 900 800 1250 1000		
Output current - Rated current $I_{N\,A}$ [3)] - Base load current I_L [4)] - Base load current I_H [5)] - Max. current $I_{max\,A}$	 A A A A	 1270 1230 1136 1845		
Infeed/regenerative current - Rated current $I_{N\,E}$ [6)] - Maximum current $I_{max\,E}$	 A A	 1142 1905		
Max. current requirement - Auxiliary 24 V DC supply	 A	 Internal		
Supply voltages - Line voltage - Line frequency - Electronic power supply	 V_{ACrms} Hz V_{DC}	 500 V 3 AC -10 % to 690 V 3 AC +10 % (-15 % < 1 min) 47 to 63 Hz 24 (20.4 to 28.8)		
Power loss, max. - at 50 Hz, 690 V - at 60 Hz, 575 V	 kW kW	 42.25 39.25		
Cooling air requirement	m^3/s	2.6		
Sound pressure level L_{pA} (1 m) at 50/60 Hz	dB(A)	77/79		
Line connection - Recommended: IEC [7)] - maximum: IEC - Fixing screw	 mm^2 mm^2	 4 x 240 8 x 240 M12 (4 holes)		
Motor connection - Recommended: IEC [7)] - maximum: IEC - Fixing screw	 mm^2 mm^2	 4 x 240 6 x 240 M12 (3 holes)		
Protective conductor connection Fixing screw		 M12 (18 holes)		
Max. motor cable length shielded / unshielded	 m	 300 / 450		
Dimensions (standard version) - Width - Height - Depth	 mm mm mm	 2800 2000 600		
Frame sizes - Active Interface Module - Active Line Module - Motor Module		 JI JX JX		
Weight (without options), approx.	kg	2408		

Article number	6SL3710-	7LG41-3AA3		
Recommended protection - Line protection (with option L26) Rated current frame size to IEC 60269 - Line and semiconductor protection (without option L26) Rated current Frame size to IEC 60269	 A A	 Circuit breaker Circuit breaker		
Maximum short-circuit current I_{CC} acc. to IEC [8]	kA	85		
Minimum short-circuit current [9]	kA	3.2		

[1] Rated output of a typical 6-pole standard induction motor based on I_L or I_H at 500 V 3 AC 50 Hz or 690 V 3 AC 50 Hz.

[2] Rated output of a typical 6-pole standard induction motor based on I_L or I_H at 575 V 3 AC 60 Hz.

[3] The currents are based on a line power factor of cos φ = 1.

[4] The base-load current I_L is based on a duty cycle of 110% for 60 s or 150% for 10 s with a duty cycle duration of 300 s (see "Overload capability").

[5] The base-load current I_H is based on a duty cycle of 150% for 60 s or 160% for 10 s with a duty cycle duration of 300 s (see "Overload capability").

[6] The current values given here are based on the rated output current.

[7] The recommendations for the North American market in AWG or MCM must be taken from the appropriate NEC (National Electrical Code) or CEC (Canadian Electrical Code) standards.

[8] In conjunction with the specified fuses or circuit breakers.

[9] Minimum current required for reliably triggering protective devices.

Appendix

A

A.1 Environmental compatibility

For environmentally friendly recycling and disposal of your old device, please contact a company certified for the disposal of old electrical and electronic devices and dispose of the device in accordance with the regulations in your country.

A.2 List of abbreviations

Note

The following list of abbreviations includes all abbreviations and their meanings used in the entire SINAMICS family of drives.

Abbreviation	Derivation of abbreviation	Meaning
A		
A...	Alarm	Warning
AC	Alternating Current	Alternating current
ADC	Analog Digital Converter	Analog digital converter
AI	Analog Input	Analog input
AIM	Active Interface Module	Active Interface Module
ALM	Active Line Module	Active Line Module
AO	Analog Output	Analog output
AOP	Advanced Operator Panel	Advanced Operator Panel
APC	Advanced Positioning Control	Advanced Positioning Control
AR	Automatic Restart	Automatic restart
ASC	Armature Short-Circuit	Armature short-circuit
ASCII	American Standard Code for Information Interchange	American coding standard for the exchange of information
AS-i	AS-Interface (Actuator Sensor Interface)	AS-Interface (open bus system in automation technology)
ASM	Asynchronmotor	Induction motor
AVS	Active Vibration Suppression	Active load vibration damping
B		
BB	Betriebsbedingung	Operation condition
BERO	-	Contactless proximity switch
BI	Binector Input	Binector input
BIA	Berufsgenossenschaftliches Institut für Arbeitssicherheit	BG Institute for Occupational Safety and Health
BICO	Binector Connector Technology	Binector connector technology
BLM	Basic Line Module	Basic Line Module

Abbreviation	Derivation of abbreviation	Meaning
BO	Binector Output	Binector output
BOP	Basic Operator Panel	Basic operator panel
C		
C	Capacitance	Capacitance
C...	-	Safety message
CAN	Controller Area Network	Serial bus system
CBC	Communication Board CAN	Communication Board CAN
CBE	Communication Board Ethernet	PROFINET communication module (Ethernet)
CD	Compact Disc	Compact disc
CDS	Command Data Set	Command data set
CF Card	CompactFlash Card	CompactFlash card
CI	Connector Input	Connector input
CLC	Clearance Control	Clearance control
CNC	Computerized Numerical Control	Computer-supported numerical control
CO	Connector Output	Connector output
CO/BO	Connector Output/Binector Output	Connector/binector output
COB-ID	CAN Object-Identification	CAN Object Identification
CoL	Certificate of License	Certificate of License
COM	Common contact of a change-over relay	Center contact of a change-over contact
COMM	Commissioning	Commissioning
CP	Communication Processor	Communications processor
CPU	Central Processing Unit	Central processing unit
CRC	Cyclic Redundancy Check	Cyclic redundancy check
CSM	Control Supply Module	Control Supply Module
CU	Control Unit	Control Unit
CUA	Control Unit Adapter	Control Unit Adapter
CUD	Control Unit DC	Control Unit DC
D		
DAC	Digital Analog Converter	Digital analog converter
DC	Direct Current	Direct current
DCB	Drive Control Block	Drive Control Block
DCBRK	DC Brake	DC braking
DCC	Drive Control Chart	Drive Control Chart
DCN	Direct Current Negative	Direct current negative
DCP	Direct Current Positive	Direct current positive
DDC	Dynamic Drive Control	Dynamic Drive Control
DDS	Drive Data Set	Drive Data Set
DI	Digital Input	Digital input
DI/DO	Digital Input/Digital Output	Digital input/output, bidirectional
DMC	DRIVE-CLiQ Hub Module Cabinet	DRIVE-CLiQ Hub Module Cabinet
DME	DRIVE-CLiQ Hub Module External	DRIVE-CLiQ Hub Module External
DMM	Double Motor Module	Double Motor Module
DO	Digital Output	Digital output
DO	Drive Object	Drive object
DP	Decentralized Peripherals	Distributed I/O
DPRAM	Dual Ported Random Access Memory	Dual-Port Random Access Memory

Abbreviation	Derivation of abbreviation	Meaning
DQ	DRIVE-CLiQ	DRIVE-CLiQ
DRAM	Dynamic Random Access Memory	Dynamic Random Access Memory
DRIVE-CLiQ	Drive Component Link with IQ	Drive Component Link with IQ
DSC	Dynamic Servo Control	Dynamic Servo Control
DSM	Doppelsubmodul	Double submodule
DTC	Digital Time Clock	Timer
E		
EASC	External Armature Short-Circuit	External armature short-circuit
EDS	Encoder Data Set	Encoder data set
EEPROM	Electrically Erasable Programmable Read-Only Memory	Electrically Erasable Programmable Read-Only Memory
EGB	Elektrostatisch gefährdete Baugruppen	Electrostatically sensitive devices
EIP	EtherNet/IP	EtherNet Industrial Protocol (real-time Ethernet)
ELCB	Earth Leakage Circuit Breaker	Residual current operated circuit breaker
ELP	Earth Leakage Protection	Ground-fault monitoring
EMC	Electromagnetic Compatibility	Electromagnetic compatibility
EMF	Electromotive Force	Electromotive force
EMK	Elektromotorische Kraft	Electromotive force
EMV	Elektromagnetische Verträglichkeit	Electromagnetic compatibility
EN	Europäische Norm	European standard
EnDat	Encoder-Data-Interface	Encoder interface
EP	Enable Pulses	Pulse enable
EPOS	Einfachpositionierer	Basic positioner
ES	Engineering System	Engineering system
ESB	Ersatzschaltbild	Equivalent circuit diagram
ESD	Electrostatic Sensitive Devices	Electrostatically sensitive devices
ESM	Essential Service Mode	Essential service mode
ESR	Extended Stop and Retract	Extended stop and retract
F		
F...	Fault	Fault
FAQ	Frequently Asked Questions	Frequently Asked Questions
FBLOCKS	Free Blocks	Free function blocks
FCC	Function Control Chart	Function control chart
FCC	Flux Current Control	Flux current control
FD	Function Diagram	Function diagram
F-DI	Failsafe Digital Input	Fail-safe digital input
F-DO	Failsafe Digital Output	Fail-safe digital output
FEPROM	Flash-EPROM	Non-volatile write and read memory
FG	Function Generator	Function generator
FI	-	Fault current
FOC	Fiber-Optic Cable	Fiber-optic cable
FP	Funktionsplan	Function diagram
FPGA	Field Programmable Gate Array	Field Programmable Gate Array
FW	Firmware	Firmware
G		
GB	Gigabyte	Gigabyte

Abbreviation	Derivation of abbreviation	Meaning
GC	Global Control	Global control telegram (broadcast telegram)
GND	Ground	Reference potential for all signal and operating voltages, usually defined as 0 V (also referred to as M)
GSD	Gerätestammdatei	Generic Station Description: Describes the features of a PROFIBUS slave
GSV	Gate Supply Voltage	Gate supply voltage
GUID	Globally Unique Identifier	Globally Unique Identifier
H		
HF	High frequency	High frequency
HFD	Hochfrequenzdrossel	Radio frequency reactor
HLA	Hydraulic Linear Actuator	Hydraulic linear actuator
HLG	Hochlaufgeber	Ramp-function generator
HM	Hydraulic Module	Hydraulic Module
HMI	Human Machine Interface	Human Machine Interface
HTL	High-Threshold Logic	Logic with high interference threshold
HW	Hardware	Hardware
I		
i. V.	In Vorbereitung	Under development: This property is currently not available
I/O	Input/Output	Input/output
I2C	Inter-Integrated Circuit	Internal serial data bus
IASC	Internal Armature Short-Circuit	Internal armature short-circuit
IBN	Inbetriebnahme	Commissioning
ID	Identifier	Identification
IE	Industrial Ethernet	Industrial Ethernet
IEC	International Electrotechnical Commission	International Electrotechnical Commission
IF	Interface	Interface
IGBT	Insulated Gate Bipolar Transistor	Insulated gate bipolar transistor
IGCT	Integrated Gate-Controlled Thyristor	Semiconductor power switch with integrated control electrode
IL	Impulslöschung	Pulse suppression
IP	Internet Protocol	Internet Protocol
IPO	Interpolator	Interpolator
IT	Isolé Terre	Non-grounded three-phase line supply
IVP	Internal Voltage Protection	Internal voltage protection
J		
JOG	Jogging	Jogging
K		
KDV	Kreuzweiser Datenvergleich	Data cross-check
KHP	Know-how protection	Know-how protection
KIP	Kinetische Pufferung	Kinetic buffering
Kp	-	Proportional gain
KTY84-130	-	Temperature sensor
L		
L	-	Symbol for inductance
LED	Light Emitting Diode	Light emitting diode

Abbreviation	Derivation of abbreviation	Meaning
LIN	Linearmotor	Linear motor
LR	Lageregler	Position controller
LSB	Least Significant Bit	Least significant bit
LSC	Line-Side Converter	Line-side converter
LSS	Line-Side Switch	Line-side switch
LU	Length Unit	Length unit
LWL	Lichtwellenleiter	Fiber-optic cable
M		
M	-	Symbol for torque
M	Masse	Reference potential for all signal and operating voltages, usually defined as 0 V (also referred to as GND)
MB	Megabyte	Megabyte
MCC	Motion Control Chart	Motion Control Chart
MDI	Manual Data Input	Manual data input
MDS	Motor Data Set	Motor data set
MLFB	Maschinenlesbare Fabrikatebezeichnung	Machine-readable product code
MM	Motor Module	Motor Module
MMC	Man-Machine Communication	Man-machine communication
MMC	Micro Memory Card	Micro memory card
MSB	Most Significant Bit	Most significant bit
MSC	Motor-Side Converter	Motor-side converter
MSCY_C1	Master Slave Cycle Class 1	Cyclic communication between master (class 1) and slave
MSR	Motorstromrichter	Motor-side converter
MT	Messtaster	Probe
N		
N. C.	Not Connected	Not connected
N...	No Report	No report or internal message
NAMUR	Normenarbeitsgemeinschaft für Mess- und Regel-technik in der chemischen Industrie	Standardization association for measurement and control in chemical industries
NC	Normally Closed (contact)	NC contact
NC	Numerical Control	Numerical control
NEMA	National Electrical Manufacturers Association	Standardization association in USA (United States of America)
NM	Nullmarke	Zero mark
NO	Normally Open (contact)	NO contact
NSR	Netzstromrichter	Line-side converter
NTP	Network Time Protocol	Standard for synchronization of the time of day
NVRAM	Non-Volatile Random Access Memory	Non-volatile read/write memory
O		
OA	Open Architecture	Software component which provides additional functions for the SINAMICS drive system
OAIF	Open Architecture Interface	Version of the SINAMICS firmware as of which the OA application can be used
OASP	Open Architecture Support Package	Expands the commissioning tool by the corre-sponding OA application
OC	Operating Condition	Operation condition

Abbreviation	Derivation of abbreviation	Meaning
OCC	One Cable Connection	One-cable technology
OEM	Original Equipment Manufacturer	Original equipment manufacturer
OLP	Optical Link Plug	Bus connector for fiber-optic cable
OMI	Option Module Interface	Option Module Interface
P		
p...	-	Adjustable parameters
P1	Processor 1	CPU 1
P2	Processor 2	CPU 2
PB	PROFIBUS	PROFIBUS
PcCtrl	PC Control	Master control
PD	PROFIdrive	PROFIdrive
PDC	Precision Drive Control	Precision Drive Control
PDS	Power unit Data Set	Power unit data set
PDS	Power Drive System	Drive system
PE	Protective Earth	Protective ground
PELV	Protective Extra Low Voltage	Safety extra-low voltage
PFH	Probability of dangerous failure per hour	Probability of dangerous failure per hour
PG	Programmiergerät	Programming device
PI	Proportional Integral	Proportional integral
PID	Proportional Integral Differential	Proportional integral differential
PLC	Programmable Logical Controller	Programmable logic controller
PLL	Phase-Locked Loop	Phase-locked loop
PM	Power Module	Power Module
PMI	Power Module Interface	Power Module Interface
PMSM	Permanent-magnet synchronous motor	Permanent-magnet synchronous motor
PN	PROFINET	PROFINET
PNO	PROFIBUS Nutzerorganisation	PROFIBUS user organization
PPI	Point to Point Interface	Point-to-point interface
PRBS	Pseudo Random Binary Signal	White noise
PROFIBUS	Process Field Bus	Serial data bus
PS	Power Supply	Power supply
PSA	Power Stack Adapter	Power Stack Adapter
PT1000	-	Temperature sensor
PTC	Positive Temperature Coefficient	Positive temperature coefficient
PTP	Point To Point	Point-to-point
PWM	Pulse Width Modulation	Pulse width modulation
PZD	Prozessdaten	Process data
Q		
R		
r...	-	Display parameters (read-only)
RAM	Random Access Memory	Memory for reading and writing
RCCB	Residual Current Circuit Breaker	Residual current operated circuit breaker
RCD	Residual Current Device	Residual current device
RCM	Residual Current Monitor	Residual current monitor
REL	Reluctance motor textile	Reluctance motor textile
RESM	Reluctance synchronous motor	Synchronous reluctance motor

Abbreviation	Derivation of abbreviation	Meaning
RFG	Ramp-Function Generator	Ramp-function generator
RJ45	Registered Jack 45	Term for an 8-pin socket system for data transmission with shielded or non-shielded multi-wire copper cables
RKA	Rückkühlanlage	Cooling unit
RLM	Renewable Line Module	Renewable Line Module
RO	Read Only	Read only
ROM	Read-Only Memory	Read-only memory
RPDO	Receive Process Data Object	Receive Process Data Object
RS232	Recommended Standard 232	Interface standard for cable-connected serial data transmission between a sender and receiver (also known as EIA232)
RS485	Recommended Standard 485	Interface standard for a cable-connected differential, parallel, and/or serial bus system (data transmission between a number of senders and receivers, also known as EIA485)
RTC	Real Time Clock	Real-time clock
RZA	Raumzeigerapproximation	Space-vector approximation
S		
S1	-	Continuous operation
S3	-	Intermittent duty
SAM	Safe Acceleration Monitor	Safe acceleration monitoring
SBC	Safe Brake Control	Safe brake control
SBH	Sicherer Betriebshalt	Safe operating stop
SBR	Safe Brake Ramp	Safe brake ramp monitoring
SBT	Safe Brake Test	Safe brake test
SCA	Safe Cam	Safe cam
SCC	Safety Control Channel	Safety Control Channel
SCSE	Single Channel Safety Encoder	Single-channel safety encoder
SD Card	SecureDigital Card	Secure digital memory card
SDC	Standard Drive Control	Standard Drive Control
SDI	Safe Direction	Safe motion direction
SE	Sicherer Software-Endschalter	Safe software limit switch
SESM	Separately-excited synchronous motor	Separately excited synchronous motor
SG	Sicher reduzierte Geschwindigkeit	Safely limited speed
SGA	Sicherheitsgerichteter Ausgang	Safety-related output
SGE	Sicherheitsgerichteter Eingang	Safety-related input
SH	Sicherer Halt	Safe stop
SI	Safety Integrated	Safety Integrated
SIC	Safety Info Channel	Safety Info Channel
SIL	Safety Integrity Level	Safety Integrity Level
SITOP	-	Siemens power supply system
SLA	Safely-Limited Acceleration	Safely limited acceleration
SLM	Smart Line Module	Smart Line Module
SLP	Safely-Limited Position	Safely Limited Position
SLS	Safely-Limited Speed	Safely limited speed
SLVC	Sensorless Vector Control	Sensorless vector control

Abbreviation	Derivation of abbreviation	Meaning
SM	Sensor Module	Sensor Module
SMC	Sensor Module Cabinet	Sensor Module Cabinet
SME	Sensor Module External	Sensor Module External
SMI	SINAMICS Sensor Module Integrated	SINAMICS Sensor Module Integrated
SMM	Single Motor Module	Single Motor Module
SN	Sicherer Software-Nocken	Safe software cam
SOS	Safe Operating Stop	Safe operating stop
SP	Service Pack	Service pack
SP	Safe Position	Safe position
SPC	Setpoint Channel	Setpoint channel
SPI	Serial Peripheral Interface	Serial peripheral interface
SPS	Speicherprogrammierbare Steuerung	Programmable logic controller
SS1	Safe Stop 1	Safe Stop 1 (time-monitored, ramp-monitored)
SS1E	Safe Stop 1 External	Safe Stop 1 with external stop
SS2	Safe Stop 2	Safe Stop 2
SS2E	Safe Stop 2 External	Safe Stop 2 with external stop
SSI	Synchronous Serial Interface	Synchronous serial interface
SSL	Secure Sockets Layer	Encryption protocol for secure data transfer (new TLS)
SSM	Safe Speed Monitor	Safe feedback from speed monitor
SSP	SINAMICS Support Package	SINAMICS support package
STO	Safe Torque Off	Safe torque off
STW	Steuerwort	Control word
T		
TB	Terminal Board	Terminal Board
TEC	Technology Extension	Software component which is installed as an additional technology package and which expands the functionality of SINAMICS (previously OA application)
TIA	Totally Integrated Automation	Totally Integrated Automation
TLS	Transport Layer Security	Encryption protocol for secure data transfer (previously SSL)
TM	Terminal Module	Terminal Module
TN	Terre Neutre	Grounded three-phase line supply
Tn	-	Integral time
TPDO	Transmit Process Data Object	Transmit Process Data Object
TSN	Time-Sensitive Networking	Time-Sensitive Networking
TT	Terre Terre	Grounded three-phase line supply
TTL	Transistor-Transistor-Logic	Transistor-transistor logic
Tv	-	Rate time
U		
UL	Underwriters Laboratories Inc.	Underwriters Laboratories Inc.
UPS	Uninterruptible Power Supply	Uninterruptible power supply
USV	Unterbrechungsfreie Stromversorgung	Uninterruptible power supply
UTC	Universal Time Coordinated	Universal time coordinated
V		
VC	Vector Control	Vector control

Abbreviation	Derivation of abbreviation	Meaning
Vdc	-	DC link voltage
VdcN	-	Partial DC link voltage negative
VdcP	-	Partial DC link voltage positive
VDE	Verband Deutscher Elektrotechniker	Verband Deutscher Elektrotechniker [Association of German Electrical Engineers]
VDI	Verein Deutscher Ingenieure	Verein Deutscher Ingenieure [Association of German Engineers]
VPM	Voltage Protection Module	Voltage Protection Module
Vpp	Volt peak to peak	Volt peak to peak
VSM	Voltage Sensing Module	Voltage Sensing Module
W		
WEA	Wiedereinschaltautomatik	Automatic restart
WZM	Werkzeugmaschine	Machine tool
X		
XML	Extensible Markup Language	Extensible markup language (standard language for Web publishing and document management)
Y		
Z		
ZK	Zwischenkreis	DC link
ZM	Zero Mark	Zero mark
ZSW	Zustandswort	Status word

A.3 Parameter macros

Parameter macro p0015 = S150 cabinet unit

This macro is used to make default settings for operating the cabinet unit.

Table A- 1 Parameter macro p0015 = S150 cabinet unit

Sink			Source		
Parameters	**Description**	**DO**	**Parameters**	**Description**	**DO**
p0500	Technology application	Vector	0	Standard drive	Vector
p0600	Motor temperature sensor for monitoring	Vector	0	No sensor	Vector
p0601	Motor temperature sensor type	Vector	0	No sensor	Vector
p0603	CI: Motor temperature	Vector	r4105	Sensor on TM31	TM31
p0604	Motor overtemperature alarm threshold	Vector	120	120 °C	Vector
p0605	Motor overtemperature fault threshold	Vector	155	155 °C	Vector
p0606	Motor overtemperature timer	Vector	0	0 s	Vector
p0610	Response to motor overtemperature condition	Vector	12	Messages, no reduction of I_max, temperature saved	Vector
p0700[0]	Macro binector input (BI)	Vector	70005	PROFIdrive	Vector
p0857	Power unit monitoring time	Vector	30000	30 s	Vector
p0864	BI: Infeed operation	Vector	r0863.0	Drive link - open-loop control	A_INF
p1000[0]	Macro connector inputs (CI) for speed setpoints	Vector	100001	PROFIdrive	Vector
p1001	CO: Fixed speed setpoint 1	Vector	300	300 rpm	Vector
p1002	CO: Fixed speed setpoint 2	Vector	600	600 rpm	Vector
p1003	CO: Fixed speed setpoint 3	Vector	1500	1500 rpm	Vector
p1083	CO: Speed limit in positive direction of rotation	Vector	6000	6000 rpm	Vector
p1086	CO: Speed limit in negative direction of rotation	Vector	-6000	-6000 rpm	Vector
p1115	Ramp-function generator selection	Vector	1	Extended ramp-function generator	Vector
p1120	Ramp-function generator ramp-up time	Vector	20	20 s	Vector
p1121	Ramp-function generator ramp-down time	Vector	30	30 s	Vector
p1135	OFF3 ramp-down time	Vector	10	10 s	Vector
p1200	Flying restart operating mode	Vector	0	Flying restart not active	Vector
p1208.0	BI: WEA infeed fault	Vector	r2139.3	Fault active	A_INF
p1208.1	BI: WEA infeed supply break	Vector	r0863.2	Drive link - infeed supply break	A_INF
p1240	Vdc controller configuration	Vector	0	Disable Vdc-max controller	Vector
p1254	Vdc controller automatic ON level detection	Vector	1	Automatic detection enabled	Vector
p1280	Vdc controller configuration (V/f)	Vector	0	Disable Vdc-max controller	Vector
p1300	Open-loop/closed-loop control operating mode	Vector	20	Encoderless speed control	Vector

Sink			Source		
Parameters	Description	DO	Parameters	Description	DO
p1911	Number of phases to be identified	Vector	1	1 phase	Vector
p2051[0]	CI: PROFIBUS PZD send word	Vector	r2089[0]	ZSW1	Vector
p2051[1]	CI: PROFIBUS PZD send word	Vector	r0063[0]	n-act unsmoothed	Vector
p2051[2]	CI: PROFIBUS PZD send word	Vector	r0068[0]	I-act unsmoothed	Vector
p2051[3]	CI: PROFIBUS PZD send word	Vector	r0080[0]	M-act unsmoothed	Vector
p2051[4]	CI: PROFIBUS PZD send word	Vector	r0082[0]	P-act unsmoothed	Vector
p2051[5]	CI: PROFIBUS PZD send word	Vector	r2131	FAULT	Vector
p2080[0]	BI: PROFIBUS send status word 1	Vector	r0899.0	Ready for switching on	Vector
p2080[1]	BI: PROFIBUS send status word 1	Vector	r0899.1	Ready for operation	Vector
p2080[2]	BI: PROFIBUS send status word 1	Vector	r0899.2	Operation	Vector
p2080[3]	BI: PROFIBUS send status word 1	Vector	r2139.3	Fault	Vector
p2080[4]	BI: PROFIBUS send status word 1	Vector	r0899.4	No OFF2	Vector
p2080[5]	BI: PROFIBUS send status word 1	Vector	r0899.5	No OFF3	Vector
p2080[6]	BI: PROFIBUS send status word 1	Vector	r0899.6	Switching on inhibited	Vector
p2080[7]	BI: PROFIBUS send status word 1	Vector	r2139.7	Alarm active	Vector
p2080[8]	BI: PROFIBUS send status word 1	Vector	r2197.7	No setpoint/actual value deviation	Vector
p2080[9]	BI: PROFIBUS send status word 1	Vector	r0899.9	Control request	Vector
p2080[10]	BI: PROFIBUS send status word 1	Vector	r2199.1	Comparison value reached	Vector
p2080[11]	BI: PROFIBUS send status word 1	Vector	r1407.7	M/I/P limiting not active	Vector
p2080[12]	BI: PROFIBUS send status word 1	Vector	0		Vector
p2080[13]	BI: PROFIBUS send status word 1	Vector	r2129.14	No alarm for motor overtempera-ture	Vector
p2080[14]	BI: PROFIBUS send status word 1	Vector	r2197.3	Clockwise	Vector
p2080[15]	BI: PROFIBUS send status word 1	Vector	r2129.15	No Therm. alarm Power unit over-load	Vector
p2088	PROFIBUS Invert status word	Vector	B800h		Vector
p2128[14]	Select fault/alarm code for trigger	Vector	7910	A7910: Alarm, motor overtemper-ature	Vector
p2128[15]	Select fault/alarm code for trigger	Vector	5000	A5000: Therm. alarm Power unit overload	Vector
p2153	Time constant revolutions actual value filter	Vector	20	20 ms	Vector
p0840[0]	ON/OFF 1	A_INF	r0863.1	Energize line contactor	Vector
p2105	BI: 3. Acknowledge faults	A_INF	r1214.3	Automatic restart status – set acknowledgement command	Vector
p1207	BI: WEA link, following DO	A_INF	r1214.2	Automatic restart status – restart active	Vector
p4053[0]	TM31 analog inputs, smoothing time constant	TM31	0	0 ms	TM31
p4053[1]	TM31 analog inputs, smoothing time constant	TM31	0	0 ms	TM31
p4056[0]	Type of analog inputs	TM31	2	Current 0 ... 20 mA	TM31
p4056[1]	Type of analog inputs	TM31	2	Current 0 ... 20 mA	TM31
p4076[0]	Type of analog outputs	TM31	0	Current 0 ... 20 mA	TM31
p4076[1]	Type of analog outputs	TM31	0	Current 0 ... 20 mA	TM31
p4071[0]	Signal analog output 0	TM31	r0063	Actual speed value smoothed	Vector
p4071[1]	Signal analog output 1	TM31	r0068	Absolute current actual value	Vector

Sink			Source		
Parameters	**Description**	**DO**	**Parameters**	**Description**	**DO**
p4100	Type of temperature sensor	TM31	0	Evaluation disabled	TM31
p4102[0]	Alarm threshold, temperature sensing	TM31	251 °C	When this value is exceeded, alarm A35211 is triggered.	TM31
p4102[1]	Fault threshold for temperature sensing	TM31	251 °C	When this value is exceeded, fault F35207 is triggered.	TM31

Parameter macro p0700 = 5: PROFIdrive (70005)

This macro is used to set the PROFIdrive interface as the default command source.

Table A- 2 Parameter macro p0700 = 5: PROFIdrive

Sink			Source		
Parameters	**Description**	**DO**	**Parameters**	**Description**	**DO**
p0840[0]	ON/OFF1	Vector	r2090.0	PZD 1 bit 0	Vector
p0844[0]	No OFF2_1	Vector	r2090.1	PZD 1 bit 1	Vector
p0845[0]	No OFF2_2	Vector	r0722.3	CU DI3	CU
p0848[0]	No OFF3_1	Vector	r2090.2	PZD 1 bit 2	Vector
p0849[0]	No OFF3_2	Vector	r0722.2	CU DI2	CU
p0806	Inhibit LOCAL mode	Vector	0		Vector
p0810	Changeover CDS bit 0	Vector	0		Vector
p0852	Enable operation	Vector	r2090.3	PZD 1 bit 3	Vector
p0854	Control request	Vector	r2090.10	PZD 1 bit 10	Vector
p0922	PROFIdrive PZD telegram selection	Vector	999	Free telegram configuration	
p1020	FSW bit 0	Vector	0		Vector
p1021	FSW bit 1	Vector	0		Vector
p1035	MOP raise	Vector	r2090.13	PZD 1 bit 13	Vector
p1036	MOP lower	Vector	r2090.14	PZD 1 bit 14	Vector
p1113	Setpoint inversion	Vector	r2090.11	PZD 1 bit 11	Vector
p1140	Enable RFG	Vector	r2090.4	PZD 1 bit 4	Vector
p1141	Continue RFG	Vector	r2090.5	PZD 1 bit 5	Vector
p1142	Enable nsetp	Vector	r2090.6	PZD 1 bit 6	Vector
p2103	Acknowledge fault 1	Vector	r2090.7	PZD 1 bit 7	Vector
p2104	Acknowledge fault 2	Vector	r4022.3	TM31 DI3	TM31
p2106	Ext. fault_1	Vector	r0722.1	CU DI1	CU
p2107	Ext. fault_2	Vector	1		Vector
p2112	Ext. alarm_1	Vector	r0722.0	CU DI0	CU
p2116	Ext. alarm_2	Vector	1		Vector
p0738	DI/DO8	CU	1	+24 V	CU
p0748.8	Invert DI/DO8	CU	0	Not inverted	
p0728.8	Set DI/DO8 input or output	CU	1	Output	
p0739	DI/DO9	CU	1	+24 V	CU
p0748.9	Invert DI/DO9	CU	0	Not inverted	
p0728.9	Set DI/DO9 input or output	CU	1	Output	
p0740	DI/DO10	CU	1	+24 V	CU

Sink			Source		
Parameters	**Description**	**DO**	**Parameters**	**Description**	**DO**
p0748.10	Invert DI/DO10	CU	0	Not inverted	
p0728.10	Set DI/DO10 input or output	CU	1	Output	
p0741	DI/DO11	CU	1	+24 V	CU
p0748.11	Invert DI/DO11	CU	0	Not inverted	
p0728.11	Set DI/DO11 input or output	CU	1	Output	
p0742	DI/DO12	CU	1	+24 V	CU
p0748.12	Invert DI/DO12	CU	0	Not inverted	
p0728.12	Set DI/DO12 input or output	CU	1	Output	
p0743	DI/DO13	CU	r0899.6	Switching on inhibited	Vector
p0748.13	Invert DI/DO13	CU	1	Inverted	
p0728.13	Set DI/DO13 input or output	CU	1	Output	
p0744	DI/DO14	CU	1	+24 V	CU
p0748.14	Invert DI/DO14	CU	0	Not inverted	
p0728.14	Set DI/DO14 input or output	CU	1	Output	
p0745	DI/DO15	CU	r2138.7	Ack. fault	Vector
p0748.15	Invert DI/DO15	CU	0	Not inverted	
p0728.15	Set DI/DO15 input or output	CU	1	Output	
p2103	Acknowledge fault 1	TM31	r2090.7	PZD 1 bit 7	Vector
p2104	Acknowledge fault 2	TM31	r4022.3	TM31 DI3	TM31
p4030	DO0	TM31	r0899.11	Pulses enabled	Vector
p4031	DO1	TM31	r2139.3	Fault	Vector
p4048.1	Invert DO1	TM31	1	Inverted	
p4038	DO8	TM31	r0899.0	Ready for switching on	Vector
p4028.8	Set DI/DO8 input or output	TM31	1	Output	
p4039	DO9	TM31	0		TM31
p4028.9	Set DI/DO9 input or output	TM31	0	Input	
p4040	DO10	TM31	0		TM31
p4028.10	Set DI/DO10 input or output	TM31	0	Input	
p4041	DO11	TM31	0		TM31
p4028.11	Set DI/DO11 input or output	TM31	0	Input	

Parameter macro p0700 = 6: Terminal block TM31 (70006)

This macro is used to set customer terminal block TM31 as the command source.

Table A- 3 Parameter macro p0700 = 6: Terminal block TM31

Sink			Source		
Parameter	**Description**	**DO**	**Parameter**	**Description**	**DO**
p0840[0]	ON/OFF1	Vector	r4022.0	TM31 DI0	TM31
p0844[0]	No OFF2_1	Vector	1		CU
p0845[0]	No OFF2_2	Vector	r0722.3	CU DI3	CU
p0848[0]	No OFF3_1	Vector	1		Vector
p0849[0]	No OFF3_2	Vector	r0722.2	CU DI2	CU
p0806	Inhibit LOCAL mode	Vector	0		Vector
p0810	Changeover CDS bit 0	Vector	0		Vector
p0852	Enable operation	Vector	r4022.4	TM31 DI4	TM31
p0854	Control request	Vector	1		Vector
p0922	PROFIdrive PZD telegram selection	Vector	999	Free telegram configuration	
p1020	FSW bit 0	Vector	r4022.1	TM31 DI1	TM31
p1021	FSW bit 1	Vector	r4022.2	TM31 DI2	TM31
p1035	MOP raise	Vector	r4022.1	TM31 DI1	TM31
p1036	MOP lower	Vector	r4022.2	TM31 DI2	TM31
p1113	Direction of rotation reversal	Vector	0		TM31
p1140	Enable RFG	Vector	1		Vector
p1141	Start RFG	Vector	1		Vector
p1142	Enable nsetp	Vector	1		Vector
p2103	Acknowledge fault 1	Vector	0		Vector
p2104	Acknowledge fault 2	Vector	r4022.3	TM31 DI3	TM31
p2106	Ext. fault_1	Vector	r0722.1	CU DI1	CU
p2107	Ext. fault_2	Vector	1		Vector
p2112	Ext. alarm_1	Vector	r0722.0	CU DI0	CU
p2116	Ext. alarm_2	Vector	1		Vector
p0738	DI/DO8	CU	1	+24 V	CU
p0748.8	Invert DI/DO8	CU	0	Not inverted	
p0728.8	Set DI/DO8 input or output	CU	1	Output	
p0739	DI/DO9	CU	1	+24 V	CU
p0748.9	Invert DI/DO9	CU	0	Not inverted	
p0728.9	Set DI/DO9 input or output	CU	1	Output	
p0740	DI/DO10	CU	1	+24 V	CU
p0748.10	Invert DI/DO10	CU	0	Not inverted	
p0728.10	Set DI/DO10 input or output	CU	1	Output	
p0741	DI/DO11	CU	1	+24 V	CU
p0748.11	Invert DI/DO11	CU	0	Not inverted	
p0728.11	Set DI/DO11 input or output	CU	1	Output	
p0742	DI/DO12	CU	1	+24 V	CU
p0748.12	Invert DI/DO12	CU	0	Not inverted	
p0728.12	Set DI/DO12 input or output	CU	1	Output	

Sink			Source		
Parameter	**Description**	**DO**	**Parameter**	**Description**	**DO**
p0743	DI/DO13	CU	r0899.6	Power-on inhibit active	Vector
p0748.13	Invert DI/DO13	CU	1	Inverted	
p0728.13	Set DI/DO13 input or output	CU	1	Output	
p0744	DI/DO14	CU	1	+24 V	CU
p0748.14	Invert DI/DO14	CU	0	Not inverted	
p0728.14	Set DI/DO14 input or output	CU	1	Output	
p0745	DI/DO15	CU	r2138.7	Ackn fault	Vector
p0748.15	Invert DI/DO15	CU	0	Not inverted	
p0728.15	Set DI/DO15 input or output	CU	1	Output	
p2103	Acknowledge fault 1	TM31	0		TM31
p2104	Acknowledge fault 2	TM31	r4022.3	TM31 DI3	TM31
p4030	DO0	TM31	r0899.11	Pulses enabled	Vector
p4031	DO1	TM31	r2139.3	Fault	Vector
p4048.1	Invert DO1	TM31	1	Inverted	
p4038	DO8	TM31	r0899.0	Ready to start	Vector
p4028.8	Set DI/DO8 input or output	TM31	1	Output	
p4039	DO9	TM31	0		TM31
p4028.9	Set DI/DO9 input or output	TM31	0	Input	
p4040	DO10	TM31	0		TM31
p4028.10	Set DI/DO10 input or output	TM31	0	Input	
p4041	DO11	TM31	0		TM31
p4028.11	Set DI/DO11 input or output	TM31	0	Input	

Parameter macro p0700 = 7: NAMUR (70007)

This macro is used to set the NAMUR terminal block as the default command source.

Table A- 4 Parameter macro p0700 = 7: NAMUR

Sink			Source		
Parameter	**Description**	**DO**	**Parameter**	**Description**	**DO**
p0840[0]	ON/OFF1	Vector	r4022.0	TM31 DI0	TM31
p0844[0]	No OFF2_1	Vector	r4022.4	TM31 DI4	TM31
p0845[0]	No OFF2_2	Vector	r0722.3	CU DI3	CU
p0848[0]	No OFF3_1	Vector	r4022.5	TM31 DI5	TM31
p0849[0]	No OFF3_2	Vector	1		Vector
p0806	Inhibit LOCAL mode	Vector	0		Vector
p0810	Changeover CDS bit 0	Vector	0		Vector
p0852	Enable operation	Vector	1		Vector
p0854	Control request	Vector	1		Vector
p0922	PROFIdrive PZD telegram selection	Vector	999	Free telegram configuration	
p1020	FSW bit 0	Vector	r4022.1	TM31 DI1	TM31
p1021	FSW bit 1	Vector	r4022.2	TM31 DI2	TM31
p1035	MOP raise	Vector	r4022.1	TM31 DI1	TM31
p1036	MOP lower	Vector	r4022.2	TM31 DI2	TM31
p1113	Direction of rotation reversal	Vector	r4022.6	TM31 DI6	TM31
p1140	Enable RFG	Vector	1		Vector
p1141	Start RFG	Vector	1		Vector
p1142	Enable nsetp	Vector	1		Vector
p2103	Acknowledge fault 1	Vector	0		Vector
p2104	Acknowledge fault 2	Vector	r4022.3	TM31 DI3	TM31
p2106	Ext. fault_1	Vector	r0722.1	CU DI1	CU
p2107	Ext. fault_2	Vector	1		Vector
p2112	Ext. alarm_1	Vector	r0722.0	CU DI0	CU
p2116	Ext. alarm_2	Vector	1		Vector
p0738	DI/DO8	CU	1	+24 V	CU
p0748.8	Invert DI/DO8	CU	0	Not inverted	
p0728.8	Set DI/DO8 input or output	CU	1	Output	
p0739	DI/DO9	CU	1	+24 V	CU
p0748.9	Invert DI/DO9	CU	0	Not inverted	
p0728.9	Set DI/DO9 input or output	CU	1	Output	
p0740	DI/DO10	CU	1	+24 V	CU
p0748.10	Invert DI/DO10	CU	0	Not inverted	
p0728.10	Set DI/DO10 input or output	CU	1	Output	
p0741	DI/DO11	CU	1	+24 V	CU
p0748.11	Invert DI/DO11	CU	0	Not inverted	
p0728.11	Set DI/DO11 input or output	CU	1	Output	
p0742	DI/DO12	CU	1	+24 V	CU
p0748.12	Invert DI/DO12	CU	0	Not inverted	
p0728.12	Set DI/DO12 input or output	CU	1	Output	

Sink			Source		
Parameter	**Description**	**DO**	**Parameter**	**Description**	**DO**
p0743	DI/DO13	CU	r0899.6	Power-on inhibit active	Vector
p0748.13	Invert DI/DO13	CU	1	Inverted	
p0728.13	Set DI/DO13 input or output	CU	1	Output	
p0744	DI/DO14	CU	1	+24 V	CU
p0748.14	Invert DI/DO14	CU	0	Not inverted	
p0728.14	Set DI/DO14 input or output	CU	1	Output	
p0745	DI/DO15	CU	r2138.7	Ackn fault	Vector
p0748.15	Invert DI/DO15	CU	0	Not inverted	
p0728.15	Set DI/DO15 input or output	CU	1	Output	
p2103	Acknowledge fault 1	TM31	0		TM31
p2104	Acknowledge fault 2	TM31	r4022.3	TM31 DI3	TM31
p4030	DO0	TM31	r0899.11	Pulses enabled	Vector
p4031	DO1	TM31	r2139.3	Fault	Vector
p4048.1	Invert DO1	TM31	1	Inverted	
p4038	DO8	TM31	r0899.0	Ready to start	Vector
p4028.8	Set DI/DO8 input or output	TM31	1	Output	
p4039	DO9	TM31	0		TM31
p4028.9	Set DI/DO9 input or output	TM31	0	Input	
p4040	DO10	TM31	0		TM31
p4028.10	Set DI/DO10 input or output	TM31	0	Input	
p4041	DO11	TM31	0		TM31
p4028.11	Set DI/DO11 input or output	TM31	0	Input	

Parameter macro p0700 = 10: PROFIdrive NAMUR (70010)

This macro is used to set the PROFIdrive NAMUR interface as the default command source.

Table A- 5 Parameter macro p0700 = 10: PROFIdrive NAMUR

Sink			Source		
Parameters	**Description**	**DO**	**Parameters**	**Description**	**DO**
p0840[0]	ON/OFF1	Vector	0	Assignment with p0922 = 20	Vector
p0844[0]	No OFF2_1	Vector	1	Assignment with p0922 = 20	Vector
p0845[0]	No OFF2_2	Vector	r0722.3	CU DI3	CU
p0848[0]	No OFF3_1	Vector	0	Assignment with p0922 = 20	Vector
p0849[0]	No OFF3_2	Vector	1		Vector
p0806	Inhibit LOCAL mode	Vector	0		Vector
p0810	Changeover CDS bit 0	Vector	0		Vector
p0852	Enable operation	Vector	1	Assignment with p0922 = 20	Vector
p0854	Control request	Vector	1	Assignment with p0922 = 20	Vector
p0922	PROFIdrive PZD telegram selection	Vector	20	PROFIdrive NAMUR	
p1020	FSW bit 0	Vector	0		Vector
p1021	FSW bit 1	Vector	0		Vector
p1035	MOP raise	Vector	0		Vector
p1036	MOP lower	Vector	0		Vector
p1113	Direction of rotation reversal	Vector	0	Assignment with p0922 = 20	Vector
p1140	Enable RFG	Vector	1	Assignment with p0922 = 20	Vector
p1141	Start RFG	Vector	1	Assignment with p0922 = 20	Vector
p1142	Enable nsetp	Vector	1	Assignment with p0922 = 20	Vector
p2103	Acknowledge fault_1	Vector	0	Assignment with p0922 = 20	Vector
p2104	Acknowledge faults_2	Vector	0		Vector
p2106	Ext. fault_1	Vector	r0722.1	CU DI1	CU
p2107	Ext. fault_2	Vector	1		Vector
p2112	Ext. alarm_1	Vector	r0722.0	CU DI0	CU
p2116	Ext. alarm_2	Vector	1		Vector
p0738	DI/DO8	CU	1	+24 V	CU
p0748.8	Invert DI/DO8	CU	0	Not inverted	
p0728.8	Set DI/DO8 input or output	CU	1	Output	
p0739	DI/DO9	CU	1	+24 V	CU
p0748.9	Invert DI/DO9	CU	0	Not inverted	
p0728.9	Set DI/DO9 input or output	CU	1	Output	
p0740	DI/DO10	CU	1	+24 V	CU
p0748.10	Invert DI/DO10	CU	0	Not inverted	
p0728.10	Set DI/DO10 input or output	CU	1	Output	
p0741	DI/DO11	CU	1	+24 V	CU
p0748.11	Invert DI/DO11	CU	0	Not inverted	
p0728.11	Set DI/DO11 input or output	CU	1	Output	
p0742	DI/DO12	CU	1	+24 V	CU
p0748.12	Invert DI/DO12	CU	0	Not inverted	
p0728.12	Set DI/DO12 input or output	CU	1	Output	

Sink			Source		
Parameters	**Description**	**DO**	**Parameters**	**Description**	**DO**
p0743	DI/DO13	CU	r0899.6	Switching on inhibited	Vector
p0748.13	Invert DI/DO13	CU	1	Inverted	
p0728.13	Set DI/DO13 input or output	CU	1	Output	
p0744	DI/DO14	CU	1	+24 V	CU
p0748.14	Invert DI/DO14	CU	0	Not inverted	
p0728.14	Set DI/DO14 input or output	CU	1	Output	
p0745	DI/DO15	CU	r2138.7	Ack. fault	Vector
p0748.15	Invert DI/DO15	CU	0	Not inverted	
p0728.15	Set DI/DO15 input or output	CU	1	Output	
p2103	Acknowledge fault 1	TM31	0		TM31
p2104	Acknowledge fault 2	TM31	0		TM31
p4030	DO0	TM31	0		Vector
p4031	DO1	TM31	0		Vector
p4038	DO8	TM31	0		Vector
p4028.8	Set DI/DO8 input or output	TM31	0	Input	
p4039	DO9	TM31	0		TM31
p4028.9	Set DI/DO9 input or output	TM31	0	Input	
p4040	DO10	TM31	0		TM31
p4028.10	Set DI/DO10 input or output	TM31	0	Input	
p4041	DO11	TM31	0		TM31
p4028.11	Set DI/DO11 input or output	TM31	0	Input	

Parameter macro p1000 = 1: PROFIdrive (100001)

This macro is used to set the default setpoint source via PROFIdrive.

Table A- 6 Parameter macro p1000 = 1: PROFIdrive

Sink			Source		
Parameter	**Description**	**DO**	**Parameter**	**Description**	**DO**
p1070	Main setpoint	Vector	r2050[1]	PROFIdrive PZD2	Vector
p1071	Main setpoint scaling	Vector	1	100 %	Vector
p1075	Supplementary setpoint	Vector	0		Vector
p1076	Supplementary setpoint scaling	Vector	1	100 %	Vector

Parameter macro p1000 = 2: TM31 terminals (100002)

This macro is used to set analog input 0 on customer terminal block TM31 as the setpoint source.

Table A- 7 Parameter macro p1000 = 2: TM31 terminals

Sink			Source		
Parameter	**Description**	**DO**	**Parameter**	**Description**	**DO**
p1070	Main setpoint	Vector	r4055	AI0 TM31	TM31
p1071	Main setpoint scaling	Vector	1	100 %	Vector
p1075	Supplementary setpoint	Vector	0		Vector
p1076	Supplementary setpoint scaling	Vector	1	100 %	Vector

Parameter macro p1000 = 3: Motorized potentiometer (100003)

This macro is used to set the motorized potentiometer as the setpoint source.

Table A- 8 Parameter macro p1000 = 3: Motorized potentiometer

Sink			Source		
Parameter	**Description**	**DO**	**Parameter**	**Description**	**DO**
p1070	Main setpoint	Vector	r1050	Motorized potentiometer	Vector
p1071	Main setpoint scaling	Vector	1	100 %	Vector
p1075	Supplementary setpoint	Vector	0		Vector
p1076	Supplementary setpoint scaling	Vector	1	100 %	Vector

Parameter macro p1000 = 4: Fixed setpoint (100004)

This macro is used to set the fixed setpoint as the setpoint source.

Table A- 9 Parameter macro p1000 = 4: Fixed setpoint

Sink			Source		
Parameter	**Description**	**DO**	**Parameter**	**Description**	**DO**
p1070	Main setpoint	Vector	r1024	Active fixed setpoint	Vector
p1071	Main setpoint scaling	Vector	1	100 %	Vector
p1075	Supplementary setpoint	Vector	0		Vector
p1076	Supplementary setpoint scaling	Vector	1	100 %	Vector

Index

"

"Siemens Industry Online Support" App, 5

2

230 V AC auxiliary supply, 91

3

3-mass model, 742

A

A7850 – External alarm 1, 767
Accessory kit
    Original roof screws, 52
Acknowledging faults at the AOP, 339
Active phase failure detection, 728
Actual speed value filter, 492
Acyclic communication, 353
    Determining drive object numbers, 361
    Error values in parameter responses, 358
    Parameter request and parameter response, 355
    Parameter request and response, 356
Additional customer terminal block TM31 (option G61), 192
Additional SMC30 Sensor Module (option K52), 191
Adjustable hardware filter, 626
Alarms, 767
Analog inputs, 114, 312
Analog outputs, 115, 518
AOP
    Setpoint ramp-down time, 338
    Setpoint ramp-up time, 338
    Starting setpoint, 338
AOP setpoint, 338
AOP30, 270
Application classes, 346
Armature short-circuit braking
    external, 565
    Internal, 567
Assembly
    Line connection from above, 62
    Motor connection from above, 62
Assigning the SINAMICS password
    Web server, 621
Automatic restart, 549
Automatic speed controller optimization, 531
Auxiliary supply, 91
Auxiliary Voltage, 116

B

B00, 218
B02, 220
B03, 220
Bandstop filters for the active infeed, 727
Basic commissioning
    Enter the motor data, 275
    Entering the basic parameters, 279
    Entering the encoder data, 276
    Motor identification, 281
    Selecting the motor type, 275
Basic information
    BICO technology, 297
    Binector input (BI), 298
    Binector output (BO), 298
    Command data set (CDS), 292
    Connector input (CI), 298
    Connector output (CO), 298
    Copy motor data set (MDS), 296
    Copying the command data set (CDS), 296
    Copying the drive data set (DDS), 296
    Data sets, 291
    Drive data set (DDS), 293
    Drive objects, 290
    Encoder data set (EDS), 294
    Interconnecting signals, 299
    Motor data set (MDS), 295
    Parameter categorization, 288
    Parameter types, 287
    Parameters, 287
Basic information about the drive system, 287
Basic positioner, 684
    Absolute encoder adjustment, 696
    Direct setpoint input (MDI), 721
    Flying referencing, 703
    Hardware limit switch, 690
    Jerk limit, 692
    Jog, 724
    Limitations, 688
    Limiting the traversing range, 690

Maximum acceleration, 689
Maximum delay, 689
Maximum velocity, 689
Mechanical system, 686
Reference point approach, 699
Referencing, 695
Referencing with several zero marks per revolution, 706
Set reference point, 695
Software limit switch, 690
Starting against a closed brake, 693
Status signals, 724
STOP cam, 690
Traversing blocks, 712
Traversing to fixed stop, 718
BICO technology, 297
Interconnecting signals, 299
Bimetallic NC contact, 738
Binector input (BI), 298
Binector output (BO), 298
Blocking protection, 733
brake control
Extended, 655
Simple, 583
Braking unit 25 kW (option L61/L64), 144
Braking unit 50 kW (option L62/L65), 144
Bypass
Bypass with synchronizer with degree of overlapping, 647
Bypass with synchronizer without degree of overlapping, 650
Without synchronization, 652
Bypass function, 645

C

Cabinet anti-condensation heating (option L55), 140
Cabinet lighting with service socket (option L50), 139
Cable and screw terminals, 773
Cable lengths, 78
Cable lugs, 77
2 cable lugs per phase, 78
Back-to-back, 78
CAN bus, 159
CBC10, 159
CBC10 Communication Board
CAN bus, 159
CBE20, 162
CDS (command data set), 292
Copy, 296
CDS changeover via AOP, 339
Center of gravity of the cabinet, 51
Certifications, 6
Changing the language, 335
Changing the SINAMICS password
Web server, 621
Checklist
Electrical installation, 65
Mechanical installation, 44
Circuit breaker, 89
Cleaning, 772
Closed-loop position control, 668
Closed-loop torque control, 506
Command data set, 292
Command sources
General information, 286
NAMUR, 308
PROFIdrive, 304
PROFIdrive NAMUR, 310
TM31 terminals, 306
Communication
Communication services, 458
I&M, 413
Used port numbers, 458
via EtherNet/IP, 428
via Modbus TCP, 444
via PROFIBUS, 379
via PROFIdrive, 344
via PROFINET, 393
via SINAMICS Link, 415
Communication Board Ethernet CBE20 (option G33), 162
Communication interfaces
Parallel operation, 460
Connecting transport units, 53
Connection cross-sections, 78
Connection for External Auxiliary Equipment (Option L19), 133
Connector input (CI), 298
Connector output (CO), 298
Control Interface Module
Frame size FX, replacement, 778
Frame size GX, replacement, 780
Frame size HX, replacement, 782
Frame size JX, replacement, 784
Control Unit CU320-2 DP, 92, 93
Control Unit CU320-2 PN, 206
Control via PROFIBUS, 382
Crane transport aids, 51
Removal, 52
CU320-2 DP, 93
CU320-2 PN, 206
CU320-2 PN Control Unit, 206
Current controller adaptation, 511

Current setpoint filters, 510
Customer terminal block, 109
Customer terminal block TM31 (option G60), 191
Cyclic communication, 348

D

Data matrix code, 36
Data sets, 291
Data transfer
    PROFINET, 400
Date of manufacture, 37
DC braking, 568
DC fuses
    Frame size HX, replacement, 814
    Frame size JX, replacement, 817
DCC, 30, 464
DCP flashing, 399
DDS (drive data set), 293
    Copy, 296
Declaration of conformity
    EMC directive, 6
    Machinery directive, 6
Decrease Key, 337
Deleting the SINAMICS password
    Web server, 622
Derating behavior at increased pulse frequency, 574
Derating data, 831
    Current derating as a function of the pulse frequency, 834
    Installation altitudes between 2000 m and 5000 m above sea level, 832
    Permissible output current as a function of the ambient temperature, 831
    Reduce the ambient temperature and the output current, 832
    Using an isolating transformer, 833
Determining drive object numbers, 361
Determinism, 394
Diagnostics, 752
    LEDs, 752
    Parameter, 762
Diagnostics channels, 367
Digital inputs, 112, 113
Digital inputs/outputs, 97, 99, 117, 210, 212
Digital outputs, 522
Direction of motor rotation, 81
Direction reversal, 467, 580
Disconnect the basic interference suppression module, 84
Disposal, 859
Downloading the firmware (operator panel), 827
Drive Control Chart, 464
Drive Control Chart (DCC), 30
Drive data set, 293
Drive objects, 290, 290
DRIVE-CLiQ interface, 96, 209
Droop Function, 503
du/dt filter plus Voltage Peak Limiter (option L10), 127
dv/dt filter compact plus Voltage Peak Limiter (Option L07), 123

E

Edge evaluation of the zero mark, 627
EDS (encoder data set), 294
Efficiency optimization, 539
    Method 1, 540
    Method 2, 541
EIP, 428
Electrical installation
    Checklist, 65
Electromagnetic compatibility
    EMC compliant design, 74
    Introduction, 72
    Noise emissions, 73
    Operational reliability and noise immunity, 72
Electromagnetic fields, 21
Electrostatic sensitive devices, 25
EMERGENCY OFF category 0 (option L57), 141
EMERGENCY OFF pushbutton (option L45), 138
EMERGENCY STOP category 1 (option L59), 142
EMERGENCY STOP category 1 (option L60), 143
Encoder data set, 294
Encoder evaluation, 623
Encoder range, 637
Encoder track monitoring, 624
Encoder with gear factor, 283
Energy-saving display, 587
EPOS
    Flying referencing using Safety Integrated Functions, 711
    Safe referencing, 709
Error values in parameter responses, 358
Essential service mode, 601, 601
Ethernet interface, 164, 264
EtherNet/IP, 428
    Activating X1400 (CBE20), 430
    Activating X150 CU320-2 PN, 430
    Commissioning the drive, 429
    Connect the drive device, 429
    Create generic I/O module, 428
    Integrating the drive into an Ethernet network, 441
    Make the communication settings, 430

Extended brake control, 655
Extended monitoring functions, 660
External alarm 1, 767
External fault 1, 768
External fault 2, 768
External fault 3, 769
External supply, 91

F

F7860 – External fault 1, 768
F7861 – External fault 2, 768
F7862 – External fault 3, 769
Factory setting, 283
Fan
    Active Interface Module (frame size FI) replacement, 806
    Active Interface Module (frame size GI) replacement, 808
    Active Interface Module (frame size HI) replacement, 810
    Active Interface Module (frame size JI) replacement, 812
    Frame size FX, replacement, 796
    Frame size GX, replacement, 798
    Frame size HX, replacement, 800
    Frame size JX, replacement, 804
Fan voltage, adjustment, 81
Fast magnetization, 542
Faults, 767
Faults and alarms, 341, 767
    Forwarding, 303
    Propagation, 303
Faults and alarms, 341, 767
Features, 30
Filtermatten, Austausch, 777
Firmware update, 826
Firmware, updating, 826
Fixed setpoints, 315
Fixed speed setpoints, 315
Floor levelness, 46
Flying restart, 552
    Fast flying restart, 556
    Fast flying restart with voltage acquisition via VSM10, 557
    with encoder, 557
    without encoder, 554
Forming the DC-link capacitors, 824
Freezing the actual speed for dn/dt errors, 625
Friction characteristic curve, 563
Fuse
    Auxiliary power supply (-F11 / -F12), 819
    Fan -T1 -F10 / -T1 -F11, 819
    Fans -G1 -F10 / -T1 -F11, 819
    Fans -R2 -F101 / -T1 -F102, 819
    Internal 230 V AC supply (-F21), 819
    NH fuse, replacement, 820

G

G20, 159
G33, 162
G51, 165
G60, 191
G61, 192
G62, 193
Gear factor, 283
General Data Protection Regulation, 6
Ground fault test, 559

H

Harmonics controller, 527
High overload, 836

I

I&M, 413
I2t motor model, 740
Identification & Maintenance, 413
IF1, 460
IF2, 460
Increase Key, 337
Increasing the output frequency, 571
Indexed actual value acquisition, 671
Infeed module rated one level lower (option L04), 119
Installation
    Connection to the foundation, 53
    Lifting the cabinet off the transport pallet, 50
Installation device, 774
Installation location, 45
Insulation Monitor (Option L87), 157
IO controller, 393
IO Device, 393
IO supervisor, 393
IT system, 84

J

Jog, 337
JOG, 337

K

K01, 200
K46, 171
K48, 176
K50, 181
K51, 190
K52, 191
K82, 201
K82, Terminal Module for activating Safe Torque Off and Safe STOP 1, 201
K87, 203
K88, 204
K95, 206
Kinetic buffering, 546
Knife fuse
    Replacement, 820
Know-how protection, 592
    Activating, 595
    Changing the password, 597
    Deactivate, 596
    Load to file system, 598
    OEM exception list, 597
KTY, 738

L

L04, 119
L07, 123
L10, 127
L19, 133
L21, 135
L26, 136
L40, 137
L45, 138
L50, 139
L55, 140
L57, 141
L59, 142
L60, 143
L61, 144
L62, 144
L64, 144
L65, 144
L83, 155
L84, 155
L86, 156
L87, 157
Line and DC-link identification, 526
Line filter monitoring (option L40), 137
List of abbreviations, 859
Load gear position tracking, 671
Load monitoring, 660
LOCAL/REMOTE key, 335
Lock AOP LOCAL Mode, 339
Low overload, 835

M

M13, 62
M21, 58
M23, 59
M43, 59
M54, 59
M78, 62
Main switch incl. fuses (option L26), 136
Maintenance, 772, 772
Maintenance and servicing, 771
MBAP, 450
MDS (motor data set), 295
    Copy, 296
Measurement probe evaluation, 682
Measuring gearbox, 638
Measuring time to evaluate zero speed, 628
Mechanical installation
    Checklist, 44
Media redundancy, 403
Memory card
    Slot, 107, 217
Menu
    AOP diagnostics, 333
    AOP30 settings, 325
    Basic Commissioning, 322
    Battery status, 333
    Battery symbol, 332
    Commissioning / service, 322
    Complete commissioning, 322
    Control settings, 325
    Curve recorder, 323
    Curve recorder settings, 329
    Database contents, 333
    Database statistics, 334
    Database version, 333
    Date format, 331
    Define operation screen, 325
    Device commissioning, 323
    Display settings, 325
    DO name display mode, 331
    Drive commissioning, 322
    Drive diagnostics, 323
    Fault/alarm memory, 321
    Keyboard test, 333
    LED test, 334
    Motor identification, 322

Operation screen, 319
Parameterization, 320
readme.oss, 332
Reset AOP settings, 332
Reset fan operating time, 322
Scaling to motor current, 331
Screenshots, 334
Setting the date, 330
Setting the time, 330
Software Version, 333
Sprachauswahl/Language selection, 335
Structure, 318
Minimum speed, 468
Modbus Application Header, 450
Modbus TCP, 444
Activate via interface X1400, 446
Activate via interface X150, 445
Communication via data set 47, 453
Function codes used, 450
Mapping tables, 447
Modbus register to the parameters of the Control Unit, 447
Parameterizing communication for X1400, 447
Parameterizing communication for X150, 446
Read and write access, 450
Reading and writing parameters, 452
Moment of inertia estimator, 662
Accelerated estimation, 665
Speed controller adaptation, 665
Monitoring functions, 680
Monitoring Functions, 729
Monitoring, tolerance band, pulse number, 631
Motor changeover/selection, 560
Motor data identification, 532
Motor data set, 295
Motor identification, 531
Motorized potentiometer, 314
Mounting
Canopies and hoods, 56
Canopy to increase the degree of protection to IP21, 58
Hood to increase the degree of protection to IP23/IP43/IP54, 59
Multiturn encoder, 637

N

NAMUR
Outlet for external auxiliaries (option B03), 220
Separate 24 V DC power supply (option B02), 220
NAMUR terminal block (option B00), 218
NH fuse
Replacement, 820

O

OFF key, 336
ON key, 336
Online operation with STARTER, 389
open actual speed value, 504
Operating hours counters, 577
Operation on a non-grounded system, 84
Operation screen, 319
Operator input inhibit / parameters inhibit key, 340
Operator panel, 270
Overview, 317
Option K95, 206
Option M90 (crane transport aids), 51
Option short codes, 37
Original roof screws, 52
Outgoing section for external auxiliary equipment for NAMUR (option B03), 220
Output terminals, 517
Overload capability, 835
Overload responses, 730
Overvoltage limitation (option L21), 135

P

Parallel operation of communication interfaces, 460
Parameter request and parameter response, 355
Parameter request and response, 356
Parameter reset, 283
Parameter reset via STARTER, 284
Resetting Parameters via AOP30, 283
Parameterization errors, 343
Permanent-magnet synchronous motors, 512
Position actual value conditioning, 669
Position controller, 679
Position tracking, 638
Measuring gearbox, 637
Power block
Crane lifting lugs, 775
Frame size FX, replacement, 786
Frame size GX, replacement, 788
Frame size HX, replacement, 790
Frame size JX, replacement, 794
Power connections, 76
Connecting the motor and power cables, 80
Power supply, internal, 83
Pre-control, 666

Preparation
Mechanical installation, 45
PROFIBUS, 375, 379
Address switches, 103, 383
Bus terminating resistor, 102, 377
Connectors, 102, 376
Diagnostics, 370
DPMC1 and DPMC2, 380
Master Classes 1 and 2, 380
Setting the address, 103, 382
Setting the PROFIBUS Address, 382
PROFIBUS connection, 101, 375
PROFIBUS diagnostics data, 370
Channel-related diagnostics, 373
Data sets DS0/DS1 and diagnostics alarm, 374
Identifier-related diagnostics, 372
Standard diagnostics, 371
Status messages/module status, 372
PROFIdrive, 344
Acyclic communication, 353
Application classes, 346
Communication types, 345
Controller, 345
Cyclic communication, 348
Device classes, 344
Drive unit, 345
Message classes, 367
Message classes for PROFINET, 368
PROFIBUS message classes, 370
Supervisor, 345
PROFIenergy, 407
Certification, 407
Commands, 410
PROFINET
Connection channels, 401
Data transfer, 400
Diagnostics, 368
Structure example of a system redundancy, 405
System redundancy, 404
PROFINET interface, 215
PROFINET IO, 379, 393
Addresses, 395
Device name (NameOfStation), 397
Dynamic IP address assignment, 398
Identification & Maintenance, 413
IP address, 396
IP address assignment, 396
MAC address, 395
RT and IRT, 394
PROFINET IO with IRT, 395
PROFINET IO with RT, 394
Propagation, 303
Propagation type, 303
Protecting power components, 729
Protective functions, 729
PT100, 738
PT100 evaluation unit (option L86), 156
PT1000, 738
PTC, 738
Pulse frequency wobbling, 575
Pulse number correction for faults, 630

Q

Quality, 31

R

Ramp-function generator, 470
Ramp-function generator tracking, 471
Rating plate
Date of manufacture, 37
Reactive power compensation, 528
Real-time communication, 394
Recycling, 859
Reference mark search, 682
Reference model, 499
Relay outputs, 118
Replacement
Automatic firmware update, 825
Control Interface Module, frame size FX, 778
Control Interface Module, frame size GX, 780
Control Interface Module, frame size HX, 782
Control Interface Module, frame size JX, 784
Crane lifting lugs, 775
DC fuses, frame size HX, 814
DC fuses, frame size JX, 817
Error messages, 825
Fan in the Active Interface Module (frame size FI), 806
Fan in the Active Interface Module (frame size GI), 808
Fan in the Active Interface Module (frame size HI), 810
Fan in the Active Interface Module (frame size JI), 812
Fan, frame size FX, 796
Fan, frame size GX, 798
Fan, frame size HX, 800
Fan, frame size JX, 804
Filter mats, 777
Installation device, 774
Operator panel, 822

Operator panel battery, 822
Power block, frame size FX, 786
Power block, frame size GX, 788
Power block, frame size HX, 790
Power block, frame size JX, 794
Replacing components, 777
Replacing the Backup Battery of the Cabinet Operator Panel, 822
Replacing the cabinet operator panel, 822
Residual risks, 27
Resonance damping, 480
Ring topology, 403
Scalance, 403
Rotating measurement, 536
Shortened, 538
Rotor position adaptation, 629
Runtime, 577

S

S5 – Selector for voltage/current AI0, AI1, 115
Safe Brake Adapter, 204
230 VAC, 204
Safe Brake Adapter 230 VAC (option K88), 204
Safe Brake Control, 204
Safety instructions
Electromagnetic fields, 21
Electrostatic sensitive devices, 25
General safety instructions, 19
Safety Integrated, 6
Safety license for one axis (option K01), 200
Saving the parameters permanently, 343
SBC (Safe Brake Control), 204
Separate 24 V DC power supply for NAMUR (option B02), 220
Sequence of objects in the telegram, 381
Serial interface (RS232), 105, 214
Service, 31
Setpoint addition, 466
Setpoint channel, 466
Setpoint sources, 312
Analog inputs, 312
Fixed speed setpoints, 315
General information, 286
Motorized potentiometer, 314
Setting the PROFIBUS Address, 382
Settings for the infeed (Active Infeed) under difficult line conditions, 529
Shield support, 109
Shipping and handling monitors, 47
Shock indicator, 47
Tilt indicator, 47
Shock indicator, 47
Short-circuit test, 559
Shortened rotating measurement, 538
Siemens Industry Online Support
App, 5
Signal connections, 109
Signal edge evaluation, 628
Simple brake control, 583
Simulation operation, 578
SINAMICS Link, 415
Activation, 422
Bus cycle, 416
Commissioning, 418
Communication failure, 425
Configuration example, 423
Diagnostics, 425
Preconditions, 415
Receive data, 415
Receiving data, 421
Send data, 415
Sending data, 419
Synchronous cycle, 416
Topology, 417
Transmission time, 416
Sine-wave filter (option L15), 130
Singleturn encoder, 637
Skip frequency bands, 468
Sliding averaging of the speed actual value, 629
Slip compensation, 481
SMC10, 171
Connection example, 174
SMC10 Sensor Module Cabinet-Mounted (option K46), 171
SMC20, 176
Connection example, 179
SMC20 Sensor Module Cabinet-Mounted (option K48), 176
SMC30, 181
SMC30 Sensor Module Cabinet-Mounted (option K50), 181
SMC30: connection examples,
Speed controller, 493
Speed controller adaptation, 500
Speed controller optimization, 536
Speed controller pre-control, 497
Speed limitation, 469
Stall protection, 734
STARTER, 222
Access point, 262
Commissioning, 225
Creating a project, 225
DEVICE, 263

Installation, 224
Online operation via PROFINET, 389
S7ONLINE, 263
Target device selection, 262
Transferring the drive project, 263
User interface, 224
STARTER via Ethernet, 264
Parameter, 269
Setting the IP Address of the drive, 266
Setting the IP address of the PG/PC interface, 265
Starting the web server, 616
Stationary measurement, 532
Storage, 43
Structure, 32
Switching between clockwise and counter-clockwise rotation, 337
Synchronization, 586
System redundancy, 404
Configuring, 405
Diagnostics LEDs, 405
Example, 405

T

TB30, 193
Technical data, 837
Cabinet units, 380 ... 480 V 3 AC, 838
Cabinet units, 500 ... 690 V 3 AC, 846
General, 830
Version with option L04, 3-phase 380 V – 480 V AC, 120
Technology controller, 642
Telegram selection, user defined, 349
Telegrams
Sequence of objects, 381
Telegrams and process data, 349
Temperature sensor, 115
Temperature sensor connection
Control Interface Module, 737
Sensor Module, 736
TM31, 735
Temperature sensor evaluation, 735
3-mass model, 742
Bimetallic NC contact, 738
I2t motor model, 740
KTY, 738
PT100, 738
PTC, 738
Wire-breakage monitoring, 739
Terminal Board TB30 (option G62), 193
Terminal Module TM150, 165
Test pulse evaluation, 559
Thermal monitoring, 730
Thermal motor models, 739
Thermal motor protection, 735
Thermistor Motor Protection Unit (Option L83/L84), 155
Tightening torques, 773
Tilt indicator, 47
TM150, 165
Connecting, 166
Forming groups, 747
Protective conductor connection and shield support, 168
Sensor failure in a group, 749
Smoothing time for temperature channels, 749
Temperature evaluation, 748
Temperature measurement, 744
Temperature sensor types, 745
TM31, 109, 191
TM31, connection overview, 111
TM31, front view, 110
TM54F, 203
TM54F Terminal Module, 203
TM54F Terminal Module (option K87), 203
Tolerant encoder monitoring, 623
Tool, 49, 70, 772
Torque limiting, 509
Transport, 41
Transport eyebolts, 51
Type plate, 35
Option short codes, 37

U

U/f control, 474
Ungrounded system, 84
Unit changeover, 581
Unpacking, 49

V

Variable power factor, 528
Vdc control, 545, 545
Vdc_min control, 546
Vector control
sensorless, 484
with encoder, 491
Vector speed/torque control with/without encoder, 483
Ventilation, 772
Voltage boost, 477
at startup, 479

During acceleration, 479
Permanent, 478
VSM10, 190
VSM10 Voltage Sensing Module (option K51), 190

W

Web server, 606
Assigning the SINAMICS password, 621
Changing the SINAMICS password, 621
Configuring user accounts, 620
Deleting the SINAMICS password, 622
Login, 616
Logout, 620
Saving settings, 619
User-defined Web pages, 615
Web sites of third-party companies, 6
Wire-breakage monitoring, 739
Write protection, 590

X

X100, 96, 209
X101, 96, 209
X102, 96, 209
X103, 96, 209
X122, 97, 210
X126, 101
X127, 104, 213
X132, 99, 212
X140, 105, 214
X1400, 164
X150, 215
X451 (CAN bus), 161
X452 (CAN bus), 161
X520, 112
SMC20, 177
SMC30, 185
X521, 114, 187
X522, 115
X530, 113
X531, 187
X540, 116
X541, 117
X542, 118

Z

Zero mark tolerance, 625

Further information

Siemens:
www.siemens.com

Industry Online Support (service and support):
www.siemens.com/online-support

IndustryMall:
www.siemens.com/industrymall

Siemens AG
Digital Industries
Motion Control
P.O. Box 3180
D-91050 Erlangen
Germany

Scan the QR-Code for product information