elco

SPARE PARTS EXPLODED VIEW
DUAL-FUEL BURNERS
Model
CB-N8/9 GL-E

R8220125-01 - 12/12/2017

Col	Reference	Model type	Begin	End
1	3752891	N 8.5800 GL-E BT3 KN	04-2014	07-2015
1	3752895	N 8.5800 GL-E BT3 KM	04-2014	07-2015
1	3752899	N 8.5800 GL-E BT3 KL	04-2014	07-2015
2	3752892	N 8.7100 GL-E BT3 KN	04-2014	07-2015
2	3752896	N 8.7100 GL-E BT3 KM	04-2014	07-2015
2	3752900	N 8.7100 GL-E BT3 KL	04-2014	07-2015
3	3752893	N 9.8700 GL-E BT3 KN	04-2014	07-2015
3	3752897	N 9.8700 GL-E BT3 KM	04-2014	07-2015
3	3752901	N 9.8700 GL-E BT3 KL	04-2014	07-2015
4	3752894	N 9.10400 GL-E BT3 KN	04-2014	07-2015
4	3752898	N 9.10400 GL-E BT3 KM	04-2014	07-2015
4	3752902	N 9.10400 GL-E BT3 KL	04-2014	07-2015
5	3750515	GT-d457-2	11-2013	-
6	3750516	GT-d458-65	06-2012	-
7	3750517	GT-d459-80	03-2013	-
8	3750518	GT-d460-100	10-2012	-
9	3750537	GT-s457-2	08-2012	-
10	3750538	GT-s458-65	07-2012	-
11	3750539	GT-s459-80	08-2013	-
12	3750540	GT-s460-100	03-2014	-
13	3750541	GT-s461-125	06-2014	-

12/2017-R8220125-420010771400A

sales@prom-elec.com / ООО ПРОМЭЛЕКТРОНИКА

1000

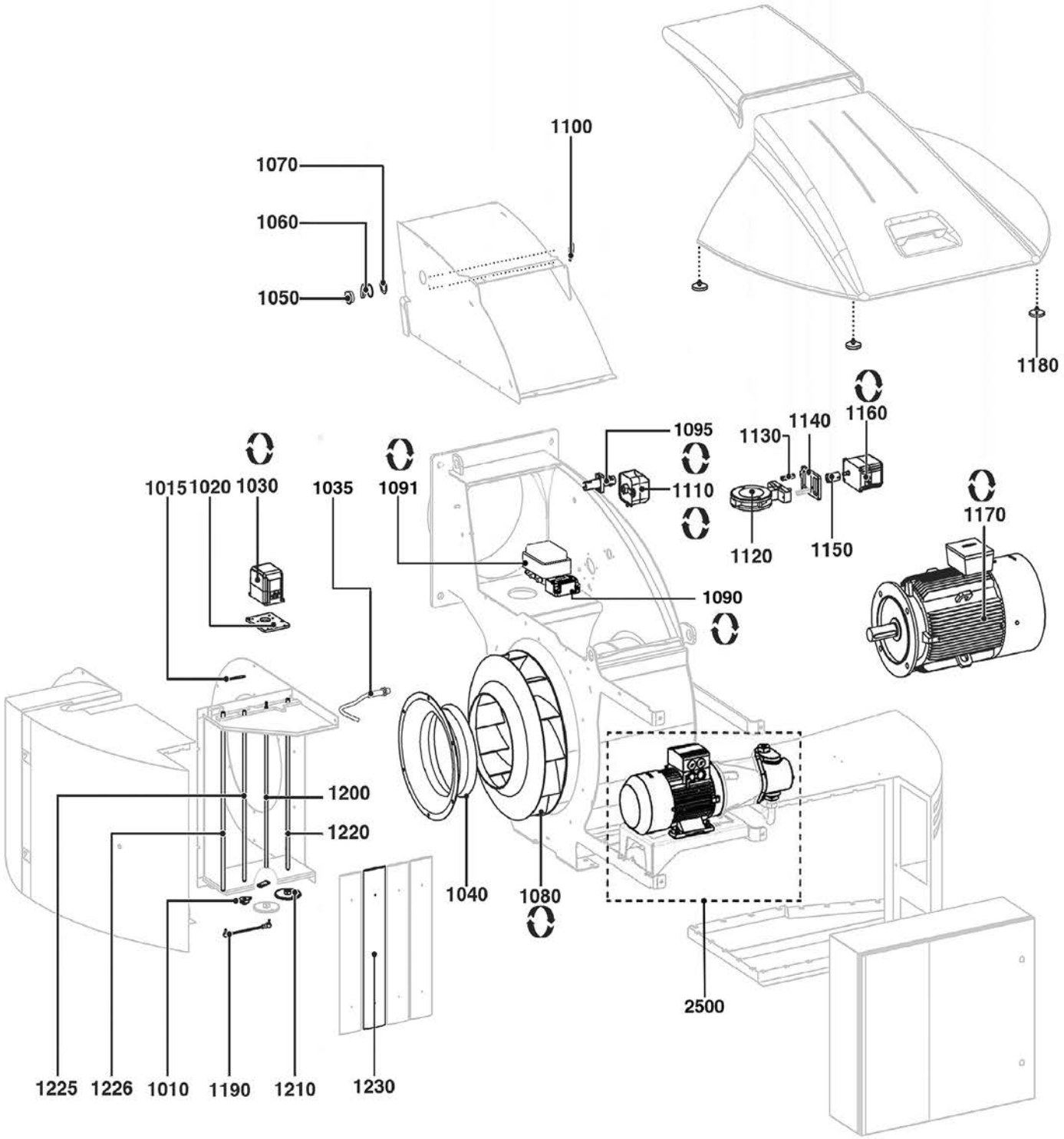
1100
1070
1060
1050
1180
1160
1140
1130
1095
1110
1120
1150
1170
1015
1020
1030
1035
1091
1090
1200
1220
1040
1080
2500
1225
1226
1010
1190
1210
1230

	Description	Manf. Pt. N	Type	N 8.5800 GL-E BT3 (1)	N 8.7100 GL-E BT3 (2)	N 9.8700 GL-E BT3 (3)	N 9.10400 GL-E BT3 (4)	GT-d457-2 (5)	GT-d458-65 (6)	GT-d459-80 (7)	GT-d460-100 (8)	GT-s457-2 (9)	GT-s458-65 (10)	GT-s459-80 (11)	GT-s460-100 (12)	GT-s461-125 (13)	14	15	16	17	18	From	to
1000	BURNER BODY																						
1010	FLANGE 37X62X15 D12 KFL001	65311967		●	●	●	●																
1015	POSITION AIR FLAP INDICATOR	65311657		●	●	●	●																
1020	ACTUATOR HOLDER / AIR FLAP	65311689		●	●	●	●																
1030	ACTUATOR STE 4,5 Q3.51/6+CABLE L3000	65311650	BT3	●	●	●	●																
	ACTUATOR STM 40 Q15.51/8 2NR	65311833	Etamatic	●	●	●	●																
1035	NAMUR SENSOR D14	1658418384		●	●	●	●																
1040	AIR RECYCLING D288X127	65311673		●																			
	AIR RECYCLING D318X134	65311672			●																		
	AIR RECYCLING D332 X 127,5	65311665				●																	
	AIR RECYCLING D344X126	65311715					●																
1050	COLORLESS SIGHT GLASS D55X21	1180603227		●	●	●	●																
1060	SIGHT GLASS COVER D55X61	1188052260		●	●	●	●																
1070	NUT/SIGHT GLASS M48X1,5 SW60	1180559591		●	●	●	●																
1080	FAN WHEEL D533/290X83 D42	65311716		●																			
	FAN WHEEL D556/320X86 D42	65311670			●																		
	FAN WHEEL D590/334X92 D42	65311717				●																	
	FAN WHEEL D600/346X93 D48	65311718					●																
1090	IGNITION TRANSFORMER EBI 1X11 230V	65311471		●	●	●	●																
1091	IGNITION TRANSFO.ZA 20 140E21REP.ZM20/14	1738733651		●	●	●	●																
1095	PHOTOCELL D-LX100 EK-S (IR)	13019357	BT3	●	●	●	●																
	PHOTOCELL FFS08-UV1 659D31 - 5M W/O	65312274	Etamatic	●	●	●	●																
1100	MIRROR/SIGHT GLASS	65311472		●	●	●	●																
1110	AIR PRESS.SWITCH LGW 50 A2P 2,5-50MB	65311595		●	●	●	●																
1120	GAS FLAP ASS. D100 Z05 Z	65310688		●	●	●	●																
1130	SPACER SW13X55	65311659		●	●	●	●																
1140	ACTUATOR HOLDER / GAS FLAP	65311658		●	●	●	●																
1150	COUPLING GAS FLAP/ACTUATOR STE N8-N9	65311660		●	●	●	●																
1160	ACTUATOR STE 4,5 Q3.51/6+CABLE L3000	65311650	BT3	●	●	●	●																
	ACTUATOR STM 40 Q15.51/8 2NR	65311833	Etamatic	●	●	●	●																
1170	MOTOR 11KW 400/690V D42 IE3 ELV BLACK	65326333		●																			
	MOTOR 15KW 400/690V D42 IE3 ELV BLACK	65326334			●																		
	MOTOR 18,5KW 400/690V D42 IE3 ELV BLACK	65326335				●																	
	MOTOR 22KW 400/690V D48 IE3 ELV BLACK	65326336					●																
1180	MAGNET FIX BURNER COVER	65311502		●	●	●	●																
1190	CONNECTING ROD CS10 L200	65311714		●	●	●	●																
1200	SPINDLE / AIR FLAP D12X673 D4H7	65311686		●	●	●	●																
1210	COGWHEEL Z=100 M=1 BO=12MM /BORG. 6 MM	65311701		●	●	●	●																
1220	SPINDLE / AIR FLAP D12X670 D4H7	65311685		●	●	●	●																
1225	SPINDLE / AIR FLAP D12X705 M8 + POINTER	65311687		●	●	●	●																
1226	SPINDLE / AIR FLAP D12X705 + POINTER	65311688		●	●	●	●																
1230	AIR FLAP	65311684		●	●	●	●																

1500

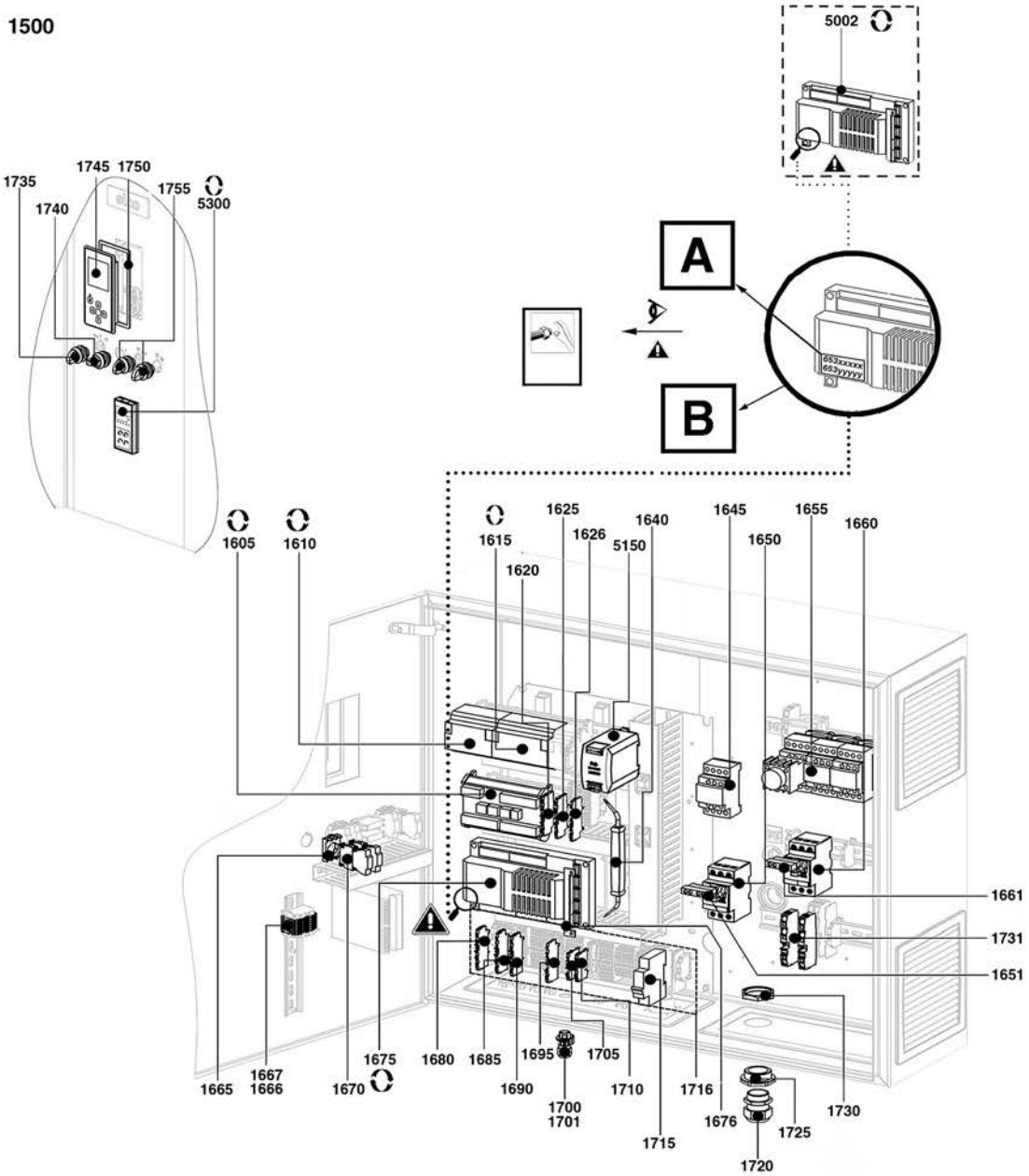
5002
A
B
1735
1740
1745
1750
1755
5300
1605
1610
1615
1620
1625
1626
5150
1640
1645
1650
1655
1660
1661
1731
1651
1730
1665
1667
1666
1670
1675
1680
1685
1690
1695
1700
1701
1705
1710
1715
1716
1676
1725
1720

5000

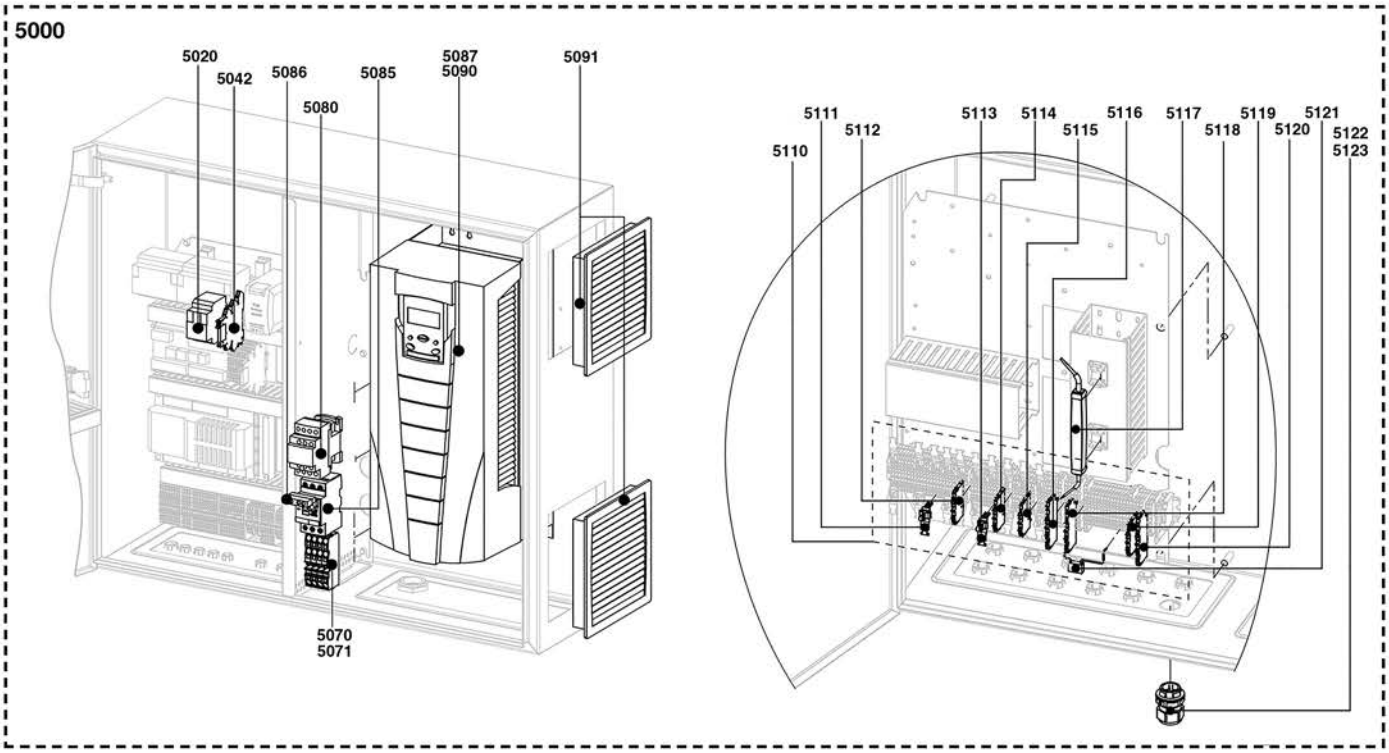
5020
5042
5086
5085
5080
5087
5090
5091
5070
5071
5110
5111
5112
5113
5114
5115
5116
5117
5118
5119
5120
5121
5122
5123

	Description	Manf. Pt. N	Type	N 8.5800 GL-E BT3	N 8.7100 GL-E BT3	N 9.8700 GL-E BT3	N 9.10400 GL-E BT3	GT-d457-2	GT-d458-65	GT-d459-80	GT-d460-100	GT-s457-2	GT-s458-65	GT-s459-80	GT-s460-100	GT-s461-125								31	
				1	2	3	4	5	6	7	8	9	10	11	12	13	14	15	16	17	18	From	to
1500	ELECTRIC PART																						
1605	ADAPTER BT300/DFM300 RAST5	65311789		●	●	●	●																
1610	LCM100 MODULE (LSB-M 667R0500-1)	65311790		●	●	●	●																
1615	DFM300 MODULE (LSB-M 667R0600-1)	65311791		●	●	●	●																
1620	FEED-THROUGH TERMINAL (GREY) 2001-1401	65311449		●	●	●	●																
1625	FEED-THROUGH TERMINAL NEUTRAL 2001-1404	65311447		●	●	●	●																
1626	FEED-THROUGH TERMINAL (EARTH) 2001-1407	65311445		●	●	●	●																
1640	OPERATING TOOL WAG 2009-309	65311446		●	●	●	●																
1645	MOTOR CONTACTOR SCH D 3-4kW LC1D09P7	65311793		●	●	●	●																
1650	CIRCUIT BREAK. MOTOR 3-4KW GV2ME14	65311794		●	●	●	●																
1651	AUXILIARY SWITCH GVAE11	65311795		●	●	●	●																
1655	MOTOR STARTER Y/D 11KW LC3D12AP7	65312015		●	●																		
	MOTOR STARTER Y/D 18KW LC3D18P7	65311796				●																	
	MOTOR STARTER Y/D 22KW LC3D32AP7	65311797					●																
1660	CIRCUIT BREAK. MOTOR 11KW GV2ME22	65312018		●																			
	CIRCUIT BREAK. MOTOR 15KW GV2ME32	65311798			●																		
	CIRCUIT BREAK. MOTOR 18,5KW GV3P40	65312019				●																	
	CIRCUIT BREAK. MOTOR 22KW GV3P50	65311917					●																
1661	AUXILIARY SWITCH GVAE11	65311795		●	●	●	●																
1665	EQUIPMENT RACK, 3-TRAY M22-A	65311919		●	●	●	●																
1666	FEED-THROUGH TERMINAL (GREY) 2001-1201	65311443		●	●	●	●																
1667	FEED-THROUGH TERMINAL (EARTH) 2001-1207	65311444		●	●	●	●																
1670	DOUBLE NORMALLY CLOSE CONTACT M22-CK02	65311922		●	●	●	●																
	DOUBLE NORMALLY OPEN CONTACT M22-CK20	65311924		●	●	●	●																
	LED ELEMENT, WHITE M22-CLED230	65311920		●	●	●	●																
	NORMALLY CLOSED CONTACT M22 -CK01	65311921		●	●	●	●																
	NORMALLY OPEN CONTACT M22-CK10	65311923		●	●	●	●																
1675	CONTROL UNIT BT340 GL-E	65312454		●	●	●	●																
1676	X30-X34 BLANK COVER 667R0001	65311926	BT3	●	●	●	●																
1680	FEED-THROUGH TERMINAL (ORANGE) 2001-1402	65311927		●	●	●	●																
1685	FEED-THROUGH TERMINAL (EARTH) 2001-1407	65311445		●	●	●	●																
1690	FEED-THROUGH TERMINAL (GREY) 2001-1401	65311449		●	●	●	●																
1695	FEED-THROUGH TERMINAL NEUTRAL 2001-1404	65311447		●	●	●	●																
1700	CABLE GLAND M16	65311451		●	●	●	●																
1701	CABLE GLAND M20	65311758		●	●	●	●																
	CABLE GLAND M25	65311759		●	●	●	●																
1705	FEED-THROUGH TERMINAL (GREY) 2001-1201	65311443		●	●	●	●																
1710	FEED-THROUGH TERMINAL (ORANGE) 2001-1202	65311441		●	●	●	●																
1715	CIRCUIT BREAKER 1P SCHNEIDER 23614	65311931		●	●	●	●																
1716	TERMINAL STRIP WAGO STRG. N6-9 GL-E BT	65311932		●	●	●	●																
1720	CABLE GLAND CLICK M40X1,5	65311934		●	●	●	●																
	CABLE GLAND M32X1,5	65311933		●	●	●	●																
1725	REDUCER SKINDICHT KU-M M40x1,5/32X1.5	65311935		●	●	●	●																
1730	LOCK NUT M40X1,5	65311936		●	●	●	●																
1731	FEED-THROUGH TERMINAL (GREY) 2006-1301	65312106		●																			
	FEED-THROUGH TERMINAL (GREY) 2010-1301	65311937			●																		
	FEED-THROUGH TERMINAL (GREY) 2016-1301	65311938				●	●																
1732	FEED-THROUGH TERMINAL (EARTH)	65312040			●																		
	FEED-THROUGH TERMINAL (EARTH) 2006-1307	65312107		●																			
	FEED-THROUGH TERMINAL (EARTH) 2016-1307	65311939				●	●																
1735	ILLUMINAT. SELECT. BUTTON, 3-STEP,LOCK.	65311436		●	●	●	●																
1740	ILLUMINAT. SELECT. BUTTON, 3-STEP,LOCK.	65311437		●	●	●	●																
1745	DISPLAY FOR CONTROL UNIT BT3XX	65326869		●	●	●	●																
1750	GASKET/DISPLAY 152/140X80/70X2	65311364		●	●	●	●																
1755	ILLUMINAT. SELECT. BUTTON, 2-STEP,LOCK.	65311438		●	●	●	●																
5000	ACCESSORY																						
5002	CONTR. UNIT BT340 CUSTOMIZED SETTING	65312450		●	●	●	●																
	CONTROL UNIT BT340 BASIC SETTING	65312447		●	●	●	●																
	CONTROL UNIT BT340 GL-EF3+FRQ.CTRL	65312455		●	●	●	●																
5020	VSM100 MODULE (LSB-M 667R0200-1)	65311918	FQC	●	●	●	●																
5042	RELAY FIN 38.61.8.240.5060 KLL 1W FZ	65311940	FQC	●	●	●	●																
5070	FEED-THROUGH TERMINAL (GREY) 2010-1301	65311937	FQC	●	●																		
	FEED-THROUGH TERMINAL (GREY) 2016-1301	65311938	FQC			●	●																
5071	FEED-THROUGH TERMINAL (EARTH) 2016-1307	65311939	FQC	●	●	●	●																
5080	MOTOR CONTACTOR SCH D 3-4kW LC1D09P7	65311793	FQC	●	●	●	●																
5085	CIRCUIT BREAK. MOTOR 3-4KW GV2ME14	65311794	FQC	●	●	●	●																
5086	AUXILIARY SWITCH GVAE11	65311795	FQC	●	●	●	●																

1500

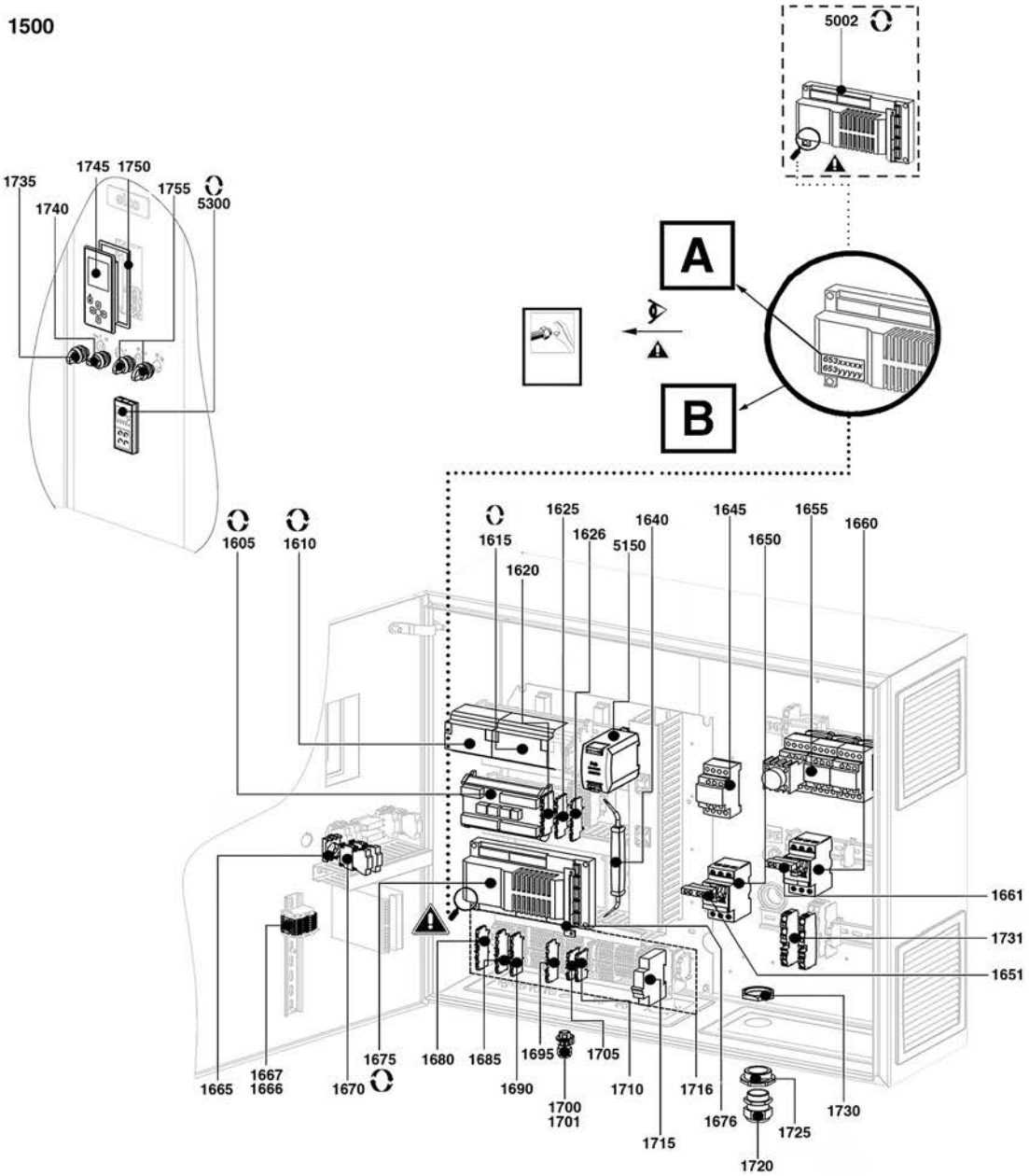
5002
A
B
1735
1740
1745
1750
1755
5300
1605
1610
1615
1620
1625
1626
5150
1640
1645
1650
1655
1660
1661
1731
1651
1665
1667
1666
1670
1675
1680
1685
1690
1695
1700
1701
1705
1710
1715
1716
1676
1720
1725
1730

5000

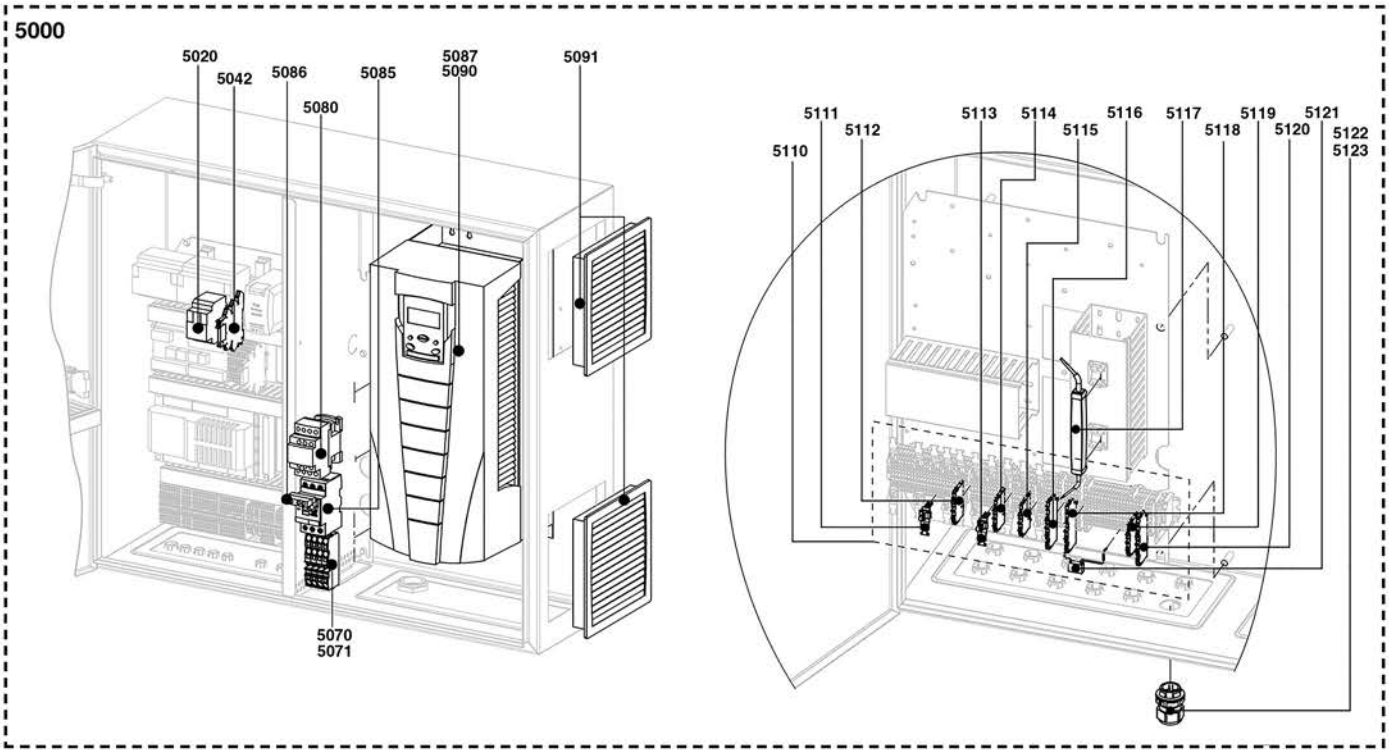
5020
5042
5086
5080
5085
5087
5090
5091
5070
5071
5110
5111
5112
5113
5114
5115
5116
5117
5118
5119
5120
5121
5122
5123

	Description	Manf. Pt. N	Type	N 8.5800 GL-E BT3 (1)	N 8.7100 GL-E BT3 (2)	N 9.8700 GL-E BT3 (3)	N 9.10400 GL-E BT3 (4)	GT-d457-2 (5)	GT-d458-65 (6)	GT-d459-80 (7)	GT-d460-100 (8)	GT-s457-2 (9)	GT-s458-65 (10)	GT-s459-80 (11)	GT-s460-100 (12)	GT-s461-125 (13)	14	15	16	17	18	From	to
5087	FREQUENCY INVERTER ACH550 - 11kW	65312014	FQC	●																			
	SPEED DRIVE ACH550 15KW	65311941	FQC		●																		
	SPEED DRIVE ACH550 18,5KW	65312021	FQC			●																	
	SPEED DRIVE ACH550 22KW	65311942	FQC				●																
5090	FAN FREQUENCY INVERTER	65311943	FQC	●	●	●	●																
5091	FILTER AERAT. 177X177 EFA 200R5/ELDON	65311944	FQC	●	●	●	●																
5110	TERMINAL STRIP WAGO STRG.N6-9 GL-E/F3 TB	65311439	Etamatic	●	●	●	●																
5111	CONNECTOR EMV CARRIER 3-6 MM	65311440	Etamatic	●	●	●	●																
5112	FEED-THROUGH TERMINAL (ORANGE) 2001-1202	65311441	Etamatic	●	●	●	●																
5113	CONNECTOR EMV CARRIER 6-8 MM	65311442	Etamatic	●	●	●	●																
5114	FEED-THROUGH TERMINAL (GREY) 2001-1201	65311443	Etamatic	●	●	●	●																
5115	FEED-THROUGH TERMINAL (EARTH) 2001-1207	65311444	Etamatic	●	●	●	●																
5116	FEED-THROUGH TERMINAL (EARTH) 2001-1407	65311445	Etamatic	●	●	●	●																
5117	OPERATING TOOL WAG 2009-309	65311446	Etamatic	●	●	●	●																
5118	FEED-THROUGH TERMINAL NEUTRAL 2001-1404	65311447	Etamatic	●	●	●	●																
5119	FEED-THROUGH TERMINAL NEUTRAL 2001-1204	65311448	Etamatic	●	●	●	●																
5120	FEED-THROUGH TERMINAL (GREY) 2001-1401	65311449	Etamatic	●	●	●	●																
5121	TEST LOAD ETAMATIC 663R1199	65311450	Etamatic	●	●	●	●																
5122	CABLE GLAND M16	65311451	Etamatic	●	●	●	●																
	CABLE GLAND M20	65311758	Etamatic	●	●	●	●																
	CABLE GLAND M25	65311759	Etamatic	●	●	●	●																
5123	CLIC TOOL M16	65311786	Etamatic	●	●	●	●																
	CLIC TOOL M20	65311787	Etamatic	●	●	●	●																
	CLIC TOOL M25	65311788	Etamatic	●	●	●	●																
5150	POWER SUPPLY ML30.100-24V DC	1758811789		●	●	●	●																
5300	CONTROLLER RWF 55.50A9	65114033		●	●	●	●																

2000

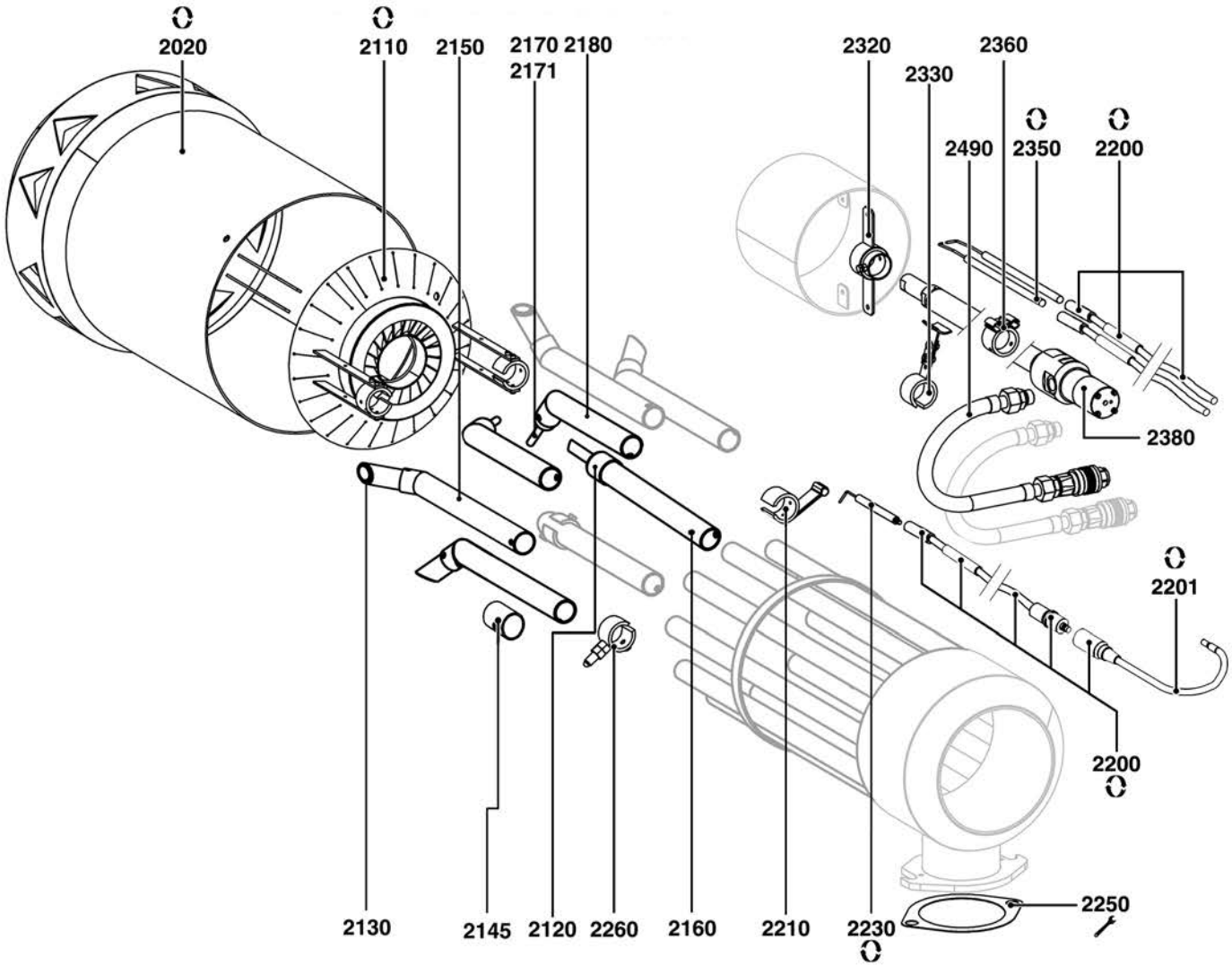
2020
2110
2150
2170
2171
2180
2320
2330
2360
2490
2350
2200
2380
2201
2200
2250
2130
2145
2120
2260
2160
2210
2230

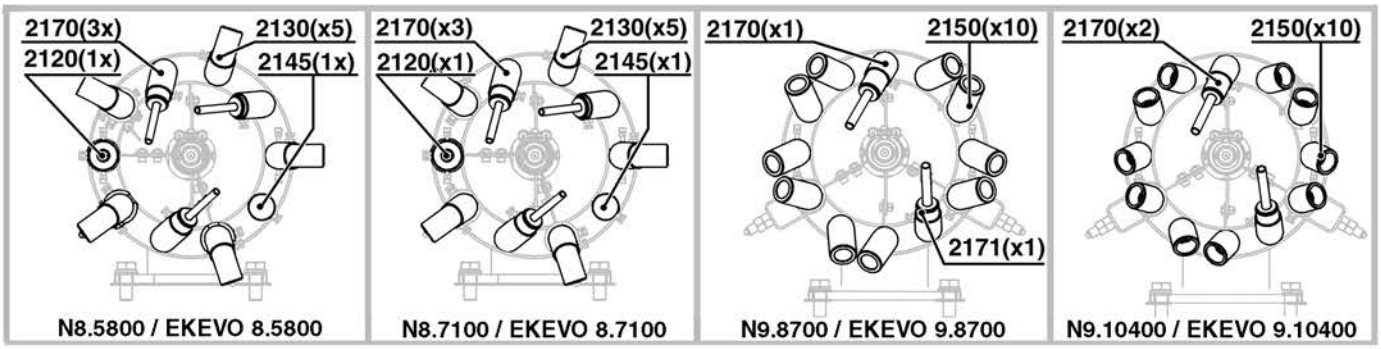
2170(3x)
2130(x5)
2120(1x)
2145(1x)
N8.5800 / EKEVO 8.5800
2170(x3)
2130(x5)
2120(x1)
2145(x1)
N8.7100 / EKEVO 8.7100
2170(x1)
2150(x10)
2171(x1)
N9.8700 / EKEVO 9.8700
2170(x2)
2150(x10)
N9.10400 / EKEVO 9.10400

	Description	Manf. Pt. N	Type	N 8.5800 GL-E BT3	N 8.7100 GL-E BT3	N 9.8700 GL-E BT3	N 9.10400 GL-E BT3	GT-d457-2	GT-d458-65	GT-d459-80	GT-d460-100	GT-s457-2	GT-s458-65	GT-s459-80	GT-s460-100	GT-s461-125							31	
				1	2	3	4	5	6	7	8	9	10	11	12	13	14	15	16	17	18	From		to
2000	COMBUSTION HEAD																							
2020	FLAME TUBE D369/400/320 L617	65312078	KN	●																				
	FLAME TUBE D369/400/320 L757	65312079	KM	●																				
	FLAME TUBE D369/400/320 L897	65312080	KL	●																				
	FLAME TUBE D369/415/351 L638	65312081	KN		●																			
	FLAME TUBE D369/415/351 L778	65312082	KM		●																			
	FLAME TUBE D369/415/351 L918	65312083	KL		●																			
	FLAME TUBE D431,5/373 L408	65312084	KN			●	●																	
	FLAME TUBE D431,5/373 L558	65312085	KM			●	●																	
	FLAME TUBE D431,5/373 L708	65312086	KL			●	●																	
2110	BAFFLE PLATE D300/74X67 20SL	65312088					●																	
	BAFFLE PLATE D320/74X67 20SL	65312087		●	●																			
	BAFFLE PLATE D330/74 BEF.230MM	65311881				●																		
2120	STABILIZATION GAS NOZZLE D 13	65312089		●	●																			
2130	ANGULAR GAS NOZZLE D=20	65312090		●																				
	ANGULAR GAS NOZZLE D=22	65312091			●																			
2145	GASTUBE SHUTTER D30	65312094		●	●																			
2150	ANGULAR GAS NOZZLE D35/24X56/245	65312092				●																		
	ANGULAR GAS NOZZLE D35/27X35/245	65312093					●																	
	GASTUBE D35X2,2X300	65312095		●																				
	GASTUBE D35X2,2X360 GRL.	65311710			●																			
2160	GASTUBE D35X2,2X257 ADJUSTABLE	65311882		●																				
	GASTUBE D35X2,2X360	65311702			●																			
2170	GAS NOZZLE D30X2/10X1,5X103	65312096		●	●																			
	GAS NOZZLE D30X2/D12X1,5	65311683				●	●																	
2171	GAS NOZZLE D30X2/D12X1 L73	65312013				●																		
2180	GAS TUBE D35X2.2X45GR.	65311712			●																			
	GASTUBE D35X2,2X100/35	65312098				●	●																	
	GASTUBE D35X2,2X220/50	65312097		●																				
2200	IGNITION CABLE D6,4/D6,4 L1500 AP	1728777751		●	●	●	●																	
2201	IGNITION CABLE D4/SAT 72750	65310724		●	●	●	●																	
2210	IGNITION ELECTRODE HOLDER	65311662		●	●	●	●																	
2230	IGNITION ELEC.D11X100D6,4D2,5X150 27/90°	65313846				●																		
	IGNITION ELECT. D11X100 D6,4 D2,5X59 45°	65311690		●	●		●																	
2250	GASKET/OVAL FLANGE 210X160X2 D116	65311713		●	●	●	●																	
2260	CENTERING PILLAR N8/EKEVO8	65312022		●	●																			
	CENTERING PILLAR N9/EKEVO9	65312023				●	●																	
2320	CENTRING NOZZLE ROD DM35	65312099		●	●	●	●																	
2330	SUPPORT FOR CENTERING PILLAR	65312100		●	●	●	●																	
2350	IGNITION ELEC.D11X220 D3X150 20° L150 D4	1728703262		●	●	●	●																	
2360	CENTERING RING	65312141		●	●	●	●																	
2380	NOZZLE ROD D35 L560	65312102	KN			●	●																	
	NOZZLE ROD RDG 1250D35 L760	65311817	KM			●																		
	NOZZLE ROD RDG 1250D35 L760	65311817	KN	●	●																			
	NOZZLE ROD RDG 1250D35 L860	65310280	KL			●	●																	
	NOZZLE ROD RDG 1250D35 L860	65310280	KM	●	●																			
	NOZZLE ROD RDG 1250D35 L960	65311818	KL	●	●																			
	NOZZLE ROD RDG1250 L660	65311884	KM				●																	
2490	OIL HOSE DN16 L500	65311435		●	●	●	●																	

2500

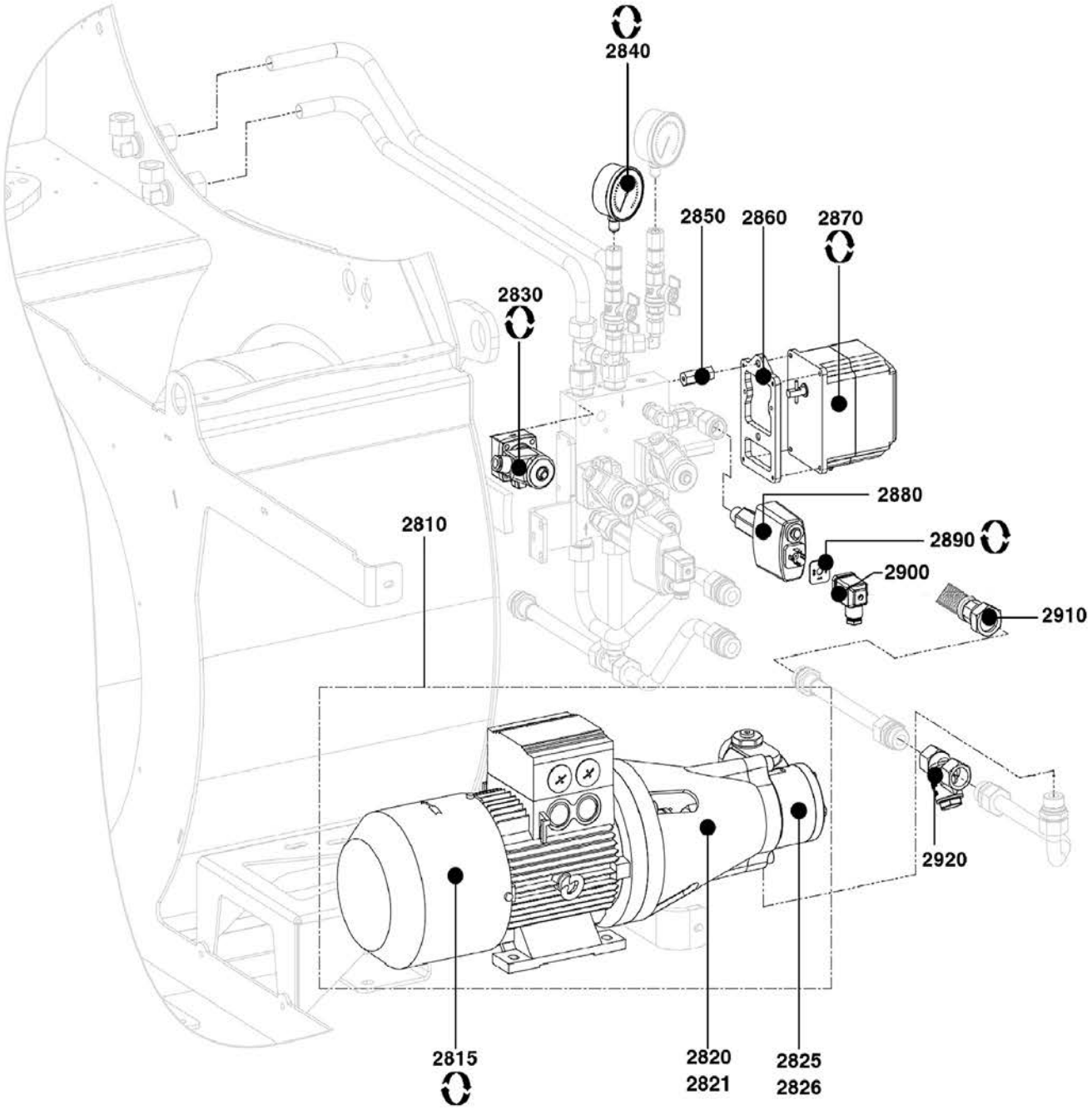
2840
2850
2860
2870
2830
2880
2810
2890
2900
2910
2920
2815
2820
2821
2825
2826

	Description	Manf. Pt. N	Type	N 8.5800 GL-E BT3	N 8.7100 GL-E BT3	N 9.8700 GL-E BT3	N 9.10400 GL-E BT3	GT-d457-2	GT-d458-65	GT-d459-80	GT-d460-100	GT-s457-2	GT-s458-65	GT-s459-80	GT-s460-100	GT-s461-125						31	
				1	2	3	4	5	6	7	8	9	10	11	12	13	14	15	16	17	18	From	to
2500	HYDRAULICS																						
2810	PUMP INSTALL. SMG1630-I-4-SO-IE3 30BAR	65311406		●	●	●																	
	PUMP INSTALL. SMG1631-I-4-SO-IE3 30BAR	65312103					●																
2815	MOTOR 3KW 230/400V D28 1400 TR/MN GMP	65311407		●	●	●																	
	MOTOR 4KW400/690V D28 1400TR/MN GMP IE3	65312104					●																
2820	COUPLING D24/28 PW DM18/MW	1238795399		●	●	●																	
	COUPLING D28/38 PW DM22/MW	1238795402					●																
2821	COUPLING D24/28 GMP	1238795424		●	●	●																	
	COUPLING D28/38	1238795435					●																
2825	OIL PUMP VBHRG 2200L/H	65312105					●																
	OIL PUMP VBHRG I 410 SO 1700L/H	65311410		●	●	●																	
2826	GASKET SET / PUMP D18	13019380		●	●	●																	
	GASKET SET D22	5788707026					●																
2830	SOLEN. VALVE LUC 121F2523 P8 PG11 19W	13022667	RL(Reflow)	●	●	●	●																
	SOLEN. VALVE LUC 321F2523 P8 PG11 19W	13022666	VL(Preflow)	●	●	●	●																
2840	MANOMETER GLYCERIN D 63 0-40 BAR G1/4	65311572		●	●	●	●																
2850	SPACER M6/M8X42 SW15	65311831		●	●	●	●																
2860	PLATE ACTUATOR STE	65311412		●	●	●	●																
2870	ACTUATOR STE 4,5 Q3.51/6+CABLE L3000	65311650	BT3	●	●	●	●																
	ACTUATOR STM 40 Q15.51/8 2NR	65311833	Etamatic	●	●	●	●																
2880	OIL PRESS.SWITCH DSB 158 F931 3-25BAR	65312206		●	●	●	●																
2890	GASKET GDM 3-21	65311616		●	●	●	●																
2900	CONNECTOR GDMW 30-11 DF	65311615		●	●	●	●																
2910	OIL HOSE M30X1,5 DN20 L=1500	13019342		●	●																		
	OIL HOSE M38X1,5 DN25 L=1500	1488436955				●	●																
2920	OIL FILTER RP3/4 PN16	65311578		●	●	●																	
	T-UNION R1Z (STRAINER) OVE	65311414					●																

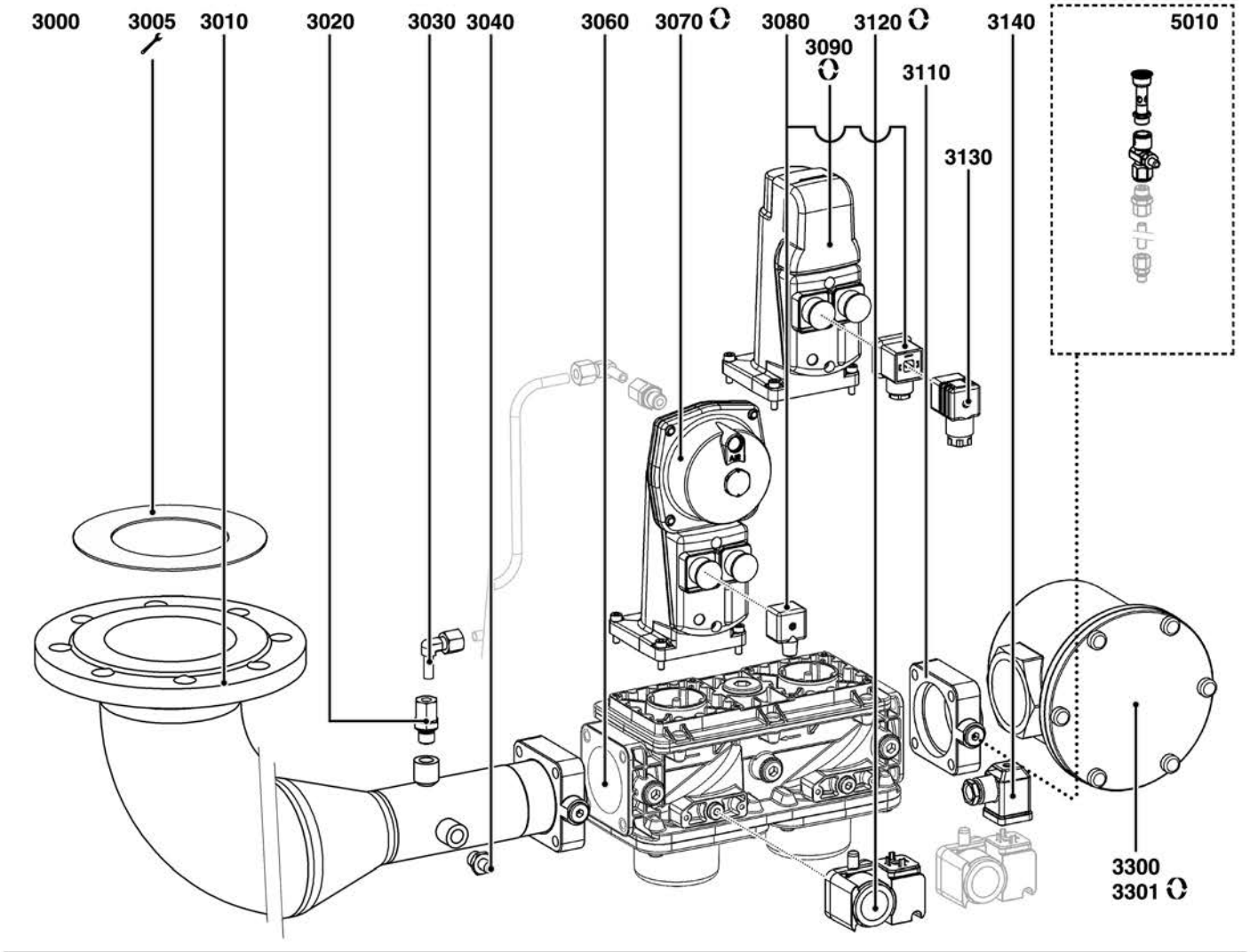
3000
3005
3010
3020
3030
3040
3060
3070
3080
3120
3140
5010
3090
3110
3130
3300
3301

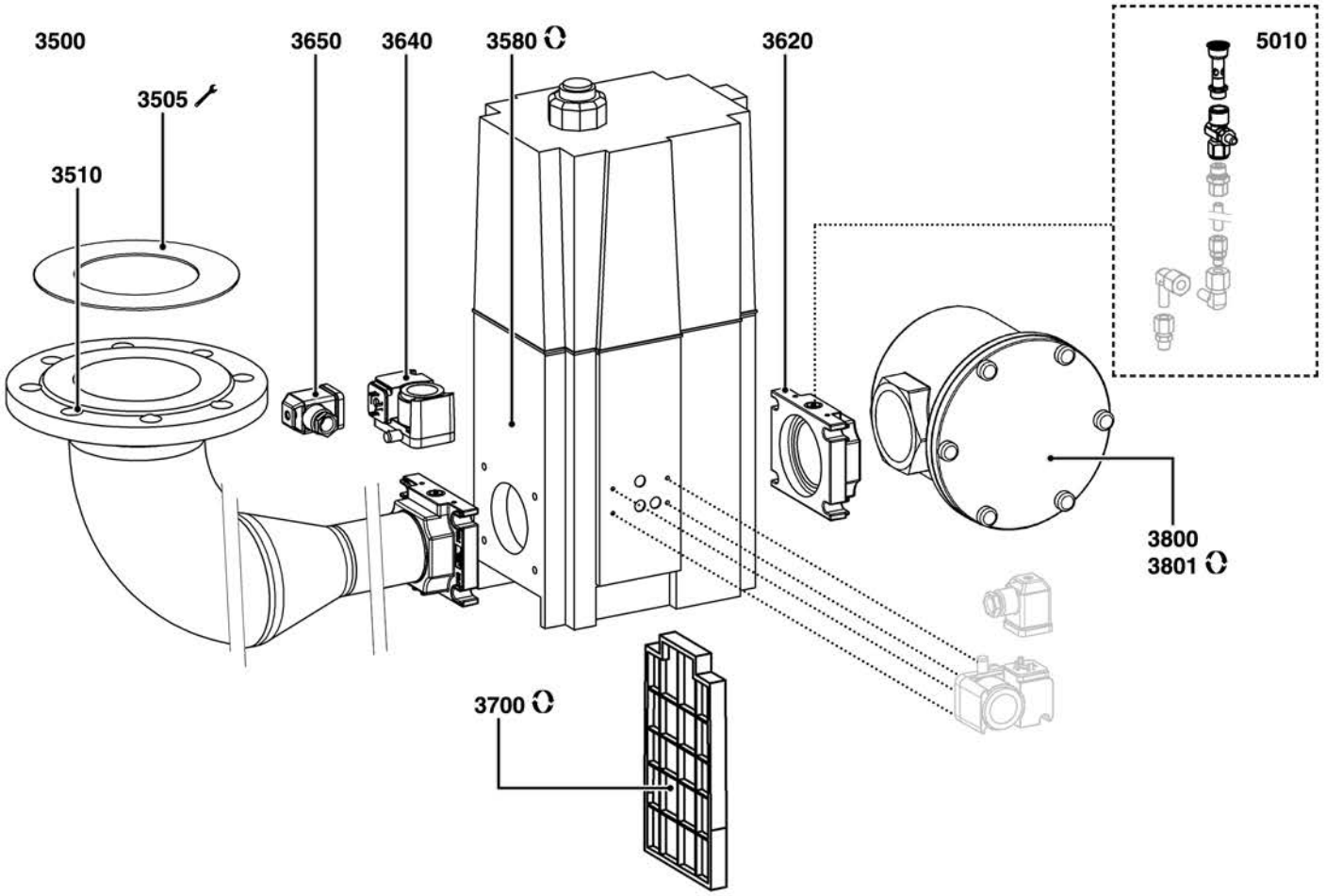
3500
3650
3640
3580
3620
5010
3505
3510
3800
3801
3700

R8220163

	Description	Manf. Pt. N	Type	N 8.5800 GL-E BT3	N 8.7100 GL-E BT3	N 9.8700 GL-E BT3	N 9.10400 GL-E BT3	GT-d457-2	GT-d458-65	GT-d459-80	GT-d460-100	GT-s457-2	GT-s458-65	GT-s459-80	GT-s460-100	GT-s461-125								
				1	2	3	4	5	6	7	8	9	10	11	12	13	14	15	16	17	18	From		to
3000	GAS TRAIN																							
3005	GASKET/GASTRAIN D162/115X2 DN100	65311613										●												
3010	GAS CONNECTION TUBE DN100 / R2 STD.	65311678										●												
3020	STRAIGHT UNION P-GEV 8LR-WD-VI	65311606										●												
3030	ANGLED UNION P-EWV 8-L	65311604										●												
3040	PRESSURE TAP R1/4Z+GASKET	65311579										●												
3060	GAS VALVE VGD20 5011 RP2"	65311581										●												
3070	GAS ACTUATOR SKP25.003E2 W.O.END SWITCH	65107100										●												
3080	CABLE CONNECT AGA 62 PLUG DIN L270	65311585										●												
3090	GAS ACTUATOR SKP15.000E2 W/O END SWITCH	1478836180										●												
3110	FLANGE AGF10.50 RP2	65311377										●												
3120	GAS PRESS.SWITCH GW 150 A6 5-150MB DIN	65323022	OPTION									●												
	GAS PRESS.SWITCH GW 500 A5 30-500MB	65310852	30-500mb									●												
3130	FEMALE CONNECTOR AGA64	65311586										●												
3140	CONNECTOR GDMW 30-11 DF	65311615										●												
3300	GAS FILTER GF80M-1616-A-1 RP2 1BAR	65311459										●												
3301	STRAINER RP 1 1/2+O-RING	65311361										●												
3500	GAS TRAIN																							
3505	GASKET/GASTRAIN D162/115X2 DN100	65311613						●																
3510	GAS CONNECTION TUBE DN100 / RP2	65311973						●																
3580	GAS VALVE MBC1200 SE S82 RP2'' 5-80 MB	65311840						●																
3620	FLANGE MBC700/1200 RP2	65313022						●																
3640	GAS PRESS.SWITCH GW 150 A5 30-150MB	65311598	OPTION					●																
	GAS PRESS.SWITCH GW 500 A5 30-500MB	65310852	30-500mb					●																
3650	CONNECTOR GDMW 30-11 DF	65311615						●																
3700	STRAINER MBC 1200	13022417						●																
3800	GAS FILTER GF80M-1616-A-1 RP2 1BAR	65311459						●																
3801	STRAINER RP 1 1/2+O-RING	65311361						●																
5000	ACCESSORY																							
5010	TRIAL BURNER WITH PUSH-BUTTON PB2	65311362						●				●												

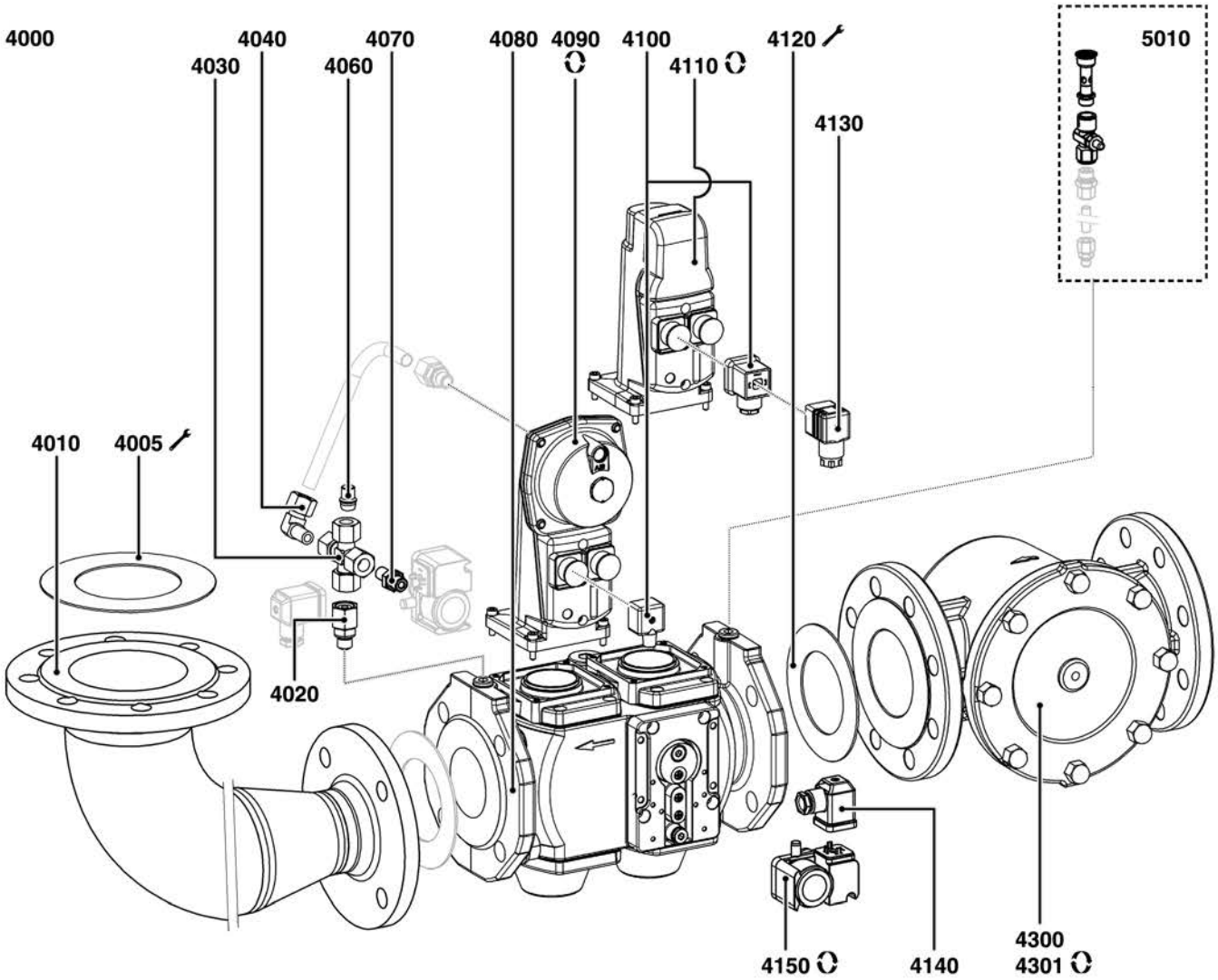
4000
4040
4070
4080
4090
4100
4120
5010
4030
4060
4110
4130
4010
4005
4020
4150
4140
4300
4301

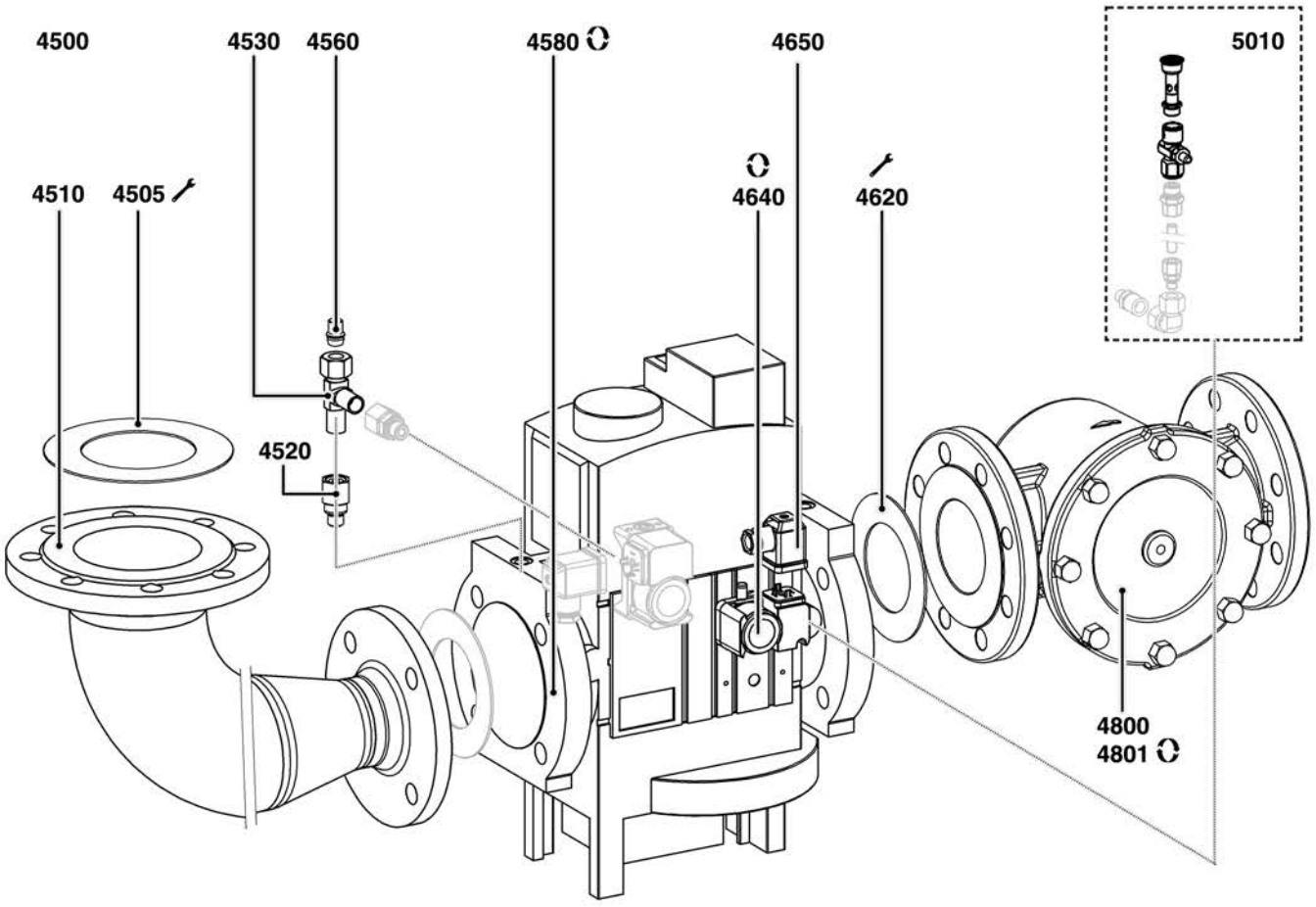
4500
4530
4560
4580
4650
5010
4510
4505
4640
4620
4520
4800
4801

R8220164

	Description	Manf. Pt. N	Type	N 8.5800 GL-E BT3	N 8.7100 GL-E BT3	N 9.8700 GL-E BT3	N 9.10400 GL-E BT3	GT-d457-2	GT-d458-65	GT-d459-80	GT-d460-100	GT-s457-2	GT-s458-65	GT-s459-80	GT-s460-100	GT-s461-125						From	to
				1	2	3	4	5	6	7	8	9	10	11	12	13	14	15	16	17	18		
4000	GAS TRAIN																						
4005	GASKET/GASTRAIN D162/115X2 DN100	65311613											●	●	●	●							
4010	GAS CONNECTION TUBE DN100/DN100	65311676													●								
	GAS CONNECTION TUBE DN100/DN125	65311677														●							
	GAS CONNECTION TUBE DN100/DN65	65311674											●										
	GAS CONNECTION TUBE DN100/DN80	65311675												●									
4020	STRAIGHT UNION P-EGES 12L/R 1/4WD	65311601											●	●	●	●							
4030	UNION ELBOW P-EWV12L-SV	65311608											●	●	●	●							
4040	UNION P-KV12L	65311605											●	●	●	●							
4060	STOPPER D15/10X21 VSD 12L/S O.M.MB	65311607											●	●	●	●							
4070	STRAIGHT UNION P-EGES 12L/R 1/4WD	65311601											●	●	●	●							
4080	GAS VALVE VGD40 065 DN65	65323661											●										
	GAS VALVE VGD40 080 DN80	65311583												●									
	GAS VALVE VGD40 100 DN100	65311590													●								
	GAS VALVE VGD40 125 DN125	65311453														●							
4090	GAS ACTUATOR SKP25.003E2 W.O.END SWITCH	65107100											●	●	●	●							
4100	CABLE CONNECT AGA 62 PLUG DIN L270	65311585											●	●	●	●							
4110	GAS ACTUATOR SKP15.000E2 W/O END SWITCH	1478836180											●	●	●	●							
4120	GASKET/GASTRAIN D127/77X2 DN65	65311611											●										
	GASKET/GASTRAIN D142/90X2 DN80	65311612												●									
	GASKET/GASTRAIN D162/115X2 DN100	65311613													●								
	GASKET/GASTRAIN D192/141X2 DN125	65311614														●							
4130	FEMALE CONNECTOR AGA64	65311586											●	●	●	●							
4140	CONNECTOR GDMW 30-11 DF	65311615											●	●	●	●							
4150	GAS PRESS.SWITCH GW 150 A6 5-150MB DIN	65323022	OPTION										●	●	●	●							
	GAS PRESS.SWITCH GW 500 A5 30-500MB	65310852	30-500mb										●	●	●	●							
4300	GAS FILTER GF100MF-3232-A-1 DN100 1BAR	65311462													●								
	GAS FILTER GF125MF-4040-A-1 DN125 1BAR	65311463														●							
	GAS FILTER GF65MF-2020-A-1 DN65 1BAR	65311460											●										
	GAS FILTER GF80MF-2424-A-1 DN80 1BAR	65311461												●									
4301	STRAINER GF 100 MF	65311889													●								
	STRAINER GF 125 MF	65311890														●							
	STRAINER GF 65 MF	65311723											●										
	STRAINER GF 80 MF	65311888												●									
4500	GAS TRAIN																						
4505	GASKET/GASTRAIN D162/115X2 DN100	65311613							●	●	●												
4510	GAS CONNECTION TUBE DN100/DN100	65311676									●												
	GAS CONNECTION TUBE DN100/DN65	65311674							●														
	GAS CONNECTION TUBE DN100/DN80	65311675								●													
4520	STRAIGHT UNION P-EGES 12L/R 1/4WD	65311601							●	●	●												
4530	T-UNION P-TV 12 L	65311344							●	●	●												
4560	STOPPER D15/10X21 VSD 12L/S O.M.MB	65311607							●	●	●												
4580	GAS VALVE MBC1900 SE DN65 40-80MBAR	65311844							●														
	GAS VALVE MBC3100 SE DN80 40-80 MBAR	65311845								●													
	GAS VALVE MBC5000 SE DN100 40-80 MBAR	65311846									●												
4620	GASKET/GASTRAIN D127/77X2 DN65	65311611							●														
	GASKET/GASTRAIN D142/90X2 DN80	65311612								●													
	GASKET/GASTRAIN D162/115X2 DN100	65311613									●												
4640	GAS PRESS.SWITCH GW 150 A6 5-150MB DIN	65323022	OPTION						●	●	●												
	GAS PRESS.SWITCH GW 500 A5 30-500MB	65310852	30-500mb						●	●	●												
4650	CONNECTOR GDMW 30-11 DF	65311615							●	●	●												
4800	GAS FILTER GF100MF-3232-A-1 DN100 1BAR	65311462									●												
	GAS FILTER GF65MF-2020-A-1 DN65 1BAR	65311460							●														
	GAS FILTER GF80MF-2424-A-1 DN80 1BAR	65311461								●													
4801	STRAINER GF 100 MF	65311889									●												
	STRAINER GF 65 MF	65311723							●														
	STRAINER GF 80 MF	65311888								●													
5000	ACCESSORY																						
5010	TRIAL BURNER WITH PUSH-BUTTON PB2	65311362							●	●	●		●	●	●	●							

5000

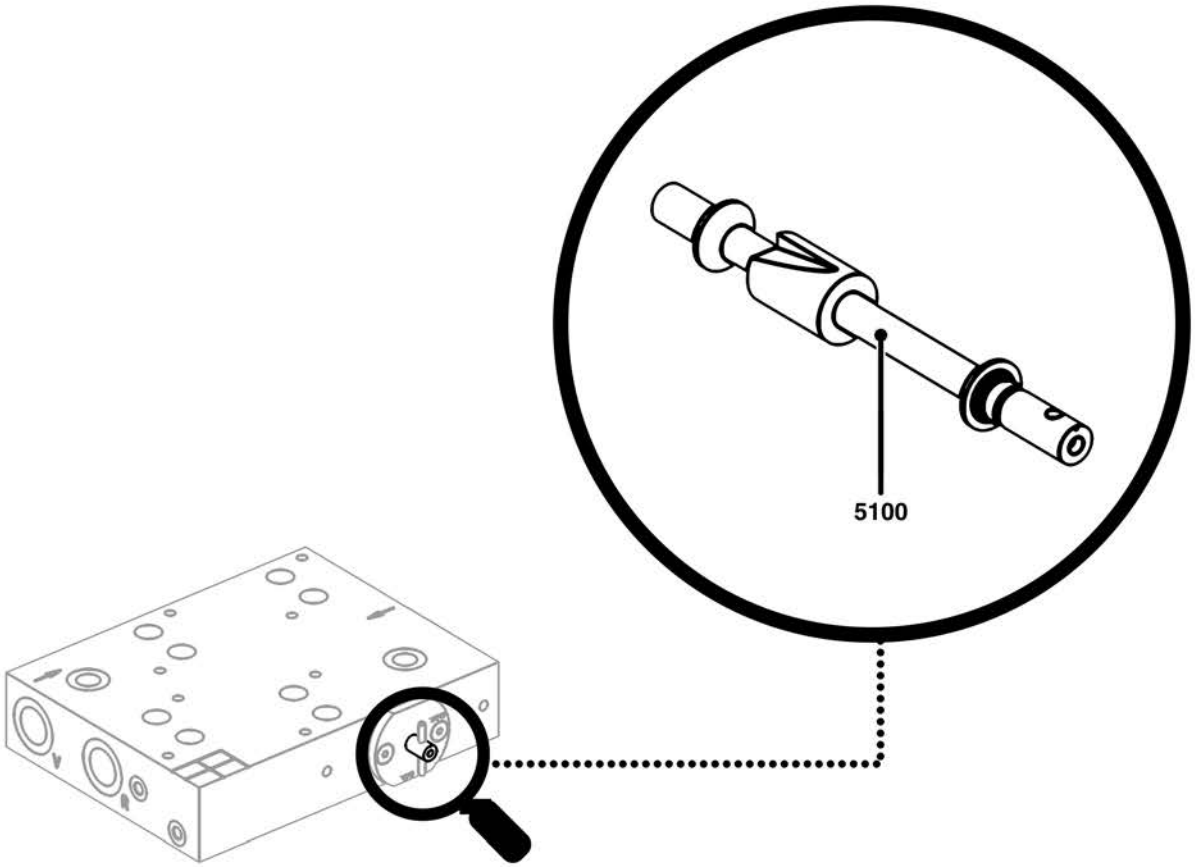

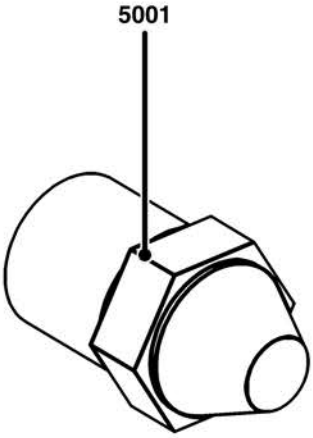

	Description	Manf. Pt. N	Type	N 8.5800 GL-E BT3 (1)	N 8.7100 GL-E BT3 (2)	N 9.8700 GL-E BT3 (3)	N 9.10400 GL-E BT3 (4)	GT-d457-2 (5)	GT-d458-65 (6)	GT-d459-80 (7)	GT-d460-100 (8)	GT-s457-2 (9)	GT-s458-65 (10)	GT-s459-80 (11)	GT-s460-100 (12)	GT-s461-125 (13)	14	15	16	17	18	From	to
5000	ACCESSORY																						
5001	NOZZLE BER 275KG 55° CBM	65313182		●	●																		
	NOZZLE BER 300KG 55° CBM	65313183		●	●																		
	NOZZLE BER 350KG 55° CBM	1458645325		●	●																		
	NOZZLE BER 400KG 55° CBM	1458645347		●	●																		
	NOZZLE BER 450KG 55° CBM	65313184		●	●																		
	NOZZLE BER 500KG 55° CBM	65313185		●	●																		
	NOZZLE BER 550KG 55° CBM	65313851		●																			
	NOZZLE BER 600KG 55° CBM	65313186			●																		
	NOZZLE DZ1000 1000KG 80° M14 1-5	1458698891					●																
	NOZZLE DZ1000 550KG 80° M14 1-5	65313852				●																	
	NOZZLE DZ1000 650KG 80° M14 1-5	65313854				●																	
	NOZZLE DZ1000 700KG 80° M14 1-5	65313853				●	●																
	NOZZLE DZ1000 750KG 80° M14 1-5	1458698846				●	●																
	NOZZLE DZ1000 800KG 80° M14 1-5	65312421				●	●																
	NOZZLE DZ1000 850KG 80° M14 1-5	65313855					●																
	NOZZLE DZ1000 900KG 80° M14 1-5	65313190					●																
	NOZZLE DZ1000 950KG 80° M14 1-5	65311201					●																
5100	CONTROL SHAFT 5.0 LEFT HAND.	65312302		●	●																		
	CONTROL SHAFT 6.0 LEFT HAND.	65312303		●	●																		
	CONTROL SHAFT 7.0 LEFT HAND.	65312304		●	●																		
	CONTROL SHAFT 7.0 LEFT HAND. GR.2	65312292				●	●																
	CONTROL SHAFT 8.0 LEFT HAND.	65312305		●	●																		
	CONTROL SHAFT 8.0 LEFT HAND. GR.2	65312285					●																
	CONTROL SHAFT 9.0 LEFT HAND. GR.2	65312293					●																

	6XXXXXXX	DE NL	FR ES	IT	X
1010	65311967	FLANSCH 37X62X15 D12 KFL001 FLENS 37X62X15 D12 KFL001	BRIDE 37X62X15 D12 KFL001 BRIDA 37X62X15 D12 KFL001	FLANGIA 37X62X15 D12 KFL001	1
1015	65311657	VERSTELLANZEIGER LUFTKLAPPE INDICATOR LUCHTKLEP	INDICATEUR POSITION VOLET AIR INDICADOR VALVULA AIRE	INDICE POSIZIONE SERRANDA ARIA	1
1020	65311689	STELLANTRIEB HALTER / LUFTKLAPPE STEUN REGELMOTOR / LUCHTKLEP	SUPPORT SERVOMOTEUR / VOLET AIR SOPORTE SERVOMOTOR / VALVULA AIRE	SUPPORTO SERVOMOTORE / SERRANDA ARIA	1
1030	65311650	STELLANTRIEB STE 4,5 Q3.51/6+KABEL L3000 SERVOMOTOR STE 4,5 Q3.51/6+KABEL L3000	SERVOMOTEUR STE 4,5 Q3.51/6+CABLE L3000 SERVOMOTOR STE 4,5 Q3.51/6+CABLE L3000	SERVOMOTORE STE 4,5 Q3.51/6+CAVO L3000	1
	65311833	STELLANTRIEB STM 40 Q15.51/8 2NR REGELMOTOR STM 40 Q15.51/8 2NR	SERVOMOTEUR STM 40 Q15.51/8 2NR SERVOMOTOR STM 40 Q15.51/8 2NR	SERVOMOTORE STM 40 Q15.51/8 2NR	1
1035	1658418384	INDUKT. NÄHERUNGSSCHALTER NAMUR D14 SENSOR NAMUR D14, B12/G12/Y1	CAPTEUR NAMUR D14 SENSOR NAMUR D14	SENSORE NAMUR D14	1
1040	65311665	ANSAUGTRICHTER D332 X 127,5 LUCHTINLAAT D332x127,5	RECYCLAGE AIR D332X127,5 ENTRADA DE AIRE D332x127,5	CONVOGLIATORE D332x127,5	1
	65311672	ANSAUGTRICHTER D318 X 134 LUCHTINLAAT D318x134	RECYCLAGE AIR D318X134 ENTRADA DE AIRE D318x134	CONVOGLIATORE D318x134	1
	65311673	ANSAUGTRICHTER D288 X 127 LUCHTINLAAT D288x127	RECYCLAGE AIR D288X127 ENTRADA DE AIRE D288x127	CONVOGLIATORE D288x127	1
	65311715	ANSAUGTRICHTER D344X126 LUCHTINLAAT D344x126	RECYCLAGE AIR D344X126 ENTRADA DE AIRE D344x126	CONVOGLIATORE D344x126	1
1050	1180603227	SCHAUGLAS F.MONOBL.KLAR D55X21 KIJKGLAS D55X21	VERRE DE REGARD D55x21 CLAIR MIRILLA INCOLORA D55X21	SPIONCINO INCOLORE D55X21	1
1060	1188052260	SCHAUGLASDECKEL Z.MONOBL.55X61 DEKSEL/KIJKGLAS D55X61	CACHE REGARD D55X61 TAPA/MIRILLA D55X61	COPERCHIO/SPIONCINO D55X61	1
1070	1180559591	MUTTER SCHAUGLAS M48X1,5 SW60 MOER/KIJKGLAS M48X1,5 SW60	ECROU REGARD M48X1,5 SW60 TUERCA/MIRILLA M48X1,5 SW60	DADO/SPIONCINO M48X1,5 SW60	1
1080	65311670	VENTILATORRAD D556/320X86 D42 VENTILATORWIEL D556/320X86 D42	TURBINE D556/320X86 D42 TURBINA D556/320X86 D42	VENTOLA D556/320X86 D42	1
	65311716	VENTILATORRAD D533/290X83 D42 VENTILATORWIEL D533/290X83 D42	TURBINE D533/290X83 D42 TURBINA D533/290X83 D42	VENTOLA D533/290X83 D42	1
	65311717	VENTILATORRAD D590/334X92 D42 VENTILATORWIEL D590/334X92 D42	TURBINE D590/334X92 D42 TURBINA D590/334X92 D42	VENTOLA D590/334X92 D42	1
	65311718	VENTILATORRAD D600/346X93 D48 VENTILATORWIEL D600/346X93 D48	TURBINE D600/346X93 D48 TURBINA D600/346X93 D48	VENTOLA D600/346X93 D48	1
1090	65311471	ZUENDTRAFO EBI 1X11 230V ONTSTEKINGSTRAFO EBI 1X11 230V	ALLUMEUR EBI 1X11 230V ENCENDEDOR EBI 1X11 230V	TRASFORMATORE ACCENSIONE EBI 1X11 230V	1
1091	1738733651	ZUENDTRAFO ZA 20 140 E21 2005.0450.073 ONTSTEKINGSTRAFO ZA20 140E21 REP.ZM20/14	ALLUMEUR ZA 20 140 E21 REMPLACE ZM20/14 ENCENDEDOR ZA 20 140 E21 REP.ZM20/14	TRASFO. ACC. ZA 20 140 E21 SOS.ZM20/14	1
1095	13019357	KOMPAKTFLAMMENWAECHTER D-LX100 EK-S (IR) FOTOCEL D-LX100 EK-S (IR)	CELLULE D-LX100 EK-S (IR) CELULA D-LX100 EK-S (IR)	FOTOCELLULA D-LX100 EK-S (IR)	1
	65312274	FLAMMENFUEHLER FFS08-UV1 659D31 - 5M FOTOCEL FFS08-UV1 659D31 - 5M W/O	CELLULE FFS08-UV1 659D31 - 5M W/O CELULA FFS08-UV1 659D31 - 5M W/O	CELLULA FFS08-UV1 659D31 - 5M W/O	1
1100	65311472	SICHTSPIEGEL FÜR SCHAUGLAS SPIEGEL/KIJKGLAS	MIROIR/REGARD ESPEJO/MIRILLA	SPECCHIO/SPIONCINO	1
1110	65311595	DRUCKWAECHTER LGW 50 A2P 2,5-50MBAR DRUKSCHAKELAAR LGW 50 A2P 2,5-50MBAR	MANOSTAT AIR LGW 50 A2P 2,5-50MB PRESOSTATO AIRE LGW 50 A2P 2,5-50MB	PRESSOSTATO ARIA LGW 50 A2P 2,5-50MB	1
1120	65310688	RINGDROSSELKLAPPE BVG 100 Z05 Z GASKLEP BVG D100 Z05 Z	CLAPET GAZ ASS. D100 Z05 Z VALVOLA DEL GAS ENSAMB. D100 Z05 Z	VALVOLA DEL GAS ASS. D100 Z05 Z	1
1130	65311659	DISTANZBOLZEN SW13X55 AFSTANDHOUDER SW13X55	ENTRETOISE SW13X55 DISTANCIADOR SW13X55	DISTANZIATORE SW13X55	1
1140	65311658	STELLANTRIEB HALTER / GASKLAPPE STEUN REGELMOTOR / GASKLEP	SUPPORT SERVOMOTEUR / CLAPET GAZ SOPORTE SERVOMOTOR / VALVOLA DEL GAS	SUPPORTO SERVOMOTORE / VALVOLA DEL GAS	1
1150	65311660	KUPPLUNG GASKLAPPE N8 / N9 KOPPELING GASKLEP / REGELMOTOR STE N8-N9	ACCOUPLEMENT CLAPET GAZ/SERVOM.STE N8-N9 ACOPLAMIENT.VALVOLA GAS/SERVOM.STE N8-N9	GIUNTO VALVOLA GAS/SERVOMOTORE STE N8-N9	1
1160	65311650	STELLANTRIEB STE 4,5 Q3.51/6+KABEL L3000 SERVOMOTOR STE 4,5 Q3.51/6+KABEL L3000	SERVOMOTEUR STE 4,5 Q3.51/6+CABLE L3000 SERVOMOTOR STE 4,5 Q3.51/6+CABLE L3000	SERVOMOTORE STE 4,5 Q3.51/6+CAVO L3000	1
	65311833	STELLANTRIEB STM 40 Q15.51/8 2NR REGELMOTOR STM 40 Q15.51/8 2NR	SERVOMOTEUR STM 40 Q15.51/8 2NR SERVOMOTOR STM 40 Q15.51/8 2NR	SERVOMOTORE STM 40 Q15.51/8 2NR	1
1170	65326333	MOTOR 11KW 400/690V D42 IE3 ELV SCHWARZ MOTOR 11KW 400/690V D42 IE3 ELV ZWART	MOTEUR 11KW 400/690V D42 IE3 ELV NOIR MOTOR 11KW 400/690V D42 IE3 ELV NEGRO	MOTORE 11KW 400/690V D42 IE3 ELV NERO	1
	65326334	MOTOR 15KW 400/690V D42 IE3 ELV SCHWARZ MOTOR 15KW 400/690V D42 IE3 ELV ZWART	MOTEUR 15KW 400/690V D42 IE3 ELV NOIR MOTOR 15KW 400/690V D42 IE3 ELV NEGRO	MOTORE 15KW 400/690V D42 IE3 ELV NERO	1
	65326335	MOTOR 18,5KW 400/690V D42 IE3 ELV SCHWZ MOTOR 18,5KW 400/690V D42 IE3 ELV ZWART	MOTEUR 18,5KW 400/690V D42 IE3 ELV NOIR MOTOR 18,5KW 400/690V D42 IE3 ELV NEGRO	MOTORE 18,5KW 400/690V D42 IE3 ELV NERO	1
	65326336	MOTOR 22KW 400/690V D48 IE3 ELV SCHWARZ MOTOR 22KW 400/690V D48 IE3 ELV ZWART	MOTEUR 22KW 400/690V D48 IE3 ELV NOIR MOTOR 22KW 400/690V D48 IE3 ELV NEGRO	MOTORE 22KW 400/690V D48 IE3 ELV NERO	1
1180	65311502	MAGNET FÜR HAUBE MAGNEET FEST BRANDERKAP	AIMANT FIXE CAPOT BRULEUR IMÁN FIJO CUBIERTA QUEMADOR	MAGNETE FISSA COFANO BRUCIATORE	1
1190	65311714	VERBINDUNGSTANGE CS10 L200 VERBINDINGSTANG CS10 L200	TIGE DE LIAISON CS10 L200 VARILLA DE CONEXION CS10 L200	ASTA COLLEGAMENTO CS10 L200	1
1200	65311686	WELLE / LUFTKLAPPE D12X673 D4H7 AS / LUCHTKLEP D12X673 D4H7	AXE / VOLET AIR D12X673 D4H7 EJE / VALVULA AIRE D12X673 D4H7	PERNO / SERRANDA ARIA D12X673 D4H7	1

	6XXXXXXX	DE NL	FR ES	IT	X
1210	65311701	ZAHNRAD Z=100 M=1 BO=12MM MIT BOHRG. 6MM TANDWIEL Z=100 M=1 BO=12MM /BORG. 6 MM	ROUE DENTEE Z=100 M=1 BO=12MM /BORG. 6MM RUEDA DENTAD.Z=100 M=1 BO=12MM /BORG.6MM	RUOTA DENTAT. Z=100 M=1 BO=12MM/BORG.6MM	1
1220	65311685	WELLE / LUFTKLAPPE D12X670 D4H7 AS / LUCHTKLEP D12X670 D4H7	AXE / VOLET AIR D12X670 D4H7 EJE / VALVULA AIRE D12X670 D4H7	PERNO / SERRANDA ARIA D12X670 D4H7	1
1225	65311687	WELLE / LUFTKLAPPE D12X705 M8 + ZEIGER AS / LUCHTKLEP D12X705 M8 + ADVIES	AXE / VOLET AIR D12X705 M8 + INDEX EJE / VALVULA AIRE D12X705 M8 + PUNTERO	PERNO/SERRANDA ARIA D12X705 M8 + INDICE	1
1226	65311688	WELLE / LUFTKLAPPE D12X705 + ZEIGER AS / LUCHTKLEP D12X705 + ADVIES	AXE / VOLET AIR D12X705 + INDEX EJE / VALVULA AIRE D12X705 + PUNTERO	PERNO / SERRANDA ARIA D12X705 + INDICE	1
1230	65311684	LUFTKLAPPE LUCHTKLEP	VOLET AIR VALVULA AIRE	SERRANDA ARIA	1
1605	65311789	ADAPTER BT300/DFM300 RAST5 ADAPTER BT300/DFM300 RAST5	ADAPTATEUR BT300/DFM300 RAST5 ADAPTADOR BT300/DFM300 RAST5	ADATTATORE BT300/DFM300 RAST5	1
1610	65311790	LCM100 (LSB-M 667R0500-1) LCM100-MODULE (LSB-M 667R0500-1)	MODULE LCM100 (LSB-M 667R0500-1) MÓDULO LCM100 (LSB-M 667R0500-1)	MODULO LCM100 (LSB-M 667R0500-1)	1
1615	65311791	DFM300 (LSB-M 667R0600-1) DFM300-MODULE (LSB-M 667R0600-1)	MODULE DFM300 (LSB-M 667R0600-1) MÓDULO DFM300 (LSB-M 667R0600-1)	MODULO DFM300 (LSB-M 667R0600-1)	1
1620	65311449	DURCHGANGSKLEMME WAGO (GRAU) 2001-1401 DOORVERBINDINGSKLEM WAGO GRIJS 2001-1401	BORNE DE JONCTION WAGO (GRIS) 2001-1401 BORNE DE PASO WAGO (GRIS) 2001-1401	MORSETTO PASSANTE WAGO (GRIGIO)2001-1401	1
1625	65311447	DURCHGANGSKLEMME WAGO (NEUTRAL)2001-1404 DOORVERBINDINGSKLEM WAGO (N) 2001-1404	BORNE DE JONCTION WAGO (NEUTRE)2001-1404 BORNE DE PASO WAGO (NEUTRO) 2001-1404	MORSETTO PASSANTE WAGO (NEUTRO)2001-1404	1
1626	65311445	DURCHGANGSKLEMME WAGO (PE) 2001-1407 DOORVERBINDINGSKLEM WAGO (PE) 2001-1407	BORNE DE JONCTION WAGO (TERRE) 2001-1407 BORNE DE PASO WAGO (PE) 2001-1407	MORSETTO PASSANTE WAGO (TERRA) 2001-1407	1
1640	65311446	WAG BETAETIGUNGSWERKZEUG 2009-309 BEDIENINGSGEREEDSCHAP WAG 2009-309	OUTIL DE MANOEUVRE WAG 2009-309 HERRAMIENTA D.ACCIONAM. WAG 2009-309	DISPOSITIVO DI MANOVRA WAG 2009-309	1
1645	65311793	MOTORSCHUETZ SCH D 3-4KW LC1D09P7 CONTACT MOTOR SCH D 3-4kW LC1D09P7	CONTACTEUR MOTEUR SCH D 3-4kW LC1D09P7 CONTACTOR DE MOTOR SCH D 3-4kW LC1D09P7	CONTATTORE MOTORE SCH D 3-4kW LC1D09P7	1
1650	65311794	MOTORSCHUTZSCHALTER 3-4KW GV2ME14 VERMOGENSCHAKEL. MOTOR 3-4KW GV2ME14	DISJONCTEUR MOTEUR 3-4KW GV2ME14 INTERRUPTOR MOTOR 3-4KW GV2ME14	INTERRUTTORE MOTORE 3-4KW GV2ME14	1
1651	65311795	HILFSSCHALTER GVAE11 HULPSCHAKELAAR GVAE11	CONTACT AUXILIAIRE GVAE11 INTERRUPTOR AUXILIAR GVAE11	INTERRUTTORE AUSILIARIO GVAE11	1
1655	65311796	MOTORSTARTER Y/D 18KW LC3D18AP7 MOTOR STARTER Y/D 18KW LC3D18AP7	DEMARREUR MOT. ET./TRI. 18KW LC3D18P7 ARRANQUE MOTOR Y/D 18KW LC3D18AP7	AVVIATORE STELLA/TRIA. 18KW LC3D18P7	1
	65311797	MOTORSTARTER Y/D 22KW LC3D32AP7 MOTOR STARTER Y/D 22KW LC3D32AP7	DEMARREUR MOT. ET./TRI. 22KW LC3D32AP7 ARRANQUE MOTOR Y/D 22KW LC3D32AP7	AVVIATORE STELLA/TRIA. 22KW LC3D32AP7	1
	65312015	MOTORSTARTER Y/D 11KW LC3D12AP7 MOTOR STARTER Y/D 11KW LC3D12AP7	DEMARREUR MOT. ET./TRI. 11KW LC3D12AP7 ARRANQUE MOTOR Y/D 11KW LC3D12AP7	AVVIATORE STELLA/TRIA. 11KW LC3D12AP7	1
1660	65311798	MOTORSCHUTZSCHALTER 15KW GV2ME32 VERMOGENSCHAKEL. MOTOR 15KW GV2ME32	DISJONCTEUR MOTEUR 15KW GV2ME32 INTERRUPTOR MOTOR 15KW GV2ME32	INTERRUTTORE MOTORE 15KW GV2ME32	1
	65311917	MOTORSCHUTZSCHALTER 22KW GV3P50 VERMOGENSCHAKEL. MOTOR 22KW GV3P50	DISJONCTEUR MOTEUR 22KW GV3P50 INTERRUPTOR MOTOR 22KW GV3P50	INTERRUTTORE MOTORE 22KW GV3P50	1
	65312018	MOTORSCHUTZSCHALTER 11KW GV2ME22 VERMOGENSCHAKEL. MOTOR 11KW GV2ME22	DISJONCTEUR MOTEUR 11KW GV2ME22 INTERRUPTOR MOTOR 11KW GV2ME22	INTERRUTTORE MOTORE 11KW GV2ME22	1
	65312019	MOTORSCHUTZSCHALTER 18,5KW GV3P40 VERMOGENSCHAKEL. MOTOR 18,5KW GV3P40	DISJONCTEUR MOTEUR 18,5KW GV3P40 INTERRUPTOR MOTOR 18,5KW GV3P40	INTERRUTTORE MOTORE 18,5KW GV3P40	1
1661	65311795	HILFSSCHALTER GVAE11 HULPSCHAKELAAR GVAE11	CONTACT AUXILIAIRE GVAE11 INTERRUPTOR AUXILIAR GVAE11	INTERRUTTORE AUSILIARIO GVAE11	1
1665	65311919	GERAETETRAEGER 3-FACH M22-A APPARATENHOUDER, 3-VOUDIG M22-A	SUPPORT EQUIPEMENT, 3 NIVEAUX M22-A SOPORTE PARA APARATO, 3 NIVELES M22-A	SUPPORTO STRUMENTI, 3 LIVELLI M22-A	1
1666	65311443	DURCHGANGSKLEMME WAGO (GRAU) 2001-1201 DOORVERBINDINGSKLEM WAGO GRIJS 2001-1201	BORNE DE JONCTION WAGO (GRIS) 2001-1201 BORNE DE PASO WAGO (GRIS) 2001-1201	MORSETTO PASSANTE WAGO (GRIGIO)2001-1201	1
1667	65311444	DURCHGANGSKLEMME WAGO (PE) 2001-1207 DOORVERBINDINGSKLEM WAGO (PE) 2001-1207	BORNE DE JONCTION WAGO (TERRE) 2001-1207 BORNE DE PASO WAGO (PE) 2001-1207	MORSETTO PASSANTE WAGO (TERRA) 2001-1207	1
1670	65311920	LED-W FRONTBEF. M22-CLED230-WS LED-ELEMENT, WIT M22-CLED230	ELEMENT LED, BLANC M22-CLED230 ELEMENTO LED, BLANCO M22-CLED230	ELEMENTO A LED, BIANCO M22-CLED230	1
	65311921	KONT. OE FRONTBEF. M22 -CK01 VERBREEKCONTACT M22 -CK01	CONTACT A OUVERTURE M22 -CK01 CONTACTO DE APERTURA M22 -CK01	CONTATTO DI APERTURA M22 -CK01	1
	65311922	DOPPELKONT. 2OE FRONTBEF. M22-CK02 DUBBEL VERBREEKCONTACT M22-CK02	CONTACT A DOUBLE OUVERTURE M22-CK02 CONTACTO DE APERTURA DOBLE M22-CK02	CONTATTO A DOPPIA APERTURA M22-CK02	1
	65311923	KONT. S FRONTBEF. M22-CK10 MAAKCONTACT M22-CK10	CONTACT A FERMETURE M22-CK10 CONTACTO DE CIERRE M22-CK10	CONTATTO DI CHIUSURA M22-CK10	1
	65311924	DOPPELKONT. 2S FRONTBEF. M22-CK20 DUBBEL MAAKCONTACT M22-CK20	CONTACT A DOUBLE FERMETURE M22-CK20 CONTACTO DE CIERRE DOBLE M22-CK20	CONTATTO A DOPPIA CHIUSURA M22-CK20	1
1675	65312454	FEUERUNGSAUTOMAT BT340 GL-E BRANDERAUTOMAAT BT340 GL-E	COFFRET BT340 GL-E PROGRAMADOR BT340 GL-E	APPARECCHIATURA BT340 GL-E	1
1676	65311926	LAMTEC BT300-BLINDABD.X30-X34 667R0001 BLINDE AFDEKKING X30-X34 667R0001	CACHE X30-X34 667R0001 CUBIERTA X30-X34 667R0001	COPERTURA SCHERMATA X30-X34 667R0001	1
1680	65311927	DURCHGANGSKLEMME WAGO (ORANGE) 2001-1402 DOORVERBINDINGSKLEM WAGO ORANGE2001-1402	BORNE DE JONCTION WAGO (ORANGE)2001-1402 BORNE DE PASO WAGO (NARANJA) 2001-1402	MORSETTO PASSANTE WAGO(ARANCIO)2001-1402	1
1685	65311445	DURCHGANGSKLEMME WAGO (PE) 2001-1407 DOORVERBINDINGSKLEM WAGO (PE) 2001-1407	BORNE DE JONCTION WAGO (TERRE) 2001-1407 BORNE DE PASO WAGO (PE) 2001-1407	MORSETTO PASSANTE WAGO (TERRA) 2001-1407	1
1690	65311449	DURCHGANGSKLEMME WAGO (GRAU) 2001-1401 DOORVERBINDINGSKLEM WAGO GRIJS 2001-1401	BORNE DE JONCTION WAGO (GRIS) 2001-1401 BORNE DE PASO WAGO (GRIS) 2001-1401	MORSETTO PASSANTE WAGO (GRIGIO)2001-1401	1

	6XXXXXXX	DE NL	FR ES	IT	X
1695	65311447	DURCHGANGSKLEMME WAGO (NEUTRAL)2001-1404 DOORVERBINDINGSKLEM WAGO (N) 2001-1404	BORNE DE JONCTION WAGO (NEUTRE)2001-1404 BORNE DE PASO WAGO (NEUTRO) 2001-1404	MORSETTO PASSANTE WAGO (NEUTRO)2001-1404	1
1700	65311451	KABELVERSCHRAUBUNG M16 PAKKINGBUS M16	PRESSE-ETOUPE M16 PRENSAESTOPAS M16	PREMISTOPPA M16	1
1701	65311758	KABELVERSCHRAUBUNG M20 PAKKINGBUS M20	PRESSE-ETOUPE M20 PRENSAESTOPAS M20	PREMISTOPPA M20	1
	65311759	KABELVERSCHRAUBUNG M25 PAKKINGBUS M25	PRESSE-ETOUPE M25 PRENSAESTOPAS M25	PREMISTOPPA M25	1
1705	65311443	DURCHGANGSKLEMME WAGO (GRAU) 2001-1201 DOORVERBINDINGSKLEM WAGO GRIJS 2001-1201	BORNE DE JONCTION WAGO (GRIS) 2001-1201 BORNE DE PASO WAGO (GRIS) 2001-1201	MORSETTO PASSANTE WAGO (GRIGIO)2001-1201	1
1710	65311441	DURCHGANGSKLEMME WAGO (ORANGE) 2001-1202 DOORVERBINDINGSKLEM WAGO ORANGE2001-1202	BORNE DE JONCTION WAGO (ORANGE)2001-1202 BORNE DE PASO WAGO (NARANJA) 2001-1202	MORSETTO PASSANTE WAGO(ARANCIO)2001-1202	1
1715	65311931	LEITG.SCHUTZS BA 1P SCHNEIDER 23614 ZEKERING 1P SCHNEIDER 23614	COUPE-CIRCUIT AUTOMATIQUE 1P SCHNEIDER 2 FUSIBLE AUTOMÁTICO	INTERRUTTORE AUTOMATICO 1P SCHNEIDER 236	1
1716	65311932	KLEMMLEISTE WAGO STRG. N6-9 GL-E BT KLEMMENSTROOK WAGO STRG. N6-9 GL-E BT	BORNIER WAGO STRG. N6-9 GL-E BT REGLETA DE BORNES WAGO STRG.N6-9 GL-E BT	MORSETTIERA WAGO STRG. N6-9 GL-E BT	1
1720	65311933	KABELVERSCHRAUBUNG M.RED. M32X1.5 SW PAKKINGBUS M32X1,5	PRESSE-ETOUPE M32X1,5 PRENSAESTOPAS M32X1,5	PREMISTOPPA M32X1,5	1
	65311934	KABELVERSCHRAUBUNG M.RED. M40X1.5 SW PAKKINGBUS M40X1,5	PRESSE ETOUPE A VIS M40X1,5 PRENSAESTOPAS M40X1,5	PREMISTOPPA A VIS M40X1,5	1
1725	65311935	REDUZIERST.SKINDICHT KU-M M40X1.5/32X1.5 REDUCEERD. SKINDICHT KU-M M40x1,5/32X1.5	REDUCTEUR SKINDICHT KU-M M40x1,5/32X1.5 REDUCTOR SKINDICHT KU-M M40x1,5/32X1.5	RIDUTTORE SKINDICHT KU-M M40x1,5/32X1.5	1
1730	65311936	GEGENMUTTER MS M40X1.5 CONTRAMOER M40X1,5	CONTRE-ECROU M40X1,5 CONTRATUERCA M40X1,5	CONTRODADO M40X1,5	1
1731	65311937	DURCHGANGSKLEMME WAGO (GRAU) 2010-1301 DOORVERBINDINGSKLEM WAGO GRIJS 2010-1301	BORNE DE JONCTION WAGO (GRIS) 2010-1301 BORNE DE PASO WAGO (GRIS) 2010-1301	MORSETTO PASSANTE WAGO (GRIGIO)2010-1301	1
	65311938	DURCHGANGSKLEMME WAGO (GRAU) 2016-1301 DOORVERBINDINGSKLEM WAGO GRIJS 2016-1301	BORNE DE JONCTION WAGO (GRIS) 2016-1301 BORNE DE PASO WAGO (GRIS) 2016-1301	MORSETTO PASSANTE WAGO (GRIGIO)2016-1301	1
	65312106	DURCHGANGSKLEMME WAGO (GRAU) 2006-1301 DOORVERBINDINGSKLEM WAGO GRIJS 2006-1301	BORNE DE JONCTION WAGO (GRIS) 2006-1301 BORNE DE PASO WAGO (GRIS) 2006-1301	MORSETTO PASSANTE WAGO (GRIGIO)2006-1301	1
1732	65311939	DURCHGANGSKLEMME WAGO (PE) 2016-1307 DOORVERBINDINGSKLEM WAGO (PE) 2016-1307	BORNE DE JONCTION WAGO (TERRE) 2016-1307 BORNE DE PASO WAGO (PE) 2016-1307	MORSETTO PASSANTE WAGO (TERRA) 2016-1307	1
	65312040	DURCHGANGSKLEMME WAGO (PE) 2010-1307 DOORVERBINDINGSKLEM WAGO (PE) 2010-1307	BORNE DE JONCTION WAGO (TERRE) BORNE DE PASO WAGO (PE) 2010-1307	MORSETTO PASSANTE WAGO (TERRA)	1
	65312107	DURCHGANGSKLEMME WAGO (PE) 2006-1307 DOORVERBINDINGSKLEM WAGO (PE) 2006-1307	BORNE DE JONCTION WAGO (TERRE) 2006-1307 BORNE DE PASO WAGO (PE) 2006-1307	MORSETTO PASSANTE WAGO (TERRA) 2006-1307	1
1735	65311436	EATON SCHALTER 3 ST. R M22-WRLK3-W VERLICHTE KEUZESCHAK., 3STANDEN, BLOKK.	SELECTEUR RETRO-ECL., 3 POS.,VERROUILL. BOTÓN DE SELEC. LUMIN., 3 NIVELES, ENCAJ	TASTO DI SELEZ. ILLUM., A 3 STADI, STABI	1
1740	65311437	EATON SCHALTER 3 ST. T M22-WLK3-W VERLICHTE KEUZESCHAK., 3STANDEN, BLOKK.	SELECTEUR RETRO-ECL., 3 POS.,VERROUILL. BOTÓN DE SELEC. LUMIN., 3 NIVELES, ENCAJ	TASTO DI SELEZ. ILLUM., A 3 STADI, STABI	1
1745	65326869	ANZEIGE FUR FEUERUNGSAUTOMAT BT3XX DISPLAY VOOR BRANDERAUTOMAAT BT3XX	AFFICHEUR POUR COFFRET BT3XX PANTALLA PARA PROGRAMADOR BT3XX	DISPLAY PER APPARECCHIATURA BT3XX	1
1750	65311364	DICHTUNG/ANZEIGE 152/140X80/70X2 PAKKING/DISPLAY 152/140X80/70X2	JOINT/AFFICHEUR 152/140X80/70X2 JUNTA/PANTALLA 152/140X80/70X2	GUARNIZIONE/DISPLAY 152/140X80/70X2	1
1755	65311438	EATON SCHALTER 2 ST. R M22-WRLK-W VERLICHTE KEUZESCHAK., 2STANDEN, BLOKK.	SELECTEUR RETRO-ECL., 2 POS.,VERROUILL. BOTÓN DE SELEC. LUMIN., 2 NIVELES, ENCAJ	TASTO DI SELEZ. ILLUM., A 2 STADI, STABI	1
2020	65312078	BRENNERROHR D369/400/320 L617 BRANDERBUIS D369/400/320 L617	TUBE DE FLAMME D369/400/320 L617 TUBO DE LLAMA D369/400/320 L617	BOCCAGLIO D369/400/320 L617	1
	65312079	BRENNERROHR D369/400/320 L757 BRANDERBUIS D369/400/320 L757	TUBE DE FLAMME D369/400/320 L757 TUBO DE LLAMA D369/400/320 L757	BOCCAGLIO D369/400/320 L757	1
	65312080	BRENNERROHR D369/400/320 L897 BRANDERBUIS D369/400/320 L897	TUBE DE FLAMME D369/400/320 L897 TUBO DE LLAMA D369/400/320 L897	BOCCAGLIO D369/400/320 L897	1
	65312081	BRENNERROHR D369/415/351 L638 BRANDERBUIS D369/415/351 L638	TUBE DE FLAMME D369/415/351 L638 TUBO DE LLAMA D369/415/351 L638	BOCCAGLIO D369/415/351 L638	1
	65312082	BRENNERROHR D369/415/351 L778 BRANDERBUIS D369/415/351 L778	TUBE DE FLAMME D369/415/351 L778 TUBO DE LLAMA D369/415/351 L778	BOCCAGLIO D369/415/351 L778	1
	65312083	BRENNERROHR D369/415/351 L918 BRANDERBUIS D369/415/351 L918	TUBE DE FLAMME D369/415/351 L918 TUBO DE LLAMA D369/415/351 L918	BOCCAGLIO D369/415/351 L918	1
	65312084	BRENNERROHR D431,5/373 L408 BRANDERBUIS D431,5/373 L408	TUBE DE FLAMME D431,5/373 L408 TUBO DE LLAMA D431,5/373 L408	BOCCAGLIO D431,5/373 L408	1
	65312085	BRENNERROHR D431,5/373 L558 BRANDERBUIS D431,5/373 L558	TUBE DE FLAMME D431,5/373 L558 TUBO DE LLAMA D431,5/373 L558	BOCCAGLIO D431,5/373 L558	1
	65312086	BRENNERROHR D431,5/373 L708 BRANDERBUIS D431,5/373 L708	TUBE DE FLAMME D431,5/373 L708 TUBO DE LLAMA D431,5/373 L708	BOCCAGLIO D431,5/373 L708	1
2110	65311881	DRALLSTAUSCHEIBE D330/74 BEF.230MM 45GRD STUWPLAAT D330/74 BEF.230MM	DEFLECTEUR D330/74 BEF.230MM DEFLECTOR D330/74 BEF.230MM	DIFFUSORE D330/74 BEF.230MM	1
	65312087	DRALLSTAUSCHEIBE D320/74X67 20SL STUWPLAAT D320/74X67 20SL	DEFLECTEUR D320/74X67 20SL DEFLECTOR D320/74X67 20SL	DIFFUSORE D320/74X67 20SL	1
	65312088	DRALLSTAUSCHEIBE D300/281/120 N9 GL-E STUWPLAAT D300/74X67 20SL	DEFLECTEUR D300/74X67 20SL DEFLECTOR D300/74X67 20SL	DIFFUSORE D300/74X67 20SL	1
2120	65312089	GASSTABILISIERUNGSDUESE DI=13 STABILISATIE GAS NOZZLE D=13	DIFFUSEUR GAZ DE STABILISATION D=13 DIFUSOR GAS DE ESTABILIZACIÓN D=13	INIETTORE DI STABILIZZAZIONE D=13	1

	6XXXXXXX	DE NL	FR ES	IT	X
2130	65312090	GASWINKELDUESE DI=20 GEBOGEN GAS NOZZLE D=20	DIFFUSEUR GAZ ANGULAIRE D=20 DIFUSOR GAS ANGULAR D=20	INIETTORE GAS ANGOLARE D=20	1
	65312091	GASWINKELDUESE DI=22 GEBOGEN GAS NOZZLE D=22	DIFFUSEUR GAZ ANGULAIRE D=22 DIFUSOR GAS ANGULAR D=22	INIETTORE GAS ANGOLARE D=22	1
2145	65312094	VERSCHLUSSDECKEL F.GASLANZE D30 KAP V. GASLANS D30	OBTURATEUR DE TUBE GAZ D30 OBTURADOR TUBERIA GAS D30	OTTURATORE DI TUBO GAS D30	1
2150	65311710	GASROHR D35X2,2X360 GRL. GASBUIS D35X2,2X360 GRL.	TUBE GAZ D35X2,2X360 GRL. TUBERIA GAS D35X2,2X360 GRL.	TUBO GAS D35X2,2X360 GRL.	1
	65312092	GASWINKELDUESE D35/24X56/245 GEBOGEN GAS NOZZLE D35/24X56/245	DIFFUSEUR GAZ ANGULAIRE D35/24X56/245 DIFUSOR GAS ANGULAR D35/24X56/245	INIETTORE GAS ANGOLARE D35/24X56/245	1
	65312093	GASWINKELDUESE D35/27X35/245 GEBOGEN GAS NOZZLE D35/27X35/245	DIFFUSEUR GAZ ANGULAIRE D35/27X35/245 DIFUSOR GAS ANGULAR D35/27X35/245	INIETTORE GAS ANGOLARE D35/27X35/245	1
	65312095	GASROHR D35X2,2X300 GASBUIS D35X2,2X300	TUBE GAZ D35X2,2X300 TUBERIA GAS D35X2,2X300	TUBO GAS D35X2,2X300	1
2160	65311702	GASROHR D35X2,2X360 GASBUIS D35X2,2X360	TUBE GAZ D35X2,2X360 TUBERIA GAS D35X2,2X360	TUBO GAS D35X2,2X360	1
	65311882	GASROHR D35X2,2X257 EINSTELLBAR GASBUIS D35X2,2X257 VERSTELBAAR	TUBE GAZ D35X2,2X257 REGLABLE TUBERIA GAS D35X2,2X257 AJUSTABLE	TUBO GAS D35X2,2X257 REGOLABILE	1
2170	65311683	GASDÜSE D30X2/D12X1,5 GAS VERSPREIDER D30x2/D12x1,5	DIFFUSEUR GAZ D30X2/D12X1,5 DIFUSOR DE GAS D30x2/D12x1,5	INIETTORE GAS D30x2/D12x1,5	1
	65312096	GASDUESE D30X2/10X1.5X103 GAS NOZZLE D30X2/10X1,5X103	DIFFUSEUR GAZ D30X2/10X1,5X103 DIFUSOR GAS D30X2/10X1,5X103	INIETTORE GAS D30X2/10X1,5X103	1
2171	65312013	GASDUESE D30X2/D12X1 L73 GAS NOZZLE D30X2/D12X1 L73	DIFFUSEUR GAZ D30X2/D12X1 L73 DIFUSOR GAS D30X2/D12X1 L73	INIETTORE GAS D30X2/D12X1 L73	1
2180	65311712	GASROHR D35X2.2X45GR. GASBUIS D35X2.2X45GR.	TUBE GAZ D35X2.2X45GR. TUBERIA GAS D35X2.2X45GR.	TUBO GAS D35X2.2X45GR.	1
	65312097	GASROHR D35X2,2X220/50 GASBUIS D35X2,2X220/50	TUBE GAZ D35X2,2X220/50 TUBERIA GAS D35X2,2X220/50	TUBO GAS D35X2,2X220/50	1
	65312098	GASROHR D35X2.2X100/35 GASBUIS D35X2,2X100/35	TUBE GAZ D35X2,2X100/35 TUBERIA GAS D35X2,2X100/35	TUBO GAS D35X2,2X100/35	1
2200	1728777751	ZÜNDKABEL D6,4/D6,4 L1500 AP ONTSTEKINGSKABEL D6,4/D6,4 L1500 AP	CABLE ALLUMAGE D6,4/D6,4 L1500 AP CABLE ENCENDIDO D6,4/D6,4 L1500 AP	CAVO ACCENSIONE D6,4/D6,4 L1500 AP	1
2201	65310724	ZÜNDKABEL D4/SAT 72750 ONTSTEKINGSKABEL D4/SAT 72750	CABLE ALLUMAGE D4/SAT 72750 CABLE ENCENDIDO D4/SAT 72750	CAVO ACCENSIONE D4/SAT 72750	1
2210	65311662	ELEKTRODENHALTER ELEKTRODESTEUN	SUPPORT ELECTRODE ALLUMAGE SOPORTE ELECTRODO	SUPPORTO ELETTRODO ACCENSIONE	1
2230	65311690	ZÜNDELEKTRODE D11X100 D6,4 D2,5X59 45° ONTSTEKINGSPEN D11X100 D6,4 D2,5X59 45°	ELECTRODE ALLUM.D11X100 D6,4 D2,5X59 45° ELECTRODO ENC. D11X100 D6,4 D2,5X59 45°	ELETTRODO ACCENS.D11X100 D6,4D2,5X59 45°	1
	65313846	ZÜNDELEKTRODE D11X100D6,4D2,5X150 27/90° ONTSTEKINGSP. D11X100D6,4D2,5X150 27/90°	ELECTRODE ALL.D11X100D6,4D2,5X150 27/90° ELECTRODO ENC.D11X100D6,4D2,5X150 27/90°	ELETTRODO ACC.D11X100D6,4D2,5X150 27/90°	1
2250	65311713	DICHTUNG/OVAL FLANSCH 210X160X2 D116 PAKKING/OVAL FLENS 210X160X2 D116	JOINT/BRIDE OVALE 210X160X2 D116 JUNTA/OVAL BRIDA 210X160X2 D116	GUARNIZIONE/OVAL FLANGIA 210X160X2 D116	1
2260	65312022	ZENTRIERSTÜTZE MZE N8/EKEVO8 CENTREERVOORZIENING N8/EKEVO8 N8/EKEVO8	PIED DE CENTRAGE N8/EKEVO8 PILAR DE CENTRAJE N8/EKEVO8	DISPOSITIVO DI CENTRAGGIO N8/EKEVO8	1
	65312023	ZENTRIERSTÜTZE MZE N9/EKEVO9 CENTREERVOORZIENING N8/EKEVO8 N9/EKEVO9	PIED DE CENTRAGE N9/EKEVO9 PILAR DE CENTRAJE N9/EKEVO9	DISPOSITIVO DI CENTRAGGIO N9/EKEVO9	1
2320	65312099	ZENTRIERUNG F. DUESENGESTAENGE DM35 CENTREERVOORZIENING V.SPROEIERLIJNE DM35	PIED DE CENTRAGE POUR LIGNE GICLEUR DM35 CENTRADO LÍNEA DE BOQUILLA DM35	PIEDINO DI CENTRAGGIO/LINEA UGELLO DM35	1
2330	65312100	HALTER ZENTRIERSTUECK STEUN VOOR CENTREERVOORZIENING	SUPPORT PIECE DE CENTRAGE SOPORTE PILAR DE CENTRAJE	SUPPORTO CENTRAGGIO	1
2350	1728703262	ZUENDELEKTROD.D11X220 D3X150 20° L150 D4 ONTSTEKINGSP. D11X220 D3X150 20° L150 D4	ELECT.ALLU. D11X220 D3X150 20° L150 D4 ELECTROD.ENC. D11X220 D3X150 20° L150 D4	ELETTRODO ACC.D11X220 D3X150 20° L150 D4	1
2360	65312141	KLEMMRING F. ZENTRIERUNG CENTREERRING	BAGUE DE CENTRAGE ANILLO DE CENTRADO	ANELLO DI CENTRAGGIO	1
2380	65310280	DÜSENSTANGE RDG 1250D35 L860 SPROEIERLIJNE RDG 1250D35 L860	LIGNE GICLEUR RDG 1250D35 L860 LÍNEA DE BOQUILLA RDG 1250D35 L860	LINEA UGELLO RDG 1250D35 L860	1
	65311817	DÜSENSTANGE RDG 1250D35 L760 SPROEIERLIJNE RDG 1250D35 L760	LIGNE GICLEUR RDG 1250D35 L760 LÍNEA DE BOQUILLA RDG 1250D35 L760	LINEA UGELLO RDG 1250D35 L760	1
	65311818	DÜSENSTANGE RDG 1250D35 L960 SPROEIERLIJNE RDG 1250D35 L960	LIGNE GICLEUR RDG 1250D35 L960 LÍNEA DE BOQUILLA RDG 1250D35 L960	LINEA UGELLO RDG 1250D35 L960	1
	65311884	D-STANGE RDG1250 L660 SPROEIERLIJNE RDG1250 L660	LIGNE GICLEUR RDG1250 L660 LÍNEA DE BOQUILLA RDG1250 L660	LINEA UGELLO RDG1250 L660	1
	65312102	DÜSENSTANGE D35 L560 SPROEIERLIJNE D35 L560	LIGNE GICLEUR D35 L560 LÍNEA DE BOQUILLA D35 L560	LINEA UGELLO D35 L560	1
2490	65311435	OELSCHLAUCH DN16 L500 OLIESLANG DN16 L500	FLEXIBLE DN16 L500 LATIGUILLO DN16 L500	TUBO FLESSIBILE DN16 L500	1
2810	65311406	PUMPENAGGREGAT SMG1630-I-4-SO-IE3 30BAR POMPAGGREGAAT SMG1630-I-4-SO-IE3 30BAR	GPE MOTOPOMPE SMG1630-I-4-SO-IE3 30BAR GRUPO DE BOMBA SMG1630-I-4-SO-IE3 30BAR	GRUPPO MOTOPOMP.SMG1630-I-4-SO-IE3 30BAR	1
	65312103	PUMPENAGGREGAT SMG1631-I-4-SO-IE3 30BAR POMPAGGREGAAT SMG1631-I-4-SO-IE3 30BAR	GPE MOTOPOMPE SMG1631-I-4-SO-IE3 30BAR GRUPO DE BOMBA SMG1631-I-4-SO-IE3 30BAR	GRUPPO MOTOPOMP.SMG1631-I-4-SO-IE3 30BAR	1
2815	65311407	MOTOR 3KW 230/400V D28 1400 TR/MN GMP MOTOR 3KW 230/400V D28 1400 TR/MN GMP	MOTEUR 3KW 230/400V D28 1400 TR/MN GMP MOTOR 3KW 230/400V D28 1400 TR/MN GMP	MOTORE 3KW 230/400V D28 1400 TR/MN GMP	1

	6XXXXXXX	DE NL	FR ES	IT	X
	65312104	MOTOR 4KW400/690V D28 1400TR/MN GMP IE3 MOTOR 4KW400/690V D28 1400TR/MN GMP IE3	MOTEUR 4KW400/690V D28 1400TR/MN GMP IE3 MOTOR 4KW400/690V D28 1400TR/MN GMP IE3	MOTORE 4KW400/690V D28 1400TR/MN GMP IE3	1
2820	1238795399	KUPPLUNG D24/28 PW DM18/MW KOPPELING D24/28 PW DM18/MW	ACCOUPLEMENT D24/28 PW DM18/MW ACOPLAMIENTO D24/28 PW DM18/MW	GIUNTO D24/28 PW DM18/MW	1
	1238795402	KUPPLUNG TYP 28/38 KPL. PW DM22/MW DM28 KOPPELING D28/38 PW DM22/MW	ACCOUPLEMENT D28/38 PW DM22/MW ACOPLAMIENTO D28/38 PW DM22/MW	GIUNTO D28/38 PW DM22/MW	1
2821	1238795424	ELASTISCHER ZAHNKRANZ F.KUPPL.24/28 KOPPELING D24/28 GMP	ACCOUPLEMENT D24/28 GMP ACOPLAMIENTO D24/28 GMP	GIUNTO D24/28 GMP	1
	1238795435	ELASTISCHER ZAHNKRANZ F.KUPPL.28/38 KOPPELING D28/38	ACCOUPLEMENT D28/38 ACOPLAMIENTO D28/38	GIUNTO D28/38	1
2825	65311410	OELPUMPE VBHRG I 410 SO 1700L/H POMP VBHRG I 410 SO 1700L/H	POMPE FIOUL VBHRG I 410 SO 1700L/H BOMBA VBHRG I 410 SO 1700L/H	POMPA VBHRG I 410 SO 1700L/H	1
	65312105	OELPUMPE VBHRG 2200L/H POMP VBHRG 2200L/H	POMPE FIOUL VBHRG 2200L/H BOMBA VBHRG 2200L/H	POMPA VBHRG 2200L/H	1
2826	13019380	DICHTUNGSSET / PUMPE D18 PAKKINGSET / POMP D18	ENSEMBLE DE JOINTS / POMPE D18 CONJUNTO DE JUNTAS / BOMBA D18	SET GUARNIZIONI / POMPA D18	1
	5788707026	DICHTUNGSSET D22 PAKKINGSET D22	ENSEMBLE DE JOINTS D22 CONJUNTO DE JUNTAS D22	SET GUARNIZIONI D22	1
2830	13022666	MAGNETVENTIL LUC 321F2523 P8 PG11 19W MAGNEETKLEP LUC 321F2523 P8 PG11 19W	ELECTROVANNE LUC 321F2523 P8 PG11 19W ELECTROVALVULA LUC 321F2523 P8 PG11 19W	ELETTROVALVOLA LUC 321F2523 P8 PG11 19W	1
	13022667	MAGNETVENTIL LUC 121F2523 P8 PG11 19W MAGNEETKLEP LUC 121F2523 P8 PG11 19W	ELECTROVANNE LUC 121F2523 P8 PG11 19W ELECTROVALVULA LUC 121F2523 P8 PG11 19W	ELETTROVALVOLA LUC 121F2523 P8 PG11 19W	1
2840	65311572	MANOMETER M.GLYZERINF.D 63 0-40 BAR G1/4 MANOMETER GLYCEROL D 63 0-40 BAR G1/4	MANOMETRE GLYCERINE D 63 0-40 BAR G1/4 MANOMETRO GLICERINA D 63 0-40 BAR G1/4	MANOMETRO GLICERINE D 63 0-40 BAR G1/4	1
2850	65311831	DISTANZBOLZEN M6/M8X42 SW15 AFSTANDHOUDER M6 /M8 X 42 SW15	ENTRETOISE M6/M8X42 SW15 DISTANCIADOR M6/M8X42 SW15	DISTANZIATORE M6/M8X42 SW15	1
2860	65311412	BEFESTIGUNGSPLATTE HYDR.-BL.-STELL. STE BEVESTIGINGSPLAAT VAN DE SERVOMOTOR STE	PLATINE SERVOMOTEUR STE PLACA DEL SERVOMOTOR STE	PIASTRA SERVOMOTORE STE	1
2870	65311650	STELLANTRIEB STE 4,5 Q3.51/6+KABEL L3000 SERVOMOTOR STE 4,5 Q3.51/6+KABEL L3000	SERVOMOTEUR STE 4,5 Q3.51/6+CABLE L3000 SERVOMOTOR STE 4,5 Q3.51/6+CABLE L3000	SERVOMOTORE STE 4,5 Q3.51/6+CAVO L3000	1
	65311833	STELLANTRIEB STM 40 Q15.51/8 2NR REGELMOTOR STM 40 Q15.51/8 2NR	SERVOMOTEUR STM 40 Q15.51/8 2NR SERVOMOTOR STM 40 Q15.51/8 2NR	SERVOMOTORE STM 40 Q15.51/8 2NR	1
2880	65312206	DRUCKWAECHTER DSB158 F931, 3-25BAR, IP65 OLIEDRUKSCHAKELAAR DSB 158 F931 3-25BAR	MANOSTAT FIOUL DSB 158 F931 3-25BAR PRESOSTATO GASOLEO DSB 158 F931 3-25BAR	PRESSOSTATO GASOLIO DSB 158 F931 3-25BAR	1
2890	65311616	DICHTUNG GDM 3-21 PAKKING GDM 3-21	JOINT GDM 3-21 JUNTA GDM 3-21	GUARNIZIONE GDM 3-21	1
2900	65311615	GERAETESTECKDOSE GDMW 30-11 DF STEKKER GDMW 30-11 DF	PRISE GDMW 30-11 DF TOMA GDMW 30-11 DF	PRESA GDMW 30-11 DF	1
2910	13019342	OELSCHLAUCH M30X1,5 DN20 L=1500 OLIESLANG M30X1,5 DN20 L=1500	FLEXIBLE M30X1,5 DN20 L=1500 LATIGUILLO M30X1,5 DN20 L=1500	FLESSIBILE M30X1,5 DN20 L=1500	1
	1488436955	OELSCHLAUCH M38X1,5 DN25 L=1500 OLIESLANG M38X1,5 DN25 L=1500	FLEXIBLE M38X1,5 DN25 L=1500 LATIGUILLO M38X1,5 DN25 L=1500	TUBO FLESSIBILE M38X1,5 DN25 L=1500	1
2920	65311414	T-WINKELANSCHL.R1Z (SCHMUTZFAENG.) OVE T-AANSLUITING R1Z (FILTER) OVE	RACCORD EN T R1Z (FILTRE) OVE RACOR EN T R1Z (FILTRO) OVE	RACCORDO A T R1Z (FILTRO) OVE	1
	65311578	OELFILTER RP3/4 PN16 OLIEFILTER RP3/4 PN16	FILTRE FIOUL RP3/4 PN16 FILTRO GASOLEO RP3/4 PN16	FILTRO GASOLIO RP3/4 PN16	1
3005	65311613	DICHTUNG/GASSTRECKE D162/115X2 DN100 PAKKING/GASSTRAAT D162/115X2 DN100	JOINT/RAMPE GAZ D162/115X2 DN100 JUNTA/RAMPA DE GAS D162/115X2 DN100	GUARNIZIONE/RAMPA GAS D162/115X2 DN100	1
3010	65311678	GASANSCHLUSSSTÜCK DN100 / R2Z STANDARD GASAANSLUITBUIS DN100-R2Z 2G1/4 PN16	COLLECTEUR GAZ DN100 / R2" STD. COLECTOR DN100-R2Z 2G1/4 PN16	COLLETTORE GAS DN100 / R2" STD.	1
3020	65311606	GERADE-EINSCHRAUBVERSCHR.P-GEV 8LR-WD-VI RECHTE AANSLUITING P-GEV 8LR-WD-VI	RACCORD DROIT P-GEV 8LR-WD-VI RACOR RECTO P-GEV 8LR-WD-VI	RACCORDO DESTRO P-GEV 8LR-WD-VI	1
3030	65311604	EINSTELLB.W-VERSCHRAUBUNG P-EWV 8-L GEBOGEN AANSLUITING P-EWV 8-L	RACCORD COUDE P-EWV 8-L RACOR ACODADO P-EWV 8-L	RACCORDO A GOMITO P-EWV 8-L	1
3040	65311579	MESSNIPPEL R1/4Z M.DICHTUNG MEETNIPPEL 1/4" MET PAKKING	PRISE DE PRESSION R1/4Z+JOINT TOMA DE PRESIÓN R1/4Z+JUNTA	PRESA DI PRESSIONE R1/4Z+GUARNIZIONE	1
3060	65311581	GAS-MV VGD 20.5011 R2Z X 265 MM GASKLEP VGD20 5011 RP2"	VANNE GAZ VGD20 5011 RP2" VALVULA GAS VGD20 5011 RP2"	VALVOLA GAS VGD20 5011 RP2"	1
3070	65107100	STELLANTRIEB SKP25.003E2 O. ENDSCHALTER REGELMOT. GAS SKP25.003E2 Z.EINDSCHALTE	SERVOMOT. GAZ SKP25.003E2 S.FIN COURSE SERVOMOTOR SKP25.003 E2 SIN FIN CARRERA	SERVOMOT. GAS SKP25.003E2 S.FINE CORSA	1
3080	65311585	KABEL ANSCHLUSS AGA 62 STCK DIN L270 KABEL CONNECT AGA 62 STCK DIN L270	CABLE CONNECT. AGA 62 PRISE DIN L270 CABLE DE CONEXION AGA 62 TOMA DIN L270	CAVO COLLEGA AGA 62 PRESA DIN L270	1
3090	1478836180	STELLANTRIEB SKP 15.000E2 O. ENDSCHALTER REGELMOTOR GAS SKP15.000E2 Z.EINDSCHALTE	SERVOMOT.GAZ SKP15.000E2 SANS FIN COURSE SERVOMO. GAS SKP15.000E2 SIN FIN CARRERA	SERVOMOT.GAS SKP15.000E2 SENZ.FINE CORSA	1
3110	65311377	FLANSCH AGF10.50 RP2 FLENS AGF10.50 RP2	BRIDE AGF10.50 RP2 BRIDA AGF10.50 RP2	FLANGIA AGF10.50 RP2	1
3120	65310852	DRUCKWAECHTER GW 500 A5 (30-500MBAR) GASDRUKSCHAKELAAR GW 500 A5 30-500MB	MANOSTAT GAZ GW 500 A5 30-500MB PRESOSTATO GAS GW 500 A5 30-500MB	PRESSOSTATO GAS GW 500 A5 30-500MB	1
	65323022	GASDRUCKWAECHTER GW 150 A6 5-150 MB DIN GASDRUKSCHAKELAAR GW 150 A6 5-150MB DIN	MANOSTAT GAZ GW 150 A6 5-150MB DIN PRESOSTATO GAS GW 150 A6 5-150MB DIN	PRESSOSTATO GAS GW 150 A6 5-150MB DIN	1
3130	65311586	LEITUNGSDOSE VENTILANTRIEB AGA64 STEKKER VROUWELIJK AGA64	PRISE FEMELLE AGA64 TOMA HEMBRA AGA64	PRESA FEMMINA AGA64	1

	6XXXXXXX	DE NL	FR ES	IT	X
3140	65311615	GERAETESTECKDOSE GDMW 30-11 DF STEKKER GDMW 30-11 DF	PRISE GDMW 30-11 DF TOMA GDMW 30-11 DF	PRESA GDMW 30-11 DF	1
3300	65311459	GASFILTER GF80M-1616-A-1 RP2 1BAR GASFILTER GF80M-1616-A-1 RP2 1BAR	FILTRE GAZ GF80M-1616-A-1 RP2 1BAR FILTRO GAS GF80M-1616-A-1 RP2 1BAR	FILTRO GAS GF80M-1616-A-1 RP2 1BAR	1
3301	65311361	FILTEREINSATZ RP 1 1/2+O-RING FILTERELEMENT RP 1 1/2+O-RING	ELEMENT FILTRANT RP 1 1/2+O-RING ELEMENTO FILTRANTE RP 1 1/2+O-RING	ELEMENTO FILTRANTE RP 1 1/2+O-RING	1
3505	65311613	DICHTUNG/GASSTRECKE D162/115X2 DN100 PAKKING/GASSTRAAT D162/115X2 DN100	JOINT/RAMPE GAZ D162/115X2 DN100 JUNTA/RAMPA DE GAS D162/115X2 DN100	GUARNIZIONE/RAMPA GAS D162/115X2 DN100	1
3510	65311973	GASANSCHLUSSSTUECK DN100 RP2Z GASAANSLUITBUIS DN100 / R2	TUBE CONNEXION GAZ DN100 / RP2" COLECTOR DN100 / R2	TUBO CONNEZZIONE GAS DN100 / Rp2"	1
3580	65311840	GASVENTIL MBC-1200-SE S82 RP2Z 5-80MBAR GASKLEP MBC1200 SE S82 RP2'' 5-80 MBAR	VANNE GAZ MBC1200 SE S82 RP2'' 5-80 MBAR VALVULA GAS MBC1200 SE S82 RP2'' 5-80MBA	VALVOLA GAS MBC1200 SE S82 RP2'' 5-80MBA	1
3620	65313022	FLANSCH ZU DMV-D R 2Z O.MESSNIPPEL MONTAGE FLENS MBC-7/1200 DMV512/520 2"	BRIDE MBC700/1200 RP2 BRIDA MBC700/1200 RP2	FLANGIA MBC700/1200 RP2	1
3640	65310852	DRUCKWAECHTER GW 500 A5 (30-500MBAR) GASDRUKSCHAKELAAR GW 500 A5 30-500MB	MANOSTAT GAZ GW 500 A5 30-500MB PRESOSTATO GAS GW 500 A5 30-500MB	PRESSOSTATO GAS GW 500 A5 30-500MB	1
	65311598	DRUCKWAECHTER GW 150 A5 M. STECKERANSCHL GASDRUKSCHAKELAAR GW 150 A5 30-150MB	MANOSTAT GAZ GW 150 A5 30-150MB PRESOSTATO GAS GW 150 A5 30-150MB	PRESSOSTATO GAS GW 150 A5 30-150MB	1
3650	65311615	GERAETESTECKDOSE GDMW 30-11 DF STEKKER GDMW 30-11 DF	PRISE GDMW 30-11 DF TOMA GDMW 30-11 DF	PRESA GDMW 30-11 DF	1
3700	13022417	FILTEREINSATZ MBC 1200 FILTERELEMENT MBC 1200	ELEMENT FILTRANT MBC 1200 ELEMENTO FILTRANTE MBC 1200	ELEMENTO FILTRANTE MBC 1200	1
3800	65311459	GASFILTER GF80M-1616-A-1 RP2 1BAR GASFILTER GF80M-1616-A-1 RP2 1BAR	FILTRE GAZ GF80M-1616-A-1 RP2 1BAR FILTRO GAS GF80M-1616-A-1 RP2 1BAR	FILTRO GAS GF80M-1616-A-1 RP2 1BAR	1
3801	65311361	FILTEREINSATZ RP 1 1/2+O-RING FILTERELEMENT RP 1 1/2+O-RING	ELEMENT FILTRANT RP 1 1/2+O-RING ELEMENTO FILTRANTE RP 1 1/2+O-RING	ELEMENTO FILTRANTE RP 1 1/2+O-RING	1
4005	65311613	DICHTUNG/GASSTRECKE D162/115X2 DN100 PAKKING/GASSTRAAT D162/115X2 DN100	JOINT/RAMPE GAZ D162/115X2 DN100 JUNTA/RAMPA DE GAS D162/115X2 DN100	GUARNIZIONE/RAMPA GAS D162/115X2 DN100	1
4010	65311674	GASANSCHLUSSSTÜCK DN100/DN65 GASAANSLUITBUIS DN100/DN65	COLLECTEUR GAZ DN100/DN65 COLECTOR DN100/DN65	COLLETTORE GAS DN100/DN65	1
	65311675	GASANSCHLUSSSTÜCK DN100 / DN80 GASAANSLUITBUIS DN100-DN80 PN16	COLLECTEUR GAZ DN100/DN80 COLECTOR DN100-DN80 PN16	COLLETTORE GAS DN100/DN80	1
	65311676	GASANSCHLUSSSTÜCK DN100/DN100 GASAANSLUITBUIS DN100/DN100	COLLECTEUR GAZ DN100/DN100 COLECTOR DN100/DN100	COLLETTORE GAS DN100/DN100	1
	65311677	GASANSCHLUSSSTÜCK DN100/DN125 GASAANSLUITBUIS DN100/DN125	COLLECTEUR GAZ DN100/DN125 COLECTOR DN100/DN125	COLLETTORE GAS DN100/DN125	1
4020	65311601	GERADE-EINSCHRAUBSTUT.P-EGES 12L/R 1/4WD RECHTE AANSLUITING P-EGES 12L/R 1/4WD	RACCORD DROIT P-EGES 12L/R 1/4WD RACOR RECTO P-EGES 12L/R 1/4WD	RACCORDO DESTRO P-EGES 12L/R 1/4WD	1
4030	65311608	EINSTELLB.WINKELVERSCHR.P-EWV12L-SV AANSLUITING (ELLEBOOG) P-EWV12L-SV	RACCORD COUDE P-EWV12L-SV RACOR (CODO) P-EWV12L-SV	RACCORDO CURVA P-EWV12L-SV	1
4040	65311605	KREUZVERSCHR.P-KV12L AANSLUITING P-KV12L	RACCORD P-KV12L RACOR P-KV12L	RACCORDO P-KV12L	1
4060	65311607	STOPFEN D15/10X21 VSD 12L/S O.M.MB STOP D15/10X21 VSD 12L/S O.M.MB	BOUCHON D15/10X21 VSD 12L/S O.M.MB TAPÓN D15/10X21 VSD 12L/S O.M.MB	TAPPO D15/10X21 VSD 12L/S O.M.MB	1
4070	65311601	GERADE-EINSCHRAUBSTUT.P-EGES 12L/R 1/4WD RECHTE AANSLUITING P-EGES 12L/R 1/4WD	RACCORD DROIT P-EGES 12L/R 1/4WD RACOR RECTO P-EGES 12L/R 1/4WD	RACCORDO DESTRO P-EGES 12L/R 1/4WD	1
4080	65311453	GAS-MV VGD 40.125 DN125 PN16 X 400 MM GASKLEP VGD40 125 DN125	VANNE GAZ VGD40 125 DN125 VALVULA GAS VGD40 125 DN125	VALVOLA GAS VGD40 125 DN125	1
	65311583	GAS-MV VGD 40.080 DN80 X 310MM GASKLEP VGD40 080 DN80	VANNE GAZ VGD40 080 DN80 VALVULA GAS VGD40 080 DN80	VALVOLA GAS VGD40 080 DN80	1
	65311590	GAS-MV VGD 40.100 DN100 X 350 MM GASKLEP VGD40 100, DN100X350MM	VANNE GAZ VGD40 100 DN100 VALVULA GAS VGD40 100 DN100	VALVOLA GAS VGD40 100 DN100	1
	65323661	GAS-MV VGD 40.065 GASKLEP VGD40 065 DN65	VANNE GAZ VGD40 065 DN65 VÁLVULA GAS VGD40 065 DN65	VALVOLA GAS VGD40 065 DN65	1
4090	65107100	STELLANTRIEB SKP25.003E2 O. ENDSCHALTER REGELMOT. GAS SKP25.003E2 Z.EINDSCHALTE	SERVOMOT. GAZ SKP25.003E2 S.FIN COURSE SERVOMOTOR SKP25.003 E2 SIN FIN CARRERA	SERVOMOT. GAS SKP25.003E2 S.FINE CORSA	1
4100	65311585	KABEL ANSCHLUSS AGA 62 STCK DIN L270 KABEL CONNECT AGA 62 STCK DIN L270	CABLE CONNECT. AGA 62 PRISE DIN L270 CABLE DE CONEXION AGA 62 TOMA DIN L270	CAVO COLLEGA AGA 62 PRESA DIN L270	1
4110	1478836180	STELLANTRIEB SKP 15.000E2 O. ENDSCHALTER REGELMOTOR GAS SKP15.000E2 Z.EINDSCHALTE	SERVOMOT.GAZ SKP15.000E2 SANS FIN COURSE SERVOMO. GAS SKP15.000E2 SIN FIN CARRERA	SERVOMOT.GAS SKP15.000E2 SENZ.FINE CORSA	1
4120	65311611	DICHTUNG/GASSTRECKE D127/77X2 DN65 PAKKING/GASSTRAAT D127/77X2 DN65	JOINT/RAMPE GAZ D127/77X2 DN65 JUNTA/RAMPA DE GAS D127/77X2 DN65	GUARNIZIONE/RAMPA GAS D127/77X2 DN65	1
	65311612	DICHTUNG/GASSTRECKE D142/90X2 DN80 PAKKING/GASSTRAAT D142/90X2 DN80 PN16	JOINT/RAMPE GAZ D142/90X2 DN80 JUNTA/RAMPA DE GAS D142/90X2 DN80	GUARNIZIONE/RAMPA GAS D142/90X2 DN80	1
	65311613	DICHTUNG/GASSTRECKE D162/115X2 DN100 PAKKING/GASSTRAAT D162/115X2 DN100	JOINT/RAMPE GAZ D162/115X2 DN100 JUNTA/RAMPA DE GAS D162/115X2 DN100	GUARNIZIONE/RAMPA GAS D162/115X2 DN100	1
	65311614	DICHTUNG/GASSTRECKE D192/141X2 DN125 PAKKING/GASSTRAAT D192/141X2 DN125	JOINT/RAMPE GAZ D192/141X2 DN125 JUNTA/RAMPA DE GAS D192/141X2 DN125	GUARNIZIONE/RAMPA GAS D192/141X2 DN125	1
4130	65311586	LEITUNGSDOSE VENTILANTRIEB AGA64 STEKKER VROUWELIJK AGA64	PRISE FEMELLE AGA64 TOMA HEMBRA AGA64	PRESA FEMMINA AGA64	1
4140	65311615	GERAETESTECKDOSE GDMW 30-11 DF STEKKER GDMW 30-11 DF	PRISE GDMW 30-11 DF TOMA GDMW 30-11 DF	PRESA GDMW 30-11 DF	1

	6XXXXXXX	DE NL	FR ES	IT	X
4150	65310852	DRUCKWAECHTER GW 500 A5 (30-500MBAR) GASDRUKSCHAKELAAR GW 500 A5 30-500MB	MANOSTAT GAZ GW 500 A5 30-500MB PRESOSTATO GAS GW 500 A5 30-500MB	PRESSOSTATO GAS GW 500 A5 30-500MB	1
	65323022	GASDRUCKWAECHTER GW 150 A6 5-150 MB DIN GASDRUKSCHAKELAAR GW 150 A6 5-150MB DIN	MANOSTAT GAZ GW 150 A6 5-150MB DIN PRESOSTATO GAS GW 150 A6 5-150MB DIN	PRESSOSTATO GAS GW 150 A6 5-150MB DIN	1
4300	65311460	GASFILTER GF65MF-2020-A-1 DN65 1BAR GASFILTER GF65MF-2020-A-1 DN65 1BAR	FILTRE GAZ GF65MF-2020-A-1 DN65 1BAR FILTRO GAS GF65MF-2020-A-1 DN65 1BAR	FILTRO GAS GF65MF-2020-A-1 DN65 1BAR	1
	65311461	GASFILTER GF80MF-2424-A-1 DN80 1BAR GASFILTER GF80MF-2424-A-1 DN80 1BAR	FILTRE GAZ GF80MF-2424-A-1 DN80 1BAR FILTRO GAS GF80MF-2424-A-1 DN80 1BAR	FILTRO GAS GF80MF-2424-A-1 DN80 1BAR	1
	65311462	GASFILTER GF100MF-3232-A-1 DN100 1BAR GASFILTER GF100MF-3232-A-1 DN100 1BAR	FILTRE GAZ GF100MF-3232-A-1 DN100 1BAR FILTRO GAS GF100MF-3232-A-1 DN100 1BAR	FILTRO GAS GF100MF-3232-A-1 DN100 1BAR	1
	65311463	GASFILTER GF125MF-4040-A-1 DN125 1BAR GASFILTER GF125MF-4040-A-1 DN125 1BAR	FILTRE GAZ GF125MF-4040-A-1 DN125 1BAR FILTRO GAS GF125MF-4040-A-1 DN125 1BAR	FILTRO GAS GF125MF-4040-A-1 DN125 1BAR	1
4301	65311723	FILTEREINSATZ GF 65 MF FILTERELEMENT GF 65 MF	ELEMENT FILTRANT GF 65 MF ELEMENTO FILTRANTE GF 65 MF	ELEMENTO FILTRANTE GF 65 MF	1
	65311888	FILTEREINSATZ GF 80 MF FILTERELEMENT GF 80 MF	ELEMENT FILTRANT GF 80 MF ELEMENTO FILTRANTE GF 80 MF	ELEMENTO FILTRANTE GF 80 MF	1
	65311889	FILTEREINSATZ GF 100 MF FILTERELEMENT GF 100 MF	ELEMENT FILTRANT GF 100 MF ELEMENTO FILTRANTE GF 100 MF	ELEMENTO FILTRANTE GF 100 MF	1
	65311890	FILTEREINSATZ GF 125 MF FILTERELEMENT GF 125 MF	ELEMENT FILTRANT GF 125 MF ELEMENTO FILTRANTE GF 125 MF	ELEMENTO FILTRANTE GF 125 MF	1
4505	65311613	DICHTUNG/GASSTRECKE D162/115X2 DN100 PAKKING/GASSTRAAT D162/115X2 DN100	JOINT/RAMPE GAZ D162/115X2 DN100 JUNTA/RAMPA DE GAS D162/115X2 DN100	GUARNIZIONE/RAMPA GAS D162/115X2 DN100	1
4510	65311674	GASANSCHLUSSSTÜCK DN100/DN65 GASAANSLUITBUIS DN100/DN65	COLLECTEUR GAZ DN100/DN65 COLECTOR DN100/DN65	COLLETTORE GAS DN100/DN65	1
	65311675	GASANSCHLUSSSTÜCK DN100 / DN80 GASAANSLUITBUIS DN100-DN80 PN16	COLLECTEUR GAZ DN100/DN80 COLECTOR DN100-DN80 PN16	COLLETTORE GAS DN100/DN80	1
	65311676	GASANSCHLUSSSTÜCK DN100/DN100 GASAANSLUITBUIS DN100/DN100	COLLECTEUR GAZ DN100/DN100 COLECTOR DN100/DN100	COLLETTORE GAS DN100/DN100	1
4520	65311601	GERADE-EINSCHRAUBSTUT.P-EGES 12L/R 1/4WD RECHTE AANSLUITING P-EGES 12L/R 1/4WD	RACCORD DROIT P-EGES 12L/R 1/4WD RACOR RECTO P-EGES 12L/R 1/4WD	RACCORDO DESTRO P-EGES 12L/R 1/4WD	1
4530	65311344	T-VERSCHRAUBUNG P-TV 12 L T-STUK P-TV 12 L	RACCORD EN T P-TV 12 L RACOR EN T P-TV 12 L	RACCORDO A T P-TV 12 L	1
4560	65311607	STOPFEN D15/10X21 VSD 12L/S O.M.MB STOP D15/10X21 VSD 12L/S O.M.MB	BOUCHON D15/10X21 VSD 12L/S O.M.MB TAPÓN D15/10X21 VSD 12L/S O.M.MB	TAPPO D15/10X21 VSD 12L/S O.M.MB	1
4580	65311844	GASVENTIL MBC-1900-SE DN65 40-80MBAR GASKLEP MBC1900 SE DN65 40-80MBAR	VANNE GAZ MBC1900 SE DN65 40-80MBAR VALVULA GAS MBC1900SE DN65 40-80MBAR	VALVOLA GAS MBC1900 SE DN65 40-80MBAR	1
	65311845	GASVENTIL MBC-3100-SE DN80 40-80MBAR GASKLEP MBC3100 SE DN80 40-80 MBAR	VANNE GAZ MBC3100 SE DN80 40-80 MBAR VALVULA GAS MBC3100 SE DN80 40-80 MBAR	VALVOLA GAS MBC3100 SE DN80 40-80 MBAR	1
	65311846	GASVENTIL MBC-5000-SE DN100 40-80MBAR GASKLEP MBC5000 SE DN100 40-80 MBAR	VANNE GAZ MBC5000 SE DN100 40-80 MBAR VALVULA GAS MBC5000 SE DN100 40-80 MBAR	VALVOLA GAS MBC5000 SE DN100 40-80 MBAR	1
4620	65311611	DICHTUNG/GASSTRECKE D127/77X2 DN65 PAKKING/GASSTRAAT D127/77X2 DN65	JOINT/RAMPE GAZ D127/77X2 DN65 JUNTA/RAMPA DE GAS D127/77X2 DN65	GUARNIZIONE/RAMPA GAS D127/77X2 DN65	1
	65311612	DICHTUNG/GASSTRECKE D142/90X2 DN80 PAKKING/GASSTRAAT D142/90X2 DN80 PN16	JOINT/RAMPE GAZ D142/90X2 DN80 JUNTA/RAMPA DE GAS D142/90X2 DN80	GUARNIZIONE/RAMPA GAS D142/90X2 DN80	1
	65311613	DICHTUNG/GASSTRECKE D162/115X2 DN100 PAKKING/GASSTRAAT D162/115X2 DN100	JOINT/RAMPE GAZ D162/115X2 DN100 JUNTA/RAMPA DE GAS D162/115X2 DN100	GUARNIZIONE/RAMPA GAS D162/115X2 DN100	1
4640	65310852	DRUCKWAECHTER GW 500 A5 (30-500MBAR) GASDRUKSCHAKELAAR GW 500 A5 30-500MB	MANOSTAT GAZ GW 500 A5 30-500MB PRESOSTATO GAS GW 500 A5 30-500MB	PRESSOSTATO GAS GW 500 A5 30-500MB	1
	65323022	GASDRUCKWAECHTER GW 150 A6 5-150 MB DIN GASDRUKSCHAKELAAR GW 150 A6 5-150MB DIN	MANOSTAT GAZ GW 150 A6 5-150MB DIN PRESOSTATO GAS GW 150 A6 5-150MB DIN	PRESSOSTATO GAS GW 150 A6 5-150MB DIN	1
4650	65311615	GERAETESTECKDOSE GDMW 30-11 DF STEKKER GDMW 30-11 DF	PRISE GDMW 30-11 DF TOMA GDMW 30-11 DF	PRESA GDMW 30-11 DF	1
4800	65311460	GASFILTER GF65MF-2020-A-1 DN65 1BAR GASFILTER GF65MF-2020-A-1 DN65 1BAR	FILTRE GAZ GF65MF-2020-A-1 DN65 1BAR FILTRO GAS GF65MF-2020-A-1 DN65 1BAR	FILTRO GAS GF65MF-2020-A-1 DN65 1BAR	1
	65311461	GASFILTER GF80MF-2424-A-1 DN80 1BAR GASFILTER GF80MF-2424-A-1 DN80 1BAR	FILTRE GAZ GF80MF-2424-A-1 DN80 1BAR FILTRO GAS GF80MF-2424-A-1 DN80 1BAR	FILTRO GAS GF80MF-2424-A-1 DN80 1BAR	1
	65311462	GASFILTER GF100MF-3232-A-1 DN100 1BAR GASFILTER GF100MF-3232-A-1 DN100 1BAR	FILTRE GAZ GF100MF-3232-A-1 DN100 1BAR FILTRO GAS GF100MF-3232-A-1 DN100 1BAR	FILTRO GAS GF100MF-3232-A-1 DN100 1BAR	1
4801	65311723	FILTEREINSATZ GF 65 MF FILTERELEMENT GF 65 MF	ELEMENT FILTRANT GF 65 MF ELEMENTO FILTRANTE GF 65 MF	ELEMENTO FILTRANTE GF 65 MF	1
	65311888	FILTEREINSATZ GF 80 MF FILTERELEMENT GF 80 MF	ELEMENT FILTRANT GF 80 MF ELEMENTO FILTRANTE GF 80 MF	ELEMENTO FILTRANTE GF 80 MF	1
	65311889	FILTEREINSATZ GF 100 MF FILTERELEMENT GF 100 MF	ELEMENT FILTRANT GF 100 MF ELEMENTO FILTRANTE GF 100 MF	ELEMENTO FILTRANTE GF 100 MF	1
5001	1458645325	DUESE BER 350KG 55° CBM SPROEIER BER 350KG 55° CBM	GICLEUR BER 350KG 55° CBM BOQUILLA BER 350KG 55° CBM	UGELLO BER 350KG 55° CBM	1
	1458645347	DUESE BER 400KG 55° CBM SPROEIER BER 400KG 55° CBM	GICLEUR BER 400KG 55° CBM BOQUILLA BER 400KG 55° CBM	UGELLO BER 400KG 55° CBM	1
	1458698846	DUESE DZ1000 750KG 80° M14 1-5 SPROEIER DZ1000 750KG 80° M14 1-5	GICLEUR DZ1000 750KG 80° M14 1-5 BOQUILLA DZ1000 750KG 80° M14 1-5	UGELLO DZ1000 750KG 80° M14 1-5	1
	1458698891	DUESE DZ1000 1000KG 80° M14 1-5 SPROEIER DZ1000 1000KG 80° M14 1-5	GICLEUR DZ1000 1000KG 80° M14 1-5 BOQUILLA DZ1000 1000KG 80° M14 1-5	UGELLO DZ1000 1000KG 80° M14 1-5	1

	6XXXXXXX	DE NL	FR ES	IT	X
	65311201	DUESE DZ1000 950KG 80° M14 1-5 SPROEIER DZ1000 950KG 80° M14 1-5	GICLEUR DZ1000 950KG 80° M14 1-5 BOQUILLA DZ1000 950KG 80° M14 1-5	UGELLO DZ1000 950KG 80° M14 1-5	1
	65312421	DUESE DZ1000 800KG 80° M14 1-5 SPROEIER DZ1000 800KG 80° M14 1-5	GICLEUR DZ1000 800KG 80° M14 1-5 BOQUILLA DZ1000 800KG 80° M14 1-5	UGELLO DZ1000 800KG 80° M14 1-5	1
	65313182	DUESE BER 275KG 55° CBM SPROEIER BER 275KG 55° CBM	GICLEUR BER 275KG 55° CBM BOQUILLA BER 275KG 55° CBM	UGELLO BER 275KG 55° CBM	1
	65313183	DUESE BER 300KG 55° CBM SPROEIER BER 300KG 55° CBM	GICLEUR BER 300KG 55° CBM BOQUILLA BER 300KG 55° CBM	UGELLO BER 300KG 55° CBM	1
	65313184	DUESE BER 450KG 55° CBM SPROEIER BER 450KG 55° CBM	GICLEUR BER 450KG 55° CBM BOQUILLA BER 450KG 55° CBM	UGELLO BER 450KG 55° CBM	1
	65313185	DUESE BER 500KG 55° CBM SPROEIER BER 500KG 55° CBM	GICLEUR BER 500KG 55° CBM BOQUILLA BER 500KG 55° CBM	UGELLO BER 500KG 55° CBM	1
	65313186	DUESE BER 600KG 55° CBM SPROEIER BER 600KG 55° CBM	GICLEUR BER 600KG 55° CBM BOQUILLA BER 600KG 55° CBM	UGELLO BER 600KG 55° CBM	1
	65313190	DUESE DZ1000 900KG 80° M14 1-5 SPROEIER DZ1000 900KG 80° M14 1-5	GICLEUR DZ1000 900KG 80° M14 1-5 BOQUILLA DZ1000 900KG 80° M14 1-5	UGELLO DZ1000 900KG 80° M14 1-5	1
	65313851	DUESE BER 550KG 55° CBM SPROEIER BER 550KG 55° CBM	GICLEUR BER 550KG 55° CBM BOQUILLA BER 550KG 55° CBM	UGELLO BER 550KG 55° CBM	1
	65313852	DUESE DZ1000 550KG 80° M14 1-5 SPROEIER DZ1000 550KG 80° M14 1-5	GICLEUR DZ1000 550KG 80° M14 1-5 BOQUILLA DZ1000 550KG 80° M14 1-5	UGELLO DZ1000 550KG 80° M14 1-5	1
	65313853	DUESE DZ1000 700KG 80° M14 1-5 SPROEIER DZ1000 700KG 80° M14 1-5	GICLEUR DZ1000 700KG 80° M14 1-5 BOQUILLA DZ1000 700KG 80° M14 1-5	UGELLO DZ1000 700KG 80° M14 1-5	1
	65313854	DUESE DZ1000 650KG 80° M14 1-5 SPROEIER DZ1000 650KG 80° M14 1-5	GICLEUR DZ1000 650KG 80° M14 1-5 BOQUILLA DZ1000 650KG 80° M14 1-5	UGELLO DZ1000 650KG 80° M14 1-5	1
	65313855	DUESE DZ1000 850KG 80° M14 1-5 SPROEIER DZ1000 850KG 80° M14 1-5	GICLEUR DZ1000 850KG 80° M14 1-5 BOQUILLA DZ1000 850KG 80° M14 1-5	UGELLO DZ1000 850KG 80° M14 1-5	1
5002	65312447	FEUERUNGSAUT. BT340 BASISEINSTELL. BRANDERAUT. BT340 BASIS AFSTELLING	COFFRET BT340 REGLAGE DE BASE PROGRAMADOR BT340 CONFIGUR. BÁSICA	APPARECCH. BT340 REGOL. BASE	1
	65312450	FEUERUNGSAUT. BT340 SPEZIAL EINSTELL. BRANDERAUT. BT340 SPECIAL. AFSTELLING	COFFRET BT340 REGLAGE SPECIFIQUE PROGRAMADOR BT340 CONFIG. ESPECÍFICA	APPARECCH. BT340 REGOL. SPEZIAL.	1
	65312455	FEUERUNGSAUTOM. BT340 GL-EF3+FQ.UM BRANDERAUT. BT340 GL-EF3+FQ.OMV.	COFFRET BT340 GL-EF3+REG.FRQ. PROGRAMAD.BT340 GL-EF3+CONV.FREQ.	APPARECCHIAT.BT340 GL-EF3+REG.FQ	1
5010	65311362	PRUEFBRENNER M.DRUCKKNOPFHAHN PB2 PROEFBRANDER MET DRUKKNOP PB2	BRULEUR ESSAI AVEC B. POUSSOIR PB2 QUEMADOR DE PRUEBA CON PULSADOR PB2	BRUCIATORE DI PROVA CON PULSANTE PB2	1
5020	65311918	VSM100 (LSB-M 667R0200-1) VSM100-MODULE (LSB-M 667R0200-1)	MODULE VSM100 (LSB-M 667R0200-1) MÓDULO VSM100 (LSB-M 667R0200-1)	MODULO VSM100 (LSB-M 667R0200-1)	1
5042	65311940	RELAIS FIN 38.61.8.240.5060 KLL 1W FZ RELAIS FIN 38.61.8.240.5060 KLL 1W FZ	RELAIS FIN 38.61.8.240.5060 KLL 1W FZ RELE FIN 38.61.8.240.5060 KLL 1W FZ	RELE FIN 38.61.8.240.5060 KLL 1W FZ	1
5070	65311937	DURCHGANGSKLEMME WAGO (GRAU) 2010-1301 DOORVERBINDINGSKLEM WAGO GRIJS 2010-1301	BORNE DE JONCTION WAGO (GRIS) 2010-1301 BORNE DE PASO WAGO (GRIS) 2010-1301	MORSETTO PASSANTE WAGO (GRIGIO)2010-1301	1
	65311938	DURCHGANGSKLEMME WAGO (GRAU) 2016-1301 DOORVERBINDINGSKLEM WAGO GRIJS 2016-1301	BORNE DE JONCTION WAGO (GRIS) 2016-1301 BORNE DE PASO WAGO (GRIS) 2016-1301	MORSETTO PASSANTE WAGO (GRIGIO)2016-1301	1
5071	65311939	DURCHGANGSKLEMME WAGO (PE) 2016-1307 DOORVERBINDINGSKLEM WAGO (PE) 2016-1307	BORNE DE JONCTION WAGO (TERRE) 2016-1307 BORNE DE PASO WAGO (PE) 2016-1307	MORSETTO PASSANTE WAGO (TERRA) 2016-1307	1
5080	65311793	MOTORSCHUETZ SCH D 3-4KW LC1D09P7 CONTACT MOTOR SCH D 3-4kW LC1D09P7	CONTACTEUR MOTEUR SCH D 3-4kW LC1D09P7 CONTACTOR DE MOTOR SCH D 3-4kW LC1D09P7	CONTATTORE MOTORE SCH D 3-4kW LC1D09P7	1
5085	65311794	MOTORSCHUTZSCHALTER 3-4KW GV2ME14 VERMOGENSCHAKEL. MOTOR 3-4KW GV2ME14	DISJONCTEUR MOTEUR 3-4KW GV2ME14 INTERRUPTOR MOTOR 3-4KW GV2ME14	INTERRUTTORE MOTORE 3-4KW GV2ME14	1
5086	65311795	HILFSSCHALTER GVAE11 HULPSCHAKELAAR GVAE11	CONTACT AUXILIAIRE GVAE11 INTERRUPTOR AUXILIAR GVAE11	INTERRUTTORE AUSILIARIO GVAE11	1
5087	65311941	FREQ.UMRICHTER ACH550 15KW FREQ.OMVORMER ACH550 15KW	VARIATEUR FREQ. ACH550 15KW CONVERTIDORES FREQ. ACH550 15KW	VARIATORE FREQ. ACH550 15KW	1
	65311942	FREQ.UMRICHTER ACH550 22KW FREQ.OMVORMER ACH550 22KW	VARIATEUR FREQ. ACH550 22KW CONVERTIDORES FREQ. ACH550 22KW	VARIATORE FREQ. ACH550 22KW	1
	65312014	FREQUENZUMRICHTER ACH550 - 11kW FREQUENTIEOMVORMER ACH550 - 11kW	VARIATEUR DE FREQUENCE ACH550 - 11kW CONVERTIDOR DE FRECUENCIAS ACH550 - 11kW	CONVERTITORE DI FREQUENZA ACH550 - 11kW	1
	65312021	FREQ.UMRICHTER ACH550 18,5KW FREQ.OMVORMER ACH550 18,5KW	VARIATEUR FREQ. ACH550 18,5KW CONVERTIDORES FREQ. ACH550 18,5KW	VARIATORE FREQ. ACH550 18,5KW	1
5090	65311943	LUEFTER FREQUENZUMRICHTER HOOFDVENTILATOR FREQUENTIEOMVORMER	VENTILATEUR CONVERTISSEUR DE FREQUENCE VENTILADOR DEL CONVERTIDOR DE FRECUENCIA	VENTILATORE CONVERTITORE DI FREQUENZA	1
5091	65311944	FILTER GITTER 177X177 EFA 200R5/ELDON FILTER VENTIL. 177X177 EFA 200R5/ELDON	FILTRE AERAT. 177X177 EFA 200R5/ELDON FILTRO VENTIL. 177X177 EFA 200R5 /ELDON	FILTRO AERAZ. 177X177 EFA 200R5 /ELDON	1
5100	65312285	REGELWELLE 8.0 LINKSVERS. GR.2 REGELING AS 8.0 (CCW) GR.2	ARBRE DE REGULATION 8.0(ROT.GAUCHE) GR.2 ARBOL DE REGULAC. 8.0(ROT.IZQUIERDA)GR.2	ALBERO DI REGOLAZ. 8.0(ROT.SINISTRA)GR.2	1
	65312292	REGELWELLE 7.0 LINKSVERS. GR.2 REGELING AS 7.0 (CCW) GR.2	ARBRE DE REGULATION 7.0(ROT.GAUCHE) GR.2 ARBOL DE REGULAC. 7.0(ROT.IZQUIERDA)GR.2	ALBERO DI REGOLAZ. 7.0(ROT.SINISTRA)GR.2	1
	65312293	REGELWELLE 9.0 LINKSVERS. GR.2 REGELING AS 9.0 (CCW) GR.2	ARBRE DE REGULATION 9.0(ROT.GAUCHE) GR.2 ARBOL DE REGULAC. 9.0(ROT.IZQUIERDA)GR.2	ALBERO DI REGOLAZ. 9.0(ROT.SINISTRA)GR.2	1
	65312302	REGELWELLE 5.0 LINKSVERS. REGELING AS 5.0 (CCW)	ARBRE DE REGULATION 5.0 (ROT. GAUCHE) ARBOL DE REGULACION 5.0 (ROT. IZQUIERDA)	ALBERO DI REGOLAZIONE 5.0 (ROT.SINISTRA)	1
	65312303	REGELWELLE 6.0 LINKSVERS. REGELING AS 6.0 (CCW)	ARBRE DE REGULATION 6.0 (ROT. GAUCHE) ARBOL DE REGULACION 6.0 (ROT. IZQUIERDA)	ALBERO DI REGOLAZIONE 6.0 (ROT.SINISTRA)	1

	6XXXXXXX	DE NL	FR ES	IT	X
	65312304	REGELWELLE 7.0 LINKSVERS. REGELING AS 7.0 (CCW)	ARBRE DE REGULATION 7.0 (ROT. GAUCHE) ARBOL DE REGULACION 7.0 (ROT. IZQUIERDA)	ALBERO DI REGOLAZIONE 7.0 (ROT.SINISTRA)	1
	65312305	REGELWELLE 8.0 LINKSVERS. REGELING AS 8.0 (CCW)	ARBRE DE REGULATION 8.0 (ROT. GAUCHE) ARBOL DE REGULACION 8.0 (ROT. IZQUIERDA)	ALBERO DI REGOLAZIONE 8.0 (ROT.SINISTRA)	1
5110	65311439	KLEMMLEISTE WAGO STRG.N6-9 GL-E/F3 TB KLEMMENSTROOK WAGO STRG.N6-9 GL-E/F3 TB	BORNIER WAGO STRG.N6-9 GL-E/F3 TB REGLETA BORNES WAGO STRG.N6-9 GL-E/F3 TB	MORSETTIERA WAGO STRG.N6-9 GL-E/F3 TB	1
5111	65311440	ICOTEK EMV STECKFUSS 3-6MM KLEMMLEISTE CONNECTORHOUDER 3-6 MM	SUPPORT CONNECTEUR 3-6MM SOPORTE DE CONECTOR 3-6 MM	SUPPORTO CONNETTORE 3-6MM	1
5112	65311441	DURCHGANGSKLEMME WAGO (ORANGE) 2001-1202 DOORVERBINDINGSKLEM WAGO ORANGE2001-1202	BORNE DE JONCTION WAGO (ORANGE)2001-1202 BORNE DE PASO WAGO (NARANJA) 2001-1202	MORSETTO PASSANTE WAGO(ARANCIO)2001-1202	1
5113	65311442	ICOTEK EMV STECKFUSS 6-8MM KLEMMLEISTE CONNECTORHOUDER 6-8 MM	SUPPORT CONNECTEUR 6-8MM SOPORTE DE CONECTOR 6-8 MM	SUPPORTO CONNETTORE 6-8MM	1
5114	65311443	DURCHGANGSKLEMME WAGO (GRAU) 2001-1201 DOORVERBINDINGSKLEM WAGO GRIJS 2001-1201	BORNE DE JONCTION WAGO (GRIS) 2001-1201 BORNE DE PASO WAGO (GRIS) 2001-1201	MORSETTO PASSANTE WAGO (GRIGIO)2001-1201	1
5115	65311444	DURCHGANGSKLEMME WAGO (PE) 2001-1207 DOORVERBINDINGSKLEM WAGO (PE) 2001-1207	BORNE DE JONCTION WAGO (TERRE) 2001-1207 BORNE DE PASO WAGO (PE) 2001-1207	MORSETTO PASSANTE WAGO (TERRA) 2001-1207	1
5116	65311445	DURCHGANGSKLEMME WAGO (PE) 2001-1407 DOORVERBINDINGSKLEM WAGO (PE) 2001-1407	BORNE DE JONCTION WAGO (TERRE) 2001-1407 BORNE DE PASO WAGO (PE) 2001-1407	MORSETTO PASSANTE WAGO (TERRA) 2001-1407	1
5117	65311446	WAG BETAETIGUNGSWERKZEUG 2009-309 BEDIENINGSGEREEDSCHAP WAG 2009-309	OUTIL DE MANOEUVRE WAG 2009-309 HERRAMIENTA D.ACCIONAM. WAG 2009-309	DISPOSITIVO DI MANOVRA WAG 2009-309	1
5118	65311447	DURCHGANGSKLEMME WAGO (NEUTRAL)2001-1404 DOORVERBINDINGSKLEM WAGO (N) 2001-1404	BORNE DE JONCTION WAGO (NEUTRE)2001-1404 BORNE DE PASO WAGO (NEUTRO) 2001-1404	MORSETTO PASSANTE WAGO (NEUTRO)2001-1404	1
5119	65311448	DURCHGANGSKLEMME WAGO (NEUTRAL)2001-1204 DOORVERBINDINGSKLEM WAGO (N) 2001-1204	BORNE DE JONCTION WAGO (NEUTRE)2001-1204 BORNE DE PASO WAGO (NEUTRO) 2001-1204	MORSETTO PASSANTE WAGO (NEUTRO)2001-1204	1
5120	65311449	DURCHGANGSKLEMME WAGO (GRAU) 2001-1401 DOORVERBINDINGSKLEM WAGO GRIJS 2001-1401	BORNE DE JONCTION WAGO (GRIS) 2001-1401 BORNE DE PASO WAGO (GRIS) 2001-1401	MORSETTO PASSANTE WAGO (GRIGIO)2001-1401	1
5121	65311450	PRÜFLAST ETAMATIC 663R1199 TESTLADING ETAMATIC 663R1199	CHARGE D'ESSAI ETAMATIC 663R1199 CARGA DE PRUEBA ETAMATIC 663R1199	CARICA DI TEST ETAMATIC 663R1199	1
5122	65311451	KABELVERSCHRAUBUNG M16 PAKKINGBUS M16	PRESSE-ETOUPE M16 PRENSAESTOPAS M16	PREMISTOPPA M16	1
	65311758	KABELVERSCHRAUBUNG M20 PAKKINGBUS M20	PRESSE-ETOUPE M20 PRENSAESTOPAS M20	PREMISTOPPA M20	1
	65311759	KABELVERSCHRAUBUNG M25 PAKKINGBUS M25	PRESSE-ETOUPE M25 PRENSAESTOPAS M25	PREMISTOPPA M25	1
5123	65311786	DEMONTAGEWERKZEUG KABELVER. CLICK M16 CLIC TOOL M16	OUTIL CLIC M16 CLIC TOOL M16	CLIC TOOL M16	1
	65311787	DEMONTAGEWERKZEUG KABELVER. CLICK M20 CLIC TOOL M20	OUTIL CLIC M20 CLIC TOOL M20	CLIC TOOL M20	1
	65311788	DEMONTAGEWERKZEUG KABELVER. CLICK M25 CLIC TOOL M25	OUTIL CLIC M25 CLIC TOOL M25	CLIC TOOL M25	1
5150	1758811789	NETZTEIL ML30.100 - 24V DC VOEDING ML30.100-24V DC	BLOC D'ALIMENTATION ML30.100-24V DC FUENTE DE ALIMENTACION ML30.100-24V DC	ALIMENTATORE ML30.100-24V DC	1
5300	65114033	REGLER RWF 55.50A9 REGELAAR RWF 55.50A9	REGULATEUR RWF 55.50A9 REGULADOR RWF 55.50A9	REGOLATORE RWF 55.50A9	1

	6XXXXXXX	RU TR	PT	PL	X
1010	65311967	ФЛАНЕЦ 37X62X15 D12 KFL001 FLANŞI 37X62X15 D12 KFL001	FLANGE 37X62X15 D12 KFL001	KOŁNIERZ 37X62X15 D12 KFL001	1
1015	65311657	ИНДИКАТОР ВОЗДУШНОЙ ЗАСЛОНКИ HAVA KANALI GÖSTERGESI	INDICADOR DE FLAP DE AR	WSKAŹNIK KLAPY POWIETRZA	1
1020	65311689	ДЕРЖАТЕЛЬ СЕРВОДВИГАТЕЛЬ/ВОЗДУШНАЯ ЗАСЛ. DESTEĞI SERVOMOTOR / HAVA KLAPESI	SUPORTE SERVOMOTOR / FLAP DE AR	WSPORNIK SERWOMOTOR/PRZEPUSTNICA POWIET.	1
1030	65311650	СЕРВОДВИГАТЕ STE4,5 Q3.51/6+КАБЕЛЬ L3000 SERVOMOTOR STE 4,5 Q3.51/6+KABLOSU L3000	SERVOMOTOR STE 4,5 Q3.51/6+CABO L3000	SERWOMOTOR STE 4,5 Q3.51/6+PRZEWÓD L3000	1
	65311833	СЕРВОДВИГАТЕЛЬ STM 40 Q15.51/8 2NR SERVOMOTOR STM 40 Q15.51/8 2NR	SERVOMOTOR STM 40 Q15.51/8 2NR	SERWOMOTOR STM 40 Q15.51/8 2NR	1
1035	1658418384	ДАТЧИК NAMUR D14 SENSÖR NAMUR D14	SENSOR NAMUR D14	CZUJNIK NAMUR D14	1
1040	65311665	ВОЗДУХОЗАБОРНИК D332x127,5 HAVA GIRIŞ D332x127,5	ENTRADA DE AR D332x127,5	WLOT POWIETRZA D332x127,5	1
	65311672	ВОЗДУХОЗАБОРНИК D318x134 HAVA GIRIŞ D318x134	ENTRADA DE AR D318x134	WLOT POWIETRZA D318x134	1
	65311673	ВОЗДУХОЗАБОРНИК D288x127 HAVA GIRIŞ D288x127	ENTRADA DE AR D288x127	WLOT POWIETRZA D288x127	1
	65311715	ВОЗДУХОЗАБОРНИК D344x126 HAVA GIRIŞ D344x126	ENTRADA DE AR D344x126	WLOT POWIETRZA D344x126	1
1050	1180603227	БЕСЦВЕТ. ГЛАЗОК ДЛЯ КОНТРОЛЯ ПЛАМЕНИ RENKSİZ GÖZETLEME CAMI D55X21	VIGIA INCOLOR D55X21	WZIERNIK BEZBARWNA D55X21	1
1060	1188052260	ГЛАЗОК ДЛЯ КОНТРОЛЯ ПЛАМЕНИ КОРОБ KAPAK/GÖZETLEME CAMI D55X61	TAMPA VIGIA D55X61	POKRYWA/WZIERNIK D55X61	1
1070	1180559591	ГАЙКА. ДЛЯ КОНТРОЛЯ ПЛАМЕНИ M48X1,5 SW60 SOMUN/GÖZETLEME CAMI M48X1,5 SW60	PARAFUSO VIGIA M48X1,5 SW60	NAKRĘTKA/WZIERNIK M48X1,5 SW60	1
1080	65311670	РАБОЧЕЕ КОЛЕСО D556/320X86 D42 TÜRBIN D556/320X86 D42	TURBINA D556/320X86 D42	WIMIK D556/320X86 D42	1
	65311716	РАБОЧЕЕ КОЛЕСО D533/290X83 D42 TÜRBIN D533/290X83 D42	TURBINA D533/290X83 D42	WIMIK D533/290X83 D42	1
	65311717	РАБОЧЕЕ КОЛЕСО D590/334X92 D42 TÜRBIN D590/334X92 D42	TURBINA D590/334X92 D42	WIMIK D590/334X92 D42	1
	65311718	РАБОЧЕЕ КОЛЕСО D600/346X93 D48 TÜRBIN D600/346X93 D48	TURBINA D600/346X93 D48	WIMIK D600/346X93 D48	1
1090	65311471	ТРАНСФОРМАТОР РОЗЖИГА EBI 1X11 230 ATEŞLEME TRAFO. EBI 1X11 230V	TRANSFO IGNIÇÃO EBI 1X11 230V	TRANSFO ZAPŁONOWY EBI 1X11 230V	1
1091	1738733651	ТРАНСФО РОЗЖИГА ZA20 140 E21 REP.ZM20/14 ATEŞLEME TRAFO.ZA 20 140 E21 REP.ZM20/14	TRANSFO IGNIÇÃO ZA20 140 E21 REP.ZM20/14	TRANSFO ZAPŁONO.ZA20 140 E21 REP.ZM20/14	1
1095	13019357	ФОТОРЕЗИСТОР D-LX100 EK-S (IR) HÜCRE D-LX100 EK-S (IR)	CELULA D-LX100 EK-S (IR)	FOTOKOMÓRKA D-LX100 EK-S (IR)	1
	65312274	ФОТОРЕЗИСТОР FFS08-UV1 659D31 - 5M W/O HÜCRE FFS08-UV1 659D31 - 5M W/O	FOTOCÉLULA FFS08-UV1 659D31 - 5M W/O	FOTOKOMÓRKA FFS08-UV1 659D31 - 5M W/O	1
1100	65311472	ЗЕРКАЛО/ГЛАЗОК ДЛЯ КОНТРОЛЯ ПЛАМЕНИ AYNA/GÖZETLEME CAMI	ESPELHO/VIGIA	LUSTRO/WZIERNIK	1
1110	65311595	РЕЛЕ ДАВ. ВОЗДУХА LGW 50 A2P 2,5-50MB HAVA BASINÇ ŞALT. LGW 50 A2P 2,5-50MB	PRESSOSTATO AR LGW 50 A2P 2,5-50MB	CZUJNIK CIŚ. POW. LGW 50 A2P 2,5-50MB	1
1120	65310688	ГАЗОВЫЙ КЛАПАН СОБР. D100 Z05 Z GAZ KLAPESI BIRL. D100 Z05 Z	VÁLVULA DE GAS MONT. D100 Z05 Z	ZAWÓR GAZU ZŁO. D100 Z05 Z	1
1130	65311659	ПРОКЛАДОЧНОЕ КОЛЬЦО SW13X55 PASPAYI SW13X55	ESPAÇADOR SW13X55	ROZPÓRKA SW13X55	1
1140	65311658	ДЕРЖАТЕЛЬ СЕРВОДВИГАТЕЛЬ/ГАЗОВЫЙ КЛАПАН DESTEĞI SERVOMOTOR / GAZ KLAPESI	SUPORTE SERVOMOTOR / VÁLVULA DE GAS	WSPORNIK SERWOMOTOR / ZAWÓR GAZU	1
1150	65311660	СЦЕПЛЕНИЕ ГАЗОВЫЙ КЛАП./СЕРВОДВИГАТЕ.STE KAPLİN GAZ KLAPESI/SERVOMOTOR STE N8-N9	ACOPLAMENTO VÁLVULA GAS/SERVOM.STE N8-N9	ŁĄCZNIK ZAWÓR GAZU/SERWOMOTOR STE N8-N9	1
1160	65311650	СЕРВОДВИГАТЕ STE4,5 Q3.51/6+КАБЕЛЬ L3000 SERVOMOTOR STE 4,5 Q3.51/6+KABLOSU L3000	SERVOMOTOR STE 4,5 Q3.51/6+CABO L3000	SERWOMOTOR STE 4,5 Q3.51/6+PRZEWÓD L3000	1
	65311833	СЕРВОДВИГАТЕЛЬ STM 40 Q15.51/8 2NR SERVOMOTOR STM 40 Q15.51/8 2NR	SERVOMOTOR STM 40 Q15.51/8 2NR	SERWOMOTOR STM 40 Q15.51/8 2NR	1
1170	65326333	ЭЛЕКТРОДВИГАТЕ.11KW 400/690V D42 IE3 ЧЕ. MOTORU 11KW 400/690V D42 IE3 ELV SIYAH	MOTOR 11KW 400/690V D42 IE3 ELV PRETO	SILNIK 11KW 400/690V D42 IE3 ELV CZARNY	1
	65326334	ЭЛЕКТРОДВИГАТЕ.15KW 400/690V D42 IE3 ЧЕ. MOTORU 15KW 400/690V D42 IE3 ELV SIYAH	MOTOR 15KW 400/690V D42 IE3 ELV PRETO	SILNIK 15KW 400/690V D42 IE3 ELV CZARNY	1
	65326335	ЭЛЕКТРОДВИГА.18,5KW 400/690V D42 IE3 ЧЕ. MOTORU 18,5KW 400/690V D42 IE3 ELV SIYAH	MOTOR 18,5KW 400/690V D42 IE3 ELV PRETO	SILNIK 18,5KW 400/690V D42 IE3 ELV CZAR.	1
	65326336	ЭЛЕКТРОДВИГАТЕ.22KW 400/690V D48 IE3 ЧЕ. MOTORU 22KW 400/690V D48 IE3 ELV SIYAH	MOTOR 22KW 400/690V D48 IE3 ELV PRETO	SILNIK 22KW 400/690V D48 IE3 ELV CZARNY	1
1180	65311502	МАГНИТ FIX КОЖУХ ГОРЕЛКИ MAGNET FIX KAPAGI BRULOR	IMAN FIX COBERTURA QUEIMADOR	MAGNET FIX OSŁONA PALNIKA	1
1190	65311714	СВЯЗЬ СТЕРЖЕНЬ CS10 L200 BAĞLANTI ÇUBUĞU CS10 L200	HASTE DO CONEXAO CS10 L200	TRZPIEŃ POŁĄCZENIE CS10 L200	1
1200	65311686	ОСЬ / ВОЗДУШНАЯ ЗАСЛОНКА D12X673 D4H7 AKSI / HAVA KLAPESI D12X673 D4H7	HASTE / FLAP DE AR D12X673 D4H7	OŚ/PRZEPUSTNICA POWIETRZA D12X673 D4H7	1

	6XXXXXXX	RU TR	PT	PL	X
1210	65311701	ЗУБЧАТОЕ КОЛЕ.Z=100 M=1 BO=12MM/BORG.6MM DIŞLI Z=100 M=1 BO=12MM /BORG. 6 MM	RODA DENTAD. Z=100 M=1 BO=12MM /BORG.6MM	KOŁO ZĘBATE Z=100 M=1 BO=12MM /BORG.6 MM	1
1220	65311685	ОСЬ / ВОЗДУШНАЯ ЗАСЛОНКА D12X670 D4H7 AKSI / HAVA KLAPESI D12X670 D4H7	HASTE / FLAP DE AR D12X670 D4H7	OŚ/PRZEPUSTNICA POWIETRZA D12X670 D4H7	1
1225	65311687	ОСЬ/ВОЗДУШНАЯ ЗАСЛ. D12X705 M8+УКАЗАТЕЛЬ AKSI / HAVA KLAPESI D12X705 M8+IŞARETÇI	HASTE / FLAP DE AR D12X705 M8 + PONTEIRO	OŚ/PRZEPUSTNICA POW.D12X705 M8 +WSKAŹNIK	1
1226	65311688	ОСЬ/ВОЗДУШНАЯ ЗАСЛОНКА D12X705+УКАЗАТЕЛЬ AKSI / HAVA KLAPESI D12X705 + IŞARETÇI	HASTE / FLAP DE AR D12X705 + PONTEIRO	OŚ/PRZEPUSTNICA POW. D12X705 + WSKAŹNIK	1
1230	65311684	ВОЗДУШНАЯ ЗАСЛОНКА HAVA KLAPESI	FLAP DE AR	PRZEPUSTNICA POWIETRZA	1
1605	65311789	АДАПТЕР BT300/DFM300 RAST5 ADAPTÖR BT300/DFM300 RAST5	ADAPTADOR BT300/DFM300 RAST5	ADAPTER BT300/DFM300 RAST5	1
1610	65311790	МОДУЛЬ LCM100 (LSB-M 667R0500-1) MODÜLÜ LCM100 (LSB-M 667R0500-1)	MÓDULO LCM100 (LSB-M 667R0500-1)	MODUL LCM100 (LSB-M 667R0500-1)	1
1615	65311791	МОДУЛЬ DFM300 (LSB-M 667R0600-1) MODÜLÜ DFM300 (LSB-M 667R0600-1)	MÓDULO DFM300 (LSB-M 667R0600-1)	MODUL DFM300 (LSB-M 667R0600-1)	1
1620	65311449	ПРОХОДНАЯ КЛЕММА WAGO (СЕРАЯ) 2001-1401 DEVRE TERMINALI WAGO (GRI) 2001-1401	BORNE DE PASAGEM WAGO (CINZA) 2001-1401	ZACISK PRZELOTOWY WAGO (SZARY) 2001-1401	1
1625	65311447	ПРОХОДНАЯ КЛЕММА WAGO (N) 2001-1404 DEVRE TERMINALI WAGO (N) 2001-1404	BORNE DE PASAGEM WAGO (NEUTRO) 2001-1404	ZACISK PRZELOTOWY WAGO (N) 2001-1404	1
1626	65311445	ПРОХОДНАЯ КЛЕММА WAGO (PE) 2001-1407 DEVRE TERMINALI WAGO (PE) 2001-1407	BORNE DE PASAGEM WAGO (PE) 2001-1407	ZACISK PRZELOTOWY WAGO (PE) 2001-1407	1
1640	65311446	ИНСТРУМЕНТЫ WAG 2009-309 İŞLETIM ARAC WAG 2009-309	FERRAMENTA WAG 2009-309	NARZĘD. D.PRZEŁĄCZANIA WAG 2009-309	1
1645	65311793	ВЫКЛЮЧ. ЭЛЕКТРОДВ. SCH D 3-4kW LC1D09P7 KONTAKTOER MOTOR SCH D 3-4kW LC1D09P7	CONTACTOR MOTOR SCH D 3-4kW LC1D09P7	STYCZNIK SILNIK SCH D 3-4kW LC1D09P7	1
1650	65311794	РАЗЪЕДИНИТ. ЭЛЕКТРОДВИГА. 3-4KW GV2ME14 DEVRE KESİCİ MOTOR 3-4KW GV2ME14	DISJUNTOR MOTOR 3-4KW GV2ME14	WYŁĄCZNIKI SILNIK 3-4KW GV2ME14	1
1651	65311795	ВСПОМОГАТЕЛЬНЫЙ ПЕРЕКЛЮЧАТЕЛЬ GVAE11 YARDIMCI ANAHTARI GVAE11	INTERRUPTOR AUXILIAR GVAE11	PRZEŁĄCZNIK POMOCNICZY GVAE11	1
1655	65311796	ПУСКАТЕЛЬ ДВИГАТЕЛЯ Y/D 18KW LC3D18AP7 MARŞ MOTORU Y/D 18KW LC3D18AP7	ARRANCADOR MOTOR Y/D 18KW LC3D18AP7	ROZRUSZ. SILNIKA Y/D 18KW LC3D18AP7	1
	65311797	ПУСКАТЕЛЬ ДВИГАТЕЛЯ Y/D 22KW LC3D32AP7 MARŞ MOTORU Y/D 22KW LC3D32AP7	ARRANCADOR MOTOR Y/D 22KW LC3D32AP7	ROZRUSZ. SILNIKA Y/D 22KW LC3D32AP7	1
	65312015	ПУСКАТЕЛЬ ДВИГАТЕЛЯ Y/D 11KW LC3D12AP7 MARŞ MOTORU Y/D 11KW LC3D12AP7	ARRANCADOR MOTOR Y/D 11KW LC3D12AP7	ROZRUSZ. SILNIKA Y/D 11KW LC3D12AP7	1
1660	65311798	РАЗЪЕДИНИТ. ЭЛЕКТРОДВИ. 15KW GV2ME32 DEVRE KESİCİ MOTOR 15KW GV2ME32	DISJUNTOR MOTOR 15KW GV2ME32	WYŁĄCZNIKI SILNIK 15KW GV2ME32	1
	65311917	РАЗЪЕДИНИТ. ЭЛЕКТРОДВИ. 22KW GV3P50 DEVRE KESİCİ MOTOR 22KW GV3P50	DISJUNTOR MOTOR 22KW GV3P50	WYŁĄCZNIKI SILNIK 22KW GV3P50	1
	65312018	РАЗЪЕДИНИТ. ЭЛЕКТРОДВИ. 11KW GV2ME22 DEVRE KESİCİ MOTOR 11KW GV2ME22	DISJUNTOR MOTOR 11KW GV2ME22	WYŁĄCZNIKI SILNIK 11KW GV2ME22	1
	65312019	РАЗЪЕДИНИТ. ЭЛЕКТРОДВИ. 18,5KW GV3P40 DEVRE KESİCİ MOTOR 18,5KW GV3P40	DISJUNTOR MOTOR 18,5KW GV3P40	WYŁĄCZNIKI SILNIK 18,5KW GV3P40	1
1661	65311795	ВСПОМОГАТЕЛЬНЫЙ ПЕРЕКЛЮЧАТЕЛЬ GVAE11 YARDIMCI ANAHTARI GVAE11	INTERRUPTOR AUXILIAR GVAE11	PRZEŁĄCZNIK POMOCNICZY GVAE11	1
1665	65311919	ШАССИ, 3 ДЕТАЛИ M22-A EKIPMAN RAFI, 3 GÖZLÜ M22-A	SUPORTE DE APARELHO, 3 NIVEIS M22-A	WSPORNIK URZĄDZENIA, 3 POZIOMY M22-A	1
1666	65311443	ПРОХОДНАЯ КЛЕММА WAGO (СЕРАЯ) 2001-1201 DEVRE TERMINALI WAGO (GRI) 2001-1201	BORNE DE PASAGEM WAGO (CINZA) 2001-1201	ZACISK PRZELOTOWY WAGO (SZARY) 2001-1201	1
1667	65311444	ПРОХОДНАЯ КЛЕММА WAGO (PE) 2001-1207 DEVRE TERMINALI WAGO (PE) 2001-1207	BORNE DE PASAGEM WAGO (PE) 2001-1207	ZACISK PRZELOTOWY WAGO (PE) 2001-1207	1
1670	65311920	СВЕТОДИОДНЫЙ ЭЛЕМЕНТ, БЕЛЫЙ M22-CLED230 LED ELEMAN, BEYAZ M22-CLED230	ELEMENTO LED, BRANCO M22-CLED230	ELEMENT LED, BIAŁY M22-CLED230	1
	65311921	РАЗМЫКАЮЩИЙ КОНТАКТ M22 -CK01 KILIT AÇMA KONTAK M22 -CK01	CONTACTO NF M22 -CK01	STYKI ROZWIERNE M22 -CK01	1
	65311922	РАЗМЫКАЮЩИЙ ДВОЙНОЙ КОНТАКТ M22-CK02 ÇIFT KILIT AÇMA KONTAK M22-CK02	CONTACTO DUPLO NF M22-CK02	PODWÓJNE STYKI ROZWIERNE M22-CK02	1
	65311923	ЗАМЫКАЮЩИЙ КОНТАКТ M22-CK10 KILIT KAPATMA KONTAK M22-CK10	CONTACTO NA M22-CK10	STYKI ZWIERNE M22-CK10	1
	65311924	ЗАМЫКАЮЩИЙ ДВОЙНОЙ КОНТАКТ M22-CK20 ÇIFT KILIT KAPATMA KONTAK M22-CK20	CONTACTO DUPLO NA M22-CK20	PODWÓJNE STYKI ZWIERNE M22-CK20	1
1675	65312454	БЛОК УПРАВЛЕНИЯ BT340 GL-E KUTU BT340 GL-E	PROGRAMADOR BT340 GL-E	MODUŁ BT340 GL-E	1
1676	65311926	ЗАГЛУШКА X30-X34 667R0001 KÖR KAPAK X30-X34 667R0001	TAMPA CEGA X30-X34 667R0001	ZAŚLEPKA X30-X34 667R0001	1
1680	65311927	ПРОХОДНАЯ КЛЕММА WAGO ОРАНЖЕВАЯ2001-1402 DEVRE TERMINALI WAGO (TURUNCU) 2001-1402	BORNE DE PASAGEM WAGO LARANJA 2001-1402	ZACISK PRZELOTOWY WAGO POMARA 2001-1402	1
1685	65311445	ПРОХОДНАЯ КЛЕММА WAGO (PE) 2001-1407 DEVRE TERMINALI WAGO (PE) 2001-1407	BORNE DE PASAGEM WAGO (PE) 2001-1407	ZACISK PRZELOTOWY WAGO (PE) 2001-1407	1
1690	65311449	ПРОХОДНАЯ КЛЕММА WAGO (СЕРАЯ) 2001-1401 DEVRE TERMINALI WAGO (GRI) 2001-1401	BORNE DE PASAGEM WAGO (CINZA) 2001-1401	ZACISK PRZELOTOWY WAGO (SZARY) 2001-1401	1

	6XXXXXXX	RU TR	PT	PL	X
1695	65311447	ПРОХОДНАЯ КЛЕММА WAGO (N) 2001-1404 DEVRE TERMINALI WAGO (N) 2001-1404	BORNE DE PASAGEM WAGO (NEUTRO) 2001-1404	ZACISK PRZELOTOWY WAGO (N) 2001-1404	1
1700	65311451	САЛБНИК M16 KABLO RAKORU M16	PRENSAESTOPAS M16	DŁAWNICA M16	1
1701	65311758	САЛБНИК M20 KABLO RAKORU M20	PRENSAESTOPAS M20	DŁAWNICA M20	1
	65311759	САЛБНИК M25 KABLO RAKORU M25	PRENSAESTOPAS M25	DŁAWNICA M25	1
1705	65311443	ПРОХОДНАЯ КЛЕММА WAGO (СЕРАЯ) 2001-1201 DEVRE TERMINALI WAGO (GRI) 2001-1201	BORNE DE PASAGEM WAGO (CINZA) 2001-1201	ZACISK PRZELOTOWY WAGO (SZARY) 2001-1201	1
1710	65311441	ПРОХОДНАЯ КЛЕММА WAGO ОРАНЖЕ. 2001-1202 DEVRE TERMINALI WAGO (TURUNCU)2001-1202	BORNE DE PASAGEM WAGO LARANJA 2001-1202	ZACISK PRZELOTOWY WAGO POMARA 2001-1202	1
1715	65311931	АВТОМАТИЧЕСКИЙ ВЫКЛЮЧАТЕЛЬ EMNIYET OTOMATI?I	DISJUNTOR AUTOMÁTICO 1P SCHNEIDER 23614	BEZPIECZNIK AUTOMATYCZNY 1P SCHNEIDER 23	1
1716	65311932	КЛЕММНАЯ КОЛОДКА WAGO STRG. N6-9 GL-E BT TERMINAL BLOĞU WAGO STRG. N6-9 GL-E BT	BLOCO TERMINAL WAGO STRG. N6-9 GL-E BT	LISTWA ZACISKOWA WAGO STRG. N6-9 GL-E BT	1
1720	65311933	САЛБНИК M32X1,5 KABLO BEZI M32X1,5	PRENSAESTOPAS M32X1,5	DŁAWNICA M32X1,5	1
	65311934	САЛБНИК M40X1,5 KABLO BEZI M40X1,5	PRENSAESTOPAS M40X1,5	DŁAWNICA M40X1,5	1
1725	65311935	РЕДУКТОР SKINDICHT KU-M M40x1,5/32X1.5 REDÜKTÖR SKINDICHT KU-M M40x1,5/32X1.5	REDUTOR SKINDICHT KU-M M40x1,5/32X1.5	REDUKTOR SKINDICHT KU-M M40x1,5/32X1.5	1
1730	65311936	КОНТРГАЙКА M40X1,5 KILIT SOMUNU M40X1,5	CONTRAPORCA M40X1,5	LOKÓWKA M40X1,5	1
1731	65311937	ПРОХОДНАЯ КЛЕММА WAGO (СЕРАЯ) 2010-1301 DEVRE TERMINALI WAGO (GRI) 2010-1301	BORNE DE PASAGEM WAGO (CINZA) 2010-1301	ZACISK PRZELOTOWY WAGO (SZARY) 2010-1301	1
	65311938	ПРОХОДНАЯ КЛЕММА WAGO (СЕРАЯ) 2016-1301 DEVRE TERMINALI WAGO (GRI) 2016-1301	BORNE DE PASAGEM WAGO (CINZA) 2016-1301	ZACISK PRZELOTOWY WAGO (SZARY) 2016-1301	1
	65312106	ПРОХОДНАЯ КЛЕММА WAGO (СЕРАЯ) 2006-1301 DEVRE TERMINALI WAGO (GRI) 2006-1301	BORNE DE PASAGEM WAGO (CINZA) 2006-1301	ZACISK PRZELOTOWY WAGO (SZARY) 2006-1301	1
1732	65311939	ПРОХОДНАЯ КЛЕММА WAGO (PE) 2016-1307 DEVRE TERMINALI WAGO (PE) 2016-1307	BORNE DE PASAGEM WAGO (PE) 2016-1307	ZACISK PRZELOTOWY WAGO (PE) 2016-1307	1
	65312040	ПРОХОДНАЯ КЛЕММА WAGO (PE) 2010-1307 DEVRE TERMINALI WAGO (PE) 2010-1307	BORNE DE PASAGEM WAGO (PE) 2010-1307	ZACISK PRZELOTOWY WAGO (PE) 2010-1307	1
	65312107	ПРОХОДНАЯ КЛЕММА WAGO (PE) 2006-1307 DEVRE TERMINALI WAGO (PE) 2006-1307	BORNE DE PASAGEM WAGO (PE) 2006-1307	ZACISK PRZELOTOWY WAGO (PE) 2006-1307	1
1735	65311436	СВЕТЯЩАЯСЯ КНОПКА, 3-ПОЗ., С IŞIKLI SEÇIM TUŞU, 3 KADEMELI	INTERRUPTOR RETROILLUM., 3 POS.,BLOQU.	PODŚWIETLANY PRZYCISK WYBORU, 3-STOP., B	1
1740	65311437	СВЕТЯЩАЯСЯ КНОПКА, 3-ПОЗ., С IŞIKLI SEÇIM TUŞU, 3 KADEMELI	INTERRUPTOR RETROILLUM., 3 POS.,BLOQU.	PODŚWIETLANY PRZYCISK WYBORU, 3-STOP., B	1
1745	65326869	ДИСПЛЕЙ БЛОКА УПРАВЛЕНИЯ BT3XX EKRAN KUTU BT3XX	VISOR UNIDADE DE CONTROLE BT3XX	WYŚWIETLACZ MODUŁ BT3XX	1
1750	65311364	ПРОКЛАДКА/ДИСПЛЕЙ 152/140X80/70X2 CONTASI/EKRAN 152/140X80/70X2	GAXETA/VISOR 152/140X80/70X2	USZCZELKA/WYŚWIETLACZ 152/140X80/70X2	1
1755	65311438	СВЕТЯЩАЯСЯ КНОПКА, 2-ПОЗ., СФИКСАЦИЕЙ IŞIKLI SEÇIM TUŞU, 2 KADEMELI	INTERRUPTOR RETROILLUM., 2 POS.,BLOQU.	PODŚWIETLANY PRZYCISK WYBORU, 2-STOP., B	1
2020	65312078	СОПЛО ГОРЕЛКИ D369/400/320 L617 BRÜLÖR BORUSU D369/400/320 L617	TUBO DO QUEIMADOR D369/400/320 L617	RURA PALNIKA D369/400/320 L617	1
	65312079	СОПЛО ГОРЕЛКИ D369/400/320 L757 BRÜLÖR BORUSU D369/400/320 L757	TUBO DO QUEIMADOR D369/400/320 L757	RURA PALNIKA D369/400/320 L757	1
	65312080	СОПЛО ГОРЕЛКИ D369/400/320 L897 BRÜLÖR BORUSU D369/400/320 L897	TUBO DO QUEIMADOR D369/400/320 L897	RURA PALNIKA D369/400/320 L897	1
	65312081	СОПЛО ГОРЕЛКИ D369/415/351 L638 BRÜLÖR BORUSU D369/415/351 L638	TUBO DO QUEIMADOR D369/415/351 L638	RURA PALNIKA D369/415/351 L638	1
	65312082	СОПЛО ГОРЕЛКИ D369/415/351 L778 BRÜLÖR BORUSU D369/415/351 L778	TUBO DO QUEIMADOR D369/415/351 L778	RURA PALNIKA D369/415/351 L778	1
	65312083	СОПЛО ГОРЕЛКИ D369/415/351 L918 BRÜLÖR BORUSU D369/415/351 L918	TUBO DO QUEIMADOR D369/415/351 L918	RURA PALNIKA D369/415/351 L918	1
	65312084	СОПЛО ГОРЕЛКИ D431,5/373 L408 BRÜLÖR BORUSU D431,5/373 L408	TUBO DO QUEIMADOR D431,5/373 L408	RURA PALNIKA D431,5/373 L408	1
	65312085	СОПЛО ГОРЕЛКИ D431,5/373 L558 BRÜLÖR BORUSU D431,5/373 L558	TUBO DO QUEIMADOR D431,5/373 L558	RURA PALNIKA D431,5/373 L558	1
	65312086	СОПЛО ГОРЕЛКИ D431,5/373 L708 BRÜLÖR BORUSU D431,5/373 L708	TUBO DO QUEIMADOR D431,5/373 L708	RURA PALNIKA D431,5/373 L708	1
2110	65311881	ДЕФЛЕКТОР D330/74 BEF.230MM DEFLEKTOR D330/74 BEF.230MM	DEFLECTOR D330/74 BEF.230MM	DEFLEKTOR D330/74 BEF.230MM	1
	65312087	ДЕФЛЕКТОР D320/74X67 20SL DEFLEKTOR D320/74X67 20SL	DEFLECTOR D320/74X67 20SL	DEFLEKTOR D320/74X67 20SL	1
	65312088	ДЕФЛЕКТОР D300/74X67 20SL DEFLEKTOR D300/74X67 20SL	DEFLECTOR D300/74X67 20SL	DEFLEKTOR D300/74X67 20SL	1
2120	65312089	ГАЗОВЫЕ ДИФФУЗОРЫ СТАБИЛИЗАЦИЯ D=13 STABILIZASYON GAZ DIFÜZÖRLER D=13	DIFUSOR GAS DE ESTABILIZAÇÃO D=13	DYSZ GAZU STABILIZACJA D=13	1

	6XXXXXXX	RU TR	PT	PL	X
2130	65312090	ГАЗОВЫЕ ДИФФУЗОРЫ УГЛОВАЯ D=20 AÇISAL GAZ DIFÜZÖRLER D=20	DIFUSOR GAS ANGULAR D=20	KĄTOWE DYSZ GAZU D=20	1
	65312091	ГАЗОВЫЕ ДИФФУЗОРЫ УГЛОВАЯ D=22 AÇISAL GAZ DIFÜZÖRLER D=22	DIFUSOR GAS ANGULAR D=22	KĄTOWE DYSZ GAZU D=22	1
2145	65312094	ЗАТВОР ТРУБКА ГАЗОВЫЕ D30 GAZ TUPLU TAPA D30	OBTURADOR TUBO GAS D30	MIGAWKA BORUSU GAZOWY D30	1
2150	65311710	ТРУБКА ГАЗОВЫЕ D35X2,2X360 GRL. GAZ TUPLU D35X2,2X360 GRL.	TUBO GAS D35X2,2X360 GRL.	BORUSU GAZOWY D35X2,2X360 GRL.	1
	65312092	ГАЗОВЫЕ ДИФФУЗОРЫ УГЛОВАЯ D35/24X56/245 AÇISAL GAZ DIFÜZÖRLER D35/24X56/245	DIFUSOR GAS ANGULAR D35/24X56/245	KĄTOWE DYSZ GAZU D35/24X56/245	1
	65312093	ГАЗОВЫЕ ДИФФУЗОРЫ УГЛОВАЯ D35/27X35/245 AÇISAL GAZ DIFÜZÖRLER D35/27X35/245	DIFUSOR GAS ANGULAR D35/27X35/245	KĄTOWE DYSZ GAZU D35/27X35/245	1
	65312095	ТРУБКА ГАЗОВЫЕ D35X2,2X300 GAZ TUPLU D35X2,2X300	TUBO GAS D35X2,2X300	BORUSU GAZOWY D35X2,2X300	1
2160	65311702	ТРУБКА ГАЗОВЫЕ D35X2,2X360 GAZ TUPLU D35X2,2X360	TUBO GAS D35X2,2X360	BORUSU GAZOWY D35X2,2X360	1
	65311882	ТРУБКА ГАЗОВЫЕ D35X2,2X257 РЕГУЛИРУЕМЫЙ GAZ TUPLU D35X2,2X257 AYARLANABILIR	TUBO GAS D35X2,2X257 AJUSTÁVEL	BORUSU GAZOWY D35X2,2X257 NASTAWNY	1
2170	65311683	ГАЗОВЫЕ ДИФФУЗОРЫ D30x2/D12x1,5 GAZ DIFÜZOERÜ D30x2/D12x1,5	BICO DE GÁS D30x2/D12x1,5	DYSZA GAZU D30x2/D12x1,5	1
	65312096	ГАЗОВЫЕ ДИФФУЗОРЫ D30X2/10X1,5X103 GAZ DIFÜZÖRLER D30X2/10X1,5X103	DIFUSOR GAS D30X2/10X1,5X103	DYSZ GAZU D30X2/10X1,5X103	1
2171	65312013	ГАЗОВЫЕ ДИФФУЗОРЫ D30X2/D12X1 L73 GAZ DIFÜZÖRLER D30X2/D12X1 L73	DIFUSOR GAS D30X2/D12X1 L73	DYSZ GAZU D30X2/D12X1 L73	1
2180	65311712	ГАЗОВЫЙ ТРУБКА D35X2.2X45GR. GAZ TUPLU D35X2.2X45GR.	TUBO GAS D35X2.2X45GR.	BORUSU GAZOWY D35X2.2X45GR.	1
	65312097	ТРУБКА ГАЗОВЫЕ D35X2,2X220/50 GAZ TUPLU D35X2,2X220/50	TUBO GAS D35X2,2X220/50	BORUSU GAZOWY D35X2,2X220/50	1
	65312098	ТРУБКА ГАЗОВЫЕ D35X2,2X100/35 GAZ TUPLU D35X2,2X100/35	TUBO GAS D35X2,2X100/35	BORUSU GAZOWY D35X2,2X100/35	1
2200	1728777751	КАБЕЛЬ РОЗЖИГАD6,4/D6,4 L1500 AP ATEŞLEME KABLOSU D6,4/D6,4 L1500 AP	CABO ENCENDIDO D6,4/D6,4 L1500 AP	PRZEWÓD ALU. D6,4/D6,4 L1500 AP	1
2201	65310724	КАБЕЛЬ РОЗЖИГАD4/SAT 72750 ATEŞLEME KABLOSU D4/SAT 72750	CABO ENCENDIDO D4/SAT 72750	PRZEWÓD ALU. D4/SAT 72750	1
2210	65311662	ДЕРЖАТЕЛЬ ЭЛЕКТРОД DESTEĞI ELEKTROD	SUPORTE ELETRODO	WSPORNIK ELEKTRODA	1
2230	65311690	ЭЛЕКТРОД ЗАЖИ. D11X100 D6,4 D2,5X59 45° ATEŞLEYICI ELEKT.D11X100 D6,4D2,5X59 45°	ELETRODO ENC. D11X100 D6,4 D2,5X59 45°	ELEKTRODA ALU. D11X100 D6,4 D2,5X59 45°	1
	65313846	ЭЛЕКТРОД ЗАЖИ.D11X100D6,4D2,5X150 27/90° ATEŞLEYICI EL.D11X100D6,4D2,5X150 27/90°	ELETRODO ENC. D11X100D6,4D2,5X150 27/90°	ELEKTRODA ALU.D11X100D6,4D2,5X150 27/90°	1
2250	65311713	ПРОКЛАДКА/OVAL ФЛАНЕЦ 210X160X2 D116 CONTASI/OVAL FLANŞI 210X160X2 D116	GAXETA/OVAL FLANGE 210X160X2 D116	USZCZELKA/OVAL KOŁNIERZ 210X160X2 D116	1
2260	65312022	ЦЕНТРИРОВАНИЯ СТОЛБ N8/EKEVO8 MERKEZLEME AYAĞI N8/EKEVO8	PILAR DE CENTRAGEM N8/EKEVO8	CENTROWANIE FILAR N8/EKEVO8	1
	65312023	ЦЕНТРИРОВАНИЯ СТОЛБ N9/EKEVO9 MERKEZLEME AYAĞI N9/EKEVO9	PILAR DE CENTRAGEM N9/EKEVO9	CENTROWANIE FILAR N9/EKEVO9	1
2320	65312099	ЦЕНТРИРОВАНИЕ ЛИНИЯ ФОРСУНКИ DM35 MERKEZLEME PÜSKÜRTME MEMESI HATTI DM35	CIMBRE LÍNEA DE BOQUILLA DM35	KRĄŻYNA UKŁAD DYSZY DM35	1
2330	65312100	ДЕРЖАТЕЛЬ ЦЕНТРИРОВАНИЯ СТОЛБ DESTEĞI MERKEZLEME AYAĞI	SUPORTE PILAR DE CENTRAGEM	WSPORNIK CENTROWANIE FILAR	1
2350	1728703262	ЭЛЕКТРОД ЗАЖИ. D11X220D3X150 20° L150 D4 ATEŞLEYI.ELEKT.D11X220D3X150 20° L150 D4	ELETRODO ENC. D11X220 D3X150 20° L150 D4	ELEKTROD.ALU. D11X220 D3X150 20° L150 D4	1
2360	65312141	ЦЕНТРИРУЮЩЕЕ КОЛЬЦО MERKEZLEME HALKASI	ANEL DE CENTRAGEM	PIERŚCIEŃ CENTRUJĄCY	1
2380	65310280	ЛИНИЯ ФОРСУНКИ RDG 1250D35 L860 PÜSKÜRTME MEM.HATTI RDG 1250D35 L860	LÍNEA DE BOQUILLA RDG 1250D35 L860	UKŁAD DYSZY RDG 1250D35 L860	1
	65311817	ЛИНИЯ ФОРСУНКИ RDG 1250D35 L760 PÜSKÜRTME MEM.HATTI RDG 1250D35 L760	LÍNEA DE BOQUILLA RDG 1250D35 L760	UKŁAD DYSZY RDG 1250D35 L760	1
	65311818	ЛИНИЯ ФОРСУНКИ RDG 1250D35 L960 PÜSKÜRTME MEM.HATTI RDG 1250D35 L960	LÍNEA DE BOQUILLA RDG 1250D35 L960	UKŁAD DYSZY RDG 1250D35 L960	1
	65311884	ЛИНИЯ ФОРСУНКИ RDG1250 L660 PÜSKÜRTME MEMESI HATTI RDG1250 L660	LÍNEA DE BOQUILLA RDG1250 L660	UKŁAD DYSZY RDG1250 L660	1
	65312102	ЛИНИЯ ФОРСУНКИ D35 L560 PÜSKÜRTME MEM.HATTI D35 L560	LÍNEA DE BOQUILLA D35 L560	UKŁAD DYSZY D35 L560	1
2490	65311435	ШЛАНГ DN16 L500 ESNEK DN16 L500	FLEXIVEL DN16 L500	PRZEWÓD GIĘTKI DN16 L500	1
2810	65311406	НАСОСНЫЙ АГРЕГА.SMG1630-I-4-SO-IE3 30BAR POMPA ÜNITESI SMG1630-I-4-SO-IE3 30BAR	GRUPO DE BOMBA SMG1630-I-4-SO-IE3 30BAR	AGREGAT POMPY SMG1630-I-4-SO-IE3 30BAR	1
	65312103	НАСОСНЫЙ АГРЕГА.SMG1631-I-4-SO-IE3 30BAR POMPA ÜNITESI SMG1631-I-4-SO-IE3 30BAR	GRUPO DE BOMBA SMG1631-I-4-SO-IE3 30BAR	AGREGAT POMPY SMG1631-I-4-SO-IE3 30BAR	1
2815	65311407	ЭЛЕКТРОДВИГ.3KW 230/400V D28 1400T/MN GM MOTORU 3KW 230/400V D28 1400 TR/MN GMP	MOTOR 3KW 230/400V D28 1400 TR/MN GMP	SILNIK 3KW 230/400V D28 1400 TR/MN GMP	1

	6XXXXXXX	RU TR	PT	PL	X
	65312104	ЭЛЕКТРОДВИГ.4KW400/690VD28 1400TR/MN IE3 MOTORU 4KW400/690V D28 1400TR/MN GMP IE3	MOTOR 4KW400/690V D28 1400TR/MN GMP IE3	SILNIK 4KW400/690V D28 1400TR/MN GMP IE3	1
2820	1238795399	СЦЕПЛЕНИЕ D24/28 PW DM18/MW KAPLİN D24/28 PW DM18/MW	ACOPLAMENTO D24/28 PW DM18/MW	ŁĄCZNIK D24/28 PW DM18/MW	1
	1238795402	СЦЕПЛЕНИЕ D28/38 PW DM22/MW KAPLİN D28/38 PW DM22/MW	ACOPLAMENTO D28/38 PW DM22/MW	ŁĄCZNIK D28/38 PW DM22/MW	1
2821	1238795424	СЦЕПЛЕНИЕ D24/28 GMP KAPLİN D24/28 GMP	ACOPLAMENTO D24/28 GMP	ŁĄCZNIK D24/28 GMP	1
	1238795435	СЦЕПЛЕНИЕ D28/38 KAPLİN D28/38	ACOPLAMENTO D28/38	ŁĄCZNIK D28/38	1
2825	65311410	НАСОС VBHRG I 410 SO 1700L/H POMPA VBHRG I 410 SO 1700L/H	BOMBA VBHRG I 410 SO 1700L/H	POMPA VBHRG I 410 SO 1700L/H	1
	65312105	НАСОС VBHRG 2200L/H POMPA VBHRG 2200L/H	BOMBA VBHRG 2200L/H	POMPA VBHRG 2200L/H	1
2826	13019380	КОМПЛЕКТ ПРОКЛАДОК / НАСОС D18 CONTA SETI / POMPASI D18	CONJUNTO DE GAXETAS / BOMBA D18	ZESTAW USZCZELNIAJĄCY / POMPA D18	1
	5788707026	КОМПЛЕКТ ПРОКЛАДОК D22 CONTA SETI D22	CONJUNTO DE GAXETAS D22	ZESTAW USZCZELNIAJĄCY D22	1
2830	13022666	ЭЛЕКТРОКЛАПАН LUC 321F2523 P8 PG11 19W ELECTROVANA LUC 321F2523 P8 PG11 19W	ELECTROVALVULA LUC 321F2523 P8 PG11 19W	ELEKTROZAWOR LUC 321F2523 P8 PG11 19W	1
	13022667	ЭЛЕКТРОКЛАПАН LUC 121F2523 P8 PG11 19W ELECTROVANA LUC 121F2523 P8 PG11 19W	ELECTROVALVULA LUC 121F2523 P8 PG11 19W	ELEKTROZAWOR LUC 121F2523 P8 PG11 19W	1
2840	65311572	МАНОМЕТР ГЛИЦЕРИН D 63 0-40 BAR G1/4 GLISERIN MANOMETRE D 63 0-40 BAR G1/4	MANOMETRO GLICERINA D 63 0-40 BAR G1/4	MANOMETR GLICERYNA D 63 0-40 BAR G1/4	1
2850	65311831	ПРОКЛАДОЧНОЕ КОЛЬЦО M6/M8X42 SW15 PASPAYI M6/M8X42 SW15	ESPAÇADOR M6/M8X42 SW15	ROZPÓRKA M6/M8X42 SW15	1
2860	65311412	ПЛАСТИНА СЕРВОДВИГАТЕЛЬ STE SERVOMOTOR STE PLAKA	PRATO DO SERVOMOTOR STE	PŁYTA SERWOMOTOR STE	1
2870	65311650	СЕРВОДВИГАТЕ STE4,5 Q3.51/6+КАБЕЛЬ L3000 SERVOMOTOR STE 4,5 Q3.51/6+KABLOSU L3000	SERVOMOTOR STE 4,5 Q3.51/6+CABO L3000	SERWOMOTOR STE 4,5 Q3.51/6+PRZEWÓD L3000	1
	65311833	СЕРВОДВИГАТЕЛЬ STM 40 Q15.51/8 2NR SERVOMOTOR STM 40 Q15.51/8 2NR	SERVOMOTOR STM 40 Q15.51/8 2NR	SERWOMOTOR STM 40 Q15.51/8 2NR	1
2880	65312206	РЕЛЕ ДАВ. ВОЗДУХА DSB 158 F931 3-25BAR YAKIT BASINÇ ŞALT. DSB 158 F931 3-25BAR	PRESSOSTATO FUEL DSB 158 F931 3-25BAR	CZUJNIK CIŚ.OLEJU OP.DSB158 F931 3-25BAR	1
2890	65311616	ПРОКЛАДКА GDM 3-21 CONTASI GDM 3-21	GAXETA GDM 3-21	USZCZELKA GDM 3-21	1
2900	65311615	РАЗЪЕМ GDMW 30-11 DF PRIZ GDMW 30-11 DF	TOMADA GDMW 30-11 DF	GNIAZDO GDMW 30-11 DF	1
2910	13019342	ШЛАНГ M30X1,5 DN20 L=1500 ESNEK M30X1,5 DN20 L=1500	FLEXIVEL M30X1,5 DN20 L=1500	PRZEWÓD GIĘTKI M30X1,5 DN20 L=1500	1
	1488436955	ШЛАНГ M38X1,5 DN25 L=1500 ESNEK M38X1,5 DN25 L=1500	FLEXIVEL M38X1,5 DN25 L=1500	PRZEWÓD GIĘTKI M38X1,5 DN25 L=1500	1
2920	65311414	Т-ШТУЦЕР R1Z (ФИЛЬТР) OVE T-RAKOR R1Z (FILTRE) OVE	UNIÃO EM T R1Z (FILTRO) OVE	T-ZŁĄCZE R1Z (FILTR) OVE	1
	65311578	ФИЛЬТР ТОПЛИВА RP3/4 PN16 YAKIT FILTRESI RP3/4 PN16	FILTRO FUEL RP3/4 PN16	FILTR OLEJU RP3/4 PN16	1
3005	65311613	ПРОКЛАДКА/ГАЗОВАЯ РАМПА D162/115X2 DN100 CONTASI/GAZ RAMPASI D162/115X2 DN100	GAXETA/RAMPA DE GAS D162/115X2 DN100	USZCZELKA/RAMPA GAZOWA D162/115X2 DN100	1
3010	65311678	КОЛЛЕКТОР DN100-R2Z 2G1/4 PN16 MANIFOLD DN100-R2Z 2G1/4 PN16	COLETOR DN100-R2Z 2G1/4 PN16	KOLEKTOR DN100-R2Z 2G1/4 PN16	1
3020	65311606	ПРЯМОЙ ШТУЦЕР P-GEV 8LR-WD-VI SAĞ RAKOR P-GEV 8LR-WD-VI	UNIÃO DIREITA P-GEV 8LR-WD-VI	ZŁĄCZE PRAWE P-GEV 8LR-WD-VI	1
3030	65311604	УГЛОВОЙ ШТУЦЕР P-EWV 8-L DIRSEKLI RAKOR P-EWV 8-L	UNIÃO COTOVELO P-EWV 8-L	ZŁĄCZKA TYPU KOLANKO P-EWV 8-L	1
3040	65311579	ШТУЦЕР ОТБОРА ДАВЛЕНИЯ R1/4Z+УПЛОТ. BASINÇ GIRIŞI R1/4Z+CONTA	TOMADA DE PRESSÃO R1/4Z+JUNTA	GNIAZ. POMIARU CIŚNIEN. R1/4Z+USZCZEL	1
3060	65311581	ГАЗОВЫЙ КЛАПАН VGD20 5011 RP2" GAZ VANASI VGD20 5011 RP2"	VALVULA GAS VGD20 5011 RP2"	ZAWÓR GAZOWY VGD20 5011 RP2"	1
3070	65107100	СЕРВОДВИГАТЕЛЬ SKP25.003 E2 БЕЗ КОНЦЕВЫ SERVOMOTOR SKP 25.003 E2 LIMIT ANAHTAR	SERVOMOT. GÁS SKP25.003 E2 SEM FIM CURSO	SERWOSILNIK SKP25.003E2 BEZ WYŁĄCZNIKI	1
3080	65311585	СОЕДИНИТЕЛ.КАБЕЛЬ AGA 62 PLUG DIN L270 BAĞLANTI KABLOSU AGA 62 PLUG DIN L270	CABO DE CONEXÃO AGA 62 TOMADA DIN L270	POŁĄCZENIOW. KABEL AGA 62 PLUG DIN L270	1
3090	1478836180	СЕРВОДВИГАТЕЛЬ SKP15.000E2 БЕЗ КОНЦЕВЫ SERVOMOTOR SKP15.000E2 LIMIT ANAHTAR	SERVOMOTOR GAS SKP15.000E2 SEM FIM CURSA	SERWOSILNIK SKP15.000E2 BEZ WYŁĄCZNIKI	1
3110	65311377	ФЛАНЕЦ AGF10.50 RP2 FLANŞI AGF10.50 RP2	FLANGE AGF10.50 RP2	KOŁNIERZ AGF10.50 RP2	1
3120	65310852	РЕЛЕ ДАВ. ВОЗДУХА GW 500 A5 30-500MB GAZ BASINÇ ŞALT. GW 500 A5 30-500MB	PRESSOSTATO GÁS GW 500 A5 30-500MB	CZUJNIK CIŚ. GAZU GW 500 A5 30-500MB	1
	65323022	РЕЛЕ ДАВ. ВОЗДУХА GW 150 A6 5-150MB DIN GAZ BASINÇ ŞALT. GW 150 A6 5-150MB DIN	PRESSOSTATO GAS GW 150 A6 5-150MB DIN	CZUJNIK CIŚ. GAZU GW 150 A6 5-150MB DIN	1
3130	65311586	ГНЕЗДОВОЙ РАЗЪЕМ AGA64 DİŞİ PRIZ AGA64	TOMADA FÊMEA AGA64	GNIAZDO AGA64	1

	6XXXXXXX	RU TR	PT	PL	X
3140	65311615	РАЗЪЕМ GDMW 30-11 DF PRIZ GDMW 30-11 DF	TOMADA GDMW 30-11 DF	GNIAZDO GDMW 30-11 DF	1
3300	65311459	ГАЗОВЫЙ ФИЛЬТР GF80M-1616-A-1 RP2 1BAR GAZ FILTR. GF80M-1616-A-1 RP2 1BAR	FILTRO GÁS GF80M-1616-A-1 RP2 1BAR	FILTR GAZU GF80M-1616-A-1 RP2 1BAR	1
3301	65311361	ФИЛЬТРУЮЩИЙ ЭЛЕМЕНТ RP 1 1/2+O-RING FİLTRE ELEMANI RP 1 1/2+O-RING	ELEMENTO FILTRANTE RP 1 1/2+O-RING	WKŁAD FILTRA RP 1 1/2+O-RING	1
3505	65311613	ПРОКЛАДКА/ГАЗОВАЯ РАМПА D162/115X2 DN100 CONTASI/GAZ RAMPASI D162/115X2 DN100	GAXETA/RAMPA DE GAS D162/115X2 DN100	USZCZELKA/RAMPA GAZOWA D162/115X2 DN100	1
3510	65311973	КОЛЛЕКТОР DN100 / R2 MANIFOLD DN100 / R2	COLETOR DN100 / R2	KOLEKTOR DN100 / R2	1
3580	65311840	ГАЗОВЫЙ КЛАПАН MBC1200SES82RP2'' 5-80MB GAZ VANA. MBC1200 SE S82 RP2'' 5-80 MB	VÁLVULA GÁS MBC1200 SE S82 RP2'' 5-80MBA	ZAWÓR GAZ. MBC1200SES82 RP2'' 5-80MB	1
3620	65313022	ФЛАНЕЦ MBC700/1200 RP2 FLANŞI MBC700/1200 RP2	FLANGE MBC700/1200 RP2	KOŁNIERZ MBC700/1200 RP2	1
3640	65310852	РЕЛЕ ДАВ. ВОЗДУХА GW 500 A5 30-500MB GAZ BASINÇ ŞALT. GW 500 A5 30-500MB	PRESSOSTATO GÁS GW 500 A5 30-500MB	CZUJNIK CIŚ. GAZU GW 500 A5 30-500MB	1
	65311598	РЕЛЕ ДАВ. ВОЗДУХА GW 150 A5 30-150MB GAZ BASINÇ ŞALT. GW 150 A5 30-150MB	PRESSOSTATO GAS GW 150 A5 30-150MB	CZUJNIK CIŚ. GAZU GW 150 A5 30-150MB	1
3650	65311615	РАЗЪЕМ GDMW 30-11 DF PRIZ GDMW 30-11 DF	TOMADA GDMW 30-11 DF	GNIAZDO GDMW 30-11 DF	1
3700	13022417	ФИЛЬТРУЮЩИЙ ЭЛЕМЕНТ MBC 1200 FİLTRE ELEMANI MBC 1200	ELEMENTO FILTRANTE MBC 1200	WKŁAD FILTRA MBC 1200	1
3800	65311459	ГАЗОВЫЙ ФИЛЬТР GF80M-1616-A-1 RP2 1BAR GAZ FILTR. GF80M-1616-A-1 RP2 1BAR	FILTRO GÁS GF80M-1616-A-1 RP2 1BAR	FILTR GAZU GF80M-1616-A-1 RP2 1BAR	1
3801	65311361	ФИЛЬТРУЮЩИЙ ЭЛЕМЕНТ RP 1 1/2+O-RING FİLTRE ELEMANI RP 1 1/2+O-RING	ELEMENTO FILTRANTE RP 1 1/2+O-RING	WKŁAD FILTRA RP 1 1/2+O-RING	1
4005	65311613	ПРОКЛАДКА/ГАЗОВАЯ РАМПА D162/115X2 DN100 CONTASI/GAZ RAMPASI D162/115X2 DN100	GAXETA/RAMPA DE GAS D162/115X2 DN100	USZCZELKA/RAMPA GAZOWA D162/115X2 DN100	1
4010	65311674	КОЛЛЕКТОР DN100/DN65 MANIFOLD DN100/DN65	COLETOR DN100/DN65	KOLEKTOR DN100/DN65	1
	65311675	КОЛЛЕКТОР DN100-DN80 PN16 MANIFOLD DN100-DN80 PN16	COLETOR DN100-DN80 PN16	KOLEKTOR DN100-DN80 PN16	1
	65311676	КОЛЛЕКТОР DN100/DN100 MANIFOLD DN100/DN100	COLETOR DN100/DN100	KOLEKTOR DN100/DN100	1
	65311677	КОЛЛЕКТОР DN100/DN125 MANIFOLD DN100/DN125	COLETOR DN100/DN125	KOLEKTOR DN100/DN125	1
4020	65311601	ПРЯМОЙ ШТУЦЕР P-EGES 12L/R 1/4WD SAĞ RAKOR P-EGES 12L/R 1/4WD	CONEXÃO DIREITA P-EGES 12L/R 1/4WD	ZŁĄCZE PRAWE P-EGES 12L/R 1/4WD	1
4030	65311608	ШТУЦЕР (ЛОКОТЬ) P-EWV12L-SV RAKOR (DIRSEK) P-EWV12L-SV	UNIÃO (COTOVELO) P-EWV12L-SV	ZŁĄCZE (ŁOKIEĆ) P-EWV12L-SV	1
4040	65311605	ШТУЦЕР P-KV12L RAKOR P-KV12L	CONEXÃO P-KV12L	ZŁĄCZE P-KV12L	1
4060	65311607	КРЫШКА D15/10X21 VSD 12L/S O.M.MB TAPA D15/10X21 VSD 12L/S O.M.MB	TAMPA D15/10X21 VSD 12L/S O.M.MB	NAKRĘTKA D15/10X21 VSD 12L/S O.M.MB	1
4070	65311601	ПРЯМОЙ ШТУЦЕР P-EGES 12L/R 1/4WD SAĞ RAKOR P-EGES 12L/R 1/4WD	CONEXÃO DIREITA P-EGES 12L/R 1/4WD	ZŁĄCZE PRAWE P-EGES 12L/R 1/4WD	1
4080	65311453	ГАЗОВЫЙ КЛАПАН VGD40 125 DN125 GAZ VANASI VGD40 125 DN125	VALVULA GAS VGD40 125 DN125	ZAWÓR GAZOWY VGD40 125 DN125	1
	65311583	ГАЗОВЫЙ КЛАПАН VGD40 080 DN80 GAZ VANASI VGD40 080 DN80	VALVULA GAS VGD40 080 DN80	ZAWÓR GAZOWY VGD40 080 DN80	1
	65311590	ГАЗОВЫЙ КЛАПАН VGD40 100 DN100 GAZ VANASI VGD40 100 DN100	VALVULA GAS VGD40 100 DN100	ZAWÓR GAZOWY VGD40 100 DN100	1
	65323661	ГАЗОВЫЙ КЛАПАН VGD40 065 DN65 GAZ VANASI VGD40 065 DN65	VÁLVULA GÁS VGD40 065 DN65	ZAWÓR GAZOWY VGD40 065 DN65	1
4090	65107100	СЕРВОДВИГАТЕЛЬ SKP25.003 E2 БЕЗ КОНЦЕВЫ SERVOMOTOR SKP 25.003 E2 LIMIT ANAHTAR	SERVOMOT. GÁS SKP25.003 E2 SEM FIM CURSO	SERWOSILNIK SKP25.003E2 BEZ WYŁĄCZNIKI	1
4100	65311585	СОЕДИНИТЕЛ.КАБЕЛЬ AGA 62 PLUG DIN L270 BAĞLANTI KABLOSU AGA 62 PLUG DIN L270	CABO DE CONEXÃO AGA 62 TOMADA DIN L270	POŁĄCZENIOW. KABEL AGA 62 PLUG DIN L270	1
4110	1478836180	СЕРВОДВИГАТЕЛЬ SKP15.000E2 БЕЗ КОНЦЕВЫ SERVOMOTOR SKP15.000E2 LIMIT ANAHTAR	SERVOMOTOR GAS SKP15.000E2 SEM FIM CURSA	SERWOSILNIK SKP15.000E2 BEZ WYŁĄCZNIKI	1
4120	65311611	ПРОКЛАДКА/ГАЗОВАЯ РАМПА D127/77X2 DN65 CONTASI/GAZ RAMPASI D127/77X2 DN65	GAXETA/RAMPA DE GAS D127/77X2 DN65	USZCZELKA/RAMPA GAZOWA D127/77X2 DN65	1
	65311612	ПРОКЛАДКА/ГАЗОВАЯ РАМПА D142/90X2 DN80 CONTASI/GAZ RAMPASI D142/90X2 DN80	GAXETA/RAMPA DE GAS D142/90X2 DN80	USZCZELKA/RAMPA GAZOWA D142/90X2 DN80	1
	65311613	ПРОКЛАДКА/ГАЗОВАЯ РАМПА D162/115X2 DN100 CONTASI/GAZ RAMPASI D162/115X2 DN100	GAXETA/RAMPA DE GAS D162/115X2 DN100	USZCZELKA/RAMPA GAZOWA D162/115X2 DN100	1
	65311614	ПРОКЛАДКА/ГАЗОВАЯ РАМПА D192/141X2 DN125 CONTASI/GAZ RAMPASI D192/141X2 DN125	GAXETA/RAMPA DE GAS D192/141X2 DN125	USZCZELKA/RAMPA GAZOWA D192/141X2 DN125	1
4130	65311586	ГНЕЗДОВОЙ РАЗЪЕМ AGA64 DİŞİ PRIZ AGA64	TOMADA FÊMEA AGA64	GNIAZDO AGA64	1
4140	65311615	РАЗЪЕМ GDMW 30-11 DF PRIZ GDMW 30-11 DF	TOMADA GDMW 30-11 DF	GNIAZDO GDMW 30-11 DF	1

	6XXXXXXX	RU TR	PT	PL	X
4150	65310852	РЕЛЕ ДАВ. ВОЗДУХА GW 500 A5 30-500MB GAZ BASINÇ ŞALT. GW 500 A5 30-500MB	PRESSOSTATO GÁS GW 500 A5 30-500MB	CZUJNIK CIŚ. GAZU GW 500 A5 30-500MB	1
	65323022	РЕЛЕ ДАВ. ВОЗДУХА GW 150 A6 5-150MB DIN GAZ BASINÇ ŞALT. GW 150 A6 5-150MB DIN	PRESSOSTATO GAS GW 150 A6 5-150MB DIN	CZUJNIK CIŚ. GAZU GW 150 A6 5-150MB DIN	1
4300	65311460	ГАЗОВЫЙ ФИЛЬТР GF65MF-2020-A-1 DN65 1BAR GAZ FILTR. GF65MF-2020-A-1 DN65 1BAR	FILTRO GÁS GF65MF-2020-A-1 DN65 1BAR	FILTR GAZU GF65MF-2020-A-1 DN65 1BAR	1
	65311461	ГАЗОВЫЙ ФИЛЬТР GF80MF-2424-A-1 DN80 1BAR GAZ FILTR. GF80MF-2424-A-1 DN80 1BAR	FILTRO GÁS GF80MF-2424-A-1 DN80 1BAR	FILTR GAZU GF80MF-2424-A-1 DN80 1BAR	1
	65311462	ГАЗОВЫЙ ФИЛЬТР GF100MF-3232-A-1 DN100 1B GAZ FILTR. GF100MF-3232-A-1 DN100 1BAR	FILTRO GÁS GF100MF-3232-A-1 DN100 1BAR	FILTR GAZU GF100MF-3232-A-1 DN100 1BAR	1
	65311463	ГАЗОВЫЙ ФИЛЬТР GF125MF-4040-A-1 DN125 1B GAZ FILTR. GF125MF-4040-A-1 DN125 1BAR	FILTRO GÁS GF125MF-4040-A-1 DN125 1BAR	FILTR GAZU GF125MF-4040-A-1 DN125 1BAR	1
4301	65311723	ФИЛЬТРУЮЩИЙ ЭЛЕМЕНТ GF 65 MF FİLTRE ELEMANI GF 65 MF	ELEMENTO FILTRANTE GF 65 MF	WKŁAD FILTRA GF 65 MF	1
	65311888	ФИЛЬТРУЮЩИЙ ЭЛЕМЕНТ GF 80 MF FİLTRE ELEMANI GF 80 MF	ELEMENTO FILTRANTE GF 80 MF	WKŁAD FILTRA GF 80 MF	1
	65311889	ФИЛЬТРУЮЩИЙ ЭЛЕМЕНТ GF 100 MF FİLTRE ELEMANI GF 100 MF	ELEMENTO FILTRANTE GF 100 MF	WKŁAD FILTRA GF 100 MF	1
	65311890	ФИЛЬТРУЮЩИЙ ЭЛЕМЕНТ GF 125 MF FİLTRE ELEMANI GF 125 MF	ELEMENTO FILTRANTE GF 125 MF	WKŁAD FILTRA GF 125 MF	1
4505	65311613	ПРОКЛАДКА/ГАЗОВАЯ РАМПА D162/115X2 DN100 CONTASI/GAZ RAMPASI D162/115X2 DN100	GAXETA/RAMPA DE GAS D162/115X2 DN100	USZCZELKA/RAMPA GAZOWA D162/115X2 DN100	1
4510	65311674	КОЛЛЕКТОР DN100/DN65 MANIFOLD DN100/DN65	COLETOR DN100/DN65	KOLEKTOR DN100/DN65	1
	65311675	КОЛЛЕКТОР DN100-DN80 PN16 MANIFOLD DN100-DN80 PN16	COLETOR DN100-DN80 PN16	KOLEKTOR DN100-DN80 PN16	1
	65311676	КОЛЛЕКТОР DN100/DN100 MANIFOLD DN100/DN100	COLETOR DN100/DN100	KOLEKTOR DN100/DN100	1
4520	65311601	ПРЯМОЙ ШТУЦЕР P-EGES 12L/R 1/4WD SAĞ RAKOR P-EGES 12L/R 1/4WD	CONEXÃO DIREITA P-EGES 12L/R 1/4WD	ZŁĄCZE PRAWE P-EGES 12L/R 1/4WD	1
4530	65311344	Т-ШТУЦЕР P-TV 12 L T-RAKOR P-TV 12 L	CONEXÃO EM T P-TV 12 L	T-ZŁĄCZKA P-TV 12 L	1
4560	65311607	КРЫШКА D15/10X21 VSD 12L/S O.M.MB TAPA D15/10X21 VSD 12L/S O.M.MB	TAMPA D15/10X21 VSD 12L/S O.M.MB	NAKRĘTKA D15/10X21 VSD 12L/S O.M.MB	1
4580	65311844	ГАЗОВЫЙ КЛАПАН MBC1900SEDN65 40-80MBAR GAZ VANASI MBC1900SE DN65 40-80 MBAR	VÁLVULA GÁS MBC1900SE DN65 40-80MBAR	ZAWÓR GAZ. MBC1900SE DN65 40-80 MBAR	1
	65311845	ГАЗОВЫЙ КЛАПАН MBC3100SE DN80 40-80MBAR GAZ VANASI MBC3100SE DN80 40-80 MBAR	VÁLVULA GÁS MBC3100 SE DN80 40-80 MBAR	ZAWÓR GAZ. MBC3100SE DN80 40-80 MBAR	1
	65311846	ГАЗОВЫЙ КЛАПАН MBC5000SE DN100 40-80MB GAZ VANASI MBC5000 SE DN100 40-80 MB	VÁLVULA GÁS MBC5000 SE DN100 40-80 MBAR	ZAWÓR GAZ.MBC5000SE DN100 40-80MBAR	1
4620	65311611	ПРОКЛАДКА/ГАЗОВАЯ РАМПА D127/77X2 DN65 CONTASI/GAZ RAMPASI D127/77X2 DN65	GAXETA/RAMPA DE GAS D127/77X2 DN65	USZCZELKA/RAMPA GAZOWA D127/77X2 DN65	1
	65311612	ПРОКЛАДКА/ГАЗОВАЯ РАМПА D142/90X2 DN80 CONTASI/GAZ RAMPASI D142/90X2 DN80	GAXETA/RAMPA DE GAS D142/90X2 DN80	USZCZELKA/RAMPA GAZOWA D142/90X2 DN80	1
	65311613	ПРОКЛАДКА/ГАЗОВАЯ РАМПА D162/115X2 DN100 CONTASI/GAZ RAMPASI D162/115X2 DN100	GAXETA/RAMPA DE GAS D162/115X2 DN100	USZCZELKA/RAMPA GAZOWA D162/115X2 DN100	1
4640	65310852	РЕЛЕ ДАВ. ВОЗДУХА GW 500 A5 30-500MB GAZ BASINÇ ŞALT. GW 500 A5 30-500MB	PRESSOSTATO GÁS GW 500 A5 30-500MB	CZUJNIK CIŚ. GAZU GW 500 A5 30-500MB	1
	65323022	РЕЛЕ ДАВ. ВОЗДУХА GW 150 A6 5-150MB DIN GAZ BASINÇ ŞALT. GW 150 A6 5-150MB DIN	PRESSOSTATO GAS GW 150 A6 5-150MB DIN	CZUJNIK CIŚ. GAZU GW 150 A6 5-150MB DIN	1
4650	65311615	РАЗЪЕМ GDMW 30-11 DF PRIZ GDMW 30-11 DF	TOMADA GDMW 30-11 DF	GNIAZDO GDMW 30-11 DF	1
4800	65311460	ГАЗОВЫЙ ФИЛЬТР GF65MF-2020-A-1 DN65 1BAR GAZ FILTR. GF65MF-2020-A-1 DN65 1BAR	FILTRO GÁS GF65MF-2020-A-1 DN65 1BAR	FILTR GAZU GF65MF-2020-A-1 DN65 1BAR	1
	65311461	ГАЗОВЫЙ ФИЛЬТР GF80MF-2424-A-1 DN80 1BAR GAZ FILTR. GF80MF-2424-A-1 DN80 1BAR	FILTRO GÁS GF80MF-2424-A-1 DN80 1BAR	FILTR GAZU GF80MF-2424-A-1 DN80 1BAR	1
	65311462	ГАЗОВЫЙ ФИЛЬТР GF100MF-3232-A-1 DN100 1B GAZ FILTR. GF100MF-3232-A-1 DN100 1BAR	FILTRO GÁS GF100MF-3232-A-1 DN100 1BAR	FILTR GAZU GF100MF-3232-A-1 DN100 1BAR	1
4801	65311723	ФИЛЬТРУЮЩИЙ ЭЛЕМЕНТ GF 65 MF FİLTRE ELEMANI GF 65 MF	ELEMENTO FILTRANTE GF 65 MF	WKŁAD FILTRA GF 65 MF	1
	65311888	ФИЛЬТРУЮЩИЙ ЭЛЕМЕНТ GF 80 MF FİLTRE ELEMANI GF 80 MF	ELEMENTO FILTRANTE GF 80 MF	WKŁAD FILTRA GF 80 MF	1
	65311889	ФИЛЬТРУЮЩИЙ ЭЛЕМЕНТ GF 100 MF FİLTRE ELEMANI GF 100 MF	ELEMENTO FILTRANTE GF 100 MF	WKŁAD FILTRA GF 100 MF	1
5001	1458645325	ФОРСУНКА BER 350KG 55° CBM PÜSK. MEMESI BER 350KG 55° CBM	BOQUILLA BER 350KG 55° CBM	DYSZA BER 350KG 55° CBM	1
	1458645347	ФОРСУНКА BER 400KG 55° CBM PÜSK. MEMESI BER 400KG 55° CBM	BOQUILLA BER 400KG 55° CBM	DYSZA BER 400KG 55° CBM	1
	1458698846	ФОРСУНКА DZ1000 750KG 80° M14 1-5 PÜSK. MEMESI DZ1000 750KG 80° M14 1-5	BOQUILLA DZ1000 750KG 80° M14 1-5	DYSZA DZ1000 750KG 80° M14 1-5	1
	1458698891	ФОРСУНКА DZ1000 1000KG 80° M14 1-5 PÜSK. MEMESI DZ1000 1000KG 80° M14 1-5	BOQUILLA DZ1000 1000KG 80° M14 1-5	DYSZA DZ1000 1000KG 80° M14 1-5	1

	6XXXXXXX	RU TR	PT	PL	X
	65311201	ФОРСУНКА DZ1000 950KG 80° M14 1-5 PÜSK. MEMESI DZ1000 950KG 80° M14 1-5	BOQUILLA DZ1000 950KG 80° M14 1-5	DYSZA DZ1000 950KG 80° M14 1-5	1
	65312421	ФОРСУНКА DZ1000 800KG 80° M14 1-5 PÜSK. MEMESI DZ1000 800KG 80° M14 1-5	BOQUILLA DZ1000 800KG 80° M14 1-5	DYSZA DZ1000 800KG 80° M14 1-5	1
	65313182	ФОРСУНКА BER 275KG 55° CBM PÜSK. MEMESI BER 275KG 55° CBM	BOQUILLA BER 275KG 55° CBM	DYSZA BER 275KG 55° CBM	1
	65313183	ФОРСУНКА BER 300KG 55° CBM PÜSK. MEMESI BER 300KG 55° CBM	BOQUILLA BER 300KG 55° CBM	DYSZA BER 300KG 55° CBM	1
	65313184	ФОРСУНКА BER 450KG 55° CBM PÜSK. MEMESI BER 450KG 55° CBM	BOQUILLA BER 450KG 55° CBM	DYSZA BER 450KG 55° CBM	1
	65313185	ФОРСУНКА BER 500KG 55° CBM PÜSK. MEMESI BER 500KG 55° CBM	BOQUILLA BER 500KG 55° CBM	DYSZA BER 500KG 55° CBM	1
	65313186	ФОРСУНКА BER 600KG 55° CBM PÜSK. MEMESI BER 600KG 55° CBM	BOQUILLA BER 600KG 55° CBM	DYSZA BER 600KG 55° CBM	1
	65313190	ФОРСУНКА DZ1000 900KG 80° M14 1-5 PÜSK. MEMESI DZ1000 900KG 80° M14 1-5	BOQUILLA DZ1000 900KG 80° M14 1-5	DYSZA DZ1000 900KG 80° M14 1-5	1
	65313851	ФОРСУНКА BER 550KG 55° CBM PÜSK. MEMESI BER 550KG 55° CBM	BOQUILLA BER 550KG 55° CBM	DYSZA BER 550KG 55° CBM	1
	65313852	ФОРСУНКА DZ1000 550KG 80° M14 1-5 PÜSK. MEMESI DZ1000 550KG 80° M14 1-5	BOQUILLA DZ1000 550KG 80° M14 1-5	DYSZA DZ1000 550KG 80° M14 1-5	1
	65313853	ФОРСУНКА DZ1000 700KG 80° M14 1-5 PÜSK. MEMESI DZ1000 700KG 80° M14 1-5	BOQUILLA DZ1000 700KG 80° M14 1-5	DYSZA DZ1000 700KG 80° M14 1-5	1
	65313854	ФОРСУНКА DZ1000 650KG 80° M14 1-5 PÜSK. MEMESI DZ1000 650KG 80° M14 1-5	BOQUILLA DZ1000 650KG 80° M14 1-5	DYSZA DZ1000 650KG 80° M14 1-5	1
	65313855	ФОРСУНКА DZ1000 850KG 80° M14 1-5 PÜSK. MEMESI DZ1000 850KG 80° M14 1-5	BOQUILLA DZ1000 850KG 80° M14 1-5	DYSZA DZ1000 850KG 80° M14 1-5	1
5002	65312447	БЛОК УПРАВЛЕНИЯ BT340 ОСН.НАСТР-КИ KUTU BT340 TEMEL AYARI	PROGRAMADOR BT340 CONFIGUR. BÁSICA	MODUŁ BT340 USTAWIENIE PODSTAWOWE	1
	65312450	БЛОК УПРА. BT340 ОПРЕДЕЛ. ПАРАМ. KUTU BT340 ÖZEL AYAR	PROGRAMADOR BT340 CONF. ESPECÍFICA	MODUŁ BT340 SPECYFICZNE USTAWIENIE	1
	65312455	БЛОК УПРА. BT340 GL-EF3+БЕС.РЕГ. KUTU BT340 GL-EF3+FREK.DÖNÜS.	PROGRAMADOR BT340 GL-EF3+CTL.FR.	MODUŁ BT340 GL-EF3+PRZET.CZEST.	1
5010	65311362	ИСПЫТАТЕЛЬНАЯ ГОРЕЛКА С КНОПКОЙ PB2 BASMA DÜĞMESİ İLE BRÜLÖR TEST PB2	QUEIMADOR DE ENSAIO COM B. PRESSÃO PB2	PALNIK TEST Z PRZYCISKIEM PB2	1
5020	65311918	МОДУЛЬ VSM100 (LSB-M 667R0200-1) VSM100 MODÜLÜ (LSB-M 667R0200-1)	MÓDULO VSM100 (LSB-M 667R0200-1)	MODUL VSM100 (LSB-M 667R0200-1)	1
5042	65311940	РЕЛЕ FIN 38.61.8.240.5060 KLL 1W FZ RÖLE FIN 38.61.8.240.5060 KLL 1W FZ	RELE FIN 38.61.8.240.5060 KLL 1W FZ	PRZEKAŹNIK FIN 38.61.8.240.5060 KLL 1WFZ	1
5070	65311937	ПРОХОДНАЯ КЛЕММА WAGO (СЕРАЯ) 2010-1301 DEVRE TERMINALI WAGO (GRI) 2010-1301	BORNE DE PASAGEM WAGO (CINZA) 2010-1301	ZACISK PRZELOTOWY WAGO (SZARY) 2010-1301	1
	65311938	ПРОХОДНАЯ КЛЕММА WAGO (СЕРАЯ) 2016-1301 DEVRE TERMINALI WAGO (GRI) 2016-1301	BORNE DE PASAGEM WAGO (CINZA) 2016-1301	ZACISK PRZELOTOWY WAGO (SZARY) 2016-1301	1
5071	65311939	ПРОХОДНАЯ КЛЕММА WAGO (PE) 2016-1307 DEVRE TERMINALI WAGO (PE) 2016-1307	BORNE DE PASAGEM WAGO (PE) 2016-1307	ZACISK PRZELOTOWY WAGO (PE) 2016-1307	1
5080	65311793	ВЫКЛЮЧ. ЭЛЕКТРОДВ. SCH D 3-4kW LC1D09P7 KONTAKTOER MOTOR SCH D 3-4kW LC1D09P7	CONTACTOR MOTOR SCH D 3-4kW LC1D09P7	STYCZNIK SILNIK SCH D 3-4kW LC1D09P7	1
5085	65311794	РАЗЪЕДИНИТ. ЭЛЕКТРОДВИГА. 3-4KW GV2ME14 DEVRE KESİCİ MOTOR 3-4KW GV2ME14	DISJUNTOR MOTOR 3-4KW GV2ME14	WYŁĄCZNIKI SILNIK 3-4KW GV2ME14	1
5086	65311795	ВСПОМОГАТЕЛЬНЫЙ ПЕРЕКЛЮЧАТЕЛЬ GVAE11 YARDIMCI ANAHTARI GVAE11	INTERRUPTOR AUXILIAR GVAE11	PRZEŁĄCZNIK POMOCNICZY GVAE11	1
5087	65311941	ПРИВОДЫ ACH550 15KW SÜRÜCÜLER ACH550 15KW	CONVERSOR FREQ. ACH550 15KW	PRZETWORNICA ACH550 15KW	1
	65311942	ПРИВОДЫ ACH550 22KW SÜRÜCÜLER ACH550 22KW	CONVERSOR FREQ. ACH550 22KW	PRZETWORNICA ACH550 22KW	1
	65312014	ПРЕОБРАЗОВАТЕЛЬ ЧАСТОТЫ ACH550 - 11kW FREKANS DÖNÜŞTÜRÜCÜ ACH550 - 11kW	CONVERSOR DE FREQUÊNCIA ACH550 - 11kW	PRZETWORNICA CZĘSTOTLIWOŚCI ACH550-11kW	1
	65312021	ПРИВОДЫ ACH550 18,5KW SÜRÜCÜLER ACH550 18,5KW	CONVERSOR FREQ. ACH550 18,5KW	PRZETWORNICA ACH550 18,5KW	1
5090	65311943	ВЕНТИЛЯТОР ПРОВЕТ., ПРЕОБРАЗОВА. ЧАСТОТЫ FREKANS INVERTÖRÜ IÇIN FAN	VENTILADOR CONVERSOR DE FREQUÊNCIA	PRZETWORNICA CZĘSTOTLIWOŚCI WENTYLATORA	1
5091	65311944	ФИЛЬТР ВЕНТИЛЯ. 177X177 EFA 200R5/ELDON FILTRE HALAVAN. 177X177 EFA 200R5/ELDON	FILTRO VENTIL. 177X177 EFA 200R5 /ELDON	FILTR WENTYL. 177X177 EFA 200R5/ELDON	1
5100	65312285	РЕГУЛЯТОРА ДЕРЕВО 8.0 (CCW) GR.2 AĞAÇ DÜZENLEMESI 8.0 (CCW) GR.2	VEIO DE REGULAÇÃO 8.0 (CCW) GR.2	DRZEWO REGULACJA 8.0 (CCW) GR.2	1
	65312292	РЕГУЛЯТОРА ДЕРЕВО 7.0 (CCW) GR.2 AĞAÇ DÜZENLEMESI 7.0 (CCW) GR.2	VEIO DE REGULAÇÃO 7.0 (CCW) GR.2	DRZEWO REGULACJA 7.0 (CCW) GR.2	1
	65312293	РЕГУЛЯТОРА ДЕРЕВО 9.0 (CCW) GR.2 AĞAÇ DÜZENLEMESI 9.0 (CCW) GR.2	VEIO DE REGULAÇÃO 9.0 (CCW) GR.2	DRZEWO REGULACJA 9.0 (CCW) GR.2	1
	65312302	РЕГУЛЯТОРА ДЕРЕВО 5.0 (CCW) AĞAÇ DÜZENLEMESI 5.0 (CCW)	VEIO DE REGULAÇÃO 5.0 (CCW)	DRZEWO REGULACJA 5.0 (CCW)	1
	65312303	РЕГУЛЯТОРА ДЕРЕВО 6.0 (CCW) AĞAÇ DÜZENLEMESI 6.0 (CCW)	VEIO DE REGULAÇÃO 6.0 (CCW)	DRZEWO REGULACJA 6.0 (CCW)	1

	6XXXXXXX	RU TR	PT	PL	X
	65312304	РЕГУЛЯТОРА ДЕРЕВО 7.0 (CCW) AĞAÇ DÜZENLEMESI 7.0 (CCW)	VEIO DE REGULAÇÃO 7.0 (CCW)	DRZEWO REGULACJA 7.0 (CCW)	1
	65312305	РЕГУЛЯТОРА ДЕРЕВО 8.0 (CCW) AĞAÇ DÜZENLEMESI 8.0 (CCW)	VEIO DE REGULAÇÃO 8.0 (CCW)	DRZEWO REGULACJA 8.0 (CCW)	1
5110	65311439	КЛЕММНАЯ КОЛОДКА WAGO STRG.N6-9GL-E/F3TB TERMINAL BLOĞU WAGO STRG.N6-9 GL-E/F3 TB	BLOCO TERMINAL WAGO STRG.N6-9 GL-E/F3 TB	LISTWA ZACISKOWA WAGO STRG.N6-9GL-E/F3TB	1
5111	65311440	ПОДДЕРЖКА РАЗЪЕМА 3-6 MM KONEKTÖR DESTEĞI 3-6 MM	SUPORTE DE CONECTOR 3-6 MM	UCHWYT ZŁĄCZA 3-6 MM	1
5112	65311441	ПРОХОДНАЯ КЛЕММА WAGO ОРАНЖЕ. 2001-1202 DEVRE TERMINALI WAGO (TURUNCU)2001-1202	BORNE DE PASAGEM WAGO LARANJA 2001-1202	ZACISK PRZELOTOWY WAGO POMARA 2001-1202	1
5113	65311442	ПОДДЕРЖКА РАЗЪЕМА 6-8 MM KONEKTÖR DESTEĞI 6-8 MM	SUPORTE DE CONECTOR 6-8 MM	UCHWYT ZŁĄCZA 6-8 MM	1
5114	65311443	ПРОХОДНАЯ КЛЕММА WAGO (СЕРАЯ) 2001-1201 DEVRE TERMINALI WAGO (GRI) 2001-1201	BORNE DE PASAGEM WAGO (CINZA) 2001-1201	ZACISK PRZELOTOWY WAGO (SZARY) 2001-1201	1
5115	65311444	ПРОХОДНАЯ КЛЕММА WAGO (PE) 2001-1207 DEVRE TERMINALI WAGO (PE) 2001-1207	BORNE DE PASAGEM WAGO (PE) 2001-1207	ZACISK PRZELOTOWY WAGO (PE) 2001-1207	1
5116	65311445	ПРОХОДНАЯ КЛЕММА WAGO (PE) 2001-1407 DEVRE TERMINALI WAGO (PE) 2001-1407	BORNE DE PASAGEM WAGO (PE) 2001-1407	ZACISK PRZELOTOWY WAGO (PE) 2001-1407	1
5117	65311446	ИНСТРУМЕНТЫ WAG 2009-309 İŞLETIM ARAC WAG 2009-309	FERRAMENTA WAG 2009-309	NARZĘD. D.PRZEŁĄCZANIA WAG 2009-309	1
5118	65311447	ПРОХОДНАЯ КЛЕММА WAGO (N) 2001-1404 DEVRE TERMINALI WAGO (N) 2001-1404	BORNE DE PASAGEM WAGO (NEUTRO) 2001-1404	ZACISK PRZELOTOWY WAGO (N) 2001-1404	1
5119	65311448	ПРОХОДНАЯ КЛЕММА WAGO (N) 2001-1204 DEVRE TERMINALI WAGO (N) 2001-1204	BORNE DE PASAGEM WAGO (NEUTRO) 2001-1204	ZACISK PRZELOTOWY WAGO (N) 2001-1204	1
5120	65311449	ПРОХОДНАЯ КЛЕММА WAGO (СЕРАЯ) 2001-1401 DEVRE TERMINALI WAGO (GRI) 2001-1401	BORNE DE PASAGEM WAGO (CINZA) 2001-1401	ZACISK PRZELOTOWY WAGO (SZARY) 2001-1401	1
5121	65311450	ТЕСТОВАЯ НАГРУЗКА ETAMATIC 663R1199 TEST YÜKÜ ETAMATIC 663R1199	CARGA DE TESTE ETAMATIC 663R1199	OBCIĄŻENIE TESTOWE ETAMATIC 663R1199	1
5122	65311451	САЛБНИК M16 KABLO RAKORU M16	PRENSAESTOPAS M16	DŁAWNICA M16	1
	65311758	САЛБНИК M20 KABLO RAKORU M20	PRENSAESTOPAS M20	DŁAWNICA M20	1
	65311759	САЛБНИК M25 KABLO RAKORU M25	PRENSAESTOPAS M25	DŁAWNICA M25	1
5123	65311786	CLIC TOOL M16 CLIC TOOL M16	CLIC TOOL M16	CLIC TOOL M16	1
	65311787	CLIC TOOL M20 CLIC TOOL M20	CLIC TOOL M20	CLIC TOOL M20	1
	65311788	CLIC TOOL M25 CLIC TOOL M25	CLIC TOOL M25	CLIC TOOL M25	1
5150	1758811789	ИСТОЧНИК ПИТАНИЯ ML30.100-24V DC GÜÇ KAYNAĞI ML30.100-24V DC	FONTE DE ENERGIA ML30.100-24V DC	ZASILACZ ML30.100-24V DC	1
5300	65114033	РЕГУЛИРОВАНИЕ RWF 55.50A9 REGÜLATÖRÜ RWF 55.50A9	REGULADOR RWF 55.50A9	REGULATORA RWF 55.50A9	1

ADDRESSES

www.elco.net

LIST OF THE ABBREVIATIONS

: Maintenance parts / Pièces d'entretien / Materiali di consumo /
: Piezas de mantenimiento / Hilfsmaterial / Onderhoudsonderdelen

: Wearing parts / Pièces d'usure / Parti di usura
: Piezas de desgaste / Verschleissteile / Slijtageonderdelen

* : Item not stocked, manufactured to order / Article non stocké, fabrication à la demande /
: Articolo non a magazzino, produzione all'ordine / Artículo no almacenado, fabricación previa solicitud /
: Keine Lagerware, wird bei Bedarf bestellt, Artikel niet op voorraad, fabricage op bestelling

IDENTIFICATION PLATE

SERIAL NUMBER

7 Characters : 00001 / K A

- Sequencial number
- Trimester of manufacture : from A to D
- Year of manufacture : K → 2003, L → 2004, M → 2005, etc ...

8 Characters : 00001 / L 09

- Sequencial number
- Month of manufacture
- Year of manufacture : K → 2003, L → 2004, M → 2005, etc ...

11 Characters : 2007 1370 P 07

- Year of manufacture
- Month of manufacture
- Year of manufacture : P → 2007, R → 2008, S → 2009, T → 2010, U → 2011, W → 2012, X → 2013, Y → 2014, Z → 2015
- Sequencial number

18 Characters : 070115 000000000001

- Sequencial number
- Manufacturing day (07) / Month (01) / Year (15)

The indications mentionned on the prices, commercial or technical literature and the scheme are written for your guidance and are available at a given time. The CONSTRUCTOR retains the power to modify the presentation, the form, the size, the conception or the material of the products.