SIEMENS

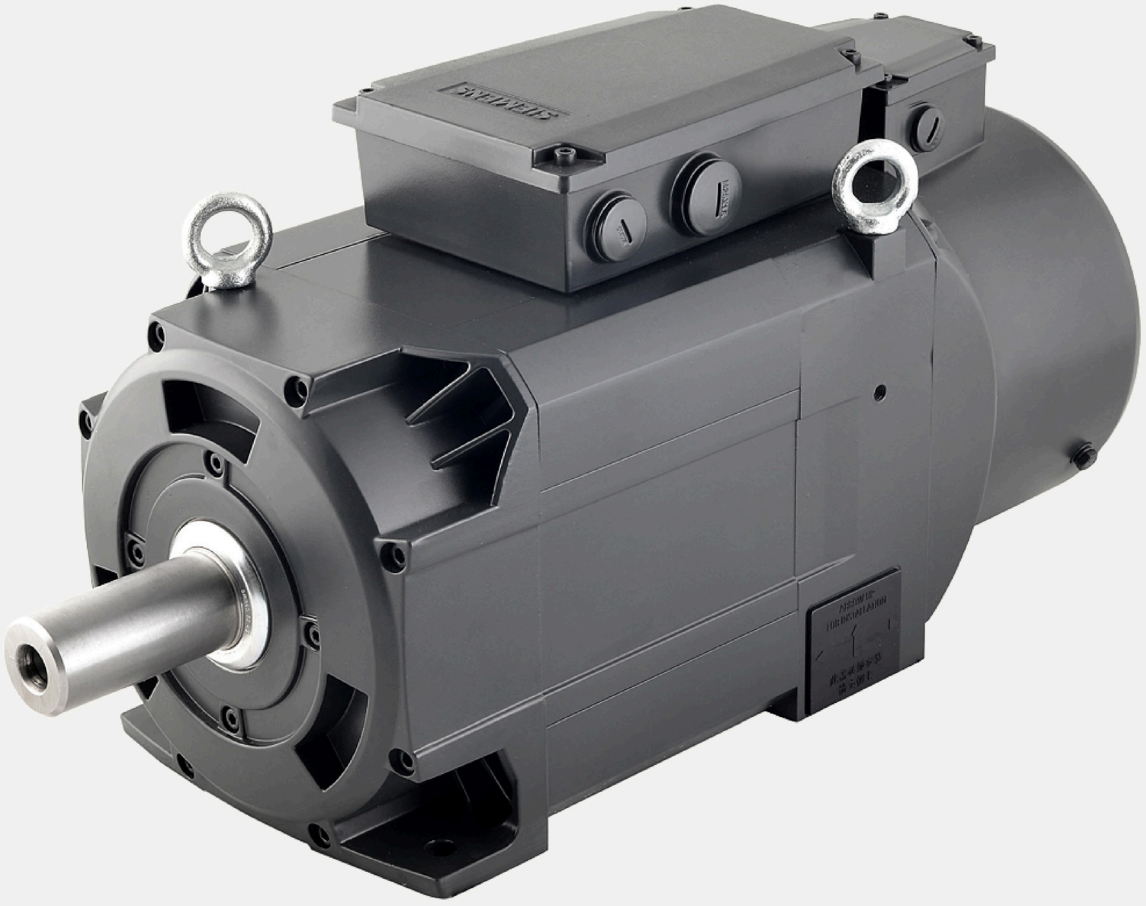

Edition 09/2021

EQUIPMENT MANUAL

SIMOTICS

SIMOTICS M-1PH1 main motors

www.siemens.com

Промэлектроника, sales@prom-elec.com

sales@prom-elec.com / ООО ПРОМЭЛЕКТРОНИКА

SIEMENS

SIMOTICS

SIMOTICS M-1PH1
1PH1 main motors

Equipment Manual

Introduction

Fundamental safety instructions 1

Motor description 2

Mechanical properties 3

Preparation for use 4

Mounting the motor 5

Electrical connection 6

Configuration 7

Commissioning 8

Operation 9

Maintenance 10

Decommissioning and disposal 11

Technical data and characteristics 12

Appendix A

09/2021

A5E51077676A-AA

Legal information

Warning notice system

This manual contains notices you have to observe in order to ensure your personal safety, as well as to prevent damage to property. The notices referring to your personal safety are highlighted in the manual by a safety alert symbol, notices referring only to property damage have no safety alert symbol. These notices shown below are graded according to the degree of danger.

⚠ **DANGER**
indicates that death or severe personal injury **will** result if proper precautions are not taken.

⚠ **WARNING**
indicates that death or severe personal injury **may** result if proper precautions are not taken.

⚠ **CAUTION**
indicates that minor personal injury can result if proper precautions are not taken.

NOTICE
indicates that property damage can result if proper precautions are not taken.

If more than one degree of danger is present, the warning notice representing the highest degree of danger will be used. A notice warning of injury to persons with a safety alert symbol may also include a warning relating to property damage.

Qualified Personnel

The product/system described in this documentation may be operated only by **personnel qualified** for the specific task in accordance with the relevant documentation, in particular its warning notices and safety instructions. Qualified personnel are those who, based on their training and experience, are capable of identifying risks and avoiding potential hazards when working with these products/systems.

Proper use of Siemens products

Note the following:

⚠ **WARNING**
Siemens products may only be used for the applications described in the catalog and in the relevant technical documentation. If products and components from other manufacturers are used, these must be recommended or approved by Siemens. Proper transport, storage, installation, assembly, commissioning, operation and maintenance are required to ensure that the products operate safely and without any problems. The permissible ambient conditions must be complied with. The information in the relevant documentation must be observed.

Trademarks

All names identified by ® are registered trademarks of Siemens AG. The remaining trademarks in this publication may be trademarks whose use by third parties for their own purposes could violate the rights of the owner.

Disclaimer of Liability

We have reviewed the contents of this publication to ensure consistency with the hardware and software described. Since variance cannot be precluded entirely, we cannot guarantee full consistency. However, the information in this publication is reviewed regularly and any necessary corrections are included in subsequent editions.

Siemens AG
Digital Industries
Postfach 48 48
90026 NÜRNBERG
GERMANY

A5E51077676A-AA
Ⓟ 09/2021 Subject to change

Copyright © Siemens AG 2021.
All rights reserved

Introduction

Standard version

This documentation only describes the functionality of the standard version. The machine OEM documents any extensions or changes to the motor made by it.

For reasons of clarity, this documentation cannot contain all of the detailed information on all of the product types. Moreover, this documentation cannot take into consideration every possible type of installation, operation, and maintenance.

This documentation should be kept in a location where it can be easily accessed and made available to the personnel responsible.

Target group

This documentation addresses the following personnel:

- Project planners and project engineers
- Machine manufacturers
- Commissioning engineers
- Electricians and fitters
- Service technicians and warehouse personnel

Benefits

This documentation enables the target group to apply the rules and guidelines to be observed when configuring and operating products and systems.

This documentation supports you to complete the following tasks:

- Selecting motors and accessories
- Calculating the drive components
- Mounting and connecting motors
- Commissioning motors
- Operating and maintaining motors
- Creating a system or plant configuration

More information

You can find the overview of documentation and links to download documents as well as to use documentation online at:

More information (https://support.industry.siemens.com/cs/ww/en/view/108998034)

Please send any questions about the technical documentation (e.g. suggestions for improvement, corrections) to the following e-mail address:

docu.motioncontrol@siemens.com

Internet address for products

Products (http://www.siemens.com/motioncontrol)

Training

The following link provides information on SITRAIN - training from Siemens for products, systems and automation engineering solutions:

SITRAIN (http://siemens.com/sitrain)

mySupport

Extensive assistance and more information can be found under the following link:

My Support Links and Tools
(https://support.industry.siemens.com/My/ww/en/documentation)

You can individually compile your personal library, e.g. for your documentation based on Siemens content, and adapt it for your own machine documentation.

To do so, click "My Documentation".

Note

If you want to use this function, you must register once.

Later, you can log on with your login data.

You can create your own personal library under "mySupport" using the following procedure.

Precondition

You have registered for and logged on to "Siemens Industry Online Support", hereinafter referred to as "SIOS".

SIOS (https://support.industry.siemens.com/cs/ww/en/)

Procedure for creating a personal library

1. Open SIOS and log on.
2. Enter the product you are looking for under "Search for product info" and press "Enter".
3. Select the doc. class you want, e.g. "Manual", under "Entry type".
4. Click on your desired manual under the entries.
5. Click on "Add to mySupport documentation".
6. Enter a title.
7. Press "OK".

❒

The selected manual can be found under "mySupport". To find further functions, click on the icon located to the right of the document.

In this way, you can create your own library and quickly access your documentation.

Technical Support

If you have any technical questions, contact Technical Support (https://support.industry.siemens.com).

To make a support request, proceed as follows:

Precondition

You have registered for and logged on to "Siemens Industry Online Support", abbreviated "SIOS".

SIOS (https://support.industry.siemens.com/cs/ww/en/)

Procedure

1. Click on "Your direct way to the Support Request" or follow the link Support Request (https://support.industry.siemens.com/cs/ww/en/my)
2. Follow the instructions in the online form.

❐

Product maintenance

The components are subject to continuous further development within the scope of product maintenance (improvements to robustness, discontinuations of components, etc).

These further developments are "spare parts-compatible" and do not change the article number.

In the scope of such spare parts-compatible further developments, connector positions are sometimes changed slightly. This does not cause any problems with proper use of the components. Please take this fact into consideration in special installation situations (e.g. allow sufficient clearance for the cable length).

Use of third-party products

This document contains recommendations relating to third-party products. Siemens accepts the fundamental suitability of these third-party products.

You can use equivalent products from other manufacturers.

Siemens does not accept any warranty for the properties of third-party products.

Compliance with the General Data Protection Regulation

Siemens respects the principles of data protection, in particular the data minimization rules (privacy by design).

For this product, this means:
The product does not process neither store any person-related data, only technical function data (e.g. time stamps). If the user links these data with other data (e.g. shift plans) or if he stores person-related data on the same data medium (e.g. hard disk), thus personalizing these data, he has to ensure compliance with the applicable data protection stipulations.

Table of contents

Introduction **3**

1 Fundamental safety instructions **11**

1.1 General safety instructions 11

1.2 Equipment damage due to electric fields or electrostatic discharge 15

1.3 Security information 16

1.4 Residual risks of power drive systems 17

2 Motor description **19**

2.1 Highlights and benefits 19

2.2 Use for the intended purpose 20

2.3 Scope of delivery 21

2.3.1 Motor package 21

2.3.2 Motor rating plate 21

2.3.3 Cables and connectors 23

2.3.4 Device combination 25

2.4 Derating factors 26

3 Mechanical properties **27**

3.1 Directives and standards 27

3.2 Cooling 28

3.3 Degree of protection 30

3.4 Construction types 31

3.5 Motor dimensions 32

3.6 Bearing 36

3.6.1 Bearing types and bearing versions 36

3.6.2 Bearing lifetime 36

3.7 Shaft extension 37

3.8 Radial and axial forces 37

3.8.1 Radial force 37

3.8.2 Axial force 39

3.8.3 Radial and axial force diagrams 40

3.9 Radial eccentricity, concentricity and axial eccentricity 42

3.10 Balancing 43

3.11 Vibration response 44

3.11.1 Mounting and mounting instructions 44

3.11.2 Natural frequency for mounting 44

3.11.3 Misalignment 45

3.11.4 Vibration stressing 46

3.12 Vibration severity 48

3.13 Noise emission 48

4 Preparation for use ... 49

4.1 Shipment and packaging ... 49

4.2 Transportation and storage ... 49
4.2.1 Transporting ... 50
4.2.2 Storing ... 52

5 Mounting the motor ... 55

5.1 Overview ... 55

5.2 Mounting orientation and outline dimensions ... 56
5.2.1 Mounting orientation ... 56
5.2.2 Outline dimensions ... 56

5.3 Mounting the motor ... 57

5.4 Attaching the output elements ... 59

5.5 Installation as a direct drive for spindles ... 60

5.6 Notes on laying cables in drag chains ... 67

6 Electrical connection ... 69

6.1 Permissible line system configurations ... 69

6.2 Circuit diagram of the motor ... 69

6.3 Connecting the external fan ... 69

6.4 System integration ... 71
6.4.1 SINAMICS drive I/O ... 71
6.4.2 Connecting-up information ... 74
6.4.3 Routing cables ... 75
6.4.4 Terminal boxes ... 77
6.4.4.1 Motor terminal box ... 77
6.4.4.2 Fan terminal box ... 78
6.4.5 Connecting the terminal boxes ... 78
6.4.6 Encoder system ... 81
6.4.6.1 Overview ... 81
6.4.6.2 Encoder connection ... 81

7 Configuration ... 83

7.1 SINAMICS configuring procedure ... 83

7.2 Specifying the duty cycle ... 85

7.3 Selecting motors ... 87

8 Commissioning ... 89

8.1 Safety instructions for commissioning ... 89

8.2 Checklists for commissioning ... 90

8.3 Checking the insulation resistance ... 93

8.4 Switching on and switching off ... 94

9 Operation ... 95

9.1 Faults ... 96

9.2 Non-operational periods ... 98

10 Maintenance ... 99

10.1 General inspection guidelines ... 99

10.2 Maintenance and inspection intervals ... 100

10.3 Initial inspection ... 101

10.4 General inspection ... 101

10.5 Spare parts - External fans ... 102

10.6 Cleaning the motor and the external fan ... 104

11 Decommissioning and disposal ... 107

11.1 Decommissioning ... 107

11.2 Disposal ... 108

12 Technical data and characteristics ... 109

12.1 SIMOTICS M-1PH1 main motors ... 109
12.1.1 General technical data ... 109
12.1.2 Specific technical data ... 110
12.1.2.1 Shaft height 100 ... 110
12.1.2.2 Shaft height 132 ... 110
12.1.2.3 Characteristics ... 111

12.2 Cables for the SINAMICS V70 spindle servo system ... 121

12.3 Address of CE-authorized manufacturer ... 121

A Appendix ... 123

A.1 Description of terms ... 123

A.2 Environmental compatibility ... 125

A.3 Assembling the power cable ... 126

Index ... 129

Fundamental safety instructions 1

1.1 General safety instructions

⚠ WARNING

Electric shock and danger to life due to other energy sources

Touching live components can result in death or severe injury.

- Only work on electrical devices when you are qualified for this job.
- Always observe the country-specific safety rules.

Generally, the following steps apply when establishing safety:

1. Prepare for disconnection. Notify all those who will be affected by the procedure.
2. Isolate the drive system from the power supply and take measures to prevent it being switched back on again.
3. Wait until the discharge time specified on the warning labels has elapsed.
4. Check that there is no voltage between any of the power connections, and between any of the power connections and the protective conductor connection.
5. Check whether the existing auxiliary supply circuits are de-energized.
6. Ensure that the motors cannot move.
7. Identify all other dangerous energy sources, e.g. compressed air, hydraulic systems, or water. Switch the energy sources to a safe state.
8. Check that the correct drive system is completely locked.

After you have completed the work, restore the operational readiness in the inverse sequence.

⚠ WARNING

Electric shock due to connection to an unsuitable power supply

When equipment is connected to an unsuitable power supply, exposed components may carry a hazardous voltage. Contact with hazardous voltage can result in severe injury or death.

- Only use power supplies that provide SELV (Safety Extra Low Voltage) or PELV-(Protective Extra Low Voltage) output voltages for all connections and terminals of the electronics modules.

WARNING

Electric shock due to damaged motors or devices

Improper handling of motors or devices can damage them.

Hazardous voltages can be present at the enclosure or at exposed components on damaged motors or devices.

- Ensure compliance with the limit values specified in the technical data during transport, storage and operation.
- Do not use any damaged motors or devices.

WARNING

Electric shock due to unconnected cable shield

Hazardous touch voltages can occur through capacitive cross-coupling due to unconnected cable shields.

- As a minimum, connect cable shields and the conductors of power cables that are not used (e.g. brake cores) at one end at the grounded housing potential.

WARNING

Electric shock if there is no ground connection

For missing or incorrectly implemented protective conductor connection for devices with protection class I, high voltages can be present at open, exposed parts, which when touched, can result in death or severe injury.

- Ground the device in compliance with the applicable regulations.

WARNING

Arcing when a plug connection is opened during operation

Opening a plug connection when a system is operation can result in arcing that may cause serious injury or death.

- Only open plug connections when the equipment is in a voltage-free state, unless it has been explicitly stated that they can be opened in operation.

NOTICE

Property damage due to loose power connections

Insufficient tightening torques or vibration can result in loose power connections. This can result in damage due to fire, device defects or malfunctions.

- Tighten all power connections to the prescribed torque.
- Check all power connections at regular intervals, particularly after equipment has been transported.

NOTICE

Damage to equipment due to unsuitable tightening tools.

Unsuitable tightening tools or fastening methods can damage the screws of the equipment.

- Be sure to only use screwdrivers which exactly match the heads of the screws.
- Tighten the screws with the torque specified in the technical documentation.
- Use a torque wrench or a mechanical precision nut runner with a dynamic torque sensor and speed limitation system.

WARNING

Unexpected movement of machines caused by radio devices or mobile phones

Using radio devices or mobile telephones in the immediate vicinity of the components can result in equipment malfunction. Malfunctions may impair the functional safety of machines and can therefore put people in danger or lead to property damage.

- Therefore, if you move closer than 20 cm to the components, be sure to switch off radio devices or mobile telephones.
- Use the "SIEMENS Industry Online Support app" only on equipment that has already been switched off.

WARNING

Unrecognized dangers due to missing or illegible warning labels

Dangers might not be recognized if warning labels are missing or illegible. Unrecognized dangers may cause accidents resulting in serious injury or death.

- Check that the warning labels are complete based on the documentation.
- Attach any missing warning labels to the components, where necessary in the national language.
- Replace illegible warning labels.

WARNING

Unexpected movement of machines caused by inactive safety functions

Inactive or non-adapted safety functions can trigger unexpected machine movements that may result in serious injury or death.

- Observe the information in the appropriate product documentation before commissioning.
- Carry out a safety inspection for functions relevant to safety on the entire system, including all safety-related components.
- Ensure that the safety functions used in your drives and automation tasks are adjusted and activated through appropriate parameterizing.
- Perform a function test.
- Only put your plant into live operation once you have guaranteed that the functions relevant to safety are running correctly.

Note

Important safety notices for Safety Integrated functions

If you want to use Safety Integrated functions, you must observe the safety notices in the Safety Integrated manuals.

WARNING

Active implant malfunctions due to electromagnetic fields

Electromagnetic fields (EMF) are generated by the operation of electrical power equipment, such as transformers, converters, or motors. People with pacemakers or implants are at particular risk in the immediate vicinity of this equipment.

- If this affects you, maintain the minimum distance to such equipment that is specified in the "Intended use" chapter.

WARNING

Active implant malfunctions due to permanent-magnet fields

Even when switched off, electric motors with permanent magnets represent a potential risk for persons with heart pacemakers or implants if they are close to converters/motors.

- If this affects you, maintain the minimum distance to such equipment that is specified in the "Intended use" chapter.
- When transporting or storing permanent-magnet motors always use the original packing materials with the warning labels attached.
- Clearly mark the storage locations with the appropriate warning labels.
- IATA regulations must be observed when transported by air.

WARNING

Injury caused by moving or ejected parts

Contact with moving motor parts or drive output elements and the ejection of loose motor parts (e.g. feather keys) out of the motor enclosure can result in severe injury or death.

- Remove any loose parts or secure them so that they cannot be flung out.
- Do not touch any moving parts.
- Safeguard all moving parts using the appropriate safety guards.

WARNING

Fire due to inadequate cooling

Inadequate cooling can cause the motor to overheat, resulting in death or severe injury as a result of smoke and fire. This can also result in increased failures and reduced service lives of motors.

- Comply with the specified cooling requirements for the motor.

WARNING

Fire due to incorrect operation of the motor

When incorrectly operated and in the case of a fault, the motor can overheat resulting in fire and smoke. This can result in severe injury or death. Further, excessively high temperatures destroy motor components and result in increased failures as well as shorter service lives of motors.

- Operate the motor according to the relevant specifications.
- Only operate the motors in conjunction with effective temperature monitoring.
- Immediately switch off the motor if excessively high temperatures occur.

CAUTION

Burn injuries caused by hot surfaces

In operation, the motor can reach high temperatures, which can cause burns if touched.

- Mount the motor so that it is not accessible in operation.

Measures when maintenance is required:

- Allow the motor to cool down before starting any work.
- Use the appropriate personnel protection equipment, e.g. gloves.

1.2 Equipment damage due to electric fields or electrostatic discharge

Electrostatic sensitive devices (ESD) are individual components, integrated circuits, modules or devices that may be damaged by either electric fields or electrostatic discharge.

NOTICE

Equipment damage due to electric fields or electrostatic discharge

Electric fields or electrostatic discharge can cause malfunctions through damaged individual components, integrated circuits, modules or devices.

- Only pack, store, transport and send electronic components, modules or devices in their original packaging or in other suitable materials, e.g conductive foam rubber of aluminum foil.
- Only touch components, modules and devices when you are grounded by one of the following methods:
  - Wearing an ESD wrist strap
  - Wearing ESD shoes or ESD grounding straps in ESD areas with conductive flooring
- Only place electronic components, modules or devices on conductive surfaces (table with ESD surface, conductive ESD foam, ESD packaging, ESD transport container).

1.3 Security information

Siemens provides products and solutions with industrial security functions that support the secure operation of plants, systems, machines and networks.

In order to protect plants, systems, machines and networks against cyber threats, it is necessary to implement – and continuously maintain – a holistic, state-of-the-art industrial security concept. Siemens' products and solutions constitute one element of such a concept.

Customers are responsible for preventing unauthorized access to their plants, systems, machines and networks. Such systems, machines and components should only be connected to an enterprise network or the internet if and to the extent such a connection is necessary and only when appropriate security measures (e.g. firewalls and/or network segmentation) are in place.

For additional information on industrial security measures that may be implemented, please visit
https://www.siemens.com/industrialsecurity (https://www.siemens.com/industrialsecurity).

Siemens' products and solutions undergo continuous development to make them more secure. Siemens strongly recommends that product updates are applied as soon as they are available and that the latest product versions are used. Use of product versions that are no longer supported, and failure to apply the latest updates may increase customer's exposure to cyber threats.

To stay informed about product updates, subscribe to the Siemens Industrial Security RSS Feed under
https://www.siemens.com/industrialsecurity
(https://new.siemens.com/global/en/products/services/cert.html#Subscriptions).

Further information is provided on the Internet:

Industrial Security Configuration Manual
(https://support.industry.siemens.com/cs/ww/en/view/108862708)

⚠ WARNING

Unsafe operating states resulting from software manipulation

Software manipulations, e.g. viruses, Trojans, or worms, can cause unsafe operating states in your system that may lead to death, serious injury, and property damage.

- Keep the software up to date.
- Incorporate the automation and drive components into a holistic, state-of-the-art industrial security concept for the installation or machine.
- Make sure that you include all installed products into the holistic industrial security concept.
- Protect files stored on exchangeable storage media from malicious software by with suitable protection measures, e.g. virus scanners.
- On completion of commissioning, check all security-related settings.

1.4 Residual risks of power drive systems

When assessing the machine- or system-related risk in accordance with the respective local regulations (e.g., EC Machinery Directive), the machine manufacturer or system installer must take into account the following residual risks emanating from the control and drive components of a drive system:

1. Unintentional movements of driven machine or system components during commissioning, operation, maintenance, and repairs caused by, for example,
   - Hardware and/or software errors in the sensors, control system, actuators, and cables and connections
   - Response times of the control system and of the drive
   - Operation and/or environmental conditions outside the specification
   - Condensation/conductive contamination
   - Parameterization, programming, cabling, and installation errors
   - Use of wireless devices/mobile phones in the immediate vicinity of electronic components
   - External influences/damage
   - X-ray, ionizing radiation and cosmic radiation
2. Unusually high temperatures, including open flames, as well as emissions of light, noise, particles, gases, etc., can occur inside and outside the components under fault conditions caused by, for example:
   - Component failure
   - Software errors
   - Operation and/or environmental conditions outside the specification
   - External influences/damage
3. Hazardous shock voltages caused by, for example:
   - Component failure
   - Influence during electrostatic charging
   - Induction of voltages in moving motors
   - Operation and/or environmental conditions outside the specification
   - Condensation/conductive contamination
   - External influences/damage
4. Electrical, magnetic and electromagnetic fields generated in operation that can pose a risk to people with a pacemaker, implants or metal replacement joints, etc., if they are too close
5. Release of environmental pollutants or emissions as a result of improper operation of the system and/or failure to dispose of components safely and correctly
6. Influence of network-connected communication systems, e.g. ripple-control transmitters or data communication via the network

For more information about the residual risks of the drive system components, see the relevant sections in the technical user documentation.

Motor description 2

2.1 Highlights and benefits

Overview

The SIMOTICS M-1PH1 main motors, referred to as 1PH1 motors in the following, are used for the machine tool business with the SINUMERIK 808D ADVANCED control system coupled with the high performance SINAMICS V70 spindle drives or the SIMATIC control system coupled with the SINAMICS G120 converters.

The motors are provided with the following mechanical properties:

- Asynchronous variant
- Forced ventilation
- Shaft heights 100 mm and 132 mm

Thanks to the flexible interplay between the converter and the motor, it is now even easier to implement the following applications:

- Extreme duty cycle
- Short rise time
- High precision with respect to the speed, torque and positioning

Highlights and benefits

- Wide power spectrum with low envelope dimensions
- Wide speed control ranges
- Outstanding performance characteristics
  - Maximum speeds up to 10000 r/min
  - Excellent vibration magnitudes
  - High dynamic response (short ramp-up time)
- Low noise emission
- Simple and flexible connection system

2.2 Use for the intended purpose

WARNING

Danger to life and material damage when incorrectly used

If you do not use the motors or their components correctly, there is a risk of death, severe injury and/or material damage.

- Only use the motors for industrial or commercial plants and systems.
- If, in an exceptional case, you do not use the motors in industrial or commercial plants and systems, ensure that increased requirements are complied with (e.g. regarding touch protection).
- Do not use the motors in hazardous areas (where there is a risk of explosion), if the motors have not been expressly released and authorized for these types of applications. Carefully observe any special supplementary notes that may be attached.
- Only use the motors and their components for the applications specified by Siemens.
- Protect the motors against dirt and contact with aggressive substances.
- Ensure that the site conditions comply with the rating plate data and the conditions specified in this documentation. When necessary, take into account deviations regarding approvals or country-specific regulations.
- If you have any questions regarding the intended use, please contact your local Siemens office.
- If you wish to use special versions and design variants whose specifications vary from the motors described in this document, then first contact your local Siemens office.

WARNING

Danger to life for wearers of active implants due to magnetic and electrical fields

Electric motors pose a danger to people with active medical implants, e.g. cardiac stimulators, who come close to the motors.

- If you are affected, stay at a minimum distance of 500 mm from the motors (tripping threshold for static magnetic fields of 0.5 mT according to the Directive 2013/35/EU).

The motors are designed for use in covered areas, such as production areas.

For more information, see Section "General technical data (Page 109)".

The 1PH1 motors are used as industrial motors for machine tools, and be designed for turning and milling machines.

Thanks to integrated technology, the 1PH1 motors can be used in a very wide variety of applications:

- Compact machine tools
- Complex machining centers and turning machines
- Milling machines with full enclosure
- High-load milling spindles
- Counterspindles or power tools for turning machines
- Main drives in presses and extruders, converting applications
- Rotary axes in the paper and printing industry
- For use in crane systems (power house)
- Flying shears, coilers and winder drives
- Customized machines

2.3 Scope of delivery

2.3.1 Motor package

Component	Illustration	Shaft height (mm)	Rated power (kW)	Rated speed (r/min)	Article number [1]
SIMOTICS M-1PH1 main motors	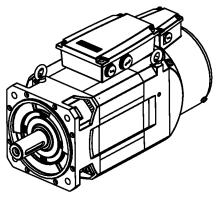	100	3.7	1000	1PH1103-1□D1□-□GA0
			3.7	1500	1PH1101-1□F1□-□GA0
			5.5	1000	1PH1105-1□D1□-□GA0
			5.5	1500	1PH1103-1□F1□-□GA0
			7.5	1500	1PH1105-1□F1□-□GA0
		132	7.5	1000	1PH1131-1□D1□-□GA0
			11	1000	1PH1133-1□D1□-□GA0
			11	1500	1PH1131-1□F1□-□GA0
			15	1500	1PH1133-1□F1□-□GA0

[1] For more information about the article numbers, see the motor article number explanation described in this section.

2.3.2 Motor rating plate

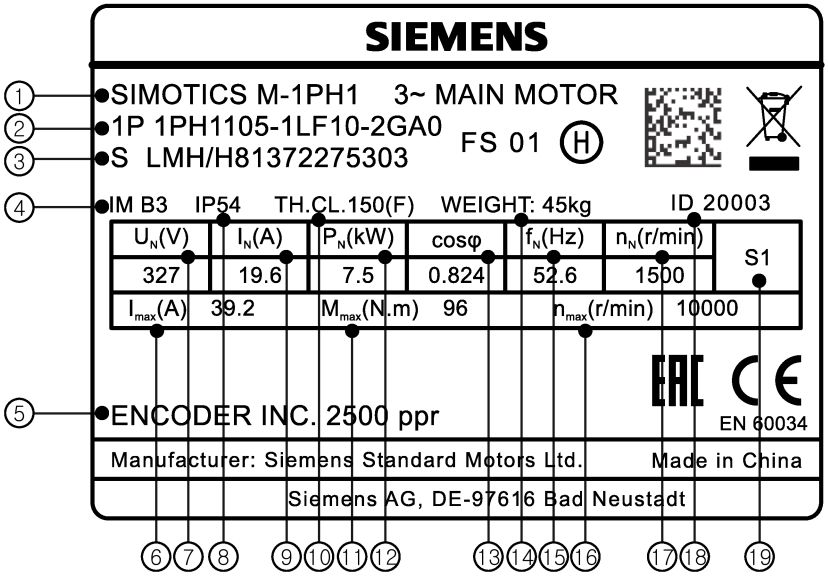

① Motor type
② Article number
③ Serial number
④ Mounting orientation
⑤ Encoder type
⑥ Maximum current
⑦ Rated voltage
⑧ Degree of protection
⑨ Rated current
⑩ Thermal class
⑪ Maximum torque
⑫ Rated power
⑬ Motor power factor
⑭ Weight
⑮ Rated frequency
⑯ Maximum speed
⑰ Rated speed
⑱ Motor ID
⑲ Motor operating mode

Article number explanation (example)

1 P H 1 1 0 5 - 1 L F 1 2 - 0 G A 0

Shaft height (SH)

10	100 mm
13	132 mm

Rated power and speed

1	3.7 kW, 1500 r/min	for SH100
3	3.7 kW, 1000 r/min	
	5.5 kW, 1500 r/min	
5	5.5 kW, 1000 r/min	
	7.5 kW, 1500 r/min	
1	7.5 kW, 1000 r/min	for SH132
	11 kW, 1500 r/min	
3	11 kW, 1000 r/min	
	15 kW, 1500 r/min	

Motor type

1	Asynchronous motor

Encoder type

L	Incremental encoder, TTL 2500 ppr
H	Absolute encoder, single-turn 20-bit

Construction type

0	IM B3/IM V5, foot mounting
2	IM B5/IM V1, flange mounting

Cooling

1	Forced cooling (non-drive end to drive end)

Rated speed

D	1000 r/min
F	1500 r/min

Shaft extension

0	Plain shaft
1	Fitted key, full-key balancing
2	Fitted key, half-key balancing

Bearing

G	Standard Bearing

2.3.3 Cables and connectors

Cables

SINAMICS V70 spindle drive to 1PH1 motor			
Component	Illustration	Article number	Length (m)
MOTION-CONNECT 500 power cable (4 × 2.5 mm², raw cable), for 1PH1 3.7 kW motor	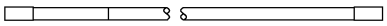	6FX5008-1BB21-1DA0	30
MOTION-CONNECT 500 power cable (4 × 4 mm², raw cable), for 1PH1 5.5 kW to 7.5 kW motor		6FX5008-1BB31-1DA0	
MOTION-CONNECT 500 power cable (4 × 10 mm², raw cable), for 1PH1 11 kW motor		6FX5008-1BB51-1DA0	
MOTION-CONNECT 500 power cable (4 × 16 mm², raw cable), for 1PH1 15 kW motor		6FX5008-1BB61-1DA0	
MOTION-CONNECT 300 incremental encoder cable	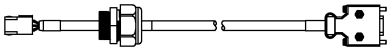	6FX3002-2CT30-1AD0	3
		6FX3002-2CT30-1AF0	5
		6FX3002-2CT30-1AH0	7
		6FX3002-2CT30-1BA0	10
		6FX3002-2CT30-1BF0	15
		6FX3002-2CT30-1CA0	20
MOTION-CONNECT 300 absolute encoder cable		6FX3002-2DB30-1AD0	3
		6FX3002-2DB30-1AF0	5
		6FX3002-2DB30-1AH0	7
		6FX3002-2DB30-1BA0	10
		6FX3002-2DB30-1BF0	15
		6FX3002-2DB30-1CA0	20

Note

- The MOTION-CONNECT 300 cables, MOTION-CONNECT 500 cables, and spindle setpoint cables given above are suitable for use in drag chains. For more information on how to lay cables properly in drag chains, see Section "Notes on laying cables in drag chains (Page 67)".
- No additional MOTION-CONNECT 300 power cables are available for 1PH1 motors. The 30 m MOTION-CONNECT 500 power cables (raw cables) listed above could be selected for using with 1PH1 motors. You must assemble the power cable with connectors by yourself. For more information about how to assemble the power cable, see Section "Assembling the power cable (Page 126)".

Recommended connectors for 1PH1 motor power cables

Power cable	**Motor side**					**Drive side**				
Cross-section	Supplier	Article number	Picture	Quantity (pieces)	Used for	Sup-plier	Article number	Picture	Quantity (pieces)	Used for
4 × 2.5 mm²	KST	RNYL 2-5		3	U/V/W	KST	SNYL2-4		3	U/V/W
	KST	RNYL 2-6		1	PE	KST	RNYL 2-5		1	PE
	-	-	-	-	-	IDEAL	6204		1	Cable shielding
4 × 4 mm²	KST	RNYL 5-5		3	U/V/W	KST	SNYL5-5		3	U/V/W
	KST	RNY 5-6		1	PE	KST	RNY 5-5		1	PE
	-	-	-	-	-	IDEAL	6204		1	Cable shielding
4 × 10 mm²	KST	TLK 10-5		3	U/V/W	KST	TLK 10-5		4	U/V/W/PE
	KST	TLK 10-6		1	PE	-	-	-	-	-
	-	-	-	-	-	IDEAL	62P08		1	Cable shielding
4 × 16 mm²	KST	TLK 16-5		3	U/V/W	KST	TLK 16-5		4	U/V/W/PE
	KST	TLK 16-6		1	PE	-	-	-	-	-
	-	-	-	-	-	IDEAL	62P08		1	Cable shielding

2.3.4 Device combination

The table below lists the 1PH1 motors and configurable V70 spindle drives. You can select the desired spindle drive according to the motor:

SIMOTICS M-1PH1 motors							Power cable (cross-section, mm²) [1]	SINAMICS V70 spindle drive		
Rated power (kW)	Rated current (A)	Rated speed (r/min)	Shaft height (mm)	Article number			Cross section (mm²)	Article number	Frame size	Rated current (A)
3.7	10.3	1500	100	1PH1101-1	☐	F1☐-☐GA0	4 × 2.5	6SL3210-5DE21-1UA0	FSB	10.5
3.7	12.9	1000		1PH1103-1	☐	D1☐-☐GA0		6SL3210-5DE21-3UA0	FSC	12.9
5.5	16.9	1500		1PH1103-1	☐	F1☐-☐GA0	4 × 4	6SL3210-5DE22-0UA0		19.6
5.5	18.8	1000		1PH1105-1	☐	D1☐-☐GA0				
7.5	19.6	1500		1PH1105-1	☐	F1☐-☐GA0				
7.5	26.6	1000	132	1PH1131-1	☐	D1☐-☐GA0		6SL3210-5DE23-0UA0	FSD	29.8
11	28.8	1500		1PH1131-1	☐	F1☐-☐GA0	4 × 10			
11	28.3	1000		1PH1133-1	☐	D1☐-☐GA0				
15	36.7	1500		1PH1133-1	☐	F1☐-☐GA0	4 × 16	6SL3210-5DE24-0UA0		37.6

[1] For more information about the ordering data of the power cables between the spindle drive and the main motor, see Section "Cables and connectors (Page 23)".

2.4 Derating factors

Power deratings at different installation altitudes and surrounding air temperatures

Operation: T = -15 °C to +40 °C (without restriction)

Under conditions other than those specified above (surrounding air temperature > 40 °C or installation altitude > 1000 m above sea level), the permissible torque/power must be determined from the following table. Surrounding air temperatures and installation altitudes are rounded off to 5 °C or 500 m respectively.

Operation: T = -15 °C to +40 °C (without derating)
Under conditions other than those specified above (ambient temperature > 40° C or installation altitude > 1000 m above sea level), the permissible torque/power reduction must be determined from the following table. Ambient temperatures and installation altitudes are rounded off to 5 °C and 500 m respectively.

Installation altitude above sea level	**Factors for reducing the torque/power according to EN 60034-6**		
	40 °C	**45 °C**	**50 °C**
1000	1.00	0.96	0.92
1500	0.97	0.93	0.89
2000	0.94	0.90	0.86
2500	0.90	0.86	0.83
3000	0.86	0.82	0.79
3500	0.82	0.79	0.75
4000	0.77	0.74	0.71

NOTICE

Damage to the motors

For surrounding air temperatures > 55 °C, please contact your local Siemens office.

The standard motors are not suitable for use in corrosive atmospheres, atmospheres with a high salt content, or in outdoor applications; otherwise, the motors may be damaged.

Mechanical properties

3

3.1 Directives and standards

Standards that are complied with

The 1PH1 motors comply with the following standards:

- IEC/EN 60034-1: Rotating electrical machines – Dimensioning and operating behavior
- IEC/EN 60204-1: Safety of machinery – Electrical equipment of machines; general requirements
- UL1004-1: Rotating electrical machines – General requirements

Where applicable, the 1PH1 motors are in conformance with the following parts of IEC/EN 60034:

Feature	Standard
Degree of protection	IEC/EN 60034-5
Cooling	IEC/EN 60034-6
Type of construction	IEC/EN 60034-7
Connection designation	IEC/EN 60034-8
Noise level	IEC/EN 60034-9
Temperature monitoring	IEC/EN 60034-11
Vibration severity level	IEC/EN 60034-14

Relevant directives

The following directives are relevant for the 1PH1 motors.

European Low-Voltage Directive

The 1PH1 motors comply with the Low-Voltage Directive 2014/35/EU.

European Machinery Directive

The 1PH1 motors do not fall within the area of validity covered by the Machinery Directive.

However, the use of the products in a typical machine application has been fully assessed for compliance with the main regulations in this directive concerning health and safety.

European EMC Directive

The 1PH1 motors do not fall within the area of validity covered by the EMC Directive. The products are not considered as devices in the sense of the directive.

European RoHS Directive

The SIMOTICS motor series complies with the Directive 2011/65/EU regarding limiting the use of certain hazardous substances.

WEEE Directive

The SIMOTICS motor series fulfills the EU Directive 2012/19/EU regarding the take-back and recovery of waste electrical equipment.

Eurasian conformity

The 1PH1 motors comply with the requirements of the customs union Russia/Belarus/Kazakhstan (EAC).

Quality systems

Siemens AG employs a quality management system that meets the requirements of ISO 9001 and ISO 14001.

Certificates for the 1PH1 motors can be downloaded from the Internet at the following link:

Certificates for the 1PH1 motors (https://support.industry.siemens.com/cs/products?search=1PH1&dtp=Certificate&mfn=ps&o=DefaultRankingDesc&pnid=13347&lc=en-WW)

China RoHS

SIMOTICS motors comply with the China RoHS.

You can find additional information at:

China RoHS (https://support.industry.siemens.com/cs/ww/de/view/109738656/en)

3.2 Cooling

The 1PH1 motors of both SH100 and SH132 are available with only one cooling method, that is, forced ventilation.

When mounting a motor with forced ventilation, make sure that the following requirements are met:

- The motor is well ventilated, especially for encapsulated installation.
- The warm exhaust air is not drawn in again.
- There is no accumulated dirt in the cooling ducts so that the cooling air can flow in and out without restriction.

NOTICE

Thermal damage to temperature-sensitive parts

The motors can have surface temperatures of over +100 °C. Temperature-sensitive parts in contact with the motor or attached to the motor can be damaged. Temperature-sensitive parts include, for example, cables and electronic components.

- Never attach temperature-sensitive parts to the motor.
- Ensure that no temperature-sensitive parts are in contact with the motor.

Ambient/coolant temperature

Operation: T = -15 °C to +40 °C (without derating)
Under conditions other than those specified above (ambient temperature > 40 °C or installation altitude > 1000 m above sea level), the permissible torque/power reduction must be determined from the following table. Ambient temperatures and installation altitudes are rounded off to 5 °C and 500 m respectively.

Installation altitude above sea level	Factors for reducing the torque/power according to EN 60034-6		
	40 °C	45 °C	50 °C
1000	1.00	0.96	0.92
1500	0.97	0.93	0.89
2000	0.94	0.90	0.86
2500	0.90	0.86	0.83
3000	0.86	0.82	0.79
3500	0.82	0.79	0.75
4000	0.77	0.74	0.71

Note
Higher ambient temperatures

For ambient temperatures > 50 °C, contact your local Siemens office.

The 1PH1 motors are not suitable for use in corrosive atmospheres or atmospheres with a high salt content, or in outdoor applications.

Minimum clearance between a fan and parts/components mounted by the customer

The minimum clearance between a fan and parts/components mounted by the customer or the air discharge opening, and the minimum clearance S between the air intake/air discharge opening and adjacent components must be maintained.

Shaft height (mm)	Fan mounting	Minimum clearance S (mm)	
100	Non-drive end axial, can be rotated through 180°	30	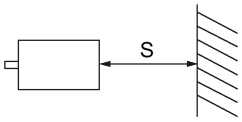
132	Non-drive end radial, can be ordered differently from the mounting type	60	

Ventilation data

Shaft height (mm)	Air flow direction	Degree of protection	Air discharge
100	NDE → DE	IP54	Axial
132			

Cleaning the cooling air ducts

On motors with forced ventilation, you must regularly clean the cooling air ducts through which the ambient air flows. The degree of pollution depends on the location of use. Clean the air cooling ducts, for example, with dry and oil-free compressed air.

3.3 Degree of protection

Designation of the degree of protection

The degree of protection in accordance with EN 60034-6 (IEC 60034-6) is described with letters "IP" and two digits (for example, IP54).

IP = International Protection
1st code number = protection against ingress of foreign bodies
2nd code number = protection against harmful ingress of water

When motors are assigned to a specific degree of protection, a standardized, brief test procedure is applied. This can deviate significantly from the actual ambient conditions where the motor is installed.

Make sure that you provide suitable sealing of the motor shaft for the selected degree of protection for the motor.

Note

Suitability of the motor depending on the ambient conditions

Depending on the ambient conditions, such as the chemical properties of dusts or cooling media used at the installation site, you can only conditionally evaluate the suitability of the motor for the particular environment (for example, electrically conductive dusts) using the degree of protection.

In these cases, be sure to protect the motor additionally using the appropriate measures.

Note

Liquid and/or oil jet

Liquid and/or oil jet must be prevented from collecting on the motor shaft.

Degree of protection

The only one protection degree for the 1PH1 motors is described in detail in the following table:

Degree of protection	1st code number		2nd code number
	Touch protection	Protection against ingress of solid foreign bodies	
IP54	Full protection against contact	Protection against damaging dust deposits	Protection against splash water from any direction

3.4 Construction types

Mounting orientation

The SIMOTICS M-1PH1 main motor supports flange mounting and foot mounting as shown below:

Mounting method	Standard type of construction	Rotated type of construction
Foot mounting	IM B3	IM V5
Flange mounting	IM B5	IM V1

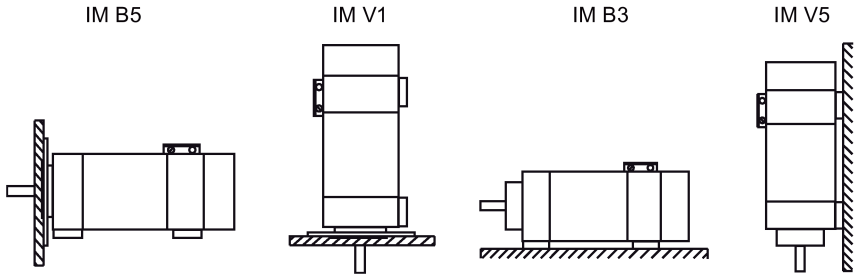

3.5 Motor dimensions

Motor dimensions

Shaft height 100 mm: flange mounting (unit: mm)

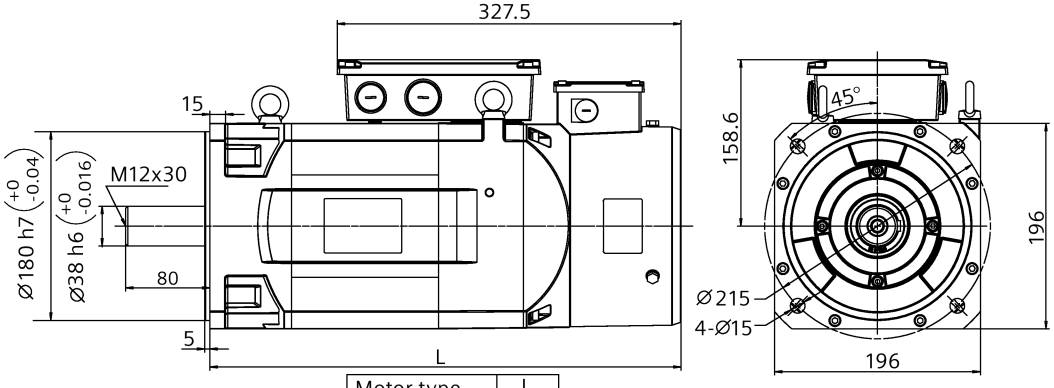

Motor type	L
1PH1101-...	419
1PH1103-...	449
1PH1105-...	499

Motor types with key

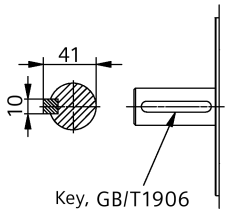

Shaft height 100 mm: foot mounting (unit: mm)

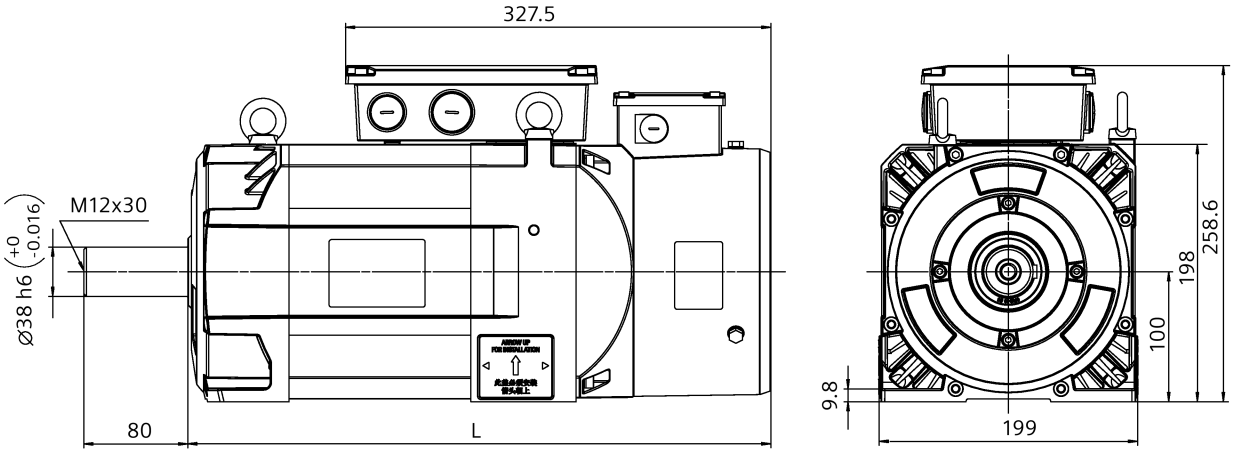

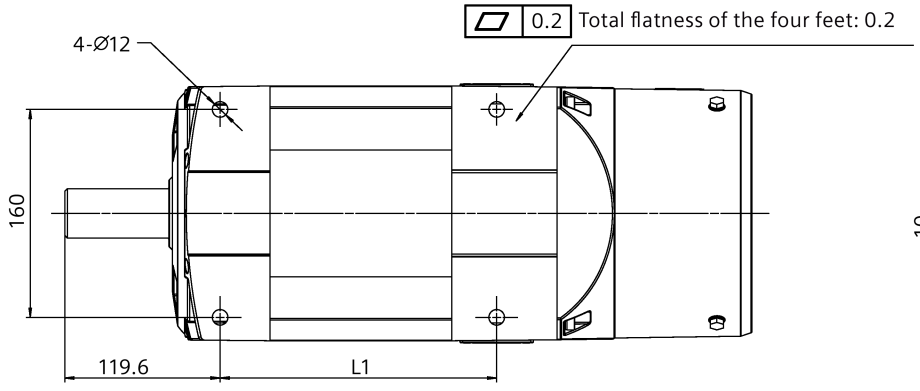

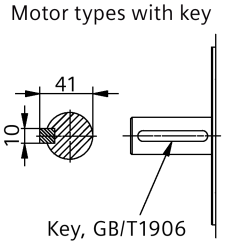

Motor type	L	L1
1PH1101-...	419	183
1PH1103-...	449	213
1PH1105-...	499	263

Shaft height 132 mm: flange mounting (unit: mm)

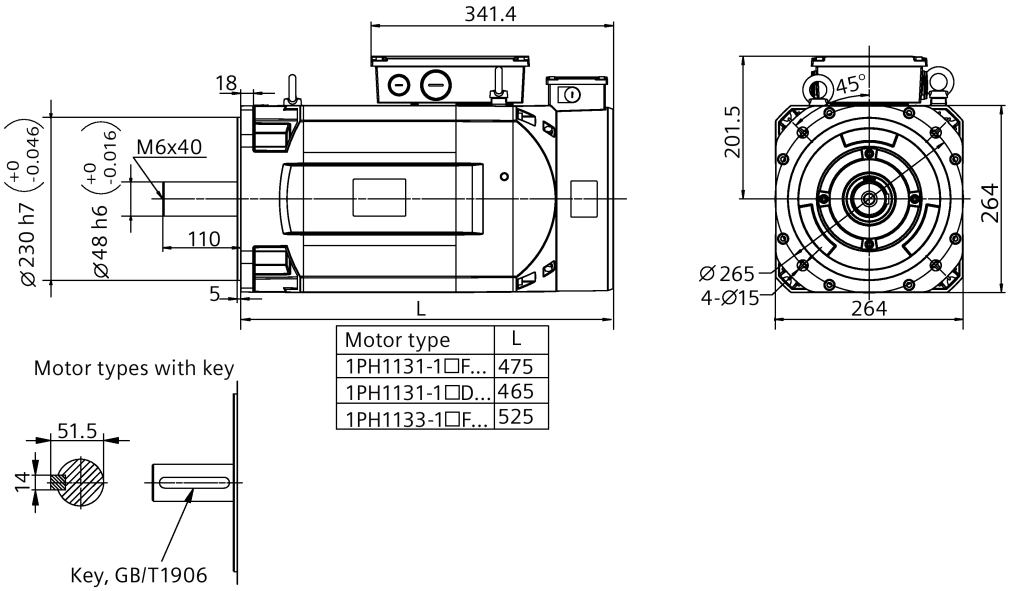

Motor type	L
1PH1131-1□F...	475
1PH1131-1□D...	465
1PH1133-1□F...	525

Shaft height 132 mm: foot mounting (unit: mm)

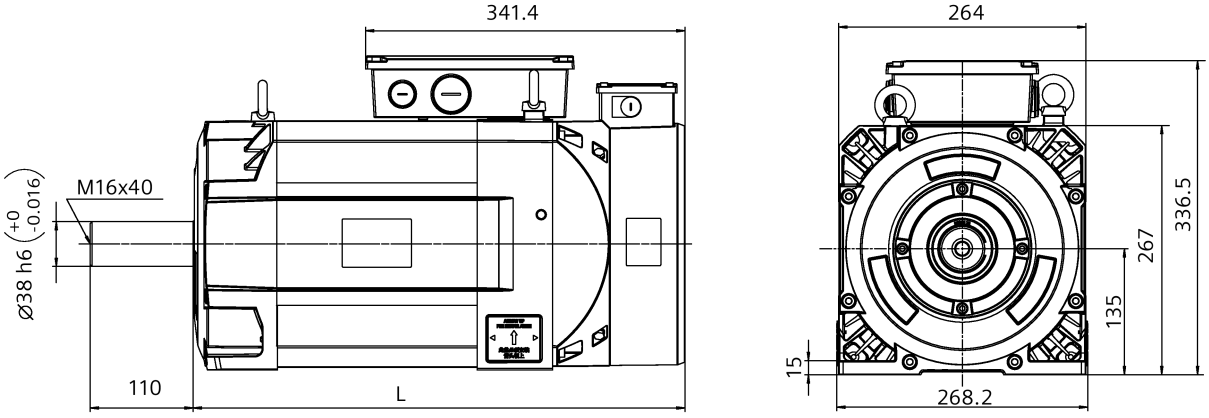

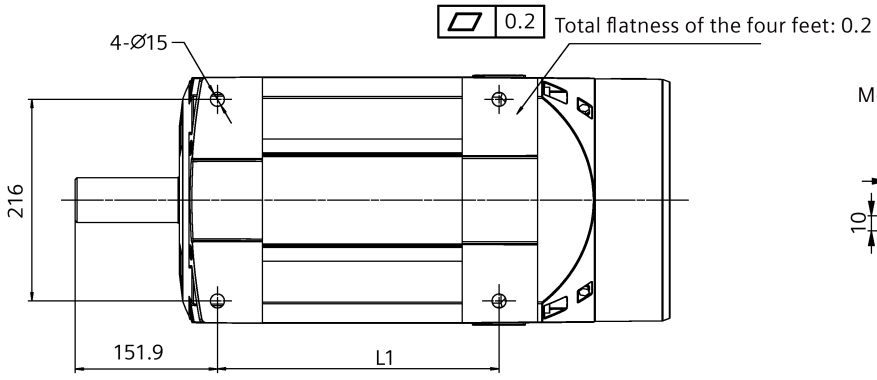

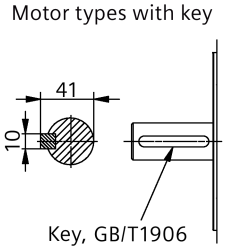

Motor type	L	L1
1PH1131-1□F...	475	251.8
1PH1131-1□D...	465	241.8
1PH1133-1□F...	525	301.8

3.6 Bearing

3.6.1 Bearing types and bearing versions

The 1PH1 motors support only the deep-groove ball bearing, which is suitable for the following applications:

- Coupling output
- Planetary gearboxes, low radial forces

See the following table for the bearing lifetime based on the bearing versions at the average operating speed:

Shaft height	Bearing version	Maximum speed (r/min)	Average operating speed (r/min)	Bearing lifetime (h)
100	Standard	10000	≤ 8000	> 20000 *)
		6000	≤ 4800	
132	Standard	8000	≤ 6400	> 20000 *)
		6000	≤ 4800	

*) This lifetime is estimated when a motor keeps running at a speed equal to or lower than the average operating speed. Even if the lifetime is not reached, the bearing must be replaced when unusual noises, vibration, or faults are found.

Note

Difficult operating conditions in operation at the maximum speed

Under the following difficult operating conditions, the bearing replacement intervals are reduced by up to 50%:

- Large vibrations and shocks
- Frequent reversing operations

3.6.2 Bearing lifetime

The bearing lifetime is limited by the material fatigue (fatigue service life) and/or lubrication failure (grease service life). The fatigue lifetime (statistical bearing lifetime) mainly depends on the mechanical load. For more information on the correlation, see Section "Radial and axial force diagrams (Page 40)". The values are determined according to ISO 281.

The grease lifetime is mainly dependent on the bearing size, speed, temperature as well as vibration load.

The grease lifetime can be extended especially by favorable operating conditions, for example, low or average speed, low bearing temperature, and low radial force or vibration load.

The grease lifetime can be reduced for difficult operating conditions and when motors are mounted vertically.

Lifetime lubrication

Note

For 1PH1 motors, only lifetime lubrication but no relubrication is required during the bearing lifetime. In this case, the grease lifetime is harmonized with the bearing lifetime.

3.7 Shaft extension

The DE shaft extension is cylindrical in accordance with IEC 60072-1.

3.8 Radial and axial forces

3.8.1 Radial force

Make sure that specific radial forces are not exceeded in order to guarantee perfect operation.

For any one of shaft heights 100 and 132, a radial force lower than the minimum radial force is not allowed. This minimum force is indicated in the radial force diagrams that show the radial force F_R as follows:

- At various operating speeds
- As a function of the bearing lifetime

The force diagrams apply to standard shaft extensions at the DE. For smaller shaft diameters, only reduced radial forces or none at all may be transmitted.

For force levels going beyond the upper and lower limits, contact your local Siemens office.

NOTICE
Premature damage to bearings and shaft breakage due to strong radial forces Bearings can be prematurely damaged and shafts may break if force transmission elements apply too much load to the shaft extension as a result of radial forces. • When using mechanical transmission elements, make sure that the maximum limit values specified in the radial force diagrams are not exceeded.

NOTICE
Destruction of bearing seats The motor bearings are designed for operation with radial forces. Rotating forces from the process or imbalance > Q 2.5 can destroy the bearing seats. The rotating forces and imbalance can also occur on coupling drives. • Avoid rotating forces and imbalance.

NOTICE

Mechanical destruction of the motor

If the motor supports higher forces when force/torque boosting elements are used, the flange or feet of the motor can be torn off.

- Make sure that the force/torque boosting elements, for example, gearboxes or brakes, absorb the higher forces. The remedy examples are as follows:
  - Choose the correct type of construction.
  - Mechanically mount the force/torque boosting elements properly.

Note

Complying with the belt manufacturer's guidelines

- When dimensioning the radial forces at the shaft extension, make sure that you comply with the regulations of the belt manufacturers.
- Set the belt tension by means of appropriate measuring instruments.

Calculating the total radial force F_R for belt couplings

If the belt manufacturer has not provided precise radial force data, the radial force can be determined approximately via the following formula:

$F_R = c \times F_U$ $\qquad$ $F_U = 2 \times 10^7 \times P / (n \times D)$

Formula abbreviations	Unit	Description
c	--	Pre-tensioning factor The pre-tensioning factor is an experience value provided by the belt manufacturer. It can be assumed as follows: • For V belts: c = 1.5 to 2.5 • For special plastic belts (flat belts), depending on the load type and belt type: c = 2.0 to 2.5
F_U	N	Circumferential force
P	kW	Motor output
n	r/min	Motor speed
D	mm	Diameter of the belt pulley

3.8.2 Axial force

The axial force acting on the locating bearings comprises the following components:

- Axial force in operation

  Axial forces acting externally on the motor, for example, gearboxes with helical gearing and machining forces through the tool
- Force due to the pre-loading force of the bearings
- Where applicable, force exerted by the rotor weight when the motor is vertically mounted

This results in a maximum axial force that is a function of the direction.

When, for example, helical toothed wheels are used as the drive element, an axial force is exerted on the motor bearings in addition to the radial force. For axial forces in the direction of the motor, the pre-loading of the bearings can be overcome so that the rotor moves in accordance with the axial clearance (up to 0.2 mm). This reduces the service lives of the bearing and encoder and thus must be prevented.

The permissible axial force F_{AZ} in operation depends on the motor mounting position and can be calculated as shown in the table below:

Horizontal arrangement	**Shaft extension facing downwards**
SH100 and SH132 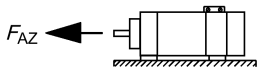 $F_{AZ} = F_A - F_C$ 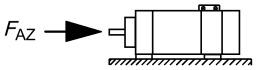 $F_{AZ} = F_C$	SH100 and SH132 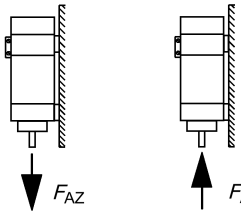 $F_{AZ} = F_A - F_L - F_C$ $F_{AZ} = F_L + F_C$
F_{AZ}	Permissible axial force in operation
F_A	Permissible axial force as a function of the average operating speed nm in each case, ignoring the pre-loading force and the force due to the rotor weight
F_C	Pre-loading force
F_L	Force due to the rotor weight

Deep-groove ball bearings can absorb both radial and axial forces.

The maximum axial force F_A as a function of the radial force is shown in the subsequent force diagrams.

The permissible axial force in the force diagrams is specified without consideration of the force due to the pre-loading of the bearings, rotor weight for vertical mounting, and force direction.

Note

Determining the permissible axial force

The permissible axial force at the shaft extension is dependent on the application (mounting and force direction) and must be calculated.

3.8.3 Radial and axial force diagrams

Permissible radial forces

Shaft height 100

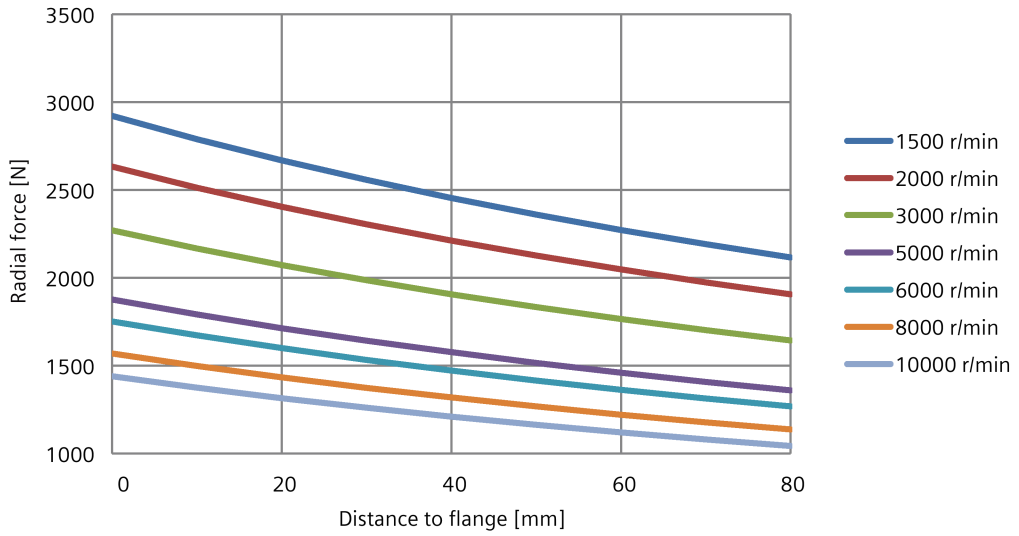

Shaft height 132

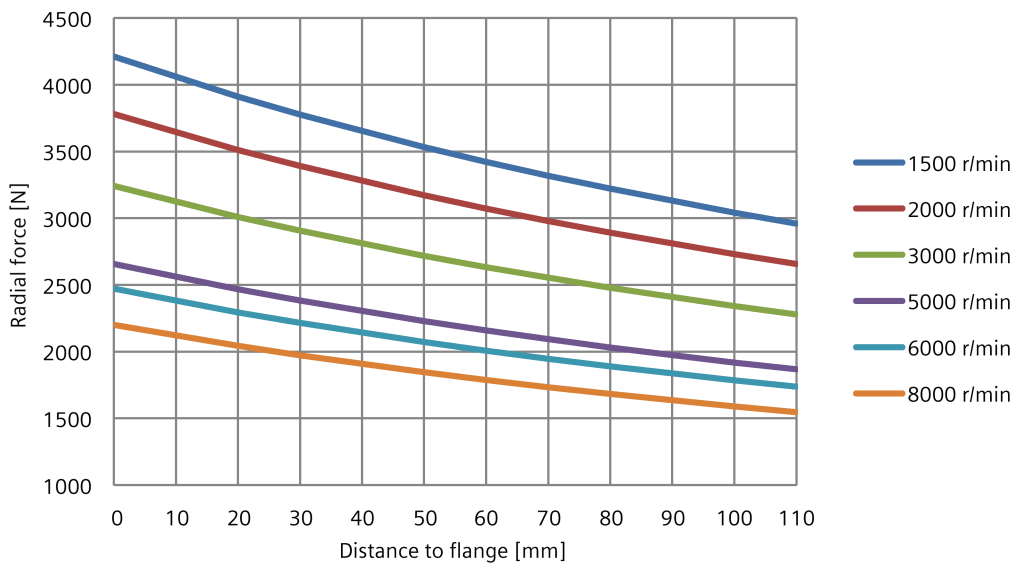

Permissible axial forces

Shaft height 100

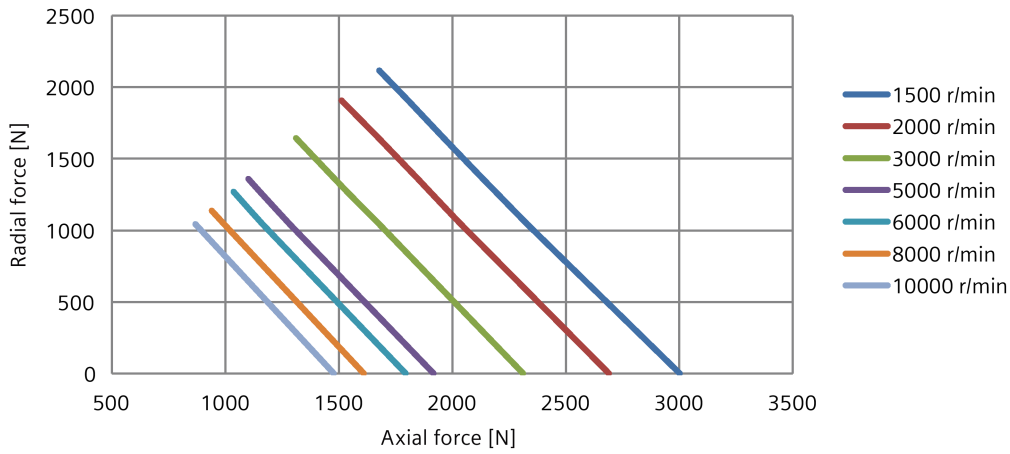

Shaft height 132, performance bearing version, 12000 h bearing lifetime

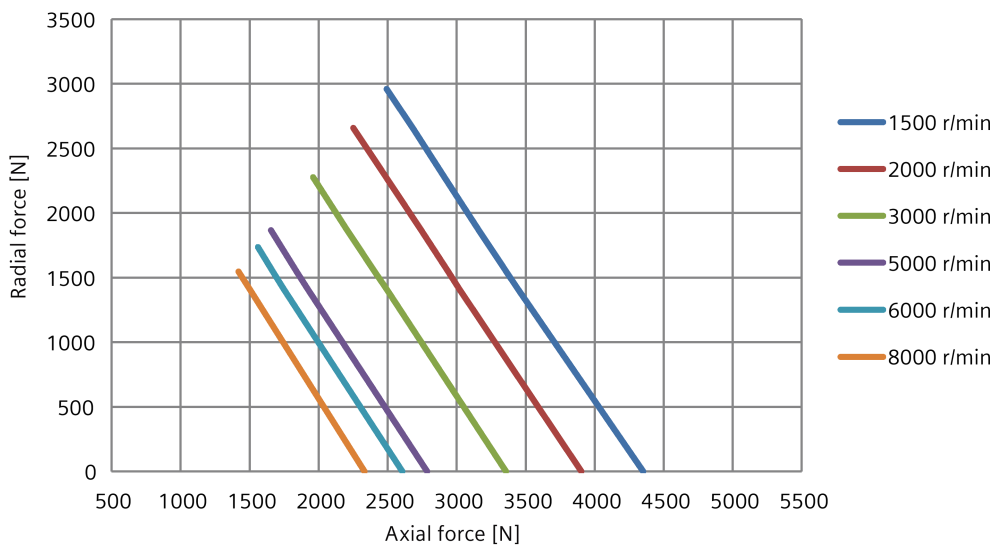

3.9 Radial eccentricity, concentricity and axial eccentricity

The shaft and flange accuracies are always obtained in accordance with IEC 60072 and DIN 42955-1981 and defined as follows:

- Radial eccentricity tolerance: tolerance of the motor shaft (cylindrical shaft extension) in relation to the frame axis
- Concentricity and axial eccentricity tolerance: tolerance of the motor shaft in relation to the flange surface (centering diameter of the mounting flange)

The table below provides the detailed tolerance values for the 1PH1 motors:

Shaft height (mm)	Mounting method	Radial eccentricity tolerance level R	Concentricity and axial eccentricity tolerance level R
100	Foot mounting	0.025	---
132			
100	Flange mounting	0.025	0.05
132			

Checking the radial eccentricity

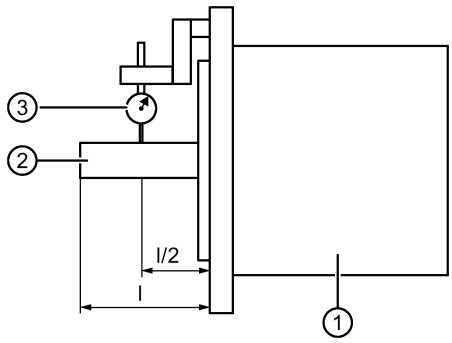

① Motor
② Motor shaft
③ Dial gauge

Checking the concentricity and axial eccentricity

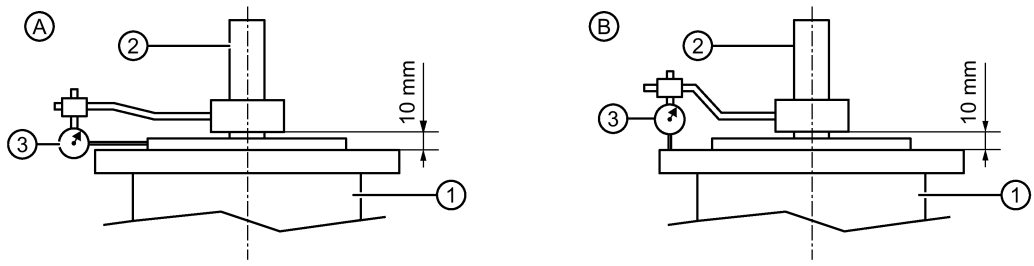

A Check for concentricity
B Check for axial eccentricity

① Motor
② Motor shaft
③ Dial gauge

3.10 Balancing

Requirements on the process of balancing mounted components - especially belt pulleys

In addition to the balance quality of the motor, the vibration quality of the motor with mounted belt pulleys and coupling is essentially determined by the balance quality of the mounted components.

If the motor and the mounted components are separately balanced before they are assembled, the process for balancing the belt pulleys or coupling must be adapted to the motor balancing type.

The 1PH1 motors support the following balancing types:

- Shaft with key: full-key balancing (an "F" is stamped on the shaft face)
- Shaft with key: half-key balancing (an "H" is stamped on the shaft face)
- Plain shaft: without keyway

The balancing type is coded in the article number.

Note

Machining the feather key

In the case of a full-key or a half-key balanced shaft extension or a short output component, remove the part of the feather key which protrudes out of the output component and beyond the shaft contour. This is urgently recommended in the case of speeds above 1000 r/min and high requirements on the balance quality. To meet the highest requirements on the system dynamic balance quality, you are recommended to use motors with a plain shaft (without keyway).

See the table below for requirements on the balancing process as a function of the motor balancing type:

Balancing equipment/process step	Motor with full-key/half-key balancing	Motor with a plain shaft
Auxiliary shaft to balance the mounted components	• Auxiliary shaft with keyway • Keyway with the dimensions same as at the motor shaft extension • Auxiliary shaft full-key or half-key balanced	• Auxiliary shaft without keyway • If required, using a tapered auxiliary shaft
	• Balance quality of the auxiliary shaft ≤ 10 % of the required balance quality of the components to be mounted on the motor	
Attaching the mounted components to the auxiliary shaft for balancing	• Mounted components attached via a key • Design, dimensions, and materials of the key same as at the motor shaft extension	• Attaching the mounted components as far as possible without any clearance, for example, using a light press fit on the tapered auxiliary shaft
Positioning the mounted components on the auxiliary shaft	• Mounted components attached in a position on the auxiliary shaft same as on the actual motor	• No special requirements
Balancing the mounted components	• Two-plane balancing recommended, that is balancing carried out in two planes at both sides of the mounted components at right angles to the axis of rotation	

Special requirements

If special requirements are placed on the smooth-running operation of the machine, it's recommended that the motor together with the output components is completely balanced. In this case, balancing should be carried out in two planes of the output components.

3.11 Vibration response

3.11.1 Mounting and mounting instructions

To ensure smooth, vibration-free motor operation, you must mount the motor correctly and precisely by observing the mounting instructions carefully. For more information, see Section "Mounting the motor (Page 57)".

3.11.2 Natural frequency for mounting

The motor is a system that can vibrate at its natural frequency. This natural frequency lies above the specified maximum speed.

When the motor is mounted onto a machine, a new system, which is subject to vibration, is created with modified natural frequencies. These frequencies can lie within the motor speed range.

This can result in undesirable vibration in the mechanical drive transmission.

Note

Avoiding natural frequencies during mounting

The motor must be carefully mounted on adequately stiff foundations or bedplates. Additional elasticities of the foundations or bedplates can result in resonance effects at the natural frequency and operating speed and therefore result in inadmissibly high vibration values.

The magnitude of the natural frequency occurring when the motor is mounted depends on the following factors:

- Mechanical transmission elements (gearboxes, belts, couplings, pinions, and so on)
- Stiffness of the machine onto which the motor is mounted
- Stiffness of the motor in the area around the foot or customer flange
- Motor weight
- Machine weight and the weight of the mechanical system in the vicinity of the motor
- Damping properties of the motor and driven machine
- Construction type, that is, IM B5, IM B3, IM V5, and IM V1
- Motor weight distribution, that is, length and shaft height

3.11.3 Misalignment

To avoid or minimize misalignment, you are recommended to use a compensating coupling, as shown in the following figure:

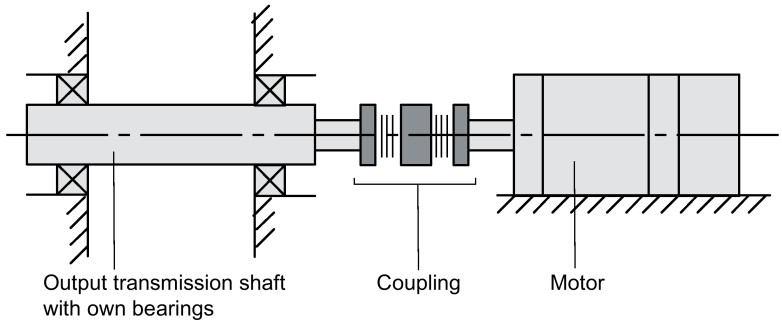

You are recommended not to couple the motor directly or rigidly to an output transmission shaft that has its own bearings.

However, if a rigid coupling is absolutely necessary for mechanical design reasons, misalignment deviations must be avoided. In this case, be sure to check the deviations carefully by means of the appropriate measurements.

Vertical and horizontal alignment

To compensate for any radial offset at the coupling and to horizontally adjust the motor with respect to the driven load, perform the following operations:

- Place shims under the motor feet to position the motor vertically and to prevent the stress in the machine. Keep the number of shims as small as possible by using a few thicker shims instead of several thinner ones.
- For horizontal positioning, push the motor sideways on the foundation while remaining the axial position unchanged.
- When positioning the motor, ensure that the axial gaps around the coupling are uniform. In this case, the alignment accuracies of the driven load and coupling must be taken into consideration.

Alignment accuracy

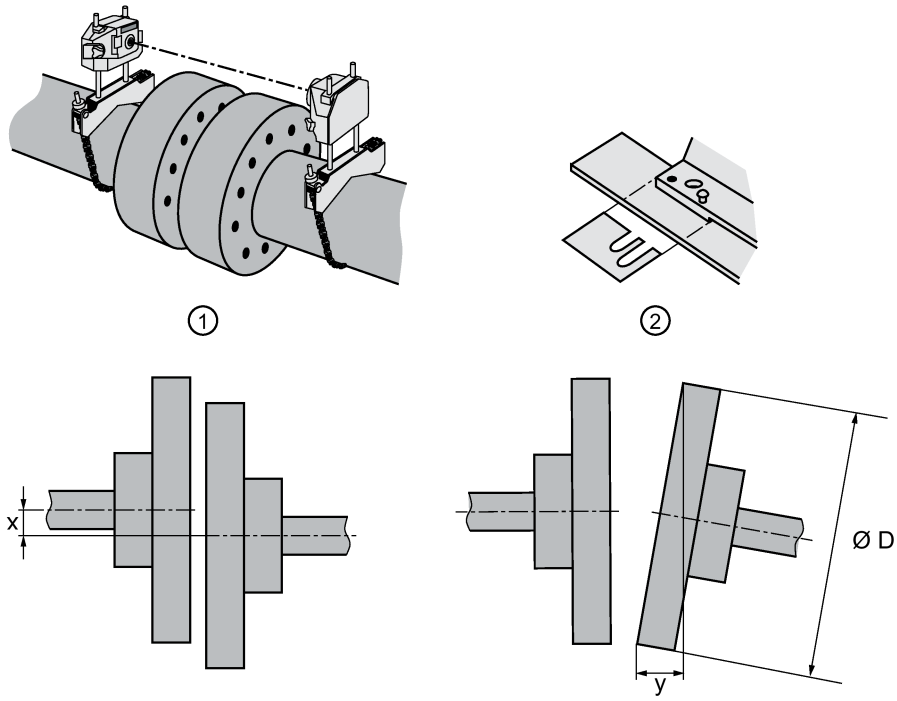

Proceed through the following steps to align the motor:

1. Align the motor with coupling outputs in such a manner that the center lines of the shafts are parallel with no offset. This ensures that no additional force affects the bearings of the shafts during operation.
2. Perform fine adjustments with shims under all the motor feet.

The table below provides permissible deviations during motor aligning:

Permissible deviations	Radial shaft offset x	Axial shaft offset y
Flexible coupling	0.05 mm	0.05 mm

3.11.4 Vibration stressing

The on-site system vibration behavior depends on factors, such as the output components, mounting situation, alignment, installation, and external vibration, which can increase the vibration values of the motor.

Under certain circumstances, the rotor may have to be balanced together with the output components.

To ensure normal operation and a long service life, you must not exceed the vibration values according to ISO 10816 at the defined measuring points on the motor.

See the following table for maximum permissible radial vibration values [1]:

Vibration frequency	Vibration values
< 6.3 Hz	Vibration amplitude s ≤ 0.16 mm
6.3 Hz to 250 Hz	Vibration velocity v_{rms} ≤ 4.5 mm/s
> 250 Hz	Vibration acceleration a_{peak} radial ≤ 10 m/s²

See the following table for maximum permissible axial vibration values [1]:

Vibration velocity	Vibration acceleration
v_{rms} = 4.5 mm/s	a_{peak} axial = 2.25 m/s²

[1] Values in both columns must be considered simultaneously.

The following figure provides the maximum permissible radial vibration velocity including the vibration amplitude and vibration acceleration:

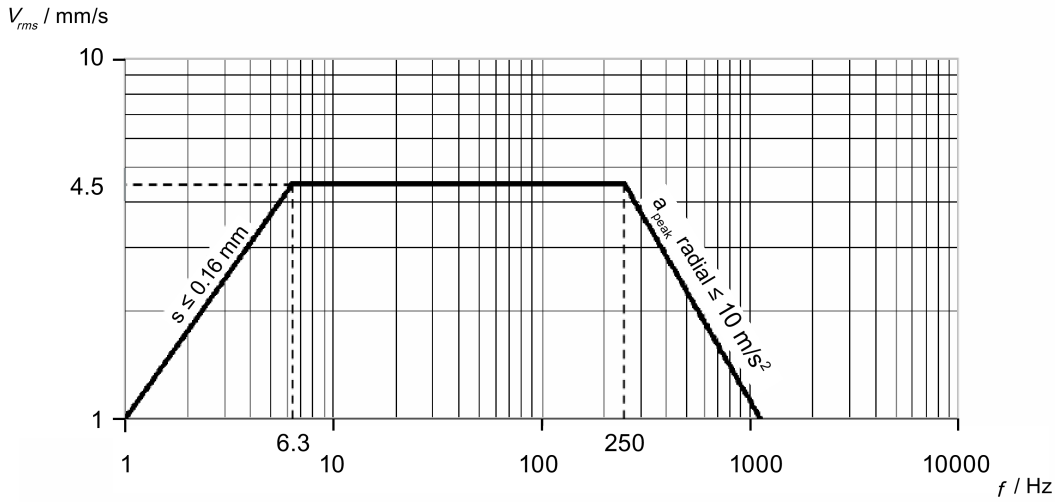

The measuring equipment for measuring the vibration velocity must fulfill the requirements of ISO 2954. The vibration acceleration must be measured as a peak value within the time period based on a frequency band of 10 Hz to 2000 Hz.

If appreciable vibration excitation at a frequency of over 2000 Hz, for example, gear teeth meshing frequency, can be expected, the measurement range must be adapted accordingly. This does not alter the maximum permissible vibration values.

Note

Avoiding continuous operations at natural frequencies

Uninterrupted duty at natural frequencies of the installed/mounted system should be avoided, as this generally leads to the permissible vibration values being exceeded and the system being damaged. To reduce vibration, you are recommended to support flanged-mounted motors at the NDE.

Note

Measuring vibration values according to the relevant directives

Vibration must be analyzed and measured, for example, measuring points, according to ISO 10816-3.

3.12 Vibration severity

The 1PH1 motors are provided with the following vibration qualities in accordance with Siemens/EN 60034-14 (IEC 60034-14):

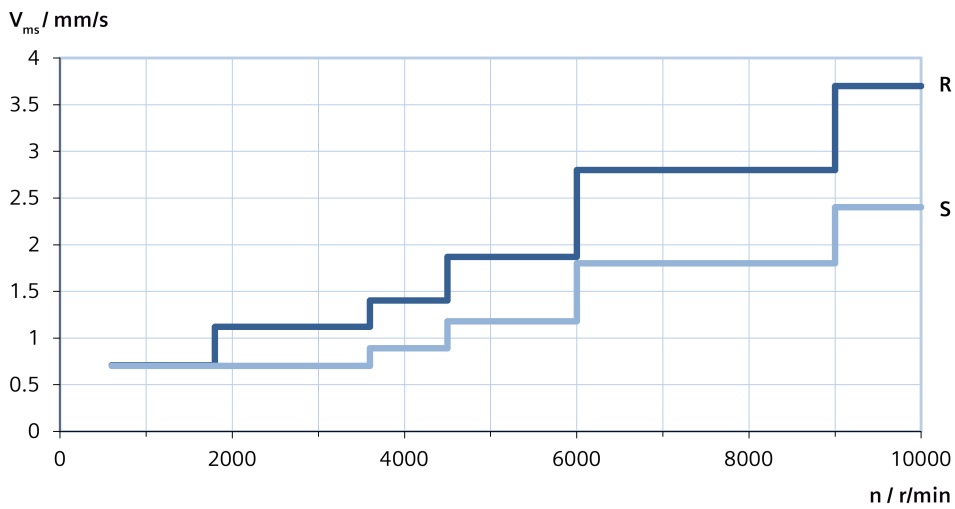

- 1PH11□□-1□F:

  B (up to 1800 r/min)

  S (1800 r/min to 10000 r/min)
- 1PH11□□-1□D:

  B (up to 1800 r/min)

  R (1800 r/min to 6000 r/min)

The vibration values indicated refer only to the motor. The system vibration response depends on the conditions at the installation location and can result in higher vibration values of the motor.

Different applications require different bearings. As a result, a high load capacity for radial forces is not compatible with a high speed and high vibration quality.

3.13 Noise emission

The sound pressure level (1 m) of the 1PH1 motors is no higher than 72 dB (A) when the following conditions are satisfied:

- At no-load operation
- At a speed up to the maximum speed

Preparation for use

4

4.1 Shipment and packaging

Checking the delivery for completeness

Upon receipt of the delivery, check immediately whether the components delivered are in accordance with the accompanying documents. Siemens will not accept any claims relating to components missing from delivery and which are submitted at a later date.

- Report any apparent transport damage to the delivery agent immediately.
- Report any apparent defects/missing components to the appropriate Siemens office immediately.

For detailed information about the components included in the package, see Chapter "Scope of delivery (Page 21)".

4.2 Transportation and storage

⚠ WARNING

Death, severe injury and/or material damage resulting from lifting and transporting

Improper lifting and transport procedures, unsuitable or damaged lifting gear and load handling equipment can cause death, severe injury and /or material damage.

- Only use suitable and intact lifting gear and load handling equipment which comply with the specific national regulations.
- Only use lifting gear and load handling equipment which are suitable for the weight of the motor. The weight of the motor appears on the rating plate.
- Do not attach any additional loads to lifting gear and load handling equipment.
- Only use suitable strap-guiding systems rope guides and spreading devices for lifting and transporting the motor.

WARNING

Danger to life as a result of incorrect transport and/or lifting of the motor

Incorrectly transporting and/or lifting the motor can lead to severe injuries and/or material damage. For instance, the motor can fall.

- Only lift the motor by using the lifting eyebolts on the bearing and shields.
- Use all of the lifting eyebolts when transporting.
- Do not attach a lifting eyebolt to the shaft extension.
- Never lift the motor by the encoder system.
- Use a crossbeam if you lift and /or transport the motor by using the eyebolts provided (according to DIN580). Note the following:
  - Completely screw in the eyebolts (lifting eyebolts) and tighten by hand, approx. 8 Nm. Do not overtighten the eyebolts.
  - Do not remove the pressboard washers and do not use deformed or damaged eyebolts.
  - Loads that run transverse to the ring plane are not permitted.
  - If the motor is installed with the shaft extension pointing downwards or upwards, the lifting eyebolts must be changed over. You can find the arrangement of the eyebolts in Chapter "Transporting (Page 50)".

4.2.1 Transporting

Note

Transportation conditions

Comply with the local national regulations for the transportation of motors.

Note

Observing the notes

Observe the information on the original packaging and in this documentation when transporting and setting down the motor.

NOTICE

Bearing damage during transport

If the customer has already mounted parts, for example coupling, belt pulley and so on, the bearing can be damaged during transport.

- In this case, make sure that the customer uses a rotor locking device.

Lifting and transporting the motor with a crossbeam (example)

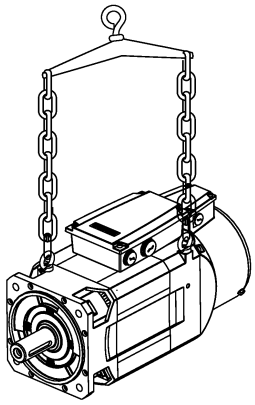

Location of the lifting eyebolts on the motor

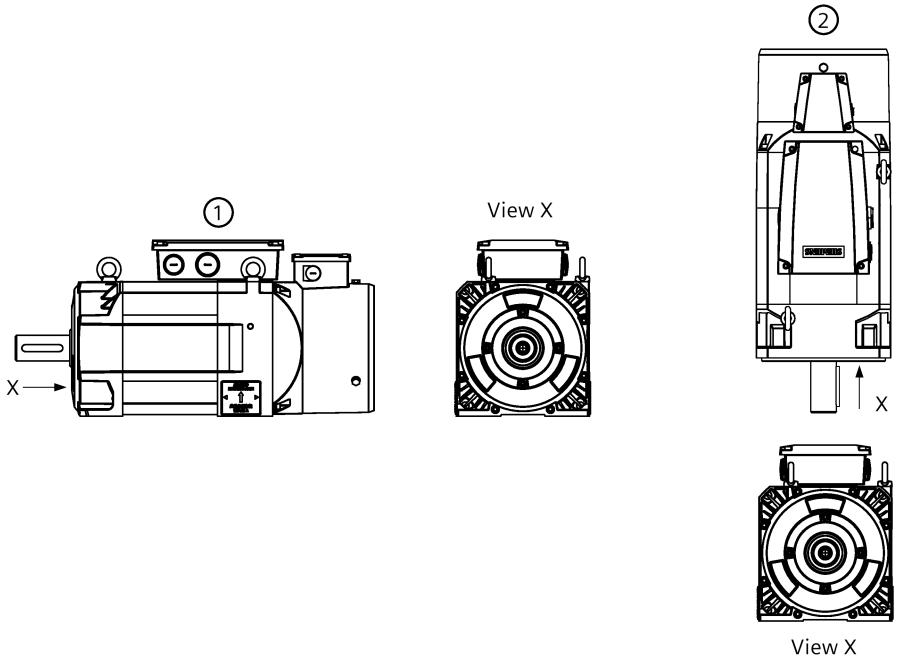

①	Horizontal shaft extension (standard)
②	Shaft extension pointing downwards

Transporting a motor that has already been operated

If you want to transport a motor that has already been operated, proceed as follows:

1. Cool down the motor.
2. Remove the connections established by the customer.
3. Always transport and lift the motor with the lifting eyebolts on the bearing end shields.

4.2.2 Storing

The motors can be stored for up to two years in a favorable condition without the specified bearing lifetime being reduced.

Note

Storage

If possible, store the motor in its original packaging.

Note

Replacing roller bearings

- Even if the motor has been stored for more than two years under favorable conditions, you must replace the bearings.
- If the motor has been stored under unfavorable conditions, you must replace the bearings after approximate 18 months.

NOTICE

Seizure damage to bearings due to the incorrect storage

If the motors are stored incorrectly, bearing seizure damage can occur, for example, brinelling, as a result of vibrations.

- Observe the instructions for storing the motor.

Short-term storage

To store the motor for less than six months, observe the instructions below:

- Apply a preservation agent to bare or external components for example, shaft extensions, if this has not already been carried out in the factory.
- Store the motor in an area that fulfills the following requirements:
  - Relative humidity: < 75%
  - Temperature: -15 °C to +55 °C
  - Vibration: V_{rms} < 0.2 mm/s
  - Well ventilated
  - Dust-free
  - Offers protection against extreme weather conditions
  - No harmful gases in the air of the storage area
- Protect the motor against shocks and humidity.
- Make sure that the motor is covered properly.
- Avoid contact corrosion. Siemens recommends you to rotate the shaft extension manually every three months.

Long-term storage

If you intend to place the motor in storage for longer than six months, you must ensure that the storage area satisfies the following contiditions.

Table 4- 1 Environmental conditions for long-term storage in the product packaging according to Class 1K3 to EN 60721-3-1 - with the exception of influencing environmental variables "Air temperature", "Highest relative humidity" and "Condensation"

Climatic ambient conditions	-15 °C to +55 °C
Highest relative humidity	< 60%, condensation not permissible
Mechanical ambient conditions	vibration-free storage room V_{rms} < 0.2 mm/s
Protection against chemical substances	Protected in accordance with Class 1C2
Biological ambient conditions	Suitable in accordance with Class 1B2
Duration	• Six months for the conditions listed above. • Special preservation measures are required for storage period of six months up to two years.

Check the correct state of the motor every six months.

- Check the motor for any damage.
- Carry out any necessary maintenance work.
- Document all preservation measures taken so that they can be reversed before the machines are recommissioned.
- Control the climate in the storage area if the conditions for storage cannot be complied with.
- Rotate the shaft extension by hand.

Condensation

The following ambient conditions encourage the formation of condensation:

- Large fluctuations of the ambient temperature
- Direct sunshine
- High air humidity during storage

Avoid these ambient conditions.

Use a dehydrating agent in the packaging.

Mounting the motor

5

Protection against the spread of fire

The device may be operated only in closed housings or in control cabinets with protective covers that are closed, and when all of the protective devices are used. The installation of the device in a metal control cabinet or the protection with another equivalent measure must prevent the spread of fire and emissions outside the control cabinet.

Protection against condensation or electrically conductive contamination

Protect the device, e.g. by installing it in a control cabinet with degree of protection IP54 according to IEC 60529 or NEMA 12. Further measures may be necessary for particularly critical operating conditions.

If condensation or conductive pollution can be excluded at the installation site, a lower degree of control cabinet protection may be permitted.

5.1 Overview

Safety symbols on the motor

The following warning and information labels are attached to the motor in the delivery state. Besides, the motor is supplied with three additional "Hot surface" warning labels.

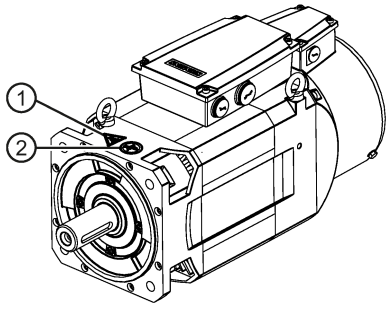

① "Hot surface" warning sign
② "No shocks on the shaft extension" warning sign

NOTICE

Thermal damage to temperature-sensitive parts

Some parts of the motor enclosure can reach temperatures that exceed 100 °C. If temperature-sensitive parts, for example, electric cables or electronic components are in contact with hot surfaces, they can be damaged.

- Attach the supplied "Hot surface" warning labels to the hot surfaces and ensure that no temperature-sensitive parts are in contact with hot surfaces.

NOTICE

Damage to the encoder due to shocking

Shocks at the motor shaft extension can cause an encoder damage.

- Do not exert any shock at the shaft extension.

Note

Technical data on the motor enclosure

- Observe the technical data on the rating plate on the motor enclosure.

For more mounting conditions, see Section "Technical data and characteristics (Page 109)".

5.2 Mounting orientation and outline dimensions

5.2.1 Mounting orientation

The SIMOTICS M-1PH1 motors support the following construction types:

- IM B3
- IM V5
- IM B5
- IM V1

For more information, see Section "Construction types (Page 31)".

Minimum clearance between a fan and adjacent components

The minimum clearance S between the air intake/air discharge opening and adjacent components must be maintained. For motor information, see Section "Cooling (Page 28)".

5.2.2 Outline dimensions

For more information about the motor dimensions, see Section "Motor dimensions (Page 32)".

5.3 Mounting the motor

In order to ensure smooth, vibration-free motor operation, a stable foundation design is required, the motor must be precisely aligned, and the components that are to be mounted on the shaft extension must be correctly balanced.

The following mounting instructions must be carefully observed:

- For high-speed machines, the complete unit should be dynamically balanced after couplings or belt pulleys have been mounted.
- Use suitable equipment when mounting drive elements. Use the thread at the shaft extension.
- Do not apply any shocks or axial pressure to the shaft extension.
- Especially for high-speed motors with flange mounting, it is important that the mounting is stiff in order to locate any natural frequency as high as possible so that it remains above the maximum rotational frequency.
- Thin sheets (shims) can be placed under the motor mounting feet to align the motor and to avoid mechanically stressing the motor. The number of shims used should be kept to a minimum.
- In order to securely mount the motors and reliably and safely transfer the drive torque, bolts with strength class 8.8 according to ISO 898-1 should be used.

Note

All flange-mounted motors must have a stable motor suspension assembly and for high field weakening speeds must be supported using the appropriate feet at the bearing end shield. For more information on foot/flange mounting, see Section "Mounting orientation and outline dimensions (Page 56)".

Support using feet at the bearing end shield is not required if the following conditions are maintained:

- For flange-mounted motors, there is a stable motor suspension design.
- The permissible vibration values according to DIN ISO 10816 are maintained.
- The maximum speed is limited (see Section "SIMOTICS M-1PH1 main motors (Page 109)").

Motors that are mounted, as a result of their type of construction, to the wall using the motor feet, must be fixed in place through the use of an adequately dimensioned positive form fit (for example, studs or mounting rails).

When commissioning the motors, it must be ensured that the permissible vibration values according to DIN ISO 10816 are maintained.

Note

Using the eyebolts

Lift the 1PH1 motor only at the eyebolts.

Note

Mount the motor so that the cooling air can enter and be discharged without any restrictions.

Flange mounting

Mount the motor through a mounting steel flange. Use four M12 screws with a tightening torque of 84 Nm.

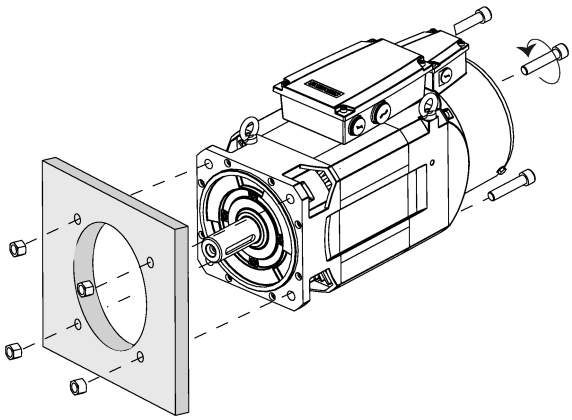

Foot mounting

Remove the anchor plates with a wrench, fix the motor to the mounting plate with screws, and then reinstall the anchor plates. You can use four screws to fix the motor as shown in the following figure:

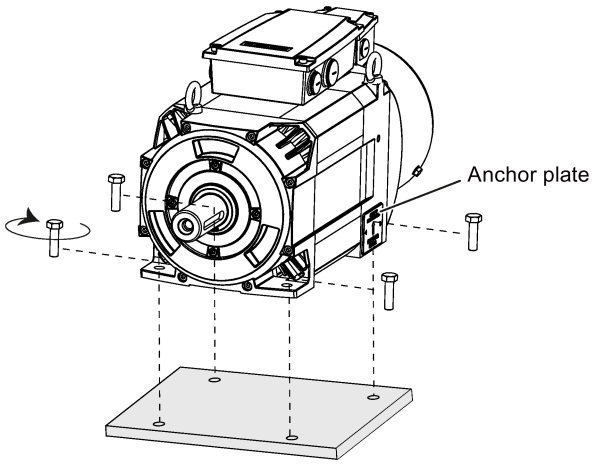

Motor variant	Screw	Tightening torque
1PH110□	4 × M10	39 Nm
1PH113□	4 × M12	84 Nm

5.4 Attaching the output elements

Balancing

The rotors are balanced dynamically. The motors are equipped with a smooth shaft as standard. For shaft extensions with feather keys, the balancing method at the DE of the shaft is indicated as follows:

- Shaft with key: full-key balancing (an "F" is stamped on the shaft face)
- Shaft with key: half-key balancing (an "H" is stamped on the shaft face)

Attaching the output components

Do as follows when attaching the output components:

- Make sure that the balancing method of the output components is correct. The output components must be balanced to balance quality grade G2.5 according to ISO 1940. Rotary forces that exceed this are not permissible. Note that rotary forces can also occur with coupling outputs.
- If an output component is shorter than the feather key with balancing type "H", you must remove the section of the feather key that protrudes from the shaft contour and output component to maintain the balance quality.
- Fit/remove the output components only using suitable equipment, as described below:
  - Use the threaded hole in the shaft extension (front).
  - If necessary, heat up the output components.
  - When removing the output components, use a washer to maintain the centering in the shaft extension.

⚠ WARNING

Danger to life if rotating output components have no guard

Exposed rotating output components can result in severe injury.

- Cover all exposed output components using an appropriate guard.

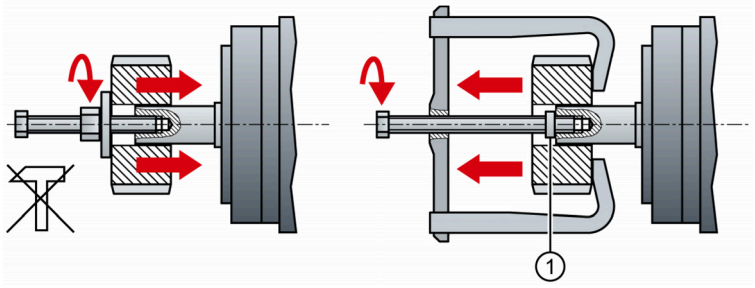

① Intermediate washer/disk (to protect the centering in the shaft extension)

Motor without output components

⚠ WARNING

Danger to life if the feather key is flung out

A feather key in the shaft is only secured during transport to avoid any falling out of the key. An open feather key sitting in the shaft will be flung out in operation. Death or serious injury can result.

- Remove an open feather key sitting in the shaft, or secure it so that it cannot be flung out.

5.5 Installation as a direct drive for spindles

General procedure

1. Run in the bearings.

   The bearings are run in at the factory in order to ensure that the bearing grease is displaced before the motor is shipped. This precaution protects the bearings against damage when the motor is accelerated to the maximum speed. However, it does not ensure optimum distribution of the lubricating film. Experience has shown that the lubricating film is not optimally distributed until the motor has been in operation for a significant period of time, that is, up to 30 hours.

   Before installing the motor, run in the bearings. This must be done for the following motors:

   – New motors
   – Motors that have been in transport for a long time
   – Motors that have been in storage for a long time

   Bearing noise will occasionally be audible during bearing run-in. The longer the motor is in operation, the quieter the bearings will become until the noise disappears altogether.

2. Mount the coupling half on the spindle.
   The radial/axial runout deviation between the coupling and the spindle axis will determine how smoothly the spindle will run when the coupling half is mounted.
   Observe the specified tolerances.

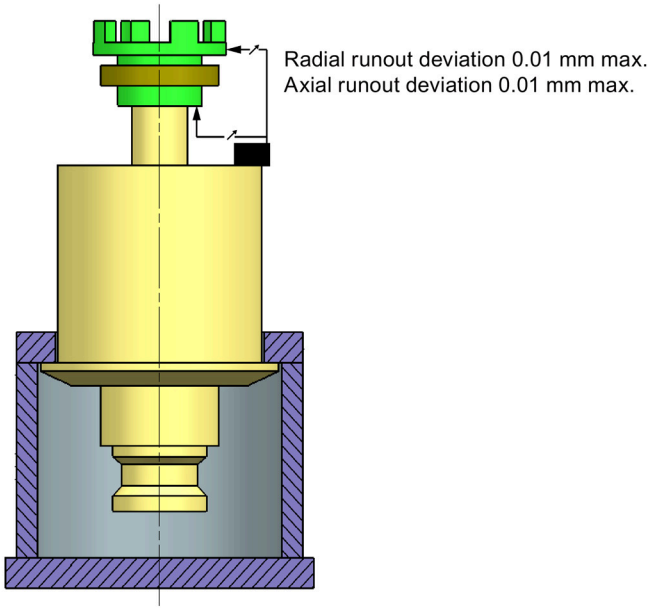

3. Balance the complete assembly (spindle with mounted coupling half).
   Balance the complete assembly, that is, spindle with the mounted coupling half, on a suitable fixture.
   Residual imbalance complies with G1.

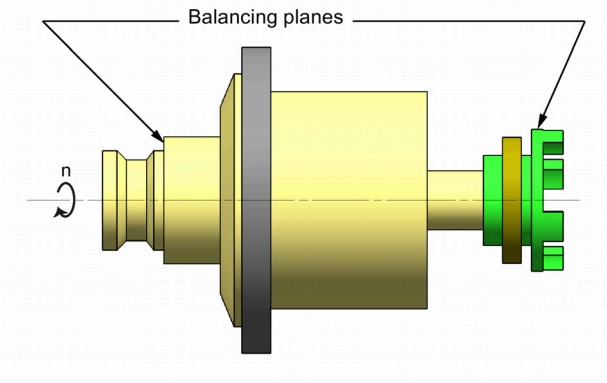

4. Install the spindle in the headstock.
   You need to align the location flange for the motor centering shoulder to ensure that the motor shaft and spindle shaft are precisely aligned. Make sure that the radial/axial runout deviation does not exceed 0.01 mm.
   For centering the motor, we recommend a G6 fit for the motor location flange.

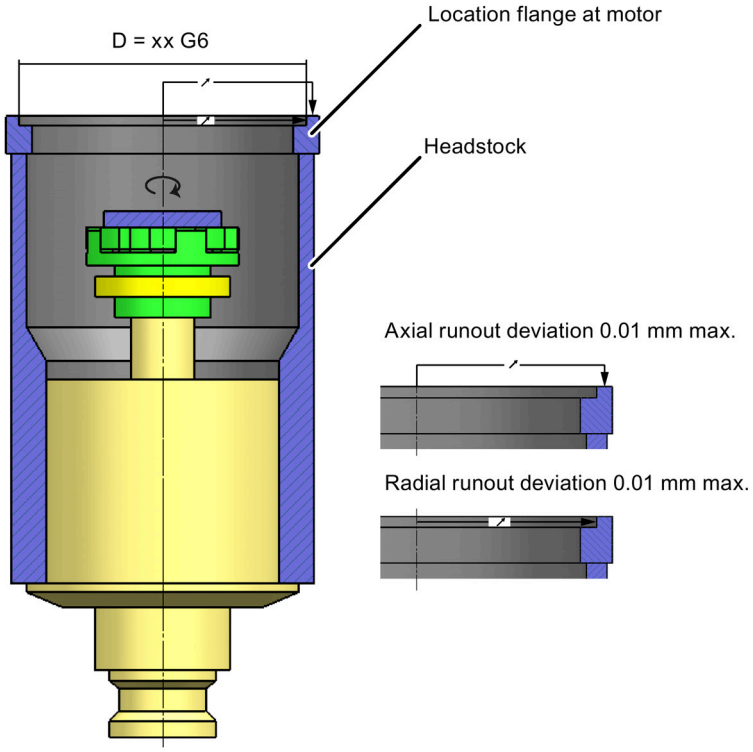

5. Mount the coupling half on the motor shaft.

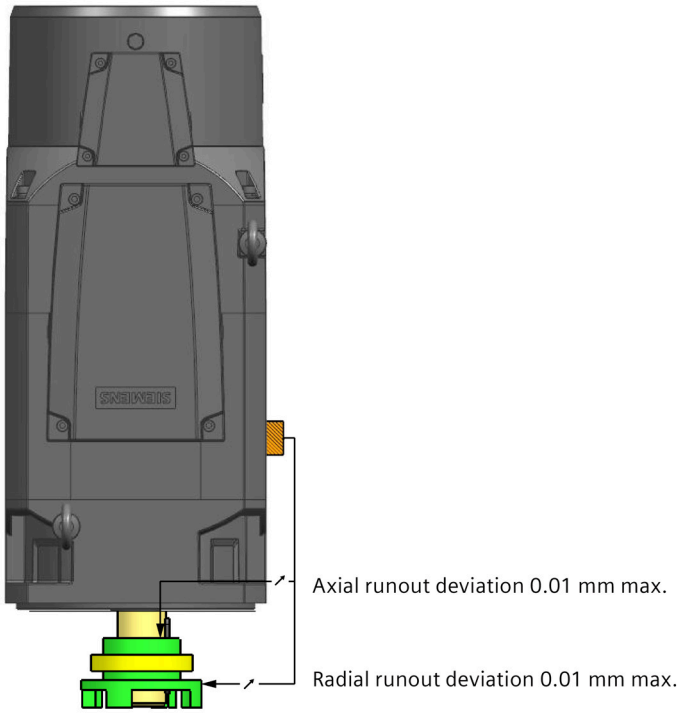

6. Balance complete assembly, that is, motor with the mounted coupling half.
   Balance the motor when it is completely assembled with the coupling half. The aim is to achieve the same vibration levels as the motor would exhibit without the coupling half.

7. Mount the motor on the headstock.
   The coupling must exhibit an axial clearance of between 1.5 mm and 2.5 mm in order to prevent constraining forces exerted by the motor/spindle assembly.

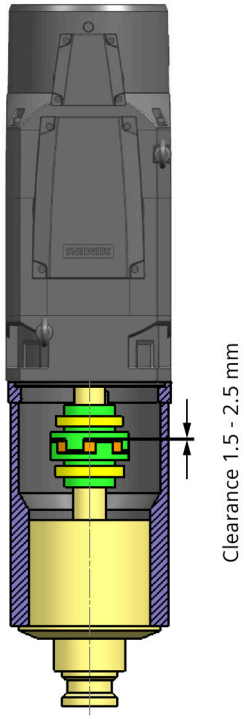

8. Check the smooth-running performance of the complete drive train.
   To ensure satisfactory smooth running and a long bearing service life, the specified vibration velocity values must not be exceeded at any point along the train.

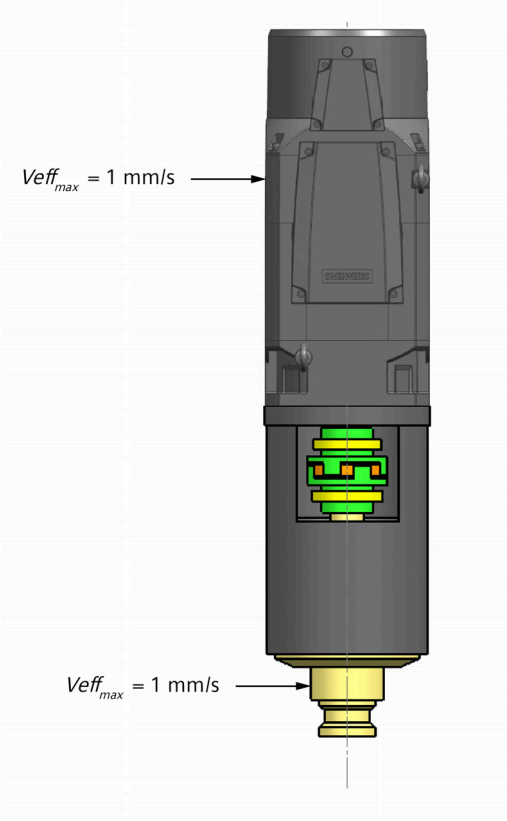

9. Balance the complete drive train.
   The complete drive train will need to be balanced if the specified vibration velocity values cannot be achieved.

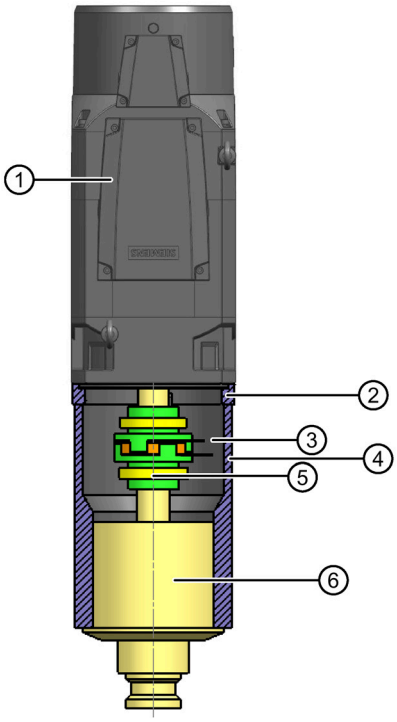

① 1PH1 motor
② Location flange for the motor
③ Coupling reference dimension
④ Spindle holder spindle housing
⑤ Rotex GS clamping ring hubs (steel)
⑥ Spindle

5.6 Notes on laying cables in drag chains

The MOTION-CONNECT cables between the drive and the motor, and setpoint cables between the drive and the controller satisfy requirements for use in drag chains.

Observe the following notes when laying these cables in drag chains:

Laying cables separately in the drag chain

- To ensure a long service life of the drag chain and cable, lay cables made of different materials separately with separating webs in the drag chain.
- Fill the webs evenly to ensure that the position of cables does not change during operation.
- Distribute cables as symmetrically as possible according to their weights and dimensions.
- Use webs to separate cables with different outer diameters.
- Keep cables untwisted in the drag chain.

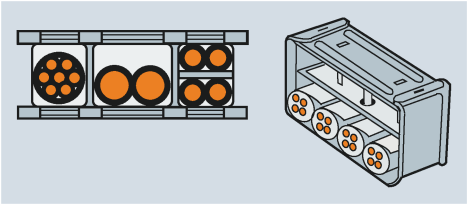

Observing minimum bending radius requirements

- Cables must be able to move without constraint, especially in the bending radii of the chain.
- Observe the specified minimum bending radii.

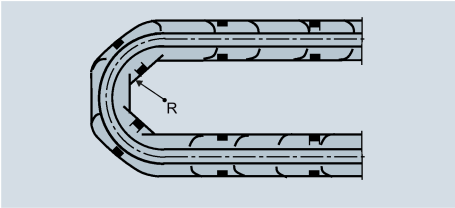

Fixing cables

- Make sure that cables in the drag chain are unattached and movable.
- Place the cable fixture in a "dead" zone at each end, suitably far away from each end point of the moving parts.

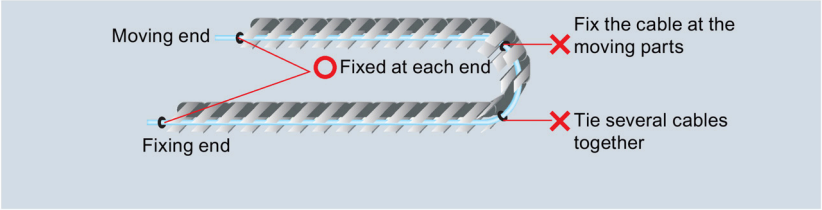

Electrical connection 6

6.1 Permissible line system configurations

In combination with the drive system, the motors are generally approved for operation on TN and TT systems with grounded neutral and on IT systems.

In operation on IT systems, the occurrence of the first fault between an active part and the ground must be signaled by a monitoring device. In accordance with IEC 60364-4-41, it is recommended that the first fault is eliminated as quickly as possible.

In systems with a grounded external conductor, an isolating transformer with grounded neutral (secondary side) must be connected between the line supply and the drive system to protect the motor insulation from excessive stress. The majority of TT systems have a grounded external conductor, and thus in this case an isolating transformer must be used.

6.2 Circuit diagram of the motor

You can find information on the circuit and on connecting the motor winding and auxiliary equipment (for example, the encoder) in the circuit diagram. The circuit diagram is provided in the motor terminal box for the cable connection.

6.3 Connecting the external fan

Technical data

Shaft height	Supply voltage	Frequency	Rated current	Rated power
100 mm	3 AC 380 V	50 Hz	0.12 A	52 W
132 mm	3 AC 380 V	50 Hz	0.18 A	40 W

For more information about the ventilation data and sound pressure level, see Sections "Cooling (Page 28)" and "Noise emission (Page 48)" respectively.

Connection

The external fan is connected in the fan terminal box. Connect the power supply in the fan terminal box, as shown in the figure below.

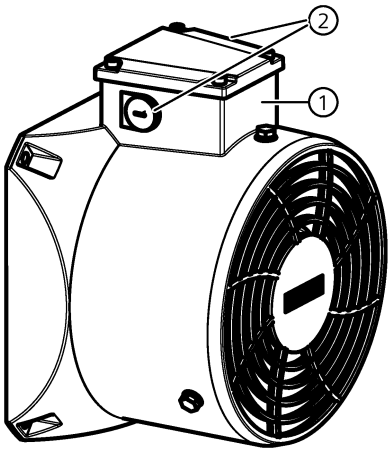

① Terminal box of the external fan

② Cable entries for line power connection on both sides of the fan terminal box housing

In the delivery condition, the cable entry is sealed with a plug.

Note

Cable gland

The general connection instructions for the cable glands must be observed. The continuous sealing of the cable gland toward the terminal box and the cable must be ensured.

NOTICE

Damage to the machine due to a short circuit

Water that accumulates at the cable glands can result in a short circuit, which can cause consequential damage to the machine.

- Make sure that the cable outlet does not face upward.

NOTICE

Incorrect direction of rotation

The external fan can be rotated in only one direction. Operation with the wrong direction of rotation can destroy the motor.

- If necessary, change the direction of rotation by interchanging any two conductors of the three phase conductors (U, V, and W) in the terminal box. You can find the arrow indicating direction of rotation on the fan rating plate.

6.4 System integration

6.4.1 SINAMICS drive I/O

CAUTION

Finger injuries caused by improper cable connection

When connecting cables to the drive interfaces with detachable connectors, fixing the cables directly to the connectors which have not been fitted onto the drive may result in finger injuries.

- First fit the connectors onto the drive, and then fix the cables to the connectors.

Connecting the SINAMICS V70 FSD servo system

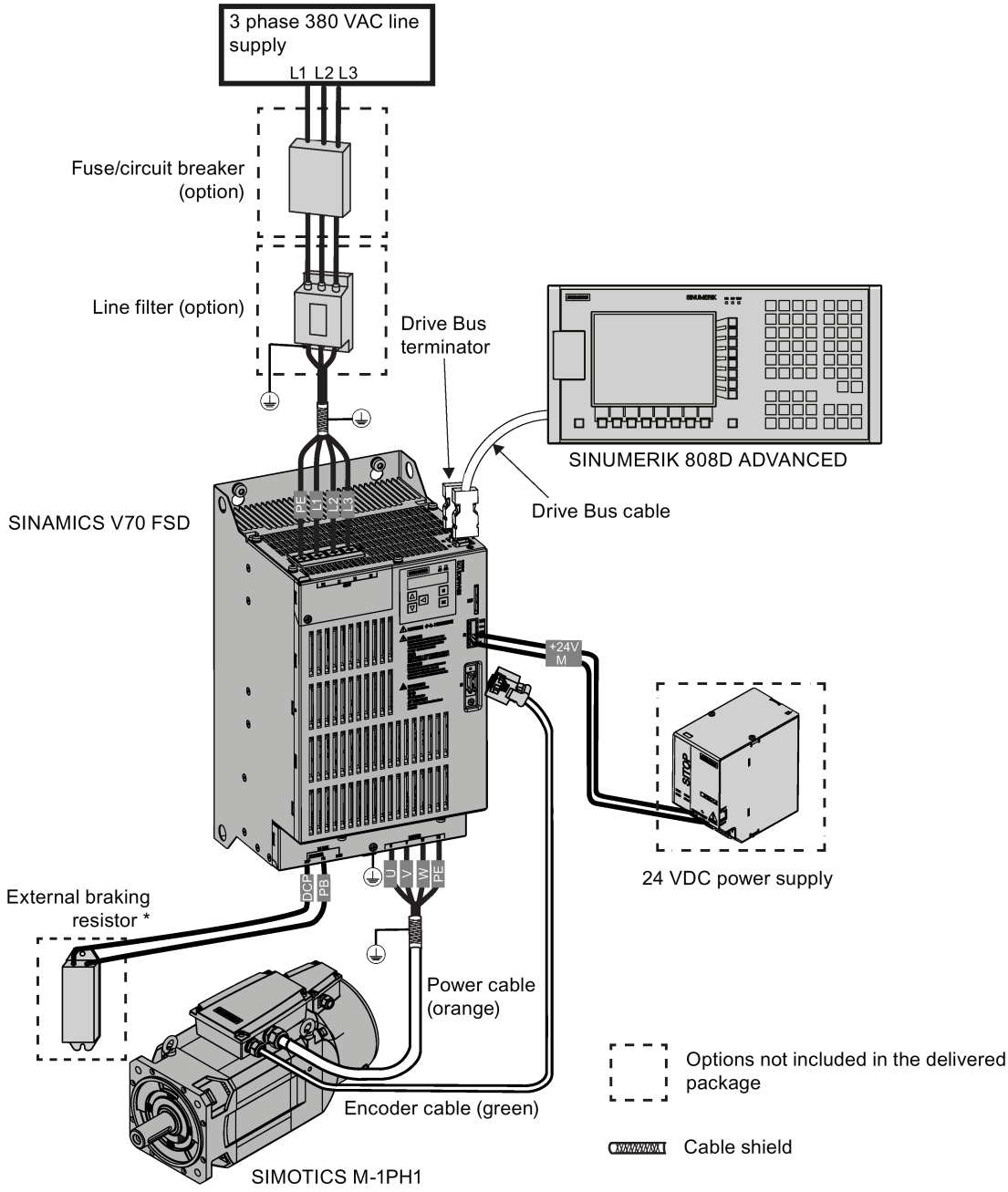

* No internal braking resistor is available with the V70 spindle drive. You must select an external braking resistor.

Connecting the SINAMICS G120 drive system

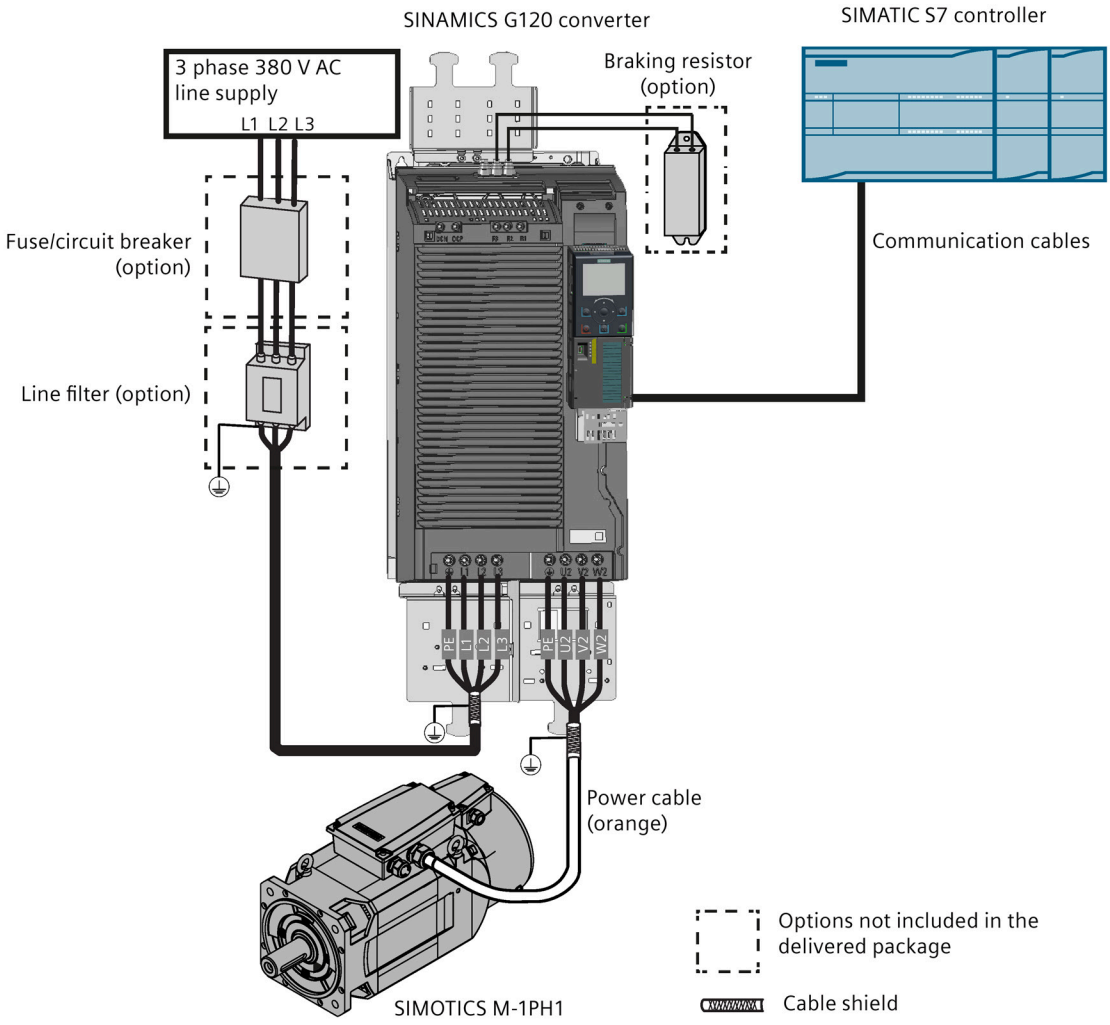

⚠ WARNING

Electric shock or short circuit due to improper connections

Improper connections have high risks of electric shock and short circuit, which will jeopardize personal safety and equipment.

- The drive must be directly connected with the motor. It is not permissible to connect a capacitor, inductor or filter between them.
- The line supply voltage must be within the allowable range (refer to the drive rating plate). Never connect the line supply cable to the motor terminals U, V, W or connect the motor power cable to the line input terminals L1, L2, L3.
- Never wire up the U, V, W terminals in an interchanged phase sequence.
- If the CE marking for cables is mandatory in some cases, the motor power cable, line supply cable and brake cable used must all be shielded cables.
- For terminal box connection, make sure that the clearances between non-insulated live parts are at least 5.5 mm.
- Route signal cables and power cables separately in different cable conduits. The signal cables shall be at least 10 cm away from the power cables.
- Cables connected may not come into contact with rotating mechanical parts.

6.4.2 Connecting-up information

Observe data on the motor rating plate data and circuit diagram in the motor terminal box. Use sufficiently dimensioned connection cables.

Note

System compatibility for connection

System compatibility is guaranteed only if shielded power cables are used and the shield is conductively bonded over a large area to the metal motor terminal box (with a metal EMC cable gland).

Shields must be incorporated in the protective grounding concept. Protective ground should be connected to conductors that are open-circuit and that are not being used and also electrical cables that can be touched. (Open-circuit cables result in capacitive charges/discharges.)

Use EMC cable glands for fixed cable entries. The cable glands are screwed into the threaded holes on the terminal box.

Openings that are not used must be closed with an appropriate metal cap.

Internal equipotential bonding

The equipotential bonding between the grounding terminal in the terminal box enclosure and the motor housing is established through the terminal box fixing screws. The contact locations underneath the screw/bolt heads are bare and are protected against corrosion.

Equipotential bonding between the terminal box cover and the terminal box enclosure can be provided by the normal fixing screws of the cover.

Selecting and connecting the cables

Observe the following when connecting cables:

- Twisted or three-core cables with an additional ground conductor should be used as power cables. The insulation should be removed from the ends of the conductors so that the remaining insulation extends up to the cable lug or terminal.
- The cables should be freely arranged in the motor terminal box so that the protective conductor has an enough length and the cable conductor insulation cannot be damaged. The cables should be appropriately strain relieved.
- Take special care that a required air clearance of ≥ 4.5 mm is actually maintained.

Checking/testing after connecting up

- The inside of the terminal box must be clean and free of any cable pieces.
- All of the terminal screws must be tight.
- The minimum air distances must be maintained.
- The cable glands must be reliably sealed.
- Unused cable glands must be closed and the plugs must be tightly screwed in place.
- All of the sealing surfaces must be in a perfect condition.

6.4.3 Routing cables

Rules for routing cables

In order to achieve the greatest possible EMC compatibility for the complete system, the following EMC measures must be carefully observed:

- Signal cables and power cables must be routed at the greatest possible distance from one another.
- If necessary, signal and power cables may cross one another (if possible at an angle of 90 °C), but must never be laid close or parallel to one another.
- Signal cables may not be routed close to strong external magnetic fields (e.g. motors and transformers).
- Pulse-loaded HC/HV lines must always be laid completely separately from all other lines.
- If signal lines cannot be routed a sufficient distance away from other cables, they must be installed in grounded cable ducts (metal).
- The clearance (interference injection area) between the following lines must be kept to a minimum:
  - Signal line and electrical circuit signal line (twisted)
  - Signal line and associated equipotential bonding conductor
  - Equipotential bonding conductor and protective conductor (routed together)

NOTICE
Damage to the motor due to improper cable routing Routing cables improperly in humid/moist environments can cause damage to the motor. • Route the power cables, encoder cables, and fan cables as shown in the figure below, especially in humid/moist environments.

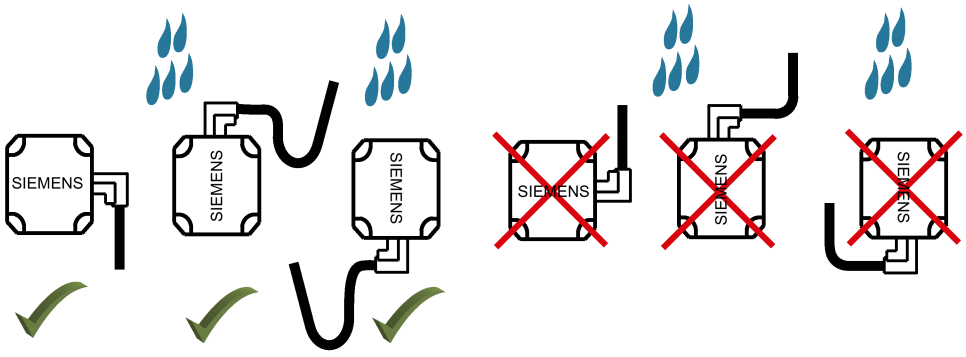

Minimum cable bending radius (R)

The minimum cable bending radii are listed as follows:

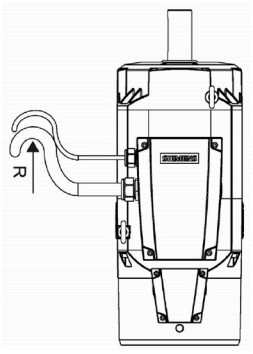

Cable type	Cable cross-section (mm^2)	Minimum static bending radius (mm^2) 1)	Minimum dynamic bending radius (mm^2) 2)
Power cable	4 x 2.5	5 x 10	180
	4 x 4	5 x 11.4	210
	4 x 10	5 x 20	360
	4 x 16	5 x 24.2	440
Encoder cable	6 x 0.2 + 4 x 0.25	5 x 7.4	20 x 7.4

1) = 5 x outer diameter

2) = 20 x outer diameter (encoder cable only)

6.4.4 Terminal boxes

WARNING

Thermally damaged connecting cables

If connection cables have a conductor cross section that is too small for the application, the connection cables can be thermally damaged. This can result in personal injury and damage to property due to electric shock and fire hazard.

- Carefully observe the current which the motor draws for your particular application. Adequately dimension the connecting cables according to IEC 60204-1 or IEC 60364-5-52.

NOTICE

Damage to cables or connectors

- Do not put much stress upon cables or connectors while wiring.

6.4.4.1 Motor terminal box

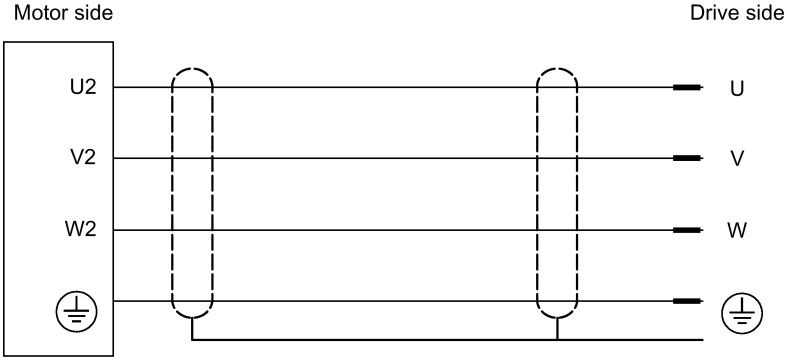

Terminal box connection

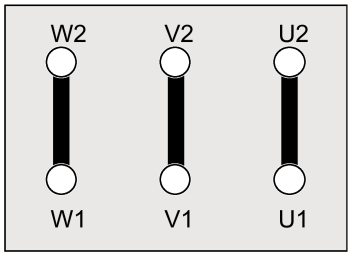

6.4.4.2 Fan terminal box

Connect the external fan via the fan terminal box. Implement operation of the fan via a circuit breaker.

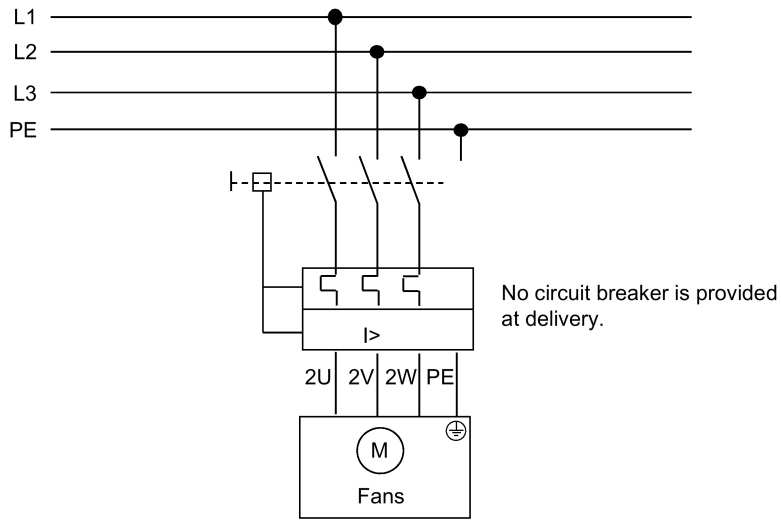

Terminal box connection

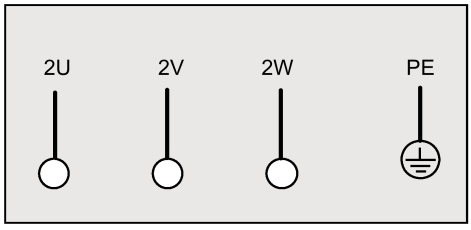

6.4.5 Connecting the terminal boxes

Note

- The recommended sequence for cable connections is as follows: encoder cable first, power cable next, and then the fan cable.
- There are threaded holes available on both sides of the terminal box housing for you to pass the cables through. You can select to connect the individual cables to the terminal boxes from the threaded holes on the desired side.
- No fan cable is provided at delivery. When connecting your own fan cable, make sure you connect the fan terminals U, V, and W correspondingly to the line supply terminals L1, L2, and L3 of the machine tool using appropriate cable connectors.

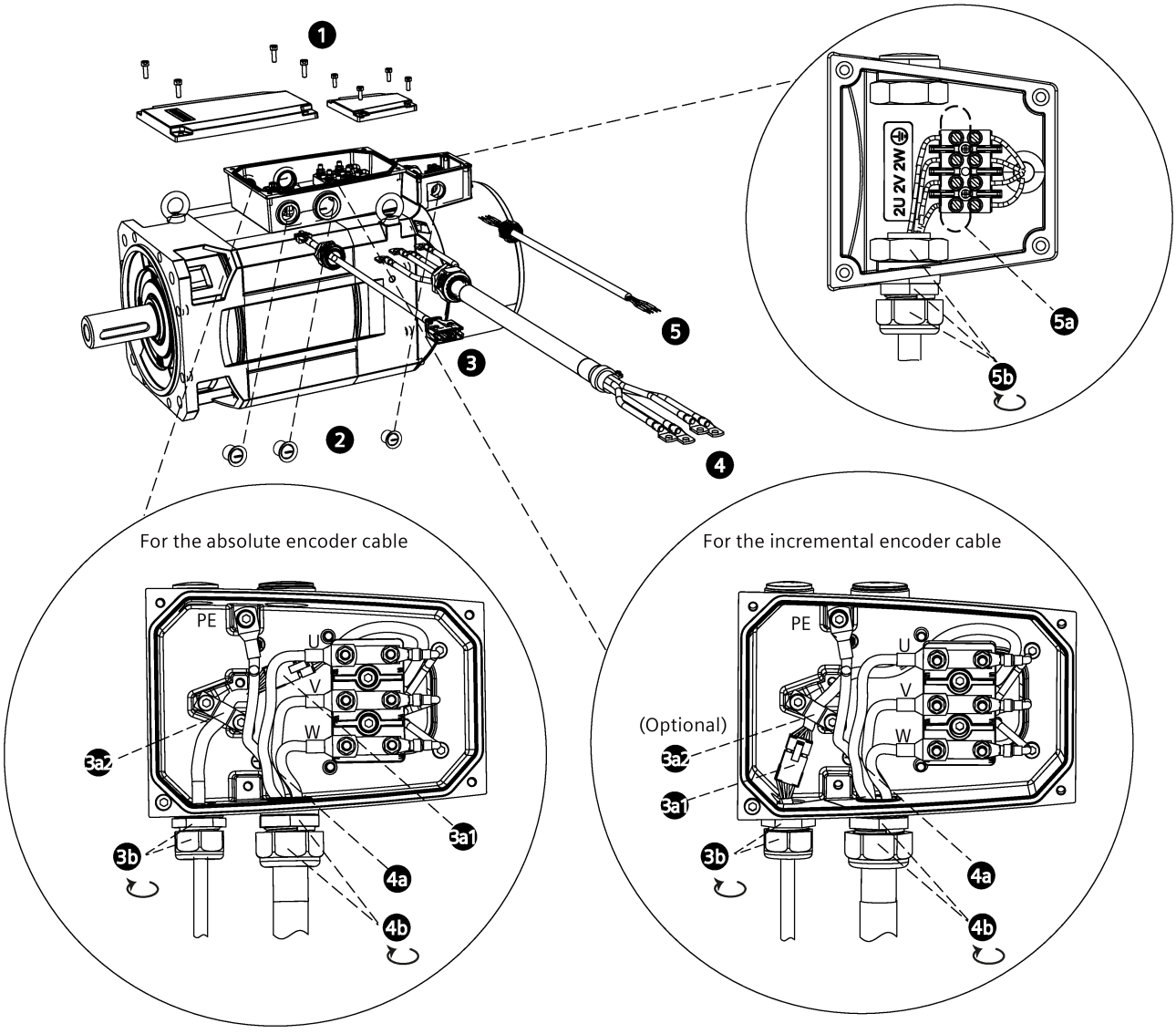

1. Loosen the screws on the top of both the motor terminal box and the fan terminal box to remove the terminal box covers.
2. Remove the three screw plugs on one side of the two terminal boxes.
3. Loosen the cable gland pre-assembled on the encoder cable. Pass the encoder cable through the first threaded hole in the motor terminal box housing. Follow the steps below to connect the encoder cable to the motor terminal box:
   - For the absolute encoder cable:

3a1. Insert the male connector of the absolute encoder cable into the female connector in the motor terminal box.

3a2. Remove from the terminal box the grounding screws as well as the hose clamp. Lay the absolute encoder cable appropriately. Place the hose clamp onto the cable shield, and then tighten the screws. You can select to fix the cable in the desired direction by screwing the hose clamp at any two of the three screw holes.

- For the incremental encoder cable:

3a1. Insert the male connector of the incremental encoder cable into the female connector in the motor terminal box.

3a2. (Optional) You can select to fix the cable in the desired direction by screwing the hose clamp at any two of the three screw holes. For detailed information about how to fix the cable, see step 3a2 for connecting the absolute encoder cable mentioned above.

3b. Tighten the cable gland of the encoder cable onto the threaded hole.

4. Pass the power cable through the cable gland, and then through the second threaded hole in the motor terminal box housing. Follow the steps below to connect the power cable to the motor terminal box:

4a. Remove from the terminal box the three binding post nuts that correspond to the power cable terminals U, V, and W. Place the three terminal lugs at the end of the power cable conductors onto the corresponding binding posts. Fasten the cable conductors with the nuts (3 x M5, max. 4.7 Nm). Remove the grounding screw for power terminal PE. Place the terminal lug of the PE conductor on the grounding screw, and then tighten the screw for the PE terminal (1PH110□: 1 x M5, max. 4.7 Nm; 1PH113□: 1 x M6, max. 4.7 Nm).

4b. Tighten the cable gland of the power cable onto the threaded hole.

5. For 1PH113□ motors: pass your own fan cable (recommended cable outer diameter: 4 mm to 8 mm) through the cable gland, and then through the threaded hole in the fan terminal box housing.

   For 1PH110□ motors: first pass your own fan cable (recommended cable outer diameter: 4 mm to 8 mm) through the cable gland, next the fan cable hole, and then through the lock nut within the fan terminal box housing.

   Follow the steps below to connect the power cable to the motor terminal box:

5a. Loosen the four screws that correspond to the fan cable terminals U, V, W and PE. Insert the terminal lugs at the end of fan cable conductors into the corresponding sockets under the binding posts, and then fasten the cable conductors with the screws.

5b. For 1PH113□ motors, tighten the cable gland of the fan cable onto the threaded hole.

   For 1PH110□ motors, tighten the cable gland of the fan cable onto the threaded lock nut within the fan terminal box.

6. Replace the covers of the terminal boxes, and then tighten the screws respectively for the motor terminal box (4 x M5: max. 4.7 Nm) and the fan terminal box (4 x M4: max. 2.4 Nm).

NOTICE

Damage to the motor

- After you finish connecting the terminal boxes and start the motor, make sure the fan rotates in the correct direction as indicated by the arrow marked on the fan rating plate; otherwise, the motor may be damaged due to overheat.

6.4.6 Encoder system

6.4.6.1 Overview

The encoder system of the 1PH1 motors is specified with the corresponding letter in the 9th position of the article number of the motor.

9th position of the article number	Encoder	Applicable drives
H	Absolute encoder, single turn 20-bit	V70 spindle drive
L	Incremental encoder, TTL 2500 ppr	V70 spindle drive/G120/S120 (SMC30)

Technical data

	Absolute encoder	Incremental encoder TTL
Operating voltage	5 V DC ± 10%	5 V DC ± 10%
Operating temperature	- 15 °C ... + 120 °C	- 15 °C ... + 120 °C
Storage temperature	- 40 °C ... + 100 °C	- 40 °C ... + 100 °C
Resolution	20-bit	2500 ppr
Accuracy	± 100 "	± 100 "
Maximal current consumption	120 mA	200 mA
Relative humidity	95%	95%
Interface	BiSS	TTL

6.4.6.2 Encoder connection

Encoder connector

The 1PH1 motors use 10-pin connector for the incremental encoder and 8-pin connector for the absolute encoder:

Illustration	Pin No.	Incremental encoder		Absolute encoder	
		Signal	Description	Signal	Description
Incremental encoder: 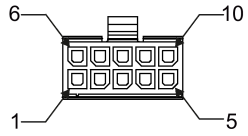 Absolute encoder: 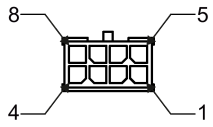	1	P_Supply	Power supply 5 V	P_Supply	Power supply 5 V
	2	M	Power supply 0 V	M	Power supply 0 V
	3	A+	Phase A+	n. c.	Not connected
	4	A-	Phase A-	Clock_N	Inverted clock
	5	B+	Phase B+	Data_P	Data
	6	B-	Phase B-	Clock_P	Clock
	7	R+	Phase R+	Shielding	Grounding
	8	R-	Phase R-	Data_N	Inverted data
	9	Shielding	Grounding	-	-
	10	n.c.	Not connected	-	-

Wiring

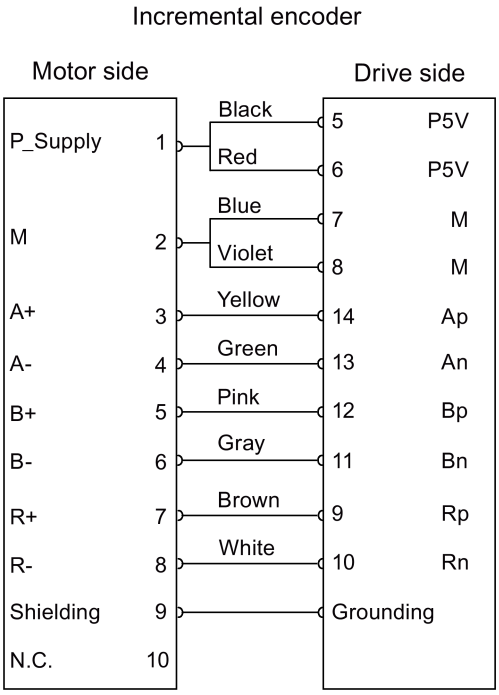

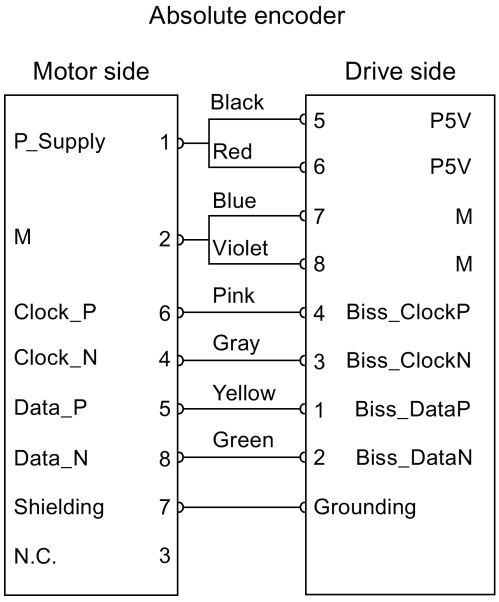

Grounding the shielded encoder cable

NOTICE
Cable shielding The encoder cable must be shielded to meet the EMC requirements. The maximum permissible length is 30 m.

To ensure better EMC compliance, you are recommended to strip the encoder cable and connect the cable shield to earth to enhance the grounding effect.

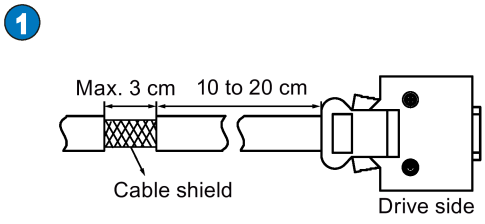

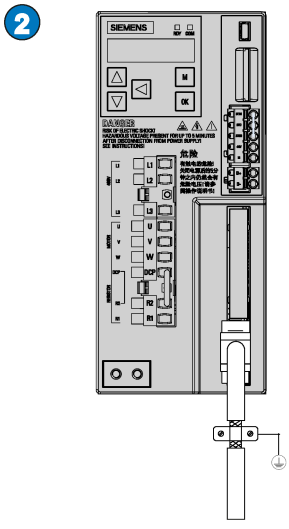

Configuration 7

7.1 SINAMICS configuring procedure

Motion Control

The 1PH1 motors are optimized for motion control applications. They execute linear or rotary movements within a defined movement cycle. All movements must be performed in a time-optimized manner. As a result, the 1PH1 motors must meet the following requirements:

- High dynamic response, for example, short rise time
- High overload capability, that is, large acceleration margin
- Wide control range, that is, high resolution for precise positioning

General configuring procedure

The function description of the machine provides the basis for configuring the drive application. The components are selected according to physical interdependencies and the selection process is usually carried out in the following sequence of steps:

Step	Configuration activity description	Remarks
1.	Clarification of the drive type	For more information, see Section "Specifying the duty cycle (Page 85)".
2.	Definition of supplementary conditions and integration into an automation system	
3.	Definition of the load, calculation of the maximum load torque, and selection of the motor	
4.	Selection of the drive system	-
5.	Repetition of steps 3 and 4 for additional axes	
6.	Specification of the required control performance, selection of the controller, and definition of component cabling	
7.	Definition of other system components (for example, braking resistors)	
8.	Calculation of the current demand of the 24 V DC supply for the components	
9.	Selection of the components for the connection system	
10.	Configuration of the drive line-up components	
11.	Calculation of the required cable cross sections for power supply and motor connection	
12.	Inclusion of mandatory installation clearances	

Clarification of the type of drive

The motor is selected on the basis of the required torque, which is defined by the application, for example, traveling drives, hoisting drives, test stands, centrifuges, paper and rolling mill drives, feed drives, or main spindle drives. Gearboxes used to convert motion or to adapt the motor speed and motor torque according to the load conditions must also be considered.

In addition to the load torque that is determined by the application, the following mechanical data is among those required for the calculation of the torque to be provided by the motor:

- Mass to be moved
- Diameter of the drive wheel
- Leadscrew pitch and gear ratio
- Frictional resistance
- Mechanical efficiency
- Traversing path
- Maximum velocity
- Maximum acceleration and maximum deceleration
- Cycle time

Asynchronous motors can be used to increase maximum speeds in the field-weakening range. Asynchronous motors for higher power ratings are also available.

The following factors are especially important when you configure a drive application:

- The ambient temperature and installation altitude of the motors and drive components.
- Heat dissipation from the motors through forced ventilation

The motor-specific limiting characteristics provide the basis for defining the motors.

Other constraints apply when you integrate the drives into an automation environment such as SINUMERIK.

The motor is selected based on the load that is specified by the application. Different characteristic curves must be used for different load events.

The following operating scenarios have been defined:

- Duty cycle with a constant ON period
- Duty cycles with a varying ON period
- Free duty cycle

The objective is to identify characteristic torque and speed operating points that can be used as a basis for selecting the motor depending on the load.

7.2 Specifying the duty cycle

Duty cycles with a constant ON period

For duty cycles with a constant ON period, there are specific requirements for the torque characteristic curve as a function of the speed, for example, M = constant, M ~ n^2, M ~ n, or P = constant.

The figure below shows the S1 duty cycle for continuous operation.

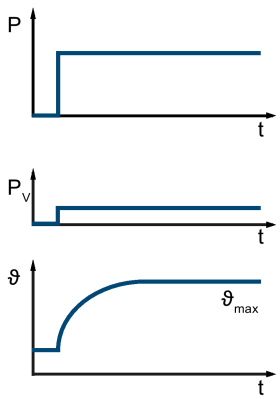

These drives typically operate at a specific operating point and are dimensioned for a base load. The base load torque must lie below the S1 characteristic curve. An overload rating is provided for transient overloads (for example, during acceleration). The overload current must be calculated relative to the required overload torque. The peak torque must lie below the voltage limiting characteristic curve.

Duty cycles with a varying ON period

Besides continuous duty cycles (S1), standard intermittent duty cycles (S6) are defined for duty cycles with a varying ON period. This is a mode of operation consisting of a series of similar cycles, with each one comprising one time period with a constant load and one idle time period. There is no pause.

The figure below shows the S6 duty cycle for continuous duty with an intermittent load.

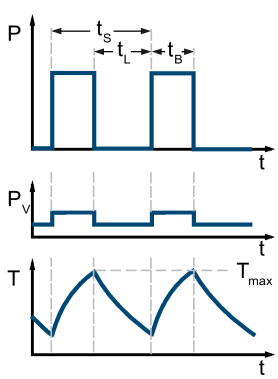

Designation example:
S6-40%, 11 kW (15 Hp)

Cyclic duration factor $= \frac{t_B}{t_B + t_L}$, t_S = 10 min

The following fixed variables (overload factors) are usually applied to the relative ON period:

- S6-40%
- S6-25%
- S6-15%

Free duty cycle

The figure below shows a load duty cycle that defines the characteristics of the speed and torque of the motor with respect to the time.

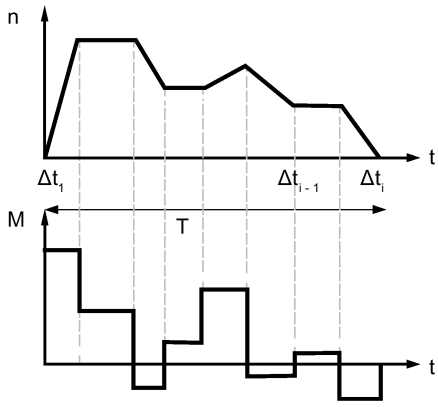

A load torque is specified for each time period. In addition to the load torque, the average load moment of inertia and motor moment of inertia must be taken into account for acceleration. It may be necessary to take into account a frictional torque that opposes the direction of motion.

If a gearbox has been mounted, in determining the load and acceleration torque required by the motor, the gear ratio and the gear efficiency must be considered. A higher gear ratio increases positioning accuracy in terms of encoder resolution. For any given motor encoder resolution, as the gear ratio increases, the resolution of the machine position to be detected increases.

Permissible motor torque

Once the application has been defined and specified, the maximum motor torque is calculated. Generally, the maximum motor torque is required during acceleration. The load torque and the torque required to accelerate the motor are added.

The maximum motor torque is then verified with the limiting characteristic curves of the motor.

The following criteria must be taken into account when you select the motor:

- The dynamic limits must be adhered to, that is, all speed-torque points of a certain load event must lie below the relevant limiting characteristic curve.
- The thermal limits must be adhered to, that is, the effective motor torque at the average motor speed resulting from the duty cycle must lie below the S1 characteristic curve (continuous duty). The effective value of the motor current within a duty cycle must be less than the rated motor current.
- In the field-weakening range, the permissible motor torque is restricted by the voltage limit characteristic (stability limit).

Note

Rated pulse frequency

The rated pulse frequency of the 1PH1 motors is 4 kHz. Operation of the motors with a rated pulse frequency of less than 4 kHz is not permitted.

7.3 Selecting motors

Characteristic curves for asynchronous motors

The speed-power diagrams and speed-torque diagrams for operation with the SINAMICS converter system are described in the motor characteristics. For more information, see Section "Characteristics (Page 111)".

Depending on the motor variant, the S1 characteristic (continuous operation) is available from standstill to the rated point with the maximum permissible thermal torque, or passes through the constant-torque range. The power increases in proportion to the speed depending on the available torque.

This is then followed by a constant-power range where the field is weakened (field-weakening range). The field-weakening range is limited by the voltage limit.

For the 1PH1 motors, the S6 characteristics are shown in addition to the S1 characteristic.

The figure below shows the typical speed-power diagram:

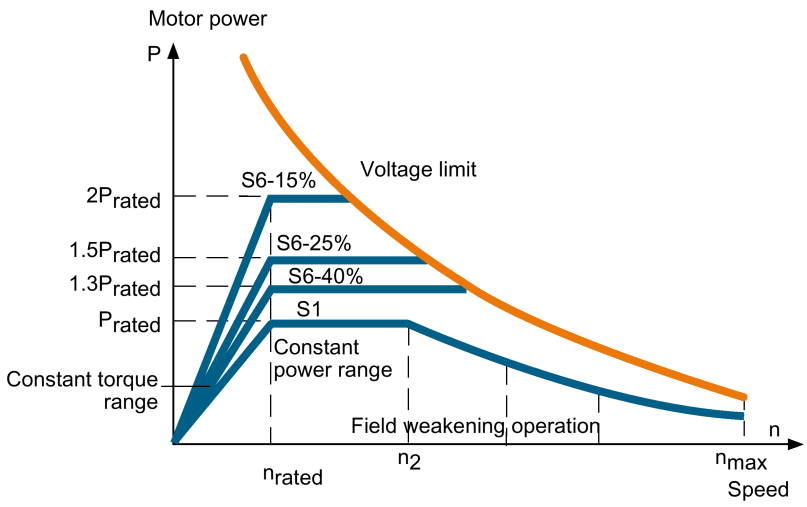

In order that safe, reliable operation is guaranteed even when the line supply voltage fluctuates and the motor parameters vary, a safety margin of at least 10% should always be maintained to the voltage limit at every operating point depending on the type of supply voltage of the Motor Module and Line Module.

The 1PH1 motors have a high overload capacity in the constant power range. The theoretical curve of the maximum permissible overload capacity is shown as a limit in the characteristic diagrams.

Commissioning 8

8.1 Safety instructions for commissioning

⚠ WARNING

Danger to life due to touching a live part when the insulation is damaged as a result of the high-voltage test

The motor insulation can be damaged when a motor high voltage test is carried out. You can get an electric shock when touching live components. Further, electronic components can be destroyed. The components involved include temperature sensors and encoders.

- Do not carry out a high-voltage test on the motor.

⚠ WARNING

Danger to life as a result of rotating output elements and loose parts that are flung out

Rotating output elements and feather keys that are flung out while the motor is running can result in severe injuries.

- Remove any loose feather keys or secure them so that they cannot be flung out.
- Do not touch any rotating parts.
- Secure output elements by using the appropriate safety guards.

⚠ WARNING

Danger to life when the forced ventilation draws in hair and articles of clothing

Hair, ties, and articles of clothing drawing into the machine at the air intake can cause severe injury or death.

- Remove any ties or similar.
- Wear a hat or hair net to prevent hair from being drawn in.
- Keep the air intake area free of any loose objects.
- Take the appropriate protective measures to prevent hair and articles of clothing from being drawn in.

NOTICE

Thermal damage to temperature-sensitive parts

The motors can have surface temperatures of over 100 °C. Temperature-sensitive parts in contact with the motor or attached to the motor can be damaged. Temperature-sensitive parts include cables and electronic components.

- Never attach temperature-sensitive parts to the motor.
- Ensure that no temperature-sensitive parts are in contact with the motor.

NOTICE

Motor damage resulting from the overheating

Windings and bearings can be destroyed if the motor overheats.

- Only operate motors in conjunction with effective temperature control.

NOTICE

Motor damage when the maximum speed is exceeded

The maximum speed n_{max} is the highest permissible operating speed. The maximum speed n_{max} is stamped on the rating plate. The motor can be damaged if operated at inadmissible speeds.

- Ensure that the maximum permissible speed is not exceeded. To realize this, use a suitable control system or activate the speed monitoring function in the drive.

8.2 Checklists for commissioning

Note

Checks that are required

The following lists do not claim to be complete. It may be necessary to perform additional checks and tests in accordance with the situation specific to the particular installation site.

- Install and connect the motor properly before commissioning the system.
- Commission the drive system corresponding to the operating instructions of converters.
- Familiarize yourself with the safety instructions and observe the following checklists before starting any work.

General checking

Checking items	OK
Are all of the necessary components of the configured drive line-up available, correctly dimensioned, installed and connected?	
Are the manufacturer's documentations for the system components and the SIMOTICS M-1PH1 main motors available?	
If the 1PH1 motors are operating in a SINAMICS V70 spindle drive system, are the checklists related to the commissioning in the SINUMERIK 808D ADVANCED Commissioning Manual carefully observed?	
If the 1PH1 motors are operating in a SINAMICS G120 drive system, are the checklists related to the commissioning in the SINAMICS G120 user manuals carefully observed?	
Do you know the type of the to-be-commissioned motor clearly? 1PH1 _ _ _ - _ _ _ _ _ - _ _ _ _	
Are the environmental conditions in the permissible range?	

Checking the mechanical system

Checking items	OK
Have all touch protection measures for moving and live parts been taken?	
Has the motor been correctly mounted and aligned?	
Can the shaft be rotated smoothly?	
Do the operating conditions correspond to the data specified on the rating plate?	
Are all mounting screws, connecting elements, and electrical connections tight and attached properly?	
Do the output elements have the correct setting conditions according to the type? Examples: • Have the couplings been aligned and balanced? • Has the tension of a belt drive been correctly adjusted? • Have the gear tooth flank and gear tooth tip clearance as well as radial clearance been correctly adjusted for geared outputs?	

Checking the electrical system

Checking items	OK
Has the motor been connected properly so that it can rotate in the specified direction?	
Have the minimum insulation resistance values been maintained?	
Have the grounding and equipotential bonding connections been correctly established?	

Checking monitoring devices

Checking items	OK
Has it been ensured that the motor speed no higher than the maximum speed n_{max} can be reached (is the drive speed limited)?	
Have all supplementary motor monitoring devices and equipment been correctly connected and are they functioning correctly?	

Checking the cooling system

Checking items	OK
Have you checked all safety-related and function-relevant details? Examples: • Is the electrical installation of the fan, including accessories OK, for example, has the protective conductor been connected? • Are the mechanical installation and electrical installation of the safety-relevant components OK? These include the installation of a circuit breaker and attaching protective guards. • Are the cable entry glands correctly sealed? • Are the fan air intake and the area around the fan blades free of foreign bodies? • Does the minimum clearance S between the air intake/air discharge opening and adjacent components be complied with? • Does the fan have the correct direction of rotation? An arrow is stamped on the fan rating plate. This arrow indicates the correct direction of rotation of the fan. When the fan starts, you can visually check the direction of rotation using the arrow. The fan functions correctly if the direction of rotation matches the direction of the arrow on the fan rating plate.	

Checking roller bearings

Checking items	OK
Are the roller bearings OK?	
For motors that were stored, were the storage conditions and bearing change intervals complied with?	

8.3 Checking the insulation resistance

After long storage or shutdown periods, the insulation resistance of the windings must be measured to ground with direct voltage.

⚠ WARNING

Danger to life through electric shock

During and immediately after the measurement, the terminals are in some cases at hazardous voltages, which can lead to death when touched.

- Only check the insulation resistance if you are appropriately qualified to do this.
- Before measuring the insulation resistance, read the manual for the insulation resistance meter you are going to use.
- Never touch the terminals when making measurements or immediately after the measurement.
- Check the connected supply feeder cables to ensure that the line supply voltage cannot be connected.

Note the following requirements when you measure the insulation resistance:

- Always measure the insulation resistance of the winding to the motor enclosure when the winding temperature is between 20 °C and 30 °C.
- When performing the measurement, wait until the final resistance value is reached (this takes approx. one minute).

Limits

The table below specifies the measuring circuit voltage as well as the limit values for the minimum insulation resistance and the critical insulation resistance with a rated motor voltage of U_N < 2 kV.

Stator winding insulation resistance at 25 °C

Measurement voltage	500 V (at least 100 V)
Minimum insulation resistance with new, cleaned, or repaired windings	10 MΩ
Critical specific insulation resistance after a long operating time	0.5 MΩ/kV

Note the following:

- Dry, new windings have an insulation resistance of between 100 MΩ and 2000 MΩ (sometimes higher).

  If the insulation resistance is close to the minimum value, this could be due to humidity and/or an accumulation of dirt.

- The insulation resistance of the motor winding can drop during the course of its service life due to ambient and operational influences. The critical insulation resistance for a temperature of 25 °C on the winding can be calculated by multiplying the rated voltage (kV) by the specific critical resistance value (0.5 MΩ/kV)

  Example: Critical resistance for a rated voltage (V_N) of 0.6 kV

  0.6 kV × 0.5 MΩ/kV = 0.3 MΩ

Note

Cleaning and/or drying the windings when reaching critical insulation resistance

If the critical insulation resistance is less than or equal to this value, the windings must be dried or, if the fan is removed, cleaned thoroughly and dried.

Note that the insulation resistance of dried, clean windings is lower than that of warm windings. The insulation resistance can only be evaluated accurately when measured on a winding that has been cooled down to room temperature (approximately 20 °C to 30 °C).

Note

Measured value close to critical value

If the measured value is close to the critical value, the insulation resistance should be subsequently checked at suitably regular intervals.

Values apply for measurement at a winding temperature of 25 °C.

8.4 Switching on and switching off

Note

EMERGENCY OFF

To avoid accidents, be familiar to the EMERGENCY OFF function before you switch on the system.

The motor is switched on and off using the converter. Read about this topic in the converter operating instructions.

Prerequisites

- Ensure that the converter is correctly parameterized.
- Use the appropriate commissioning tools.

Switching on

1. Switch on the motor by the converter.
2. Ensure smooth motor operation.
3. Check the function of the motor cooling system.
4. Check the function of the safety equipment.
5. Check whether the motor reaches the required parameters.

Switching off

1. Switch off the motor by the converter.

After you complete the operation, the motor has been commissioned.

Operation 9

Note

EMERGENCY OFF

To avoid accidents, be familiar with the EMERGENCY OFF function before you switch on the system.

Switching on

⚠ WARNING

Danger to life caused by the machine movement and loose objects

Machine movement and loose objects, which can fall or are flung out, can cause severe injury.

- Ensure that the machine has been completely installed and all of the setting work completed.
- Ensure that nobody is at hazard area when you switch on the machine.
- Before switching on, check that there are no loose objects in or on the motor that can fall or can be flung off.

The motor is switched on by the converter. Read about this topic in the converter operating instructions.

Operation

While the motor is operational, ensure that the specified parameters are maintained:

- The current drawn is in the specified range.
- Cooling is ensured.

  Check that the heat can be dissipated unobstructed.
- There are no abnormal motor noises.
- The motor does not overheat.
- If available, the sealing air intake functions.

NOTICE

Motor damage caused by worn bearings

Worn bearings cause motor damage.

- Always comply with the bearing change intervals depending on the operating state.

Switching off

The motor is switched off by the converter. Read about this topic in the converter operating instructions.

9.1 Faults

⚠ WARNING

Injuries caused by the drive system as a result of ineffective protective devices

Injuries can be caused if protective devices are deactivated while troubleshooting.

- Only operate the drive system with functioning protective devices.

Note

Damage to the machine caused by faults

- Correct the fault as the cause specified in the remedial measures section.
- Repair any damage to the machine/motor.

Note

When faults occur, observe the description in SINUMERIK 808D ADVANCED Commissioning Manual.

If changes occur with respect to normal operation or faults, proceed as follows:

- Determine the cause using the "Possible faults" table.
- If you have identified the cause, attempt to resolve the fault using the "Code to causes of faults and remedial measures" table.
- In this regard, observe the relevant chapter in the documentation associated with the components of the complete drive system.

Possible faults

Fault	Cause of fault (see the code table)																		
Motor failing to start	A	B			E														
Motor starting slowly	A		C		E	F													
Rumbling noise when starting			C		E	F													
Rumbling noise in operation	A		C		E	F													
High temperature rise under no load operation				D					I										
High temperature rise under load	A		C						I										
High temperature rise of individual winding sections					E	F													
Uneven running										J	K								
Grinding sound, running noise												L							
Radial vibration													M	N	O	P		R	
Axial vibration															O		Q	R	

Code to causes of faults and remedial measures

Code	Cause of fault	Remedial measures
A	Overload	Reduce load
B	Interrupted phase in the supply cable/motor winding	Check the converter and supply cables/measure the winding resistances and insulation resistances, repair after consultation with manufacturer
C	Interrupted phase in the feeder cable after switching on	Check the converter and supply cables/check the winding resistances
D	Converter output voltage too high, frequency too low	Check the converter settings, perform automatic motor identification
F	Winding short circuit or phase short circuit in stator winding	Measure the winding resistances and insulation resistances, repair after consultation with manufacturer
E	Stator winding incorrectly connected	Check winding connection
I	Heat dissipation obstructed by deposits	Clean the drive surfaces. Ensure that the cooling air can flow in and out unimpeded
	Cooling air inlet/outlet is blocked by foreign bodies	Remove the blockage. Ensure that the cooling air can flow in and out unimpeded
	Fan motor does not start	Check the function of the fan motor
J	Insufficient shielding for motor and/or encoder cable	Check the shielding and grounding
K	Drive controller gain too high	Adjust the controller
L	Rotating parts are grinding	Determine cause and adjust parts concerned
	Foreign bodies in the motor	Send to manufacturer for repair
	Bearing damage	Send to manufacturer for repair
M	Rotor not balanced	Decouple rotor and rebalance
N	Rotor out of true, shaft bent	Consult the manufacturer
O	Poor alignment	Align machine set, check coupling
P	Coupled machine not balanced	Rebalance coupled machine
Q	Mechanical shocks from coupled machine	Inspect coupled machine
R	Uneven gearbox operation	Repair the gearbox

If the fault still cannot be resolved after applying the measures specified above, contact the manufacturer or Siemens Service Center.

9.2 Non-operational periods

NOTICE
Damage due to improper storage The motor can be damaged if it is not stored properly. • If the motor is not operational for longer periods of time, preserve it by using anti-corrosion protection and ensure that it remains dry (for example, appropriate drying agents).

Measures for long non-operational periods:

- If the motor is not operational for extended periods of time, run it at regular intervals (roughly once a month) or spin the rotor by hand.
- When recommissioning after longer non-operational periods of the motor, perform the checks and measures listed in Chapter, "Commissioning (Page 89)".
- Before switching on to commission the drive, carefully read the Section "Switching on" in the Chapter "Switching on and switching off (Page 94)".

Maintenance 10

CAUTION

Risk of injury through contact with cleaning agents and solvents

Contact with cleaning agents and solvents can cause chemical burns and irritate the skin and mucous membranes.

- Carefully observe all of the safety and application notes provided on the packaging of the cleaning agents and solvents.
- Ensure that any vapors that are released are drawn out and that the work area is well ventilated.
- Use the appropriate personnel protection equipment (for example, protective eyewear, gloves, respiration filter).

CAUTION

Injuries caused by blown particles

When you clean the motor using compressed air, this can stir up dusts, metal chips and cleaning agents, which can cause injury.

- When cleaning the motor with compressed air, ensure there is adequate extraction equipment.
- Use the appropriate personal protection equipment, for example, gloves, protective overall.

10.1 General inspection guidelines

The motor is not disassembled for inspection.

If you have any questions, please contact the manufacturer, informing them of the machine type and serial number.

We recommend that a Siemens Service Center carries out inspection and maintenance work. The contact data is provided in Section "Technical support" in Chapter "Introduction (Page 3)".

10.2 Maintenance and inspection intervals

General

Inspect and maintain the motor at regular intervals to be able to identify faults at an early stage and remove them.

NOTICE
Damage to the machine due to unusual conditions or faults Unusual conditions or faults of the motor, for example, overload or short circuit can result in consequential damage to the machine. • Immediately inspect the motor if faults or exceptional conditions occur.

Cleaning

Regularly clean the drive system to ensure that it is adequately cooled.

Inspection/maintenance intervals, periods, measures

The maintenance intervals depend on the operating conditions.

- Adapt the maintenance intervals to match the local conditions, such as pollution/dirt, switching frequency, and load.
- Carry out the following measures according to what is specified in the table.

Operating intervals or periods and measures

Operating intervals or periods	Measures
After 500 operating hours, after 6 months at the latest	Initial inspection
Approx. every 8000 operating hours, after 2 years at the latest Approx. every 5000 operating hours, after 2 years at the latest	General inspection Without radial shaft sealing ring With radial shaft sealing ring
Note the bearing lifetime (see Section "Bearing lifetime (Page 36)")	Replace the motor if the bearing working time exceeds the lifetime
Depending on the local degree of pollution	Clean the motor and the fan

Note

If the bearing working time exceeds its lifetime, the motor cannot be used any longer. Replace the motor with a new one.

10.3 Initial inspection

Initial inspection

Carry out an initial inspection after one of the following conditions is satisfied:

- Installation
- 500 operating hours, at the latest after 6 months
- Corrective maintenance of the motor

Note

Adapt the inspection to the plant-specific conditions.

Further tests are also necessary in line with the component documentation or corresponding to the particular system-specific conditions.

10.4 General inspection

Note

Adapt the inspection to the plant-specific conditions.

Further tests are also necessary in line with the component documentation or corresponding to the particular system-specific conditions.

Test scope

While the motor is running, check the following items:

- The electrical parameters are maintained.
- The smooth running characteristics and motor noise during operation have not changed.

When the motor is at a standstill, check the follows:

- The motor foundation has no indentations or cracks.
- The machine is aligned within in permissible tolerance ranges.
- All of the mounting bolts/screws for the mechanical and electrical connections are tight.
- The insulation resistance of windings lies in the permissible tolerance range.
- Any bearing insulation is fitted in accordance with the labeling.
- Cables and insulating parts and components are in a good condition and are not discolored.
- The permissible radial forces (transverse forces) of the roller bearings are complied with.

NOTICE

Machine damage when ignoring abnormalities identified during the inspection

Abnormalities identified during inspection that are subsequently ignored can result in machine damage.

- Analyze and remove any abnormalities identified, taking into consideration Chapters "Faults (Page 96)" and "Maintenance (Page 99)".
- Contact the Siemens Service Center if you require any support.

10.5 Spare parts - External fans

Replacement fans for 1PH1 motors

The external fan can be replaced when required.

Motor shaft height	Fan components	
	Illustration	Article number
SH100	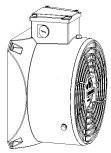	1PH1902-0AB00-0AA0
SH132	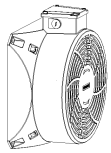	1PH1902-0AC00-0AA0

Note

The external fan can be replaced by the customers themselves or by appropriately trained Siemens service personnel.

Replacing the external fan

Before replacing the fan, proceed as follows:

1. Switch off the motor and fan.
2. Disconnect both of them from the power supply by disconnecting all phases.
3. Ensure that they both cannot be accidentally switched on again.
4. Once the voltage has been disconnected on all poles, wait for 5 minutes before touching the device.
5. Allow the motor and fan to cool down.

Proceed through the steps as illustrated below to remove the fan from the motor. To reassemble the fan, proceed in reverse order.

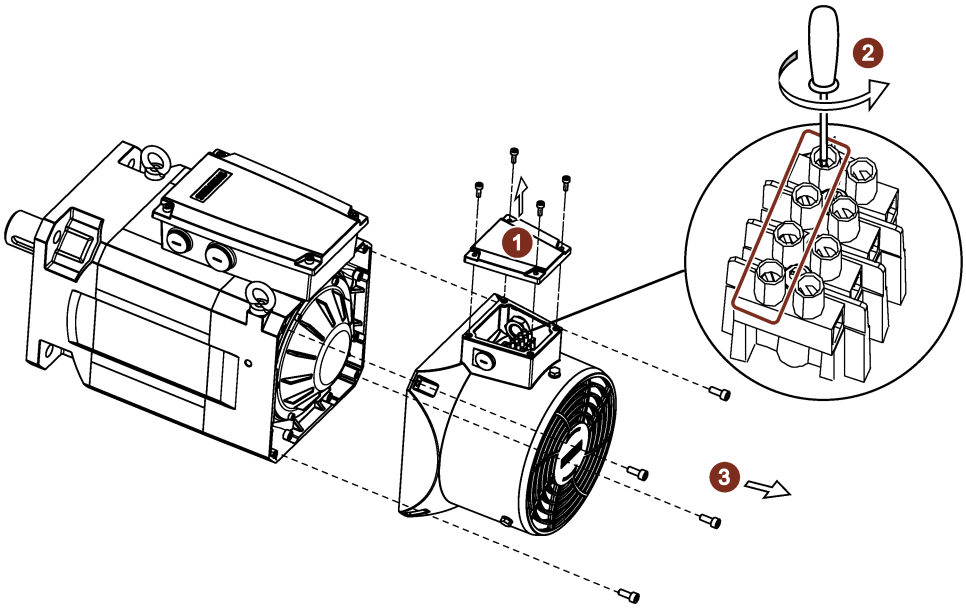

1. Open the terminal box.
2. Disconnect all terminals.
3. Part the four screws and disassemble the fan.

When you complete the replacing, proceed as follows:

1. After replacing, check the insulation resistance.
2. Check that you have re-attached any parts that were removed from replacing.
3. Reconnect the power supply.
4. Switch on the motor and fan again.

10.6 Cleaning the motor and the external fan

When you use the motor, observe the following:

- Check the degree of pollution of the motor and the fan at regular intervals.
- Clean the motor and the fan if cooling is no longer adequate.

Preparing for cleaning

WARNING

Death of severe injury as a result of rotating fan blades

When carrying out repair and maintenance work on the fan, rotating fan blades can cause severe injury.

- Switch off the fan.
- Disconnect the fan circuit and lock out the fan so that it cannot be switched on again.
- If at all possible, lock the fan blades so that they cannot rotate.

Before cleaning the fan and motor, proceed as follows:

1. Switch off the motor and fan.
2. Disconnect both of them from the power supply by disconnecting all phases.
3. Ensure that they both cannot be accidentally switched on again.
4. Once the voltage has been disconnected on all poles, wait for 5 minutes before touching the device.
5. Allow the motor and fan to cool down.
6. If at all possible, lock the fan blades so that they cannot rotate.

Cleaning

WARNING

Danger to life due to risk of explosion caused by solvents

When you use solvents, vapors are released and can explode if they come into contact with a source of ignition. The explosion can cause death or severe injury.

- Remove or extinguish all sources of ignition.
- Only use tools where sparking can be completely ruled out.
- Ensure good ventilation.

CAUTION

Risk of injury through contact with cleaning agents and solvents

Contact with cleaning agents and solvents can cause chemical burns and irritate the skin and mucous membranes.

- Carefully observe all of the safety and application notes provided on the packaging of the cleaning agents and solvents.
- Ensure that any vapors that are released are drawn out and that the work area is well ventilated.
- Use the appropriate personnel protection equipment (such as protective eyewear, gloves, respiration filter).

NOTICE

Damaged fan blades as a result of excessive force

Fan blades can be damaged if subject to excessive force.

- Avoid applying excessive force to the fan.

Note

Use a lint-free cloth or a soft brush to clean the fan blades; ensure that no moisture enters the inside of the motor.

Clean the motor and the fan with commercially available cleaning agents.

After cleaning

When you complete the cleaning, proceed as follows:

1. Allow the motor and fan to dry off.
2. After wet cleaning, check the insulation resistance.
3. If used, remove the rotation locks for the fan blades
4. Check that you have removed all cleaning equipment and cleaning agents.
5. Check that you have re-attached any parts that were removed from cleaning.
6. Reconnect the power supply.
7. Switch on the motor and fan again.

Decommissioning and disposal 11

11.1 Decommissioning

Disassembly of the motor must be carried out and/or supervised by qualified personnel with appropriate expert knowledge.

1. Contact a certified waste disposal organization in your vicinity. Clarify what is expected in terms of the quality of dismantling the motor and provision of the components.
2. You must carefully follow the safety rules as listed in Chapter "Fundamental safety instructions (Page 11)".
3. Disconnect all electrical connections.
4. Remove all liquids.
5. Remove the fixing elements from the motor.
6. Transport the motor to a suitable location for disassembly.

Observe the notes provided in Chapter "Maintenance (Page 99)". Dismantle the motor using the general motor-typical procedures.

⚠ WARNING

Death or severe injury caused by falling machine parts

The machine partially comprises heavy individual components. When removing the machine, these components can fall. This can result in death, severe injury or material damage.

- Secure the machine components that are being released so that they cannot fall.

The motors must be disposed of in accordance with national and local regulations as part of the standard recycling process or they can be returned to the manufacturer.

The encoder electronics must be properly disposed of electronic waste.

11.2 Disposal

Recycling and disposal

For environmentally-friendly recycling and disposal of your old device, please contact a company certified for the disposal of waste electrical and electronic equipment, and dispose of the old device as prescribed in the respective country of use.

Components

Sort the components for recycling according to whether they are:

- Electronics waste, for example, sensor electronics
- Iron to be recycled
- Aluminum
- Non-ferrous metal, for example, motor windings
- Insulating materials

Process material and chemicals

Sort the process materials and chemicals for recycling according to whether they are:

- Oil

  Dispose of the spent oil as special waste in accordance with the spent oil ordinance.
- Grease
- Solvents
- Cleaner solvent
- Paint residues

  Do not mix solvents, cleaner solvents and paint residues.

Insulating materials

Electrical insulation materials are mainly used in the stator. Some supplementary components are made of similar materials and must, therefore, be handled in the same manner.

The insulating materials in question are used on the following items of equipment:

- Various insulators which are used in terminals boxes
- Voltage and current transformers
- Power lines
- Instrument wiring
- Surge arrester
- Capacitors

Technical data and characteristics 12

12.1 SIMOTICS M-1PH1 main motors

12.1.1 General technical data

General technical data

Parameter	Description
Type of motor	Asynchronous motor
Cooling method	Fan-cooled
Operating temperature	-15 °C to +40 °C (without power derating)
Storage temperature	-15 °C to +55 °C
Relative humidity (short-term storage)	< 75%
Relative humidity (long-term storage)	< 60%
Relative humidity (operating)	≤ 90%
Installation altitude	≤ 1000 m (without power derating)
Maximum noise level	72 dB (A)
Thermal class	F
Vibration severity grade	1PH11□□-1□F: Grade B is maintained up to 1800 r/min; Grade S is maintained from 1800 r/min to 10000 r/min 1PH11□□-1□D: Grade B is maintained up to 1800 r/min; Grade R is maintained from 1800 r/min to 6000 r/min
Static bearing lifetime	> 20000 h [1]
Encoder lifetime	> 20000 h
Motor lifetime	20000 h
Paint finish	Anthracite
Degree of protection	IP54 (dust-tight and splash-proof during motor operation)
Type of construction	IM B5, IM B3, IM V1, and IM V5
Positive rotation	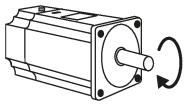 Clockwise (default setting in SINAMICS V70 spindle drives)
Certification	CE EAC

[1] This lifetime is only for reference. When a motor keeps running at rated speed under rated load, replace its bearing after 20000 hours to 30000 hours of service time. Even if the time is not reached, the bearing must be replaced when unusual noise, vibration, or faults are found.

12.1.2 Specific technical data

12.1.2.1 Shaft height 100

Article no.	1PH110...	1-1□F	3-1□F	5-1□F	3-1□D	5-1□D
Insulation class		F				
Rated power		3.7 kW	5.5 kW	7.5 kW	3.7 kW	5.5 kW
Rated torque		24 Nm	35 Nm	48 Nm	35 Nm	53 Nm
Maximum torque for 30 s		48 Nm	70 Nm	96 Nm	70 Nm	106 Nm
Overload torque (S6-25% (1.5 Pn))		36 Nm	52.5 Nm	72 Nm	52.5 Nm	79.5 Nm
Rated speed		1500 r/min	1500 r/min	1500 r/min	1000 r/min	1000 r/min
Maximum speed		10000 r/min	10000 r/min	10000 r/min	6000 r/min	6000 r/min
Rated frequency		53.3 Hz	53 Hz	52.6 Hz	36.9 Hz	36.4 Hz
Rated voltage (phase/phase)		326 V	290 V	327 V	269 V	265 V
Rated current		10.3 A	16.9 A	19.6 A	12.9 A	18.8 A
Maximum current (for maximum torque)		20.6 A	33.8 A	39.2 A	25.8 A	37.6 A
Winding resistance/stator phase resistance (20°C)		0.9682 Ω	0.4595 Ω	0.3597 Ω	0.8227 Ω	0.4557 Ω
Winding inductance/motor magnetizing inductance		97 mH	56 mH	54.5 mH	91 mH	69.5 mH
Moment of inertia		0.009 kgm^2	0.0112 kgm^2	0.015 kgm^2	0.0112 kgm^2	0.015 kgm^2
Motor weight		29 kg	36 kg	45 kg	36 kg	45 kg

12.1.2.2 Shaft height 132

Article no.	1PH113...	1-1□F	3-1□F	1-1□D	3-1□D
Insulation class		F			
Rated power		11 kW	15 kW	7.5 kW	11 kW
Rated torque		70 Nm	95.5 Nm	71.6 Nm	105 Nm
Maximum torque for 30 s		140 Nm	191 Nm	143 Nm	210 Nm
Overload torque (S6-25% (1.5 Pn))		105 Nm	143 Nm	107 Nm	158 Nm
Rated speed		1500 r/min	1500 r/min	1000 r/min	1000 r/min
Maximum speed		8000 r/min	8000 r/min	6000 r/min	6000 r/min
Rated frequency		51.5 Hz	50.8 Hz	35.2 Hz	35 Hz
Rated voltage (phase/phase)		295 V	317 V	220 V	301 V
Rated current		28.8 A	36.7 A	26.6 A	28.3 A
Maximum current (for maximum torque)		57.6 A	73.4 A	53.2 A	56.6 A
Winding resistance/stator phase resistance (20°C)		0.1977 Ω	0.1354 Ω	0.2645 Ω	0.2705 Ω
Winding inductance/motor magnetizing inductance		45.55 mH	34.7 mH	52.5 mH	69 mH
Moment of inertia		0.0547 kgm^2	0.074 kgm^2	0.0504 kgm^2	0.074 kgm^2
Motor weight		73 kg	90 kg	70 kg	90 kg

12.1.2.3 Characteristics

Note

The characteristics described in this section are generated based on the supply voltage of 3-phase 380 V AC.

Explanation of technical data abbreviations

Abbreviation	Unit	Description
n_N	r/min	Rated speed
P_N	kW	Rated power
M_N	Nm	Rated torque
I_N	A	Rated current
U_N	V	Rated voltage
f_N	Hz	Rated frequency
n_2	r/min	Maximum operating speed in a field-weakening range with the constant power
n_{max}	r/min	Maximum speed

Shaft height 100

1PH1101-1□F□:

n_N	P_N	M_N	I_N	U_N	f_N	n_2	n_{max}	$P_{S6-40\%}$	$I_{S6-40\%}$	$P_{S6-25\%}$	$I_{S6-25\%}$	$P_{S6-15\%}$	$I_{S6-15\%}$
[r/min]	[kW]	[Nm]	[A]	[V]	[Hz]	[r/min]	[r/min]	[kW]	[A]	[kW]	[A]	[kW]	[A]
1500	3.7	24	10.3	326	53.3	4300	10000	4.8	13.4	5.6	15.5	7.4	21

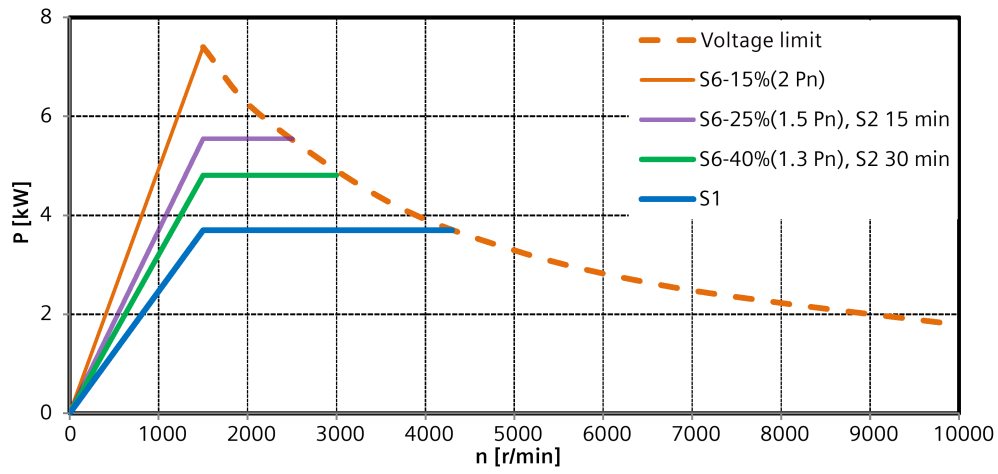

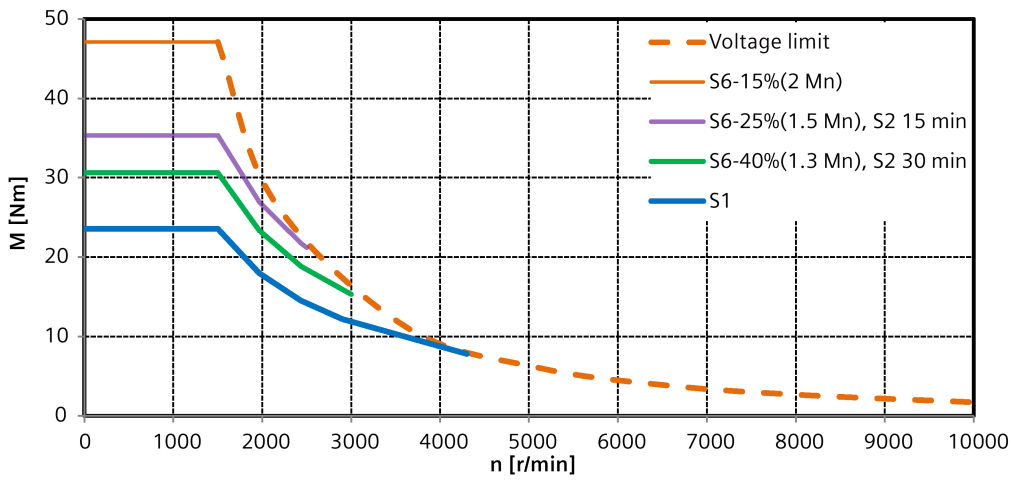

1PH1103-1□F□:

n_N	P_N	M_N	I_N	U_N	f_N	n_2	n_{max}	$P_{S6-40\%}$	$I_{S6-40\%}$	$P_{S6-25\%}$	$I_{S6-25\%}$	$P_{S6-15\%}$	$I_{S6-15\%}$
[r/min]	[kW]	[Nm]	[A]	[V]	[Hz]	[r/min]	[r/min]	[kW]	[A]	[kW]	[A]	[kW]	[A]
1500	5.5	35	16.9	290	53	5500	10000	7.2	22.0	8.3	25.4	11.0	34

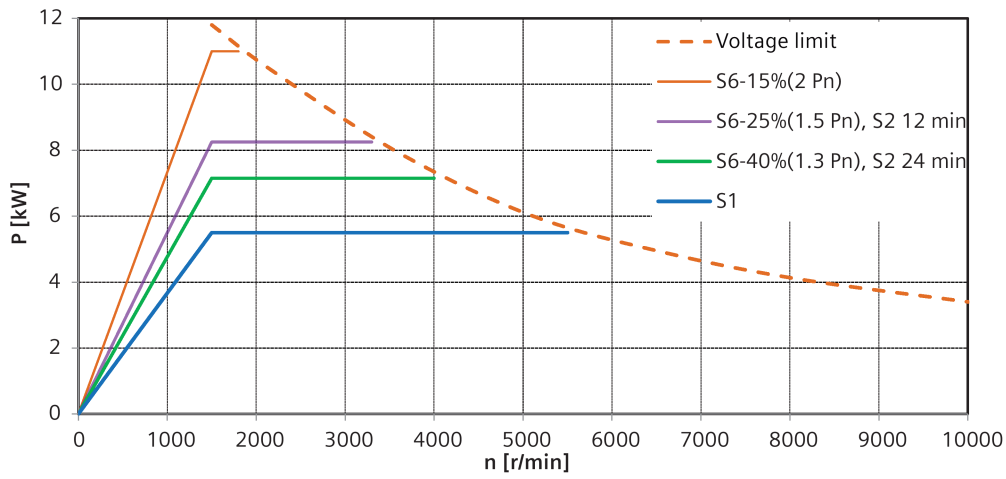

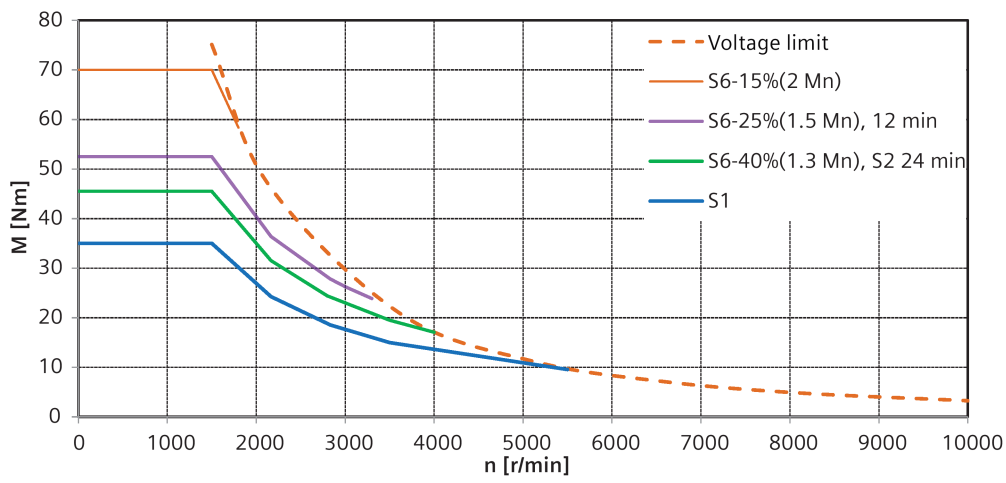

1PH1105-1□F□:

n_N	P_N	M_N	I_N	U_N	f_N	n_2	n_{max}	$P_{S6-40\%}$	$I_{S6-40\%}$	$P_{S6-25\%}$	$I_{S6-25\%}$	$P_{S6-15\%}$	$I_{S6-15\%}$
[r/min]	[kW]	[Nm]	[A]	[V]	[Hz]	[r/min]	[r/min]	[kW]	[A]	[kW]	[A]	[kW]	[A]
1500	7.5	48	19.6	327	52.6	4300	10000	9.8	25.5	11.3	29.4	15.0	39

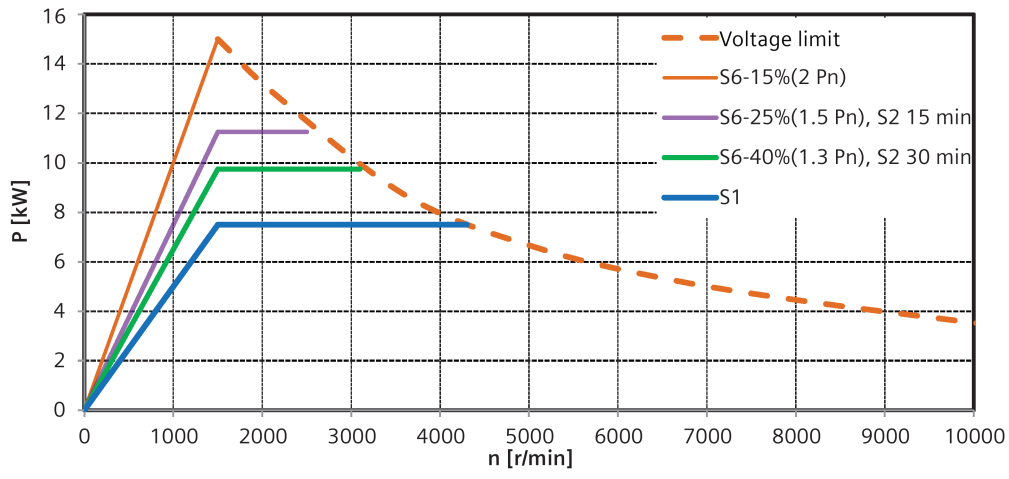

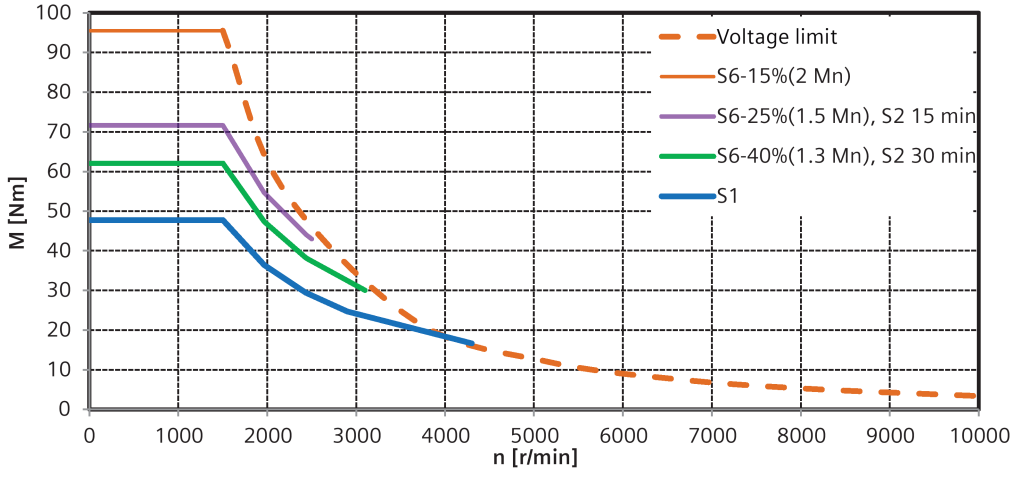

1PH1103-1□D□:

n_N	P_N	M_N	I_N	U_N	f_N	n_2	n_{max}	$P_{S6-40\%}$	$I_{S6-40\%}$	$P_{S6-25\%}$	$I_{S6-25\%}$	$P_{S6-15\%}$	$I_{S6-15\%}$
[r/min]	[kW]	[Nm]	[A]	[V]	[Hz]	[r/min]	[r/min]	[kW]	[A]	[kW]	[A]	[kW]	[A]
1000	3.7	35	12.9	269	36.9	4600	6000	4.8	16.8	5.6	19.4	7.4	26

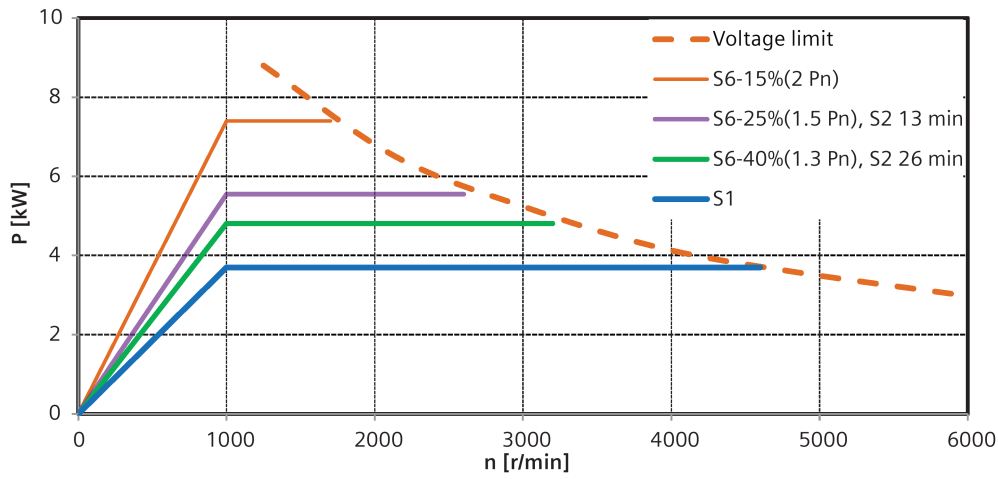

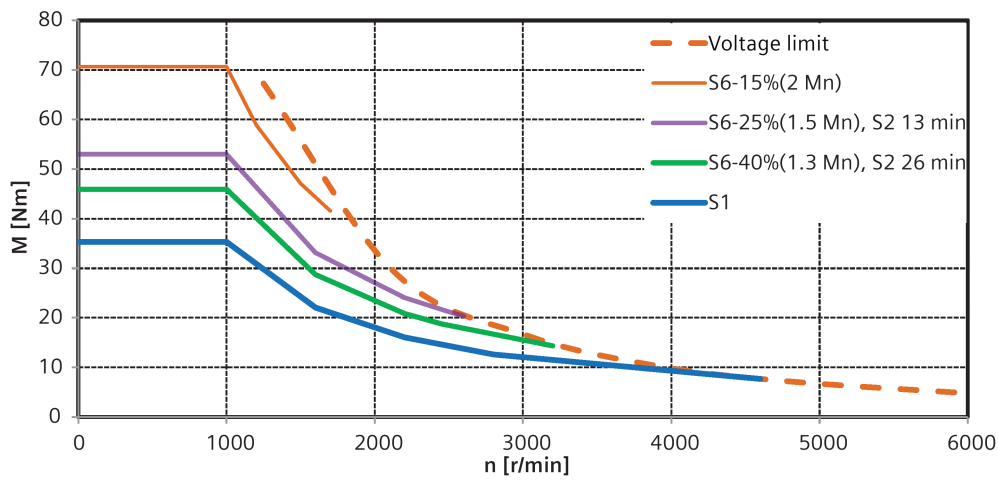

1PH1105-1□D□:

n_N	P_N	M_N	I_N	U_N	f_N	n_2	n_{max}	$P_{S6-40\%}$	$I_{S6-40\%}$	$P_{S6-25\%}$	$I_{S6-25\%}$	$P_{S6-15\%}$	$I_{S6-15\%}$
[r/min]	[kW]	[Nm]	[A]	[V]	[Hz]	[r/min]	[r/min]	[kW]	[A]	[kW]	[A]	[kW]	[A]
1000	5.5	53	18.8	265	36.4	4600	6000	7.2	24.4	8.3	28.2	11.0	38

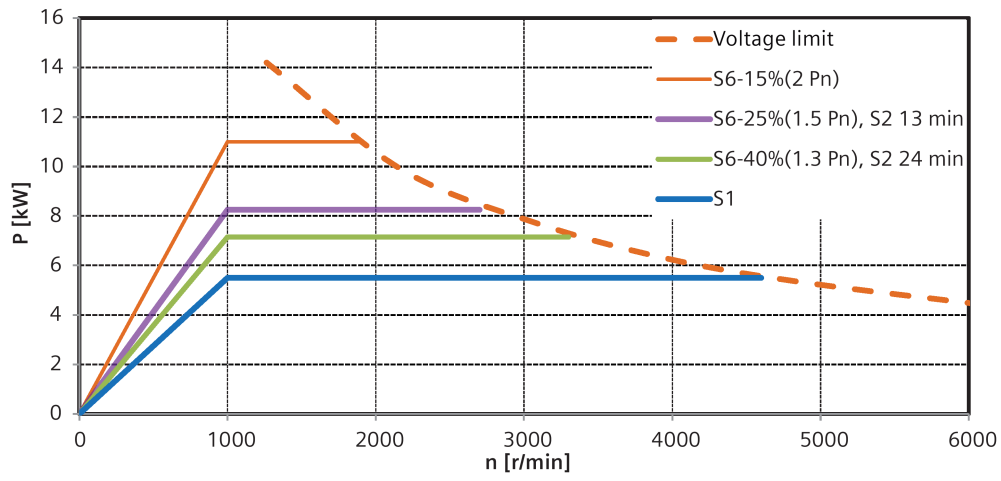

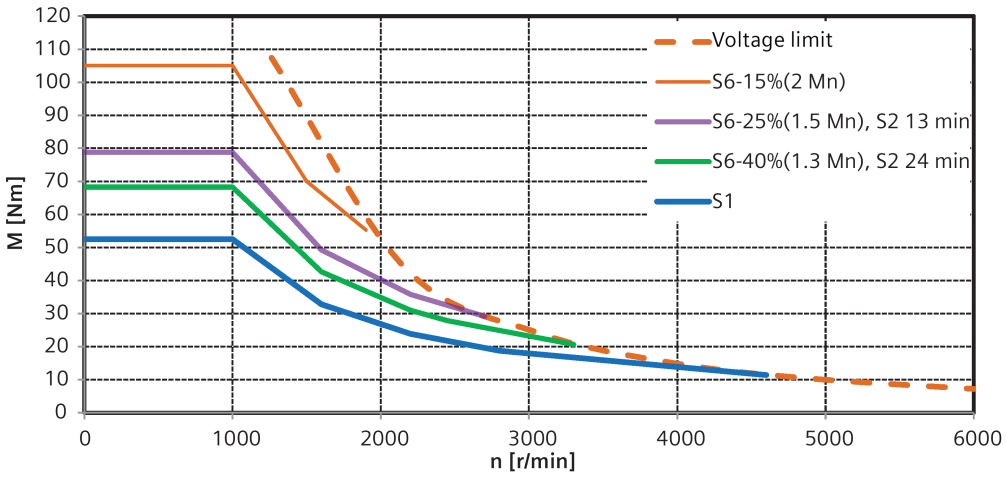

Shaft height 132

1PH1131-1□F□:

n_N	P_N	M_N	I_N	U_N	f_N	n_2	n_{max}	$P_{S6-40\%}$	$I_{S6-40\%}$	$P_{S6-25\%}$	$I_{S6-25\%}$	$P_{S6-15\%}$	$I_{S6-15\%}$
[r/min]	[kW]	[Nm]	[A]	[V]	[Hz]	[r/min]	[r/min]	[kW]	[A]	[kW]	[A]	[kW]	[A]
1500	11	70	28.8	295	51.5	5000	8000	14.3	37.4	16.5	43.2	22.0	58

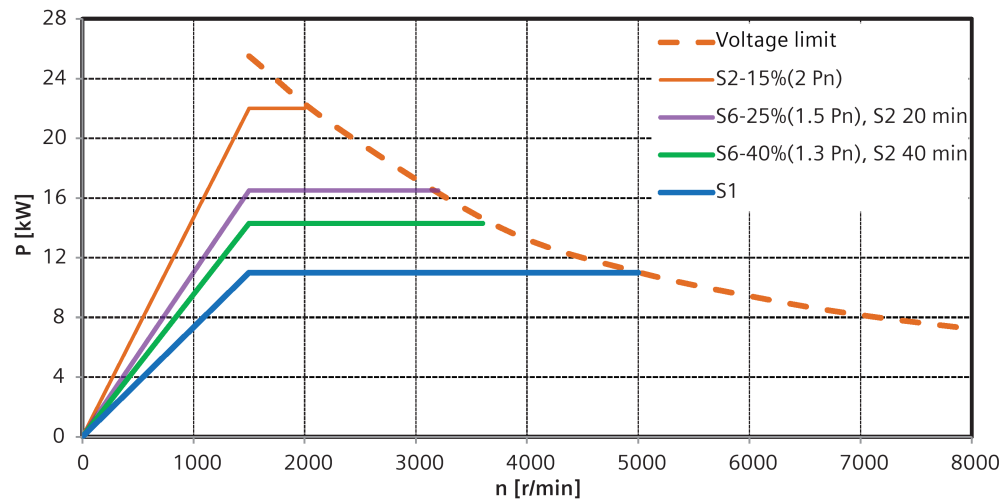

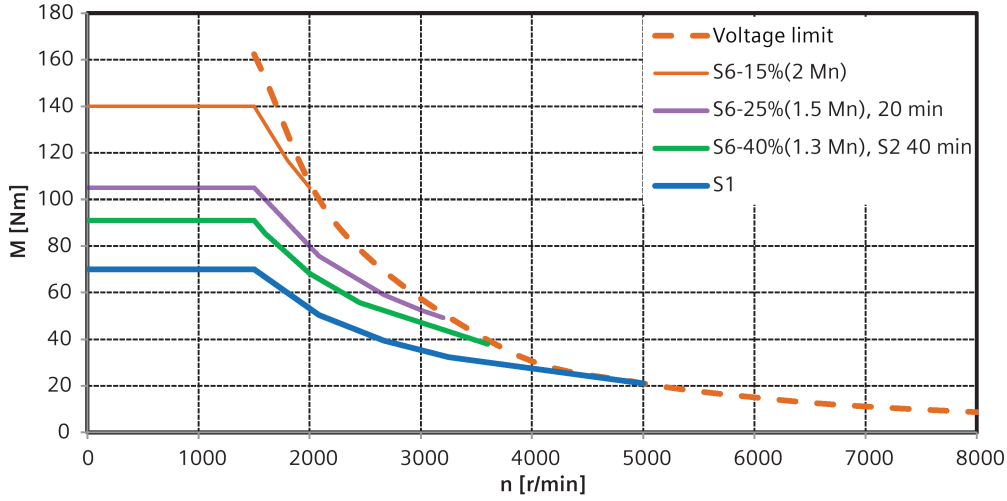

1PH1133-1□F□:

n_N	P_N	M_N	I_N	U_N	f_N	n_2	n_{max}	$P_{S6-40\%}$	$I_{S6-40\%}$	$P_{S6-25\%}$	$I_{S6-25\%}$	$P_{S6-15\%}$	$I_{S6-15\%}$
[r/min]	[kW]	[Nm]	[A]	[V]	[Hz]	[r/min]	[r/min]	[kW]	[A]	[kW]	[A]	[kW]	[A]
1500	15	95.5	36.7	317	50.8	4000	8000	19.5	47.7	22.5	55.1	30.0	73

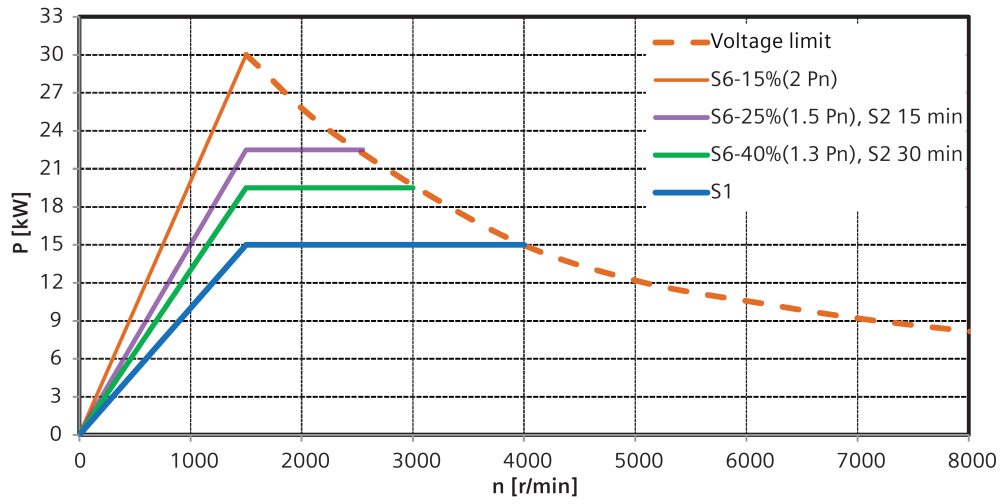

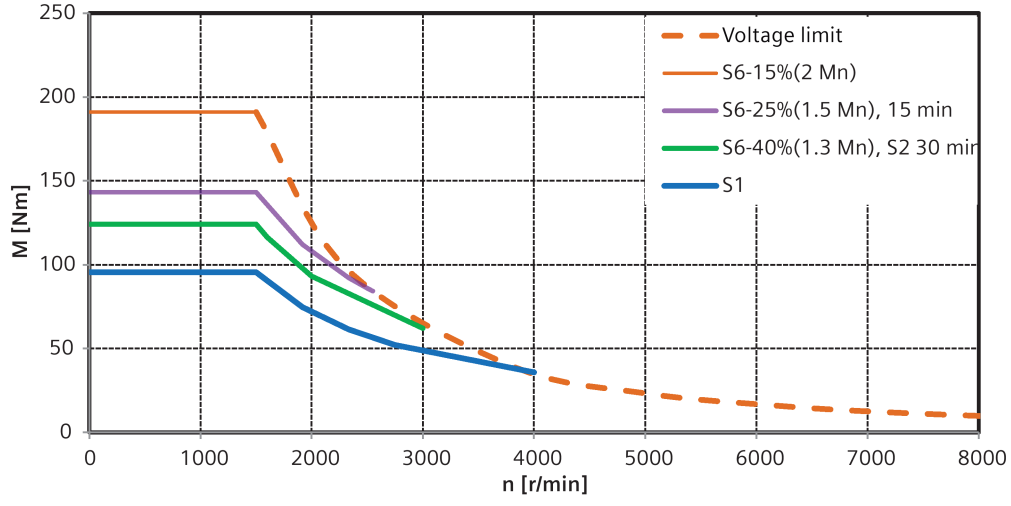

1PH1131-1□D□:

n_N	P_N	M_N	I_N	U_N	f_N	n_2	n_{max}	$P_{s6-40\%}$	$I_{s6-40\%}$	$P_{s6-25\%}$	$I_{s6-25\%}$	$P_{s6-15\%}$	$I_{s6-15\%}$
[r/min]	[kW]	[Nm]	[A]	[V]	[Hz]	[r/min]	[r/min]	[kW]	[A]	[kW]	[A]	[kW]	[A]
1000	7.5	71.6	26.6	220	35.2	5000	6000	9.8	34.6	11.3	39.9	15.0	53

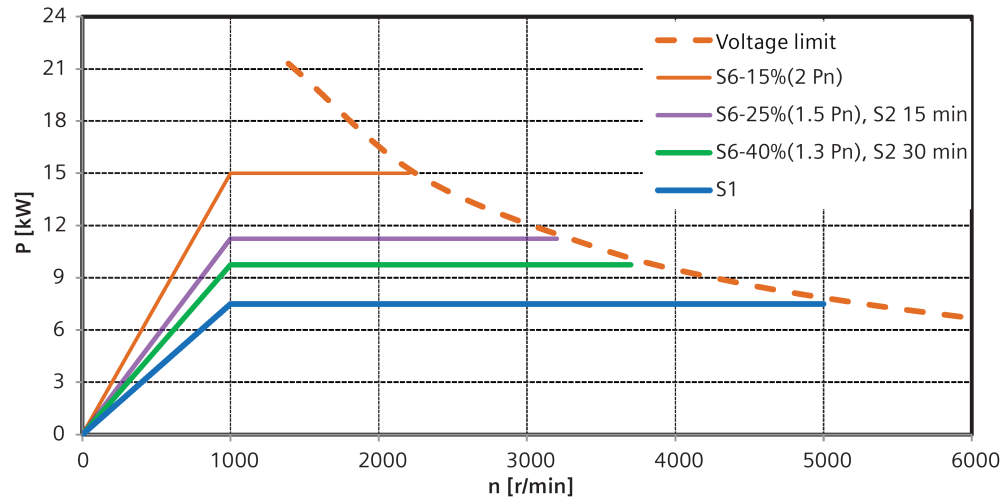

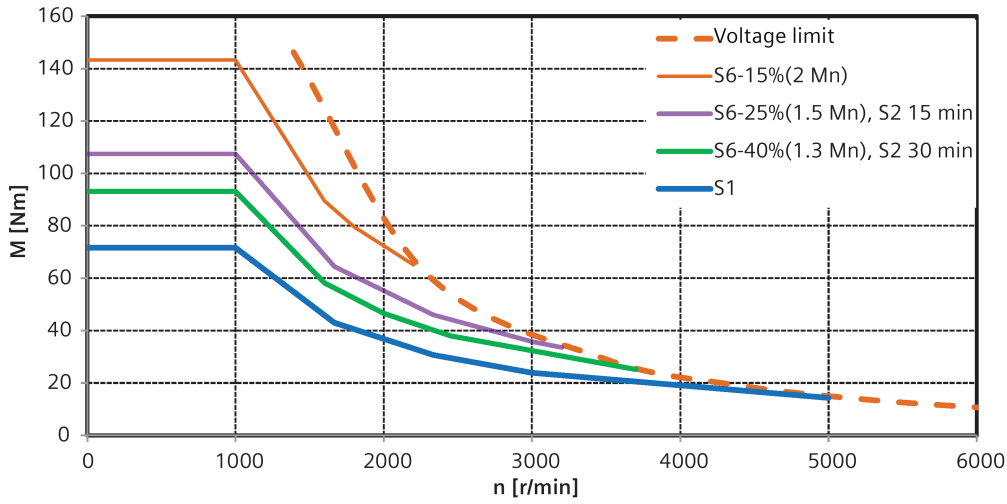

1PH1133-1□D□:

n_N	P_N	M_N	I_N	U_N	f_N	n_2	n_{max}	$P_{S6-40\%}$	$I_{S6-40\%}$	$P_{S6-25\%}$	$I_{S6-25\%}$	$P_{S6-15\%}$	$I_{S6-15\%}$
[r/min]	[kW]	[Nm]	[A]	[V]	[Hz]	[r/min]	[r/min]	[kW]	[A]	[kW]	[A]	[kW]	[A]
1000	11	105	28.3	301	35	3000	6000	14.3	36.8	16.5	42.5	22.0	57

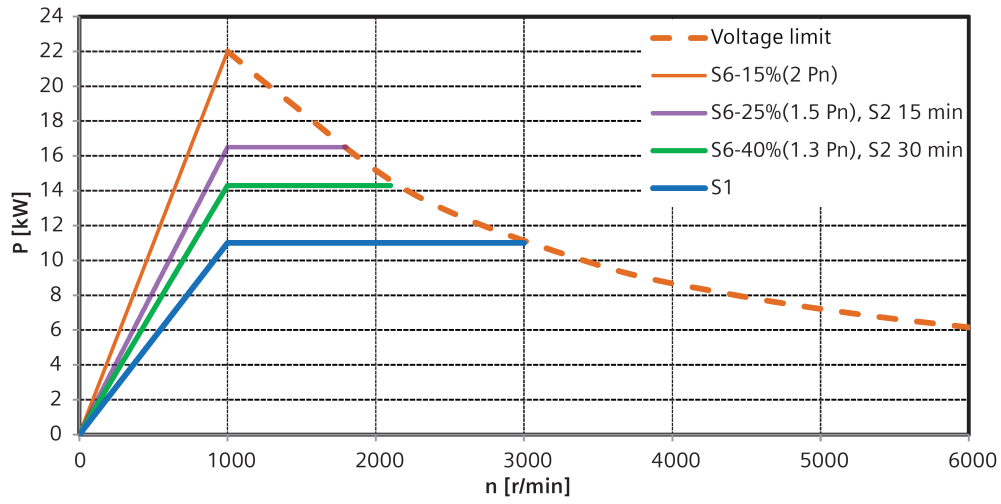

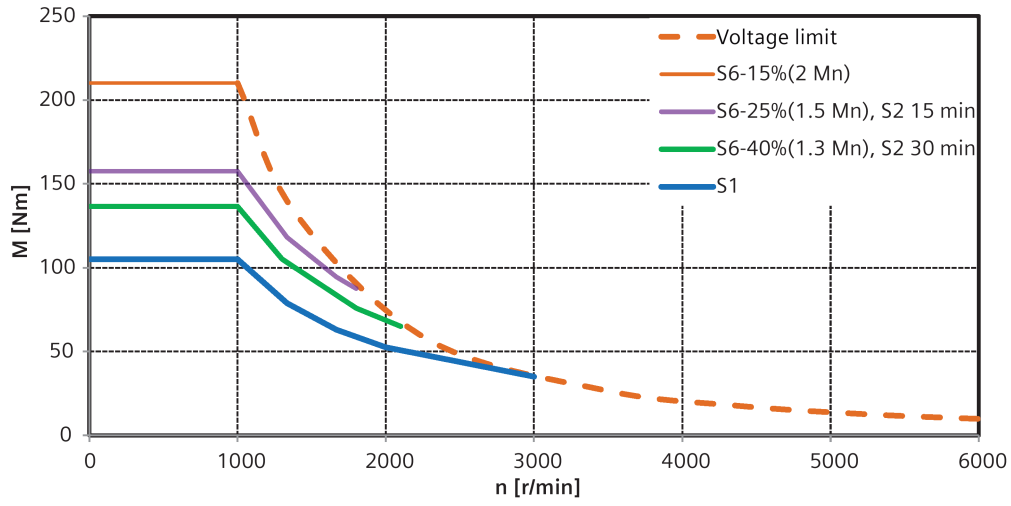

12.2 Cables for the SINAMICS V70 spindle servo system

Cables for the SINAMICS V70 spindle servo system

Parameter	MOTION-CONNECT 500 power cable	MOTION-CONNECT 300 encoder cable
Jacket material	PVC	
Degree of protection (motor-side only)	-	IP20
Number of cores	4	10
Cross-section of cores	4 × 2.5 mm^2, 4 × 4 mm^2, 4 × 10 mm^2, 4 × 16 mm^2	6 × 0.2 mm^2 + 4 × 0.25 mm^2
Operation voltage	1000 V	30 V
Operation temperature	-20 °C to 80 °C	-30 °C to 60 °C
Shielding	Yes (coverage ≥ 80%)	Yes
Minimum bending radius, static	5 × outer diameter	
Minimum bending radius, dynamic	180 mm, 210 mm, 360 mm, 440 mm	20 × outer diameter
Bending cycles	100000	
Oil resistance	DIN VDE 472-803 Part B	EN60811-2-1 fulfilled
Flame-retardant	IEC 332.1	EN60332-1-1 to 1-3 fulfilled
Certification	RoHS and CE	RoHS

12.3 Address of CE-authorized manufacturer

The CE Declaration of Conformity is held on file available to the competent authorities at the following address:

Siemens AG

Digital Factory

Motion Control

Industriestraße 1

DE-97615 Bad Neustadt a. d. Saale

Germany

Appendix A

A.1 Description of terms

Rated torque M_N

This is the torque that is mechanically available at the shaft and can be thermally provided corresponding to the specified operating mode (duty type) according to IEC 60034-1.

Rated speed n_N

This is the speed for which the rated power and rated torque are defined corresponding to the specified operating mode (duty type) according to IEC 60034-1.

Rated voltage U_N

This is the voltage between two motor phases for which the rating data (P_N, n_N, and so on) is defined. The rated voltage definition takes into account magnetic (iron saturation) and thermal factors.

Rated current I_N

This is the current (effective phase value) that flows at the rated speed and rated torque and can be thermally provided according to the specified operating mode (duty type) according to IEC 60034-1.

Rated frequency f_N

This is the frequency required for obtaining the performance ratings (P_N, n_N, and so on).

Rated power P_N

This is the power that is mechanically available at the shaft and can be thermally provided corresponding to the specified operating mode (duty type) according to IEC 60034-1.

Speed for field weakening with constant power n_2

This is the maximum achievable speed at the rated power corresponding to the specified operating mode (duty type) according to IEC 60034-1.

No-load current I_μ

This is the current (effective phase current) that is required for operating the motor under no-load conditions at the rated speed without load torque. The no-load current defines the motor magnetization in the base speed range (low speed at the start of field weakening).

Maximum speed n_{max}

This is the speed determined by mechanical factors. The maximum speed n_{max} must not be exceeded.

NOTICE
Motor damage when the maximum speed is exceeded The maximum speed n_{max} is the highest permissible operating speed and is stamped on the rating plate. The motor can be damaged if you operate it at inadmissible speeds. • Make sure that the maximum permissible speed is not exceeded. Realize this by using a suitable control system or by activating the speed monitoring function in the drive.

Maximum torque M_{max}

This is the torque that is briefly available for dynamic operations, for example, during accelerating.

Maximum current I_{max}

This is the current (effective phase value) that is produced at the rated speed and maximum torque.

S1 duty (continuous operation)

This is the operation with a constant load, the duration of which is sufficient for the motor to go into a thermally steady state.

S6 duty (intermittent operation)

This is the operation that comprises a sequence of identical duty cycles; each of these duty cycles comprises a time period with a constant motor load and a no-load time period. Unless otherwise specified, the constant-load time period refers to a duty cycle of 10 minutes.

Example:

S6-25% = 2.5 minutes of load operation, 7.5 minutes of no-load operation

A.2 Environmental compatibility

Environmental compatibility

- Environmental compatibility during development
  - When selecting third-party products, environmental compatibility is an essential criterion.
  - Special emphasis is placed on reducing the volume, mass and type variety of metal and plastic parts.
  - Effects of paint-wetting impairment substances (PWIS) need to be excluded via PWIS tests.
- Environmental compatibility during production
  - Third-party products are predominantly transported in re-usable packing. Transport for hazardous materials is not required.
  - The packing materials themselves essentially comprise paperboard containers that are in compliance with the Packaging Directive 94/62/EC.
  - Energy consumption during production needs to be optimized.
  - Production has low emission levels.
- Environmental compatibility for disposal

  Motors must be disposed in compliance with domestic and local regulations in the normal recycling process or be returned to the manufacturer.

  The following must be taken into account when you dispose the motors:
  - Disposing oil according to the regulations for disposing old oil (for example, gear oil used when a gearbox is mounted)
  - Not mixing solvents, cold cleaning agents, or remains of paint together
  - Separating the components that are to be recycled, that is, electronic scraps (encoder electronics), iron to be recycled, aluminum, and non-ferrous metals (gearwheels or motor windings)

  For more information about disposal of the motors, see Section "Disposal (Page 108)".

A.3 Assembling the power cable

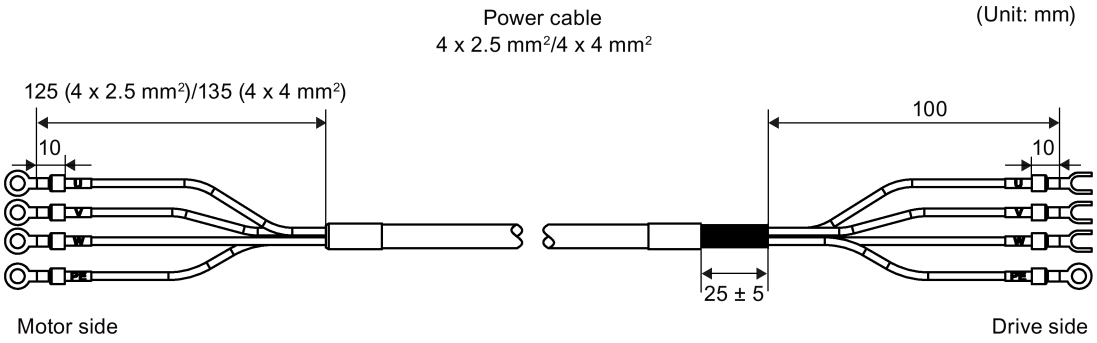

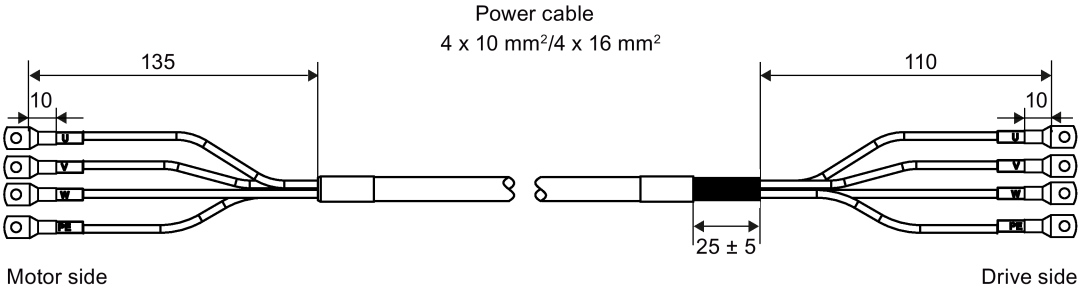

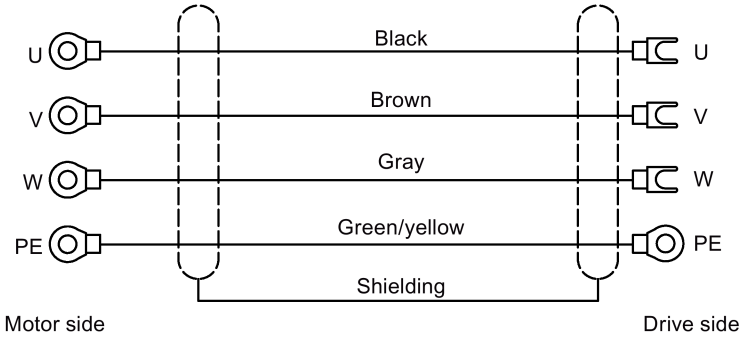

Signal definition (example)

For more information about selecting a proper power cable for the 1PH1 motor, see Section "Cables and connectors (Page 23)".

Assembling procedure

Motor side	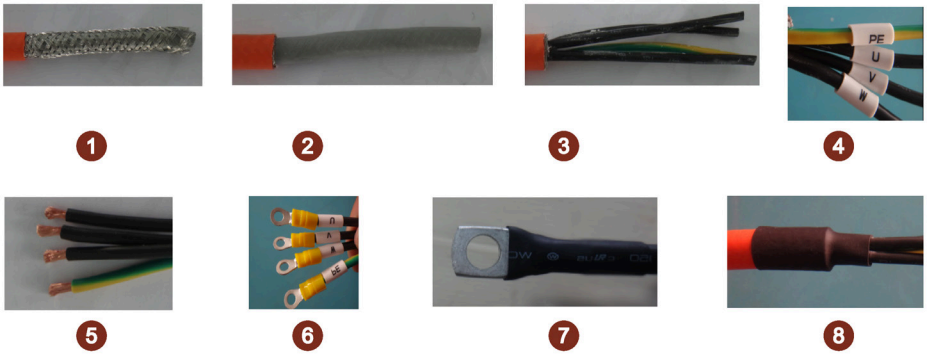 1. Strip the specified length (see below) of the outer sheath at the end of the cable. 4 x 2.5 mm² power cable: 125 mm all other power cables: 135 mm 2. Cut off the exposed braided shield in its entirety. 3. Strip the inner sheath without damage to the insulation of each cable conductor. 4. Pass white cable marker tubes through corresponding cable conductors. 5. Strip 10 mm of the insulation at the end of each cable conductor. 6. Insert cable wires into individual conductor terminals. Use a crimping tool to crimp the terminals (minimum tensile strength: 350 N). 7. (This step is necessary only for 4 x 10 mm²/4 x 16 mm² power cables. Skip this step if you assemble 4 x 2.5 mm²/4 x 4 mm² power cables.) Pass each conductor terminal through a heat-shrinkable tube, which must completely cover the bending area of the terminal. Heat the tube until it shrinks to wrap tightly around the terminal. 8. Pass all cable conductors through a heat-shrinkable tube. Heat the tube until it shrinks to wrap tightly around the cable.

Drive side	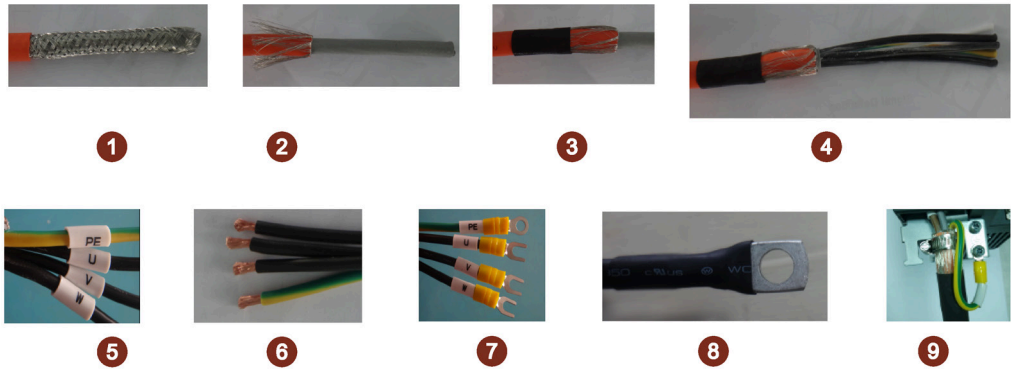 1. Strip the specified length (see below) of the outer sheath at the end of the cable. 4 x 2.5 mm²/4 x 4 mm² power cable: 100 mm 4 x 10 mm²/4 x 16 mm² power cable: 110 mm 2. Keep the exposed braided shield as long as 25 mm (± 5 mm) and cut off the rest of the shield. Fold the braided shield backwards. 3. Pass the cable through a heat-shrinkable tube. Heat the tube until it shrinks to wrap tightly around the cable. 4. Strip the inner sheath without damage to the insulation of each cable conductor. 5. Pass white cable marker tubes through corresponding cable conductors. 6. Strip 10 mm of the insulation at the end of each cable conductor. 7. Insert cable wires into individual conductor terminals. Use a crimping tool to crimp the terminals (minimum tensile strength: 350 N). 8. (This step is necessary only for 4 x 10 mm²/4 x 16 mm² power cables. Skip this step if you assemble 4 x 2.5 mm²/4 x 4 mm² power cables.) Pass each conductor terminal through a heat-shrinkable tube, which must completely cover the bending area of the terminal. Heat the tube until it shrinks to wrap tightly around the terminal. 9. Use a hose clamp to secure the power cable to the drive.

For more information about the connectors and hose clamps, such as recommended suppliers and article numbers, see Section "Cables and connectors (Page 23)".

Index

A

Applications, 20
Axial eccentricity, 42
Axial force, 39
Axial force diagrams, 41

B

Balancing instruction (general), 60
Balancing process, 43
Bearing lifetime, 36

C

Cable
    Power cable, 23
Certificates
    CE, 27
    China RoHS, 28
    EAC, 28
    EC Declaration of Conformity, 28
    RoHS, 27
    WEEE, 28
Checking the insulation resistance, 93
Checklists for commissioning, 90
Cleaning intervals, 100
Cleaning the motor and the fan, 104
Compensating coupling, 45
Concentricity, 42
Connecting-up notes, 74, 74
Cooling, 28

D

Decommissioning, 107
Degree of protection, 30, 30
Delivery
    Motor package, 21
Delivery check, 49
Disposal, 108, 125

E

Encoder, 81
Encoder grounding, 82
Encoder wiring, 82
Environmental compatibility, 125

F

Faults, 96
fN, 111

I

IN, 111
Inspection and maintenance
    General inspection, 101
    Guidlines, 99
    Initial inspection, 101

L

Lubrication
    Permanent lubrication, 36

M

Maintenance intervals, 100
Misalignment, 45
MN, 111
Motor article number, 22
Motor rating plate, 21
Mounting
    Orientation, 56
Mounting the motor
    Motor dimensions, 32

N

n2, 111
Natural frequency for mounting, 44
nmax, 111
nN, 111
Non-operational periods of the motor, 98

O

Output components, 59

P

PN, 111

R

Radial eccentricity, 42
Radial force, 37
Radial force diagrams, 40
Replacing
    Fan, 103

S

Spare part
    Fan, 102
Storage, 52

T

Technical data
    Cables for V70 spindle, 121
    Motors, 109
Technical Support
    Hotline, 5
Three-phase external fan, 69
Training, 4
Transport, 51

U

UN, 111
Use for the intended purpose, 20

V

Vibration severity limit values, 48
Vibration stressing, 46
Vibration values, 46

Siemens AG
Digital Industries
Motion Control
Postfach 31 80
91050 ERLANGEN, Germany

Scan the QR code for additional information about SIMOTICS.