Edition 02/2026

OPERATING INSTRUCTIONS

SINAMICS
SIMOTICS

S200 servo drive system

Pulse train input version (PTI)
www.siemens.com

SIEMENS

Промэлектроника, sales@prom-elec.com

SIEMENS

SINAMICS/SIMOTICS

SINAMICS S200 pulse train servo drive system with SIMOTICS S-1FL2

Operating Instructions

Pulse train input version (PTI), FW V6.5

Introduction 1

Fundamental safety instructions 2

Description 3

Application planning 4

Mounting 5

Connecting 6

Commissioning (web server) 7

Series commissioning 8

Functions 9

Tuning 10

System messages 11

Corrective maintenance 12

Technical data 13

Examples/applications 14

Appendix A

02/2026, FW V6.5

A5E51646767B AE

Legal information

Warning notice system

This manual contains notices you have to observe in order to ensure your personal safety, as well as to prevent damage to property. The notices referring to your personal safety are highlighted in the manual by a safety alert symbol, notices referring only to property damage have no safety alert symbol. These notices shown below are graded according to the degree of danger.

⚠ **DANGER**
indicates that death or severe personal injury **will** result if proper precautions are not taken.

⚠ **WARNING**
indicates that death or severe personal injury **may** result if proper precautions are not taken.

⚠ **CAUTION**
indicates that minor personal injury can result if proper precautions are not taken.

NOTICE
indicates that property damage can result if proper precautions are not taken.

If more than one degree of danger is present, the warning notice representing the highest degree of danger will be used. A notice warning of injury to persons with a safety alert symbol may also include a warning relating to property damage.

Qualified Personnel

The product/system described in this documentation may be operated only by **personnel qualified** for the specific task in accordance with the relevant documentation, in particular its warning notices and safety instructions. Qualified persons are those who, because of their training and experience, are familiar with the installation, assembly, commissioning, operation, decommissioning and disassembly of the product and can recognize risks and avoid possible hazards.

Proper use of Siemens products

Note the following:

⚠ **WARNING**
Siemens products may only be used for the application described in the catalog and the associated usage information. If products and components from other manufacturers are used, these must be recommended or approved by Siemens. Proper transport, storage, installation, assembly, commissioning, operation and maintenance are required to ensure that the products operate safely and without any problems. The permissible ambient conditions must be complied with. The information in the relevant documentation must be observed.

Trademarks

All names identified by ® are registered trademarks of Siemens Aktiengesellschaft. The remaining trademarks in this publication may be trademarks whose use by third parties for their own purposes could violate the rights of the owner.

Disclaimer of Liability

We have reviewed the contents of this publication to ensure consistency with the hardware and software described. Since variance cannot be precluded entirely, we cannot guarantee full consistency. However, the information in this publication is reviewed regularly and any necessary corrections are included in subsequent editions.

Siemens Aktiengesellschaft
Digital Industries
Postfach 48 48
90026 NÜRNBERG
GERMANY

A5E51646767B AE
Ⓟ 02/2026 Subject to change

Copyright © Siemens 2023 - 2026.
All rights reserved

Table of contents

1 Introduction ... 13

1.1 About SINAMICS ... 13

1.2 About this manual ... 14
1.2.1 Content ... 14
1.2.2 Target group ... 14
1.2.3 What's new? ... 15
1.2.4 Standard scope ... 15
1.2.5 Use of third-party products in this documentation ... 16
1.2.6 Websites of third-party companies ... 16

1.3 Product documentation ... 17

1.4 Service and Support ... 18
1.4.1 ID link and Siemens Online Support ... 18
1.4.2 Spare parts services ... 19

1.5 Important product information ... 20
1.5.1 Intended use ... 20
1.5.2 Firmware updates and constraints ... 21
1.5.3 Open-source software (OSS) ... 21
1.5.4 Compliance with the General Data Protection Regulation ... 22

2 Fundamental safety instructions ... 23

2.1 General safety instructions ... 23

2.2 Product damage due to electric fields or electrostatic discharge ... 33

2.3 Warranty and liability for application examples ... 34

2.4 Cybersecurity information ... 35

2.5 Residual risks of power drive systems ... 36

3 Description ... 39

3.1 System overview ... 39
3.1.1 Converter ... 42
3.1.2 Motor ... 43
3.1.3 MOTION-CONNECT 350 and 380 cables ... 43

3.2 Scope of delivery ... 44
3.2.1 Converter ... 44
3.2.1.1 Rating plate ... 45
3.2.1.2 Article number explanation ... 46
3.2.1.3 Serial number explanation ... 47
3.2.2 Motor ... 47
3.2.2.1 Rating plate ... 48
3.2.2.2 Article number explanation ... 50
3.2.2.3 Serial number explanation ... 51
3.2.3 MOTION-CONNECT 350 and 380 cables ... 53

3.2.3.1 Overview ... 53
3.2.3.2 Article number explanation ... 54

3.3 Device combinations ... 55
3.3.1 200 V servo drive system ... 55
3.3.2 400 V servo drive system ... 56

3.4 Accessories ... 58
3.4.1 Connector kits ... 58
3.4.2 Cables and connectors ... 59
3.4.2.1 MOTION-CONNECT cables and connectors ... 59
3.4.2.2 Setpoint cables and connectors ... 63
3.4.2.3 RJ45 connectors ... 63
3.4.3 Line filters ... 64
3.4.3.1 Technical data ... 65
3.4.3.2 Dimension drawing ... 66
3.4.3.3 Mounting instructions for the line filter ... 70
3.4.4 External 24 V DC power supply ... 71
3.4.5 Replacement fans ... 72
3.4.6 Shield plate kit ... 73
3.4.7 IP65 degree of protection kit for 1FL2 motors SH20 and SH30 ... 74
3.4.8 Memory card ... 75
3.4.9 SINAMICS Smart Adapter ... 76
3.4.10 SINAMICS SDI Pro 5.5" ... 77

3.5 Directives and standards ... 78
3.5.1 Directives and standards for the converter ... 78
3.5.2 Directives and standards for the motor ... 80
3.5.3 Directives and standards for the MOTION-CONNECT cable ... 82

3.6 Device disposal ... 83

4 Application planning ... 85

4.1 Protection against the spread of fire ... 85

4.2 Fault protection for the motor circuit ... 86

4.3 Permissible mains supply network configurations for motors ... 87

4.4 Line connection conditions for the converter with the motor 1FL2 ... 88

4.5 Removing the screw for functional grounding when operated on IT line system ... 89

4.6 Minimum cross-section of the protective conductors ... 91

4.7 Configuring the braking resistor ... 93
4.7.1 Internal braking resistor ... 93
4.7.2 External braking resistor ... 93
4.7.2.1 Overview ... 93
4.7.2.2 Selection and calculation ... 95
4.7.2.3 Recommended data of external braking resistors ... 98

4.8 Electromagnetic compatibility (EMC) ... 99
4.8.1 Electromagnetic compatibility (EMC) ... 99
4.8.2 Harmonic current emissions ... 99
4.8.3 EMC limit values in South Korea ... 100

4.9 EMC-compliant installation ... 101

4.9.1 Shielded cables for the converter ... 101
4.9.2 Achievable EMC category ... 102

5 Mounting ... 103

5.1 Converter ... 103
5.1.1 Mounting instructions for the converter ... 103
5.1.2 Mounting position ... 104
5.1.3 Dimension drawings and drilling dimensions ... 105
5.1.3.1 Dimension drawing and drilling dimensions for the 200 V converter ... 105
5.1.3.2 Dimension drawing and drilling dimensions for the 400 V converter ... 106
5.1.4 Minimum clearances ... 106

5.2 Motor ... 108
5.2.1 Transporting and lifting ... 108
5.2.2 Checklist prior to mounting ... 111
5.2.3 Safety labels on the motor ... 111
5.2.4 Mounting instructions for the motor ... 112
5.2.5 Mounting position ... 114
5.2.6 Dimension drawings for motors ... 115
5.2.6.1 Dimension drawing for the 1FL2 motor, shaft height 20 ... 115
5.2.6.2 Dimension drawing for the 1FL2 motor, shaft height 30 ... 116
5.2.6.3 Dimension drawing for the 1FL2 motor, shaft height 40 ... 117
5.2.6.4 Dimension drawing for the 1FL2 motor, shaft height 40 (New) ... 118
5.2.6.5 Dimension drawing for the 1FL2 motor, shaft height 45 ... 119
5.2.6.6 Dimension drawing for the 1FL2 motor, shaft height 48 ... 120
5.2.6.7 Dimension drawing for the 1FL2 motor, shaft height 52 ... 121
5.2.6.8 Dimension drawing for the 1FL2 motor, shaft height 65 ... 122
5.2.6.9 Dimension drawing for the 1FL2 motor, shaft height 90 ... 123
5.2.7 Mounting the feather key ... 124
5.2.8 Attaching output elements ... 125
5.2.9 Laying cables in cable carriers (for MOTION-CONNECT 380 only) ... 128

6 Connecting ... 131

6.1 System connection ... 132

6.2 Overview of the converter interfaces ... 133

6.3 Cables and connectors ... 134
6.3.1 Maximum permissible cable lengths ... 134
6.3.2 Conductor cross-sections and cable lugs ... 134

6.4 Connecting the mains supply ... 136
6.4.1 Interface description - X1 ... 136
6.4.2 Wiring ... 136
6.4.3 Using several single-phase converters in machines and plants ... 137

6.5 Connecting the motor ... 139
6.5.1 Routing cables in damp environments ... 139
6.5.2 Connecting the motor power interface ... 139
6.5.2.1 Interface description - X2 (converter side) ... 139
6.5.2.2 Interface description - power connector (motor side) ... 140
6.5.2.3 Wiring ... 142
6.5.3 Connecting the motor holding brake ... 143
6.5.3.1 Interface description (converter side) ... 143
6.5.3.2 Interface description (motor side) ... 143

6.5.3.3 Wiring ... 144
6.5.4 Connecting the encoder ... 147
6.5.4.1 Interface description - X120 (converter side) ... 147
6.5.4.2 Interface description (motor side) ... 148
6.5.4.3 Wiring ... 150
6.5.5 Rotating the connectors at the motor ... 151

6.6 Connecting the braking resistor ... 154
6.6.1 Interface description - X1 ... 154
6.6.2 Wiring ... 154

6.7 Connecting the 24 V DC power supply ... 157
6.7.1 Interface description - X124 ... 157
6.7.2 Wiring ... 157

6.8 Connecting the inputs and outputs ... 159
6.8.1 Interface description - X132 ... 159
6.8.2 Wiring ... 161
6.8.2.1 Wiring of digital inputs ... 161
6.8.2.2 Wiring of digital outputs ... 162
6.8.2.3 Wiring of analog inputs ... 164
6.8.2.4 Wiring of analog outputs ... 166
6.8.2.5 Wiring of pulse train inputs ... 166
6.8.2.6 Wiring of pulse train outputs ... 168
6.8.2.7 Connection examples with SIMATIC S7-1200 ... 169

6.9 Connecting STO (for S200 PTI only) ... 173
6.9.1 Interface description - X131 ... 173
6.9.2 Wiring ... 173

6.10 Connecting the service interface (Ethernet) ... 177

7 Commissioning (web server) ... 179

7.1 Introduction ... 179

7.2 Fundamentals ... 180
7.2.1 Requirements for commissioning ... 180
7.2.2 Supported operating units ... 180
7.2.3 Supported browsers ... 181
7.2.4 Communications interface ... 181

7.3 Getting started ... 182
7.3.1 Settings for brand-new converters ... 182
7.3.2 Calling the web server ... 182
7.3.3 Basic settings ... 183
7.3.4 Security settings ... 183
7.3.5 Home page ... 185
7.3.6 Making the operating instructions available for the web server information system ... 187
7.3.7 Using the web server information system ... 188
7.3.8 Reloading pages ... 191

7.4 Functions and menus ... 192
7.4.1 Commissioning ... 192
7.4.1.1 Complete commissioning workflow ... 192
7.4.1.2 Commissioning ... 194
7.4.1.3 Optimization ... 199

7.4.1.4 Testing the converter configuration ... 201
7.4.1.5 Safety Integrated commissioning (for S200 PTI only) ... 202
7.4.2 Monitoring and operation ... 204
7.4.2.1 Drive status ... 204
7.4.2.2 Inputs/outputs ... 206
7.4.3 Diagnostics ... 207
7.4.3.1 Messages ... 207
7.4.3.2 Diagnostics buffer ... 209
7.4.3.3 Safety Integrated (for S200 PTI only) ... 210
7.4.3.4 Connection overview ... 211
7.4.3.5 Communication ... 212
7.4.3.6 Status word and control word ... 213
7.4.4 Parameters ... 215
7.4.4.1 Parameter lists ... 215
7.4.4.2 User-defined parameter list ... 217
7.4.5 Backup and restore ... 217
7.4.6 System ... 219
7.4.6.1 Settings ... 219
7.4.6.2 User management ... 221
7.4.6.3 Protection & Security ... 222
7.4.6.4 Licenses ... 224
7.4.6.5 Firmware update ... 226
7.4.6.6 About web server ... 226
7.4.7 Support ... 227
7.4.8 Control panel ... 229

8 Series commissioning ... 231

8.1 Series commissioning ... 231

8.2 Series commissioning with memory card ... 232

8.3 Series commissioning using a commissioning tool ... 233

9 Functions ... 235

9.1 Overview of the functions ... 235

9.2 Compound controls ... 236

9.3 Inputs/outputs ... 237
9.3.1 Digital inputs ... 237
9.3.2 Digital outputs ... 241
9.3.3 Analog inputs ... 243
9.3.4 Analog outputs ... 245

9.4 Modbus communication ... 247
9.4.1 Modbus RTU message frame ... 247
9.4.2 Supported function codes ... 248
9.4.3 Available registers ... 249
9.4.3.1 Registers for process data ... 250
9.4.3.2 Control word 1 ... 251
9.4.3.3 Status word 1 ... 253
9.4.3.4 Registers for parameter data ... 254
9.4.4 Cyclic communication ... 258
9.4.5 Acyclic communication ... 263
9.4.5.1 Reading parameter values ... 264

9.4.5.2 Changing parameter values ... 268
9.4.5.3 Error values for read and change requests ... 273

9.5 General functions ... 275
9.5.1 Servo-on ... 275
9.5.2 Over-travel ... 277
9.5.3 Stopping methods at servo-off ... 279
9.5.4 Power failure detection (for S200 PTI only) ... 280
9.5.5 Vertical axis ... 280
9.5.5.1 Vertical axis ... 280
9.5.5.2 Setting SS1 in conjunction with vertical axes ... 281
9.5.6 PTO function ... 283
9.5.7 Setting motor overload protection in accordance with UL 61800-5-1 Ed.2 ... 287

9.6 Fast position control with pulse train input (Fast PTI) ... 289
9.6.1 Sequence of SON ... 289
9.6.2 Selecting a setpoint pulse train input channel ... 289
9.6.3 Selecting a setpoint pulse train input form ... 290
9.6.4 Position monitoring function ... 291
9.6.5 Smoothing function ... 295
9.6.6 Electronic gear ratio ... 296
9.6.7 Inhibiting pulse train input setpoint (P-TRG) ... 299
9.6.8 Clearing droop pulses (CLR) ... 299
9.6.9 Speed limit ... 301
9.6.10 Torque limit ... 303
9.6.11 Torque overload monitoring ... 305

9.7 Speed control (S) (for S200 PTI only) ... 306
9.7.1 Speed setpoint ... 306
9.7.2 Direction and stop ... 307
9.7.3 Speed limit ... 308
9.7.4 Speed reached monitoring ... 310
9.7.5 Torque limit ... 311
9.7.6 Torque overload monitoring ... 313
9.7.7 Zero speed clamp ... 314
9.7.8 Ramp-function generator ... 314

9.8 Torque control (T) (for S200 PTI only) ... 318
9.8.1 Torque setpoint ... 318
9.8.2 Direction and stop ... 319
9.8.3 Speed limit ... 320
9.8.4 Torque limit ... 322
9.8.5 Torque overload monitoring ... 324
9.8.6 Protective speed limit ... 325

9.9 Safety Integrated (for S200 PTI only) ... 328
9.9.1 Machinery Directive ... 328
9.9.2 Functional safety ... 328
9.9.3 Safety Integrated Functions ... 329
9.9.4 Certification ... 332
9.9.5 PFH values ... 333
9.9.6 Usage time ... 333
9.9.7 Stop functions ... 334
9.9.7.1 Safe Torque Off (STO) ... 334
9.9.7.2 Safe Stop 1 (SS1) ... 336

9.9.7.3 Safe Stop 1 with time control (SS1-t) ... 337
9.9.7.4 Functional features of Safety Integrated Functions ... 339
9.9.7.5 Selection of the Safety Integrated Functions ... 339
9.9.7.6 Control via terminals ... 340
9.9.7.7 Checksums of Safety Integrated Functions ... 340
9.9.7.8 Discrepancy time ... 341
9.9.7.9 Input filter ... 341
9.9.7.10 Self-test of the fail-safe digital input (F-DI) ... 342
9.9.8 Acceptance - completion of commissioning ... 344
9.9.9 Acceptance after series commissioning ... 345
9.9.10 Acceptance after a component has been replaced ... 345
9.9.11 Responses to safety messages ... 347
9.9.11.1 Stop responses ... 347
9.9.11.2 Fail-safe acknowledgement of safety messages ... 347
9.9.12 Response time ... 348

10 Tuning ... 349

10.1 Tuning workflow ... 349

10.2 Autotuning ... 350
10.2.1 One Button Tuning ... 351
10.2.2 Real Time Tuning (Online Tuning) ... 354

10.3 Manual tuning ... 357
10.3.1 Control loops ... 357
10.3.2 Servo gain adjustment ... 359

10.4 Gain switching ... 360

10.5 PI/P switching ... 363

10.6 Resonance suppression ... 367

11 System messages ... 371

11.1 SDI Status ... 371
11.1.1 SDI Status overview ... 371
11.1.2 Status display via LEDs ... 372
11.1.3 SDI Status display ... 375
11.1.4 Function buttons ... 377

11.2 System runtime ... 378

11.3 Faults and alarms ... 379
11.3.1 Overview of faults and alarms ... 379
11.3.2 Faults ... 380
11.3.3 Alarms ... 381
11.3.4 Explanation of the list of faults and alarms ... 381
11.3.5 List of fault codes and alarm codes ... 388

12 Corrective maintenance ... 531

12.1 Service and maintenance for the converter ... 531
12.1.1 Restoring the converter to factory settings ... 531
12.1.1.1 Restoring factory settings via a commissioning tool ... 531
12.1.1.2 Full reset of all device settings ... 531
12.1.1.3 Restore Safety Integrated to factory settings ... 533
12.1.2 Converter firmware update ... 534

12.1.2.1 Overview of firmware update ... 534
12.1.2.2 Firmware update via a memory card ... 534
12.1.2.3 BIOS update via a memory card ... 536
12.1.3 Backing up and restoring drive data ... 538
12.1.3.1 Automatically backing up drive data using a memory card and restoring this data ... 538
12.1.3.2 Backing up drive data to the backup file ... 539
12.1.3.3 Saving backup file to memory card ... 540
12.1.3.4 Restoring drive data from a backup file ... 541
12.1.3.5 Backup file with drive data encryption ... 543
12.1.4 Replacing the converter ... 545
12.1.5 Forming the DC link capacitors ... 547

12.2 Service and maintenance for the motor ... 549
12.2.1 Replacing the motor bearings ... 551
12.2.2 Replacing the motor ... 552

12.3 Service and maintenance for spare parts ... 554
12.3.1 Spare parts and spare parts compatibility ... 554
12.3.2 Replacing the fan unit (400 V converters FSC and FSD only) ... 554

12.4 Safety Integrated acceptance test after component replacement ... 557

13 Technical data ... 559

13.1 Technical data of the converter ... 559
13.1.1 Permissible environmental conditions for the converter ... 559
13.1.2 General technical data ... 560
13.1.3 Specific data of the 200 V converters ... 563
13.1.4 Specific data of the 400 V converters ... 564
13.1.5 Overload capacity ... 566
13.1.6 Power derating as a function of the installation altitude and ambient temperature ... 568
13.1.7 Protection of persons from electromagnetic fields ... 568

13.2 Technical data of the motor ... 570
13.2.1 Permissible environmental conditions for the motor ... 570
13.2.2 General technical data ... 572
13.2.3 Protection against electromagnetic fields (motor) ... 573
13.2.4 Cooling ... 573
13.2.5 Derating factors ... 575
13.2.6 Degree of protection ... 577
13.2.7 Balancing ... 579
13.2.8 Vibrational behavior ... 579
13.2.9 Shaft extension ... 580
13.2.10 Radial eccentricity, concentricity, and axial eccentricity ... 581
13.2.11 Axial and radial forces ... 583
13.2.11.1 Permissible axial forces ... 583
13.2.11.2 Permissible radial forces ... 583
13.2.12 Available encoders ... 590
13.2.13 Brake data ... 590
13.2.13.1 Overview of the 1FL2 holding brake ... 590
13.2.13.2 Technical data of the 1FL2 holding brake ... 591
13.2.14 Technical data and characteristics of the 1FL2 ... 592
13.2.14.1 1FL2102-2AG connected to 1 AC 200 V/3 AC 220 V ... 592
13.2.14.2 1FL2102-4AG connected to 1 AC 200 V/3 AC 220 V ... 594
13.2.14.3 1FL2103-2AG connected to 1 AC 200 V/3 AC 220 V ... 595

13.2.14.4 1FL2103-4AG connected to 1 AC 200 V/3 AC 220 V 596
13.2.14.5 1FL2104-2AG connected to 1 AC 200 V/3 AC 220 V 597
13.2.14.6 1FL2104-4AG connected to 1 AC 200 V/3 AC 220 V 598
13.2.14.7 1FL2104-2BG connected to 1 AC 200 V/3 AC 220 V 599
13.2.14.8 1FL2104-4BG connected to 1 AC 200 V/3 AC 220 V 600
13.2.14.9 1FL2102-2AF connected to 3 AC 380 V/3 AC 400 V 601
13.2.14.10 1FL2102-4AF connected to 3 AC 380 V/3 AC 400 V 602
13.2.14.11 1FL2103-2AF connected to 3 AC 380 V/3 AC 400 V 603
13.2.14.12 1FL2103-4AF connected to 3 AC 380 V/3 AC 400 V 604
13.2.14.13 1FL2104-2AF connected to 3 AC 380 V/3 AC 400 V 605
13.2.14.14 1FL2104-4AF connected to 3 AC 380 V/3 AC 400 V 606
13.2.14.15 1FL2104-2BF connected to 3 AC 380 V/3 AC 400 V 607
13.2.14.16 1FL2104-4BF connected to 3 AC 380 V/3 AC 400 V 608
13.2.14.17 1FL2105-2AF connected to 3 AC 380 V/3 AC 400 V 609
13.2.14.18 1FL2105-4AF connected to 3 AC 380 V/3 AC 400 V 610
13.2.14.19 1FL2203-2AG connected to 1 AC 200 V/3 AC 220 V 611
13.2.14.20 1FL2203-4AG connected to 1 AC 200 V/3 AC 220 V 612
13.2.14.21 1FL2204-2AG connected to 1 AC 200 V/3 AC 220 V 613
13.2.14.22 1FL2204-4AG connected to 1 AC 200 V/3 AC 220 V 614
13.2.14.23 1FL2204-2BG connected to 1 AC 200 V/3 AC 220 V 615
13.2.14.24 1FL2204-4BG connected to 1 AC 200 V/3 AC 220 V 616
13.2.14.25 1FL2203-2AF connected to 3 AC 380 V/3 AC 400 V 617
13.2.14.26 1FL2203-4AF connected to 3 AC 380 V/3 AC 400 V 618
13.2.14.27 1FL2204-2AF connected to 3 AC 380 V/3 AC 400 V 619
13.2.14.28 1FL2204-4AF connected to 3 AC 380 V/3 AC 400 V 620
13.2.14.29 1FL2204-2BF connected to 3 AC 380 V/3 AC 400 V 621
13.2.14.30 1FL2204-4BF connected to 3 AC 380 V/3 AC 400 V 622
13.2.14.31 1FL2205-2AF connected to 3 AC 380 V/3 AC 400 V 623
13.2.14.32 1FL2205-4AF connected to 3 AC 380 V/3 AC 400 V 624
13.2.14.33 1FL2304-2AF connected to 3 AC 380 V/3 AC 400 V 625
13.2.14.34 1FL2304-4AF connected to 3 AC 380 V/3 AC 400 V 626
13.2.14.35 1FL2306-1AC connected to 3 AC 380 V/3 AC 400 V 627
13.2.14.36 1FL2306-2AC connected to 3 AC 380 V/3 AC 400 V 628
13.2.14.37 1FL2306-4AC connected to 3 AC 380 V/3 AC 400 V 629
13.2.14.38 1FL2306-6AC connected to 3 AC 380 V/3 AC 400 V 630
13.2.14.39 1FL2306-7AC connected to 3 AC 380 V/3 AC 400 V 631
13.2.14.40 1FL2310-0AC connected to 3 AC 380 V/3 AC 400 V 632
13.2.14.41 1FL2310-2AC connected to 3 AC 380 V/3 AC 400 V 633
13.2.14.42 1FL2310-4AC connected to 3 AC 380 V/3 AC 400 V 634
13.2.14.43 1FL2310-6AC connected to 3 AC 380 V/3 AC 400 V 635

13.3 Technical data of MOTION-CONNECT cables 636
13.3.1 Technical data of MOTION-CONNECT 350 636
13.3.1.1 General technical data 636
13.3.1.2 Specific technical data 637
13.3.2 Technical data of MOTION-CONNECT 380 638
13.3.2.1 General technical data 638
13.3.2.2 Specific technical data 639
13.3.2.3 Acceleration characteristic curve 640

14 Examples/applications 641

A Appendix 643

A.1 UL Markings 643

A.2 EMERGENCY OFF and EMERGENCY STOP 645

A.3 Parameters 647
A.3.1 Explanation of the list of parameters 647
A.3.2 Parameter list 651

A.4 Assembling cables 880
A.4.1 Assembling connectors on the converter side 881
A.4.1.1 Assembling the cable lugs 881
A.4.1.2 Assembling the encoder connector 882
A.4.1.3 Assembling the setpoint connector 884
A.4.2 Assembling connectors on the motor side 886
A.4.2.1 Assembling the hybrid plug for 1FL2 motors, shaft heights 20, 30, and 40 887
A.4.2.2 Disassembling the hybrid plug for 1FL2 motors, shaft heights 20, 30, and 40 894
A.4.2.3 Assembling connectors for 1FL2 motors, shaft heights 48 and 52 896
A.4.2.4 Assembling connectors for 1FL2 motors, shaft heights 45, 65, and 90 898

A.5 Motor selection 903
A.5.1 Selection procedure 903
A.5.2 Selection examples 904

A.6 Replacement instructions for shaft sealing ring on 1FL2 motors SH20 and SH30 908

Introduction 1

1.1 About SINAMICS

Description

SINAMICS converters are the optimum solution for all drive applications extending from low voltage through to DC. All Siemens drive components, such as converters, motors, and controls, are matched to each other and can be integrated into your existing automation systems.

More information

You can find more information via the SINAMICS YouTube playlist:

YouTube playlist (https://www.youtube.com/playlist?list=PLw7lLwXw4H53rtHeTeifKtVMr2aXTYt0X)

1.2 About this manual

1.2.1 Content

Description

This manual provides a summary of all of the information required to operate the converter under safe conditions.

The manual enables the target groups being addressed to mount, install, connect, and commission the converter safely and in the correct manner.

To illustrate possible application areas for our products, typical use cases are listed in this product documentation and in the online help. These are purely exemplary and do not constitute a statement on the suitability of the respective product for applications in specific individual cases. Unless explicitly contractually agreed, Siemens assumes no liability for such suitability. Suitability for a particular application in specific individual cases must be assessed by the user, taking into account all technical, legal, and other requirements on a case-by-case basis. Always observe the descriptions of the technical properties and the applicable constraints of the respective product provided in the product documentation.

1.2.2 Target group

Description

This manual addresses the following target groups:

- Planning engineers
- Project engineers
- Technologists
- Installation personnel
- Programmers
- Commissioning engineers
- Machine operators
- Service and maintenance personnel

1.2.3 What's new?

Description

The most important supplements with respect to Edition 07/2025

- Supplementary descriptions about FS code
  Information is provided in the following section
  Rating plate (Page 45)
- New 1FL2 SH40 (New) motors
  Information about the new motors is provided in the following sections:
  Device combinations (Page 55)
  Dimension drawing for the 1FL2 motor, shaft height 40 (New) (Page 118)
  1FL2104-2BG connected to 1 AC 200 V/3 AC 220 V (Page 599)
  1FL2104-4BG connected to 1 AC 200 V/3 AC 220 V (Page 600)
  1FL2104-2BF connected to 3 AC 380 V/3 AC 400 V (Page 607)
  1FL2104-4BF connected to 3 AC 380 V/3 AC 400 V (Page 608)
  1FL2204-2BG connected to 1 AC 200 V/3 AC 220 V (Page 615)
  1FL2204-4BG connected to 1 AC 200 V/3 AC 220 V (Page 616)
  1FL2204-2BF connected to 3 AC 380 V/3 AC 400 V (Page 621)
  1FL2204-4BF connected to 3 AC 380 V/3 AC 400 V (Page 622)
- New accessories:
  RJ45 connectors (Page 63)
- New function:
  - Power failure detection (for S200 PTI only) (Page 280)
- Saving backup file to memory card
  Information is provided in the following section:
  Saving backup file to memory card (Page 540)
- Restoring drive data from a backup file
  Information is provided in the following section:
  Restoring drive data from a backup file (Page 541)

The most important updates with respect to Edition 07/2025:

- Merged system overview figures for 1 AC line connection and 3 AC line connection
  System overview (Page 39)
- Update on line connection conditions for installation between 2000 m and 4000 m
  Updated information is provided in the following section:
  Line connection conditions for the converter with the motor 1FL2 (Page 88)
- Optimization of function overview
  Deleted redundant descriptions about functions and added a table instead
  Overview of the functions (Page 235)

1.2.4 Standard scope

The functions of the system as delivered can only be found in the order documents.

Further functions may be executable in the system, which are not explained in this documentation. However, there is no entitlement to these functions in the case of a new delivery or service.

This documentation does not contain all detailed information on all types of the product. Furthermore, this documentation cannot take into consideration every conceivable type of installation, operation and service/maintenance.

The machine manufacturer must document any additions or modifications they make to the product themselves.

1.2.5 Use of third-party products in this documentation

This documentation contains recommendations relating to third-party products. Siemens accepts the fundamental suitability of these third-party products. You can use equivalent products from other manufacturers.

Siemens does not accept any warranty for the use of third-party products.

You can find details of our product partners here: website (https://www.siemens.com/global/en/company/partners/product-partners-industry.html).

1.2.6 Websites of third-party companies

This document may contain hyperlinks to third-party websites. Siemens is not responsible for and shall not be liable for these websites and their content. Siemens has no control over the information which appears on these websites and is not responsible for the content and information provided there. The user bears the risk for their use.

1.3 Product documentation

Description

The product documentation for the servo drive system can be found on the Internet:

SiePortal SINAMICS (https://support.industry.siemens.com/cs/ww/en/view/109807358)

You can display documents or download them in PDF and HTML5 formats.

The product documentation for the servo drive system comprises the following documents:

Table 1-1 Product documentation

Information	Document	Content
Information about the servo drive system	Operating Instructions for SINAMICS S200	Installing, commissioning, and maintaining the servo drive system
	Compact Operating Instructions for SINAMICS S200	Essential contents of the Operating Instructions in reduced and compressed form
	Protective Devices for SINAMICS S200	Suitable components for overcurrent protection of the servo drive system Expansion of components contained in the Operating Instructions
General information	Industrial Cybersecurity Configuration Manual	Industrial Cybersecurity functions and safe operation of the SINAMICS product
Information about the optional components	Operating Instructions for SINAMICS SDI Pro 5.5"	Commissioning and performing diagnostics of the servo drive system using the SINAMICS SDI Pro 5.5" Operator Panel
	Operating Instructions for SINAMICS Smart Adapter	Installing a local wireless network with the SINAMICS Smart Adapter to commission and diagnose the servo drive system using an operating unit

1.4 Service and Support

1.4.1 ID link and Siemens Online Support

You can find additional information about the product:

- via ID link
- using the Siemens Industry Online Support
  - Website: SiePortal (https://support.industry.siemens.com/cs/ww/en/)
  - App Industry Online Support (for Apple iOS and Android)

Product-specific information via ID link

The QR code on your product and on the product packaging contains the ID link.

ID link is a globally unique identifier according to IEC 61406-1.

You can use the ID link to access product data, manuals, Declarations of Conformity, certificates and other information about your product.

Figure 1-1 QR code with ID link included

The ID link is characterized by a frame with a black corner at the bottom right.

Content of Siemens Online Support

- Product support
- Global forum for information and best practice sharing between users and specialists
- Local contact persons via the contact person database (→ Contact)
- Product information
- FAQs (frequently asked questions)
- Application examples
- Manuals
- Downloads
- Compatibility tool
- Newsletter with product selection

- Catalogs/brochures
- Certificates

1.4.2 Spare parts services

The online spare part service "Spares on Web (https://www.sow.siemens.com/)" offers spare parts for the product.

1.5 Important product information

1.5.1 Intended use

Requirement

WARNING

Death or serious injury if not used as intended

Not using as intended can result in hazardous states.

- Carefully observe the description of intended use.

WARNING

Incorrect use of the motor

Incorrect use of the motor may cause death, serious injury (crushing) and/or property damage.

- Carefully observe the description of intended use.
- Do not use the motors in hazardous areas (where there is a risk of explosion), if the motors have not been expressly released and authorized for these types of applications. Carefully observe any special supplementary notes that may be attached.
- Make sure that the conditions at the location of use comply with all the rating plate data.
- Make sure that the conditions at the location of use comply with the conditions specified in this documentation. When necessary, take into account deviations regarding approvals or country-specific regulations.

Note

It cannot be guaranteed that EMC emission limits are complied with if the products are connected to an isolated line supply grounded through a high ohmic connection or a line supply with grounded line conductor.

- Draw-up an EMC plan to comply with the EMC requirements of the intended application.

Description

The products described in this manual, together with software, accessories and options, form an electric drive to supply low-voltage AC motors.

The products are professional equipment for stationary indoor use in industrial, light-industrial, and commercial applications and are intended for supply from non-public (industrial) low-voltage line supplies. The products are not intended for use in residential areas and are not intended for supply from public low-voltage networks.

The products must be properly transported and stored and must be installed, commissioned and maintained by professionals who have adequate knowledge to implement the safety, cybersecurity and EMC measures in accordance with the specifications described in this manual and with recognized state-of-the-art engineering practice.

You may only use the products when the following requirements are complied with:

- All regulations and directives that are applicable at the place of final use, especially with regard to electrical safety, functional safety and electromagnetic compatibility (EMC).
- All instructions, notes, technical data, safety information and cybersecurity information contained in this document and other supporting documentation.

The products are part of a machine or system. When designing the system, apply suitable measures to ensure that the products can provide intended safety to persons and material assets and achieve intended electromagnetic compatibility.

Perform a risk assessment of the complete application, including third-party products and implement adequate safety and cybersecurity measures before using the product.

Products without protective enclosure (IP00 or IP20) are intended for installation in control panels or control cabinets that provide the required level of protection.

Any other use that is not expressly permitted can result in malfunctions and unpredictable hazards.

The motors are intended for converter control and may not be connected directly to the line supply. The motors are not approved for use in explosive atmospheres.

1.5.2 Firmware updates and constraints

Description

Firmware updates and constraints for the converters with the current firmware are available in SIOS:

Updates and constraints for SINAMICS S200 (https://sieportal.siemens.com/su/bk8ZQ)

1.5.3 Open-source software (OSS)

Description

The license conditions and copyright information of the open-source software components used by the device are saved on the device itself. You can download license and copyright information onto your PC via the support page of the integrated web server.

1.5.4 Compliance with the General Data Protection Regulation

Description

Siemens complies with the principles of the **General Data Protection Regulation (EU),** in particular the principle of data minimization ("privacy by design"). For this SINAMICS product, this means:

- **User management and access control (UMAC)**
  The product processes or stores the following personal data:
  – Login data for user management and access control:
    User name, group, password, role, rights.

  The data for user management and access control is stored in the converter and optionally on a memory card.
- **Support data (optional)**
  For optimal support in service cases, the end user or machine manufacturer (OEM) can optionally store contact data (header, email address, telephone number, homepage) in the converter.
  If this data is created, the author must give thought to data protection consent for this optional data. Siemens takes no responsibility for this data.
  This support contact data can be read and is freely accessible in, for example, the user interface as well as in the diagnostics report. This data is not encrypted.

This data is used for user management and access control (UMAC) and for the support function. The storage of this data is appropriate and limited to what is necessary, as it is essential to identify the authorized operators and service contact.

The personal data is also available as part of the backup system to ensure fast recovery of use cases.

The above-mentioned personal data cannot be stored anonymously or pseudonymized, as it serves the purpose of identifying the operating personnel. The anonymization or pseudonymization, e.g. of the login data, must be performed using suitable login names and contact data by the plant/machine operator.

Our product does not provide any functions for automatically deleting personal data. Individual UMAC data can be deleted manually by authorized personnel as soon as this is deemed recommended/required.

Fundamental safety instructions 2

2.1 General safety instructions

⚠ WARNING

Electric shock and danger to life due to other energy sources

Touching live components can result in death or severe injury.

- Only work on electrical devices when you are qualified for this job.
- Always observe the country-specific safety rules.

Generally, the following steps apply when establishing safety:

1. Prepare for disconnection. Notify all those who will be affected by the procedure.
2. Isolate the drive system from the power supply and take measures to prevent it being switched back on again.
3. Wait until the discharge time specified on the warning labels has elapsed.
4. Check that there is no voltage between any of the power connections, and between any of the power connections and the protective conductor connection.
5. Check whether the existing auxiliary supply circuits are de-energized.
6. Ensure that the motors cannot move.
7. Identify all other dangerous energy sources, e.g. compressed air, hydraulic systems, or water. Switch the energy sources to a safe state.
8. Check that the correct drive system is completely locked.

After you have completed the work, restore the operational readiness in the inverse sequence.

⚠ WARNING

Risk of electric shock and fire from supply networks with an excessively high impedance

Excessively low short-circuit currents can lead to the protective devices not tripping or tripping too late, and thus causing electric shock or a fire.

- In the case of a conductor-conductor or conductor-ground short-circuit, ensure that the short-circuit current at the point where the converter is connected to the line supply at least meets the minimum requirements for the response of the protective device used.
- You must use an additional residual-current device (RCD) if a conductor-ground short circuit does not reach the short-circuit current required for the protective device to respond. The required short-circuit current can be too low, especially for TT supply systems.

⚠ WARNING

Risk of electric shock and fire from supply networks with an excessively low impedance

Excessively high short-circuit currents can lead to the protective devices not being able to interrupt these short-circuit currents and being destroyed, and thus causing electric shock or a fire.

- Ensure that the prospective short-circuit current at the line terminal of the converter does not exceed the breaking capacity (SCCR or Icc) of the protective device used.

⚠ WARNING

Electric shock in the absence of grounding

For products with protection class I, a faulty protective conductor connection means that the product is not grounded in conformance with the applicable regulations. In the absence of grounding, high voltages may be present in open, exposed parts, which can result in serious injury or death if touched.

- Ground the product in conformance with the applicable regulations.

⚠ WARNING

Electric shock due to connection to an unsuitable power supply

When equipment is connected to an unsuitable power supply, exposed components may carry a hazardous voltage. Contact with hazardous voltage can result in severe injury or death.

- Only use power supplies that provide SELV (Safety Extra Low Voltage) or PELV- (Protective Extra Low Voltage) output voltages for all connections and terminals of the electronics modules.

⚠ WARNING

Electric shock from a damaged product

Improper handling can damage the product. If a product is damaged, hazardous voltages may be present on the housing or exposed components, which can result in serious injury or death if touched.

- Ensure compliance with the limit values specified in the technical data during transport, storage and operation.
- Never use a damaged product.

⚠ WARNING

Electric shock due to unconnected cable shields

Hazardous touch voltages can occur through capacitive cross-coupling due to unconnected cable shields.

- As a minimum, connect cable shields and the cores of cables that are not used at one end at the grounded housing potential.

⚠ WARNING

Arcing when a plug connection is opened during operation

Opening a plug connection when a system is in operation can result in arcing that may cause serious injury or death.

- Only open plug connections when the equipment is in a voltage-free state, unless it has been explicitly stated that they can be opened in operation.

⚠ WARNING

Electric shock due to residual charges in power components

Because of the capacitors, a hazardous voltage is present for up to 5 minutes after the power supply has been switched off. Contact with live parts can result in death or serious injury.

- Wait for 5 minutes before you check that the unit really is in a no-voltage condition and start work.

NOTICE

Product damage caused by an unsuitable screw-tightening tool

Unsuitable screw-tightening tools or tightening methods can damage the product screws.

- Use a screw-tightening tool that fits the screw head exactly.
- Tighten the screws with the torque specified in the technical documentation.
- Use a torque wrench or a mechanical precision nut runner with a dynamic torque sensor and speed limitation system.
- Regularly calibrate the screw-tightening tool used.

⚠ WARNING

Electromagnetic interference due to inadequate shield support

A lack of adequate shield support for the power cables can cause malfunctions and impermissibly high levels of interference.

- Use the shield connection plates supplied or recommended.
- Use the shield connection clips recommended.

⚠ WARNING

Active implant malfunctions due to electromagnetic fields

Converters generate electromagnetic fields (EMF) in operation. Electromagnetic fields may interfere with active implants, e.g. pacemakers. People with active implants in the immediate vicinity of an converter are at risk.

- As the operator of an EMF-emitting installation, assess the individual risks of persons with active implants.
- Observe the data on EMF emission provided in the product documentation.

⚠ WARNING

Active implant malfunctions due to permanent-magnet fields

Even when switched off, electric motors with permanent magnets represent a potential risk for persons with heart pacemakers or implants if they are close to converters/motors.

- If this affects you, maintain the minimum distances specified in the Information for use.
- When transporting or storing permanent-magnet motors always use the original packing materials with the warning labels attached.
- Clearly mark the storage locations with the appropriate warning labels.
- IATA regulations must be observed when transported by air.

⚠ WARNING

Improper lifting and transportation operations

Improper lifting and transportation of the motor may cause death, severe bodily injury, or damage to property.

- When disassembling the motor, watch out for imminent movements when the motor is released.
- Use all lifting equipment, industrial trucks, and load handling devices in accordance with the regulations.
- Only use lifting equipment and load handling devices with maximum capacities which match the weight of the motor.
- Do not attach any additional loads to the lifting equipment.
- To hoist the motor, use suitable cable-guidance or spreading equipment, particularly if the motor is equipped with built-on assemblies.
- Do not attach lifting equipment to the power connector or signal connector of the motor.
- Do not stand in the slewing range of hoisting gear or under suspended loads.
- When placing down the motor, ensure that it cannot roll away.
- If anything is unclear, please contact the machine manufacturer, stating the machine type and serial number.

NOTICE

Shaft sealing rings damaged by solvent

Solvents can damage the shaft sealing rings of the motor.

- When removing preservation agents or when carrying out cleaning work, avoid that any solvent comes into contact with the shaft sealing rings.

CAUTION

Symptomatic respiratory and skin reaction to chemicals

A newly purchased product might contain traces of substances that are identified as sensitizers.

Sensitizers are substances which can cause sensitization in the lungs and skin after exposure to them.

Once sensitized, individuals can have severe reactions to further exposure, even in small amounts. In the most extreme cases, individuals might develop asthma or dermatitis respectively.

- If the product has a strong smell, keep it in a well-ventilated area for 14 days.

WARNING

Unexpected machine motion caused by radio devices or cell phones

Radio devices, cell phones, or mobile WLAN devices in the immediate vicinity of the product can cause the product to malfunction or damage the product. The malfunction may impair the functional safety of machines and can therefore endanger persons or result in material damage.

- Avoid operating radio devices, cell phones, and mobile WLAN devices in the direct vicinity of converters and operating units.
- Scan the machine readable code, e.g. a QR code at least 0.4 m away from the converter, or switch off the converter power supply before scanning.
- Only operate built-in devices with the control cabinet doors closed.
- When the control cabinet doors are open, only qualified personnel may perform service and maintenance work.

⚠ CAUTION

Radio frequency interference in residential areas

When you operate products with EMC category C2 in residential areas, the products may cause radio frequency interference.

When you operate products with EMC category C3 or C4 in residential areas, it is to be expected that the devices will cause radio frequency interference.

- Do not operate products with EMC category C2 in residential areas.
- Do not operate products with EMC category C3 or C4 in public low-voltage grids that supply residential buildings.

NOTICE

Damage to motor insulation due to excessive voltages

When operated on systems with grounded line conductors or in the event of a ground fault in the IT system, the motor insulation can be damaged by the higher voltage against ground. If you use motors that have insulation that is not designed for operation with grounded line conductors, you must perform the following measures:

- IT system: Use a ground fault monitor and eliminate the fault as quickly as possible.
- TN or TT systems with grounded line conductor: Use an isolating transformer on the line side.

⚠ WARNING

Fire due to inadequate ventilation clearances

Inadequate ventilation clearances can cause the product to overheat and result in fire and smoke. A fire with smoke development can result in serious injury or death. Overheating increases the probability of failure and shortens product service life.

- Observe the minimum distances specified for the product as ventilation clearances.

NOTICE

Overheating due to inadmissible mounting position

The product can overheat and therefore be damaged if mounted in an incorrect position.

- Only operate the product in approved mounting positions.

⚠ WARNING

Unrecognized dangers due to missing or illegible warning labels

Dangers might not be recognized if warning labels are missing or illegible. Unrecognized dangers may cause accidents resulting in serious injury or death.

- Check that the warning labels are complete based on the documentation.
- Attach any missing warning labels to the components, where necessary in the national language.
- Replace illegible warning labels.

NOTICE

Product damage caused by improper insulation resistance testing

High test voltages can damage the product.

- Measure the insulation resistance of low voltage circuits of machines or systems only with ≤ 500 V DC.
- Measure the insulation resistance of SELV circuits of machines or systems only with ≤ 250 V DC.

NOTICE

Product damage caused by improper voltage testing

High test voltages can damage the product. Capacitive leakage currents can distort the test results.

- Disconnect the products before carrying out voltage testing on the machine. [1)]

[1)] The products are subject to a voltage test in accordance with the IEC 61800-5-1 product standard and must be disconnected during testing in accordance with IEC 60204-1:2021 Section 18.4.

⚠ WARNING

Unexpected movement of machines caused by inactive safety functions

Inactive or non-adapted safety functions can trigger unexpected machine movements that may result in serious injury or death.

- Observe the information in the appropriate product documentation before commissioning.
- Carry out a safety inspection for functions relevant to safety on the entire system, including all safety-related components.
- Ensure that the safety functions used in your drives and automation tasks are adjusted and activated through appropriate parameterizing.
- Perform a function test.
- Only put your plant into live operation once you have guaranteed that the functions relevant to safety are running correctly.

WARNING

Malfunctions of the machine as a result of incorrect or changed parameter settings

As a result of incorrect or changed parameterization, machines can malfunction, which in turn can lead to injuries or death.

- Protect the parameterization against unauthorized access.
- Handle possible malfunctions by taking suitable measures, e.g. EMERGENCY STOP or EMERGENCY OFF.

WARNING

Injury caused by moving or ejected parts

Contact with moving motor parts or drive output elements and the ejection of loose motor parts (e.g. feather keys) out of the motor enclosure can result in severe injury or death.

- Remove any loose parts or secure them so that they cannot be flung out.
- Do not touch any moving parts.
- Safeguard all moving parts using the appropriate safety guards.

WARNING

Danger to life caused by machine movement and loose objects

Machine movement and loose objects that can fall out or be ejected can cause death or severe bodily injury.

- Be sure to complete all assembly and adjustment work on the machine.
- Ensure that there are no people in the danger zone of the machine before it is switched on.
- Before switching on, check that there are no loose objects in or on the motor that can fall or be flung off.
- Before switching on, check that all safety guard covers for touch protection are installed and all safety equipment functions correctly.

WARNING

Uncovered rotating or live parts

Covers over rotating or live parts and covers that ensure the motor degree of protection or are required for air guidance, and thus for cooling, must be closed during operation.

Death, serious bodily injury, or material damage may result if the required covers are removed.

- Do not remove covers while the motor is running.

⚠ WARNING

Danger to life due to a changed operating behavior of the machine

Changes in the operating behavior of the machine compared with normal operation indicate that the function of the machine is impaired. Changes in the operating behavior of the machine can be seen, for example, in one or more of the following effects:

- An increased power consumption
- Higher temperatures
- Vibration
- Unusual noises
- Unusual smells
- The monitoring devices respond

Impaired machine functioning can cause faults that may result directly or indirectly in death, serious bodily injury, or property damage.

- Immediately inform the maintenance personnel.
- If in doubt, shut down the motor immediately, taking into account the plant-specific safety regulations.

NOTICE

Motor damage in the event of uneven running or abnormal noises

Improper handling during transportation, storage, or assembly can damage the motor. A damaged motor may run unevenly or make abnormal noises during operation. If you operate a damaged motor, this may result in damage to the winding or bearings, or even total destruction of the system.

- Switch the motor off in case of uneven running or abnormal noises.
- Identify the cause.

NOTICE

Motor damage when the maximum speed is exceeded

The maximum speed n_{max} is the highest permissible motor operating speed. The maximum speed is specified on the rating plate (nameplate).

Impermissible speeds can cause damage to the motor.

- Enable speed setpoint monitoring in the control unit or drive so as not to exceed the maximum speed n_{max}.

⚠ WARNING

Fire due to incorrect operation of the motor

When incorrectly operated and in the case of a fault, the motor can overheat resulting in fire and smoke. This can result in severe injury or death. Further, excessively high temperatures destroy motor components and result in increased failures as well as shorter service lives of motors.

- Operate the motor according to the relevant specifications.
- Only operate the motors in conjunction with effective temperature monitoring.
- Immediately switch off the motor if excessively high temperatures occur.

NOTICE

Wear of the holding brake due to impermissible voltage supply

Operating the holding brake outside the permissible voltage range at the motor connection will damage the brake.

- Only operate the holding brake within its permissible voltage range.

⚠ CAUTION

Burns and thermal damage caused by hot surfaces

Temperatures above 100 °C may occur on the surfaces of motors, converters, and other drive components.

Touching hot surfaces may result in burns. Hot surfaces may damage or destroy temperature sensitive parts.

- Ensure that temperature-sensitive parts do not come into contact with hot surfaces.
- Mount drive components so that they are not accessible during operation.

Measures when maintenance is required:

- Allow drive components to cool off before starting any work.
- Use appropriate personnel protection equipment, e.g. gloves.

2.2 Product damage due to electric fields or electrostatic discharge

Electrostatic sensitive devices (ESDs) are electronic devices, modules, or individual components with freely accessible contacts, e.g. products with signal and communication interfaces or modules without an enclosed housing, which can be damaged by electrostatic fields or electrostatic discharges.

NOTICE

Product damage due to electric fields or electrostatic discharge

Electric fields or electrostatic discharge can damage individual electronic components, integrated circuits, and modules. A pre-damaged or damaged product causes malfunctions, which in turn increase the probability of failure and a shortened service life.

- Only pack, store, transport, and ship individual electronic components, modules, or products in their original packaging or in other suitable materials, e.g. conductive ESD foam or aluminum foil.
- When you open the product, e.g. to replace a component or a module, or if you touch electrical contacts, then ground yourself using one of the following measures:
  - Wear an ESD armband
  - Wear ESD shoes or ESD grounding straps in ESD areas with conductive flooring
- Only place electronic modules or individual components on a conductive surface, e.g. on an ESD surface, on ESD foam, on an ESD packaging bag, or an ESD transport container.

2.3 Warranty and liability for application examples

Application examples are not binding and do not claim to be complete regarding configuration, equipment, or any eventuality which may arise. Application examples do not represent customer-specific solutions, but merely serve to provide assistance with typical tasks.

As the user you yourself are responsible for ensuring that the products described are operated correctly. Application examples do not relieve you of your responsibility for safe handling when using, installing, operating and maintaining the equipment.

2.4 Cybersecurity information

Siemens provides products and solutions with industrial cybersecurity functions that support the secure operation of plants, systems, machines and networks.

In order to protect plants, systems, machines and networks against cyber threats, it is necessary to implement – and continuously maintain – a holistic, state-of-the-art industrial cybersecurity concept. Siemens' products and solutions constitute one element of such a concept.

Customers are responsible for preventing unauthorized access to their plants, systems, machines and networks. Such systems, machines and components should only be connected to an enterprise network or the internet if and to the extent such a connection is necessary and only when appropriate security measures (e.g. firewalls and/or network segmentation) are in place.

For additional information on industrial cybersecurity measures that may be implemented, please visit
https://www.siemens.com/cybersecurity-industry.

Siemens' products and solutions undergo continuous development to make them more secure. Siemens strongly recommends that product updates are applied as soon as they are available and that the latest product versions are used. Use of product versions that are no longer supported, and failure to apply the latest updates may increase customer's exposure to cyber threats.

To stay informed about product updates, subscribe to the Siemens Industrial Cybersecurity RSS Feed under
https://www.siemens.com/cert.

Further information is provided on the Internet:

Configuration Manual Industrial Cybersecurity (https://support.industry.siemens.com/cs/ww/en/view/109975311)

⚠ WARNING

Unsafe operating states resulting from software manipulation

Software manipulations, e.g. viruses, Trojans, or worms, can cause unsafe operating states in your system that may lead to death, serious injury, and property damage.

- Keep the software up to date.
- Incorporate the automation and drive components into a state-of-the-art, integrated industrial cybersecurity concept for the installation or machine.
- Make sure that you include all installed products in the integrated industrial cybersecurity concept.
- Protect files stored on exchangeable storage media from malicious software with suitable protection measures, e.g. virus scanners.
- Carefully check all cybersecurity-related settings once commissioning has been completed.

2.5 Residual risks of power drive systems

When assessing the machine or system-related risk in accordance with the respective local regulations (e.g. EC Machinery Directive), the machine manufacturer or system integrator must take into account the following residual risks emanating from the control and drive components of a drive system:

1. Unintentional movements of driven machine or system components during commissioning, operation, maintenance, and repairs caused by, for example,
   - Hardware faults and/or software errors in the sensors, control system, actuators, and connections
   - Response times of the control system and of the drive
   - Operation and/or environmental conditions outside the specification
   - Condensation/conductive contamination
   - Parameterization, programming, cabling, and installation errors
   - Use of wireless devices/mobile phones in the immediate vicinity of electronic components
   - External influences/damage
   - X-ray, ionizing radiation and cosmic radiation
2. Unusually high temperatures inside and outside the components, including open flames, as well as emissions of light, noise, particles, gases, etc. due to fault conditions, e.g.:
   - Component failure
   - Software errors
   - Operation and/or environmental conditions outside the specification
   - External influences/damage
   - Short circuits or ground faults in the intermediate DC circuit of the converter
3. Hazardous shock voltages caused by, for example:
   - Component failure
   - Influence during electrostatic charging
   - Induction of voltages in moving motors
   - Operation and/or environmental conditions outside the specification
   - Condensation/conductive contamination
   - External influences/damage
4. Electrical, magnetic and electromagnetic fields generated in operation that can pose a risk to people with a pacemaker, implants or metal replacement joints, etc., if they are too close
5. Release of environmental pollutants or emissions as a result of improper operation of the system and/or failure to dispose of components safely and correctly

6. Influence of network-connected and wireless communications systems, e.g. ripple-control transmitters or data communication via the network or mobile radio, WLAN or Bluetooth.
7. Motors for use in potentially explosive areas:
   When moving components such as bearings become worn, this can cause enclosure components to exhibit unexpectedly high temperatures during operation, creating a hazard in areas with a potentially explosive atmosphere.

For more information about the residual risks of the drive system components, see the relevant sections in the technical user documentation.

Description

3

3.1 System overview

Description

The SINAMICS S200 servo drive system (PTI version) is a single-axis servo drive system. It includes the following components tailored to one another:

- SINAMICS S200 converter product line (PTI version), which is available in the following two variants:
  - SINAMICS S200 Basic PTI converter (referred to as "S200 Basic PTI")
  - SINAMICS S200 PTI converter (referred to as "S200 PTI")
- SIMOTICS S-1FL2 motor (referred to as "1FL2")
- MOTION-CONNECT 350 standard cable or MOTION-CONNECT 380 drag chain cable

The converter and the motor are intended for use with a higher-level controller (PLC).

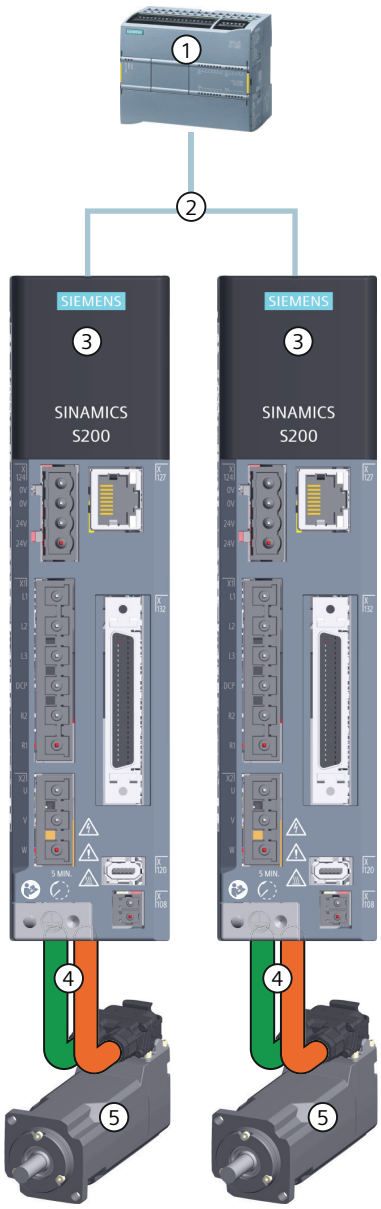

① Controller (for example, SIMATIC S7-1200 or S7-1200 G2)
② Communication between the converter and the controller via setpoint cables
③ SINAMICS S200 converter product line
④ MOTION-CONNECT 350 or MOTION-CONNECT 380 cables for the motor power, motor holding brake, and the encoder connections
⑤ SIMOTICS S-1FL2 motor

Figure 3-1 System overview

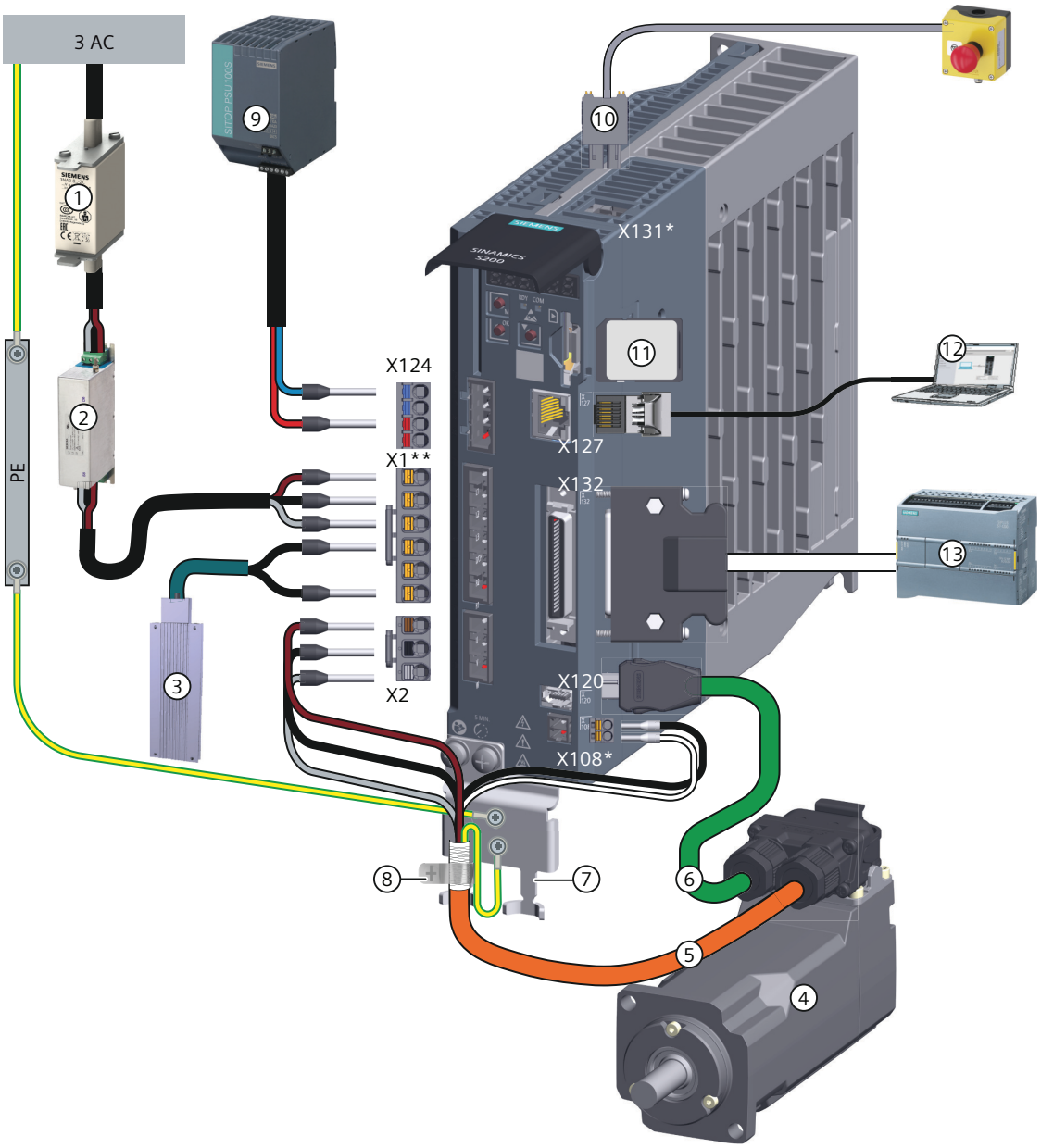

* The interfaces X131 and X108 are available on S200 PTI only. For more information about the motor holding brake connection on S200 Basic PTI, see Section "Connecting the motor holding brake (Page 143)".

** For the single-phase mains supply network, you can connect the mains supply to any two terminals out of L1, L2, and L3.

① Fuse or motor starter protector
② Line filter (optional)[1)]
③ External braking resistor (optional)[1)]
④ SIMOTICS S-1FL2 motor
⑤ Motor power cable (with brake conductors)
⑥ Encoder cable
⑦ Shield plate
⑧ Shield clamp
⑨ 24 V DC power supply
⑩ STO plug
⑪ Memory card (SD card, optional)
⑫ Commissioning device

⑬ Controller (for example, SIMATIC S7-1200)

[1] When using the components, make sure that they are connected to the ground correctly.

Figure 3-2 System components and accessories for converters with 3 AC line connection

More information

For more information about the device combination, see Section "Device combinations (Page 55)".

For more information about the interface connection, see Section "Connecting (Page 131)".

3.1.1 Converter

Description

The S200 converter product line (PTI version) includes two converter variants: S200 Basic PTI (200 V only) and S200 PTI (200 V and 400 V).

All the converter variants can be used on the 1 AC 200 V or 3 AC 200 V mains supply network to control the 1FL2 motor with low or medium moments of inertia.

S200 PTI can additionally be used on the 3 AC 400 V mains supply network to control the 1FL2 motor with all the moments of inertia.

Table 3-1 Converter variants

Converter	Frame size	Rated power (kW)	Mains supply network
S200 Basic PTI/S200 PTI	FSA	0.1, 0.2	1 AC/3 AC 200 V ... 240 V
	FSB	0.4	
	FSC	0.75, 1.0	
S200 PTI	FSA	0.2, 0.4	3 AC 380 V ... 480 V
	FSB	0.75, 1.0	
	FSC	1.75, 2.5	
	FSD	3.5, 5.0, 7.0	

3.1.2 Motor

Description

The 1FL2 motor is intended for use with the S200 converter product line. The motor is available in the 200 V variant (low or medium inertia) and the 400 V variant (low, medium, or high inertia), and with different shaft heights.

Table 3-2 Motor variants

Shaft height	Moments of inertia	Rated power (kW)	Mains supply network
SH20	Low inertia	0.05, 0.1	200 V/400 V
SH30	Low inertia, medium inertia	0.2, 0.4	
SH40		0.75, 1.0	
SH40 (New)		0.75, 1.0	
SH48	Medium inertia	0.94, 1.45	400 V
SH52	Low inertia	1.45, 2.1	
SH45	High inertia	0.4, 0.75	
SH65		0.75, 1.0, 1.5, 1.75, 2.0	
SH90		2.5, 3.5, 5.0, 7.0	

3.1.3 MOTION-CONNECT 350 and 380 cables

Description

Prefabricated MOTION-CONNECT cables are used to connect the 1FL2 motor to the S200 converter product line. The cables are available in two variants:

- MOTION-CONNECT 350 standard cable, which provides a connection solution for fixed installation applications
- MOTION-CONNECT 380 drag chain cable, which provides a connection solution for drag chain installation applications that require a high number of bending cycles

3.2 Scope of delivery

3.2.1 Converter

Description

The converter delivery includes at least the following components:

- A ready-to-run converter with loaded firmware
- A connector kit:
  - X124 plug: connector for external 24 V DC power supply
  - X1 plug: connector for power supply (jumper for internal braking resistor and blanking plug for R1 terminal are included)
  - X2 plug: connector for motor power connection
  - X108 plug: connector for motor holding brake (only available in the delivery scope of S200 PTI)
  - X131 (STO) plug: connector for connecting the external safety devices (only available in the delivery scope of S200 PTI)
  - X131 (STO) disable plug: connector for disabling Safety Integrated Functions (only available in the delivery scope of S200 PTI)
  - A shield plate and four fixing screws
- A "Safety instructions" sheet
- The converter contains open-source software (OSS). The OSS license terms are stored in the converter and can be displayed via webserver.

3.2.1.1 Rating plate

Description

The rating plate contains the article number and the technical data of the converter.

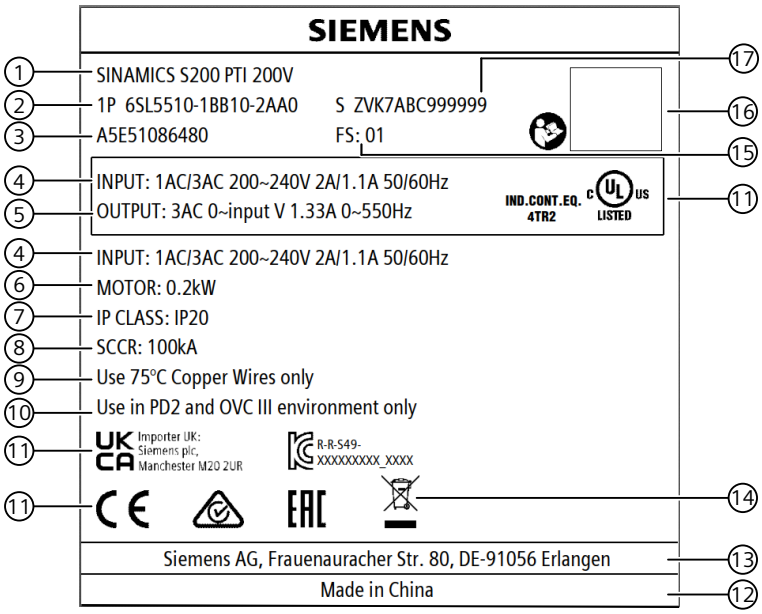

1	Converter type	10	Pollution degree and overvoltage category
2	Article number	11	Certifications
3	Material number	12	Country of origin
4	Mains input	13	Manufacturer's address
5	Output data	14	Note on disposal
6	Supported motor rated power	15	Functional State
7	Degree of protection		≥ 11: EMMC version
8	Rated short-circuit current		< 11: Flash version
9	Copper wire	16	QR code
		17	Serial number

Figure 3-3 Rating plate example

3.2.1.2 Article number explanation

Description

The following figure shows an explanation of the article number for the converter.

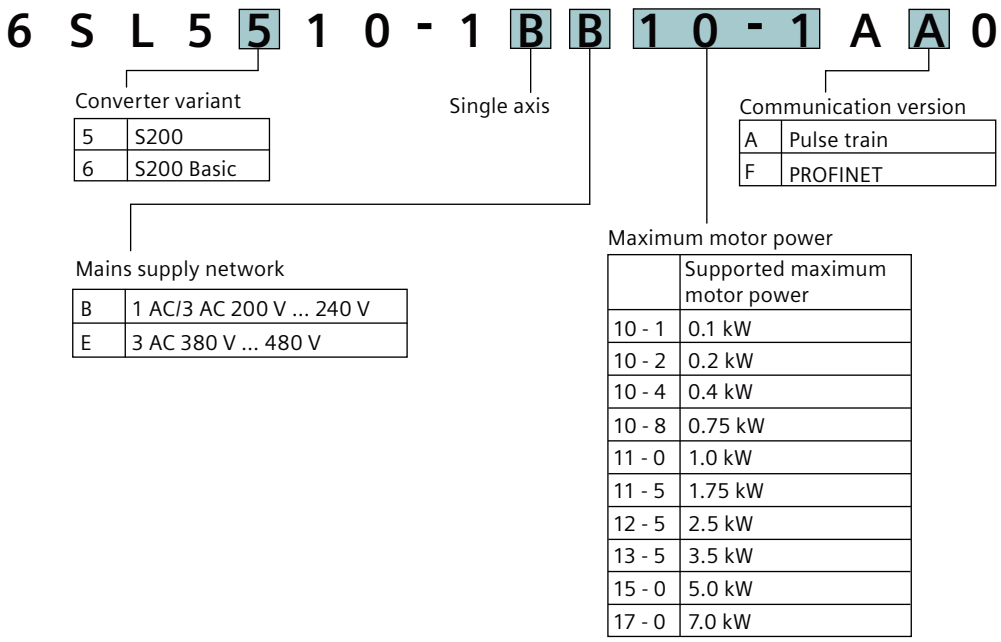

Figure 3-4 Article number for the S200 converter product line

3.2.1.3 Serial number explanation

Description

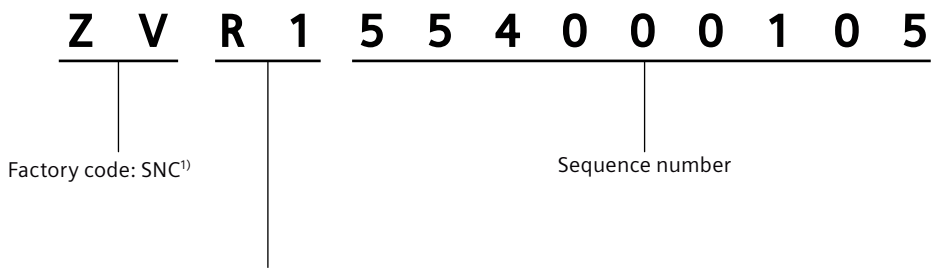

Production date (year/month)

Code	Calendar year	Code	Month
A	2010, 2030	1	January
B	2011, 2031	2	February
C	2012, 2032	3	March
D	2013, 2033	4	April
E	2014, 2034	5	May
F	2015, 2035	6	June
H	2016, 2036	7	July
J	2017, 2037	8	August
K	2018, 2038	9	September
L	2019, 2039	0	October
M	2020, 2040	N	November
N	2021, 2041	D	December
P	2022, 2042		
R	2023, 2043		
S	2024, 2044		
T	2025, 2045		
U	2026, 2046		
V	2027, 2047		
W	2028, 2048		
X	2029, 2049		

[1)] SNC = Siemens Numerical Control Ltd., Nanjing

Figure 3-5 Serial number for S200 converter product line

3.2.2 Motor

Description

The 1FL2 motor is a servo motor with an integrated encoder and a high degree of protection.

The motor delivery includes a ready-to-run motor.

3.2.2.1 Rating plate

Description

The rating plate contains the article number and the technical data of the motor.

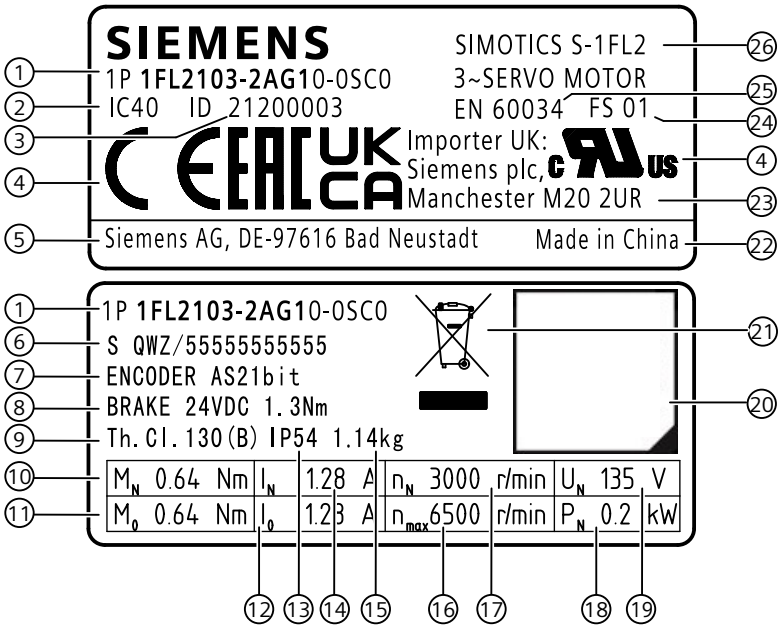

1	Article number	14	Rated current I_N
2	Cooling method according to EN 60034-6	15	Weight
3	Motor ID	16	Maximum speed n_{max}
4	Certifications	17	Rated speed n_N
5	Manufacturer's address	18	Rated power P_N
6	Serial number	19	Rated voltage U_N
7	Encoder type and resolution	20	QR code
8	Holding brake	21	Note on disposal
9	Thermal class	22	Country of origin
10	Rated torque M_N	23	UK importer address
11	Static torque M_0	24	Functional State
12	Stall current I_0	25	Standard for all rotating electrical machines
13	Degree of protection	26	Motor type

Figure 3-6 Rating plate example for 1FL2 SH20 and SH30

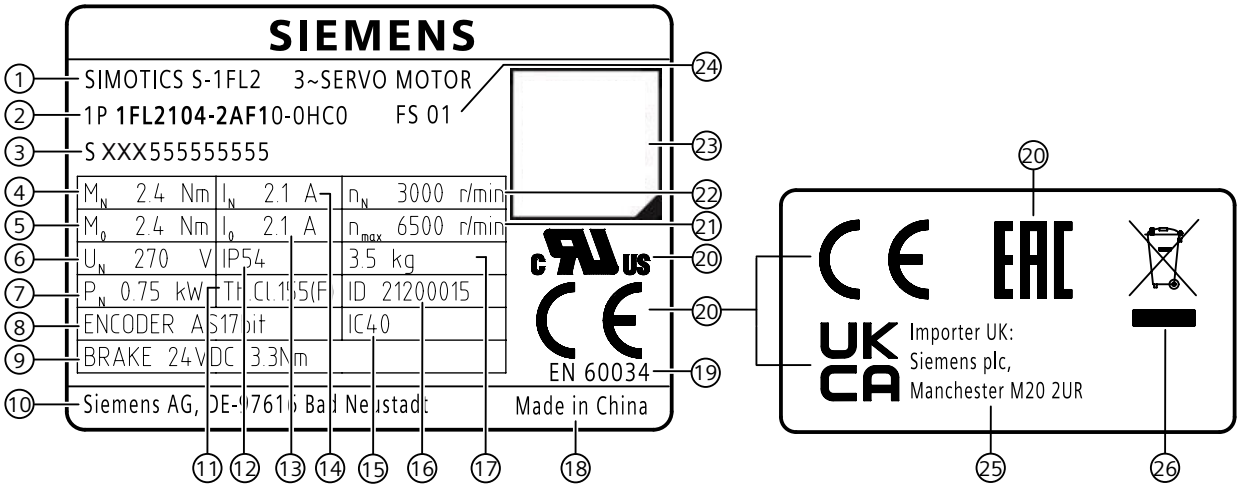

1	Motor type	14	Rated current I_N
2	Article number	15	Cooling method according to EN 60034-6
3	Serial number	16	Motor ID
4	Rated torque M_N	17	Weight
5	Static torque M_0	18	Country of origin
6	Rated voltage U_N	19	Standard for all rotating electrical machines
7	Rated power P_N	20	Certifications
8	Encoder type and resolution	21	Maximum speed n_{max}
9	Holding brake	22	Rated speed n_N
10	Manufacturer's address	23	QR code
11	Thermal class	24	Functional State
12	Degree of protection	25	UK importer address
13	Stall current I_0	26	Note on disposal

Figure 3-7 Rating plate example for 1FL2 SH40/SH40 (New) and above

3.2.2.2 Article number explanation

Description

The following figure shows an explanation of the article number for the motor.

1 F L 2 3 0 6 - 2 A C 0 1 - 0 M B 0

Inertia

1	Low inertia
2	Medium inertia
3	High inertia

A	Natural cooling
B [1]	Natural cooling, compact

Shaft height (SH)

02	20 mm	05	48 mm
03	30 mm		52 mm
04	40 mm	06	65 mm
	45 mm	10	90 mm

Brake

0	Without brake
1	With brake

Winding design

G	3000 r/min @ 200 V
C	2000 r/min @ 400 V
F	3000 r/min @ 400 V

Length/static torque

0	12.6 Nm, 2.5 kW, SH90
1	3.7 Nm, 0.75 kW, SH65
2	0.16 Nm, 0.05 kW, SH20
	0.64 Nm, 0.2 kW, SH30
	2.4 Nm, 0.75 kW, SH40/SH40 (New)
	1.45 Nm, 0.4 kW, SH45
	3.6 Nm, 0.94 kW, SH48
	5 Nm, 1.45 kW, SH52
	5 Nm, 1 kW, SH65
	18.1 Nm, 3.5 kW, SH90
4	0.32 Nm, 0.1 kW, SH20
	1.27 Nm, 0.4 kW, SH30
	3.2 Nm, 1 kW, SH40/SH40 (New)
	3.02 Nm, 0.75 kW, SH45
	6 Nm, 1.45 kW, SH48
	8 Nm, 2.1 kW, SH52
	8 Nm, 1.5 kW, SH65
	25.2 Nm, 5 kW, SH90
6	8.8 Nm, 1.75 kW, SH65
	35.2 Nm, 7 kW, SH90
7	13.3 Nm, 2 kW, SH65

Degree of protection

0	IP54
1	IP65, with shaft sealing ring

Shaft extension

0	Plain shaft
1	Shaft with feather key (half-key balancing)

Encoder

H	Absolute encoder, 17-bit single-turn
S	Absolute encoder, 21-bit single-turn
M	Absolute encoder, 21-bit single-turn + 12-bit multiturn

Connection technology

C	Metal hybrid connetor
B	Metal angular connector

Version number

0	First version

[1] For SH40 (New) only

Figure 3-8 Article number for 1FL2 servo motors

3.2.2.3 Serial number explanation

Description

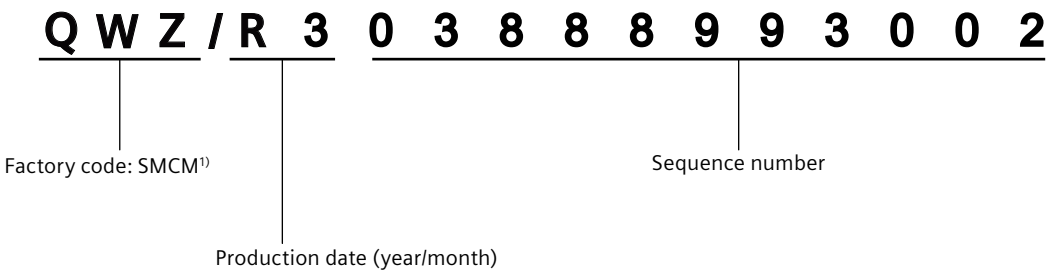

Code	Calendar year	Code	Month
A	2010, 2030	1	January
B	2011, 2031	2	February
C	2012, 2032	3	March
D	2013, 2033	4	April
E	2014, 2034	5	May
F	2015, 2035	6	June
H	2016, 2036	7	July
J	2017, 2037	8	August
K	2018, 2038	9	September
L	2019, 2039	O	October
M	2020, 2040	N	November
N	2021, 2041	D	December
P	2022, 2042		
R	2023, 2043		
S	2024, 2044		
T	2025, 2045		
U	2026, 2046		
V	2027, 2047		
W	2028, 2048		
X	2029, 2049		

[1)] SMCM = Siemens Motion Control Motors JiangSu Ltd.

Figure 3-9 Serial number for 1FL2 SH20, SH30, and SH40 (New)

Z V R 1 5 5 4 0 0 0 1 0 5

Factory code: SNC[1)]

Sequence number

Production date (year/month)

Code	Calendar year	Code	Month
A	2010, 2030	1	January
B	2011, 2031	2	February
C	2012, 2032	3	March
D	2013, 2033	4	April
E	2014, 2034	5	May
F	2015, 2035	6	June
H	2016, 2036	7	July
J	2017, 2037	8	August
K	2018, 2038	9	September
L	2019, 2039	0	October
M	2020, 2040	N	November
N	2021, 2041	D	December
P	2022, 2042		
R	2023, 2043		
S	2024, 2044		
T	2025, 2045		
U	2026, 2046		
V	2027, 2047		
W	2028, 2048		
X	2029, 2049		

[1)] SNC = Siemens Numerical Control Ltd., Nanjing

Figure 3-10 Serial number for 1FL2 SH40 and above

3.2.3 MOTION-CONNECT 350 and 380 cables

3.2.3.1 Overview

Description

The MOTION-CONNECT 350/380 cable delivery includes the following components:

- The MOTION-CONNECT cable with assembled connectors for connecting the motor to the converter
- A shield clamp for connection of the power cable to the shield plate of the converter
- A "Safety instructions" sheet

3.2.3.2 Article number explanation

Description

Table 3-3 Article numbers for MOTION-CONNECT 350 and 380 cables

Description		Position of the article number																	
		1	2	3	4	5	6	7	-	8	9	10	11	12	-	13	14	15	16
MOTION-CONNECT cables		6	F	X	3		0	2											
Cable variant	MOTION-CONNECT 350 standard cable					5													
	MOTION-CONNECT 380 drag chain cable					8													
Connector type	Hybrid connector									7									
	Power connector or brake connector									5									
	Encoder connector									2									
Cable type	Power cable with brake conductors										D								
	Power cable without brake conductors										C								
	Dual cable with hybrid connector, drive-end outlet											D							
	Dual cable with hybrid connector, non-drive-end outlet											N							
	Power cable with M17 circular connector											K							
	Power cable with M23 circular connector									5	C	L							
	Brake cable									5	B	L							
	Encoder cable									2	X	B							
Cable cross-section	Dual cable with hybrid connector (0.75 mm²/18 AWG)												0	1					
	Power cable with M23 circular connector (0.75 mm²/18 AWG)																		
	Power cable with M23 circular connector (1.5 mm²/16 AWG)												0	2					
	Power cable with M23 circular connector (2.5 mm²/14 AWG)												1	2					
	Power cable with M17 circular connector (0.75 mm²/18 AWG)												3	2					
	Brake cable (0.75 mm²/18 AWG)									5	B	L	0	3					
	Encoder cable (0.25 mm²/24 AWG and 0.38 mm²/22 AWG)									2	X	B	1	1					
										2	X	B	1	2					
Cable length	3 m															1	A	D	0
	5 m															1	A	F	0
	7 m															1	A	H	0
	10 m															1	B	A	0
	15 m															1	B	F	0
	20 m															1	C	A	0
	30 m															1	D	A	0

More information

For more information about the cable and connector combination, see Section "MOTION-CONNECT cables and connectors (Page 59)".

3.3 Device combinations

3.3.1 200 V servo drive system

Description

Table 3-4 200 V servo drive system

1FL2 servo motors						200 V converters (S200 PTI/S200 Basic PTI)		MOTION-CONNECT prefabricated cables
Rated torque (Nm)	**Rated power (kW)**	**Rated speed (r/min)**	**Shaft height (mm)**	**Inertia**	**Article number 1FL2**	**Article number 6SL5□10-1BB**	**Frame size**	**Article number 6FX3□02-7□□01-[1]**
0.16	0.05	3000	20	Low	102-2AG□□-□□C0	10-1AA0	FSA	□□□□
0.32	0.1	3000			102-4AG□□-□□C0			
0.64	0.2	3000	30	Low	103-2AG□□-□□C0	10-2AA0		
				Medium	203-2AG□□-□□C0			
1.27	0.4	3000		Low	103-4AG□□-□□C0	10-4AA0	FSB	
				Medium	203-4AG□□-□□C0			
2.4	0.75	3000	40	Low	104-2AG□□-□□C0	10-8AA0	FSC	
				Medium	204-2AG□□-□□C0			
3.2	1.0	3000		Low	104-4AG□□-□□C0	11-0AA0		
				Medium	204-4AG□□-□□C0			
2.4	0.75	3000	40 (New)	Low	104-2BG□1-□□C0	10-8AA0		
				Medium	204-2BG□1-□□C0			
3.2	1.0	3000		Low	104-4BG□1-□□C0	11-0AA0		
				Medium	204-4BG□1-□□C0			
Cable length								
3 m								1AD0
5 m								1AF0
7 m								1AH0
10 m								1BA0
15 m								1BF0
20 m								1CA0
30 m								1DA0

[1] The last four positions (□□□□) in the cable article number define the cable length corresponding to the length code.

3.3.2 400 V servo drive system

Description

Table 3-5 400 V servo drive system

1FL2 servo motors						400 V converters (S200 PTI only)		MOTION-CONNECT pre-fabricated cables
Rated torque (Nm)	**Rated power (kW)**	**Rated speed (r/min)**	**Shaft height (mm)**	**Inertia**	**Article number 1FL2**	**Article number 6SL5510-1BE**	**Frame size**	**Article number 6FX3□02-[1)]**
0.16	0.05	3000	20	Low	102-2AF□□-□□C0	10-2AA0	FSA	Dual cable with hybrid connector: 7□□01-□□□□ Dual cable variants: • Power cable (with brake conductors) + encoder cable • Power cable (without brake conductors) + encoder cable
0.32	0.1	3000			102-4AF□□-□□C0			
0.64	0.2	3000	30	Low	103-2AF□□-□□C0			
				Medium	203-2AF□□-□□C0			
1.27	0.4	3000		Low	103-4AF□□-□□C0	10-4AA0		
				Medium	203-4AF□□-□□C0			
2.4	0.75	3000	40	Low	104-2AF□□-□□C0	10-8AA0	FSB	
				Medium	204-2AF□□-□□C0			
3.2	1.0	3000		Low	104-4AF□□-□□C0	11-0AA0		
				Medium	204-4AF□□-□□C0			
2.4	0.75	3000	40 (New)	Low	104-2BF□1-□□C0	10-8AA0		
				Medium	204-2BF□1-□□C0			
3.2	1.0	3000		Low	104-4BF□1-□□C0	11-0AA0		
				Medium	204-4BF□1-□□C0			
3.0	0.94	3000	48	Medium	205-2AF□1-□□B0			Power cable (with brake conductors): 5DK32-□□□□ Power cable (without brake conductors): 5CK32-□□□□ Encoder cable: 2XB11-□□□□
4.6	1.45	3000			205-4AF□1-□□B0	11-5AA0	FSC	
4.6	1.45	3000	52	Low	105-2AF□1-□□B0			
6.6	2.1	3000			105-4AF□1-□□B0	12-5AA0		

1FL2 servo motors						400 V converters (S200 PTI only)		MOTION-CONNECT pre-fabricated cables
Rated torque (Nm)	Rated power (kW)	Rated speed (r/min)	Shaft height (mm)	Inertia	Article number 1FL2	Article number 6SL5510-1BE	Frame size	Article number 6FX3□02-[1]
1.27	0.4	3000	45	High	304-2AF□1-□□B0	10-4AA0	FSA	Power cable:
2.39	0.75	3000			304-4AF□1-□□B0	10-8AA0	FSB	5CL□□-□□□□
3.58	0.75	2000	65		306-1AC□1-□□B0			Brake cable:
4.78	1.0	2000			306-2AC□1-□□B0	11-0AA0		5BL03-□□□□
7.16	1.5	2000			306-4AC□1-□□B0	11-5AA0	FSC	Encoder cable:
8.4	1.75	2000			306-6AC□1-□□B0			2XB12-□□□□
9.6	2.0	2000			306-7AC□1-□□B0	12-5AA0		
11.9	2.5	2000	90		310-0AC□1-□□B0			
16.7	3.5	2000			310-2AC□1-□□B0	13-5AA0	FSD	
23.9	5.0	2000			310-4AC□1-□□B0	15-0AA0		
33.4	7.0	2000			310-6AC□1-□□B0	17-0AA0		
Cable length								
3 m								1AD0
5 m								1AF0
7 m								1AH0
10 m								1BA0
15 m								1BF0
20 m								1CA0
30 m								1DA0

[1] The last four positions (□□□□) in the cable article number define the cable length corresponding to the length code.

3.4 Accessories

3.4.1 Connector kits

Description

If you need new connectors used on the converter front panel, you can order connector kits from Siemens using the following article numbers.

Description	Article number
Connector kit for S200 PTI	6SL5568-0XX00-0AA0
Connector kit for S200 Basic PTI	6SL5668-0XX00-0AA0

Scope of delivery

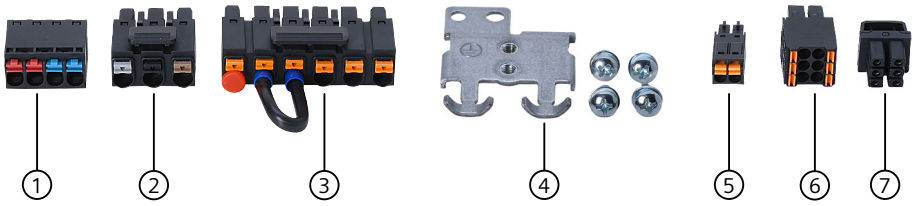

1. X124 plug
2. X2 plug
3. X1 plug
4. Shield plate, with 4 fixing screws
5. X108 plug[1)]
6. X131 (STO) plug[1)]
7. X131 (STO) disable plug[1)]

[1)] Only available in the connector kit for S200 PTI

3.4.2 Cables and connectors

3.4.2.1 MOTION-CONNECT cables and connectors

Description

Siemens recommends that you use MOTION-CONNECT prefabricated cable assemblies and connectors for connecting the motor to the converter. All Siemens cable assemblies and connectors are tested and compliant with CE standards and EMC requirements.

Table 3-6 Overview of MOTION-CONNECT 350 and 380 cables

MOTION-CONNECT 350 and 380 cables				Connectors	
Type	**Article number 6FX3□02-[1)]**	**Applicable 1FL2 motor**	**Cross-section for conductors (mm^2)**	**Drive side 6FX2003-**	**Motor side 6FX2003-**
Dual cable with hybrid connector: Power cable (with brake conductors)[2)] + encoder cable 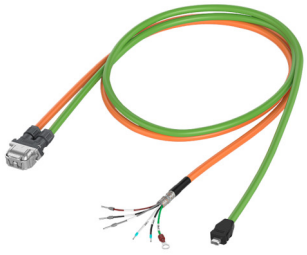	7DD01-□□□□	SH20 SH30 SH40 SH40 (New)	• Power cable (with brake conductors): – 4 × 0.75 + 2 × 0.38 (4 × 18 AWG + 2 × 22 AWG) • Encoder cable: – Cable length ≤ 15 m: 3 × 2 × 0.25 (3 × 2 × 24 AWG) – Cable length 20 m or 30 m: 2 × 2 × 0.25 + 2 × 0.38 (2 × 2 × 24 AWG + 2 × 22 AWG)	0DE61	3HD00
	7DN01-□□□□				3HN00
Dual cable with hybrid connector: Power cable (without brake conductors) + encoder cable 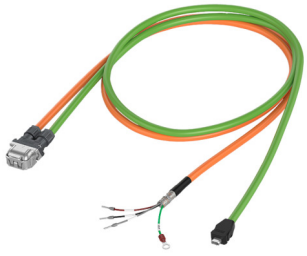	7CD01-□□□□		• Power cable (without brake conductors): – 4 × 0.75 (4 × 18 AWG) • Encoder cable: – Cable length ≤ 15 m: 3 × 2 × 0.25 (3 × 2 × 24 AWG) – Cable length 20 m or 30 m: 2 × 2 × 0.25 + 2 × 0.38 (2 × 2 × 24 AWG + 2 × 22 AWG)		3HD00
	7CN01-□□□□				3HN00

MOTION-CONNECT 350 and 380 cables				Connectors	
Type	**Article number 6FX3□02-[1)]**	**Applicable 1FL2 motor**	**Cross-section for conductors (mm²)**	**Drive side 6FX2003 -**	**Motor side 6FX2003-**
Power cable (with brake conductors) 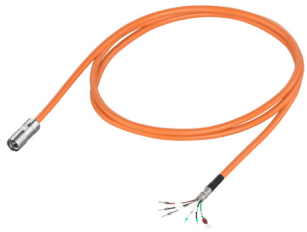	5DK32-□□□□	SH48 SH52	4 × 0.75 + 2 × 0.38 (4 × 18 AWG + 2 × 22 AWG)	-	0LL63
Power cable (without brake conductors) 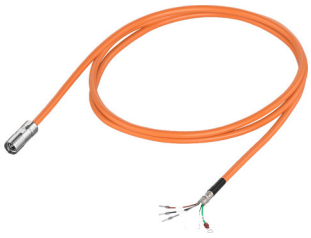	5CK32-□□□□		4 × 0.75 (4 × 18 AWG)		
Power cable (without brake conductors)	5CL01-□□□□	SH45 SH65	4 × 0.75 (4 × 18 AWG)	-	0LL13
	5CL02-□□□□	SH90	4 × 1.5 (4 × 16 AWG)		
	5CL12-□□□□		4 × 2.5 (4 × 14 AWG)		

MOTION-CONNECT 350 and 380 cables				Connectors	
Type	**Article number 6FX3□02-[1]**	**Applicable 1FL2 motor**	**Cross-section for conductors (mm²)**	**Drive side 6FX2003-**	**Motor side 6FX2003-**
Encoder cable	2XB11-□□□□	SH48 SH52	• Cable length ≤ 15 m: 3 × 2 × 0.25 (3 × 2 × 24 AWG) • Cable length 20 m or 30 m: 2 × 2 × 0.25 + 2 × 0.38 (2 × 2 × 24 AWG + 2 × 22 AWG)	0DE61	0DB63
	2XB12-□□□□	SH45 SH65 SH90			0DB13
Brake cable	5BL03-□□□□		2 × 0.75 (2 × 18 AWG)	-	0LL53

[1] The last four positions (□□□□) in the cable article number define the cable length corresponding to the length code: 1AD0 = 3 m, 1AF0 = 5 m, 1AH0 = 7 m, 1BA0 = 10 m, 1BF0 = 15 m, 1CA0 = 20 m, 1DA0 = 30 m.

[2] The conductors for the motor holding brake are integrated in the MOTION-CONNECT power cable.

If you prefer to use non-Siemens cables, Siemens provides the following connectors for you to assemble your own cables.

Note that Siemens does not provide any guarantee or warranty regarding the functionality, reliability or quality of non-Siemens cables used with the S200 servo drive system, and is not

responsible for device (e.g. motor and converter) damages due to the use of non-Siemens cables.

Table 3-7 Overview of connectors and crimp contacts

Cable connectors					
	Article number 6FX2003-	**Description**	**Connection type**	**Quantity per package**	**Illustration**
Connector (connected to motor)	3HD00	Hybrid plug (drive end)	Crimping	5 pieces/pack	
	3HN00	Hybrid plug (non-drive end)	Crimping	5 pieces/pack	
	0LL63	M17 circular connector	Crimping	5 pieces/pack	
	0DB63	M17 circular connector	Crimping	5 pieces/pack	
	0LL13	M23 circular connector	Crimping	5 pieces/pack	
	0DB13	M17 circular connector	Crimping	5 pieces/pack	
	0LL53	M17 circular connector	Crimping	5 pieces/pack	
Connector (connected to converter)	0DE61	IX-C connector	Crimping	5 pieces/pack	
Crimp contact	7HP00	Hybrid power contacts	Crimping	2000 pieces/reel	
	7HS00	Hybrid signal contacts	Crimping	2000 pieces/reel	

More information

For more information about the MOTION-CONNECT cable article number explanation, see Section "Article number explanation (Page 54)".

For more information about assembling cables, see Section "Assembling cables (Page 880)".

3.4.2.2 Setpoint cables and connectors

Description

The cable is used to connect the converter to a controller.

Table 3-8 Setpoint cables and connectors

Description	Article number
Setpoint connector 50-pin MDR connector	6SL3260-2NA00-0VA0
Setpoint cable with connector with a 50-pin MDR connector, free pins to controller side, length: 1 m	6SL3260-4NA00-1VB0
Setpoint cable with connectors on both sides with 50-pin MDR connectors on both sides and a separate terminal block to controller side, length: 0.5 m	6SL5562-0XX00-0AD0

More information

For more information about the setpoint cables and connectors, see Section "Interface description - X132 (Page 159)".

For more information about how to assemble the setpoint connectors, see Section "Assembling the setpoint connector (Page 884)".

3.4.2.3 RJ45 connectors

Description

Siemens recommends that you use the following connectors to establish the connection via Ethernet.

Table 3-9 RJ45 connectors

Description	Article number
IE FC RJ45 Plug RJ45 plug-in connector (10/100 Mbit/s) with rugged metal enclosure and FC connection system, for IE FC TP cable 2 x 2	
180° cable outlet	6GK1901-1BB10-2AA0
145° cable outlet	6GK1901-1BB30-0AA0
90° cable outlet	6GK1901-1BB20-2AA0
IE RJ45 Plug PRO IP65 push-pull connector for on-site assembly with TP cables 2 x 2	
With FC connection system	6GK1901-1BB20-6AA0
Without FC connection system	6GK1901-1BB10-6AA0

More information

For more information about the connections, see Section "Connecting the service interface (Ethernet) (Page 177)".

3.4.3 Line filters

Description

Line filters limit the conducted interference emissions from the converters to the permissible limit values according to IEC 61800-3 Category C2.

Line filters are passive components used to expand the EMC properties of the servo drive system.

Siemens recommends that you use a line filter to protect the system from high frequency noise.

Note

For applications where EMC Category C2 or C3 is necessary, the use of the recommended line filters is mandatory to fulfill the local EMC directives.

Table 3-10 Recommended line filters

Converter frame size	Rated current (A)	Article number
1 AC 200 V ... 240 V		
FSA/FSB/FSC	18	6SL5550-0XB21-8CA0
3 AC 200 V ... 240 V		
FSA/FSB/FSC	5	6SL3203-0BE15-0VA0
3 AC 380 V ... 480 V		
FSA/FSB	5	6SL5550-0XE20-5CA0
FSC	12	6SL5550-0XE21-2CA0
FSD	20	6SL5550-0XE22-0CA0

3.4.3.1 Technical data

Table 3-11 Technical data of line filters

Article number	6SL5550-0XB21-8CA0	6SL3203-0BE15-0VA0	6SL5550-0XE20-5CA0	6SL5550-0XE21-2CA0	6SL5550-0XE22-0CA0
Line voltage (V)	1 AC 200 ... 240	3 AC 275 ... 480	3 AC 275 ... 480	3 AC 275 ... 480	3 AC 275 ... 480
Rated current (A)	18	5	5	12	20
Power loss (W)	4.7	2	2.7	3.9	10.1
Type of connection	Screw terminals	Screw terminals	Screw terminals	Screw terminals	Screw terminals
Conductor cross-section (mm^2)					
For single-conductor connection	0.75 ... 6 (AWG 18 ... 10)	0.75 ... 6 (AWG 18 ... 10)	0.75 ... 6 (AWG 18 ... 10)	0.75 ... 6 (AWG 18 ... 10)	0.75 ... 6 (AWG 18 ... 10)
For flexible cable connection	0.75 ... 4 (AWG 18 ... 10)	0.75 ... 4 (AWG 18 ... 10)	0.75 ... 4 (AWG 18 ... 10)	0.75 ... 4 (AWG 18 ... 10)	0.75 ... 4 (AWG 18 ... 10)
Insulation stripping length (mm)	8 ... 9	8 ... 9	8 ... 9	8 ... 9	8 ... 9
Protective conductor connection	M5	M6	M6	M6	M6
Degree of protection	IP20	IP20	IP20	IP20	IP20
Dimensions (W × H × D, mm)	58 × 155 × 53	55 × 170 × 130	55 × 170 × 130	75 × 195 × 140	60 × 250 × 130
Weight (kg)	0.75	0.67	0.72	1.34	1.5
Leakage current (mA)	11.84	4.31	4.37	7.05	8.88

3.4.3.2 Dimension drawing

6SL5550-0XB21-8CA0

All dimensions are specified in millimeters.

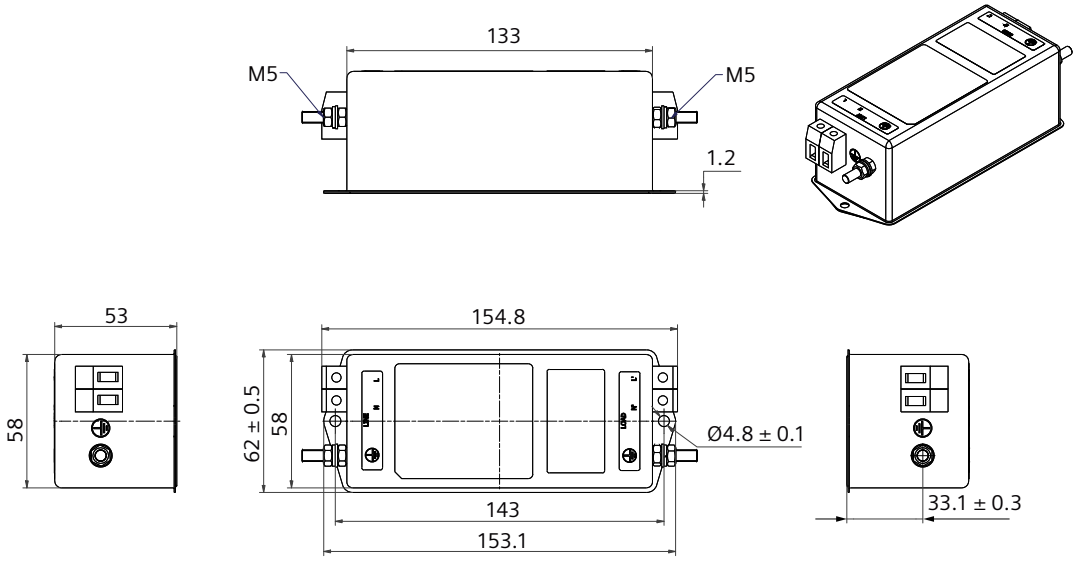

Tightening torque for the mounting screws: 2.5 Nm

Tightening torque for the protective conductor fastening bolt: 2.0 Nm ... 2.2 Nm

Tightening torque for the line-side and load-side screw connection: 0.7 Nm ... 0.8 Nm

6SL3203-0BE15-0VA0 and 6SL5550-0XE20-5CA0

All dimensions are specified in millimeters.

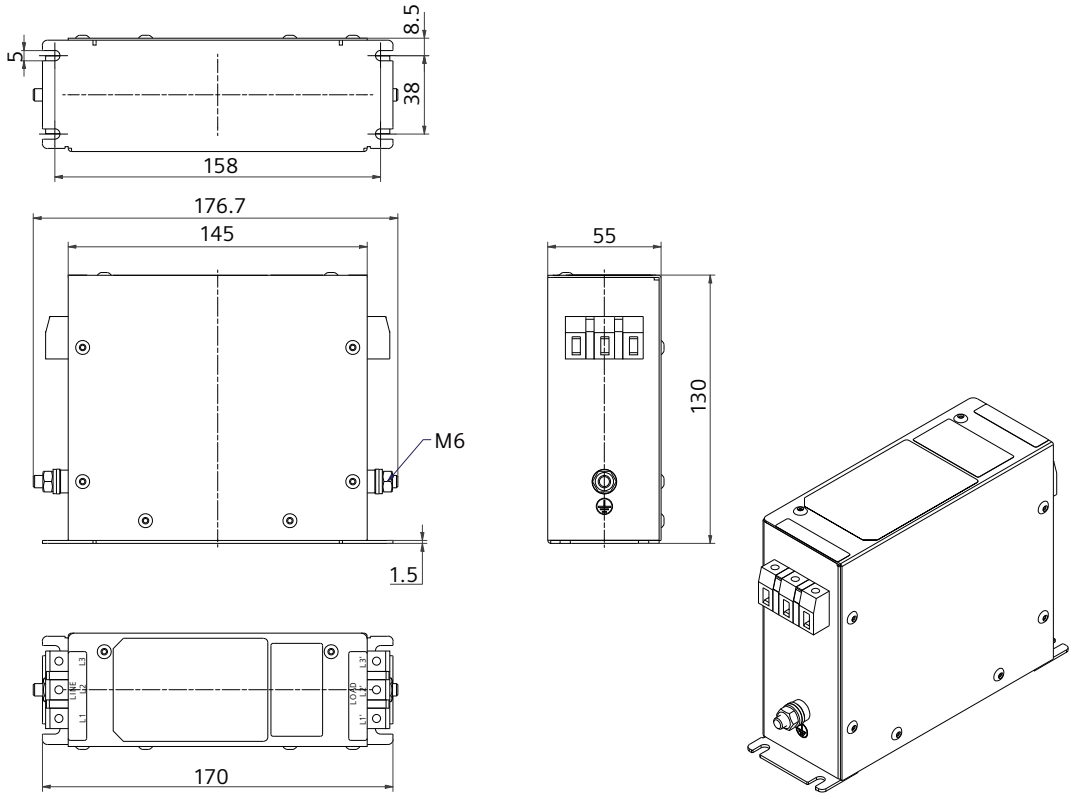

Tightening torque for the mounting screws: 2.5 Nm

Tightening torque for the protective conductor fastening bolt: 3.5 Nm ... 4.0 Nm

Tightening torque for the line-side and load-side screw connection: 0.7 Nm ... 0.8 Nm

6SL5550-0XE21-2CA0

All dimensions are specified in millimeters.

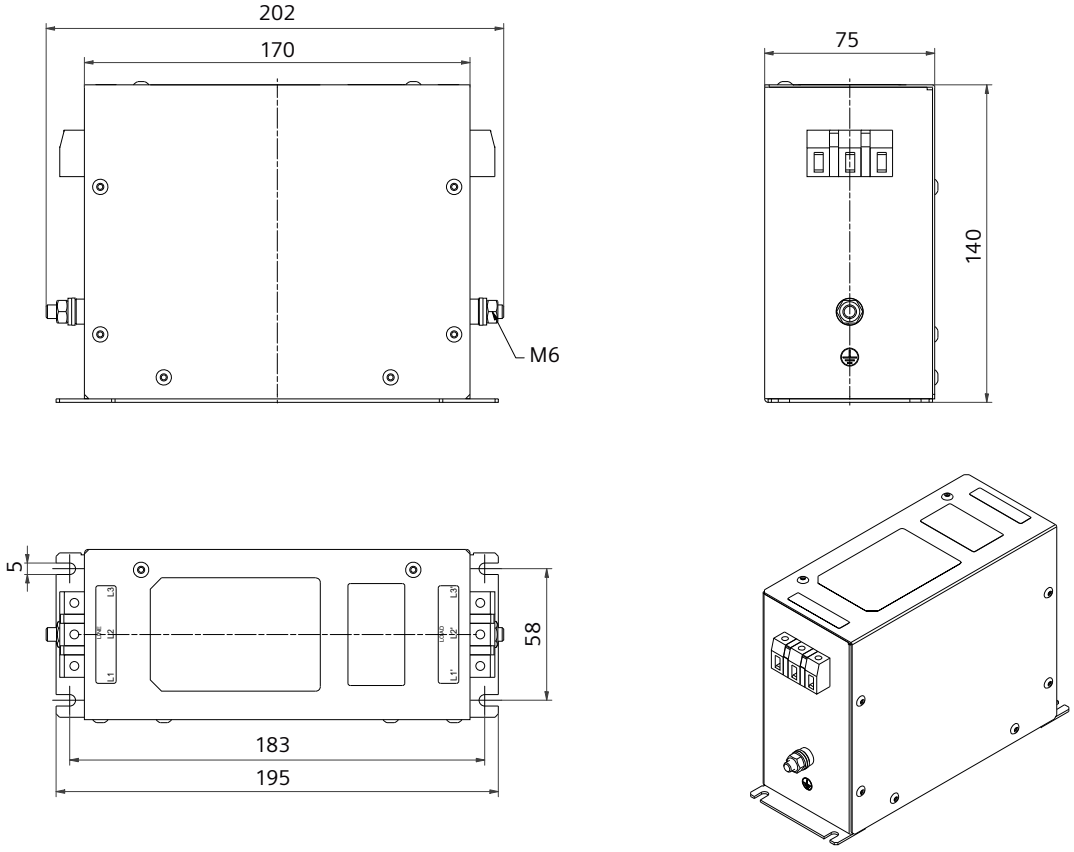

Tightening torque for the mounting screws: 2.5 Nm

Tightening torque for the protective conductor fastening bolt: 3.5 Nm ... 4.0 Nm

Tightening torque for the line-side and load-side screw connection: 0.7 Nm ... 0.8 Nm

6SL5550-0XE22-0CA0

All dimensions are specified in millimeters.

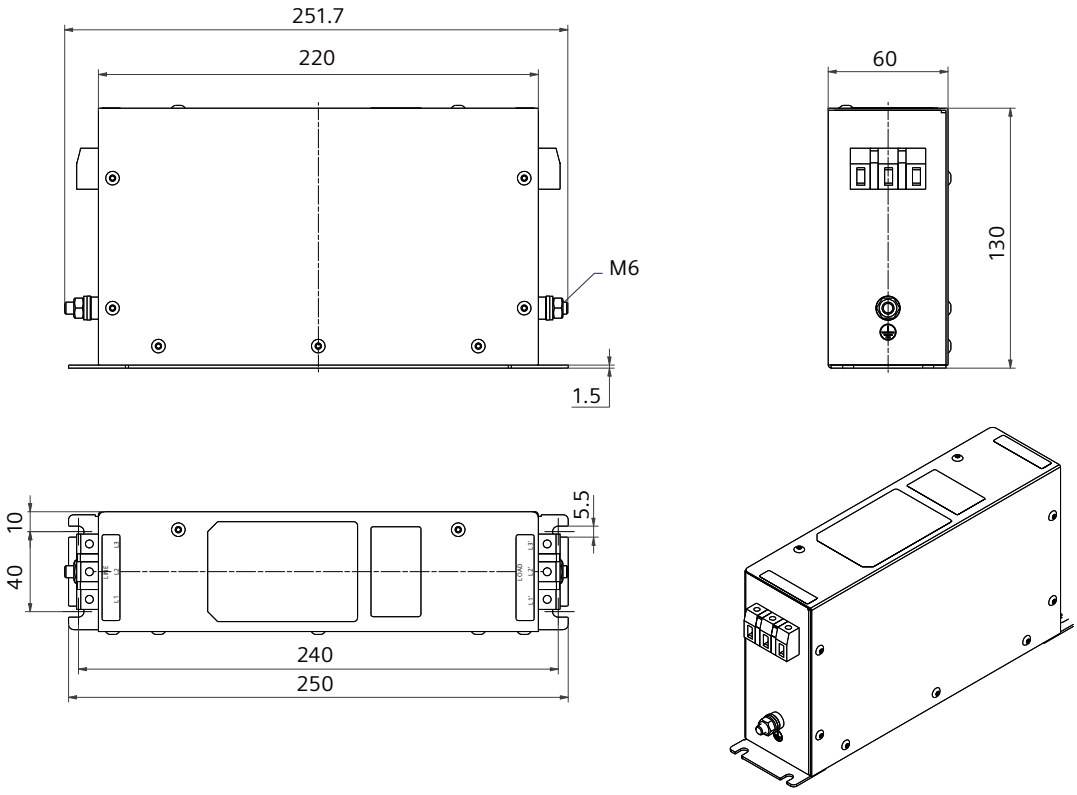

Tightening torque for the mounting screws: 2.5 Nm

Tightening torque for the protective conductor fastening bolt: 3.5 Nm ... 4.0 Nm

Tightening torque for the line-side and load-side screw connection: 0.7 Nm ... 0.8 Nm

3.4.3.3 Mounting instructions for the line filter

Description

- Observe the requirements for "EMC-compliant installation (Page 101)" when mounting the line filter.
- To achieve a low-impedance connection, mount the line filter on the same metallic mounting plate as the converter. Place the line filter close to the converter.

Figure 3-11 Connecting the line filter (example)

3.4.4 External 24 V DC power supply

Description

A 24 V DC power supply is needed to supply the converter. The following table provides the technical specifications of the required external 24 V DC power supply:

Table 3-12 Specifications of the required external 24 V DC power supply

Parameter	Description
Rated voltage (V)	24
Permissible voltage fluctuation (V)	When using a motor without brake: 20.4 ... 28.8 (-15% ... +20%) When using a motor with brake: 22.8 ... 28.8 (-5% ... +20%)
Maximum current (A)	• For 200 V variants When using a motor without brake: 1.2 When using a motor with brake: 2.2 • For 400 V variants When using a motor without brake: 1.2 When using a motor with brake: 3.2
Safety insulation class	SELV/PELV[1)]

[1)] For PELV systems, the ground connection must be carried out via the external 24 V DC power supply.

Note

Siemens recommends that you use different 24 V DC power supplies for the converter and for the inductive loads such as relays or solenoid valves.

If you use the 24 V DC power supply to supply both the inductive loads and the converter at the same time, make sure that you connect surge protection devices to the load side.

3.4.5 Replacement fans

Description

The 400 V converters FSC and FSD are integrated with a fan unit. The service life of the fan can reach 20000 hours at the rated operating temperature and the average 100% operating load.

Replace the defective fan in time to ensure the proper operation of the converter.

To replace the fan, you can order fan units from Siemens using the following article numbers.

Table 3-13 Replacement fans

SINAMICS S200 PTI	Article number
3 AC, 380 V ... 480 V	
FSC	6SL5560-0CE00-0AA0
FSD	6SL5560-0DE00-0AA0

3.4.6 Shield plate kit

Description

The shield plate kit (article number: 6SL5566-0AB00-0AA0) includes 4 shield plates and 16 fixing screws (M4 × 12). The shield plate can establish ground connections to both shielded cables and protective conductors.

You can use the supplied two M4 screws to fix the shield plate to a tightening torque of 2.2 Nm.

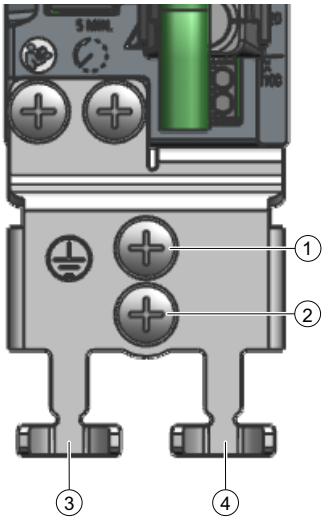

① Converter grounding
② Motor cable grounding
③ Fixing motor power cable
④ Reserved (recommended to fix brake cable and encoder cable)

Figure 3-12 Shield plate

For the connection of ① or ②, you can connect the protective conductor with a cable lug and an M4 screw to the shield plate.

3.4.7 IP65 degree of protection kit for 1FL2 motors SH20 and SH30

Description

The IP65 degree of protection kit can be used as spare part or for upgrading the degree of protection from IP54 to IP65.

The main part of the IP65 degree of protection kit is a shaft sealing ring.

The motor satisfies IP65 degree of protection when the shaft sealing ring is installed.

Note

You can order a motor with IP65 degree of protection directly, in which the shaft sealing ring is already integrated.

More information about ordering IP65 degree of protection can be found in Section "1FL2 article number explanation (Page 50)".

Table 3-14 Ordering data for the IP65 degree of protection kit

Motor	Article number	Illustration
1FL2102	1FL2902-0GC00	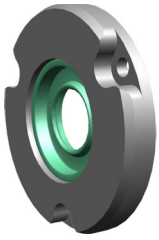
1FL2103 1FL2203	1FL2903-0GC00	

More information

For more information about how to install or replace the shaft sealing ring, see Section "Replacement instructions for shaft sealing ring on 1FL2 motors SH20 and SH30 (Page 908)".

For more information about the degree of protection of 1FL2 motors, see Section "Degree of protection (Page 577)".

3.4.8 Memory card

Description

The converter can be operated with or without a memory card inserted.

The converter supports FAT32-format memory cards with a capacity of up to 32 GB.

A permanently inserted memory card from Siemens is required to use functions that require a license. The license key can only be assigned to the Siemens memory card.

A memory card from Siemens or a third-party manufacturer (for example, Kingston or SanDisk) is suitable for the following situations:

- Data backup and restore
- Transfer of the converter settings from one converter to another
- Firmware update

Table 3-15 Memory card ordering data

Siemens memory card (SD card)	Article number
Memory card without firmware	6SL5970-0AA00-0AA0
Memory card with firmware V6.4	6SL5570-0GE00-0AA0
Memory card with firmware V6.5	6SL5570-0GF00-0AA0

3.4.9 SINAMICS Smart Adapter

Description

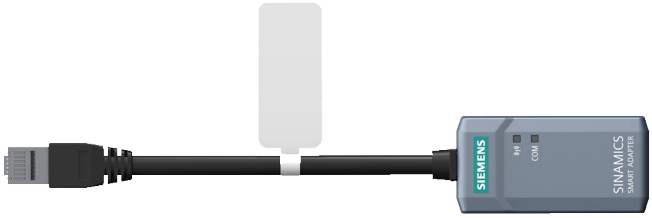

Figure 3-13 SINAMICS Smart Adapter

The SINAMICS Smart Adapter establishes a WLAN connection between the converter and an operating unit, for example a tablet, smartphone, panel or PC.

Once plugged into the converter's service interface X127, the SINAMICS Smart Adapter is ready to use. No battery is required.

The SINAMICS Smart Adapter may only be installed temporarily for commissioning and service activities. It may not be used permanently with the converter.

The SINAMICS Smart Adapter supports WPA3 WLAN encryption.

Table 3-16 SINAMICS Smart Adapter ordering data

Description	Article number
SINAMICS Smart Adapter	6SL4950-0AJ00-0AA0

More information

You can find more information on the Internet:

SINAMICS Smart Adapter Compact Operating Instructions (https://support.industry.siemens.com/cs/us/en/view/109826894)

3.4.10 SINAMICS SDI Pro 5.5"

Description

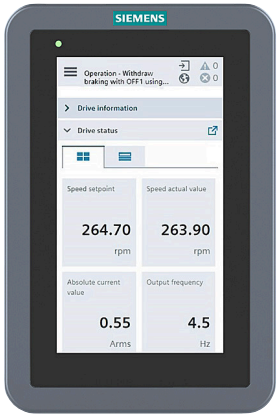

Figure 3-14 SINAMICS SDI Pro 5.5"

The SINAMICS SDI Pro 5.5" Operator Panel is a client device that allows you to access the web server integrated in the converter.

The SINAMICS SDI Pro 5.5" Operator Panel can be used to commission and diagnose the converter.

Table 3-17 SINAMICS SDI Pro 5.5" ordering data

Description	Article number
SINAMICS SDI Pro 5.5"	6SL4950-0AH35-2AA0

More information

You can find more information on the Internet:

SINAMICS Smart Drive Interface SDI Pro 5.5" Operating Instructions (https://support.industry.siemens.com/cs/us/en/view/109963311)

3.5 Directives and standards

Table 3-18 Certification overview

Certificate	S200 Basic PTI converter	S200 PTI converter	1FL2 motor	MOTION-CONNECT 350/380 cable
CE	✓	✓	✓	✓
UL	✓	✓	✓	✓
UKCA	✓	✓	✓	✓
EAC	✓	✓	✓	✓
KC	✓	✓	-	-
RoHS	✓	✓	✓	✓
REACH	✓	✓	✓	✓
RCM/C-Tick	✓	✓	-	-
Functional Safety	-	✓	-	-
SEMI F47	✓	✓	-	-
China RoHS	✓	✓	✓	✓
ISO 9001 & ISO 14001	✓	✓	✓	✓
WEEE	✓	✓	✓	✓
China Energy Label	-	-	✓	-

3.5.1 Directives and standards for the converter

The following directives and standards are relevant for the converter:

European Low Voltage Directive

The converter fulfills the requirements stipulated in the Low-Voltage Directive 2014/35/EU, if it is covered by the application area of this directive.

European Machinery Directive

The S200 PTI converter fulfills the requirements stipulated in the Machinery Directive 2006/42/EC, if it is covered by the application area of this directive.

However, the use of the converter in a typical machine application has been fully assessed for compliance with the main regulations in this directive concerning health and safety.

European RoHS Directive

The converter complies with Directive 2011/65/EU regarding limiting the use of certain hazardous substances.

European EMC Directive

The compliance of the converter with the regulations of the Directive 2014/30/EU has been verified through full compliance with the IEC 61800-3.

Functional Safety

The S200 PTI converter complies with the requirements relating to functional safety stipulated in IEC 61800-5-2, which depends on the correct functioning of the safety-related parts of the drive system and on external risk reduction measures.

Underwriters Laboratories (North American market)

The converters provided with the test symbol displayed fulfill the requirements stipulated for the North American market.

UKCA certification

The converter complies with the requirements for the market in Great Britain (England, Wales and Scotland).

Australia and New Zealand (RCM formerly C-Tick)

The converter with the symbol displayed on the rating plate fulfills the EMC requirements for Australia and New Zealand.

Eurasian Conformity

The converter complies with the requirements of the Russia/Belarus/Kazakhstan customs union (EAC).

EMC requirements for South Korea

The converter with the KC marking on the rating plate satisfies the EMC requirements for South Korea.

Registration, Evaluation and Authorization of Chemicals

The converter complies with the requirements of Registration, Evaluation and Authorization of Chemicals (REACH).

China RoHS

The converter complies with the requirements of China RoHS.

Immunity to voltage drop of semiconductor process equipment

The converter fulfills the requirements of the standard SEMI F47-0706.

Quality systems

Siemens employs a quality management system that meets the requirements of ISO 9001 and ISO 14001.

Taking back and recycling waste electrical and electronic equipment (WEEE)

The converter complies with the requirements laid down in Directive 2012/19/EU with regard to returning and recycling scrap electrical and electronic equipment.

Certificates for download

You can find all relevant certificates via the ID link embedded in the QR code on the rating plate of the converter.

3.5.2 Directives and standards for the motor

The following directives and standards are relevant for the motors:

European Low Voltage Directive

The motors fulfill the requirements stipulated in the Low-Voltage Directive 2014/35/EU, if they are covered by the application area of this directive.

European RoHS Directive

The motors comply with Directive 2011/65/EU regarding limiting the use of certain hazardous substances.

European EMC Directive

The compliance of the motors with the regulations of the Directive 2014/30/EU has been verified through full compliance with the IEC 61800-3.

Underwriters Laboratories (North American market)

The motors provided with the test symbol displayed fulfill the requirements stipulated for the North American market.

UKCA certification

The motors comply with the requirements for the market in Great Britain (England, Wales and Scotland).

Eurasian Conformity

The motors comply with the requirements of the Russia/Belarus/Kazakhstan customs union (EAC).

Registration, Evaluation and Authorization of Chemicals

The motors comply with the requirements of Registration, Evaluation and Authorization of Chemicals (REACH).

China RoHS

The motors comply with the requirements of China RoHS.

Quality systems

Siemens employs a quality management system that meets the requirements of ISO 9001 and ISO 14001.

Taking back and recycling waste electrical and electronic equipment (WEEE)

The motors comply with the requirements laid down in Directive 2012/19/EU with regard to returning and recycling scrap electrical and electronic equipment.

China Energy Label

The following table specifies the China Energy Label requirements that the SIMOTICS S-1FL2 motor must comply with.

Table 3-19 Motors requiring China Energy Label

Name of China National Standard	Minimum allowable values of energy efficiency and energy efficiency grades for permanent magnet synchronous motors (GB 30253-2024)
Date of entry into force	January 1, 2026
Affected motors	Permanent-magnet synchronous motors with a rated power of 0.55 kW to 1250 kW and a rated speed of 45 r/min to 6000 r/min, driven by variable-frequency equipment with a power supply of 1140 V or below
Motor requirements	As of the implementation date of the Standard, all motors involved must have the China Energy Label

Certificates for download

You can find all relevant certificates via the ID link embedded in the QR code on the rating plate of the motor.

3.5.3 Directives and standards for the MOTION-CONNECT cable

The following directives and standards are relevant for the MOTION-CONNECT cables:

European Low Voltage Directive

The MOTION-CONNECT cables fulfill the requirements stipulated in the Low-Voltage Directive 2014/35/EU, if they are covered by the application area of this directive.

European RoHS Directive

The MOTION-CONNECT cables comply with Directive 2011/65/EU regarding limiting the use of certain hazardous substances.

Underwriters Laboratories (North American market)

The MOTION-CONNECT cables provided with the test symbol displayed fulfill the requirements stipulated for the North American market.

UKCA certification

The MOTION-CONNECT cables comply with the requirements for the market in Great Britain (England, Wales and Scotland).

Eurasian Conformity

The MOTION-CONNECT cables comply with the requirements of the Russia/Belarus/Kazakhstan customs union (EAC).

Registration, Evaluation and Authorization of Chemicals

The MOTION-CONNECT cables comply with the requirements of Registration, Evaluation and Authorization of Chemicals (REACH).

China RoHS

The MOTION-CONNECT cables comply with the requirements of China RoHS.

Quality systems

Siemens employs a quality management system that meets the requirements of ISO 9001 and ISO 14001.

Taking back and recycling waste electrical and electronic equipment (WEEE)

The MOTION-CONNECT cables comply with the requirements laid down in Directive 2012/19/EU with regard to returning and recycling scrap electrical and electronic equipment.

Certificates for download

You can find all relevant certificates via the ID link embedded in the QR code on the cable packaging.

3.6 Device disposal

Description

For environmentally-friendly recycling and disposal of your old device, contact a company certified for the disposal of waste electrical and electronic equipment, and dispose of the old device as prescribed in the respective country of use.

Application planning

4

4.1 Protection against the spread of fire

Description

The converter with degree of protection IP20 may be operated only in closed housings or in higher-level control cabinets with protective covers that are closed, and when all of the protective devices are used. The installation of the converter in a metal control cabinet or the protection with another equivalent measure must prevent the spread of fire and emissions outside the control cabinet.

4.2 Fault protection for the motor circuit

Description

The converter provides short-circuit protection at the motor output terminals.

The manufacturer's declaration describes the conditions regarding protection against electric shock in the event of an insulation failure in the motor circuit.

More information

You can find more information on the Internet: Manufacturer's declaration (https://support.industry.siemens.com/cs/ww/en/view/109476638)

4.3 Permissible mains supply network configurations for motors

Description

In combination with the drive system, the motors are generally certified for operation on TN and TT line systems with grounded neutral point and on IT line systems.

Observe the following requirements:

- For operation on IT line systems, the occurrence of the first fault between an active part and ground must be signaled by a monitoring device. According to IEC 60364-4-41, Siemens recommends that you remove the first fault as quickly as practically possible.
  Motor operation in such a fault situation can reduce the service life due to damage to the insulation system as a result of partial discharge.
- For 3 AC 380 V ... 480 V mains supply networks with a grounded line conductor, an isolating transformer with grounded neutral point (secondary side) needs to be considered between the mains supply and the drive system to protect the motor insulation from excessive stress. For more information, see Section "Line connection conditions for the converter with the motor 1FL2 (Page 88)".

4.4 Line connection conditions for the converter with the motor 1FL2

Description

The drive system is designed for connection to grounded TN/TT and non-grounded IT mains supply networks.

Depending on the motor/converter combination and the planned installation altitude, the following constraints must be taken into account regarding the line connection.

Table 4-1 Line connection conditions for the converter with the motor 1FL2

Motor	Converter input voltage	Permissible line system configurations for installation altitude no higher than 2000 m	Permissible line system configurations for installation between 2000 m and 4000 m
200 V	1 AC 200 V ... 240 V (-15% ... +10%)	• TN and TT line systems with grounding at any potential • IT line systems*)	Install an isolating transformer and ground the secondary side at any potential.
200 V	3 AC 200 V ... 240 V (-15% ... +10%)	• TN and TT line systems with grounding at any potential • IT line systems*)	• TN and TT line systems with grounded neutral point • IT line systems with an isolating transformer with grounded neutral point (secondary side)
400 V	3 AC 380 V ... 480 V (-15% ... +10%)	• TN and TT line systems with grounded neutral point • IT line systems*)	For line systems without grounded neutral point and the input voltage > 465 V, install an isolating transformer and ground the secondary side at the neutral point.

*) With the screw for functional grounding removed. For more information, see Section "Removing the screw for functional grounding when operated on IT line system (Page 89)".

NOTICE

Damage to motor insulation due to excessive voltages

In the event of a ground fault in the IT line system, the motor insulation can be damaged by the higher voltage to ground.

- Use a ground fault monitor.
- Eliminate the ground fault as quickly as possible.

4.5 Removing the screw for functional grounding when operated on IT line system

Overview

When connecting the converter to an IT line system, you must remove the screw for functional grounding.

Requirement

Switch off the converter power supply.

⚠ CAUTION

Damage to the converter when connected to an IT line system

The converter will be damaged if it is operated on an IT line system without removing the grounding screw.

- Remove the grounding screw from the converter when operating the converter on an IT line system.

⚠ WARNING

Electric shock as a result of a residual charge in power components

After the power supply has been switched off, it takes up to 5 minutes until the capacitors in the converter have discharged so that the residual charge is at a non-hazardous level. Touching live components can result in death or severe injury.

- Check that there is absolutely no voltage between any of the power connections, or between them and the protective conductor connection.

Procedure

Figure 4-1 Removing the screw for functional grounding

Proceed as follows to remove the grounding screw from the converter:

1. Open the protective flap at the converter housing, e.g. using a slotted screwdriver.
2. Release the screw for functional grounding and remove it.

4.6 Minimum cross-section of the protective conductors

Overview

A high leakage current flows through the protective conductor in converter operation. For reliable touch protection during operation, the protective conductor of the converter must not be interrupted. This primarily results in requirements for the minimum conductor cross-section of the protective conductor.

No restriction applies to the length of the protective conductor for touch protection; however, short protective conductors are advantageous for EMC-compliant installation.

Description

WARNING

Electric shock due to interrupted protective conductor

The drive components conduct a high leakage current via the protective conductor. Touching conductive parts when the protective conductor is interrupted can result in death or serious injury.

- Comply with the requirements for the protective conductor.

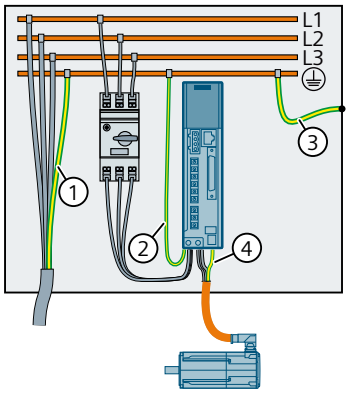

① **Protective conductor for the mains supply cable**

The protective conductor must be dimensioned in compliance with local installation rules for equipment with high leakage currents (for example, IEC 61800-5-1).

The minimum cross-section of the protective conductor depends on the cross-section of the line conductor of the mains supply cable:

Cross-section of line conductor of the mains supply cable S in mm²	Minimum cross-section of the protective conductor[1)]
S ≤ 16 mm²	S
16 mm² < S ≤ 35 mm²	16 mm²

Cross-section of line conductor of the mains supply cable S in mm²	Minimum cross-section of the protective conductor[1)]
S > 35 mm²	S/2
[1)] The provided values are valid only if the protective conductor is made of the same material as the line conductor.	

Additionally, one or more of the following conditions must be satisfied:

- The protective conductor is routed so that along its complete length it is protected against mechanical damage.
  Cables routed inside electrical cabinets or enclosed machine housings are considered to be adequately protected against mechanical damage.
- The protective conductor has a cross-section ≥ 10 mm² Cu.
  For a cross-section < 10 mm² copper, a second protective conductor with the same cross-section is provided.
- When establishing the connection using an industrial plug connector according to IEC 60309, the protective conductor of a multi-conductor cable must have a cross-section ≥ 2.5 mm² Cu.
- The protective conductor of a multi-conductor cable has a cross-section ≥ 2.5 mm² Cu.

② **Protective conductor of the converter line supply cable**

The protective conductor must be dimensioned in compliance with local installation rules.

- If each converter is individually protected, the protective conductor with the same cross-section must be routed in the same way as the line connection cable to the converter.

③ **Protective conductor between PE and control cabinet**

The cable cross-section must be dimensioned in compliance with local installation rules.

④ **Protective conductor of the motor power cable**

The protective conductor has the same cross-section as the line conductor of the motor power cable.

4.7 Configuring the braking resistor

4.7.1 Internal braking resistor

Description

An internal braking resistor is designed in the converter (excluding S200 Basic PTI FSA and FSB and S200 PTI FSA (0.1 kW)) to absorb regenerative energy from the motor. The table below shows the information of the internal braking resistor:

Table 4-2 Internal braking resistor of the SINAMICS S200 converter product line (PTI version)

Frame size	Resistance (Ω)	Maximum continuous power (P_{cont_int}) (W)	Maximum peak power (P_{max_int}) (W)	Maximum braking energy (E_{max_int}) (J)
1 AC/3 AC, 200 V ... 240 V				
FSA (0.2 kW)	200	8	373	63
FSB (0.4 kW)	100	16	742	123
FSC (0.75 kW, 1 kW)	50	30	1884	292
3 AC, 380 V ... 480 V				
FSA (0.2 kW, 0.4 kW)	500	14	754	210
FSB (0.75 kW, 1.0 kW)	160	15	2312	637
FSC (1.75 kW, 2.5 kW)	70	30	5086	1137
FSD (3.5 kW, 5.0 kW, 7.0 kW)	27	65	9896	1948

More information

For more information about connecting the braking resistor, see Section "Connecting the braking resistor (Page 154)".

4.7.2 External braking resistor

4.7.2.1 Overview

Description

If the motor feeds back more energy than can be dissipated by the internal braking resistor, or when you use a converter without the internal braking resistor, you will require an external braking resistor. You can select a suitable external braking resistor according to your calculation result for the specific application.

When selecting a braking resistor, you must take into account the factors such as load inertia, deceleration time, speed variation, and braking period according to your specific application and technology.

Note

The resistance of the selected external braking resistor must not be lower than the resistance of the internal braking resistor for each frame size. For the minimum resistance applicable to 200 V converter FSA (0.1 kW), refer to the resistance of the internal braking resistor for FSA (0.2 kW).

⚠ WARNING

Risk of fire caused by continuous overload

An explosion or a fire could occur if the external braking resistor is continuously overloaded (for example as the result of a defective Braking Unit). This can result in severe injury or death and/or the enclosure could melt.

- Use only braking resistors that are intrinsically safe.

NOTICE

Damage to the converter due to its maximum load being exceeded

If the maximum permissible continuous power, peak power or braking energy is exceeded, the converter may be damaged.

- Only ever operate the converter within its maximum permissible working range.

More information

For more information about connecting the braking resistor, see Section "Connecting the braking resistor (Page 154)".

For the technical data and characteristics of the 1FL2 motors, see Section "Technical data and characteristics of the 1FL2 (Page 592)".

For more information about selecting a motor, see Section "Motor selection (Page 903)".

4.7.2.2 Selection and calculation

Load cycle for the braking resistor

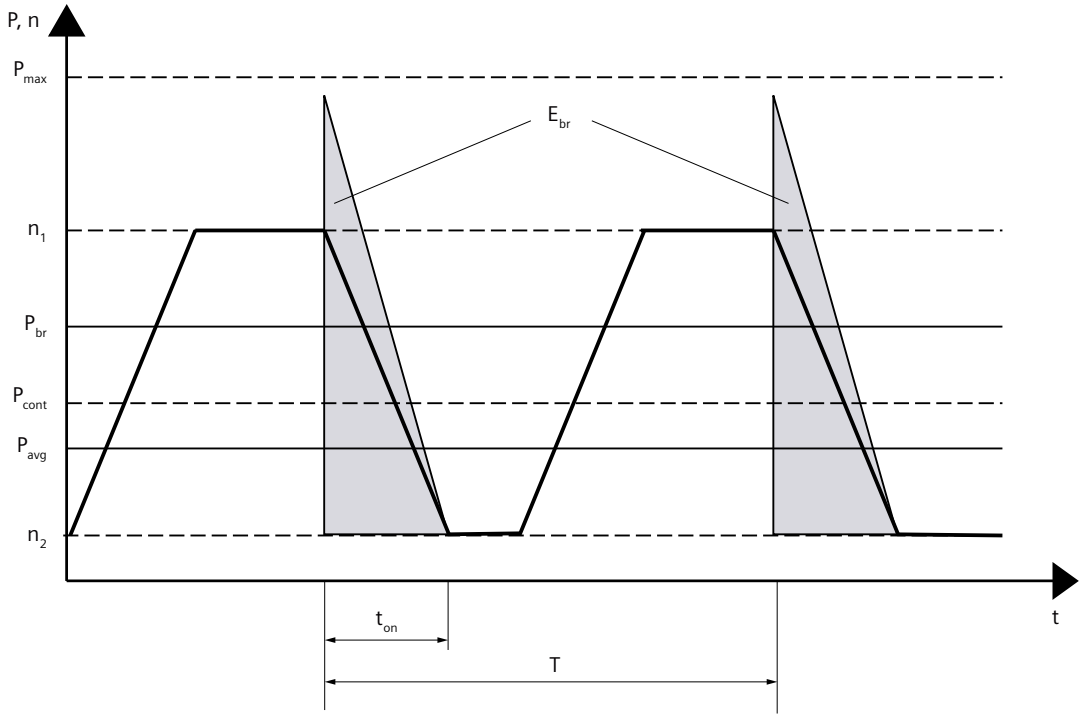

P_{max} [W]: Maximum peak power
P_{cont} [W]: Maximum continuous power
P_{br} [W]: Application-specific braking power
P_{avg} [W]: Application-specific average braking power
E_{max} [J]: Maximum braking energy
E_{br} [J]: Application-specific braking energy
t_{on} [s]: Braking duration
T [s]: Cycle duration
n_1 [r/min]: Initial speed
n_2 [r/min]: Speed after braking

P_{max_int} [W]: Maximum peak power of internal braking resistor
P_{max_ext} [W]: Maximum peak power of external braking resistor
P_{cont_int} [W]: Maximum continuous power of internal braking resistor
P_{cont_ext} [W]: Maximum continuous power of external braking resistor
E_{max_int} [J]: Maximum braking energy of internal braking resistor
E_{max_ext} [J]: Maximum braking energy of external braking resistor

Figure 4-2 Peak power, continuous power and duty cycle of the braking resistor

Selection criteria

The following conditions must be met simultaneously when selecting the braking resistor:

- The calculated braking energy required in the application E_{br} must not exceed the maximum braking energy E_{max}. If $E_{br} < E_{max_int}$, you don't require an external braking resistor. If $E_{br} > E_{max_int}$, you must use the external braking resistor. Select the external braking resistor with $E_{max_ext} > E_{br}$.
- The braking power required in the application P_{br} must not exceed the maximum peak power P_{max}. When using the internal braking resistor, if $P_{br} > P_{max_int}$, you can adjust the braking duration t_{on}. If the requirement ($P_{br} < P_{max_int}$) of the specific application still can not be satisfied, you must use the external braking resistor. Select the external braking resistor with $P_{max_ext} > P_{br}$.
- The average braking power required in the application P_{avg} (arithmetic mean of the braking cycle) must not exceed the maximum continuous power P_{cont}. When using the internal braking resistor, if $P_{avg} > P_{cont_int}$, you can adjust the braking cycle duration T. If the requirement ($P_{avg} < P_{cont_int}$) of the specific application still can not be satisfied, you must use the external braking resistor. Select the external braking resistor with $P_{cont_ext} > P_{avg}$.

You can find the resistance data of the internal braking resistor for each frame size in Section "Internal braking resistor (Page 93)".

Calculating the braking energy, the braking power, and the average braking power

To find out whether you require an external braking resistor, proceed the following calculations:

- Calculate the braking energy according to the following formula:

$$E_{br} = \frac{1}{2}(J_{mot} + J)\frac{4\pi^2}{3600}(n_1^2 - n_2^2)$$

Note

As the friction is not taken into account in the above formula, less energy is fed back to the servo drive system in practice than that calculated in the formula.

- Calculate the braking power according to the following formula:
  $P_{br} = E_{br} / t_{on}$
- Calculate the average braking power according to the following formula:
  $P_{avg} = E_{br} / T$

E_{br} / J	Application-specific braking energy
J_{mot} / kgm²	Moment of inertia of the servo motor
J / kgm²	Moment of inertia of the driven mechanical system in relation to the shaft of the servomotor
n_1 / r/min	Initial speed
n_2 / r/min	Speed after braking
P_{br} / W	Application-specific braking power
P_{avg} / W	Application-specific average braking power

t_{on} / s Braking duration
T / s Cycle duration

Example for internal braking resistor application

A 1FL2104-4AG... servomotor with low moment of inertia (with integrated holding brake) with a mechanical system is fed from a SINAMICS S200 6SL5510-1BB11-0A□0. It is to be braked from 3000 r/min to 600 r/min with a braking duty cycle as t_{on} = 0.05 s, T = 2 s.

Moment of inertia of the servomotor 1FL2104-4AG... $J_{mot} = 0.71 \times 10^{-4}$ kgm²

Moment of inertia of the driven mechanical system $J = 4 \times 10^{-4}$ kgm²

n_1 = 3000 r/min n_2 = 600 r/min

⇒ E_{br} = 22.31 J < E_{max_int} = 292 J (1 J = 1 Ws)

⇒ P_{br} = 446.26 W < P_{max_int} = 1884 W

⇒ P_{avg} = 11.16 W < P_{cont_int} = 30 W

In this case, therefore, no external braking resistor is required.

Example for external braking resistor application

A 1FL2104-4AG... servomotor with low moment of inertia (with integrated holding brake) with a mechanical system is fed from a SINAMICS S200 6SL5510-1BB11-0A□0. It is to be braked from 6000 r/min to 600 r/min with a braking duty cycle as t_{on} = 0.05 s, T = 2 s.

Moment of inertia of the servomotor 1FL2104-4AG... $J_{mot} = 0.71 \times 10^{-4}$ kgm²

Moment of inertia of the driven mechanical system $J = 8 \times 10^{-4}$ kgm²

n_1 = 6000 r/min n_2 = 600 r/min

⇒ E_{br} = 170.21 J < E_{max_int} = 292 J (1 J = 1 Ws)

⇒ P_{br} = 3404.18 W > P_{max_int} = 1884 W

⇒ P_{avg} = 85.10 W > P_{cont_int} = 30 W

In this case, therefore, an external braking resistor is required. Select the external braking resistor according to the following table.

Frame size	Resistance (Ω)	Continuous power (W)	Peak power (W)	Braking energy (J)
FSC (1 kW)	≥ 50	> 85.10	> 3404.18	> 170.21

4.7.2.3 Recommended data of external braking resistors

Technical data

Note

The following data of external braking resistors is calculated theoretically based on the drive system's permissible overload capacity, the maximum motor speed, and the maximum load inertia specified in this document.

Siemens recommends that you calculate the actual resistor values using the formula provided in Section "Selection and calculation (Page 95)" according to your practical application.

Table 4-3 Recommended data of external braking resistors

Frame size	Minimum resistance (Ω)	Maximum continuous power (P_{cont_ext}) (W)	Maximum peak power (P_{max_ext}) (W)	Maximum braking energy (E_{max_ext}) (J)
1 AC/3 AC, 200 V ... 240 V				
FSA (0.2 kW)	200	60	1510	160
FSB (0.4 kW)	100	110	2730	280
FSC (0.75 kW, 1 kW)	50	260	6560	660
3 AC, 380 V ... 480 V				
FSA (0.2 kW, 0.4 kW)	500	120	2950	300
FSB (0.75 kW, 1.0 kW)	160	500	12750	1280
FSC (1.75 kW, 2.5 kW)	70	650	16800	1680
FSD (3.5 kW, 5.0 kW, 7.0 kW)	27	730	18900	1890

4.8 Electromagnetic compatibility (EMC)

4.8.1 Electromagnetic compatibility (EMC)

Description

Interference suppression measures increase the electromagnetic compatibility (EMC).

EMC interference suppression measures allow the device to function correctly. As a consequence, the device is neither a source of interference for other devices nor an interference sink that can be disturbed by other devices.

More information

Fundamental information for EMC-compliant planning and EMC-compliant installation is provided in the Internet:

EMC Design Guidelines Configuration Manual (https://support.industry.siemens.com/cs/ww/en/view/60612658)

4.8.2 Harmonic current emissions

Overview

IEC 61800-3 does not define any current harmonic limits when converters are operated on light industrial line supplies. A system evaluation according to IEC 61000-3-14 or IEC 61800-3 Annex B.4 is recommended.

Description

When operated with rated power, the converter generates the following typical current harmonics:

Table 4-4 Typical harmonic currents of the converter, 1 AC 200 V

200 V converter	Typical harmonic current (A) at U_k 4%								
	5th	7th	11th	13th	17th	19th	23rd	25th	THC
FSA	0.57	0.42	0.16	0.07	0.10	0.10	0.07	0.04	1.05
FSB	0.55	0.44	0.22	0.11	0.05	0.06	0.05	0.02	1.04
FSC	0.19	0.18	0.15	0.10	0.04	0.03	0.01	0.02	0.43

THC = Total Harmonic Current: sum of all harmonic currents

Table 4-5 Typical harmonic currents of the converter, 3 AC 200 V

200 V converter	Typical harmonic current (A) at U_k 4%								
	5th	7th	11th	13th	17th	19th	23rd	25th	THC
FSA	0.18	0.13	0.08	0.05	0.04	0.02	0.02	0.02	0.26
FSB	0.94	0.66	0.19	0.08	0.15	0.13	0.07	0.07	1.2
FSC	2.37	1.64	0.40	0.22	0.34	0.25	0.10	0.13	2.97

THC = Total Harmonic Current: sum of all harmonic currents

Table 4-6 Typical harmonic currents of the converter, 3 AC 400 V

400 V converter	Typical harmonic current (A) at U_k 4%								
	5th	7th	11th	13th	17th	19th	23rd	25th	THC
FSA	0.38	0.31	0.24	0.29	0.34	0.29	0.30	0.29	1.03
FSB	1.11	0.79	0.74	0.87	0.80	0.72	0.75	0.74	2.56
FSC	3.05	2.08	2.11	2.40	2.10	1.80	1.66	1.47	6.17
FSD	5.69	3.29	4.42	4.58	2.81	2.47	1.86	1.26	10.27

THC = Total Harmonic Current: sum of all harmonic currents

4.8.3 EMC limit values in South Korea

Description

이 기기는 업무용(A 급) 전자파적합기기로서 판매자 또는 사용자는 이 점을 주의하시기 바라며, 가정외의 지역에서 사용하는 것을 목적으로 합니다.
For sellers or users, please keep in mind that this device is an A-grade electromagnetic wave device. This device is intended to be used in areas other than home.

The EMC limit values to be observed for Korea correspond to the limit values of the EMC product standard for variable-speed electric drives EN 61800-3 of category C2 or the limit value class A, Group 1 to KN11.

By implementing appropriate additional measures, the limit values according to category C2 or limit value class A, Group 1, are observed.

Additional measures, such as the use of an additional RFI suppression filter (EMC filter), may be necessary.

In addition, measures for EMC-compliant configuration of the plant or system are described in detail in this manual.

The final statement on compliance with the applicable standard is given by the respective label attached to the individual device.

4.9 EMC-compliant installation

4.9.1 Shielded cables for the converter

Description

The following cables must be shielded to comply with EMC regulations:

- In the control cabinet:
  - Cable between the converter and an external line filter
  - Cable between the converter and the motor
  - Cable between the converter and an external braking resistor
  - Signal and data cables
- Outside the control cabinet, all cables with the exception of the line supply cable

To achieve EMC-compliant installations of the converter, connect the shields of the power cable to the shield plate via the shield clamps. The shield plate is shipped with the converter.

For better EMC effects, Siemens recommends that you strip the brake cable, encoder cable, and setpoint cable, and connect the cable shields to earth. Make sure that the shield plate, the converter and the motor are properly grounded.

1. Remove the insulation and expose the cable shield.
2. Connect shields.
   - Connect shields of the brake cable and encoder cable to the shield plate (A).
   - Connect shield of the setpoint cable to the mounting plate (B). Make sure the mounting plate is well grounded.

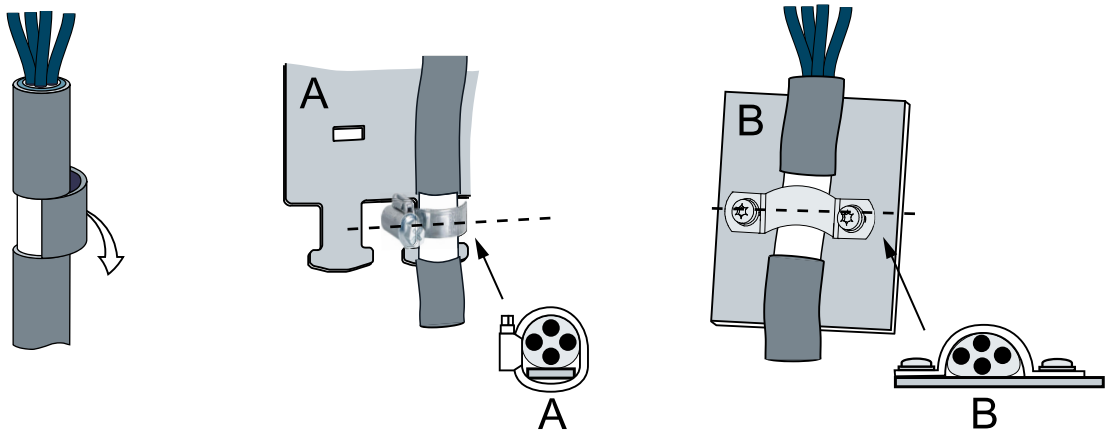

Figure 4-3 Recommended EMC-compliant shield connection

4.9.2 Achievable EMC category

Overview

The servo drive system has been tested in accordance with the emission requirements of IEC 61800-3 Category C2.

- For a radiated emission test, an external line filter (between the mains supply network and the converter) is required to meet the EMC requirements. The converter needs to be installed inside a shielded metallic cabinet, while other parts of the motion control system (including the PLC, DC power supply, spindle drive, and motor) need to be put outside the shielded cabinet.
- For a conductive emission test, an external line filter (between the mains supply network and the converter) is required to meet the EMC requirements.
- For the radiated emission and conductive emission tests, the length of the line supply cable between the line filter and the converter must be shorter than 1 m.

Description

The achievable EMC category is dependent on the motor cable length and the line system configuration. The following conditions apply to the possible application environment.

Requirements		**Achievable EMC Category**	
		C2	**C3**
Converter		With line filters C2	With line filters C2 or C3
Maximum permissible cable length	Motor	30 m shielded	30 m shielded
	Line filter to the converter	1 m	1 m
Permissible application environment	Residential	No	No
	Light industrial	Yes	Yes
	Commercial	Yes	Yes
Permissible line system	Public	No	No
	Non-public	Yes	Yes
Line system configuration		TN or TT line system with a grounded neutral point	TN or TT line system with a grounded neutral point

Note

This device is not intended for use in residential environments and might not provide adequate protection to radio reception in such environments.

Mounting 5

5.1 Converter

⚠ WARNING

Spread of fire

In the event of a fault, a converter with an open design (built-in devices) can cause a fire or a pressure wave, which can result in severe personal injury and material damage. The higher the power rating of a converter, the more dangerous the effects of an arc or pressure wave.

- Install the converter in a robust metal control cabinet that is designed to prevent fire from escaping.
- Only operate the converter with the control cabinet doors closed.
- When control cabinet doors are open, only qualified electrical personnel are allowed to carry out service and maintenance work.
- Comply with the minimum control cabinet volume.

Information on the minimum control cabinet volume is available on the Internet:

Protective devices for SINAMICS S200 product line (https://support.industry.siemens.com/cs/ww/en/view/109823555)

5.1.1 Mounting instructions for the converter

Description

Observe the conditions listed below in order to guarantee reliable, continuous and trouble-free operation:

- The converter is designed for installation in a control cabinet.
- The converter is certified for use in environments with degree of pollution 2 without condensation; i.e. in environments where no conductive pollution/dirt occurs. Condensation is not permissible.
- The converter fulfills degree of protection IP20 according to IEC 60529.
- Ensure that all converters and cabinets are grounded according to Section "EMC-compliant installation (Page 101)".

- Use a conductive steel sheet with a thickness of not less than 2 mm as the mounting plate.
- The converter supports vertical mounting only. Mount the converter vertically with the integrated operator panel at the top.

Note

Keep the front flap of the integrated operator panel closed to protect the control buttons and the memory card.

Protection against condensation and conductive pollution

Protect the converter with degree of protection IP20 by installing it in a control cabinet with degree of protection IP54 according to IEC 60529 or NEMA 12 for example. Further measures may be necessary for particularly critical operating conditions.

If condensation or conductive pollution can be excluded at the installation site, a lower degree of control cabinet protection is permitted.

5.1.2 Mounting position

Description

NOTICE
Overheating due to impermissible mounting position The converter can overheat and therefore be damaged if mounted in an impermissible position. • Only mount the converter in a permissible position.

The converter supports vertical mounting only. Mount the converter vertically with the integrated operator panel at the top.

Figure 5-1 Converter mounting orientation

5.1.3 Dimension drawings and drilling dimensions

5.1.3.1 Dimension drawing and drilling dimensions for the 200 V converter

Dimension drawing

All dimensions are specified in millimeters.

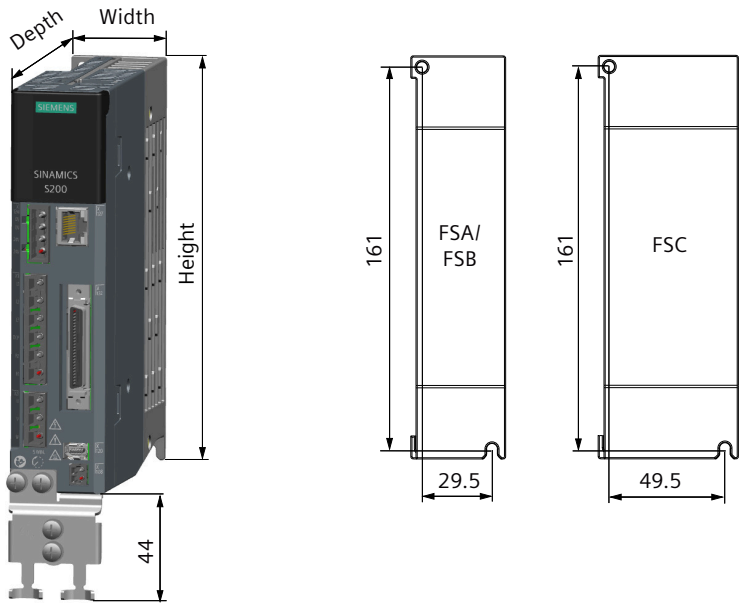

Table 5-1 Dimensions and mounting, 1 AC/3 AC 200 V, FSA ... FSC, IP20

Frame size	Width	Height	Depth	Fixing
FSA	40 mm	170 mm	135 mm	2 x M4 / 2.5 Nm
FSB	40 mm	170 mm	170 mm	
FSC	60 mm	170 mm	195 mm	

5.1.3.2 Dimension drawing and drilling dimensions for the 400 V converter

Dimension drawing

All dimensions are specified in millimeters.

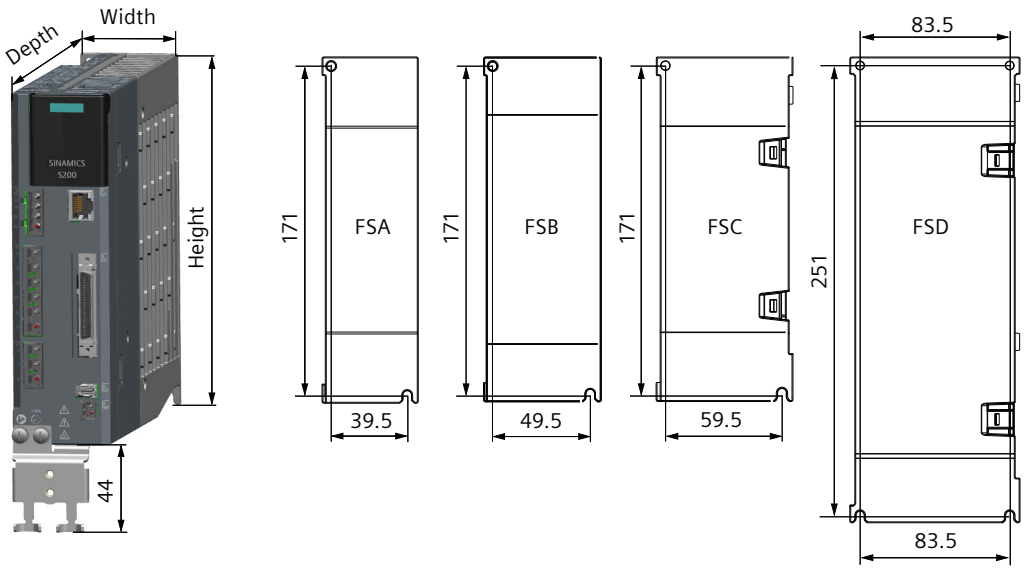

Table 5-2 Dimensions and mounting, 3 AC 400 V, FSA ... FSD, IP20

Frame size	Width	Height	Depth	Fixing
FSA	50 mm	180 mm	200 mm	2 x M4 / 2.5 Nm
FSB	60 mm	180 mm	200 mm	
FSC	70 mm	180 mm	200 mm	
FSD	95 mm	260 mm	230 mm	4 x M4 / 2.5 Nm

5.1.4 Minimum clearances

Description

Observe the following minimum mounting clearances. For converters without built-in fans, install cooling fans above the converters for sufficient heat dissipation.

Note

For converters without built-in fans, when the surrounding temperature in the cabinet is ≥ 45 °C (for 200 V FSA: ≥ 40 °C), the airflow velocity above the converters must be greater than 0.5 m/s.

All dimensions are specified in millimeters.

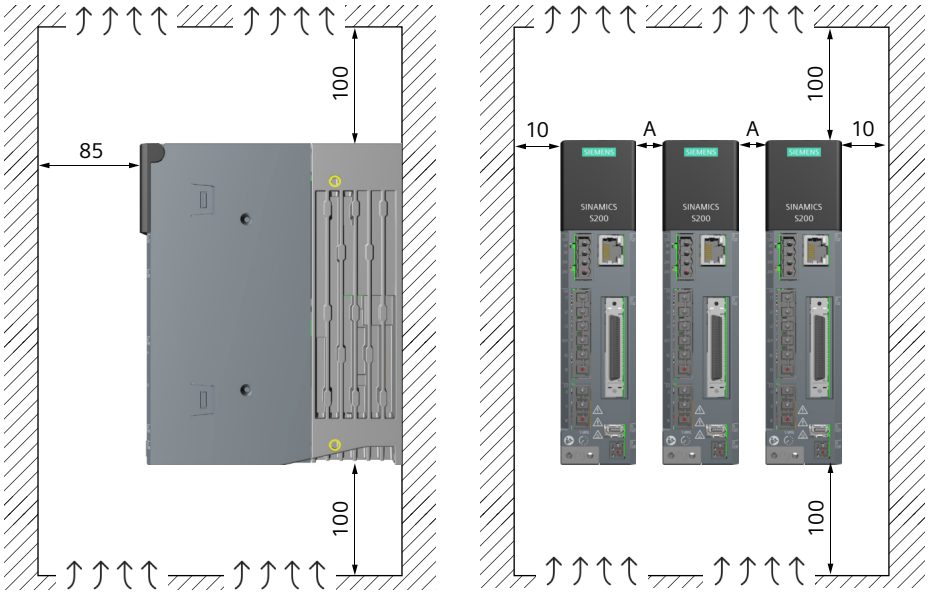

Table 5-3 Minimum clearances to other devices or components

	Single-converter installation	Side-by-side installation
Minimum clearance at top and bottom	100 mm	100 mm
Minimum clearance at front	85 mm	85 mm
Minimum lateral clearance (A) between multiple converters	-	200 V converter: 1 mm 400 V converter: 10 mm A mixture of 200 V and 400 V converters: 10 mm
Minimum lateral clearance to other devices	10 mm	10 mm

5.2 Motor

5.2.1 Transporting and lifting

Note

Comply with the local national regulations for the transportation of motors.

Requirement

- Use suitable load suspension devices when transporting and installing the motor.
- Do not lift the motor by the connector.
- Transport the motor carefully.

Procedure

Lifting and transporting the motor using slings

For the following motors weighing over 10 kg, you can lift and transport the motor using lifting slings:

- 1FL2306-2AC with brake
- 1FL2306-4AC with brake
- 1FL2306-6AC
- 1FL2306-7AC
- 1FL2310

WARNING

Incorrectly dimensioned or incorrectly used lifting slings

If lifting slings are incorrectly dimensioned or incorrectly used, the motor can fall and cause death, severe injury and/or damage to property.

- Only use lifting slings that are suitable for the weight of the motor.
- Attach the lifting slings as shown in the figure "Lifting and transporting with lifting slings".

Figure 5-2 Lifting and transporting with lifting slings (example diagram)

Lifting and transporting the motor using eyebolts

The 1FL2310 motor (SH90) has two M8 threaded holes for screwing in two eyebolts. You can use eyebolts and a crossbar for lifting and transporting the motor.

WARNING

Incorrect or unused lifting points

Due to incorrect or unused lifting points, the motor can fall and cause death, severe injury and/or damage to property.

- Only lift and transport larger motors using the eyebolts.
- Completely screw in the eyebolts and tighten by hand (approx. 10 Nm, or according to your specific requirement).
- Do not use bent or damaged eyebolts.
- Only use eyebolts with laminated fiber washers.
- Loads applied transversely to the plane of the eyebolts are not permitted.

1. Screw in the eyebolts.

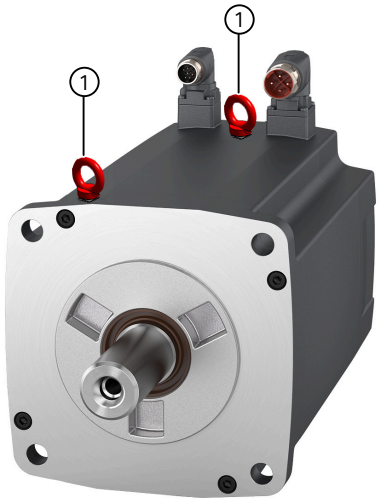

① Position of the eyebolts

2. Hook the crossbar into the eyebolts.

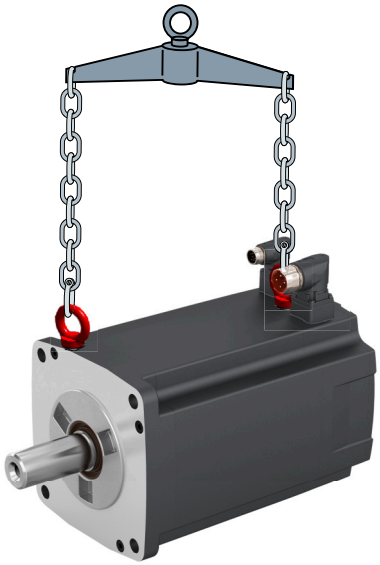

Figure 5-3 Lifting and transporting with a crossbar (example diagram)

3. Set the motor down on a hard, level surface.

⚠ WARNING

Danger of severe injury due to unintentional movements of the motor

If the motor is not secured after being set down, unintentional movements of the motor can cause serious injury.

- After the motor has been set down, secure it in position.
- Do not release the lifting devices until the motor has been secured in position.

4. Secure the motor against unintentional movements.

5.2.2 Checklist prior to mounting

Description

The checklist below is a minimum benchmark and must be performed in any case. Further checks before, during, and after the installation of the motor depend on the system-specific conditions and are the responsibility of the plant or system manufacturer.

Table 5-4 Checklist before installing

Check	OK
General checks	
Are the environmental conditions in the permissible range?	
Checks regarding the mechanical system	
Is the motor free of visible damage?	
Have the mounting surfaces such as the flange and shaft on the customer machine and on the motor been cleaned?	
Are the mounting surfaces free of corrosion?	
Do the mounting dimensions such as the shaft diameter, shaft length, and radial eccentricity on the customer machine meet the specifications?	

5.2.3 Safety labels on the motor

Description

NOTICE
Damage to the encoder due to shocks Shocks at the motor shaft extension can cause an encoder damage. • Do not exert any shock at the shaft extension.

In the delivery state, the following two warning labels are attached to the motor.

	"Hot surface" warning label
	"No shocks at the shaft extension" warning label

5.2.4 Mounting instructions for the motor

Description

NOTICE
Damage to shaft sealing rings caused by solvent If shaft sealing rings come into contact with solvents when preservation coating is removed, the shaft sealing rings can be damaged. • Avoid contact between solvents and shaft sealing rings.

NOTICE
Damage to the motor due to radial eccentricity at the shaft extension Radial eccentricity and axial forces at the shaft extension can damage the motor. • Mount the motor in such a way that no radial eccentricity and axial forces at the shaft extension occur.

- Adhere to the specifications on the rating plate (Page 48).
- Observe the warning and information plates on the motor.
- Check the installation site and permissible environmental conditions such as temperature and installation altitude. See Section "Permissible environmental conditions for the motor (Page 570)".
- Thoroughly remove any anti-corrosion agents from the shaft extension with commercially available solvents.
- Ensure that power losses are adequately dissipated. See Section "Cooling (Page 573)".
- If the motor is installed vertically with the shaft extension facing up, ensure that no liquid can enter the upper bearing.
- Ensure that the flange is in even contact with the mounting surface.
- Use hexagon socket head cap screws with a property class of at least 8.8.

- Avoid any uneven stressing when tightening the fastening screws.
- Observe the tightening torques for the fastening screws given in the following table.
  The general tolerance for the tightening torque is 10%. The tightening torque is based on a friction coefficient of $\mu = 0.14$.

Motor	Screw DIN 7984	Washer ISO 7092 (mm)	Tightening torque for screws (not for electrical connections)
1FL2102	M4	4 ($d_{2\,max} = 8$)	2.4 Nm
1FL2□03	M5	5 ($d_{2\,max} = 9$)	4.7 Nm
1FL2104 1FL2204 1FL2205	M6	6 ($d_{2\,max} = 11$)	8 Nm
1FL2105 1FL2304 1FL2306	M8	8 ($d_{2\,max} = 15$)	20 Nm
1FL2310	M12	12 ($d_{2\,max} = 20$)	85 Nm

5.2.5 Mounting position

Description

The 1FL2 motor supports flange mounting only. It can be installed in three orientations as shown in the following table.

Table 5-5 Type of construction according to IEC 60034-7

Designation	Representation	Description
IM B5	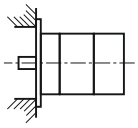	Standard
IM V1	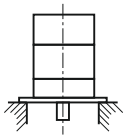	The motor can be used in types of construction IM V1 and IM V3 without restriction.
IM V3	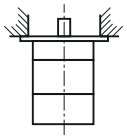	

Note

IM V3 type of construction

When configuring the IM V3 type of construction, pay attention to the permissible axial forces and especially to the necessary degree of protection.

5.2.6 Dimension drawings for motors

5.2.6.1 Dimension drawing for the 1FL2 motor, shaft height 20

Dimension drawing

All dimensions are specified in millimeters.

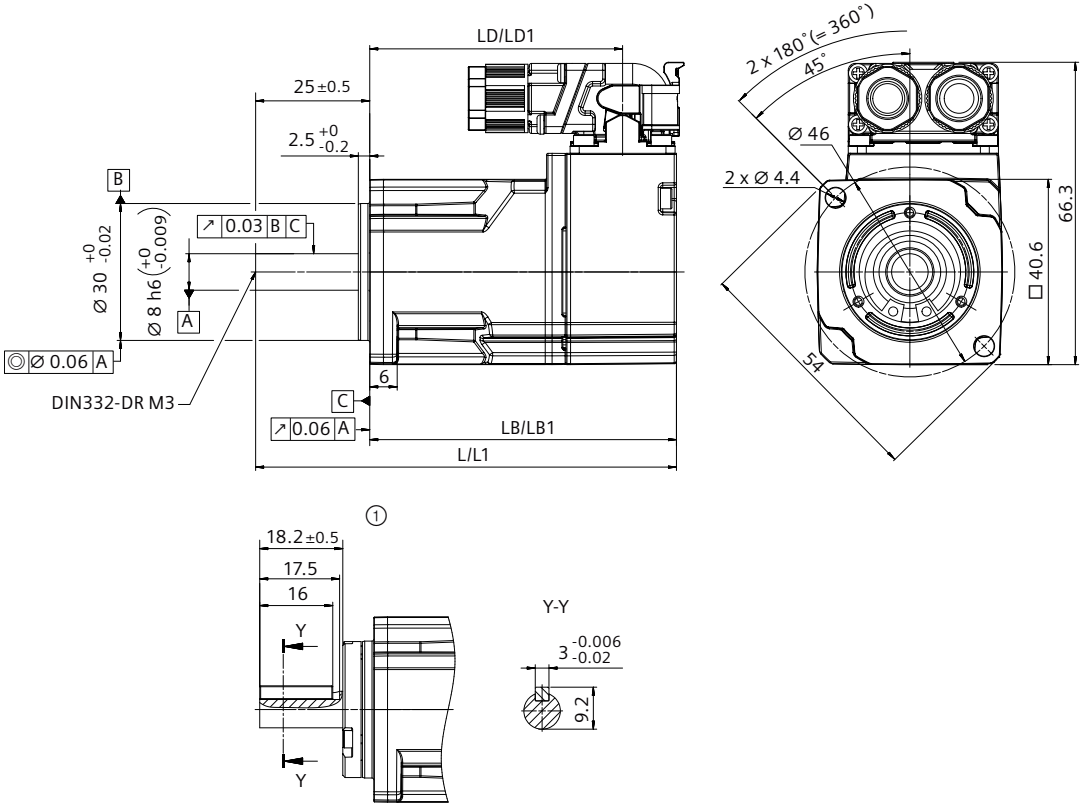

① With shaft sealing ring (IP65) and feather key

Table 5-6 Dimensions, 1FL2102

SIMOTICS S-1FL2 Shaft height 20	Motor length					
	Without brake			With brake		
	L	LB	LD	L1	LB1	LD1
1FL2102-2	92.2	67.2	55.7	121.9	96.9	85.4
1FL2102-4	105.2	80.2	68.7	134.9	109.9	98.4

5.2.6.2 Dimension drawing for the 1FL2 motor, shaft height 30

Dimension drawing

All dimensions are specified in millimeters.

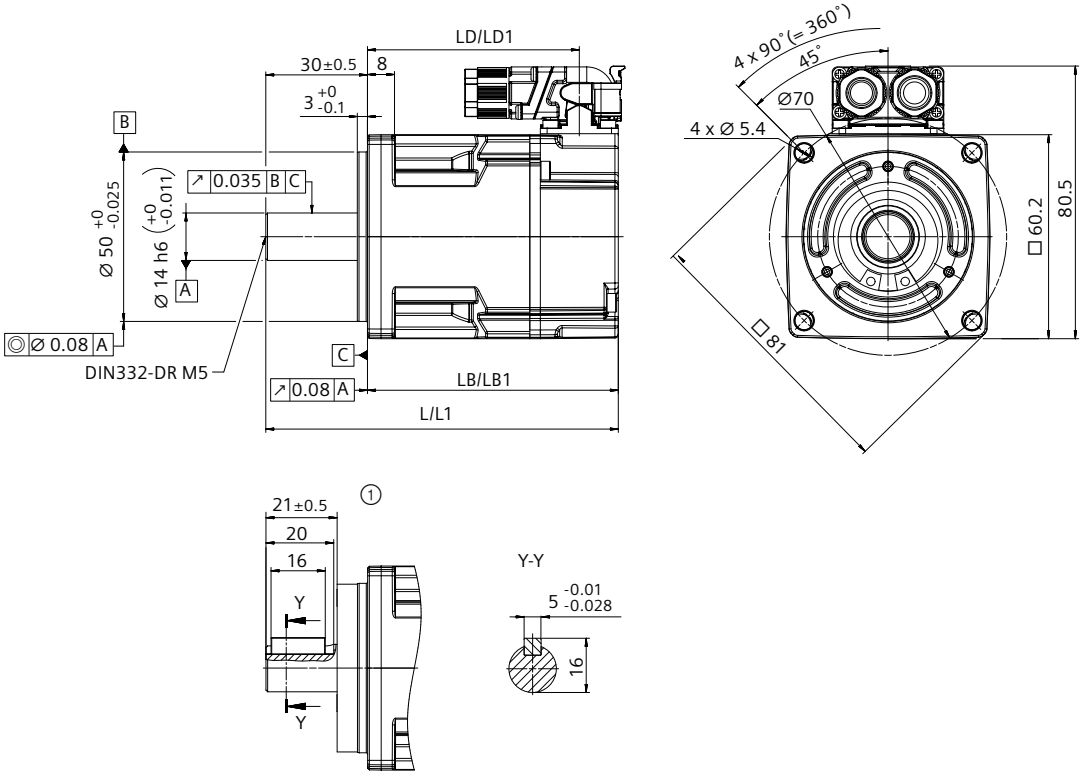

① With shaft sealing ring (IP65) and feather key

Table 5-7 Dimensions, 1FL2□03

SIMOTICS S-1FL2 Shaft height 30	Motor length					
	Without brake			With brake		
	L	LB	LD	L1	LB1	LD1
1FL2103-2	105.5	75.5	63.8	135.5	105.5	93.8
1FL2103-4	124.5	94.5	82.8	154.5	124.5	112.8
1FL2203-2	104	74	62.3	134	104	92.3
1FL2203-4	121.5	91.5	79.8	151.5	121.5	109.8

5.2.6.3 Dimension drawing for the 1FL2 motor, shaft height 40

Dimension drawing

All dimensions are specified in millimeters.

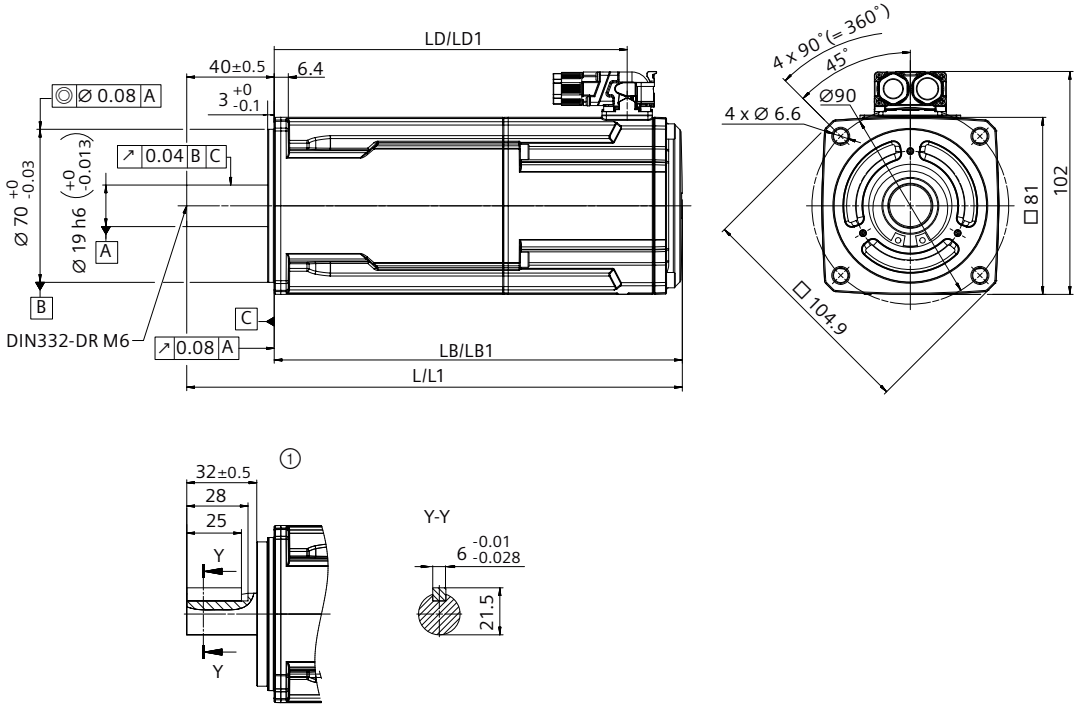

① With shaft sealing ring (IP65) and feather key

Table 5-8 Dimensions, 1FL2104-□A, 1FL2204-□A

SIMOTICS S-1FL2 Shaft height 40	Motor length					
	Without brake			With brake		
	L	LB	LD	L1	LB1	LD1
1FL2104-2A	164.6	124.6	99.4	208.6	168.6	143.4
1FL2204-2A						
1FL2104-4A	182.6	142.6	117.4	226.6	186.6	161.4
1FL2204-4A						

5.2.6.4 Dimension drawing for the 1FL2 motor, shaft height 40 (New)

Dimension drawing

All dimensions are specified in millimeters.

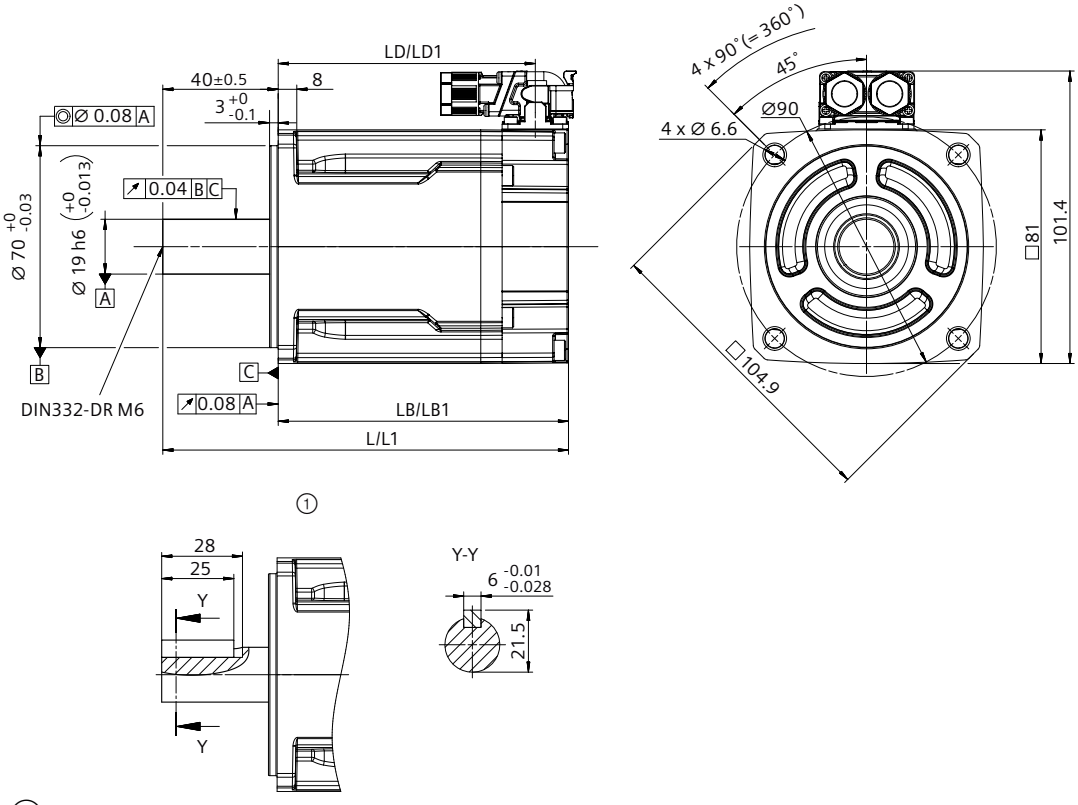

① With shaft sealing ring (IP65) and feather key

Table 5-9 Dimensions, 1FL2104-□B, 1FL2204-□B

SIMOTICS S-1FL2 Shaft height 40 (New)	Motor length					
	Without brake			With brake		
	L	LB	LD	L1	LB1	LD1
1FL2104-2B	140.6	100.6	89.1	180.6	140.6	129.1
1FL2204-2B						
1FL2104-4B	152.6	112.6	101.1	192.6	152.6	141.1
1FL2204-4B						

5.2.6.5 Dimension drawing for the 1FL2 motor, shaft height 45

Dimension drawing

All dimensions are specified in millimeters.

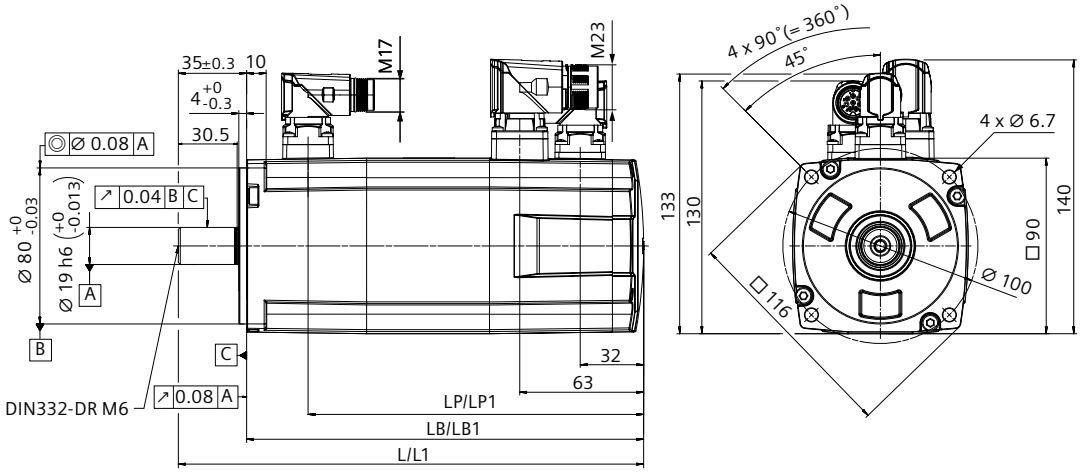

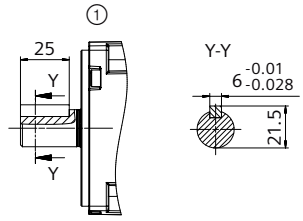

① With feather key

Table 5-10 Dimensions, 1FL2304

SIMOTICS S-1FL2 Shaft height 45	Motor length					
	Without brake			With brake		
	L	LB	LP	L1	LB1	LP1
1FL2304-2	192	157	/	238.5	203.5	172
1FL2304-4	239	204	/	285.5	250.5	219

5.2.6.6 Dimension drawing for the 1FL2 motor, shaft height 48

Dimension drawing

All dimensions are specified in millimeters.

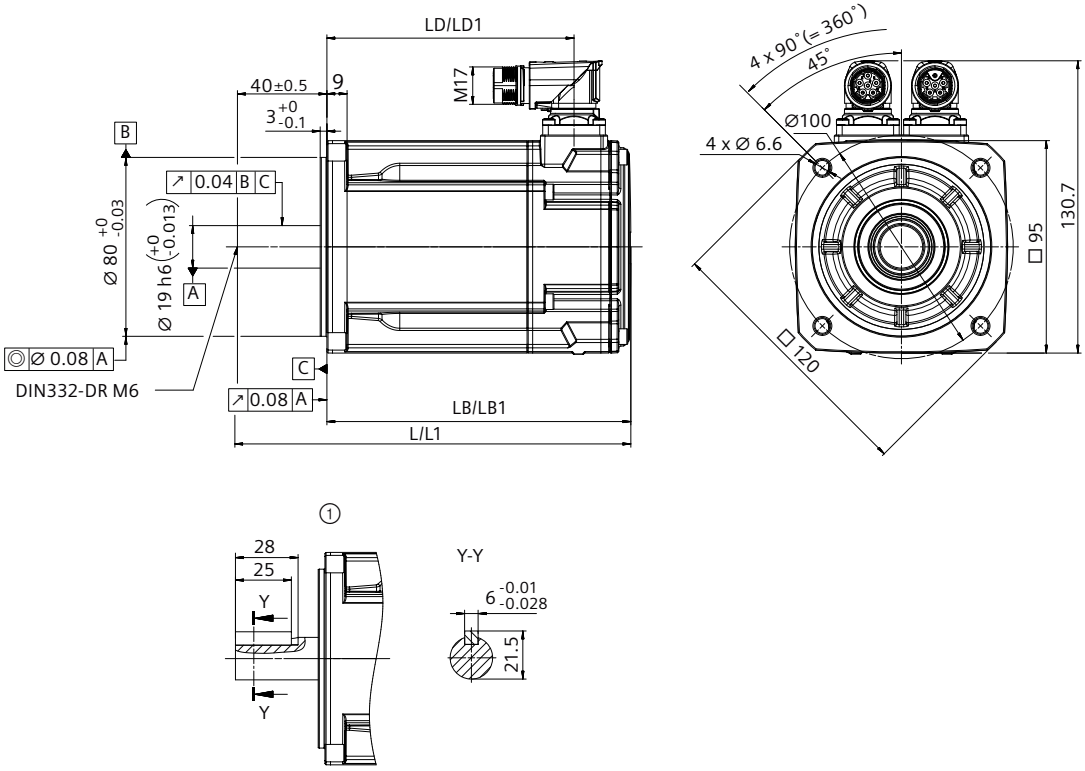

① With feather key

Table 5-11 Dimensions, 1FL2205

SIMOTICS S-1FL2 Shaft height 48	Motor length					
	Without brake			With brake		
	L	LB	LD	L1	LB1	LD1
1FL2205-2	175.9	135.9	110.5	218.9	178.9	153.5
1FL2205-4	207.9	167.9	142.5	250.9	210.9	185.5

5.2.6.7 Dimension drawing for the 1FL2 motor, shaft height 52

Dimension drawing

All dimensions are specified in millimeters.

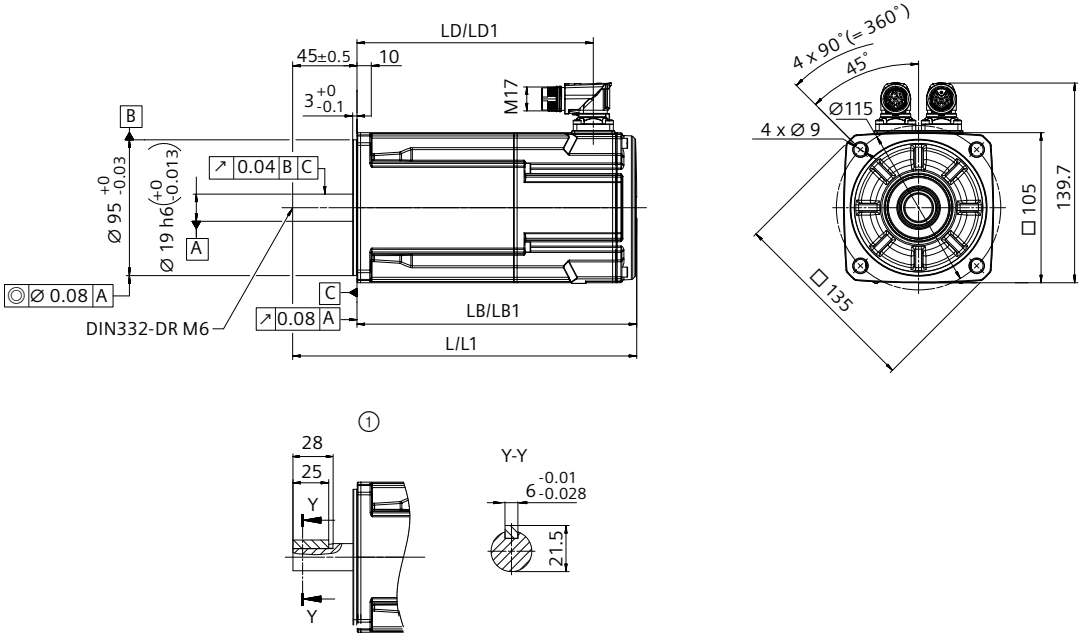

① With feather key

Table 5-12 Dimensions, 1FL2105

SIMOTICS S-1FL2 Shaft height 52	Motor length					
	Without brake			With brake		
	L	LB	LD	L1	LB1	LD1
1FL2105-2	213.9	168.9	138.5	240.7	195.7	165.3
1FL2105-4	255.9	210.9	180.5	282.7	237.7	207.3

5.2.6.8 Dimension drawing for the 1FL2 motor, shaft height 65

Dimension drawing

All dimensions are specified in millimeters.

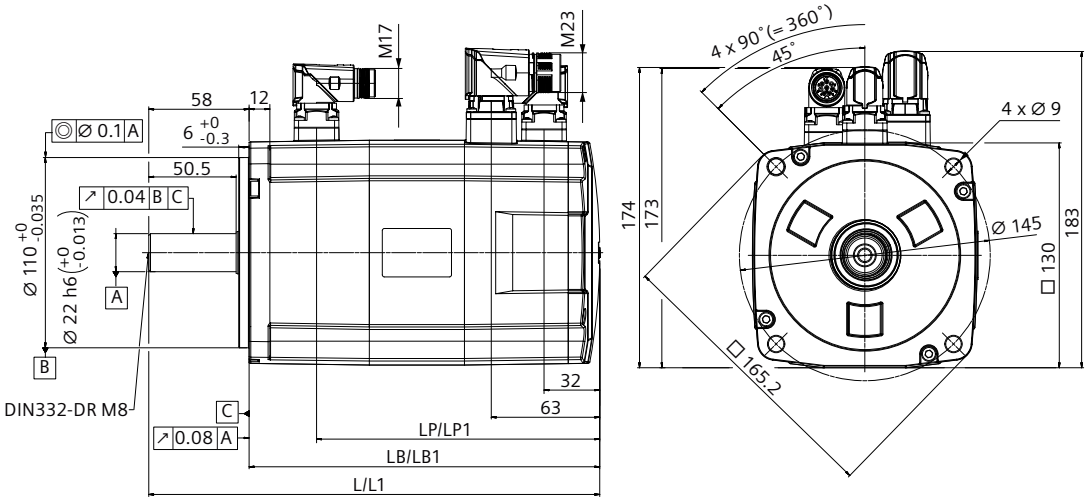

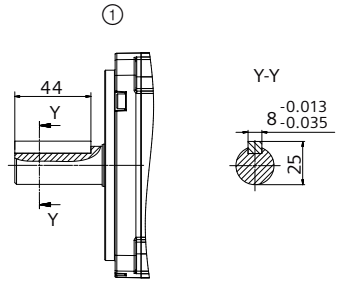

① With feather key

Table 5-13 Dimensions, 1FL2306

SIMOTICS S-1FL2 Shaft height 65	Motor length					
	Without brake			With brake		
	L	LB	LP	L1	LB1	LP1
1FL2306-1	206.2	148.2	/	260.7	202.7	163.7
1FL2306-2	222.7	164.7	/	277.2	219.2	180.2
1FL2306-4	239.2	181.2	/	293.7	235.7	196.7
1FL2306-6	272.2	214.2	/	326.7	268.7	229.7
1FL2306-7	305.2	247.2	/	359.7	301.7	262.7

5.2.6.9 Dimension drawing for the 1FL2 motor, shaft height 90

All dimensions are specified in millimeters.

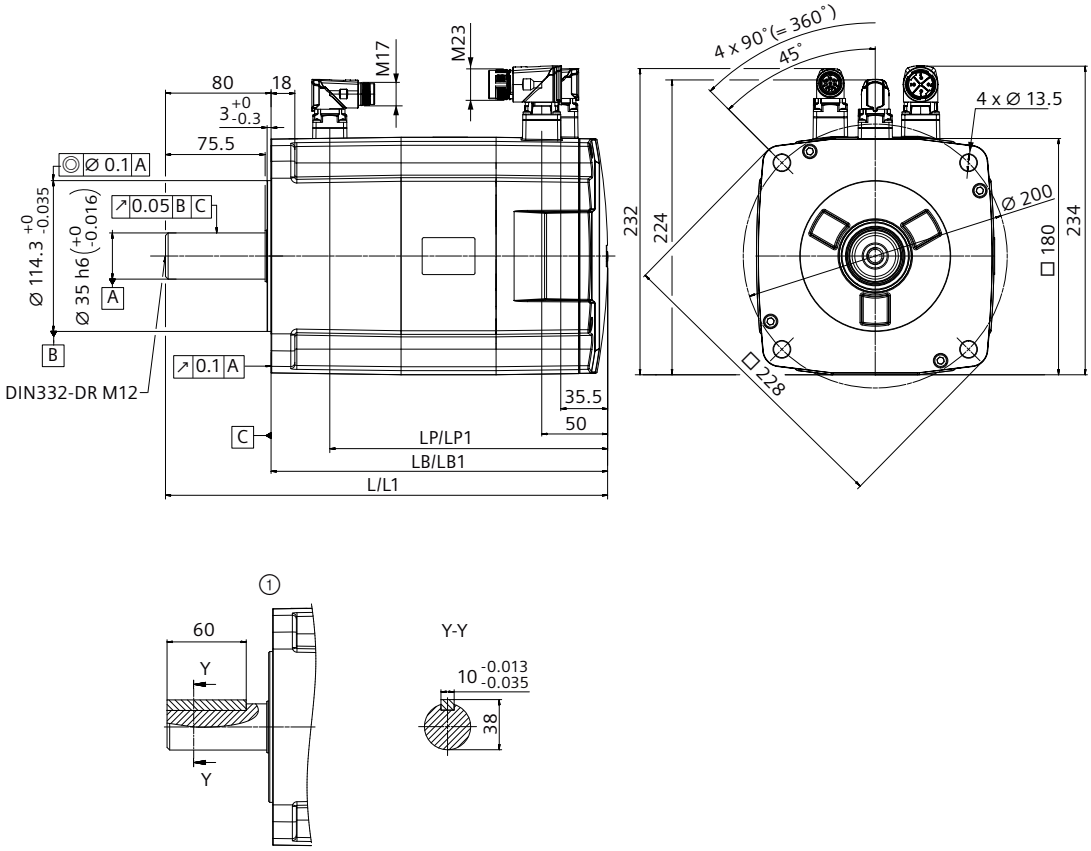

① With feather key

Table 5-14 Dimensions, 1FL2310

SIMOTICS S-1FL2 Shaft height 90	Motor length					
	Without brake			With brake		
	L	LB	LP	L1	LB1	LP1
1FL2310-0	269.5	189.5	/	335	255	210.5
1FL2310-2	295.5	215.5	/	361	281	236.5
1FL2310-4	321.5	241.5	/	387	307	262.5
1FL2310-6	373.5	293.5	/	439	359	314.5

5.2.7 Mounting the feather key

Requirement

⚠ WARNING

Injuries due to feather key flung out

When a motor using a key is running, the feather key on the shaft can be thrown out by centrifugal force. This can result in personal injury or material damage.

- Before operating the motor, the feather key on the shaft must be firmly secured to prevent from being thrown out by the centrifugal force.

NOTICE

Damage to motor bearing due to improper operation

Never mount the feather key by hammering into the key slot; otherwise, there is a risk of bearing damage.

- Pay attention to the installation direction of the feather key.
- Mount the key without striking the key slot or the shaft extension.

Procedure

Proceed as follows to mount the feather key into the key slot:

1. Install the feather key ("①") to the key slot ("②") and make sure that the feather key and the key slot are fitted closely. Siemens recommends that you place the V-type block ("③") under the shaft extension for supporting.
2. Knock the feather key into the key slot by using a copper bar.

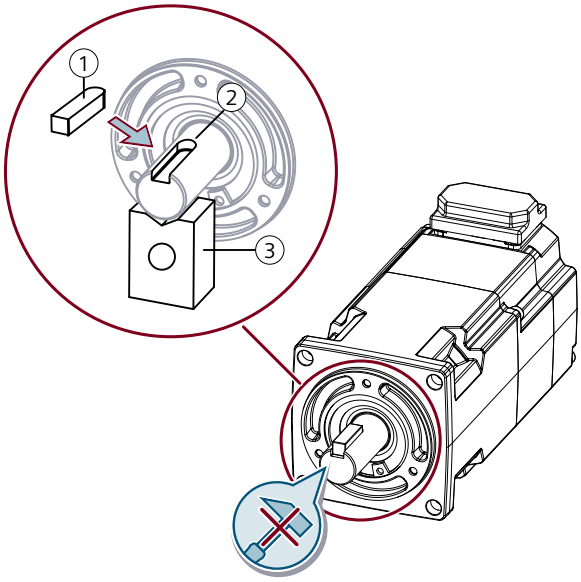

① Well-lubricated feather key
② Key slot
③ V-type block

Figure 5-4 Mounting the feather key

5.2.8 Attaching output elements

Overview

Appropriate arrangement of the output elements reduces the bending torque load applied to the shaft and the bearing.

Requirement

Mount the output elements as close as possible to the motor bearing.

Optimum	Unfavorable
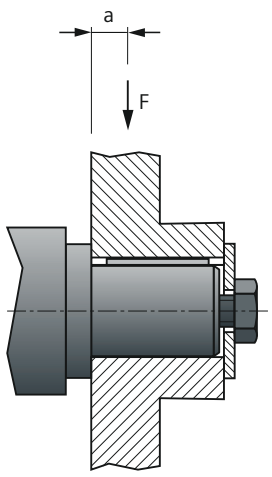	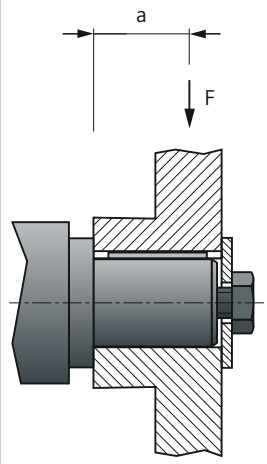
Low stress on shafts and bearings	High stress on shafts and bearings

Mount or remove the output elements (for example, couplings, gear wheels, and belt pulleys) by using suitable devices only.

- Use the threaded hole in the shaft extension.
- If required, heat up the output elements before mounting or removing.
- When removing the output elements, use an intermediate disk to protect the centering in the shaft extension.

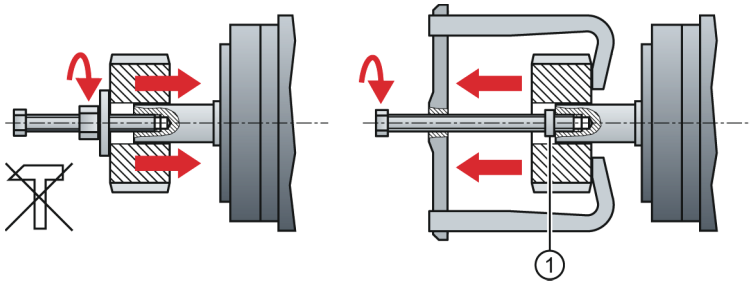

① Intermediate washer/disk

Figure 5-5 Mounting and removing output elements

- If necessary, completely balance the motor together with the output elements according to ISO 1940.

Note

Motors with feather key are half-key balanced. The motors have been balanced with half a feather key.

Procedure

Proceed as follows to attach an output element (for example, a coupling) to the motor:

1. Select a coupling.
   Use a flexible coupling with high torsional rigidity specifically designed for servo motors, which can transfer the motor torque to the mechanics and compensate radial, axial, and angular misalignments.
2. Install the coupling.
   Do not strike the shaft when installing a coupling. Ensure that the radial and axial forces are smaller than the allowable maximum values specified in Section "Axial and radial forces (Page 583)".
3. Align the coupling.
   When a motor is used with a flange coupling, the radial deviation must be smaller than 0.03 mm; otherwise, the bearing will be damaged. The required alignment accuracy varies with the motor speed and the coupling type. Determine the accuracy according to actual applications.

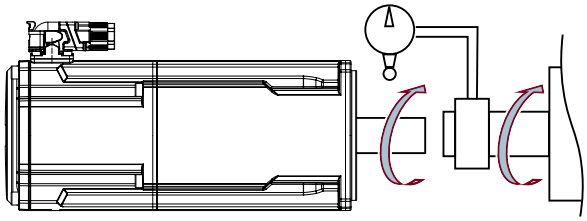

   – Rotate the motor shaft and the machine shaft to align the coupling.
   – An alignment accuracy test is preferred. If unachievable, judge the accuracy by observing whether the coupling can slide smoothly on both shafts.
4. Realign the coupling.
   If the coupling gives out abnormal sounds, refer to Step 3 "Align a coupling" to realign the coupling until the sounds disappear.
5. Measure tension.
   The belt tension must be smaller than the allowable radial forces of the motor.

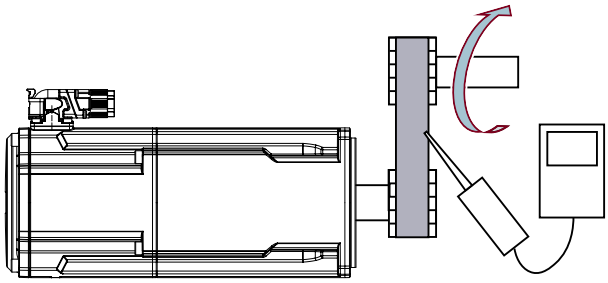

   – Measure the belt tension at multiple points using a tension meter while turning the motor shaft by 45°.
   – Reduce the axial misalignment of the belt-pulleys to keep the axial forces to the motor shaft to a minimum.

5.2.9 Laying cables in cable carriers (for MOTION-CONNECT 380 only)

Description

Laying cables

- Use spacers to separate cables with different outer diameters or cables made of different materials.
- Fill the spacers evenly to ensure that the position of cables does not change during operation.
- Distribute cables symmetrically according to their weights and dimensions.
- Keep cables untwisted in the cable carrier.
- When inserting prefabricated cables in the cable carrier, do not pull the connector, as this may damage the strain relief or cable clamping.

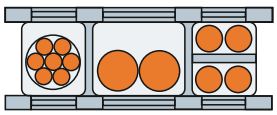

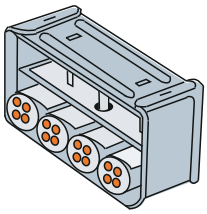

Moving cables

- Lay the cables loosely in the carrier, so that the cables are free to move in particular in the bending radii of the carrier.
- Observe the specified minimum bending radii.

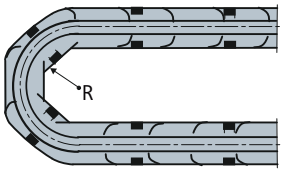

R Bending radius on the cable carrier

Fixing cables

- Make sure that cables in the carrier are unattached and movable.
- Place cable fixings in a "dead" zone at each end, suitably far away from each end point of the moving parts.

Note

Additional fixing of the cable

If between the cable strain relief on the cable carrier and the terminal at the motor, part of the cable is hanging loose or is not routed, Siemens recommends that the cable is additionally fixed for vibration load and with horizontal or vertical cable entries.

- Additionally fix the cable where the motor is fixed so that machine vibrations are not transferred to the connector.

Connecting

6

Note

Fix all the connecting cables to the converter shield plate by using shield clamps or suitable cable ties.

6.1 System connection

Overview diagram

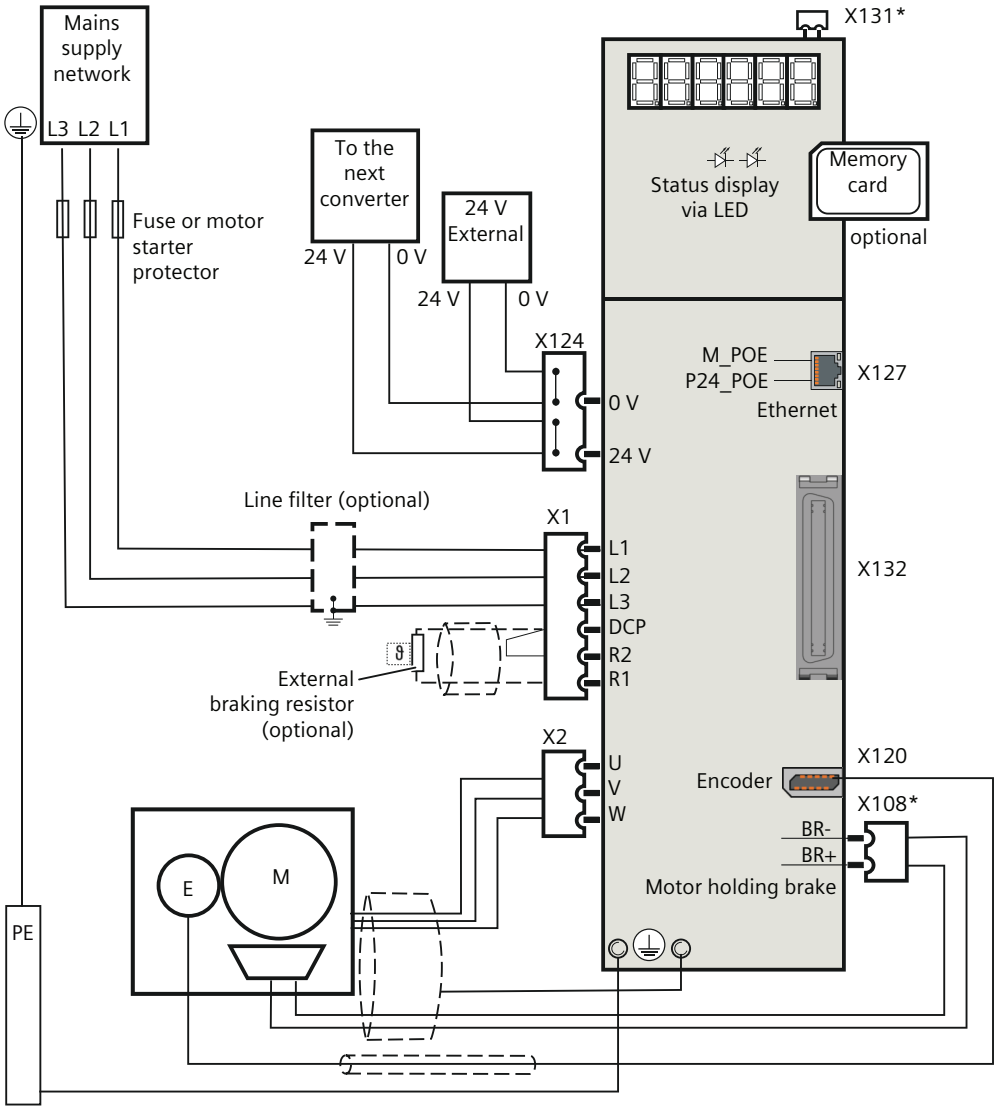

* The interfaces X131 and X108 are available on S200 PTI only.

Figure 6-1 Connection example for converters with 3 AC line connection

6.2 Overview of the converter interfaces

Overview diagram

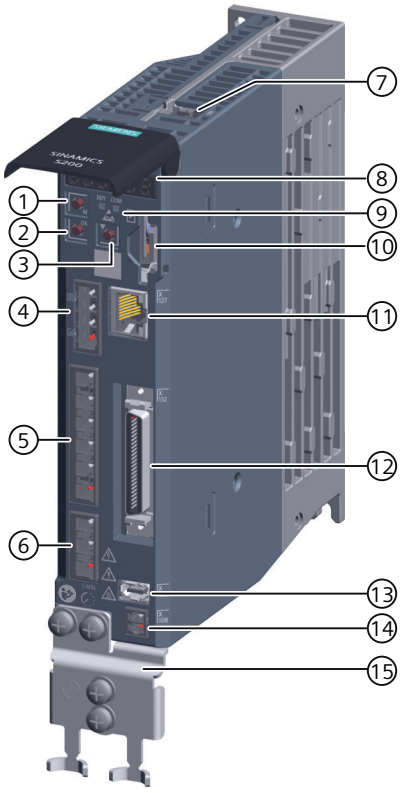

① M button
② OK button
③ DOWN button
④ 24 V DC power supply - X124
⑤ Mains and braking resistor interface - X1
⑥ Motor power interface - X2
⑦ STO interface - X131[1)]
⑧ 6-digit display
⑨ LED status indicators
⑩ Memory card slot
⑪ Service interface (Ethernet) - X127
⑫ Control/status inputs and outputs - X132
⑬ Encoder interface - X120
⑭ Motor holding brake interface - X108[1)]
⑮ Shield plate

[1)] The interfaces X131 and X108 are available on S200 PTI only.

Figure 6-2 Converter interfaces

6.3 Cables and connectors

6.3.1 Maximum permissible cable lengths

Technical data

Table 6-1 Maximum permissible cable length

Connection type	Interface on the converter	Maximum permissible cable length (m)
Mains supply	X1 (L1, L2, and L3)	No restriction
External braking resistor	X1 (DCP and R1)	3
24 V DC power supply	X124	30
Motor power connection	X2	30
Encoder connection	X120	30
Motor holding brake	X108	30
Control/status inputs and outputs	X132	3
Ethernet connection	X127	10
STO connection	X131	30

6.3.2 Conductor cross-sections and cable lugs

Description

Table 6-2 Conductor cross-sections and cable lugs

Connection type	Terminal type	Conductor cross-section	Stripping length	Cable lug
Mains supply (L1, L2, L3)	Spring-loaded	0.75 mm² ... 2.5 mm² (AWG: 14 ... 12)	9 mm ... 10 mm	Pin-type 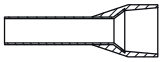
Mains supply (PE)	Screw-type	0.75 mm² ... 2.5 mm² (AWG: 14 ... 12)	10 mm	Ring type 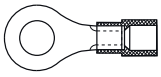
24 V DC power supply	Spring-loaded	0.5 mm² ... 2.5 mm² (AWG: 20 ... 12)	10 mm ... 11 mm[1)]	Pin-type 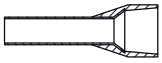
External braking resistor	Spring-loaded	0.75 mm² ... 2.5 mm² (AWG: 18 ... 12)	9 mm ... 10 mm	Pin-type 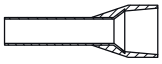

Connection type	Terminal type	Conductor cross-section	Stripping length	Cable lug
STO connection[2]	Spring-loaded	0.2 mm² ... 1.5 mm² (AWG: 24 ... 16)	10 mm	Pin-type 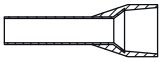
Motor power connection	Spring-loaded	0.75 mm² ... 2.5 mm² (AWG: 18 ... 12)	9 mm ... 10 mm	Pin-type 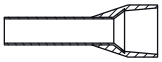
Motor holding brake[2]	Spring-loaded	0.38 mm² ... 0.75 mm² (AWG: 22 ... 18)	9 mm ... 10 mm	Pin-type 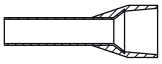

[1] If you use cable lugs with insulated end sleeves, make sure that the length of the cable lugs is 12 mm.

[2] For S200 PTI only

More information

For more information about assembling cable terminals, see Section "Assembling cables (Page 880)".

6.4 Connecting the mains supply

6.4.1 Interface description - X1

Overview

The converter connects to the mains supply via terminals L1, L2, and L3 on the interface X1.

Description

Table 6-3 Interface X1

X1	Terminal	Designation	Technical data
L1 L2 L3 DCP R2 R1	L1	Line phase L1	Maximum current limit: 20 A
	L2	Line phase L2	
	L3	Line phase L3	

Note

For applications on the single-phase mains supply network, you can connect the mains supply to any two terminals out of L1, L2, and L3.

6.4.2 Wiring

Requirement

You have assembled the converter line supply cable.

Procedure

1. Assemble the X1 plug to the converter.
2. Attach the cable terminals to the plug as shown below:

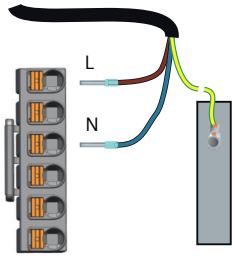

Figure 6-3 Connecting to the single-phase mains supply network

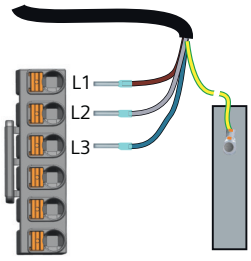

Figure 6-4 Connecting to the three-phase mains supply network

More information

For more information about cable requirements, see Section "Cables and connectors (Page 134)".

For more information about assembling cable terminals, see Section "Assembling cables (Page 880)".

6.4.3 Using several single-phase converters in machines and plants

Overview

Evaluate the input currents of single-phase converters in your machine or plant in terms of harmonics and unbalance.

Description

In unfavorable cases, the harmonic currents of several converters in the neutral conductor (N) add up to a value greater than the currents of the line conductors (L1, L2, L3). The current-carrying capacity of the neutral conductor must be sufficient for this.

IEC 60364-5-52:2019 Section 524 makes recommendations for sizing the neutral conductor. If no more precise information is available, the standard recommends dimensioning the neutral conductor for 1.45 times the current-carrying capacity of the line conductors.

WARNING

Fire caused by neutral conductor (N) overload

The neutral conductor can heat up due to the load from harmonic currents and cause a fire.

- Consider the harmonic currents when dimensioning the neutral conductor.

WARNING

Electric shock caused by PEN conductor overload

In TN-C supply networks, the protective function of the PEN conductor can be adversely affected by exposure to harmonic currents.

- Consider the harmonic currents when dimensioning the PEN conductor.

6.5 Connecting the motor

6.5.1 Routing cables in damp environments

Description

To operate the motor in a damp environment, follow the installation instructions below:

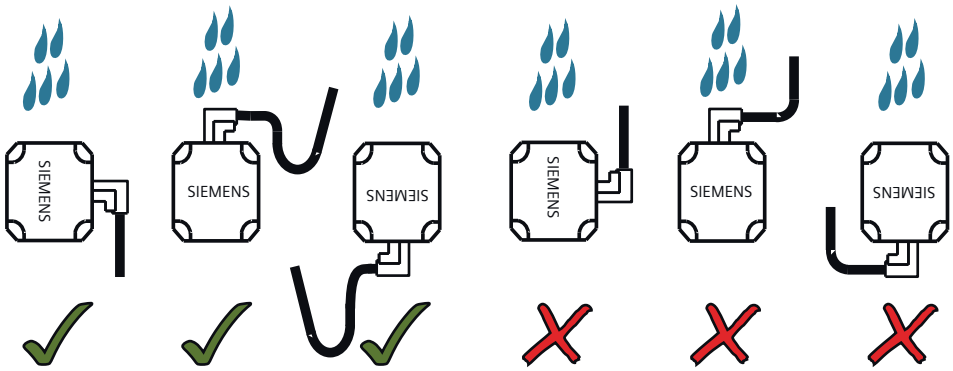

Figure 6-5 Routing cables in damp environments

6.5.2 Connecting the motor power interface

6.5.2.1 Interface description - X2 (converter side)

Overview

The converter connects to the motor on the interface X2.

Description

Table 6-4 Interface X2

X2	Terminal	Designation	Technical data
U V W	U	Motor phase U	Maximum current limit: 20 A
	V	Motor phase V	
	W	Motor phase W	

6.5.2.2 Interface description - power connector (motor side)

Overview

The 1FL2 motor power interface on the motor side has different variants:

- SH20, 30, and 40: hybrid connector that integrates power, encoder, and holding brake interfaces
- SH48 and 52: M17 angular connector that integrates power and holding brake interfaces
- SH45, 65, and 90: M23 angular connector

Description

- 1FL2 shaft heights 20, 30, and 40

Motor power interface	Pin	Designation	Technical specifications
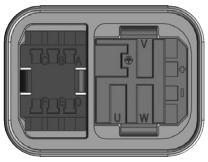 Hybrid connector	U	Phase U	-
	V	Phase V	-
	W	Phase W	-
	PE	Protective grounding	-
	+	Holding brake, positive	-
	-	Holding brake, negative	-
	A	P_Supply	Encoder power supply, 5 V
	B	M	Encoder power supply, reference ground
	C	Clock_P	Absolute encoder clock signal, positive
	D	Clock_N	Absolute encoder clock signal, negative
	E	Data_P	Absolute encoder data signal, positive
	F	Data_N	Absolute encoder data signal, negative

- 1FL2 shaft heights 48 and 52

Motor power interface	Pin	Designation
M17 angular connector	U	Phase U
	V	Phase V
	W	Phase W
	PE	Protective grounding
	A	Holding brake, positive
	B	Holding brake, negative
	Tightening torque: 1.0 Nm ... 1.5 Nm (8.9 lbf in ... 13.3 lbf in)	

- 1FL2 shaft heights 45, 65, and 90

Motor power interface	Pin	Designation
M23 angular connector	1	Phase U
	2	Phase V
	3	Phase W
	PE	Protective grounding
	Tightening torque: 1.5 Nm ... 2.0 Nm (13.3 lbf in ... 17.7 lbf in)	

6.5.2.3 Wiring

Connection example

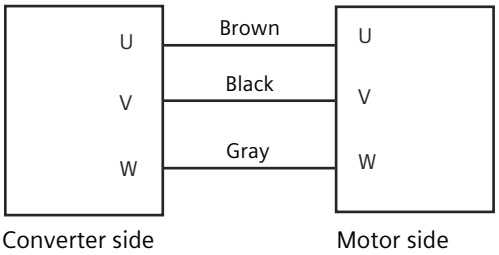

Figure 6-6 Motor power connection

Connection example of the hybrid connector

- Connecting the hybrid plug to the socket
  Insert the hybrid plug into the socket and push down the lever to secure the connection.

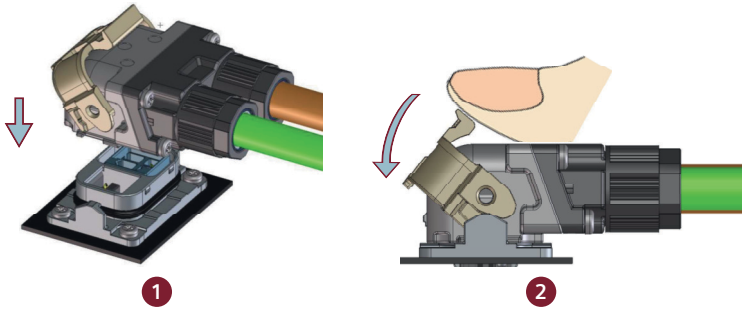

- Disconnecting the hybrid plug from the socket
  Insert a slotted screwdriver into the gap between the lever and the housing and slightly rotate the screwdriver to release the lever.

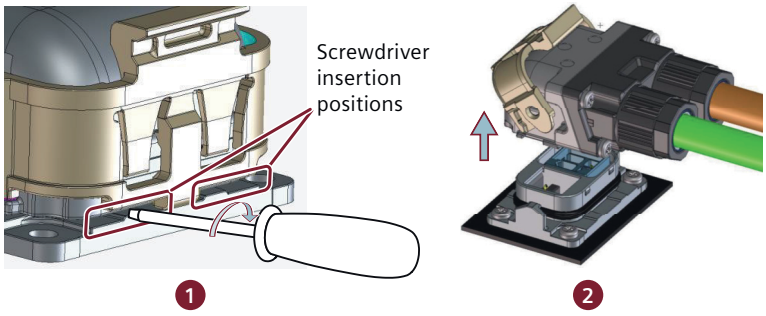

More information

For more information about cable requirements, see Section "Cables and connectors (Page 134)".

For more information about assembling cable terminals, see Section "Assembling cables (Page 880)".

6.5.3 Connecting the motor holding brake

6.5.3.1 Interface description (converter side)

Overview

The motor holding brake prevents the moving load from unexpected motions (for example, falling under the influence of gravity) when the servo drive system is deactivated.

The holding brake is activated once the motor power is cut off. Use the holding brake only when the motor is at a standstill. Do not use the holding brake to stop the load in motion.

Description

S200 PTI

S200 PTI connects to the motor holding brake via the interface X108.

Table 6-5 Interface X108

X108	Terminal	Designation	Technical specifications
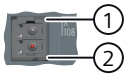	1	BRN	Motor holding brake, negative
	2	BRP	Motor holding brake, positive

S200 Basic PTI

S200 Basic PTI does not have a designated interface for connecting to the holding brake. To use the holding brake, connect a third-party device via a digital output at the interface X132 and configure the holding brake function as follows:

- Set p1215 to 3.
- Interconnect the digital output signal to r0899.12.

6.5.3.2 Interface description (motor side)

Overview

The motor holding brake interface on the motor is used to connect the built-in holding brake to the converter.

Description

- 1FL2 shaft heights 20, 30, and 40
  The holding brake interface is integrated into the hybrid connector. For more information, see Section "Interface description - power connector (motor side) (Page 140)".
- 1FL2 shaft heights 48 and 52
  The holding brake interface is integrated into the M17 power connector. For more information, see Section "Interface description - power connector (motor side) (Page 140)".
- 1FL2 shaft heights 45, 65, and 90

Holding brake interface	Pin	Designation
M17 angular connector	1	Holding brake, positive
	2	Holding brake, negative
	Tightening torque: 1.0 Nm ... 1.5 Nm (8.9 lbf in ... 13.3 lbf in)	

6.5.3.3 Wiring

Connection example

Connecting S200 PTI to the motor holding brake

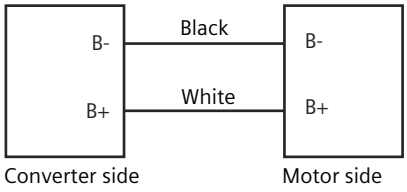

Figure 6-7 Motor holding brake connection via X108

Connecting S200 Basic PTI to the motor holding brake

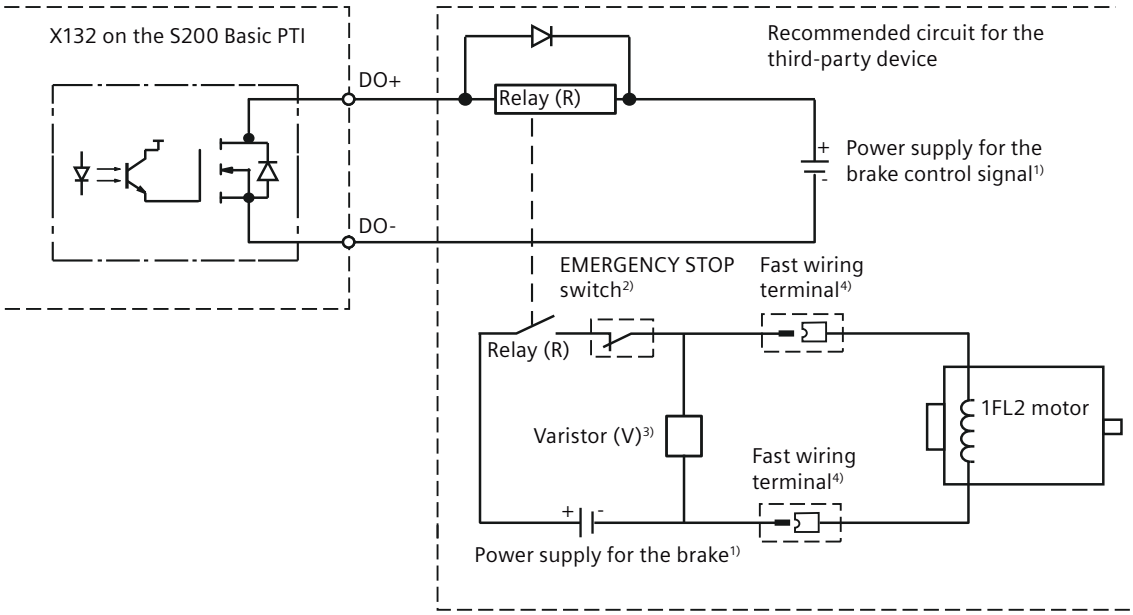

Figure 6-8 Motor holding brake connection via a digital output

Note

1) To avoid electro-magnetic interference to electronic components, make sure that you use different power supplies for the brake and the brake control signal.

2) The motor holding brake can be controlled by the brake control signal from the digital output and an external EMERGENCY STOP device.

3) Install a varistor to suppress the surge voltage or surge current generated by the relay (RY) during its ON/OFF operation.

4) To extend the connection of the holding brake to the relay, use appropriate fast wiring terminals.

Varistor (V) used for the power supply of the brake

Note

All the following data on a varistor is provided based on the low inertia motors with a rated power of 2 kW; however, the data is also applicable to the low inertia motors of other power ranges.

Consider the following current-time and voltage-time characteristics when using a varistor to suppress the surge voltage or surge current:

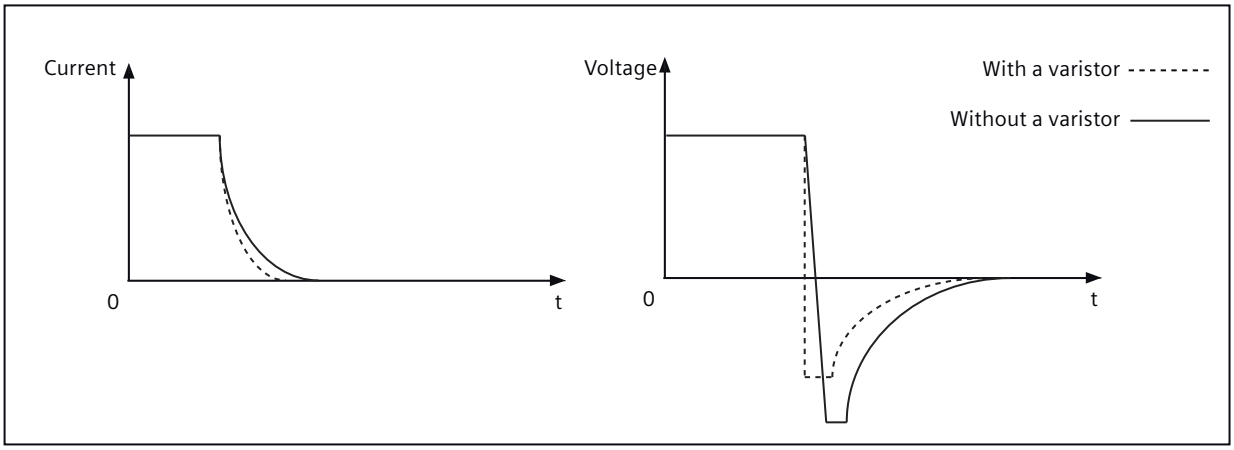

You may select an appropriate varistor with reference to the table below:

Power supply voltage of the brake		24 V DC
Order information	Manufacturer	EPCOS
	Model	S20K20
Specification requirements	Operating temperature	-20 °C to 60 °C
	Delay switching frequency	< 10 times/min
	Maximum operating DC voltage	26 V
	Average power dissipation	0.2 W
	Voltage at 1 mA	33 V ± 10%
	Clamping voltage at 20 A (8/20 µs)	65 V
	Energy absorption (2 ms) at a time	18 J

Relay (R) used for the power supply of the brake

Siemens recommends that you choose a Siemens relay (article number: 3RQ2000-1AW00 or 3RQ2000-2AW00).

You can also select other appropriate relays with reference to the table below:

Insulation voltage for overvoltage category III according to IEC 60664 for pollution degree 3	300 V
Max. permissible voltage for protective separation between control circuit and auxiliary circuit according to IEC 60947-1	300 V
Control supply voltage	24 ... 240 AC/DC; 50/60 Hz
Operating range factor of control supply voltage	0.7 ... 1.1
Current-carrying capacity of the output relay • At DC-13 at 24 V	2 A

Fast wiring terminals used for connecting the relay

You can extend the connection of the holding brake to the relay by using a two-pole fast wiring terminal or two one-pole fast wiring terminals.

You may select appropriate fast wiring terminals with reference to the table below:

Terminal type	Spring-loaded
Materials	Insulated, flame-retardant cover, with electrolytic copper contacts
Nominal voltage	450 V
Rated current	32 A
Rated power	7040 W
Supported conductor cross-sections	• Solid conductors: 0.2 mm^2 ... 4 mm^2 (AWG: 24 ... 12) • Stranded conductors: 0.2 mm^2 ... 2.5 mm^2 (AWG: 14 ... 12)
Stripping length	10 mm

More information

For more information about cable requirements, see Section "Cables and connectors (Page 134)".

For more information about assembling cable terminals, see Section "Assembling cables (Page 880)".

6.5.4 Connecting the encoder

6.5.4.1 Interface description - X120 (converter side)

Overview

The servo drive system supports three types of encoders:

- Absolute encoder, 17-bit single-turn
- Absolute encoder, 21-bit single-turn
- Absolute encoder, 21-bit single-turn +12-bit multiturn

The converter connects to the encoder of the motor on the interface X120.

Description

Table 6-6 Interface X120

X120	Pin	Designation	Technical specifications
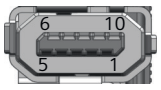 IX-C socket	1	DP1	Absolute encoder data signal, positive
	2	DN1	Absolute encoder data signal, negative
	3	Reserved	Reserved
	4	CLKP1	Absolute encoder clock signal, positive
	5	CLKN1	Absolute encoder clock signal, negative
	6	M	Reserved for reference ground
	7	Power_ENC1	Encoder power supply, 5 V DC
	8	M_ENC1	Encoder power supply, reference ground
	9	Reserved	Reserved
	10	Reserved	Reserved

6.5.4.2 Interface description (motor side)

Overview

The encoder interface on the motor is used to transfer position data to the converter for real time control.

Description

- 1FL2 shaft heights 20, 30, and 40
  The encoder interface is integrated into the hybrid connector. For more information, see Section "Interface description - power connector (motor side) (Page 140)".
- 1FL2 shaft heights 48 and 52

Encoder interface	Pin	Designation	Technical specifications
M17 angular connector	1	P_Supply	Encoder power supply, 5 V
	2	M	Encoder power supply, reference ground
	3	Clock_P	Absolute encoder clock signal, positive
	4	Clock_N	Absolute encoder clock signal, negative
	5	Data_P	Absolute encoder data signal, positive
	6	Data_N	Absolute encoder data signal, negative
	Tightening torque: 1.0 Nm ... 1.5 Nm (8.9 lbf in ... 13.3 lbf in)		

- 1FL2 shaft heights 45, 65, and 90

Encoder interface	Pin	Designation	Technical specifications
M17 angular connector	1	P_Supply	Encoder power supply, 5 V
	2	M	Encoder power supply, reference ground
	3	-	Reserved
	4	Clock_N	Absolute encoder clock signal, negative
	5	Data_P	Absolute encoder data signal, positive
	6	Clock_P	Absolute encoder clock signal, positive
	7	-	Reserved
	8	Data_N	Absolute encoder data signal, negative
	Tightening torque: 1.0 Nm ... 1.5 Nm (8.9 lbf in ... 13.3 lbf in)		

6.5.4.3 Wiring

Connection example

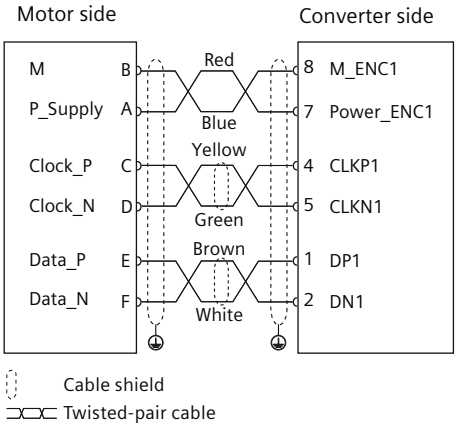

Figure 6-9 Encoder connection for 1FL2 shaft heights 20, 30, and 40

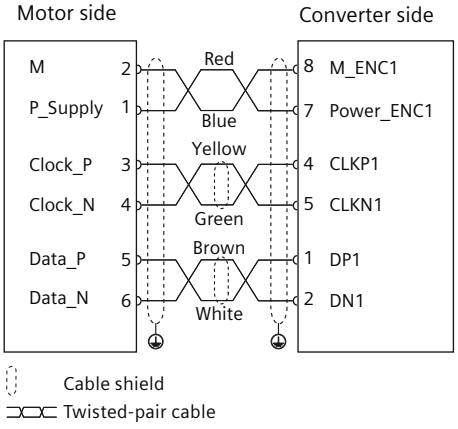

Figure 6-10 Wiring of encoder for 1FL2 shaft heights 48 and 52

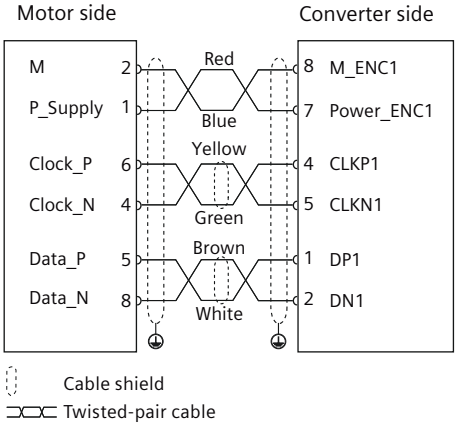

Figure 6-11 Wiring of encoder for 1FL2 shaft heights 45, 65, and 90

More information

For more information about cable requirements, see Section "Cables and connectors (Page 134)".

For more information about assembling cable terminals, see Section "Assembling cables (Page 880)".

6.5.5 Rotating the connectors at the motor

Overview

The connectors at the 1FL2 motor with shaft heights 45, 48, 52, 65, and 90 can be rotated to a different angle to a limited extent.

Use a suitable socket connector as a lever to rotate the connector.

Note

Rotating the connectors

- Do not exceed the permissible range of rotation.
- To ensure the degree of protection, do not rotate more than 10 times.

WARNING

Adjusting cable directions

Before adjusting the cables, switch off the power supply. Otherwise, the motor contains a hazardous voltage and a risk of electric shock.

Description

Table 6-7 Rotation range of the power connector ① and encoder connector ②

Motor	Power connector ①, size M17 and M23			Encoder connector ②, size M17		Drawing
	Size	Angle α	Angle α'	Angle β	Angle β'	
SH45	M23	280°	-	270°	-	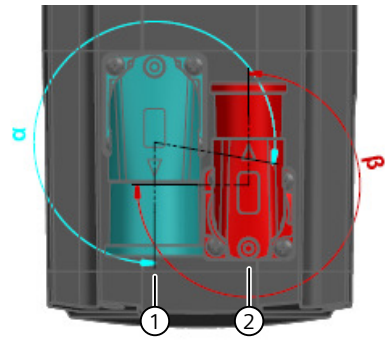
SH48 SH52	M17	225°	45°	225°	35°	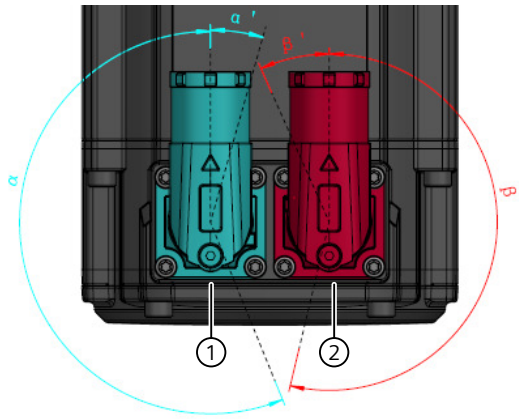

Motor	Power connector ①, size M17 and M23			Encoder connector ②, size M17		Drawing
	Size	Angle α	Angle α'	Angle β	Angle β'	
SH65	M23	280°	30°	270°	40°	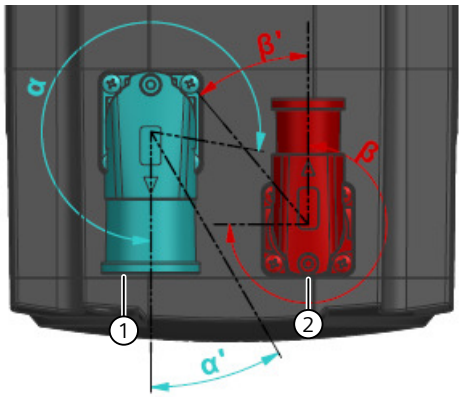
SH90	M23	210°	100°	270°	40°	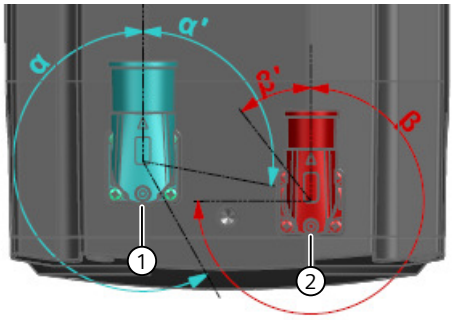

Table 6-8 Rotation range of the holding brake connector ③

Motor	Holding brake connector ③, size M17		Drawing
	Angle θ	Angle θ'	
SH45 SH65 SH90	220°	90°	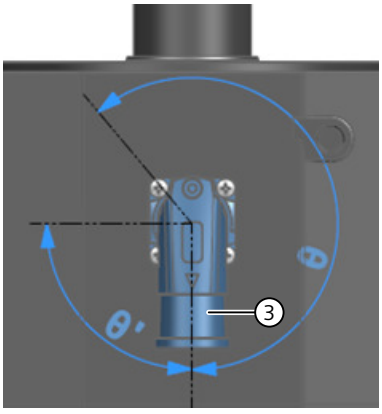

6.6 Connecting the braking resistor

6.6.1 Interface description - X1

Overview

The converter connects to the braking resistor via terminals DCP, R1, and R2 on the interface X1.

Description

Table 6-9 Interface X1

X1	Terminal	Designation
L1 L2 L3 DCP R2 R1	DCP	DC link positive (for connection to the braking resistor)
	R2	Connection to the internal braking resistor[1)]
	R1	Connection to the external braking resistor

[1)] S200 Basic PTI (FSA and FSB) and S200 PTI FSA (0.1 kW) do not have an internal braking resistor.

6.6.2 Wiring

Overview

S200 Basic PTI FSC and S200 PTI (excluding FSA 0.1 kW) converters have an integrated braking resistor for absorbing regenerative energy from the motor. To use the internal braking resistor, connect DCP and R2 with the jumper included in the scope of delivery.

To use an external braking resistor, connect the converter to an external braking resistor via terminals DCP and R1.

When the terminal R1 or R2 is not in use, cover it with the blanking plug provided in the connector kit (installed on R1 upon delivery).

Requirement

⚠ WARNING

Electric shock as a result of a residual charge in power components

After the power supply has been switched off, it takes up to five minutes until the capacitors in the converter have discharged so that the residual charge is at a non-hazardous level. Touching the converter immediately after powering off can result in electric shock due to residual charge in the power components.

- Check the voltage at the converter connections before you connect the external braking resistor.

⚠ WARNING

Fire caused by an unsuitable or improperly installed braking resistor

Using an unsuitable or improperly installed braking resistor can result in fire and formation of smoke. Fire and smoke can cause severe personal injury or property damage.

- Only use braking resistors that are approved for the converter.
- Install the braking resistor in accordance with regulations.

Procedure

Connecting the internal braking resistor

1. Switch off all power supplies to the converter, including the mains supply and the 24 V DC power supply.
2. Ensure that the terminal R1 is covered with the blanking plug.
3. Connect DCP and R2 with the jumper included in the scope of delivery as shown below:

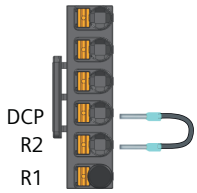

Connecting an external braking resistor

1. Switch off all power supplies to the converter, including the mains supply and the 24 V DC power supply.
2. Wait for five minutes to allow the converter to discharge and check that no voltage is present at the converter connections.
3. Remove the jumper between DCP and R2, if present.

4. Remove the blanking plug from R1 and insert it into R2.
5. Connect the external braking resistor cable to terminals DCP and R1 as shown below:

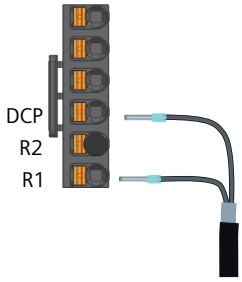

More information

For more information about cable requirements, see Section "Cables and connectors (Page 134)".

For more information about assembling cable terminals, see Section "Assembling cables (Page 880)".

6.7 Connecting the 24 V DC power supply

6.7.1 Interface description - X124

Overview

The converter connects to an external 24 V power supply via interface X124. The interface supports daisy-chain connection of multiple converters. The maximum permissible number of daisy-chained converters depends on the maximum current limit of the X124 plug.

Description

Table 6-10 Interface X124

X124	Terminal	Designation	Technical data
0 V 0 V 24 V 24 V	0 V	Power supply, 0 V	Maximum current limit: 10 A
	0 V	Power supply, 0 V	
	24 V	Power supply, 24 V DC	
	24 V	Power supply, 24 V DC	

6.7.2 Wiring

Requirement

WARNING

Electric shock due to unsuitable power supply

When the converter is connected to an unsuitable power supply, exposed components may carry a hazardous voltage that might result in serious injury or death.

- Only use 24 V power supplies that provide SELV (Safety Extra Low Voltage) or PELV (Protective Extra Low Voltage) output voltages (maximum 60 V DC briefly).

Procedure

1. Assemble the X124 plug to the converter.
2. Attach the cable to the plug as shown below:

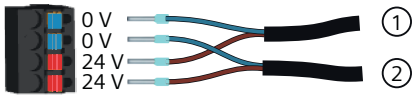

① Connecting to the 24 V DC power supply
② Connecting to the daisy-chained converter

More information

For more information about cable requirements, see Section "Cables and connectors (Page 134)".

For more information about assembling cable terminals, see Section "Assembling cables (Page 880)".

6.8 Connecting the inputs and outputs

6.8.1 Interface description - X132

Overview

The converter connects to the controller for signal transmission on the interface X132.

Description

Table 6-11 Interface X132

X132	Pin	Designation		Technical specifications	Conductor color
		S200 PTI	S200 Basic PTI		
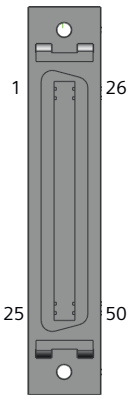	1	PTIA_D+	PTIA_D+	High-speed 5 V differential pulse train input A (+)	Gray-Pink
	2	PTIA_D-	PTIA_D-	High-speed 5 V differential pulse train input A (-)	Red-Blue
	3	DI_COM	DI_COM	Common terminal for digital inputs	Green
	4	DI_COM	DI_COM	Common terminal for digital inputs	Yellow
	5	DI0	-	Digital input 0 (high-speed digital input)	Gray
	6	DI1	-	Digital input 1 (high-speed digital input)	Pink
	7	DI2	DI2	Digital input 2	Blue
	8	DI3	DI3	Digital input 3	Red
	9	DI4	DI4	Digital input 4	Black
	10	DI5	DI5	Digital input 5	Violet
	11	DI6	DI6	Digital input 6	White
50-pin MDR socket Tightening torque: 0.2 Nm	12	DI7	DI7	Digital input 7	Brown
	13	DI8	-	Digital input 8	White-Green
	14	DI9	-	Digital input 9	Brown-Green
	15	PTOA+	PTOA+	High-speed 5 V differential pulse train encoder output A (+)	White-Yellow
	16	PTOA-	PTOA-	High-speed 5 V differential pulse train encoder output A (-)	Yellow-Brown
	17	PTOZ(OC)	PTOZ(OC)	Pulse train encoder zero mark signal (open collector output)	White-Gray
	18	P12OPVADC	P12OPVADC	12 V power output	Gray-Brown
	19	AI0+	-	Analog input channel 0, positive	White-Pink
	20	AI0-	-	Analog input channel 0, negative	Pink-Brown
	21	AI1+	-	Analog input channel 1, positive	White-Blue
	22	AI1-	-	Analog input channel 1, negative	Brown-Blue
	23	RS485+	-	RS485 differential signal, positive	White-Red
	24	M	M	Reference ground	Brown-Red
	25	RS485-	-	RS485 differential signal, negative	Gray-Green
	26	PTIB_D+	PTIB_D+	High-speed 5 V differential pulse train input B (+)	White-Black
	27	PTIB_D-	PTIB_D-	High-speed 5 V differential pulse train input B (-)	Brown-Black
	28	P24_DO	P24_DO	External 24 V supply for digital outputs	Yellow-Gray
	29	DO3+	DO3+	Digital output 3, positive	Green
	30	DO0	-	Digital output 0	Yellow
	31	DO1	-	Digital output 1	Gray
	32	DO2	DO2	Digital output 2	Pink
	33	DO3-	DO3-	Digital output 3, negative	Pink-Green
	34	DO4+	DO4+	Digital output 4, positive	Yellow-Pink
	35	DO5+	DO5+	Digital output 5, positive	Green-Red

X132	Pin	Designation		Technical specifications	Conductor color
		S200 PTI	S200 Basic PTI		
	36	PTIA_P	PTIA_P	24 V pulse train input A, positive	Green-Blue
	37	PTIA_M	PTIA_M	24 V pulse train input A, ground	Yellow-Blue
	38	PTIB_P	PTIB_P	24 V pulse train input B, positive	Green-Black
	39	PTIB_M	PTIB_M	24 V pulse train input B, ground	Yellow-Black
	40	PTOB+	PTOB+	High-speed 5 V differential pulse train encoder output B (+)	Gray-Blue
	41	PTOB-	PTOB-	High-speed 5 V differential pulse train encoder output B (-)	Pink-Blue
	42	PTOZ+	PTOZ+	High-speed 5 V differential pulse train encoder output Z (+)	Gray-Red
	43	PTOZ-	PTOZ-	High-speed 5 V differential pulse train encoder output Z (-)	Pink-Red
	44	DO4-	DO4-	Digital output 4, negative	Yellow-Red
	45	AO_M	-	Analog output ground	Gray-Black
	46	AO0	-	Analog output channel 0	Pink-Black
	47	AO_M	-	Analog output ground	Blue-Black
	48	AO1	-	Analog output channel 1	Red-Black
	49	DO5-	DO5-	Digital output 5, negative	White
	50	MEXT_DO	MEXT_DO	External 24 V ground for digital outputs	Brown

More information

For more information about cable requirements, see Section "Cables and connectors (Page 134)".

For more information about assembling cable terminals, see Section "Assembling cables (Page 880)".

6.8.2 Wiring

6.8.2.1 Wiring of digital inputs

Overview

S200 PTI offers ten digital inputs (from DI0 to DI9), and S200 Basic PTI offers six digital inputs (from DI2 to DI7). DI0 and DI1 only support PNP wiring, and other digital inputs support both NPN and PNP types of wiring.

Connection example

Connecting DI0 and DI1

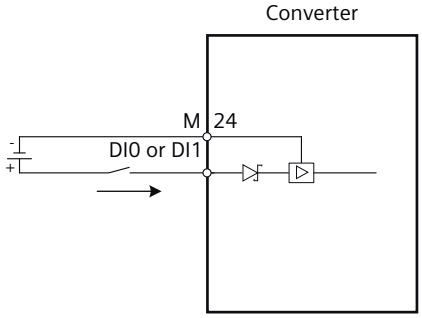

Figure 6-12 PNP wiring

Connecting DI2 to DI9

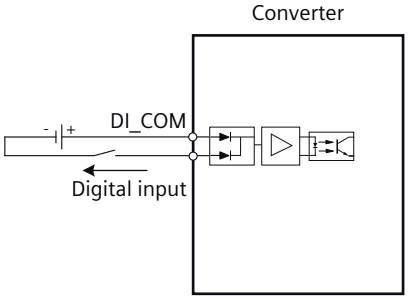

NPN wiring

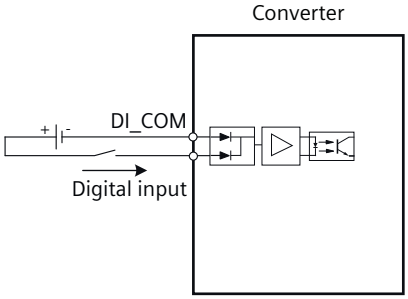

PNP wiring

More information

For more information about the technical data of digital inputs, see Section "General technical data (Page 560)".

6.8.2.2 Wiring of digital outputs

Overview

S200 PTI offers six digital outputs (from DO0 to DO5), and S200 Basic PTI offers four digital outputs (from DO2 to DO5). DO0, DO1, and DO2 only support NPN wiring, and DO3, DO4, and DO5 support both NPN and PNP types of wiring.

Condition

⚠ CAUTION

Damage to property due to overload of digital outputs

If digital outputs are overloaded, this can result in damage due to fire, device defects, or malfunctions.

- Ensure that the digital outputs are not loaded in excess of 100 mA.
- Install a 100 mA fuse for connection to the digital output.

Connection example

You can connect DO0, DO1, and DO2 as shown below:

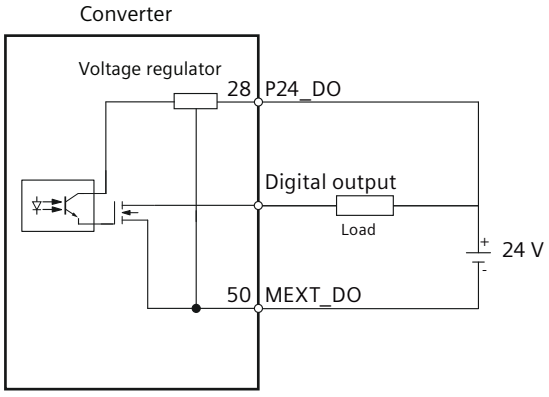

Figure 6-13 NPN wiring

You can connect DO3, DO4, and DO5 as shown below:

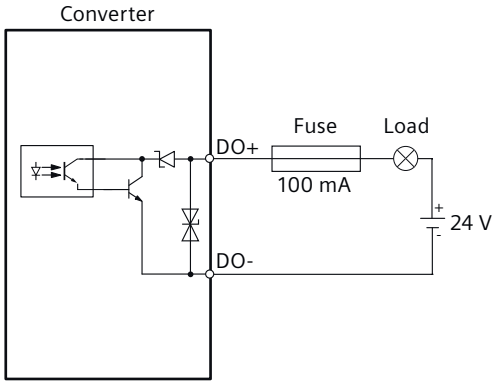

NPN wiring

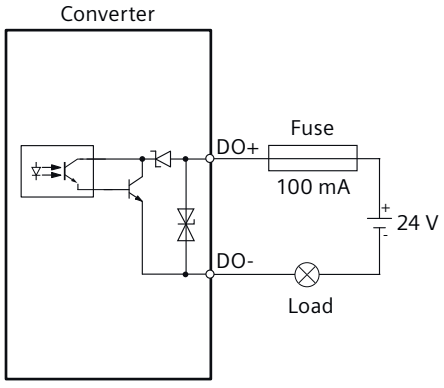

PNP wiring

More information

For more information about the technical data of digital outputs, see Section "General technical data (Page 560)".

6.8.2.3 Wiring of analog inputs

Overview

S200 PTI offers two analog inputs for torque and speed control. The wiring of the terminals varies depending on the selected control mode.

Connection example

- To use AI0 for the speed limit signal and AI1 for the torque limit signal, connect the terminals as shown below:

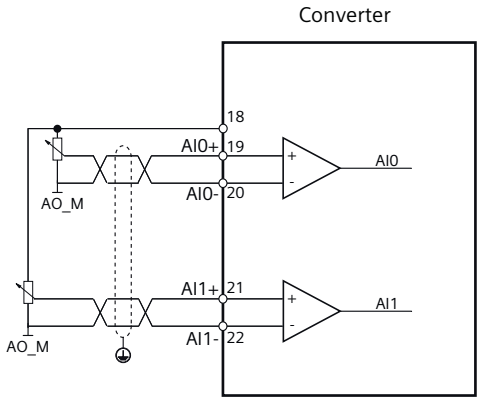

- To use AI0 for the speed setpoint signal and AI1 for the torque limit signal, connect the terminals as shown below:

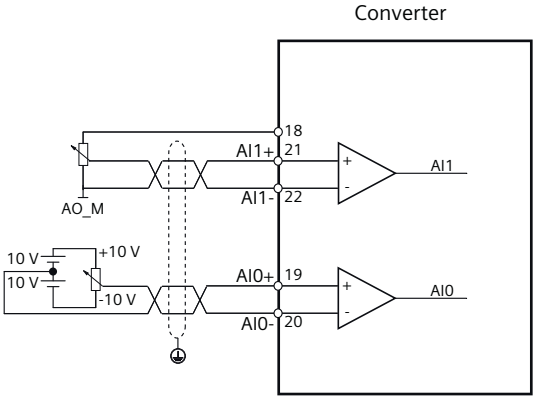

- To use AI0 for the speed limit signal and AI1 for the torque setpoint signal, connect the terminals as shown below:

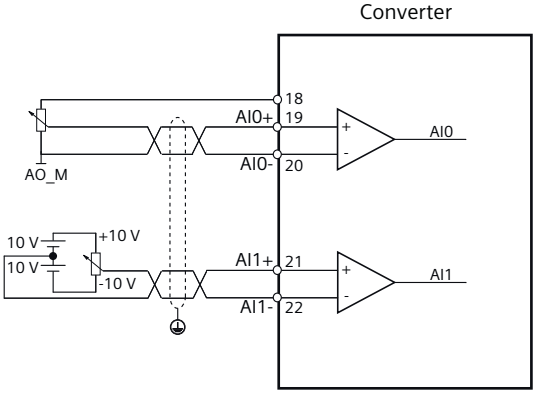

More information

For more information about the technical data of analog inputs, see Section "General technical data (Page 560)".

6.8.2.4 Wiring of analog outputs

Overview

S200 PTI offers two analog outputs for transmitting torque and speed signals to the controller.

Connection example

You can connect the analog outputs as shown below:

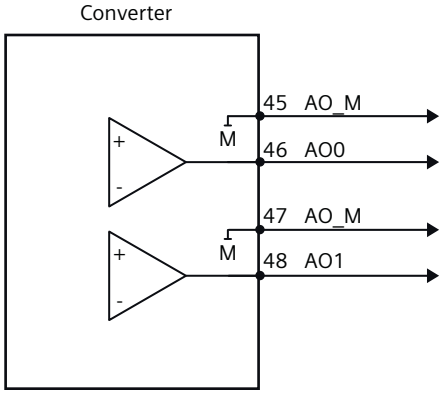

More information

For more information about the technical data of analog outputs, see Section "General technical data (Page 560)".

6.8.2.5 Wiring of pulse train inputs

Overview

The converter offers two channels of pulse train inputs:

- 24 V single-end pulse train inputs
  The maximum input pulse frequency for the channel is 200 kHz.
- High-speed 5 V differential pulse train inputs
  The maximum input pulse frequency for the channel is 4 MHz.
  The channel supports wire-break detection for input pulse frequency up to 1 MHz. When the converter detects a disconnection in the wire, it outputs fault F07217.

Description

You can connect the pulse train inputs as shown below.

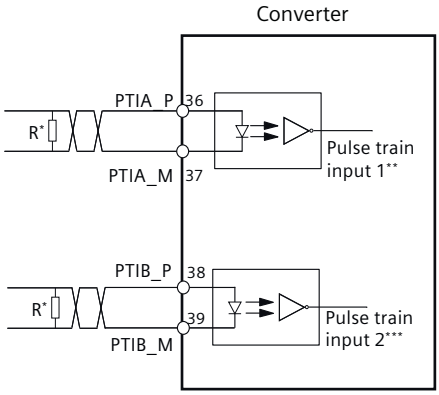

* When the input pulse frequency for the channel exceeds 100 kHz, install the resistor R (200 Ohm to 500 Ohm, recommended power ≥ 5 W).

** Depending on the selected setpoint pulse train input form, the pulse train input 1 can be A phase, CW, or pulse signals.

*** Depending on the selected setpoint pulse train input form, the pulse train input 2 can be B phase, CCW, or direction signals.

Figure 6-14 Wiring of 24 V single-end pulse train inputs

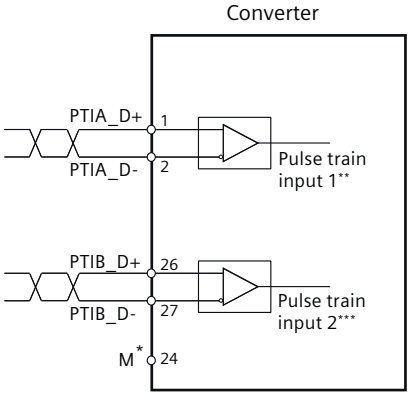

* Connected to the reference ground of the PLC

** Depending on the selected setpoint pulse train input form, the pulse train input 1 can be A phase, CW, or pulse signals.

*** Depending on the selected setpoint pulse train input form, the pulse train input 2 can be B phase, CCW, or direction signals.

Figure 6-15 Wiring of high-speed 5 V differential pulse train inputs

More information

For more information about the technical data of pulse train inputs, see Section "General technical data (Page 560)".

6.8.2.6 Wiring of pulse train outputs

Overview

The converter supports high-speed 5 V differential signals (A+/A-, B+/B-, Z+/Z-) and the open collector (zero pulse).

Description

You can connect the pulse train outputs as shown below:

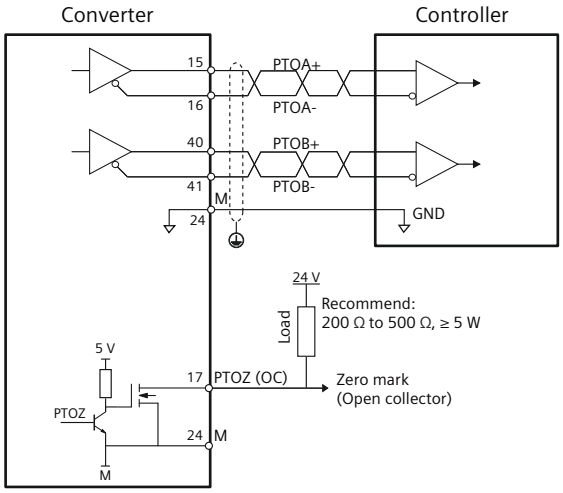

Figure 6-16 Wiring with the open collector

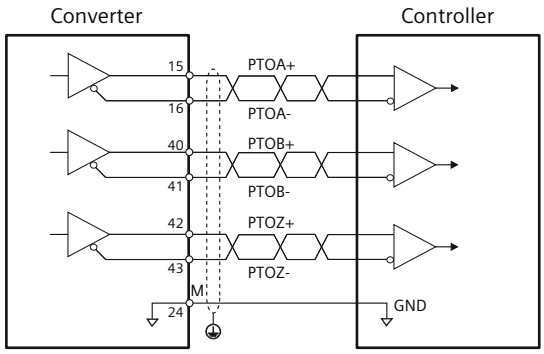

Figure 6-17 Wiring without the open collector

Note

Use shielded twisted-pair cables for signal transmission. Make sure that Pin M is securely connected to the reference ground of the controller.

More information

For more information about the technical data of pulse train outputs, see Section "General technical data (Page 560)".

6.8.2.7 Connection examples with SIMATIC S7-1200

Overview

This section shows the examples of connection between S200 PTI and SIMATIC S7-1200. The signal assignment shown in the examples is based on default settings. You can assign different signals to inputs and outputs based on your needs.

Connection example

Fast pulse train input position control mode (Fast PTI)

The following illustration uses high-speed 5 V differential pulse train inputs and outputs as an example.

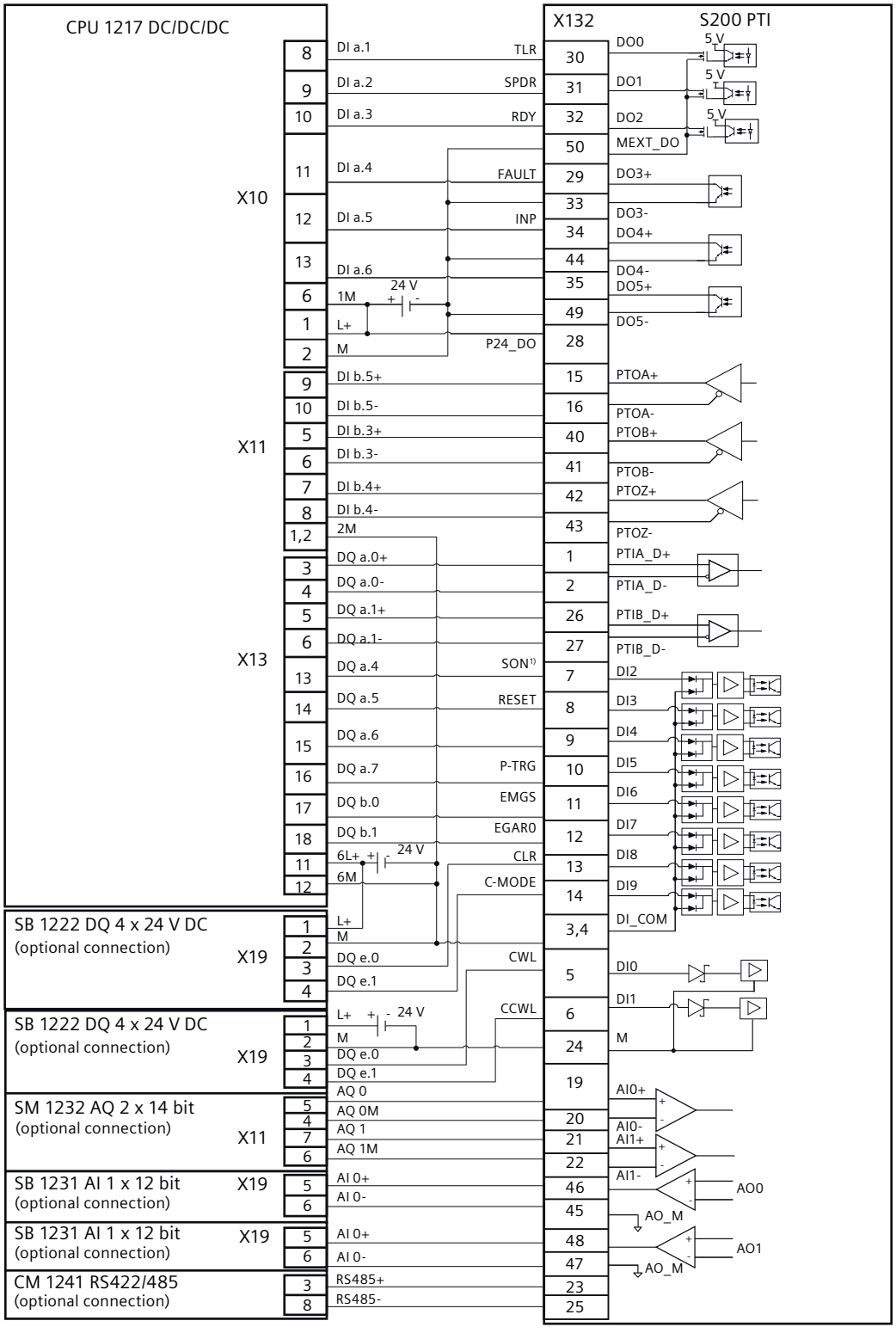

1) The DI signal is invalid when the Modbus communication is enabled for the transmission of control word and setpoint signals (p29008 = 1).

Figure 6-18 Connecting to S7-1200 for fast PTI mode

Speed control mode (S)

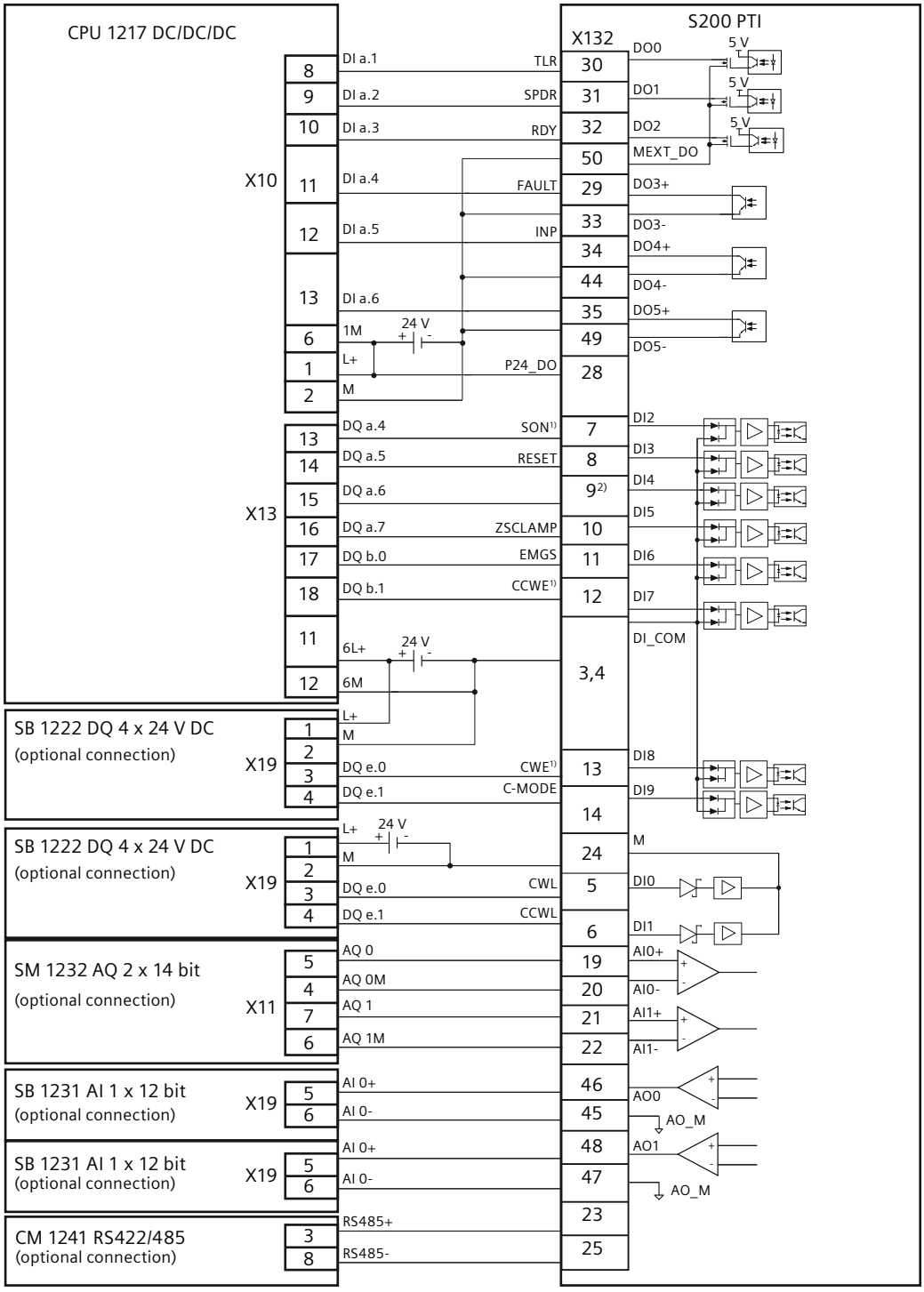

1) The DI signals are invalid when the Modbus communication is enabled for the transmission of control word and setpoint signals (p29008 = 1).

2) The default signal for DI4 is fixed speed setpoint selection bit 0. This signal is invalid when the Modbus communication is enabled for the transmission of control word and setpoint signals (p29008 = 1).

Figure 6-19 Connecting to S7-1200 for speed control mode

Torque control mode (T)

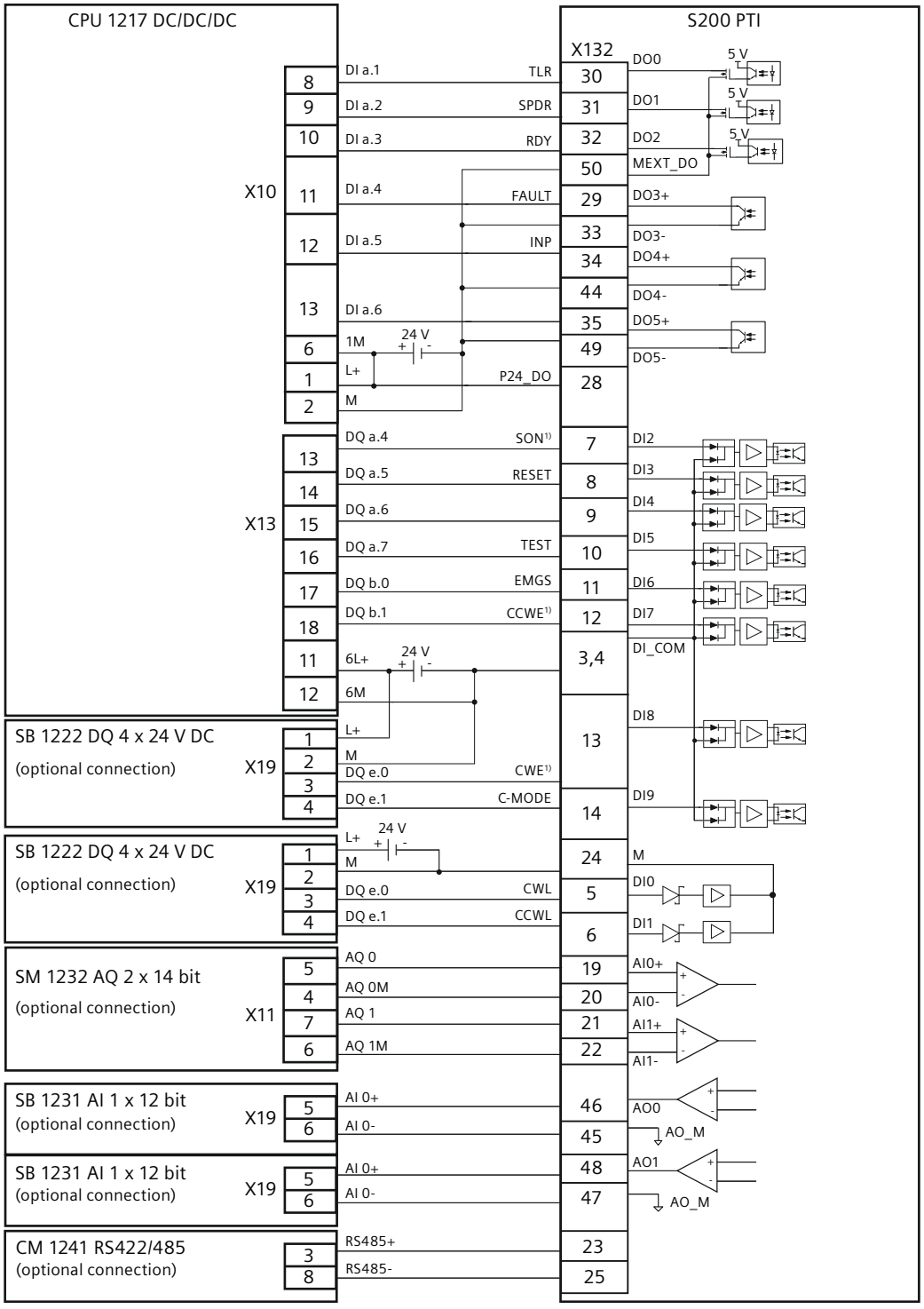

1) The DI signals are invalid when the Modbus communication is enabled for the transmission of control word and setpoint signals (p29008 = 1).

Figure 6-20 Connecting to S7-1200 for torque control mode

6.9 Connecting STO (for S200 PTI only)

6.9.1 Interface description - X131

Overview

The S200 PTI provides a fail-safe digital input (F-DI 0) to support Safety Integrated Functions. The F-DI includes two STO channels and enables connection to the following devices via interface X131:

- Safety sensors, such as EMERGENCY STOP control devices and light curtains.
- Pre-processing devices, including fail-safe control systems and safety relays.

Description

Table 6-12 Interface X131

X131	Terminal	Designation	Technical specifications
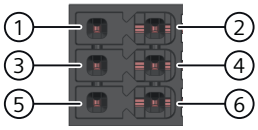	1	STO1+	STO channel 1, positive
	2	STO1-	STO channel 1, negative
	3	STO-VS	STO power supply
	4	STO-M	STO power supply, reference ground
	5	STO2+	STO channel 2, positive
	6	STO2-	STO channel 2, negative

6.9.2 Wiring

Overview

To connect to external safety devices, first assemble the X131 plug to the converter. You can use the internal or an external 24 V power supply for the connection.

To ensure EMC performance, Siemens recommends that you use twisted pair cables for STO connection.

Description

The F-DI 0 supports both NC/NC (Normally Closed/Normally Closed) and NC/NO (Normally Closed/Normally Open) contact configurations. The state of the safety function is determined by the contact configuration and the signals from the channels.

Table 6-13 NC/NC contact configuration

Signal		Status of safety function
Channel 1 (STO1)	**Channel 2 (STO2)**	
1	1	Deselected
0	0	Selected

Table 6-14 NC/NO contact configuration

Signal		Status of safety function
Channel 1 (STO1)	**Channel 2 (STO2)**	
1	0	Deselected
0	1	Selected

The contact configuration also affects the category that the drive system can achieve according to ISO 13849.

For the NC/NC configuration, the F-DI self-test mode determines the functional safety category.

Table 6-15 Category that can be achieved according to ISO 13849-1 when setting an F-DI as NC/NC contact

Cate-gory	Supply voltage	Application	Result
Cat 3	With or without using the internal supply voltage; however, without enabled self-test using specified dark pulses (p10018 = 0, p10041 = 0)	Local use, e.g. EMERGENCY STOP	The converter self-test detects errors in the circuits of the failsafe digital input.
Cat 4	Exclusive use of the internal supply voltage for PP circuit with enabled self-test using specified dark pulses at the internal supply voltage (p10041 = 1, p10018 > 0)	Protected cable routing, e.g. within a control cabinet	The converter self-test detects errors in the circuits of the failsafe digital input. The self-test of the connected cables with internally specified dark pulses detects the following errors: • Short-circuit to ground • Short-circuit to 24 V supply voltage
	Without using the internal supply voltage, but with test pulses of the connected external device (p10041 = 3)	Depending on the connected external device	

When setting the F-DI as an NC/NO contact (p10040 = 1), the application on the machine or system must switch the F-DI into a safe state (safety function is selected) at least once within a maximum time interval so that it can be fully tested by the converter and the desired PL

and category according to ISO 13849-1 can be achieved. The following PL /categories can be achieved depending on the time interval:

- at least once per year: PL d / Category 3
- at least every three months: PL e / Category 3
- at least daily: PL e / Category 4

Note

In the NO contact path, in addition to switch failure, power supply failures and interrupted cabling with reference to functional safety must be taken into consideration.

Siemens recommends that you configure the F-DI as NC/NC contact (p10040 = 0).

Connection example

Interconnection for an EMERGENCY STOP button with 24 V DC internal

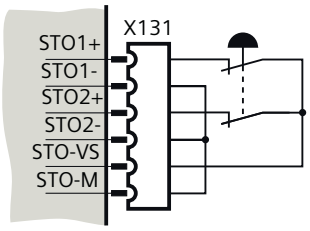

Figure 6-21 F-DI connection example with 24 V internal

Interconnection for an EMERGENCY STOP button with 24 V DC external

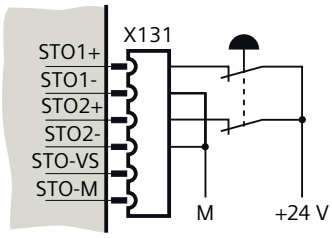

Figure 6-22 F-DI connection example with 24 V external

Interconnection of the fail-safe digital inputs with a fail-safe digital output

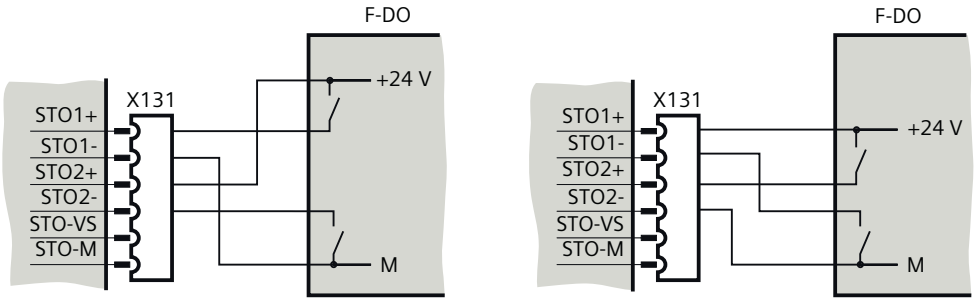

Figure 6-23 F-DI connection examples with a fail-safe digital output

More information

For more information about cable requirements, see Section "Cables and connectors (Page 134)".

For more information about assembling cable terminals, see Section "Assembling cables (Page 880)".

For more information about the STO function, see Section "Safety Integrated (for S200 PTI only) (Page 328)".

6.10 Connecting the service interface (Ethernet)

Overview

The converter connects to a commissioning device via the Ethernet interface X127. The interface offers 24 V DC power supply to the connected device. The transmission rate on the interface is 10 Mbit/s or 100 Mbit/s.

Requirement

Note

The service interface X127 is used for commissioning and diagnostics. Do not use it for long-term monitoring.

Description

Table 6-16 Interface X127

X127	Pin	Designation	Technical specifications
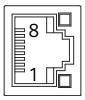 RJ45 socket	1	TXP	Transmit data +
	2	TXN	Transmit data -
	3	RXP	Receive data +
	4	P24_POE	Power supply over Ethernet, 24 V DC
	5	P24_POE	Power supply over Ethernet, 24 V DC
	6	RXN	Receive data -
	7	M_POE	Power supply over Ethernet, reference ground
	8	M_POE	Power supply over Ethernet, reference ground

LED states

For diagnostic purposes, the service interface X127 is equipped with LED indicators.

Table 6-17 LED states of the service interface X127

LED	Status	Description
LED 1	Off	Missing or faulty link
	Continuous light	10 or 100 Mbit link is available
LED 2	Off	Not connected
	Flashing light	Sending or receiving data

More information

For more information about cable requirements, see Section "RJ45 connectors (Page 63)" and Section "Cables and connectors (Page 134)".

Commissioning (web server) 7

7.1 Introduction

Description

The web server commissioning tool is integrated in the converter.

The web server supports you throughout the service life of the application:

- Online commissioning
- Diagnostics
- Monitoring and operation
- Service and maintenance
- Support

After commissioning has been completed, the settings made are applied and transferred to the converter.

The web server has multi-level industrial cybersecurity functionality.

More information

For more information about security settings in the web server, see Configuration Manual Industrial Cybersecurity (https://support.industry.siemens.com/cs/ww/en/view/109975311).

7.2 Fundamentals

7.2.1 Requirements for commissioning

Description

- You have correctly installed the converter and the motor.
- You have mounted the motor including encoder onto the mechanical system.
- You have connected the motor to the converter.
- You have connected the converter and the operating unit via the service interface X127 or WLAN.
- You have switched on the converter supply voltage.
- The converter has ramped up.

7.2.2 Supported operating units

Description

The following operating units are supported for the connection with the web server:

- Programming device, PC, notebook
- Smartphone, tablet PC
- SINAMICS SDI Pro 5.5"

The optional component Smart Adapter establishes a WLAN for the wireless connection between the converter and mobile devices.

As a result of the responsive design, content is adapted to the screen size of the operating unit.

More information

For more information about SINAMICS SDI Pro 5.5", see Section "SINAMICS SDI Pro 5.5" (Page 77)".

For more information about SINAMICS Smart Adapter, see Section "SINAMICS Smart Adapter (Page 76)".

7.2.3 Supported browsers

Description

The web server supports the following browsers:

- Apple Safari
- Google Chrome
- Microsoft Edge
- Mozilla Firefox

Siemens recommends that you use the latest stable versions of these browsers for optimal performance and security. You can find detailed information about the latest stable versions on the official web sites of the browsers.

7.2.4 Communications interface

Description

The following interface is available for accessing the converter:

Interface	Information
Service interface X127	The default access to the web server is via the service interface X127.
	Service interface X127 is intended for commissioning and diagnostics, which means that it must always be accessible.
	Defaults: • IP address: 169.254.11.22 • Subnet mask: 255.255.0.0 • "Data transfer via HTTPS" is activated in the factory setting.
	Restrictions: • Only local access is allowed. • Only local networking in a closed and locked electrical cabinet is permissible. • For remote access to the electrical cabinet, you must apply additional Industrial Cybersecurity measures to prevent misuse through sabotage, data manipulation by unqualified persons and interception of confidential data.

7.3 Getting started

7.3.1 Settings for brand-new converters

Overview

The basic settings are required before performing the first commissioning for a brand-new converter.

Requirement

- The operating unit is connected to the converter via the service interface X127 or WLAN.
- The web server is accessed with the IP address (default: 169.254.11.22).

Description of function

If the web server is called, a forwarding function starts automatically to define the following settings:

- Basic settings (Page 183)
- Security settings (Page 183)

7.3.2 Calling the web server

Overview

The converter is commissioned via the user interface of the web server.

Requirement

- You have connected the converter to the operating unit via the service interface X127 or WLAN.
- If you have configured security settings for the web server, make sure that guest access to the web server is active.
  If guest access is not permitted, you must log in with your user name and password when calling the web server.

Procedure

To access the web server, enter the IP address of the converter, e.g. https://169.254.11.22, in the browser.

Result

- If you call the web server for the first time, you are prompted to define the basic settings.
- If you have already made the basic settings, then the web server starts and opens the home page. You can commission the converter, troubleshoot it, operate it, monitor it or call up support.

7.3.3 Basic settings

Overview

Initial basic settings are defined in the function view.

Requirement

The web server is being called for the first time.

Description of function

The basic settings are as follows:

- Preferred language of the user interface
- Converter date and time

After these entries have been made, using the "Next" button, you can continue to the Security Wizard.

7.3.4 Security settings

Overview

One of the following security options can be selected after the basic settings:

- "Configure security settings" in the Security Wizard
  The Security Wizard offers the following settings for configuration:
  - User Management & Access Control (UMAC)
  - Access to the integrated web server via the service interface with HTTP or HTTPS protocol
  - Drive data encryption

  Comprehensive protection against data manipulation requires that security settings are configured.
- "Continue with low security settings"
  If you continue with low security settings, then UMAC is deactivated.

Siemens recommends that you configure the security settings before the converter goes into operation. You can also access the security settings via menu "Protection & Security (Page 222)".

Requirement

NOTICE
Data manipulation due to low protection An inadequately protected converter makes it easier for potential attackers to access the drive data. Data manipulation can cause the drive to malfunction or damage it. • Only use the low security settings in exceptional cases and only if an information security risk analysis finds that it is reasonable to do so. • Configure the settings for full protection immediately after adding a drive or several drives to the project.

Procedure

If you select "Configure security settings", proceed as follows to finish the security settings in the Security Wizard:

1. Define the settings for UMAC on the following pages:
   - "Activate User Management & Access Control"
     If UMAC is activated, it can only be deactivated by a full reset of the drive to factory settings.
     For more information about the full reset to factory settings, see Section "Full reset of all device settings (Page 531)".
   - "Administrator setup"
     Specify the user name and password of the drive administrator, who has all available rights of the drive.
     Runtime role "Drive Administrator" is assigned to the administrator. You can change the assignment in "System > User management".
   - "Guest access configuration"
     Choose whether users have read-only guest access to the drive without user name and password.
     With guest access enabled, users can also acknowledge events without logging in.
2. Define the settings to access the web server:
   - "Web server activation"
     The factory setting to access the web server is service interface X127 with HTTPS protocol. It is also possible to activate/deactivate web server access via the service interface X127 with HTTP protocol.

3. Configure the optional drive data encryption:
   – "Drive data encryption"
     The function encrypts UMAC user data and passwords in the backup file and on the memory card of the converter.
     Assign an additional password for encryption of the drive data if you enable the function.
     To use the function independent of UMAC, deselect option "Activate UMAC for the drive" on page "Activate User Management & Access Control".
4. Check the configured settings:
   – "Summary"
     The summary provides an overview of the configured settings.
5. Click on "Finish".

Result

The settings are applied.

You can continue with one of the following options:

- Continue with quick setup
- Continue with advanced setup
- Continue with the web server home page

More information

For more information about "Drive data encryption", see Configuration Manual Industrial Cybersecurity (https://support.industry.siemens.com/cs/ww/en/view/109975311).

7.3.5 Home page

Description

The web server interface depends on the converter. The web server view of your converter may vary from that shown here depending on your product and firmware version.

The following figure shows the basic structure of the web server pages.

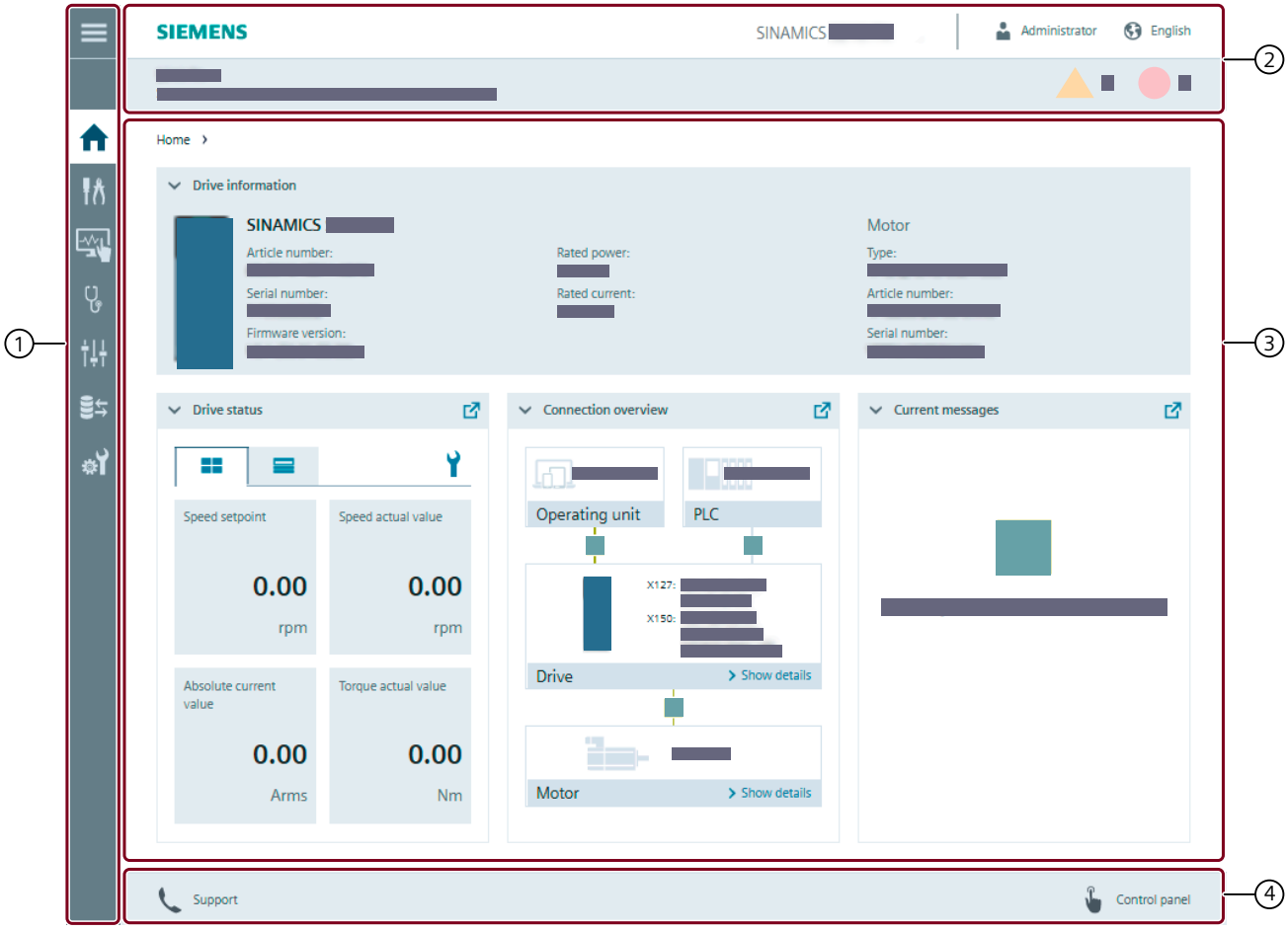

① Navigation bar

The navigation bar provides access to converter functions and menus.

② Status bar

The status bar displays the converter product name and the converter status. Log in at the status bar and select the user interface language.

③ Main window

The main window provides information about converter functions and allows settings to be made.

④ Action bar

When manual saving is activated in menu "System" > "Settings", then symbol

is also shown in the action bar.

Figure 7-1 Structure of the web server (example)

7.3.6 Making the operating instructions available for the web server information system

Overview

For selected topics, you can use the information system of the web server to directly access the product documentation. To do this, you must make the product documentation available on a prepared memory card.

Requirement

- You have an empty memory card on which you can save the product documentation.
- You have connected a suitable memory card reader to your PC.

Procedure

To make the project documentation available for the web server information system, proceed as follows:

1. Download the product documentation to your PC
   The project documentation for the web server information system can be found on the Internet:
   Operating Instructions (https://sieportal.siemens.com/su/bjPpg)
   ZIP archive "Multimedia document" is located under "Download".
   The multimedia document contains file "product_manual_MMYY_lg-LG.zip".

Explanation of file name "product_manual_MMYY_lg-LG.zip"		
	Example	**Explanation**
product	S200, G220	Abbreviated converter name
manual	op_instr (= operating instructions)	Abbreviated product documentation
MMYY	0324	Month and year that the manual was published
lg-LG	en-US (= US English)	Language code

2. Unzip the file into a folder with the ZIP file name, e.g. "product_manual_MMYY_lg-LG".
3. Insert a memory card into the memory card reader of your PC.
4. In the root directory of the memory card, create a folder called "DOC".
5. Copy the unzipped folder, e.g. "product_manual_MMYY_lg-LG", into directory "DOC" on the memory card.

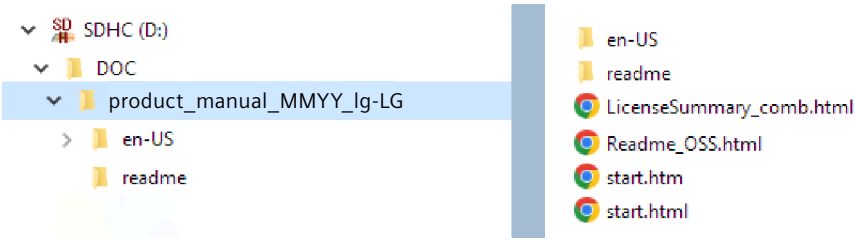

6. Eject the memory card from the PC.

7. Remove the memory card from the reader.
8. Insert the memory card into the converter.

Result

You have made the product documentation in one language available for the web server information system.

For selected topics, you can access the content of the product documentation via the context-sensitive information system.

You can copy the product documentation in other languages to the memory card if there is sufficient space available on the memory card.

7.3.7 Using the web server information system

Overview

The web server supports you based on an integrated, multi-level information system.

Requirements

If you have provided the product documentation for the web server information system, then the web server also displays linked content of the manual.

Description of function

Product-specific information and settings are covered over in the following diagrams.

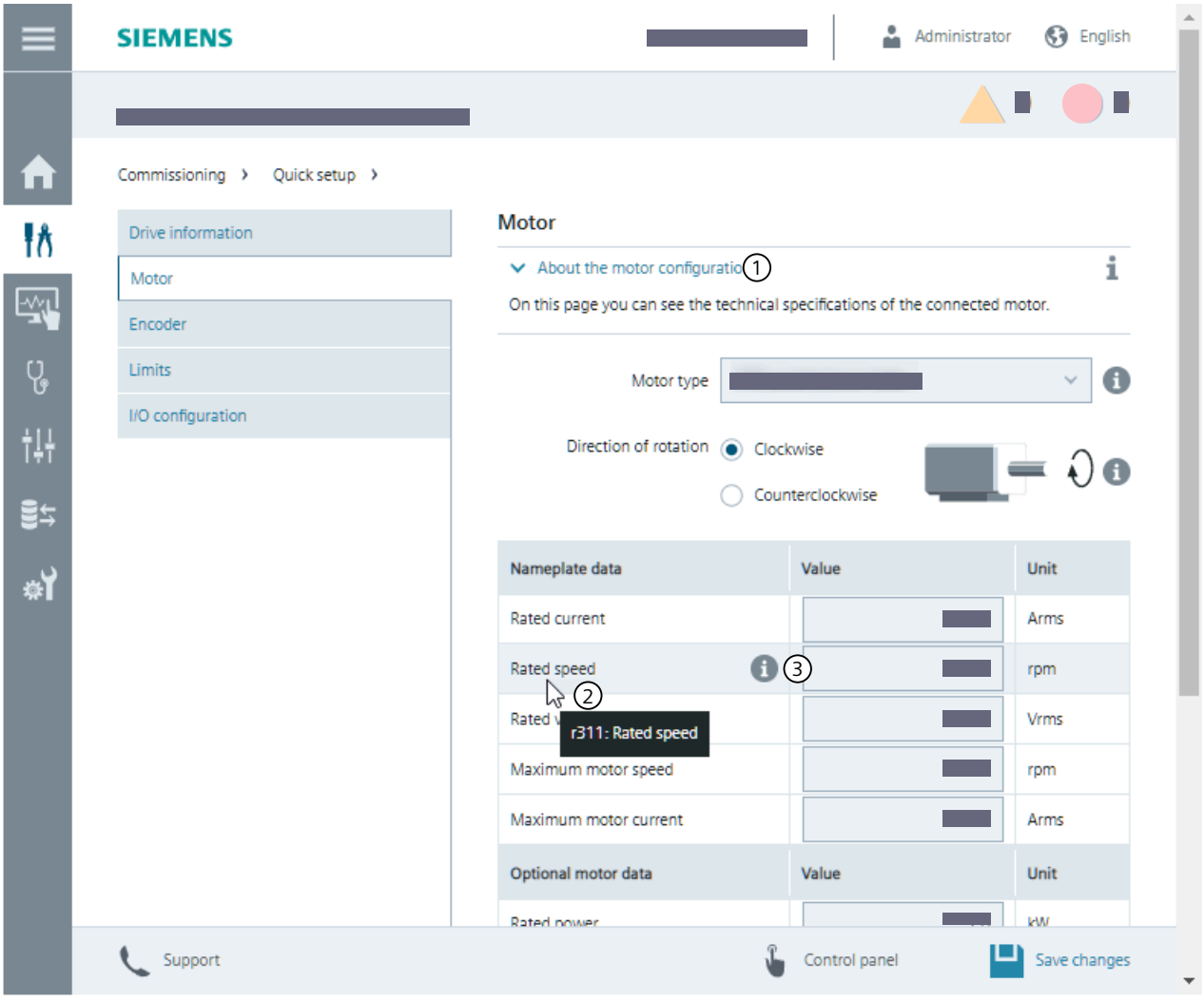

① Clicking or tapping on the header or on the associated icon displays or hides general information about the function of the current view.

② Point with the mouse pointer or tap on the setting you need information about.

The setting is highlighted and the assigned info icon appears.

If you hold the mouse pointer or keep the tap pressed on the setting for longer, a tooltip ("③") with the context-sensitive short information is displayed.

When you move the mouse pointer to the info icon, the icon and the mouse pointer change their appearance.

If you now click or tap on the info icon, a context-sensitive help window appears with detailed information.

Figure 7-2 Information displayed in the current view

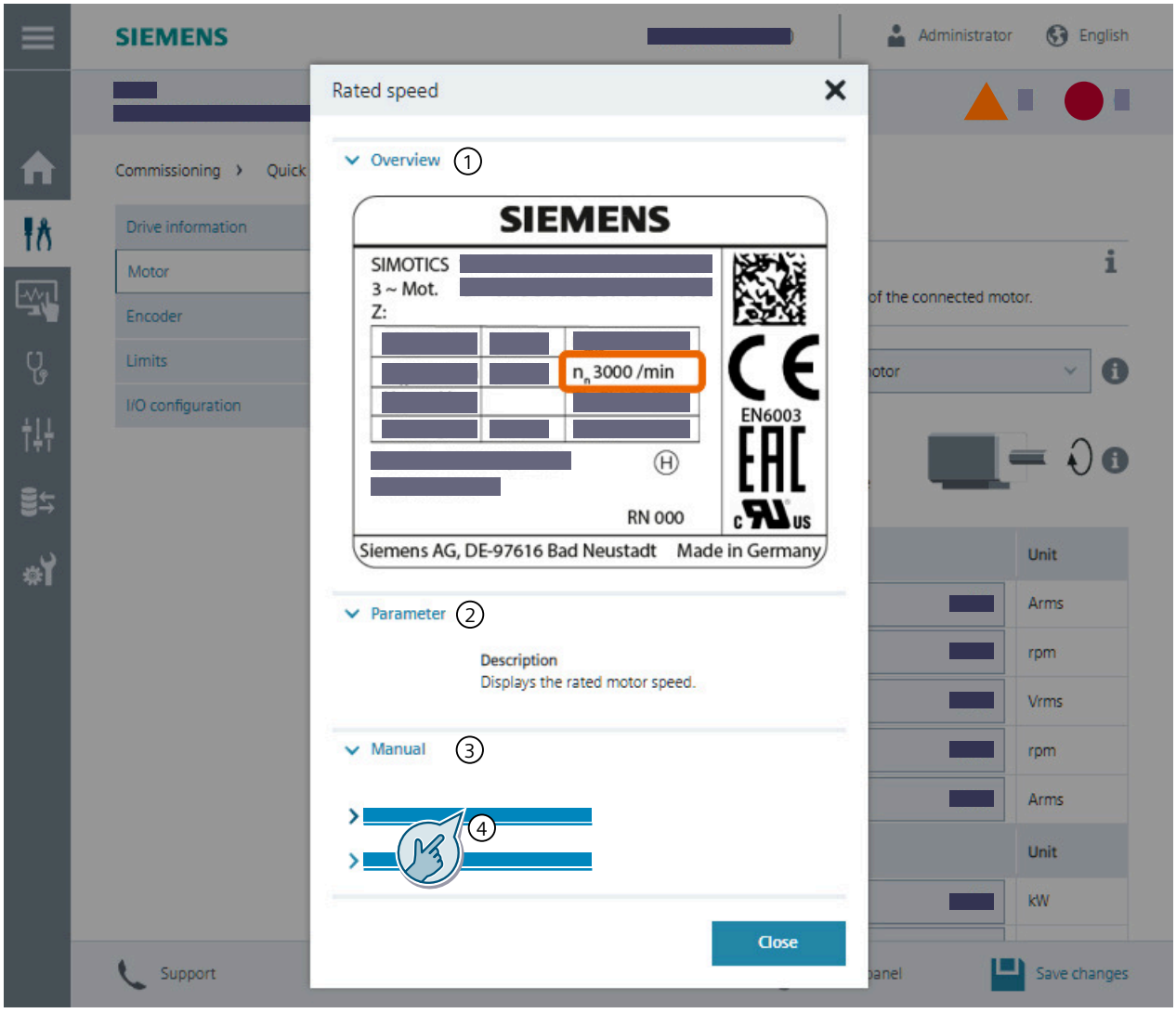

Clicking or tapping on the header or the associated icon does the following:

① Displays and hides general information about the meaning or function of the setting.

② Displays and hides detailed information about the parameter.

③ Displays and hides links to the operating instructions.

④ A click or tap on a link displays the linked information of the operating instructions.

Figure 7-3 Product-dependent information in a context-sensitive help window

7.3.8 Reloading pages

Procedure

Reload the web server function views in the browser of your operating unit by pressing the <F5> key or by clicking the refresh button, in the following cases for example:

- The web server is not responding.
- The buttons of the function view are inactive or unlabeled.

7.4 Functions and menus

7.4.1 Commissioning

7.4.1.1 Complete commissioning workflow

Overview

The web server guides users step-by-step through the drive commissioning.

Description of function

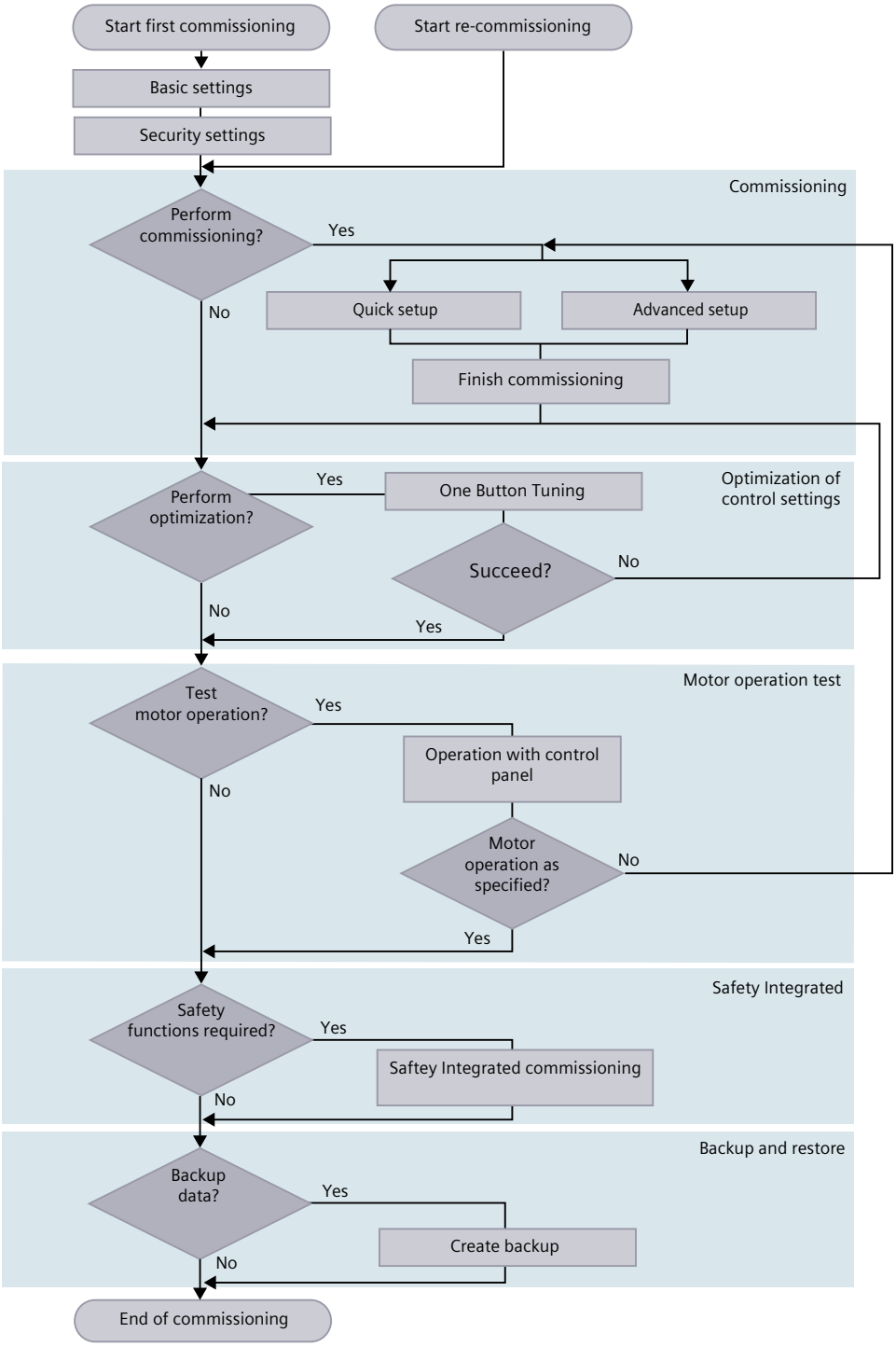

Figure 7-4 Commissioning sequence

Commissioning involves the following steps:

- Basic settings:
  If the converter has already been commissioned, then the web server skips the basic settings. The following settings are required for a brand-new converter:
  - Language, date, time
- Security settings:
  The settings are configured with the help of the Security Wizard.
  You can find more information in Section "Security settings (Page 183)".
- Commissioning
  Menu "Commissioning"
  The web server has 2 commissioning modes:
  - Quick setup
  - Advanced setup

  In the read mode, the web server provides an overview of the commissioning. This allows you to become familiar with the commissioning steps, individual drive options, and functions or to check settings. Configuration is not possible in the read mode.
- Optimization:
  Menu "Commissioning" > "Optimization"
  The Optimization function measures the mechanical drive train using short test signals and adapts the controller parameters to the mechanics installed.
- Safety Integrated commissioning:
  Menu "Commissioning" > "Safety Integrated"
  Setting of the Safety Integrated Functions
- Motor operation test:
  Action bar > "Control panel"
  Test of motor operation using the control panel in jog mode or continuous operation
- Backup and restore:
  Menu "Backup and restore"
  Siemens recommends a backup of the drive settings after commissioning.

More information

For more information about user management and security settings, see Configuration Manual Industrial Cybersecurity (https://support.industry.siemens.com/cs/ww/en/view/109975311).

7.4.1.2 Commissioning

Overview

Important converter parameters are set during commissioning. After commissioning has been completed, the converter knows, for example, the data of the connected motor and has adapted its control interfaces to the specific requirements.

Requirement

- The drive system has been configured. The components are wired.
- Web server access is active.
- No other user controls the converter via the control panel.
- No other user has started commissioning.
- When UMAC is activated, then the required rights are assigned, for example, through the role "Drive Engineer and Service".

Description of function

Product-specific information and settings are covered over in the diagram.

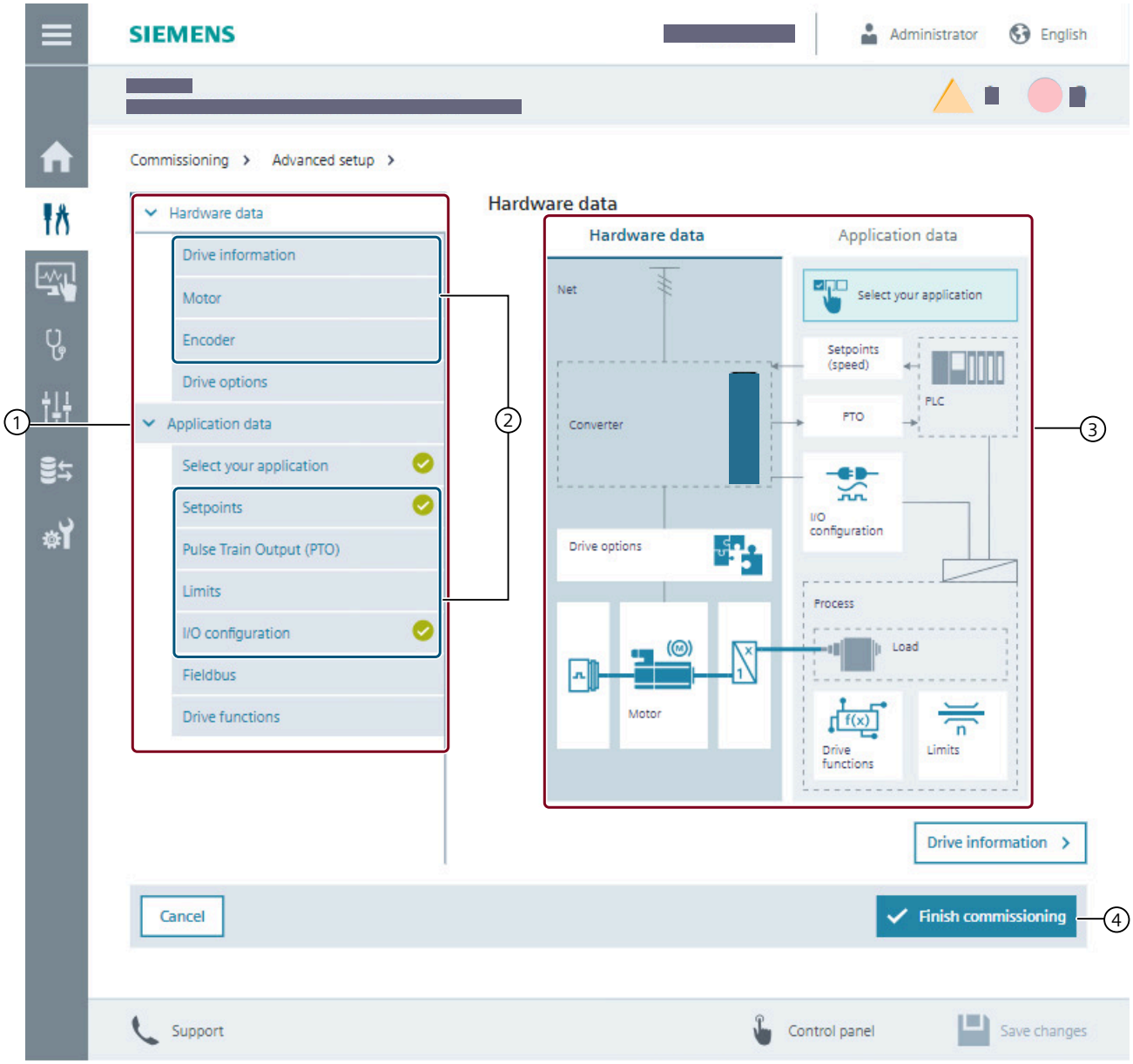

① Navigation through advanced setup
② Reduced navigation by quick setup
③ Function views of the individual commissioning steps
④ Control bar to cancel or complete commissioning

All values entered are valid.

The drive has overwritten the manually changed values.
Check values.

To complete the commissioning, at least one of the values will have to be changed.

Figure 7-5 Advanced commissioning using the web server

The web server has 2 commissioning modes:

- Quick setup
  Quick setup comprises the basic settings that are required to commission the converter. For example, this includes motor data, limit values and the configuration of inputs and outputs. The default control mode in the quick setup is the "Position control (PTI)" mode. You can change the control mode in the "Advanced setup".
- Advanced setup
  The advanced setup contains all settings of the quick commissioning, plus additional options and functions.
  With advanced setup, drive options and functions that match the specific application can be configured.

The commissioning wizard runs through the commissioning menu.

The converter creates a restore point when commissioning is started. The converter saves the changes after every commissioning step. If you cancel commissioning before it has been completed, then the converter is reset to the restore point.

Table 7-1 Web server commissioning menu

Commissioning step	Description
Hardware data	
Drive information	The web server provides an overview of the drive system: • Converter • Motor • Encoder • Motor holding brake The drive name can be edited.
Motor	The data of the motor being used is displayed. The direction of rotation of the motor can be selected.
Encoder	The data of the encoder being used is displayed.
Drive options	If you use an external braking resistor with thermal model monitoring, manually enter the technical data of the braking resistor.
Application data	
Select your application	Select one of the following control modes according to your application demand: • Position control (default) • Speed control • Torque control Note that the configurable settings in function views "Setpoints", "Limits", "I/O configuration", "Fieldbus", and "Drive functions" vary depending on the selected control mode.

Commissioning step	Description
Setpoints	Depending on the selected control mode, the following settings can be configured: **Position control mode** • Input configuration – Pulse train input channel Select between the 24 V single end pulse train input channel and the high-speed 5 V differential pulse train input channel. – Pulse train input form Select a pulse train input form according to the setting of the higher-level controller. – Filter time For the high-frequency input signal (> 200 kHz), Siemens recommends that you set the filter time to 0.04 us. • Electronic gear ratio – Transmission ratio Set the number of setpoint pulses per motor revolution to define the motor revolutions and then define the distance of mechanical movement. – Position setpoint smoothing filter Configure smoothing time for the moving average filters and the low pass filter to achieve a softer control behavior. **Speed control mode** • Speed setpoint source Select whether the converter receives the speed setpoint from a local source (analog or digital input) or from a remote source via Modbus RTU. **Torque control mode** • Torque setpoint source Select whether the converter receives the torque setpoint from an analog input or a digital input.
Pulse Train Output (PTO)	The following settings can be configured through "Output configuration": • PTO direction change Select the PTO direction for an application of fully closed-loop position control using PTI and PTO. The direction output defines the traversing direction. • PTO output frequency limit Set the maximum output frequency of the pulse train output. The output frequency represents the velocity and the number of output pulses for the section to be traversed. • PTO zero mark offset Set the zero mark offset to shift the zero mark within one mechanical revolution. The following settings can be configured through "Electronic gear ratio": • Gear ratio configuration Set the number of PTO pulses per motor revolution to transfer the distance of mechanical movement to a controller

Commissioning step	Description
Limits	Limit values can be set and adjusted in the table. Changes made are automatically reflected in the linked diagram.
I/O configuration	In the table, a function can be assigned to an input or output of the terminal. Specified functions can be selected. Do not assign a function to more than one input or output.
Fieldbus and telegrams	Configure the fieldbus settings of your converter.
Drive functions	The "Setup_functions" parameter list includes parameters that can only be configured in commissioning mode and are not accessible through the advanced setup menu. The suggested values for these parameters are preassigned in the factory settings. The "Setup-functions" list is created and managed under "Parameters" > "Parameter List". You can add parameters to the list. This allows uniform access to the parameters of a drive function. Further configuration options are displayed by clicking on the tool icon .

The converter retentively saves the settings after commissioning has been successfully completed.

7.4.1.3 Optimization

Overview

After commissioning, you can use the function One Button Tuning (OBT) to optimize the converter settings.

With One Button Tuning, the mechanical drive train is measured using short test signals. In this way, the controller parameters are optimally adapted to the existing mechanical system.

Requirement

To reduce the stress on the mechanical system, the torque limit can be reduced before OBT. After OBT has been completed, the previous value can be set again.

NOTICE
Material damage caused by an impermissible direction of motion of the motor One Button Tuning runs the motor in both directions. Impermissible directions of motion can damage the machine or installation. • If a particular direction of motion of the motor is impermissible, do not carry out One Button Tuning.

Description of function

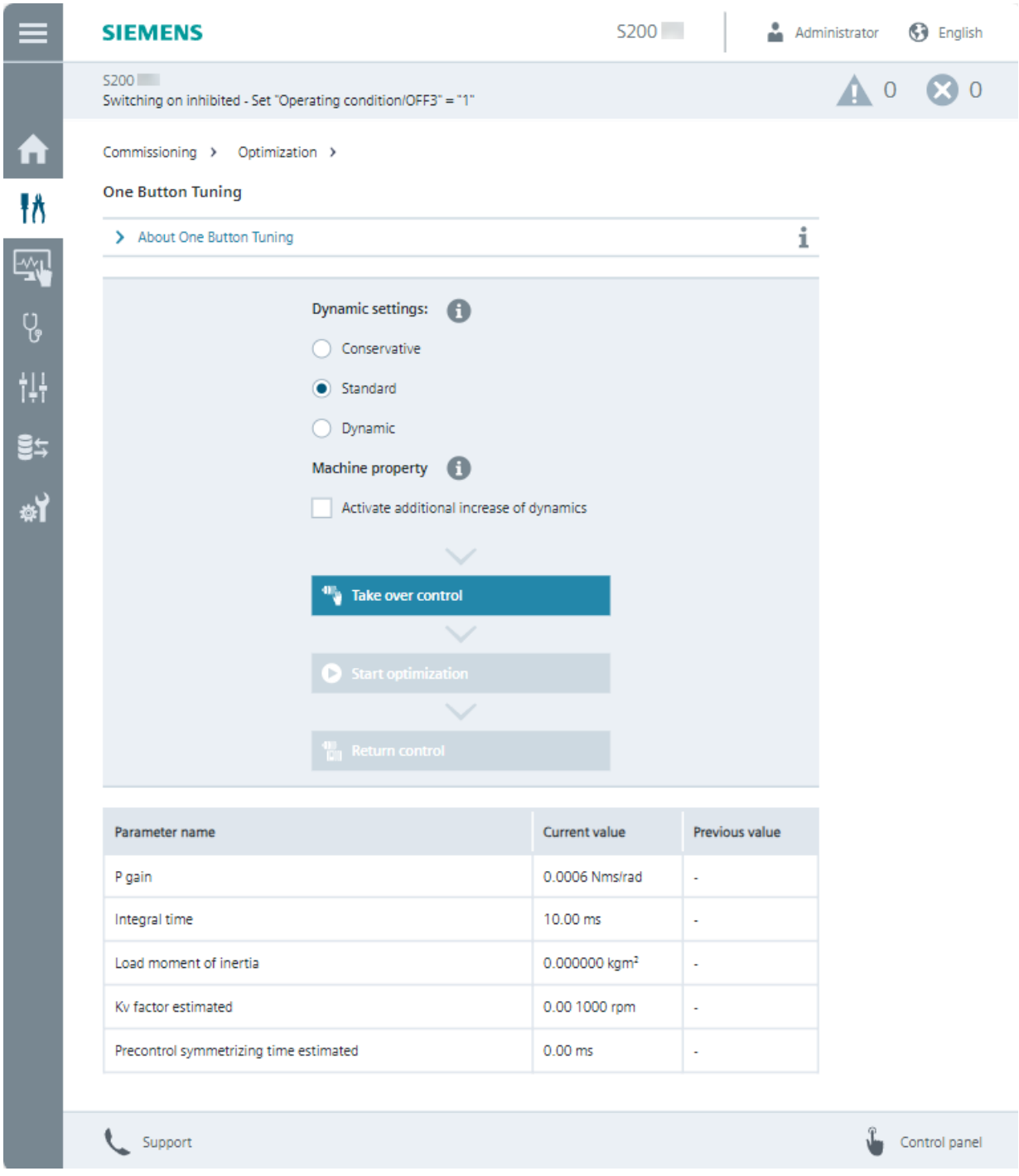

Figure 7-6 One Button Tuning

The controller settings are optimized using the following settings:

- "Dynamic settings"
  - Conservative
    60% dynamic response; speed precontrol without torque precontrol
  - Standard
    80% dynamic response; speed precontrol with torque precontrol
  - Dynamic
    100% dynamic response; speed precontrol with torque precontrol

  Note

  By default, the torque precontrol is implemented in the speed controller. You can also implement torque precontrol in the position controller. For more information, see "One Button Tuning (Page 351)".

- "Machine property"
  The "Activate additional increase of dynamics" option increases the proportional gain of the optimized speed control. The dynamic response is increased. The speed controller becomes faster.
  If the dynamic factor is increased too much, the speed controller may become unstable.
- "Take over control" and "Return control"
  Take over master control before starting to optimize the controller.
  Return master control back to the converter once the controller has been optimized.
- "Start optimization"
  - Enter the angle of rotation (rotation limit) through which the motor and the connected machine are permitted to turn for the required measurements (e.g. 360°) without the mechanical system being damaged. Sensible controller parameters are obtained from an angle > 90°.
    When a negative angle is entered, then the motor moves in the opposite direction.
  - The table shows how the settings have been changed by OBT.

If OBT was not successful, then optimization must be repeated with other settings.

7.4.1.4 Testing the converter configuration

Overview

After commissioning, the web server allows you to test the converter configuration in jog mode or continuous motion via the control panel.

Description of function

To test the configuration, the control panel must be open and the speed setpoint entered.

There are two ways of opening the control panel:

- Button "Finish commissioning" > Dialog query with selection option "Open control panel"
- Action bar > "Control panel"

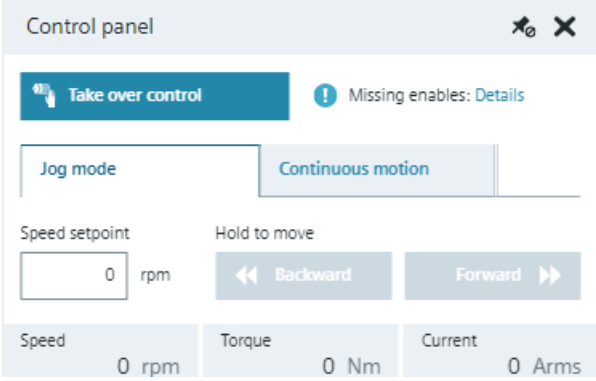

Figure 7-7 Testing the converter configuration via the control panel

More information

For more information, see Section "Control panel (Page 229)"

7.4.1.5 Safety Integrated commissioning (for S200 PTI only)

Overview

Commissioning the Safety Integrated functions of the converter includes the following configurations:

- Selecting the functions
- Parameterizing the functions as required for the application
- Configuring the fail-safe digital inputs

Requirement

- The drive system has been configured. The components are wired.
- Web server access is active.
  Commissioning using the web server is only possible if access to the web server via interfaces X127 and/or X150 was selected in the security settings.
- If UMAC is activated, the necessary rights needs to be assigned, e.g. via the "Drive Safety Engineer" role.

Description of function

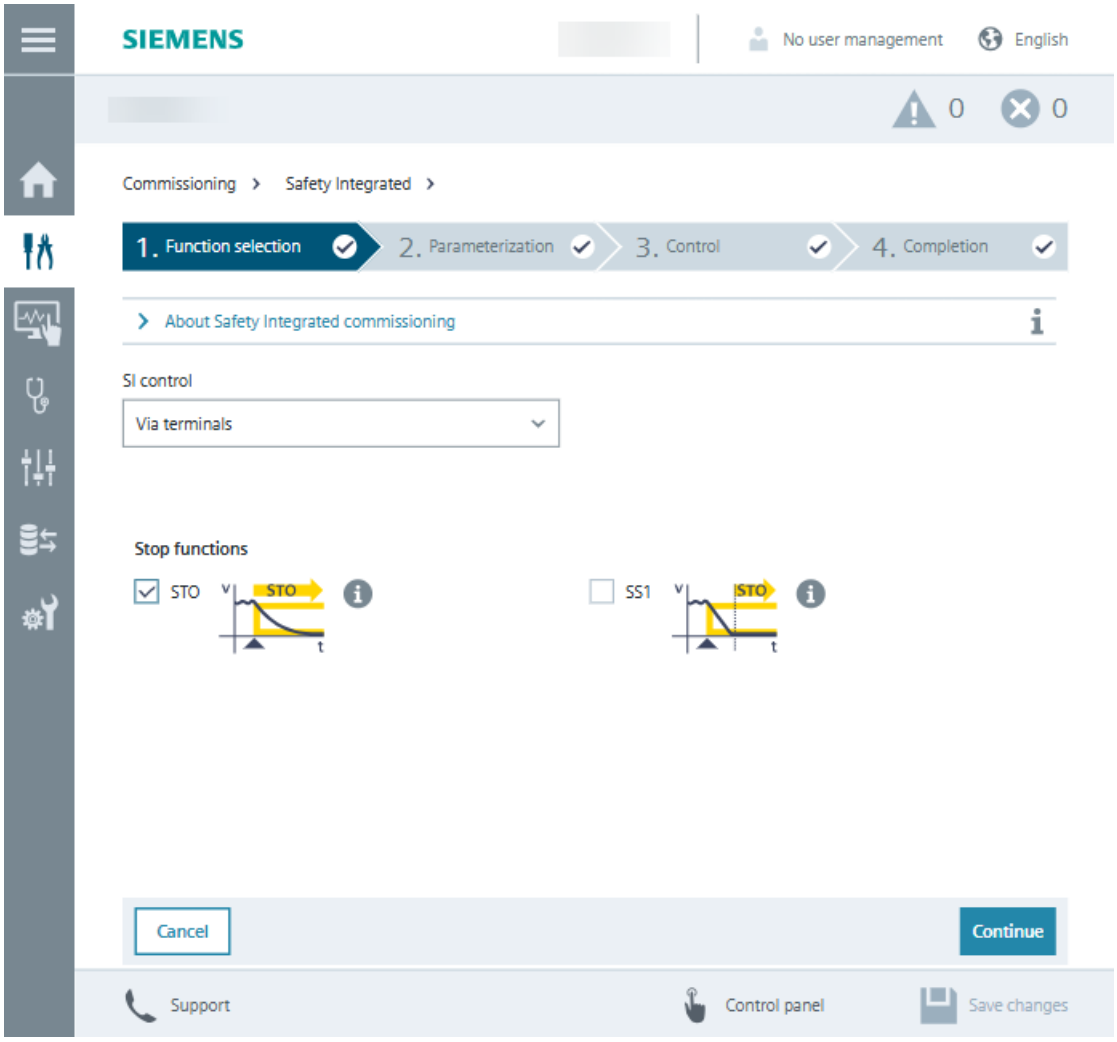

Figure 7-8 Safety Integrated commissioning

Changes to Safety Integrated settings are only possible in the "Safety Integrated commissioning" mode. The drive is in the safe state as soon as the commissioning mode is active. Safe Torque Off (STO) is active.

Commissioning of Safety Integrated must be completely run through. No settings are applied if an interruption occurs during commissioning.

The activated user management protects against unauthorized changes to Safety Integrated settings. Login takes place when the web server starts. After this, only authorized users have the necessary rights to change Safety Integrated settings. The "Edit Safety Integrated application" right is a component of the "Drive Safety Engineer" role.

The converter creates a restore point when Safety Integrated commissioning is started. The converter saves the changes after every commissioning step. The converter is reset to the restore point if Safety Integrated commissioning is canceled.

For fast navigation through Safety Integrated commissioning, for example to check the settings, the web server has a read-only mode.

Safety Integrated commissioning involves the following steps:

1. Function selection
   - Selecting the Safety Integrated control type.
   - Selecting the available Safety Integrated Functions depending on the control type.
2. Parameter assignment
   Configuration of the activated Safety Integrated Functions
   - Function-dependent display of the converter parameters
     The function view shows a graphic of the function. The parameters of the function are listed in the context-sensitive table.
     The parameter values can be changed. When required, additional parameters are displayed.
3. Control
   - Parameterizing the Safety Integrated control type
   - Configuring F-DI self-test
4. Completion
   The configurations are completed and applied by clicking on "Finish".
   - The parameter assignments are made.
   - Checksums are calculated.

More information

More detailed information is provided in Chapter "Safety Integrated (for S200 PTI only) (Page 328)".

7.4.2 Monitoring and operation

7.4.2.1 Drive status

Overview

Function view "Drive status" shows the current status of the converter.

Description of function

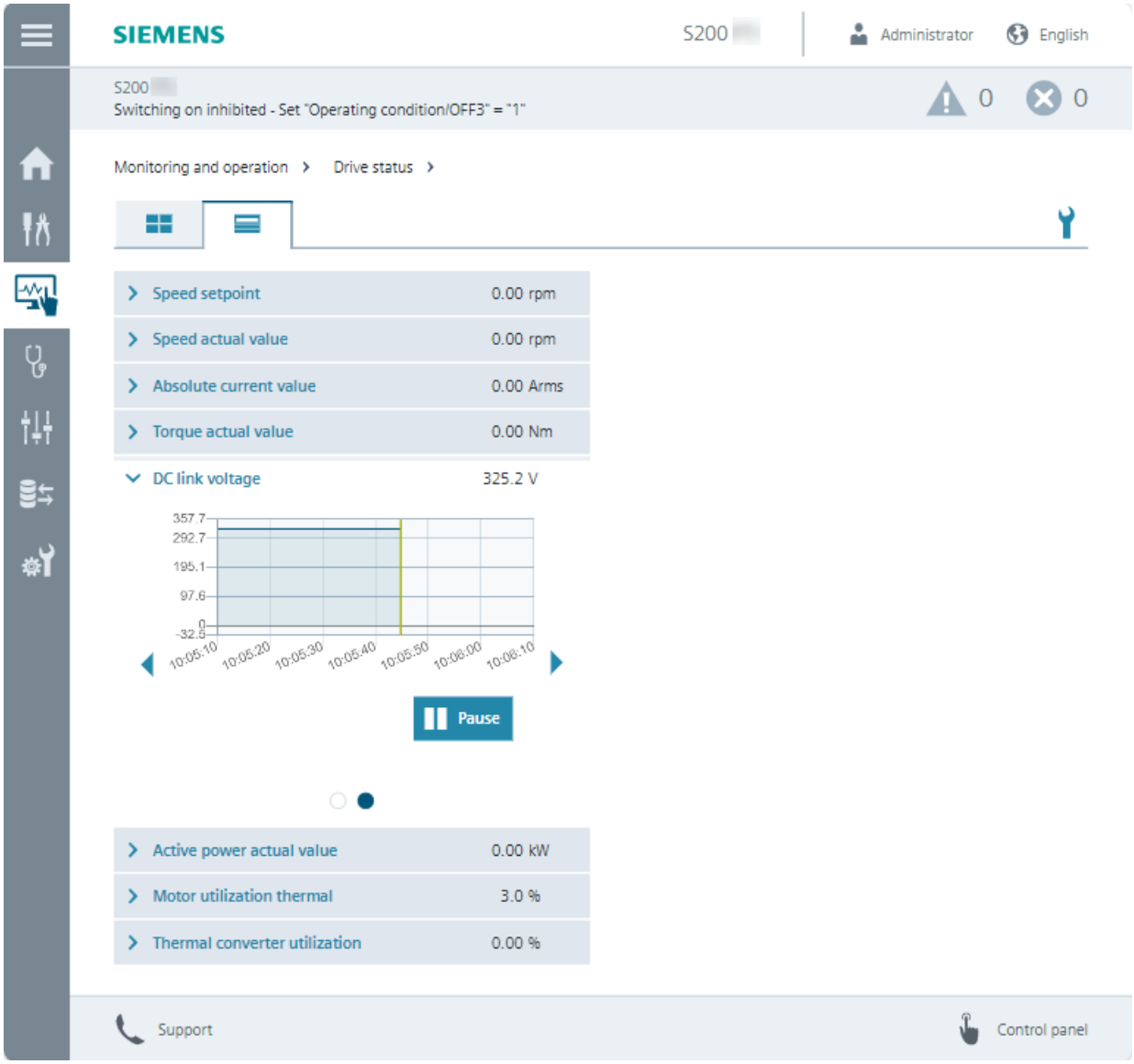

Figure 7-9 Drive status

The drive information displayed is preset in the factory setting, and when required, can be adapted using symbol . If user management is active, the "Edit web server configuration" right is required in order to make changes.

Values are indicated as follows:

- Factory setting: 8 values are displayed
- It is possible to display all values completely

The drive status is displayed as follows:

- : Individual values are continuously displayed
- : Individual values and trend diagrams are continuously displayed

7.4.2.2 Inputs/outputs

Overview

The function view "Inputs/outputs" shows the status of all inputs and outputs.

Description of function

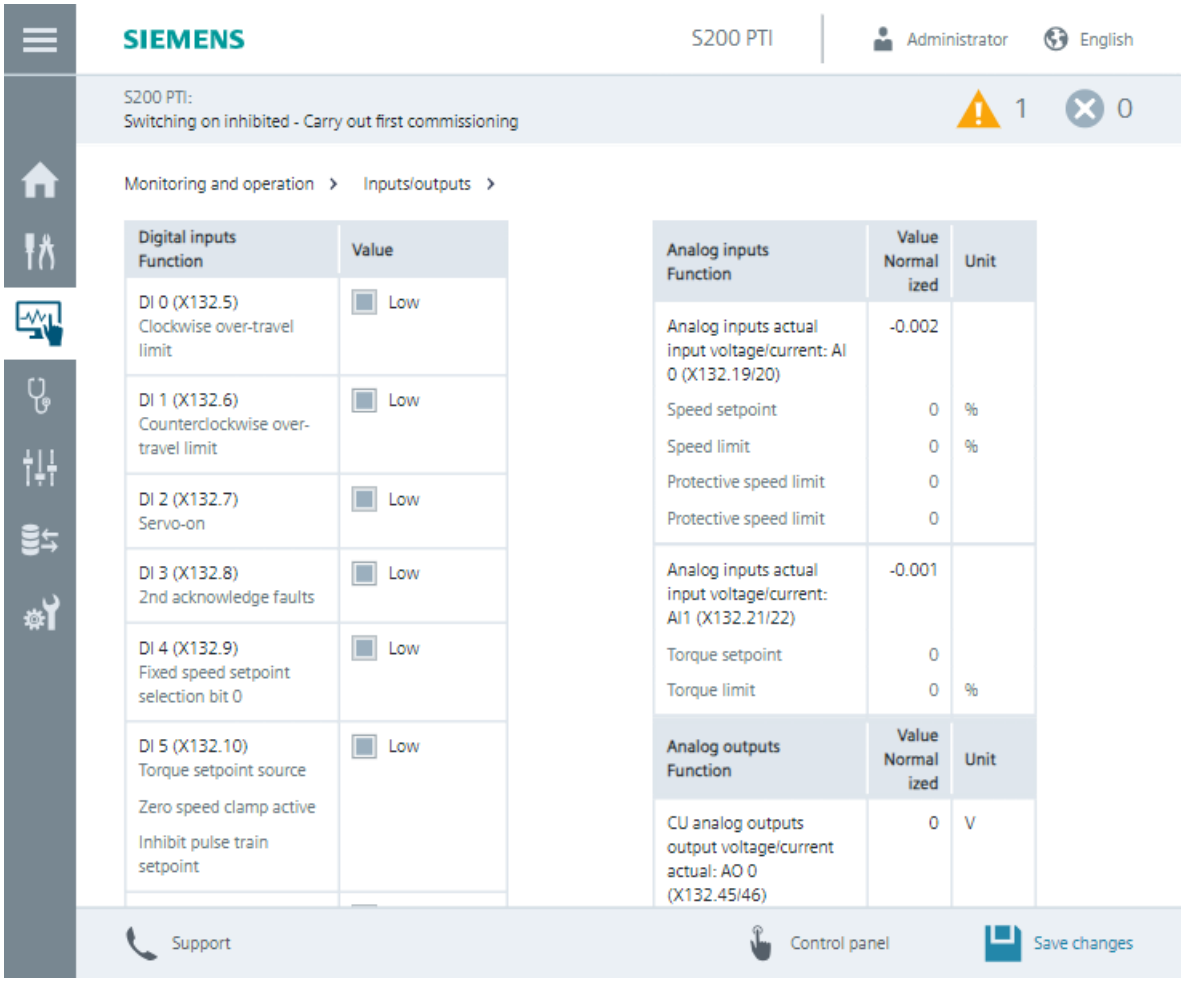

Figure 7-10 Inputs/outputs

The function view "Inputs/outputs" shows the following information:

- Name and terminal marking of the input and output
- Function of the input and output
- Actual value, e.g. "high" or "low" for a digital input

7.4.3 Diagnostics

7.4.3.1 Messages

Overview

The function view "Messages" shows active and historical messages.

Description of function

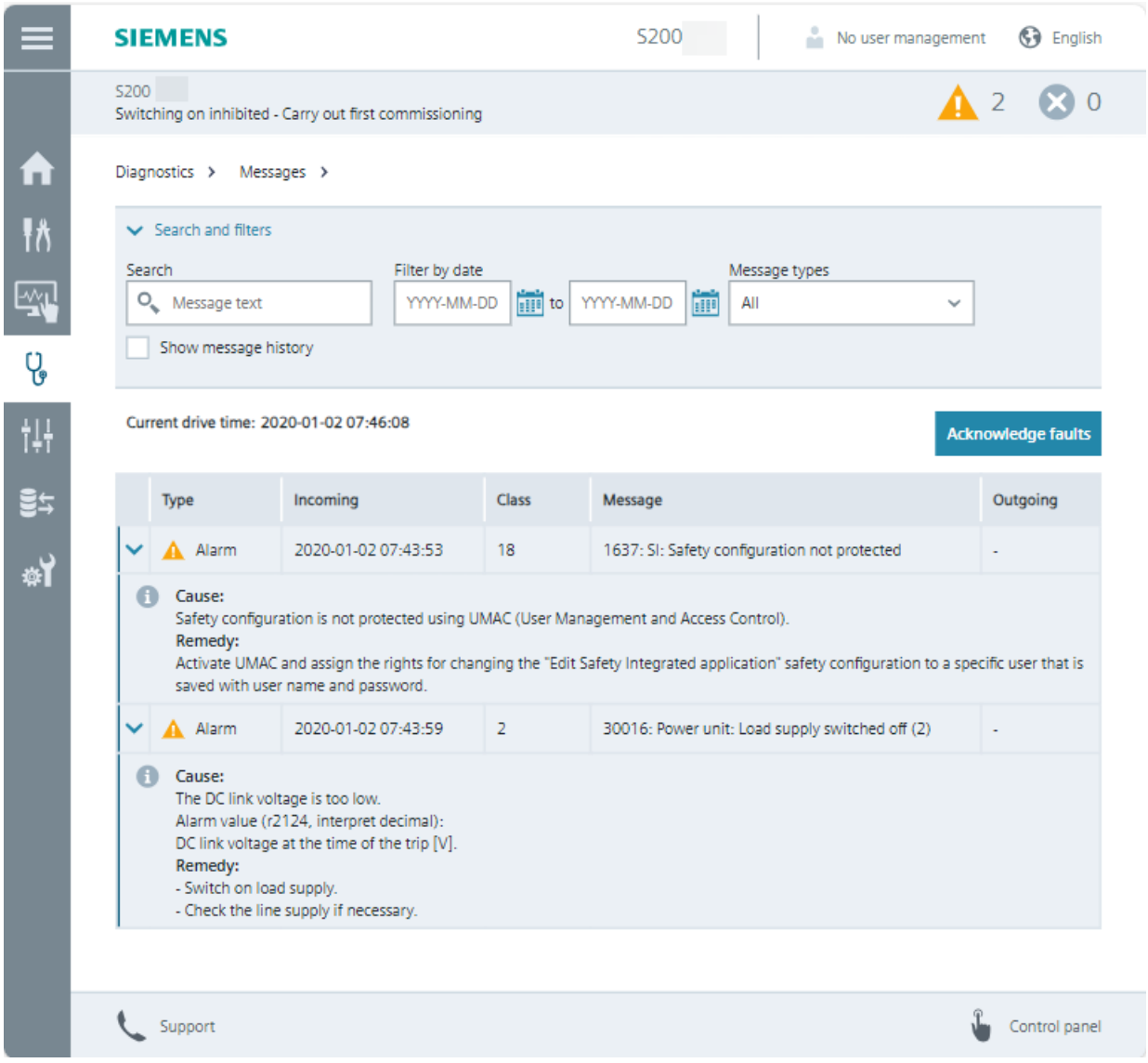

Figure 7-11 Messages

With search and filter options, the alarms and faults can be narrowed down.

The message history can be optionally displayed.

Selecting messages

Search	Enter a keyword
Filter by date	Select a date or time interval
Message types	Select the message type that should be displayed: • All • Fault • Alarm

Displaying messages

Type	Displaying the message type: • Alarm • Fault
Incoming	Time when the message was received
Class	Assigning the message to a message class according to PROFIdrive • The message number is output on all operating units, e.g. PC.
Message	Specification of the message number with message text
Outgoing	Time when the message went • Faults are given the status "Outgoing" if the following are true: – The causes have been eliminated. – The message has been acknowledged.
›	Selection for more information: • Description of the message with cause and remedy

7.4.3.2 Diagnostics buffer

Overview

Function view "Diagnostics buffer" provides information about all system-relevant operations, e.g. commissioning, new ramp-up, generation of a certificate.

Description of function

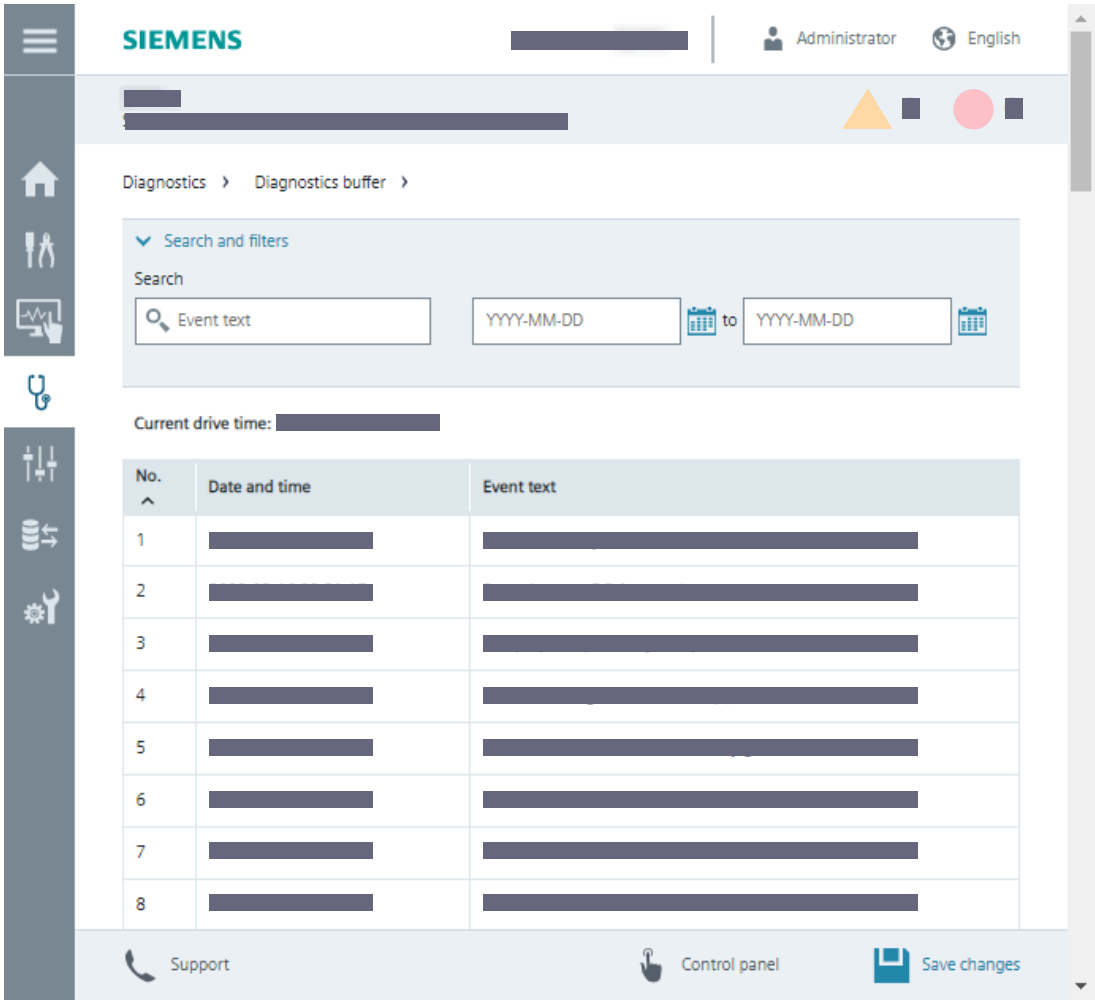

Figure 7-12 Diagnostics buffer

Reading out the diagnostics buffer facilitates converter diagnostics and supports fault analysis.

The search can be limited by searching for keywords and using the filter function according to date.

The diagnostics buffer can only be cleared by performing a manual reset to factory settings with a memory card. For more details, see Section "Full reset of all device settings (Page 531)" .

The diagnostics buffer is kept when restoring factory settings via menu "Backup and restore".

7.4.3.3 Safety Integrated (for S200 PTI only)

Overview

Function view "Safety Integrated" provides information about the Safety Integrated Functions that have been enabled.

Description of function

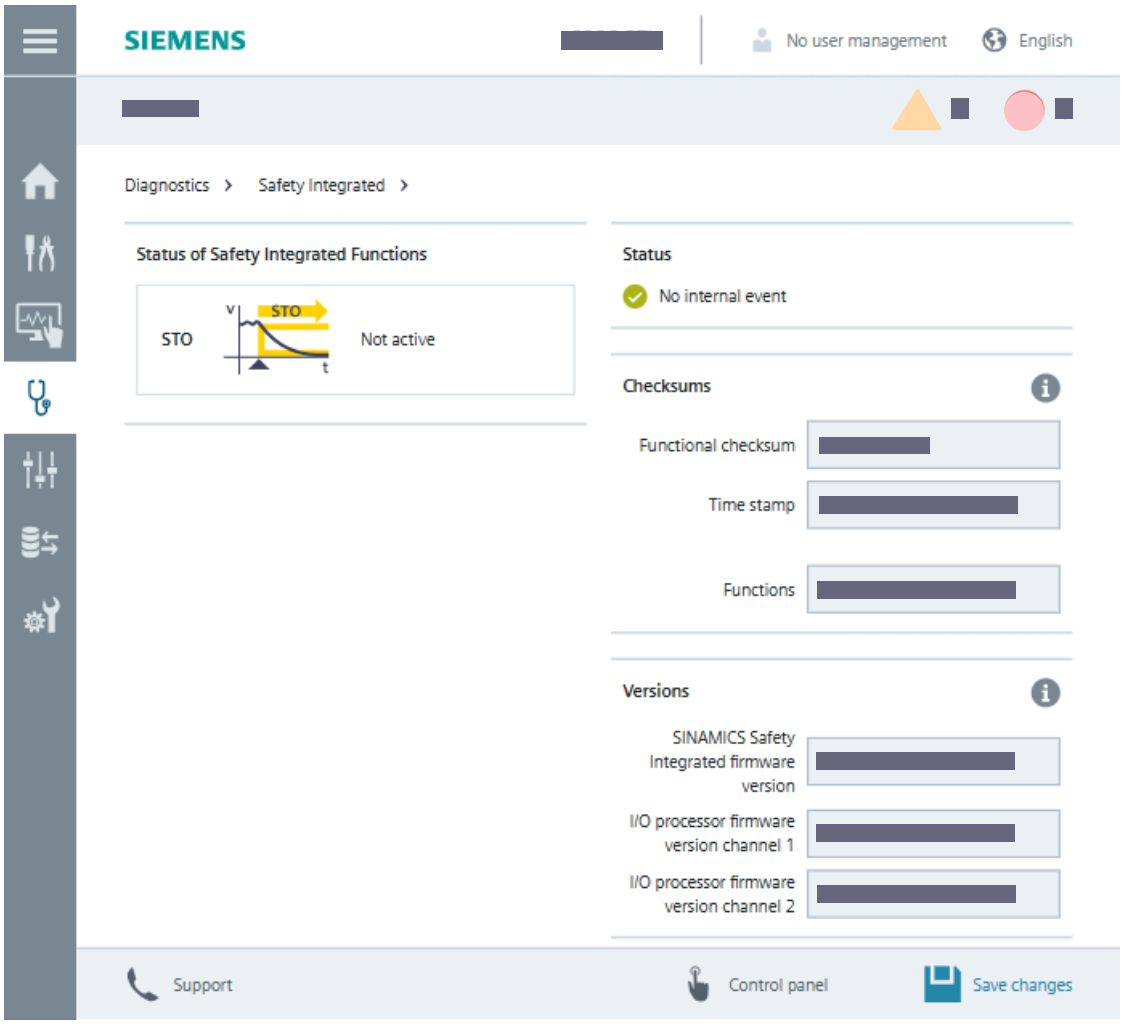

Figure 7-13 Monitoring Safety Integrated Functions

The following content is displayed:

- "Status of Safety Integrated Functions"
  Displays the status of the enabled Safety Integrated Functions
- "Status"
  Displays the internal events (e.g. system errors)
- "Checksums"
  - "Functional checksum"
    Displays the functional checksum of the converter to track changes (safety logbook)
  - "Functions"
    Displays the checksum over the checksum-checked parameters to configure the converter
  - "Time stamp"
    The time stamp indicates when the update was made.
- "Versions"
  Displays the safety-relevant software versions of the corresponding components

7.4.3.4 Connection overview

Overview

Function view "Connection overview" provides information about the connections in the drive system.

Description of function

The individual components with IP address and additional details are graphically displayed in the connection overview.

Figure 7-14 Connection overview

7.4.3.5 Communication

Overview

Function view "Communication" provides information about the activated fieldbus protocol.

Description of function

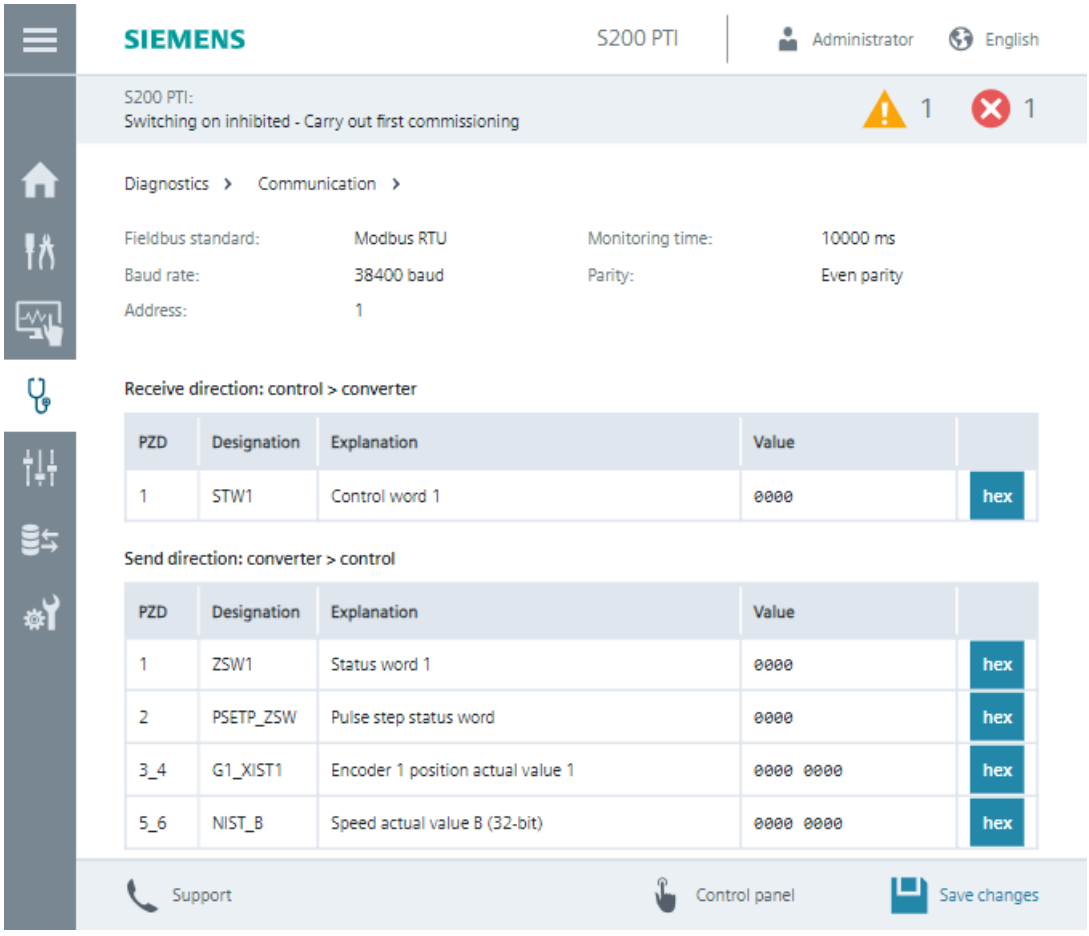

Figure 7-15 Communication

The following content is displayed:

- Fieldbus configuration
- Process data in the send and receive directions

The values are shown in the hexadecimal format. The display of individual values is switched between the binary, decimal, and hex format by clicking on the button to the right of the value.

7.4.3.6 Status word and control word

Overview

Function view "Control/status word" provides information about the current status of the sequence control system.

Description of function

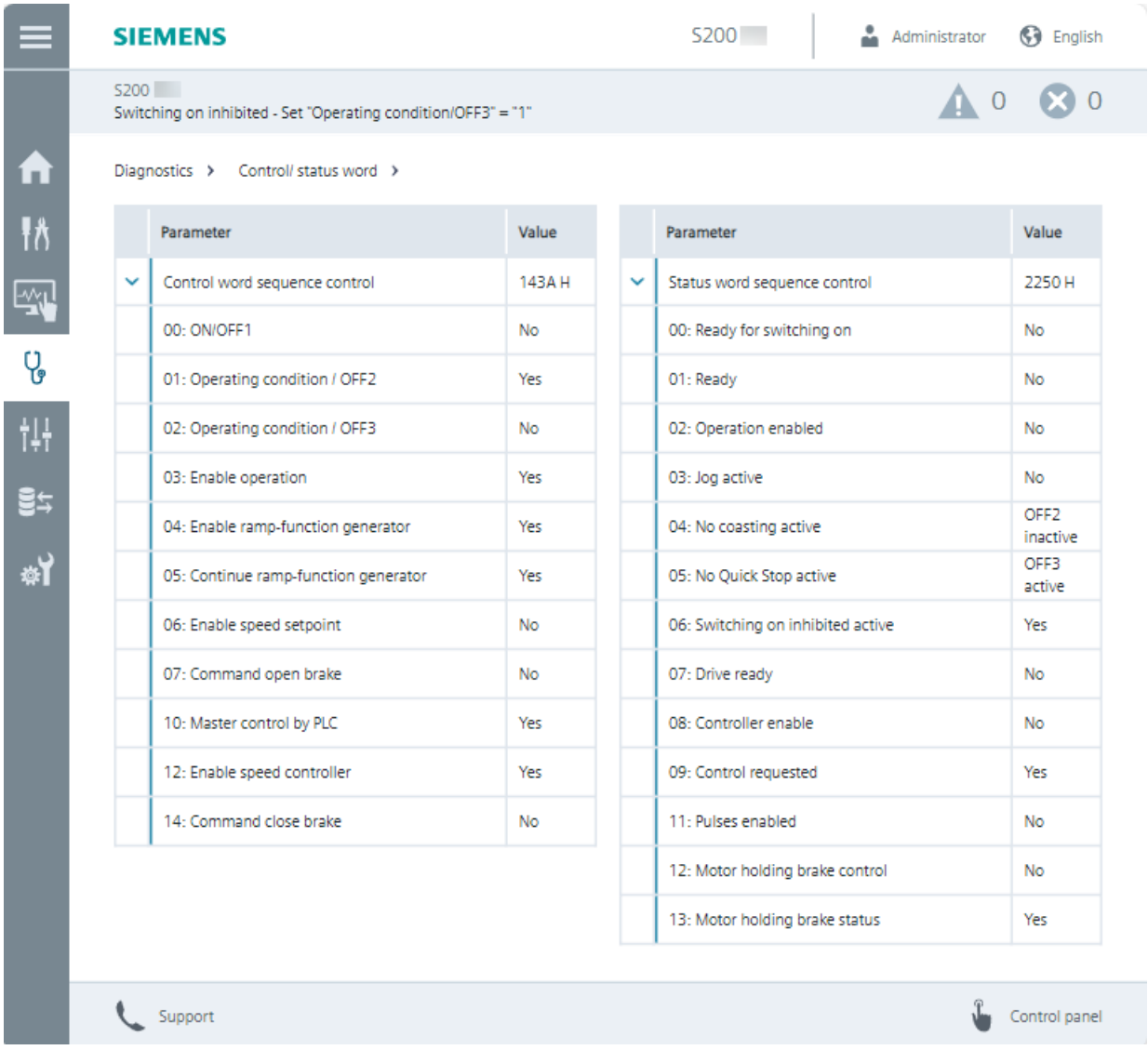

Parameter	Value
Control word sequence control	143A H
00: ON/OFF1	No
01: Operating condition / OFF2	Yes
02: Operating condition / OFF3	No
03: Enable operation	Yes
04: Enable ramp-function generator	Yes
05: Continue ramp-function generator	Yes
06: Enable speed setpoint	No
07: Command open brake	No
10: Master control by PLC	Yes
12: Enable speed controller	Yes
14: Command close brake	No

Parameter	Value
Status word sequence control	2250 H
00: Ready for switching on	No
01: Ready	No
02: Operation enabled	No
03: Jog active	No
04: No coasting active	OFF2 inactive
05: No Quick Stop active	OFF3 active
06: Switching on inhibited active	Yes
07: Drive ready	No
08: Controller enable	No
09: Control requested	Yes
11: Pulses enabled	No
12: Motor holding brake control	No
13: Motor holding brake status	Yes

Figure 7-16 Control and status word

Control and state word show all signals of the sequence control.

7.4.4 Parameters

7.4.4.1 Parameter lists

Overview

Function view "Parameter list" shows all the parameters of the converter. The parameter list allows specific parameters to be changed.

Description of function

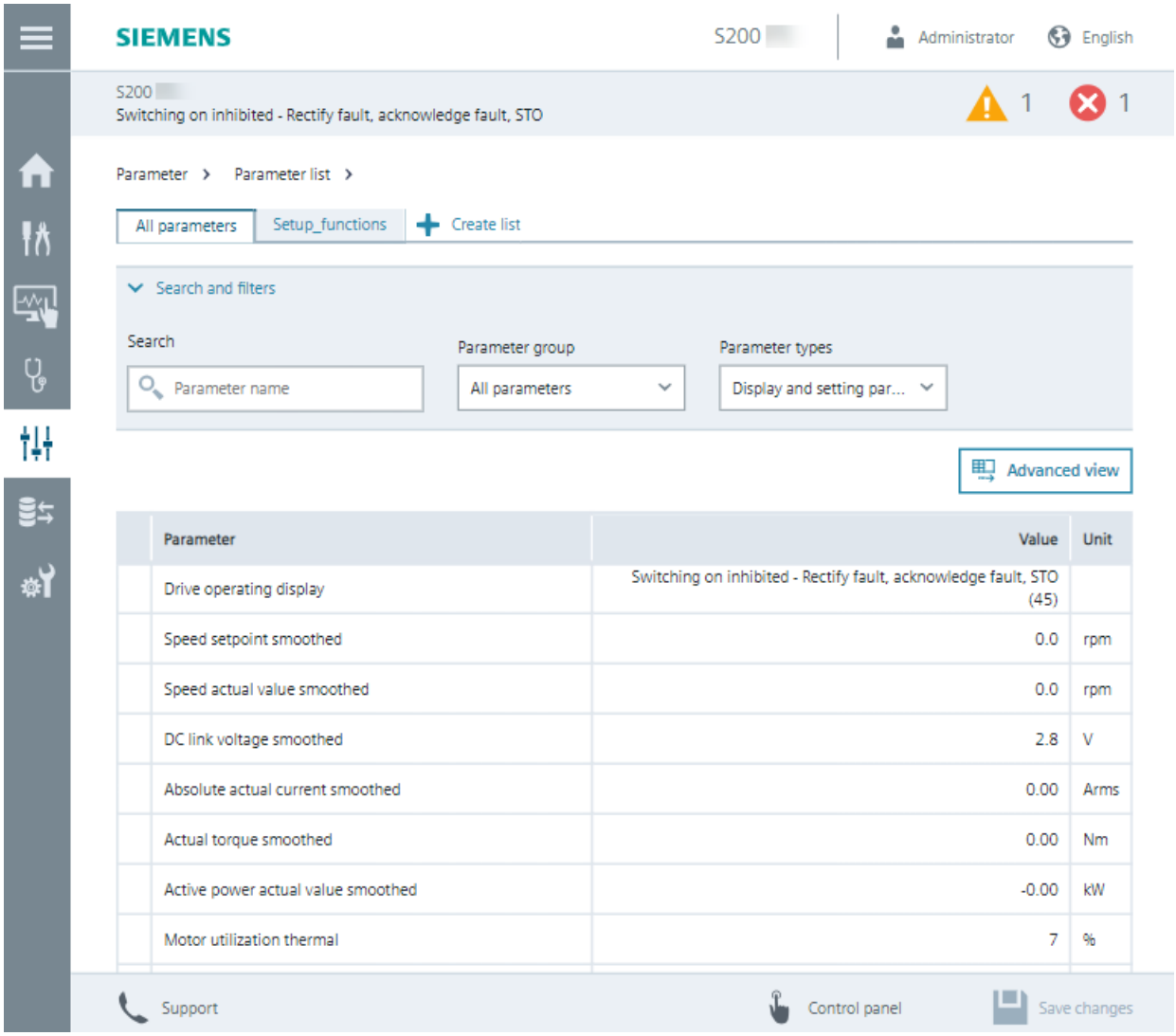

Figure 7-17 Parameter list

The function view shows the following tabs:

- Parameter list
  Depending on the setting in the "System" menu > Settings, the parameter list shows either all parameters or just the standard parameters.
- User-defined parameter list (optional)
  - The user-defined parameter list contains selected parameters and is created using the + Create list tab.
  - "Setup_functions" parameter list
    The "Setup_functions" parameter list is intended for parameters that are configurable only in the commissioning mode but not accessible via dialogs of the advanced setup menu. Suggestions are included in the factory setting.
    Starting the advanced setup automatically activates the commissioning mode. To enable users to configure these parameters during advanced setup, the parameter list is created and managed with the name "Setup_functions".
    Additional parameters can be added to the parameter list. This allows uniform access to the parameters of a drive function, for example.

  For more details, see Section "User-defined parameter list (Page 217)".

The parameter list offers the following options:

- Toggling between two list views
  - Show as "Simple view" and "Advanced view" with parameter numbers
- Managing user-defined parameter lists
  - Create a user-defined parameter lists
  - Copy the selected parameters to a designated user-defined parameter list
  - Import and export user-defined parameter lists
- Searching parameters
  - Search by parameter number or text search within parameter names
- Filtering the parameter list
  - Parameter groups: Only show the parameters that are assigned to a particular function.
  - Parameter types: display and/or setting parameters
- Changing parameter values directly in a parameter list
  - Exception: blocked parameters

p	Setting parameters	Can be read and edited.
		The setting parameter can only be parameterized in the active commissioning mode. Depending on the parameter, changes are possible in the quick setup or Safety Integrated commissioning.
		The setting parameter can only be parameterized when the user has the appropriate function rights.
r	Display parameters	Can only be read and cannot be edited.
c	Display parameters	Can only be read and cannot be edited.

7.4.4.2 User-defined parameter list

Overview

A user-defined parameter list is a combination of specific parameters from the standard parameter list of the converter. These can be used to configure frequently used user functions, for example.

Description of function

With the user-defined parameter lists, the web server provides the following functions:

- Creating up to 20 user-defined parameter lists
- Configuring list properties
  - Name
  - Position or sequence of the tabs
  - Comment
  - Delete list
- Exporting and importing user-defined parameter lists
  Export:
  - Export one or several user-defined parameter lists.
  - The web server exports the lists exclusively as a json file.
  - Export files generated by the web server can be imported into a Startdrive project.

  Import:
  - The list import function in the web server exclusively imports json files.
  - User-defined parameter lists exported via the web server or Startdrive as a json file can be imported into another drive of the same type via the web server.
    Requirement: same drive type and same firmware version

  If values are changed, the data must be saved retentively.

7.4.5 Backup and restore

Overview

With "Backup and restore" you can back up parameters and other settings and restore the settings again if necessary.

Description of function

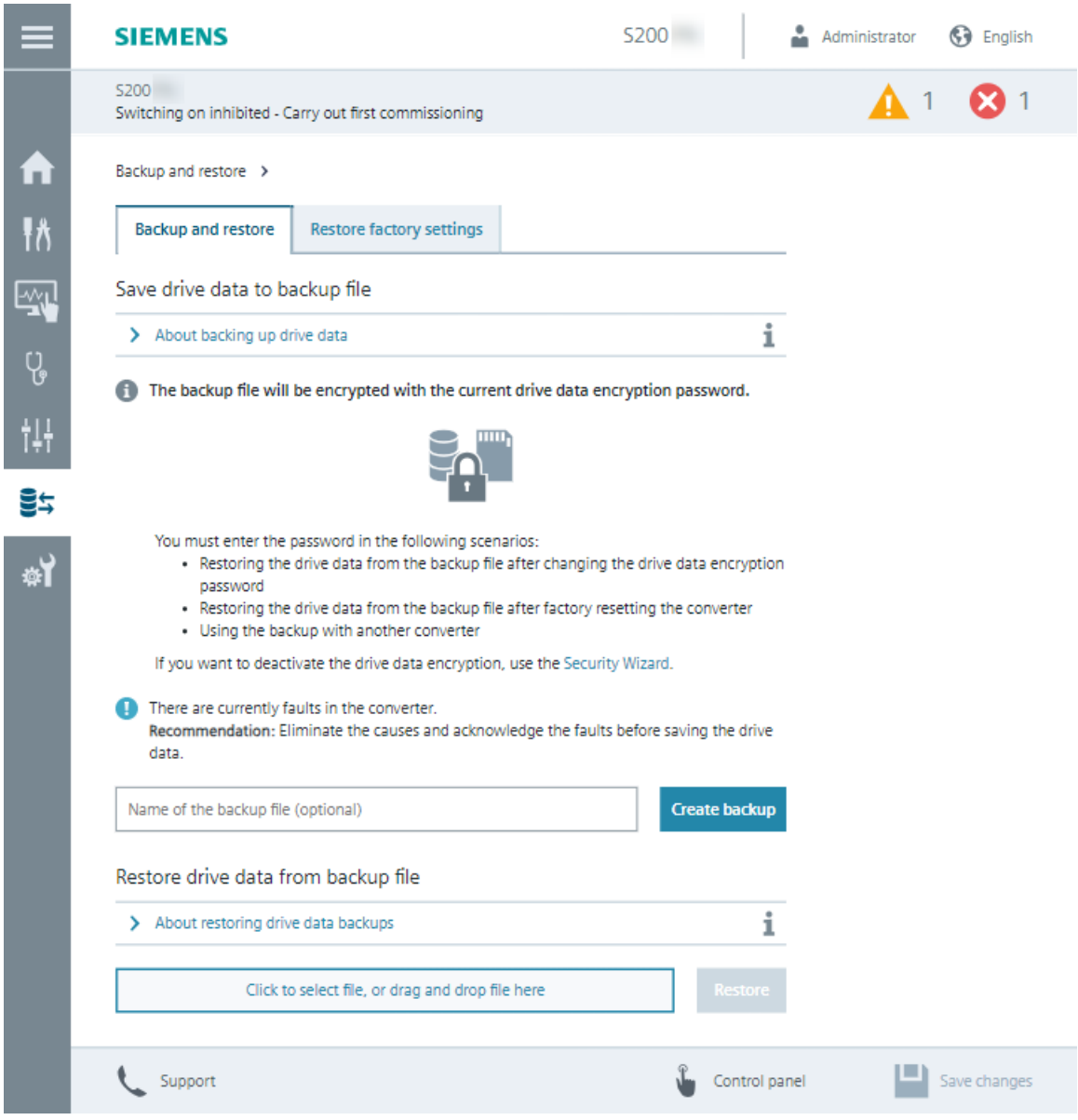

Figure 7-18 Backup and restore

Backup and restore

The following functions are available to back up data and settings:

- Save drive data to backup file
  Back up the settings to a file after commissioning.
  The drive data are encrypted in the backup file if function "Drive data encryption" is activated in the Security Wizard.
- Restore drive data from backup file
  When replacing a device or for series commissioning, load the backed-up parameter settings to the converter.
  To restore drive data from an encrypted backup file, the previously defined password for function "Drive data encryption" will be requested. For more details, see Section "Backup file with drive data encryption (Page 543)".

Restore factory settings

- Restore factory settings
  Almost all settings of the converter are reset to the factory values.
  Exception: The following settings are retained after you restore factory settings via the web server:
  - Settings of the communication interfaces
  - UMAC and security data

  To restore all settings, a memory card is required. For more details, see Section "Full reset of all device settings (Page 531)".
- Restore Safety Integrated to factory settings
  You only restore the settings of the Safety Integrated Functions to factory settings. All other settings remain unchanged.

7.4.6 System

7.4.6.1 Settings

Overview

The function view "Settings" offers basic settings for the web server and the converter.

Requirement

- To edit the web server settings, you need the "Edit web server configuration" right.
- To edit the drive settings, you need the "Edit device configuration or drive applications" right.

Description of function

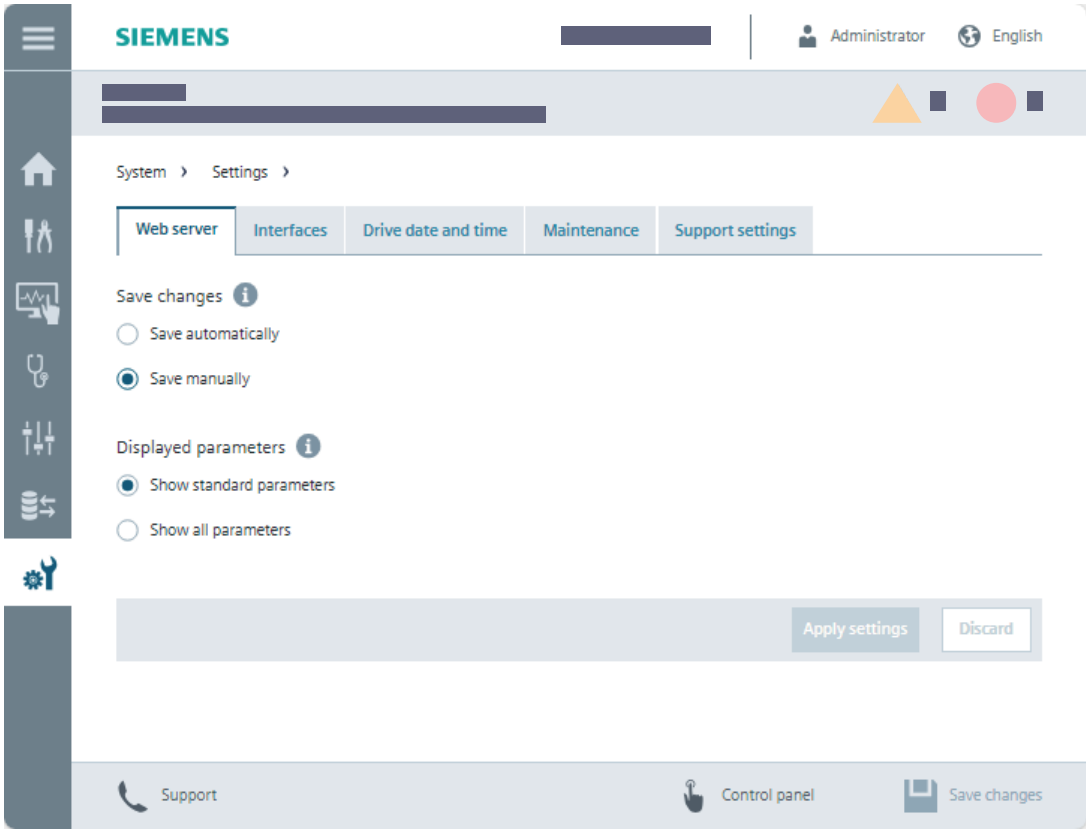

Figure 7-19 Web server system setting

Web server

Under "Web server", the web server offers options for saving changes and displaying parameters.

Interfaces

Under "Interfaces", the web server provides information about the status and the settings of the interfaces of the converter.

Drive date and time

Under "Drive date and time", the web server provides options for setting the date format and for obtaining the date, time and time zone of the converter.

Maintenance

The web server displays the wear of the converter fan. For converters that do not have a fan, a message is displayed specifying that no fan maintenance is required.

Support settings

Under "Support settings", the web server provides the option to store additional support and hotline data. The web server displays the data in the function view "Support".

7.4.6.2 User management

Overview

In "User management" you manage users and configure their roles and rights for accessing the converter.

Requirement

- You activated user management (UMAC) in Security Wizard at the step "Configure security settings (Page 183)" during first commissioning.
- You are logged into the web server and have the necessary rights to manage users.

Description of function

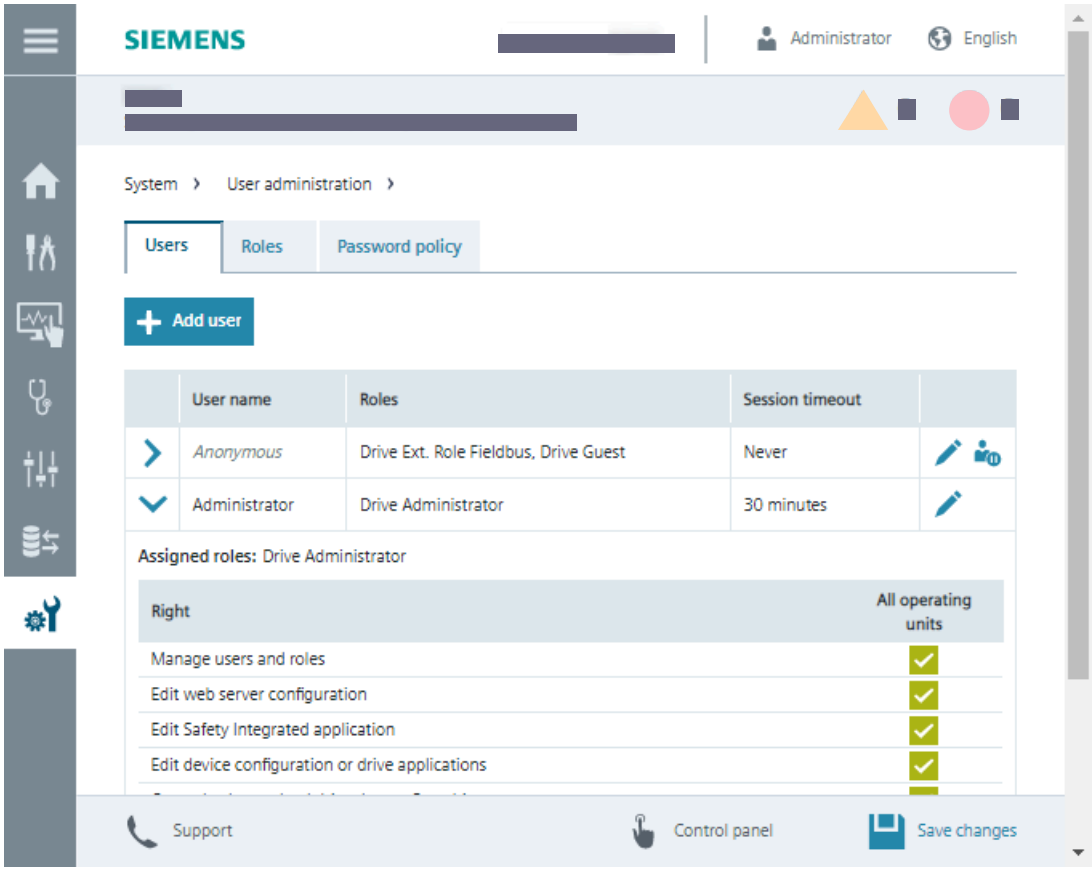

Figure 7-20 User management

Users

Under "Users", the web server provides a summary of the created users and offers the following functions:

- Create new user accounts
- Change existing user accounts
- Activate or deactivate user accounts

Roles are assigned to give users read or write access to certain functions.

Roles

Under "Roles", the web server provides a summary of the existing roles and the assigned rights.

Note

Extended role for access via fieldbus protocols

The "Drive Ext. Role Fieldbus" extended role is available for access via fieldbus protocols. If read and write access is required for fieldbus communication (cyclic communication excepted), the "Anonymous" user must be assigned the "Drive Ext. Role Fieldbus" role.

Password policy

Under "Password policy", you specify the requirements a password must meet. You define the password complexity and the time to password expiry (if any).

More information

More detailed information on user management and security settings is provided in Configuration Manual Industrial Cybersecurity (https://support.industry.siemens.com/cs/ww/en/view/109975311).

7.4.6.3 Protection & Security

Overview

In "Protection & Security", you configure basic security settings using the Security Wizard and the tables it contains.

Requirement

- You activated the security settings during first commissioning.
- You are logged into the web server and have the necessary rights to edit drive data.

Description of function

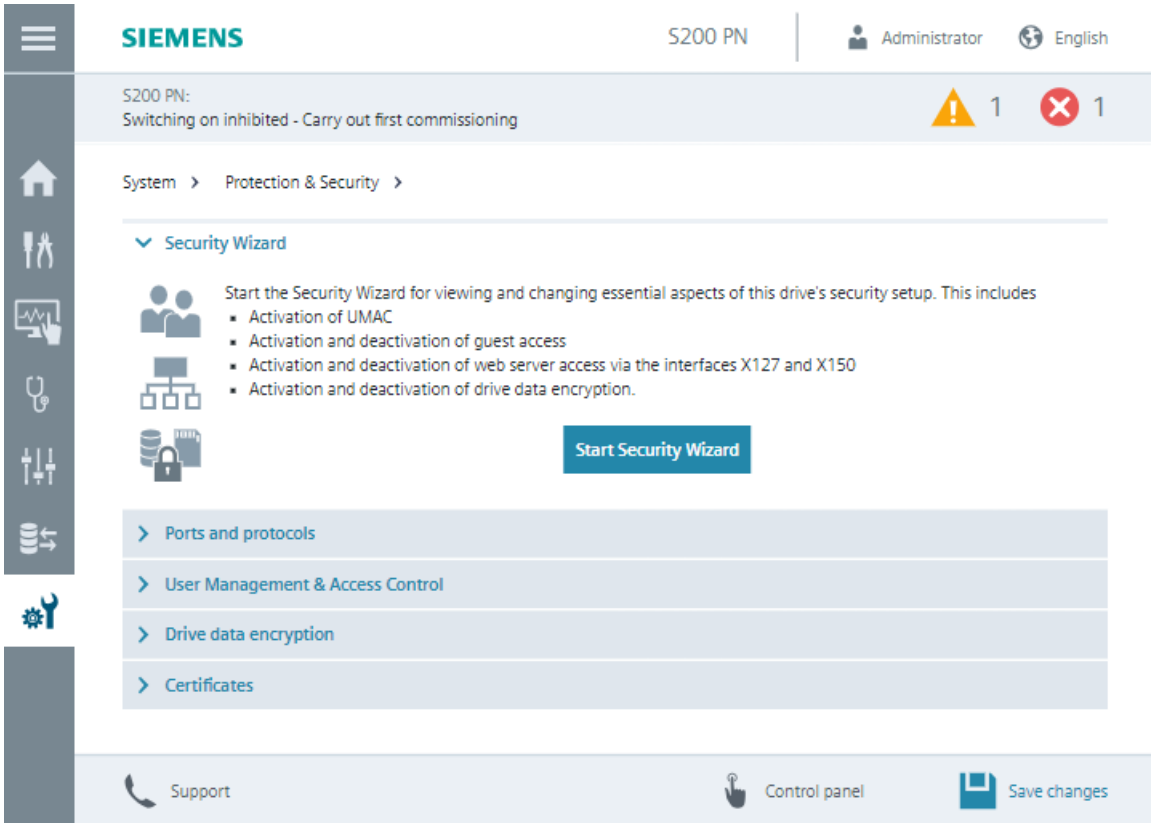

Figure 7-21 Protection & Security

Start Security Wizard

The Security Wizard guides you through the converter security settings, including User Management & Access Control, web server activation, and drive data encryption.

Ports and protocols

The web server provides an overview of the available ports and protocols and their status. This is where you activate or deactivate the communication interfaces.

User Management & Access Control

The web server provides an overview of the settings in user management.

Drive data encryption

The web server shows whether the converter encrypts sensitive drive data.

Certificates

The necessary certificate files are included in the firmware files of the converter. The web server provides an overview of the following certificates used:

- HTTPS certificate:
  Generated automatically when the web server is called for the first time.
  The HTTPS certificate is classified as not trusted when the web server is called for the first time. The browser establishes a non-secure HTTPS connection to the web server. The browser flags the non-secure connection with a security warning. The next time the web server is called, the HTTPS is classified as trusted if it is signed by the root certificate.
- Root certificate:
  Needed in order for the HTTPS certificate to be signed by a trusted root certification authority. If the root certificate has been imported into the certificate store of the operating unit, the HTTPS certificate will be signed when the web server is called. The browser then classifies the signed HTTPS certificate as valid and establishes a secure HTTPS connection to the web server.

Use "Download certificate to operating panel" to download a certificate to the operating unit. Please keep and install the downloaded certificates in the operating unit.

More information

More detailed information on configuring secure communication is provided in Configuration Manual Industrial Cybersecurity (https://support.industry.siemens.com/cs/ww/en/view/109975311).

7.4.6.4 Licenses

Overview

You must purchase licenses for supplementary functions and options.

Use the function view "Licenses" to manage the licenses for drive functions and options.

Requirement

- You are logged into the web server and have the necessary rights to edit drive data.
- The operating unit is connected online with the drive.

Description of function

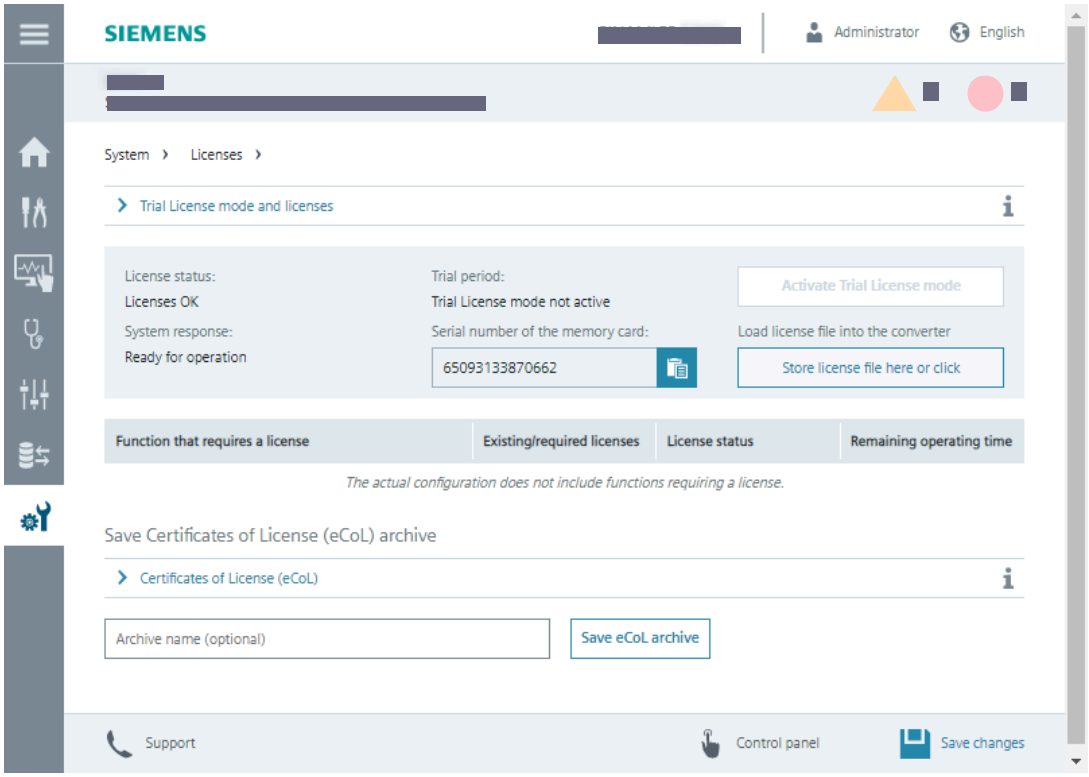

Figure 7-22 Licenses

The function view "Licenses" offers the following functions:

- Display the installed functions requiring licenses
- Read and copy the serial number of the Siemens memory card inserted into the converter
- Load and activate purchased licenses

Load and activate licenses

Under "Trial License mode and licenses", you upload license files created with the Web License Manager.

In Trial License mode, you can try out functions for a specified period.

Using functions/options requiring a license

The web server provides an overview of the options that require licensing and their license status.

Save Certificates of License (eCoL) archive

Under "Save Certificates of License (eCoL) archive", you transfer the eCoL from a memory card to the file system of the operating unit.

7.4.6.5 Firmware update

Overview

You can perform a firmware update in the web server:

- For an upgrade, the converter and web server settings are retained.
- For a downgrade, the converter and web server are reset to factory settings. All user-defined settings are reset to the factory settings, including:
  - Parameterization of the converter
  - Activation and settings of User Management & Access Control
  - "IP configuration" and "Device name" of the communication interface
  - Self-generated certificates
  - User-defined parameter lists in the web server

Requirement

You have saved the ZIP file with the firmware to a drive, which you can access using the operating unit.

Description of function

This function view "Firmware update" displays the current version of the firmware and of the web server.

To copy a different firmware version to the converter, load the ZIP file containing the firmware from the file system of the operating unit.

7.4.6.6 About web server

Overview

"About web server" contains information about the web server and links to additional information.

Description of function

Under "Versions" you can see the revision levels of the web server and the loaded firmware.

Under "Third-party software" there is a link to information about any third-party software used. The license conditions are loaded to the operating unit in the file "READ_OSS.ZIP". You can display the HTML file included in the ZIP file using your browser.

There are more links to information about:

- Cookie policies
- Industrial Cybersecurity
- Privacy policy

7.4.7 Support

Overview

The action bar of the web server contains a support dialog.

Description of function

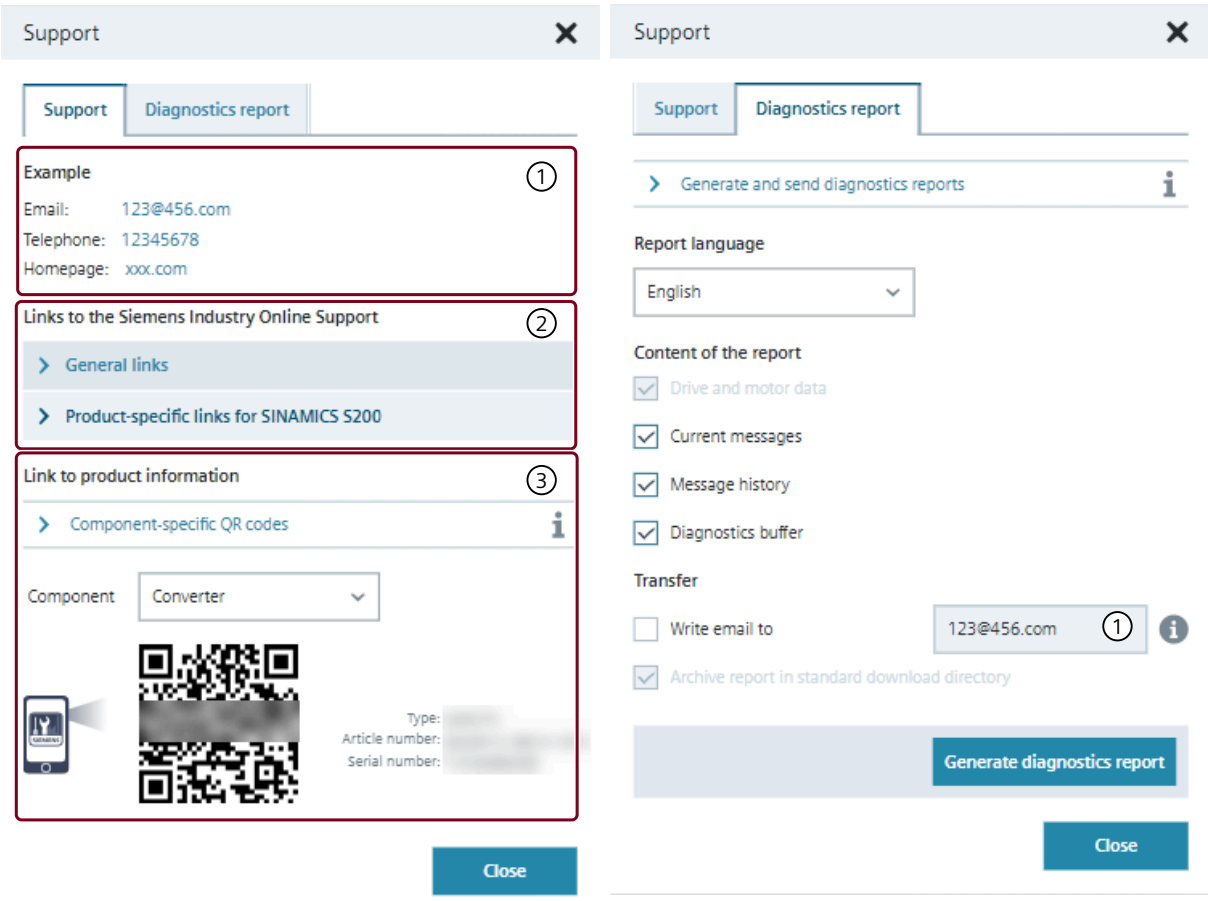

① Additional support and hotline data configured in "Settings (Page 219)"
② Links to product support websites
③ QR codes of online support pages for individual components

Figure 7-23 Support information

Support

Under "Support", you can access links to additional information for the converter.

Diagnostics report

By default, the storage location is the download folder of your operating unit.

The diagnostics report helps technical support by providing basic information on the current state of the converter, for example, in the event of a fault.

The diagnostics report always contains the drive, motor, and encoder data and optionally an overview with errors and messages that have occurred. The time stamps at the top of the report correspond to the local time at the operating unit with technical support and the local time at the converter.

The diagnostics report is provided for downloading and sending as a ZIP file in the Downloads folder of the operating unit used.

If you select the "Write email to" check box, an email with standard text is additionally generated. The email must be updated with the relevant letter text and the diagnostics report as an attachment and sent to the recipient. This function is only available on operating units that support an email application. An Internet connection is required to send emails.

The following figure shows a printout of a diagnostics report:

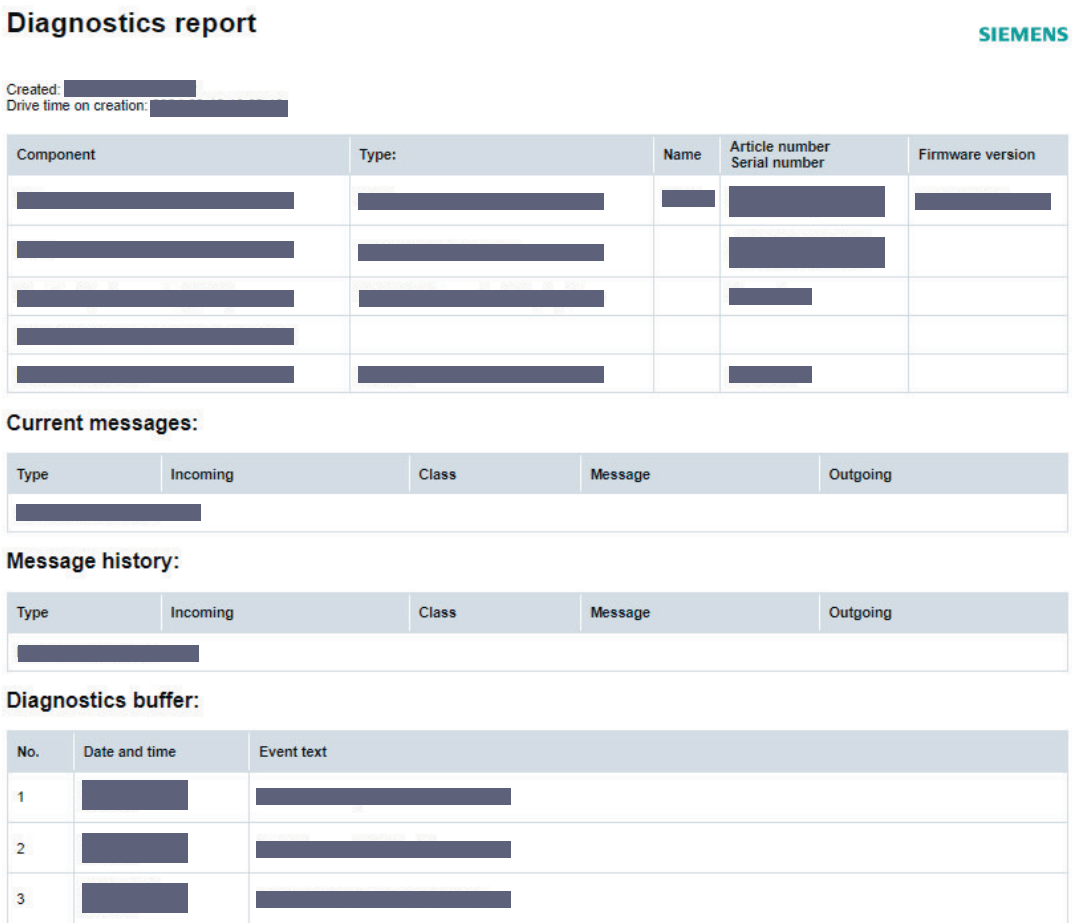

Figure 7-24 Diagnostics report printout

7.4.8 Control panel

Overview

The control panel moves the motor using the operating unit, bypassing the higher-level controller, for example to test the converter settings after commissioning.

Requirement

⚠ WARNING

Unexpected motor movement through incorrect operation

If the control panel is active, the safety shutdowns of the higher-level controller have no effect. The "Stop with space bar" function is not guaranteed in all operating states. Incorrect operation by untrained personnel may result in unexpected motor movement which can cause death or serious injuries.

- Only use the control panel for commissioning, diagnostics and service purposes.
- Only use the control panel if you are trained and authorized accordingly.
- Install an EMERGENCY STOP for the drive which is independent of the higher-level controller.

Description of function

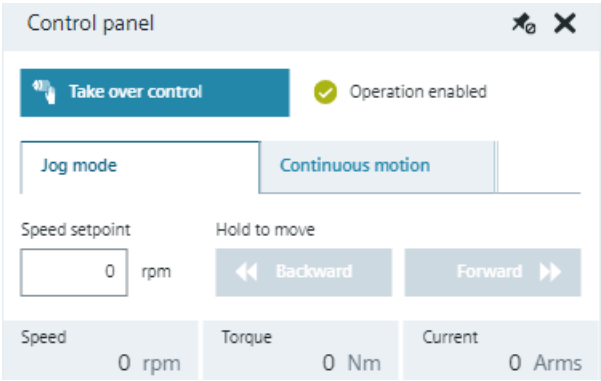

Figure 7-25 Control panel

The "Take over control" dialog deactivates the signals of the higher-level controller and switches the source for enables and the setpoint value to the control panel.

Note

Drive responds immediately

Although all enable signals are removed before returning the master control, the setpoints and commands still come from the original parameterized sources after the master control is returned.

The control panel offers the following operating modes to move the motor:

- Jog mode moves the motor while the direction buttons are pressed.
- Continuous operation starts the motor when a direction button is pressed.

Series commissioning

8

8.1 Series commissioning

Overview

For series commissioning, transfer the data and settings of converter 1 to converter 2 or other converters.

Requirement

Converter 2 must comply with the following requirements:

- The rated power of converter 2 corresponds to the rated power of converter 1.
- The firmware version of converter 2 is higher than or equal to the firmware version of converter 1.
- The machines that are commissioned via series commissioning are identical in terms of the application, converter and motor.
- Converter 2 has the factory setting.

Description of function

There are two options when carrying out series commissioning of the converter:

- Series commissioning with memory card
- Series commissioning using commissioning tools

8.2 Series commissioning with memory card

Overview

"Series commissioning using a memory card" transfers the settings of converter 1 using a memory card to converter 2 or to additional converters.

Procedure

Proceed as follows to perform series commissioning using a memory card:

1. Switch off all power supplies to converter 1.
2. Insert an empty memory card with a maximum capacity of 32 GB (e.g.: 6SL5970-0AA00-0AA0) into the card slot of converter 1.
3. Switch on all power supplies to converter 1.
4. Commission the converter.
5. Save the settings retentively at the end of commissioning.
   This means that you save the settings retentively not only in converter 1 but also to the memory card.
6. Switch off all power supplies to converter 1.
7. Remove the memory card from converter 1.
8. Switch off all power supplies to converter 2.
9. Insert the memory card into converter 2.
10. Switch on all power supplies to converter 2 and wait until the RDY LED lights green.
    Converter 2 takes the settings of converter 1 from the memory card, including the following settings:
    - User management
    - Access control
    - IP configuration
    - Device name
11. Switch off all power supplies to converter 2.
12. Remove the memory card from converter 2.

Repeat steps 8 to 12 for all additional converters to which you wish to transfer these settings.

8.3 Series commissioning using a commissioning tool

Overview

For the series commissioning using a commissioning tool, transfer the settings of converter 1 using the commissioning tool to converter 2 or to additional converters.

Procedure

Proceed as follows to perform series commissioning using a commissioning tool:

1. Switch on the supply voltage of converter 1.
2. Commission the converter using your operating unit, e.g. a PC.
3. Save the settings retentively at the end of commissioning.
4. Save the drive data to a backup file.
5. Switch on the supply voltage of converter 2.
6. Restore the drive data from the backup file.
   Converter 2 takes the settings from the backup file.
   After a restart, the security settings configured in converter 1, e.g. drive password, UMAC data, become active in converter 2.

Repeat steps 5 and 6 for all additional converters to which you wish to transfer the settings of converter 1.

Functions

9

9.1 Overview of the functions

Description

The converter firmware functions adapt motor operation to the requirements of the specific application.

Table 9-1 Converter firmware functions

Firmware function	Description
Fieldbus communications	Communications with higher-level controller
Inputs/outputs	Interconnection of converter signals with drive functions
Drive functions	Basic functions for motor operation
Drive control	Fast position control with pulse train input (Fast PTI) Speed control (S) (for S200 PTI only) Torque control (T) (for S200 PTI only) Compound controls (for S200 PTI only)
Safety Intergrated (for S200 PTI only)	Stop functions for applications with high reliability demands

9.2 Compound controls

Overview

For a compound control mode, you can switch between two basic control modes by setting the parameter p29003 and configuring the level sensitive signal C-MODE on DI9.

Description of function

The following compound control modes are availabe.

p29003	C-MODE	
	0 (the first control mode)	**1 (the second control mode)**
5	Fast PTI	S
6	Fast PTI	T
7	S	T

Note

If you switch between the two compound control modes by configuring the DI signal C-MODE, some default signals assigned to the digital inputs will be changed accordingly.

Note

Switching conditions

You can perform control mode switching only after the motor speed is lower than 30 r/min.

For the switching from Fast PTI to S or T, you are recommended to perform control mode switching after the INP (in-position) signal is at high level.

9.3 Inputs/outputs

9.3.1 Digital inputs

Overview

A digital input detects a signal coming from outside. The function of a digital input is adjustable.

Description of function

The S200 PTI converter has ten digital inputs, from DI0 to DI9. The S200 Basic PTI converter has six digital inputs, from DI2 to DI7. A parameter r0722.x is assigned to each digital input. You can adjust the function of digital inputs by interconnecting the signal parameters to r0722.x in commissioning tools.

The following signals are assignable to the digital inputs.

Table 9-2 Assignable signals

Parameter	Signal	Type	Description	Available control mode		
				Fast PTI	S	T
c29300	Servo-on (SON)[1]	Edge[2] 0→1 1→0	• 0→1: power on the power circuit and prepare the converter for operation. • 1→0: the motor ramps down (OFF1) in Fast PTI and S modes; the motor coasts down (OFF2) in T mode.	✓	✓	✓
p2104	Acknowledge all faults (RESET)	Edge 0→1	0→1: reset alarms	✓	✓	✓
c29301	Clockwise over-travel limit (CWL)	Edge 1→0	• 1: condition for operation • 1→0: quick stop (OFF3)	✓	✓	✓
c29302	Counterclockwise over-travel limit (CCWL)	Edge 1→0	• 1: condition for operation • 1→0: quick stop (OFF3)	✓	✓	✓
c29149	Gain switching or PI/P switching (G-CHANGE)	Level	• 0: scaling factor 1 or PI control is selected. • 1: scaling factor 2 or P control is selected.	✓	✓	-
c29265	Inhibit pulse train setpoint (P-TRG)	Level Edge 0→1	• 0: operation with pulse train setpoint is possible • 1: inhibit the pulse train setpoint	✓	-	-
c29267	Clear droop pulses (CLR)	Level	• 0: not clear • 1: clear the droop pulses based on the selected clear mode (p29242)	✓	-	-

Parameter	Signal	Type	Description	Available control mode		
				Fast PTI	S	T
c29275	Electronic gear selection bit 0 (EGEAR0)	Level	EGEAR1 : EGEAR0 • 0 : 0: electronic gear ratios 1 • 0 : 1: electronic gear ratios 2 • 1 : 0: electronic gear ratios 3 • 1 : 1: electronic gear ratios 4	✓	-	-
c29276	Electronic gear selection bit 1 (EGEAR1)	Level		✓	-	-
c29048	Torque limit selection bit 0 (TLIM0)	Level	TLIM1 : TLIM0 • 0 : 0: internal torque limit 0 • 0 : 1: internal torque limit 1 (analog input 1) • 1 : 0: internal torque limit 2 • 1 : 1: internal torque limit 3	✓	✓	-
c29049	Torque limit selection bit 1 (TLIM1)	Level				
c29063	Speed limit selection bit 0 (SLIM0)	Level	SLIM1 : SLIM0 • 0 : 0: internal speed limit 0 • 0 : 1: internal speed limit 1 (analog input 0) • 1 : 0: internal speed limit 2 • 1 : 1: internal speed limit 3	✓	✓	✓
c29064	Speed limit selection bit 1 (SLIM1)	Level				
c29303	Clockwise rotations (CWE)[1]	Level	• 1: enable clockwise rotation, ramp up • 0: disable clockwise rotation, ramp down	-	✓	✓
c29304	Counterclockwise rotations (CCWE)[1]	Level	• 1: enable counter-clockwise rotation, ramp down • 0: disable counter-clockwise rotation, ramp up	-	✓	✓
c29074	Zero speed clamps (ZSCLAMP)	Level	• 1: when the motor speed setpoint is an analog signal and lower than the threshold level (p29075), the motor is clamped. • 0: no action	-	✓	-
p1020	Fixed speed setpoint selection bit 0 (SPD0)[1]	Level	SPD2 : SPD1 : SPD0 • 0 : 0 : 0: analog speed setpoint • 0 : 0 : 1: fixed speed setpoint 1 • 0 : 1 : 0: fixed speed setpoint 2 • 0 : 1 : 1: fixed speed setpoint 3 • 1 : 0 : 0: fixed speed setpoint 4 • 1 : 0 : 1: fixed speed setpoint 5 • 1 : 1 : 0: fixed speed setpoint 6 • 1 : 1 : 1: fixed speed setpoint 7	-	✓	-
p1021	Fixed speed setpoint selection bit 1 (SPD1)[1]	Level				
p1022	Fixed speed setpoint selection bit 2 (SPD2)[1]	Level				
c29047	Torque setpoint source (TSET)	Level	• 0: analog torque setpoint • 1: fixed torque setpoint	-	-	✓
r849	No quick stop OFF3 (EMGS)	Level	• 0: OFF3 • 1: no OFF3	✓	✓	✓
c29305	Control mode switch (C-MODE)	Level	• 0: the first control mode • 1: the second control mode	✓	✓	✓

[1] The DI signals are invalid when the Modbus communication is enabled for the transmission of control word and setpoint signals (p29008 = 1).

[2] The servo-on state is edge triggered by default. You can change the setting via p29006.

The following signals are assigned to the digital inputs by default.

Table 9-3 Default signals of digital inputs for S200 PTI

Digital input	Parameter	Default signal		
		Fast PTI	S	T
DI0	r0722.0	CWL	CWL	CWL
DI1	r0722.1	CCWL	CCWL	CCWL
DI2	r0722.2	SON	SON	SON
DI3	r0722.3	RESET	RESET	RESET
DI4	r0722.4	-	Fixed speed setpoint selection bit 0	-
DI5	r0722.5	P-TRG	ZSCLAMP	TSET
DI6	r0722.6	EMGS	EMGS	EMGS
DI7	r0722.7	EGEAR0	CCWE	CCWE
DI8	r0722.8	CLR	CWE	CWE
DI9	r0722.9	C-MODE	C-MODE	C-MODE

Table 9-4 Default signals of digital inputs for S200 Basic PTI

Digital input	Parameter	Default signal
DI2	r0722.2	SON
DI3	r0722.3	RESET
DI4	r0722.4	-
DI5	r0722.5	P-TRG
DI6	r0722.6	EMGS
DI7	r0722.7	EGEAR0

More information

For more information about wiring digital inputs, see Section "Connecting the inputs and outputs (Page 159)".

Parameters

The following list includes the parameters of the "Digital inputs" function.

Number	Name	Unit
r0722.2...7	Digital inputs status	
r0722.0...9	Digital inputs status	
c0849[0]	No Quick Stop / Quick Stop (OFF3)	
c1020[0]	Fixed speed setpoint selection bit 0	

c1021[0]	Fixed speed setpoint selection bit 1
c1022[0]	Fixed speed setpoint selection bit 2
c2104[0]	2nd acknowledge faults
c2510[0...3]	LR selecting measuring probe evaluation
c2511[0...3]	LR measuring probe evaluation edge
c2568	EPOS hardware limit switch activation
c2569	EPOS negative hardware limit switch
c2570	EPOS positive hardware limit switch
c2589	EPOS jog 1
c2590	EPOS jog 2
c2591	EPOS jogging incremental
c2595	EPOS homing start
c2596	EPOS set home position
c2597	EPOS homing type selection
c2612[0...1]	EPOS active homing reference cam
c2613	EPOS active homing negative reversing cam
c2614	EPOS active homing positive reversing cam
c2625	EPOS traversing block selection bit 0
c2626	EPOS traversing block selection bit 1
c2627	EPOS traversing block selection bit 2
c2628	EPOS traversing block selection bit 3
c2629	EPOS traversing block selection bit 4
c2631	EPOS activate traversing task (0 -> 1)
c2633	EPOS external block change (0 -> 1)
c2640	EPOS intermediate stop (0 signal)
c2641	EPOS reject traversing task (0 signal)
c29047	Torque setpoint source
c29048	Torque limit selection bit 0
c29049	Torque limit selection bit 1
c29063	Speed limit selection bit 0
c29064	Speed limit selection bit 1
c29074	Zero speed clamp active
c29149	Gain switching or PI/P switching
c29265	Pulse train setpoint inhibited
c29267	Clear droop pulses
c29275	Electronic gear selection bit 0
c29276	Electronic gear selection bit 1
c29300	Servo-on
c29301	Clockwise over-travel limit
c29302	Counterclockwise over-travel limit
c29303	Clockwise rotation
c29304	Counterclockwise rotation
c29305	Control mode switching

9.3.2 Digital outputs

Overview

A digital output reports signal states of the converter to the outside. The function of a digital output is adjustable.

Description of function

The S200 PTI converter has six digital outputs, from DO0 to DO5. The S200 Basic PTI converter has four digital outputs, from DO2 to DO5.

A parameter c073x is assigned to each digital output. You can adjust the function of digital outputs by interconnecting the signal parameters to c073x in commissioning tools.

The following signals are assignable to the digital outputs.

Table 9-5 Assignable signals

Parameter	Signal	Available control mode		
		Fast PTI	S	T
r899.2	Operation enabled (RDY) • 1: the converter is ready. • 0: the converter is not ready (a fault occurs or the enable signal is missing).	✓	✓	✓
r29404.0	Ready for servo-on (RDY_ON) • 1: the converter is ready for servo-on. • 0: the converter is not ready for servo-on.	✓	✓	✓
r2139.3	Fault present (FAULT) • 1: in the fault state. • 0: no fault.	✓	✓	✓
r29289.10	In-position (INP) • 1: the number of droop pulses is in the preset in-position range (parameter p29291). • 0: the number of droop pulses is beyond the preset in-position range.	✓	-	-
r2199.0	|n_act| < p2161: zero speed detection (ZSP) • 1: motor speed ≤ zero speed (can be set with p2161). • 0: motor speed > zero speed + hysteresis (10 r/min).	✓	✓	✓
r1407.7	Torque limit reached (TLR) • 1: the generated torque has nearly (internal hysteresis) reached the value of the positive torque limit or negative torque limit. • 0: the generated torque has not reached any torque limit.	✓	✓	✓
r899.12	Motor holding brake control • 1: deactivate the motor holding brake. The motor can rotate. • 0: activate the motor holding brake. The motor cannot rotate.	✓	✓	✓

Parameter	Signal	Available control mode		
		Fast PTI	S	T
r899.13	Motor holding brake status • 1: the motor holding brake is active. The motor cannot rotate. • 0: the motor holding brake is released. The motor can rotate.	✓	✓	✓
r29404.2	Overload level reached (OLL) • 1: the motor has reached the parameterizable output overload level (p29080 in % of the rated torque). • 0: the motor has not reached the overload level.	✓	✓	✓
r29404.4	Warning 1 condition satisfied (WARNING 1) • 1: the parameterizable warning 1 condition has been satisfied. • 0: the parameterizable warning 1 condition has not been satisfied.	✓	✓	✓
r29404.5	Warning 2 condition satisfied (WARNING 2) • 1: the parameterizable warning 2 condition has been satisfied. • 0: the parameterizable warning 2 condition has not been satisfied.	✓	✓	✓
r29404.3	Speed reached (SPDR) • 1: the actual motor speed has nearly (internal hysteresis 10 rpm) reached the speed of the internal speed command or analog speed command. The speed approaching range can be set via parameter p29078. • 0: the speed difference between the speed setpoint and the actual speed is larger than the internal hysteresis.	-	✓	-
r29404.1	Current control mode (CM_STA) • 1: the second mode in compound control modes. • 0: the first mode in compound control modes or the five basic mode.	-	✓	✓
r46.8	Safety enable missing (STO_EP) • 1: the enable signal is missing, indicating that STO is active. • 0: the enable signal is available, indicating that STO is inactive. Note: STO_EP is a status signal for STO terminals, not a safe DO for the Safety Integrated function.	✓	✓	✓

The following signals are assigned to the digital outputs by default.

Table 9-6 Default signals of digital outputs

Digital output	Parameter	Default signal	
		S200 PTI	S200 Basic PTI
DO0	c0730	TLR	-
DO1	c0731	SPDR	-
DO2	c0732	RDY	RDY
DO3	c0733	FAULT	FAULT
DO4	c0734	INP	INP
DO5	c0735	-	-

More information

For more information about wiring digital outputs, see Section "Connecting the inputs and outputs (Page 159)".

Parameters

The following list includes the parameters of the "Digital outputs" function.

Number	Name	Unit
r0046.0...30	Missing enable signals	
c0730	Signal for terminal DO 0	
c0731	Signal for terminal DO 1	
c0732	Signal for terminal DO 2	
c0733	CU signal for terminal DO 3	
c0734	CU signal for terminal DO 4	
c0735	CU signal for terminal DO 5	
p0748.2...5	Invert digital outputs	
p0748.0...5	Invert digital outputs	
r0899.0...13	Status word sequence control	
r1407.0...28	Status word speed controller	
r2139.0...15	Status word faults/alarms 1	
r2199.0...11	Status word monitoring 3	
r2683.0...14	EPOS status word 1	
r2684.0...15	EPOS status word 2	
r29289.0...15	Pulse setpoint status word	
r29404.0...5	DO status word	

9.3.3 Analog inputs

Overview

An analog input can evaluate a voltage signal. Based on an adjustable characteristic, the S200 PTI converter converts the voltage signal into an internal percentage value. A signal interconnection defines the function of the analog input.

Description of function

The S200 PTI converter has two analog inputs, AI0 and AI1. AI0 is used for speed signals such as speed limit and speed setpoint. AI1 is used for torque signals such as torque limit and torque setpoint. You can adjust the function of the analog inputs in commissioning tools.

The following signals are assigned to the analog inputs by default.

Table 9-7 Default signals of analog inputs

Analog input	Default signal		
	Fast PTI	S	T
AI0	Speed limit	Speed setpoint	Speed limit
AI1	Torque limit	Torque limit	Torque setpoint

S200 PTI converts the voltage that the analog input reads in to a percentage value using a scaling characteristic.

The linear scaling characteristic is defined by two points (p0757, p0758) and (p0759, p0760). Parameters p0757 ... p0760 are assigned to an analog input by their index, e.g. parameters p0757[0] ... p0760[0] belong to analog input 0.

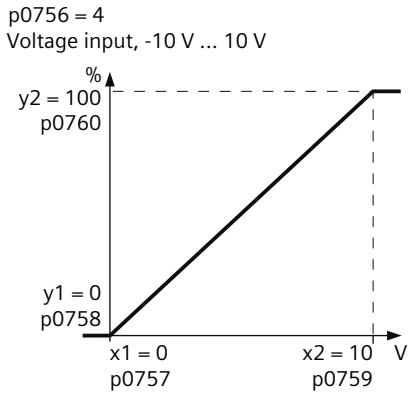

More information

For more information about wiring analog inputs, see Section "Connecting the inputs and outputs (Page 159)".

Parameters

The following list includes the parameters of the "Analog inputs" function.

Number	Name	Unit
r0755[0...1]	Analog inputs, actual value in percent	[%]
p0756[0...1]	Analog inputs type	
p0757[0...1]	Analog inputs characteristic value x1	
p0758[0...1]	Analog inputs characteristic value y1	[%]
p0759[0...1]	Analog inputs characteristic value x2	
p0760[0...1]	Analog inputs characteristic value y2	[%]
p0768[0...1]	Analog inputs noise suppression window	[%]

9.3.4 Analog outputs

Overview

An analog output can output a voltage signal. Based on an adjustable characteristic, the S200 PTI converter converts an internal percentage value into a voltage signal. A signal interconnection defines the function of the analog output.

Description of function

The S200 PTI converter has two analog outputs, AO0 and AO1. The parameter c0771[x] is assigned to the two analog outputs. You can adjust the function of the analog outputs in commissioning tools.

The following signals are assignable to the analog outputs.

Parameter	Signal	Available control mode		
		Fast PTI	S	T
r0063	Actual speed smoothed	✓	✓	✓
r0080	Torque actual value	✓	✓	✓
r0062	Speed setpoint after the filter	✓	✓	✓
r0079	Torque setpoint	✓	✓	✓
r0070	Actual DC link voltage	✓	✓	✓
r29350	Pulse input frequency	✓	-	-
r29351	Remaining number of pulses	✓	-	-

The following signals are assigned to the analog outputs by default.

Table 9-8 Default signals of analog outputs

Analog output	Parameter	Default signal
AO0	c0771[0]	Actual speed smoothed
AO1	c0771[1]	Torque actual value

S200 PTI uses a scaling characteristic to convert the value range -100% ... 100% of the internal signal to the selected voltage range. The two points (x1, y1) and (x2, y2) define the scaling characteristic.

p0776 = 1
Voltage output, 0 V ... 10 V

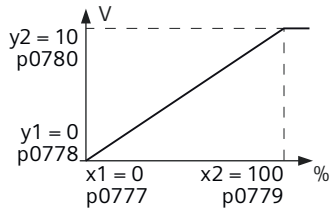

More information

For more information about wiring analog outputs, see Section "Connecting the inputs and outputs (Page 159)".

Parameters

The following list includes the parameters of the "Analog outputs" function.

Number	Name	Unit
r0062	Speed setpoint after the filter	[rpm]
r0063	Speed actual value smoothed	[rpm]
r0070	Actual DC link voltage	[V]
r0079[0...1]	Torque setpoint total	[Nm]
r0080	Torque actual value	[Nm]
c0771[0...1]	CU analog outputs signal	[%]
p29342	Reference frequency assigned to pulse input frequency	
p29343	Reference frequency assigned to remaining number of pulses	
r29350	Pulse input frequency	
r29351	Remaining number of pulses	

9.4 Modbus communication

Overview

The SINAMICS S200 PTI converter can communicate with a PLC using the Modbus RTU protocol. The communication takes place over the RS485 interface (Pin 23 and Pin 25) integrated in X132.

Description of function

The Modbus protocol is a communication protocol based on the client-server model. In Modbus network, the PLC is the client for initiating communication and sending requests, and the connected S200 PTI converter operates as the server. Selected parameters and process data are exchanged via Modbus registers in the converter.

The Modbus protocol supports two communication modes:

- Unicast mode
  The client sends a message to a specific server. The server address (ranging from 1 to 247) is specified in the message.
- Broadcast mode
  The client sends a message to all the connected servers. The server address in the broadcast message is set to 0. The broadcast mode does not require servers to respond; thus, the mode is used for writing commands only.

9.4.1 Modbus RTU message frame

Overview

The PLC and the converter exchange data using Modbus message frames. The frames are separated by a silent interval of at least 3.5 bytes.

Description of function

A Modbus RTU frame has a maximum size of 256 bytes and consists of the following fields:

- Address
  The frame starts with the address of the target server. For broadcast messages, the address is set to 0.
- Function code
  The function code determines the type of action for the server to perform.
- Data
  The data field contains function-specific data.
- CRC (cyclic redundancy check)
  The CRC field checks the content of the message.

9.4.2 Supported function codes

Overview

In Modbus RTU frames, function codes determine the type of action for the addressed server to perform. The S200 PTI converter supports three function codes: FC3, FC6, and FC16.

Description of function

The S200 PTI converter supports the following three function codes. The structure of the data field in Modbus RTU frames varies depending on the selected function code.

Function code 0x03 (FC3): read values from multiple holding registers

FC3 allows the PLC to read data from multiple holding registers of the converter.

When FC = 0x03, the request message contains four bytes of data in the data field:

- Two bytes for the starting address of register
- Two bytes for the number of registers to be read

Table 9-9 FC3 - Request message frame

Byte 1	Byte 2	Byte 3	Byte 4	Byte 5	Byte 6	Byte 7	Byte 8
Address	FC (0x03)	Start address		Number of registers		CRC	
		High	Low	High	Low	High	Low

In response, the converter sends the following message frame:

Table 9-10 FC3 - Response message frame

Byte 1	Byte 2	Byte 3	Byte 4	Byte 5	...	Byte N*2 + 2	Byte N*2 + 3	Byte N*2 + 4	Byte N*2 + 5
Address	FC (0x03)	Number of bytes	Register 1 value		...	Register N value		CRC	
			High	Low		High	Low	High	Low

Function code 0x06 (FC6): write a value to a single register

FC6 allows the PLC to write a value to a register of the converter.

When FC = 0x06, the request message contains four bytes of data in the data field:

- Two bytes for the register address
- Two bytes for the new value to be written to the register

Table 9-11 FC6 - Request message frame

Byte 1	Byte 2	Byte 3	Byte 4	Byte 5	Byte 6	Byte 7	Byte 8
Address	FC (0x06)	Register address		New register value		CRC	
		High	Low	High	Low	High	Low

In response, the converter sends the following message frame:

Table 9-12 FC6 - Response message frame

Byte 1	Byte 2	Byte 3	Byte 4	Byte 5	Byte 6	Byte 7	Byte 8
Address	FC (0x06)	Register address		New register value		CRC	
		High	Low	High	Low	High	Low

Function code 0x10 (FC16): write values to multiple registers

FC16 allows the PLC to write values to multiple registers of the converter.

When FC = 0x10, the request message contains 2N + 5 bytes of data in the data field:

- Two bytes for the starting address
- Two bytes for the number of registers
- One byte for the byte count
- 2N bytes for the register values

Table 9-13 FC16 - Request message frame

Byte 1	Byte 2	Byte 3	Byte 4	Byte 5	Byte 6	Byte 7	Byte 8	Byte 9	...	Byte N*2 + 6	Byte N*2 + 7	Byte N*2 + 8	Byte N*2 + 9
Address	FC (0x10)	Start address		Number of registers		Number of bytes	Register 1 value		...	Register N value		CRC	
		High	Low	High	Low		High	Low		High	Low	High	Low

In response, the converter sends the following message frame:

Table 9-14 FC16 - Response message frame

Byte 1	Byte 2	Byte 3	Byte 4	Byte 5	Byte 6	Byte 7	Byte 8
Address	FC (0x10)	Start address		Number of registers		CRC	
		High	Low	High	Low	High	Low

9.4.3 Available registers

Overview

Registers in the converter store data to be exchanged with the PLC.

Description of function

The S200 PTI converter supports the subsequently listed registers in the mapping tables.

Register mapping tables have the following columns:

- Register: register ID in decimal
- Description: detailed information about data stored in the register
- Modbus access: access type of the register
  - R: the register can be read only.
  - R/W: the register can be read and written.

Note

To enable write access to R/W registers for parameter data, make sure that the Anonymous user is activated and assigned the role "Drive Ext. Role Fieldbus".

R/W registers for process data (e.g., Registers 40100 and 40101) do not require these settings.

- Unit: unit of data stored in the register
- Scaling factor: scaling factor to convert fractional values to integer data for transmission via Modbus
- Range or ON/OFF text: permissible value range or on/off status
- Data/parameter: data or parameter interconnected to the register

9.4.3.1 Registers for process data

Overview

The S200 PTI converter supports transmission of process data via Modbus registers.

Description of function

The following registers are assigned to process data. The process data may vary depending on the control mode.

Table 9-15 Assigning Modbus registers to process data

Register	Description	Modbus access	Unit	Scaling factor	Range or ON/OFF text	Data/parameter
Control data						
40100	Control word 1 (PTI, S, T)	R/W	-	1	-	Process data 1, PZD1
40101	Speed setpoint A (S)	R/W	-	1	-	Process data 2, PZD2
Status data						
40110	Status word 1 (PTI, S, T)	R	-	1	-	Process data 1, PZD1
40111	• Pulse step status word (PTI) • Actual speed A (S) • Actual speed A (T)	R	-	1	-	Process data 2, PZD2

Register	Description	Modbus access	Unit	Scaling factor	Range or ON/OFF text	Data/parameter
40112	Encoder actual position value high word (PTI)[1]	R	-	1	-	Process data 3, PZD3
40113	Encoder actual position value low word (PTI)[1]	R	-	1	-	Process data 4, PZD4
40114	Speed actual value B high word (PTI)	R	-	1	-	Process data 5, PZD5
40115	Speed actual value B low word (PTI)	R	-	1	-	Process data 6, PZD6

[1] The data type is unsigned32.

9.4.3.2 Control word 1

Overview

The control word 1 (STW1) is exchanged via register 40100 and available in all control modes.

Description of function

The definition of STW1 varies in different control modes.

Table 9-16 Control word 1 in PTI mode

Bit	Signal	Description
0	0 = OFF1	The motor brakes with the ramp-down time p1121 of the ramp-function generator. The converter switches off the motor at standstill.
	0 → 1 = ON	The converter is ready to switch on the motor.
1	0 = OFF2	The converter switches off the motor immediately. The motor coasts down to a standstill.
	1 = No OFF2	The motor can be switched on with the ON command.
2	0 = Quick stop (OFF3)	The motor brakes with the OFF3 ramp-down time p1135. The converter switches off the motor at standstill.
	1 = No quick stop (OFF3)	The motor can be switched on with the ON command.
3	0 = Inhibit operation	The converter switches off the motor immediately with pulses suppressed.
	1 = Enable operation	The converter switches on the motor.
4	Reserved	
5	Reserved	
6	Reserved	
7	0 → 1 = Acknowledge faults	Acknowledge faults.
8	Reserved	
9	Reserved	

Bit	Signal	Description
10	0 = No control via PLC	The converter ignores the process data from the PLC.
	1 = Control via PLC	The converter accepts the process data from the PLC.
11	Reserved	
12	Reserved	
13	Reserved	
14	Reserved	
15	Reserved	

Table 9-17 Control word 1 in S mode

Bit	Signal	Description
0	0 = OFF1	The motor brakes with the ramp-down time p1121 of the ramp-function generator. The converter switches off the motor at standstill.
	0 → 1 = ON	The converter is ready to switch on the motor.
1	0 = OFF2	The converter switches off the motor immediately. The motor coasts down to a standstill.
	1 = No OFF2	The motor can be switched on with the ON command.
2	0 = Quick stop (OFF3)	The motor brakes with the OFF3 ramp-down time p1135. The converter switches off the motor at standstill.
	1 = No quick stop (OFF3)	The motor can be switched on with the ON command.
3	0 = Inhibit operation	The converter switches off the motor immediately with pulses suppressed.
	1 = Enable operation	The converter switches on the motor.
4	0 = Inhibit RFG	The converter immediately sets its ramp-function generator output to 0.
	1 = Do not inhibit RFG	The ramp-function generator can be enabled.
5	Reserved	
6	0 = Inhibit setpoint	The converter immediately sets its ramp-function generator input to 0.
	1 = Enable setpoint	The setpoint can be enabled.
7	0 → 1 = Acknowledge faults	Acknowledge faults.
8	Reserved	
9	Reserved	
10	0 = No control via PLC	The converter ignores the process data from the PLC.
	1 = Control via PLC	The converter accepts the process data from the PLC.
11	1 = Direction reversal	Invert the setpoint in the converter.
12	Reserved	
13	Reserved	
14	Reserved	
15	Reserved	

Table 9-18 Control word 1 in T mode

Bit	Signal	Description
0	0 → 1 = ON	The converter is ready to switch on the motor.
1	0 = OFF2	The converter switches off the motor immediately. The motor coasts down to a standstill.
	1 = No OFF2	The motor can be switched on with the ON command.
2	0 = Quick stop (OFF3)	The motor brakes with the OFF3 ramp-down time p1135. The converter switches off the motor at standstill.
	1 = No quick stop (OFF3)	The motor can be switched on with the ON command.
3	0 = Inhibit operation	The converter switches off the motor immediately with pulses suppressed.
	1 = Enable operation	The converter switches on the motor.
4	Reserved	
5	Reserved	
6	0 = Inhibit setpoint	The converter immediately sets its ramp-function generator input to 0.
	1 = Enable setpoint	The setpoint can be enabled.
7	0 → 1 = Acknowledge faults	Acknowledge faults.
8	Reserved	
9	Reserved	
10	0 = No control via PLC	The converter ignores the process data from the PLC.
	1 = Control via PLC	The converter accepts the process data from the PLC.
11	1 = Direction reversal	Invert the setpoint in the converter
12	Reserved	
13	Reserved	
14	Reserved	
15	Reserved	

9.4.3.3 Status word 1

Overview

The status word 1 (ZSW1) is exchanged via register 40110.

Description of function

Table 9-19 Status word 1 in PTI, S, and T modes

Bit	Signal
0	RDY: Servo ready
1	RDY_ON: Ready for Servo on
2	FAULT: Servo fault
3	INP: In target position
4	ZSP: Zero speed detected

Bit	Signal
5	TLR: Torque limit reached
6	MBR: Motor holding brake control
7	OLL: Overload level reached
8	WARNING 1: Warning 1 condition satisfied
9	WARNING 2: Warning 2 condition satisfied
10	SPDR: Speed reached
11	REFOK: Homing complete
12	CM_STA: Current control mode
13	STO_EP: STO status
14	Reserved
15	Reserved

9.4.3.4 Registers for parameter data

Overview

The S200 PTI converter supports transmission of parameter data via Modbus registers.

Description of function

The following registers are assigned to parameter data.

Table 9-20 Assigning Modbus registers to parameter data - inputs and outputs

Register	Description	Modbus access	Unit	Scaling factor	Range or ON/OFF text	Data/parameter
Digital outputs						
40200	DO0	R	-	1	HIGH/LOW	r747.0
40201	DO1	R	-	1	HIGH/LOW	r747.1
40202	DO2	R	-	1	HIGH/LOW	r747.2
40203	DO3	R	-	1	HIGH/LOW	r747.3
40204	DO4	R	-	1	HIGH/LOW	r747.4
40205	DO5	R	-	1	HIGH/LOW	r747.5
Analog outputs						
40220	AO0	R	%	100	-	r0774[0]
40221	AO1	R	%	100	-	r0774[1]
Digital inputs						
40240	DI0	R	-	1	HIGH/LOW	r722.0
40241	DI1	R	-	1	HIGH/LOW	r722.1
40242	DI2	R	-	1	HIGH/LOW	r722.2
40243	DI3	R	-	1	HIGH/LOW	r722.3
40244	DI4	R	-	1	HIGH/LOW	r722.4
40245	DI5	R	-	1	HIGH/LOW	r722.5

Register	Description	Modbus access	Unit	Scaling factor	Range or ON/OFF text	Data/parameter
40246	DI6	R	-	1	HIGH/LOW	r722.6
40247	DI7	R	-	1	HIGH/LOW	r722.7
40248	DI8	R	-	1	HIGH/LOW	r722.8
40249	DI9	R	-	1	HIGH/LOW	r722.9
Analog inputs						
40260	AI0	R	%	100	-	r0755[0]
40261	AI1	R	%	100	-	r0755[1]
Digital input simulation						
40281	Enable DI simulation (Low Part)	R/W	-	1	HIGH/LOW	p795 Low Part
40283	Set point DI simulation (Low Part)	R/W	-	1	HIGH/LOW	p796 Low Part

Table 9-21 Assigning Modbus registers to parameter data - converter data

Register	Description	Modbus access	Unit	Scaling factor	Range or ON/OFF text	Data/parameter
40301	CU Firmware	R	-	1	-	r964[2]
40302	Firmware patch/hot fix	R	-	1	-	r964[6]
40322	Ramp-up time	R/W	s	100	10.00 ... 655.35	p1120
40323	Ramp-down time	R/W	s	100	10.00 ... 655.35	p1121
40324	Reference speed	R/W	rpm	1	6 ... 65535	p2000
40325	Control mode	R/W	-	1	0 ... 7	p29003
40330	Save all parameters	R/W	-	1	0 ... 1	p0977
Converter diagnostics						
40340	Speed setpoint	R	rpm	1	-	r0020
40341	Actual speed value	R	rpm	1	-	r0021
40344	DC-link voltage	R	V	1	-	r0026
40345	Actual current value	R	A	100	-	r0027
40346	Actual torque value	R	Nm	100	-	r0031
40347	Actual active power	R	KW	100	-	r0032
40348	Energy consumption	R	KWh	1	-	r0039
40354	Motor utilization	R	%	100	-	r0034
40356	Power unit heat sink fan wear counter	R	%	100	-	r277
40357	Power unit temperatures	R	°C	100	-	r37[0]
40358/40359	Encoder actual position value	R	-	1	-	r0479[0]

Table 9-22 Assigning Modbus registers to parameter data - fault diagnostics

Register	Description	Modbus access	Unit	Scaling factor	Range or ON/OFF text	Data/parameter
40400	Failure number, index 0	R	-	1	-	r0947[0]
40401	Failure number, index 1	R	-	1	-	r0947[1]
40402	Failure number, index 2	R	-	1	-	r0947[2]
40403	Failure number, index 3	R	-	1	-	r0947[3]
40404	Failure number, index 4	R	-	1	-	r0947[4]
40405	Failure number, index 5	R	-	1	-	r0947[5]
40406	Failure number, index 6	R	-	1	-	r0947[6]
40407	Failure number, index 7	R	-	1	-	r0947[7]
40408	Alarm number	R	-	1	-	r2122[0]
40409	Latest alarm	R	-	1	-	r2132

Table 9-23 Assigning Modbus registers to parameter data - Safety message

Register	Description	Modbus access	Unit	Scaling factor	Range or ON/OFF text	Data/parameter
40420	SI message number, index 0	R	-	1	-	r60047[0]
40421	SI message number, index 1	R	-	1	-	r60047[1]
40422	SI message number, index 2	R	-	1	-	r60047[2]
40423	SI message number, index 3	R	-	1	-	r60047[3]
40424	SI message number, index 4	R	-	1	-	r60047[4]
40425	SI message number, index 5	R	-	1	-	r60047[5]
40426	SI message number, index 6	R	-	1	-	r60047[6]
40427	SI message number, index 7	R	-	1	-	r60047[7]

Table 9-24 Modbus registers for communication via data set 47 (DS47)

Register	Description	Modbus access	Unit	Scaling factor	Range or ON/OFF text	Data/parameter
40601	DS47 control	R/W	-	-	-	-
40602	DS47 header	R/W	-	-	-	-
40603	DS47 data 1	R/W	-	-	-	-
...	...	R/W	-	-	-	-
40722	DS47 data 120	R/W	-	-	-	-

Table 9-25 Assigning Modbus registers to parameter data - number of pulse per revolution

Register	Description	Modbus access	Unit	Scaling factor	Range or ON/OFF text	Data/parameter
40900	Fixed speed setpoint 1	R/W	-	p2000[1)]	-210000.000 ... 210000.000	p1001
40901	Fixed speed setpoint 2	R/W	-	p2000[1)]	-210000.000 ... 210000.000	p1002
40902	Fixed speed setpoint 3	R/W	-	p2000[1)]	-210000.000 ... 210000.000	p1003
40903	Fixed speed setpoint 4	R/W	-	p2000[1)]	-210000.000 ... 210000.000	p1004
40904	Fixed speed setpoint 5	R/W	-	p2000[1)]	-210000.000 ... 210000.000	p1005
40905	Fixed speed setpoint 6	R/W	-	p2000[1)]	-210000.000 ... 210000.000	p1006
40906	Fixed speed setpoint 7	R/W	-	p2000[1)]	-210000.000 ... 210000.000	p1007

[1)] The default value of p2000 is the maximum motor speed. Register value = (Parameter value • 4000 hex)/p2000

Table 9-26 Assigning Modbus registers to parameter data - internal torque

Register	Description	Modbus access	Unit	Scaling factor	Range or ON/OFF text	Data/parameter
40950	Fixed torque setpoint	R/W	%	100	-100 ... 100	p29043

Table 9-27 Assigning Modbus registers to parameter data - PTI position

Register	Description	Modbus access	Unit	Scaling factor	Range or ON/OFF text	Data/parameter
40960/40961	Number of pulse per revolution	R/W	-	1	0 ... 16777215	p29271
40962/40963	Numerator of electronic gear 0	R/W	-	1	1 ... 2147483647	p29272[0]
40964/40965	Numerator of electronic gear 1	R/W	-	1	1 ... 2147483647	p29272[1]
40966/40967	Numerator of electronic gear 2	R/W	-	1	1 ... 2147483647	p29272[2]
40968/40969	Numerator of electronic gear 3	R/W	-	1	1 ... 2147483647	p29272[3]
40970/40971	Denominator of electronic gear	R/W	-	1	1 ... 2147483647	p29273
40972/40973	Position setpoint (PTI)	R	-	1	-	r29288
40974/40975	Actual position value (PTI)	R	-	1	-	r29186
40976	Pulse setpoint status word	R	-	1	-	p29289

9.4.4 Cyclic communication

Requirement

- You have the necessary rights to edit drive data.
- If you want to write to R/W registers for paremeter data, make sure that the Anonymous user is activated and assigned the role "Drive Ext. Role Fieldbus".

Procedure

Proceed as follows to set cyclic communication:

1. In the Web server, configure the baud rate, device address, monitoring time, and parity for Modbus communication.
2. Select the command and setpoint source by parameter p29008.
3. Set control mode for the converter by p29003.
4. Save the parameters.
5. Configure the PLC parameters according to the Modbus communication settings on the converter.
6. Set the address of the target converter on the PLC side.
   - For broadcast mode, set the device address to 0.
   - For unicast mode, specify the desired target device address.
7. If you set p29008 = 1, write the control word and setpoint value via PLC.

Note

c0849 should be connected to DI6 by default, and its value should be set to high.

Bit 10 of the register 40100 must be set to 1 to allow the PLC to control the drive.

Example

The following examples use S7-1200 to illustrate the cyclic communication between the PLC and the converter.

Example 1

Proceed as follows to use the setpoint and control word from Modbus as the control source in S control mode:

1. In the Web server, configure the baud rate, device address, monitoring time, and parity for Modbus communication.
2. Select Modbus control source by setting p29008 = 1.
3. Select the S control mode by setting p29003 = 2.
4. Save the parameters.

5. Configure the baud rate and parity on the PLC according to the converter settings.

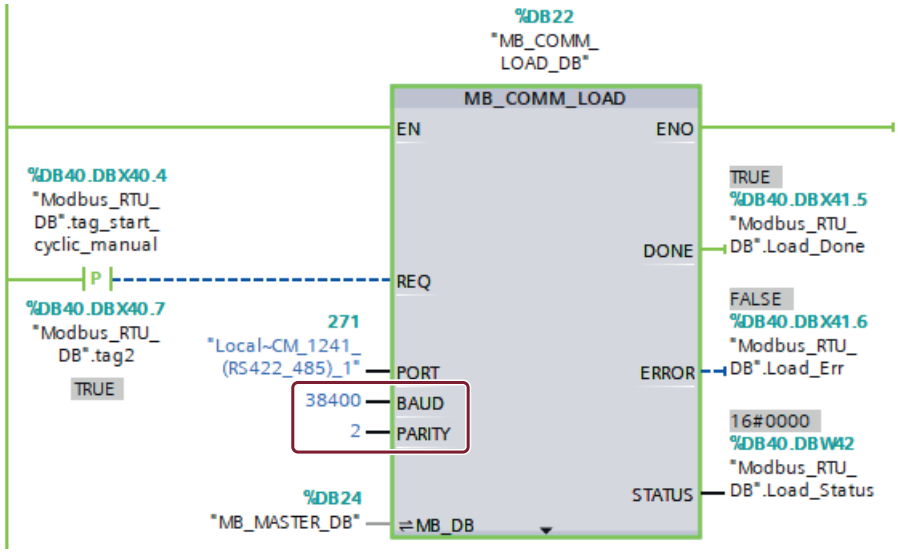

Figure 9-1 Configure the PLC settings

6. Set the address of the target converter, and write the control word to the register 40100. To enable PLC control, set bit 10 of the register 40100 to 1. To send the SON signal to the converter, set OFF2 and OFF3 to 1 and trigger a rising edge for OFF1.
   In the example below, first write 045E to the register 40100, and then update the value to 045F to enable the SON signal.

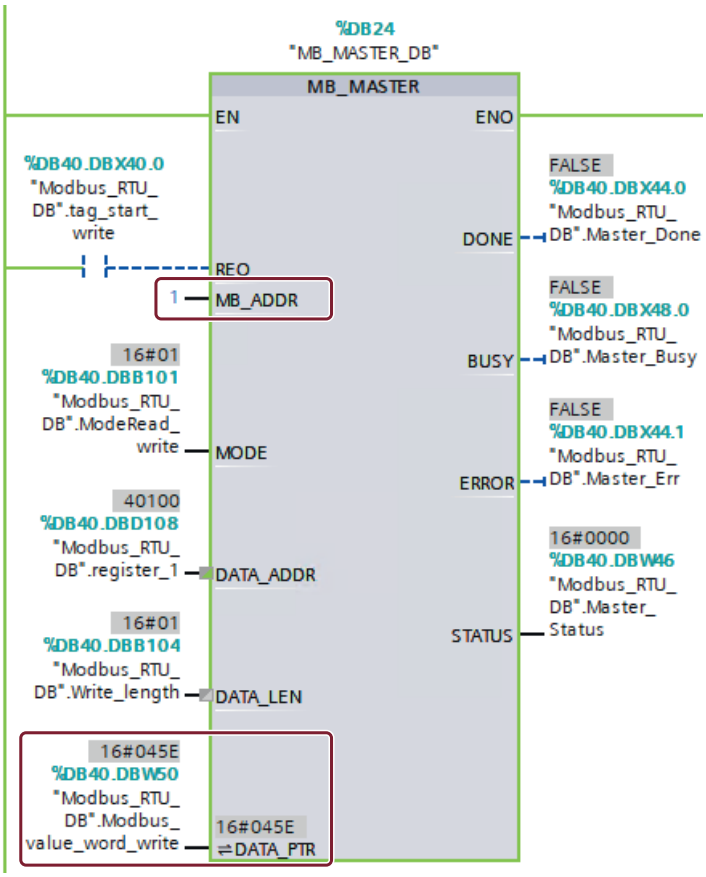

Figure 9-2 Write the control word

7. Write the speed setpoint to the register 40101. You can calculate the speed setpoint value according to the scaling factor. Value 0x4000 represents 100% × reference speed (p2000). In the example below, 0x1000 represents 25% × reference speed.

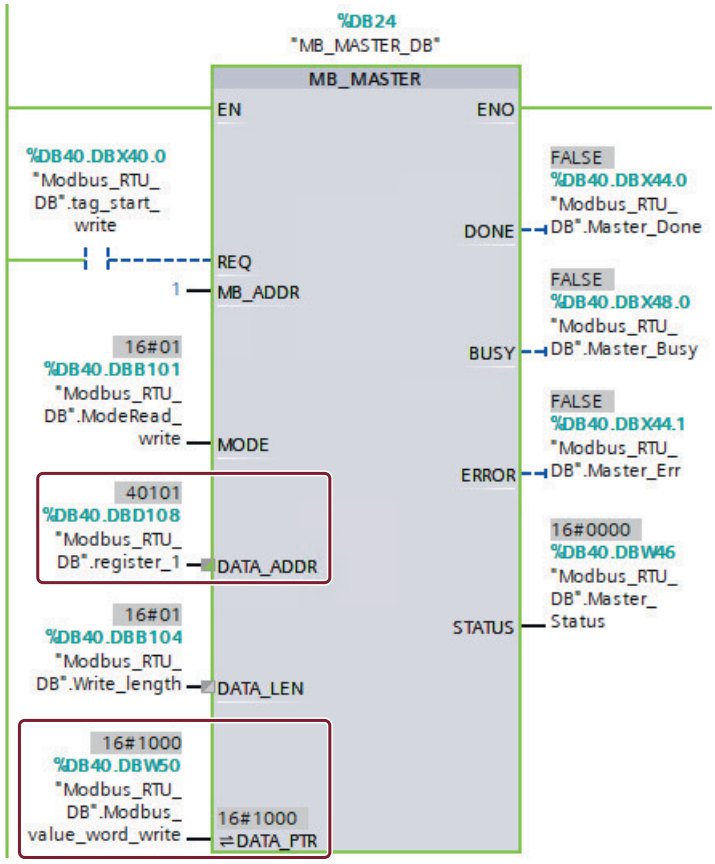

Figure 9-3 Write the speed setpoint

Example 2

Proceed as follows when the setpoint and control word from Modbus is not used as the control source in S control mode:

1. In the Web server, configure the baud rate, device address, monitoring time, and parity for Modbus communication.
2. Select Modbus control source by setting p29008 = 2.
3. Select the S control mode by setting p29003 = 2.
4. Save the parameters.

5. Configure the baud rate and parity on the PLC according to the converter settings.

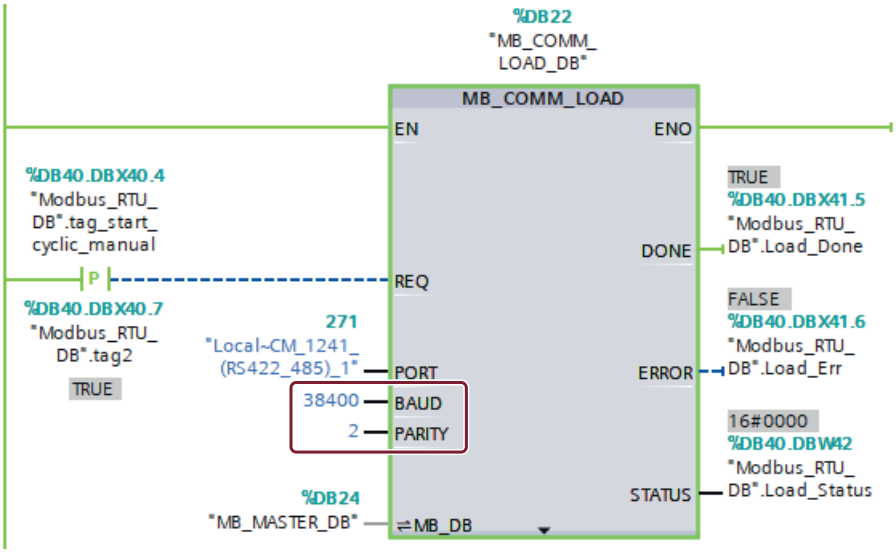

Figure 9-4 Configure the PLC settings

6. Set the address of the target converter.

7. Set the motor to SON status via DI signals.
8. Read the fixed speed setpoint 1 via the register 40900. You can calculate the speed value according to the scaling factor. Value 0x4000 represents 100% × reference speed (p2000). In the example below, 0x666 represents 10% × reference speed.

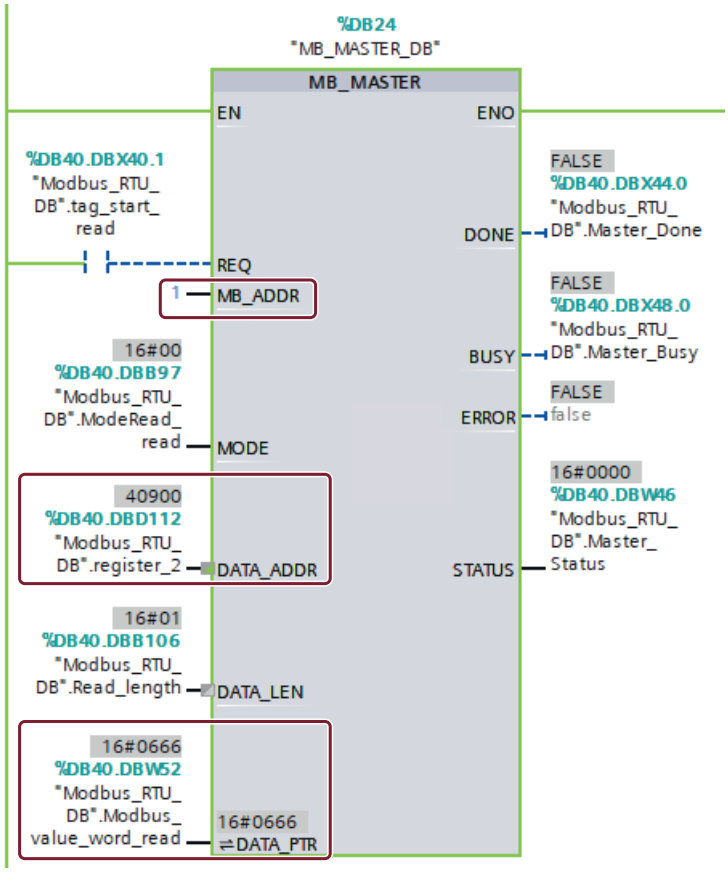

Figure 9-5 Read the fixed speed setpoint 1

Result

You have set the cyclic communication.

9.4.5 Acyclic communication

Overview

The S200 PTI converter supports acyclic communication of parameter data via data set 47 (registers 40601 ... 40722).

The following examples use S7-1200 to illustrate the acyclic communication between the PLC and the converter.

Description of function

You can access parameter data that is not stored in designated registers via registers 40601 ... 40722.

Register 40601 controls acyclic communication function. Register 40602 contains the subfunction code (always 47 = 2F hex). Registers 40603 ... 40722 store user data.

Table 9-28 Acyclic communication via DS47

Register value				**Description**
40601	**40602**		**40603 ... 40722**	
0	47	...	...	Write values for acyclic access
1	47	Request length in bytes	Request data	Activate acyclic access
2	47	Response length in bytes	Response data	Response for a successful request
2	47	0	Error code	Response for an erroneous request

9.4.5.1 Reading parameter values

Overview

To read a parameter value, the PLC first sends a write request to the corresponding registers and then sends a read request to read the value from the registers. After receiving the read request, the converter sends its response to the PLC.

Description of function

Values in italics in the following tables mean that these values must be adapted to the specific request.

Table 9-29 Request to read parameters

Data block	**Byte n**	**Bytes n + 1**	**n**
Header	**Reference** *01 hex ... FF hex*	**01 hex**: Read job	0
	01 hex (ID of drive objects, for S200 always = 01 hex)	**Number of parameters (m)**	2
Address, parameter 1	**Attribute** *10 hex:* Parameter value	**Number of the indices** *00 hex ... EA hex* (For parameters without index: 00 hex)	4
	Parameter number *0001 hex ... FFFE hex*		6
	Number of the 1st index *0000 hex ... FFFE hex* (for parameters without index: 0000 hex)		8
	...		...
Address, parameter 2	...		...
...	...		...
Address, parameter m	...		...

Table 9-30 Converter response to a read request

Data block	Byte n	Bytes n + 1	n
Header	**Reference** (identical to a read request)	**01 hex**: Converter has executed the read request. **81 hex**: Converter was not able to completely execute the read request.	0
	01 hex (ID of drive objects, for S200 always = 01 hex)	**Number of parameters (m)** (identical to the read request)	2
Values, parameter 1	**Format** *02 hex*: Integer8 *03 hex*: Integer16 *04 hex*: Integer32 *05 hex*: Unsigned8 *06 hex*: Unsigned16 *07 hex*: Unsigned32 *08 hex*: FloatingPoint *0A hex*: OctetString *0D hex*: TimeDifference *34 hex*: TimeOfDay without date indication *35 hex*: TimeDifference with date indication *36 hex*: TimeDifference without date indication *41 hex*: Byte *42 hex*: Word *43 hex*: Double word *44 hex*: Error	**Number of index values** or - for a negative response - **number of error values**	4
	Value of the 1st index or - in case of negative response - **error value 1**		6
	...		...
Values, parameter 2	...		
...	...		
Values, parameter m	...		

Example

You can use FC16 to read multiple parameters acyclically. Here is an example of reading p1215 and p1120 from Device 1.

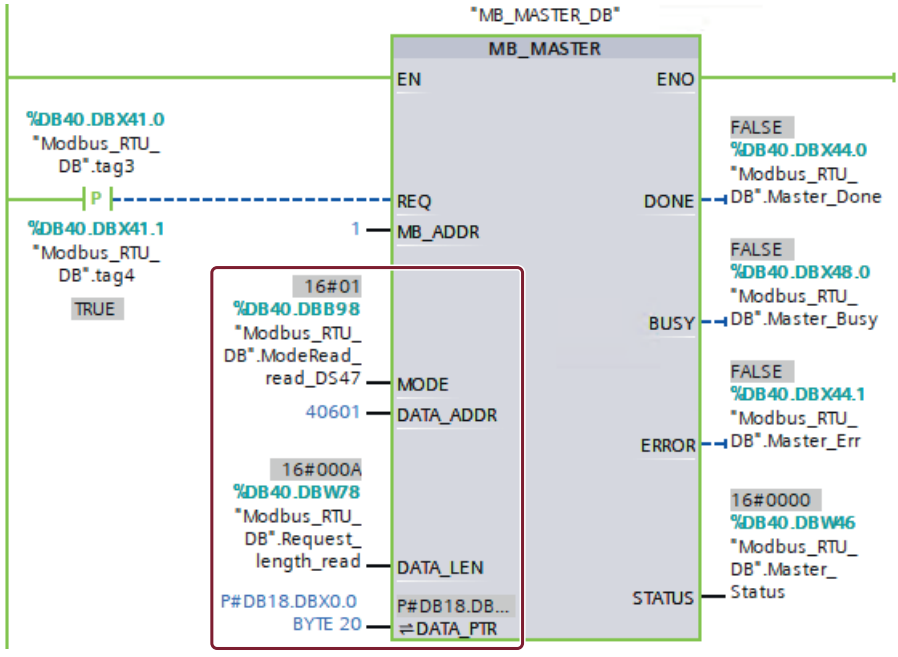

Figure 9-6 Write p1215 and p1120 to DS47 registers

The message frame of the write request is as follow:

Modbus_DS47_Read_Request_DB

Name	Data type	Offset	Start value	Monitor value	Retain	Accessible f...	Writa...	Visible in ...
Static								
DS47 control	Word	0.0	16#1	16#0001				
Function code	Byte	2.0	16#2F	16#2F				
Task data length	Byte	3.0	16#10	16#10				
Request reference	Byte	4.0	16#80	16#80				
Request ID	Byte	5.0	16#01	16#01				
Object ID	Byte	6.0	16#01	16#01				
Num of parameter	Byte	7.0	16#02	16#02				
Para_Attribute	Byte	8.0	16#10	16#10				
Num of index	Byte	9.0	16#01	16#01				
Parameter number	Word	10.0	16#04BF	16#04BF				
Start index	Word	12.0	16#0	16#0000				
Para_Attribute_1	Byte	14.0	16#10	16#10				
Num of index_1	Byte	15.0	16#01	16#01				
Parameter number_1	Word	16.0	16#0460	16#0460				
Start index_1	Word	18.0	16#0	16#0000				

Table 9-31 Write request: write p1215 and p1120 to DS47 registers

	Byte	Description
Header		
01 h	0	Server address
10 h	1	Function code (FC16)
0258 h	2,3	Register start address
000A h	4,5	Number of registers to be read (40601 … 40610)
14 h	6	Number of data bytes (10 registers, each 2 bytes = 20 bytes)
User data		
0001 h	7,8	40601: DS47 Control = 1 (activate request)
2F10 h	9,10	40602: Function 2F h (47), request length 16 bytes (10 h)
8001 h	11,12	40603: Request reference = 80 h, request identifier = 1 h
0102 h	13,14	40604: S200 = 1 h, number of parameters = 2
1001 h	15,16	40605: Attribute, number of elements of the first parameter
04BF h	17,18	40606: First parameter number = p1215
0000 h	19,20	40607: First parameter subindex = 0
1001 h	21,22	40608: Attribute, number of elements of the second parameter
0460 h	23,24	40609: Second parameter number = p1120
0000 h	25,26	40610: Second parameter subindex = 0

After the parameter values are written to the registers, the PLC sends the following read request to read values from the DS47 registers.

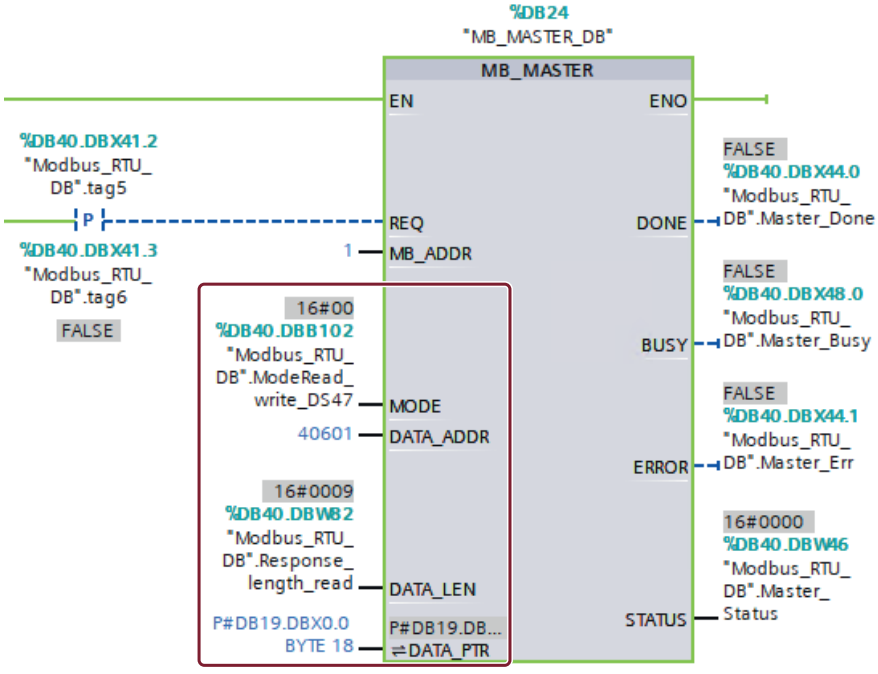

Figure 9-7 Read request: read values of p1215 and p1120 from DS47 registers

Depending on whether the read job is successful, the converter sends one of the following responses:

Table 9-32 Response for successful read operation

	Byte	Description
Header		
01 h 03 h 20 h	0 1 2	Server address Function code (read) Number of following data bytes (20 h: 32 bytes ≙ 16 registers)
User data		
0002 h 2F0E h 8001 h 0102 h 0301 h 0001 h 0801 h 4142 h 6666 h	3,4 5,6 7,8 9,10 11,12 13,14 15,16 17,18 19,20	40601: DS47 Control = 2 (request was executed) 40602: Function code 2F h (47), response lengths 14 bytes (0e h) 40603: Request reference mirrored = 80 h, response identifier = 1 (request parameter) 40604: S200 = 1 h, number of parameters = 2 40605: Format, number of elements of the first parameter 40606: First parameter value = 1 40607: Format, number of elements of the second parameter 40608: Second parameter value = 12.15 (41426666 h) 40609: Second parameter value

Table 9-33 Response for unsuccessful read operation

	Byte	Description
Header		
01 h 03 h 20 h	0 1 2	Server address Function code (read) Number of following data bytes (20 h: 32 bytes ≙ 16 registers)
User data		
0001 h 2F00 h 0004 h	3,4 5,6 7,8	40601: Check value 1 = request is processed 40602: Function 2F h (47), response length 0 (fault) 40603: Error code: 0004 Response Not Ready (response has still not been issued)

9.4.5.2 Changing parameter values

Overview

To change a parameter value, the PLC first sends a write request to the corresponding registers and then sends a read request to read the value from the registers. After receiving the read request, the converter sends its response to the PLC.

Description of function

Values in italics in the following tables mean that these values must be adapted to the specific request.

Table 9-34 Request to change parameters

Data block	Byte n	Bytes n + 1	n
Header	**Reference** *01 hex ... FF hex*	**02 hex**: Change request	0
	01 hex (ID of drive objects, for S200 always = 01 hex)	**Number of parameters (m)** *01 hex ... 27 hex*	2
Address, parameter 1	**10 hex**: Value of the parameter	**Number of indices** *00 hex ... EA hex* (00 hex and 01 hex are equivalents)	4
	Parameter number *0001 hex ... FFFF hex*		6
	Number of the 1st index *0000 hex ... FFFE hex*		8
	...		...
Address, parameter 2	...		
...	...		...
Address, parameter m	...		
Values, parameter 1	**Format** *02 hex:* Integer 8 *03 hex:* Integer 16 *04 hex:* Integer 32 *05 hex:* Unsigned 8 *06 hex:* Unsigned 16 *07 hex:* Unsigned 32 *08 hex:* Floating Point *0A hex:* Octet String *0D hex:* Time Difference *34 hex*: TimeOfDay without date indication *35 hex*: TimeDifference with date indication *36 hex*: TimeDifference without date indication *41 hex:* Byte *42 hex:* Word *43 hex:* Double word	**Number of index values** *00 hex ... EA hex*	
	Value of the 1st index		
	...		
Values, parameter 2	...		
...	...		
Values, parameter m	...		

Table 9-35 Response, if the converter has executed the change request

Data block	Byte n	Bytes n + 1	n
Header	**Reference** (identical to a change request)	**02 hex** (change request successful)	0
	01 hex (ID of drive objects, for S200 always = 01 hex)	**Number of parameters** (identical to a change request)	2

Table 9-36 Response if the converter was not able to completely execute the change request

Data block	Byte n	Bytes n + 1	n
Header	**Reference** (identical to a change request)	**82 hex:** (Converter was not able to completely execute the write request)	0
	01 hex (ID of drive objects, for S200 always = 01 hex)	**Number of parameters** (identical to a change request)	2
Values, parameter 1	**Format** 40 hex: Zero (change request for this data block executed) 44 hex: Error (change request for this data block not executed)	**Number of error values** 00 hex 01 hex or 02 hex	4
	Only for "Error" - **error value 1**		6
	Only for "Error" - **error value 2** Error value 2 is either zero, or it contains the number of the first index where the error occurred.		8
Values, parameter 2	...		
...	...		...
Values, parameter m	...		

Example

You can use FC16 to write parameters acyclically. Here is an example of setting p1130 = 1.28 and p29130 = 2.

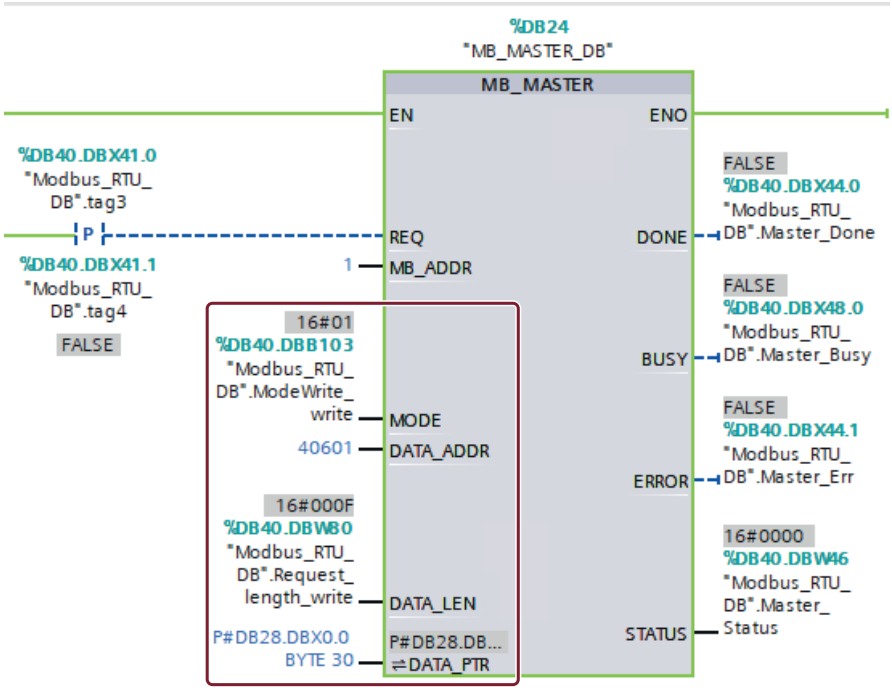

Figure 9-8 Write the parameter values of p1130 and 29130 to DS47 registers

Modbus_DS47_Write_Request

Name	Data type	Offset	Start value	Monitor value	Retain	Accessible f...	Writa...	Visible in ...
Static								
DS47 control	Word	0.0	16#1	16#0001		✓	✓	✓
Function code	Byte	2.0	16#2F	16#2F		✓	✓	✓
Task data length	Byte	3.0	16#1A	16#1A		✓	✓	✓
Request reference	Byte	4.0	16#80	16#80		✓	✓	✓
Request ID	Byte	5.0	16#02	16#02		✓	✓	✓
Object ID	Byte	6.0	16#01	16#01		✓	✓	✓
Num of parameter	Byte	7.0	16#02	16#02		✓	✓	✓
Para_Attribute	Byte	8.0	16#10	16#10		✓	✓	✓
Num of index	Byte	9.0	16#01	16#01		✓	✓	✓
Parameter number	Word	10.0	16#046A	16#046A		✓	✓	✓
Start index	Word	12.0	16#0	16#0000		✓	✓	✓
Para_Attribute_1	Byte	14.0	16#10	16#10		✓	✓	✓
Num of index_1	Byte	15.0	16#01	16#01		✓	✓	✓
Parameter number_1	Word	16.0	16#71CA	16#71CA		✓	✓	✓
Start index_1	Word	18.0	16#0	16#0000		✓	✓	✓
P1_type	Word	20.0	16#0801	16#0801		✓	✓	✓
p1_value1	Word	22.0	16#3FA3	16#3FA3		✓	✓	✓
p1_value2	Word	24.0	16#D70A	16#D70A		✓	✓	✓
p2_type	Word	26.0	16#0301	16#0301		✓	✓	✓
p2_value	Word	28.0	16#0002	16#0002		✓	✓	✓

Table 9-37 Write request: set p1130 = 1.28 and p29130 = 2

	Byte	Description
Header		
01 h	0	Server address
10 h	1	Function code (FC16)
0258 h	2,3	Register start address
000A h	4,5	Number of registers to be written to (40601 … 40615)
1E h	6	Number of data bytes (15 registers, each 2 bytes = 30 bytes)
User data		
0001 h	7,8	40601: DS47 Control = 1 (activate request)
2F1A h	9,10	40602: Function 2F h (47), request length 26 bytes (1A h)
8002 h	11,12	40603: Request reference = 80 h, request identifier = 2 h (write)
0102 h	13,14	40604: S200 = 1 h, number of parameters = 2
1001 h	15,16	40605: Attribute, number of elements of the first parameter
046A h	17,18	40606: First parameter number = p1130
0000 h	19,20	40607: First parameter subindex = 0
1001 h	21,22	40608: Attribute, number of elements of the second parameter
71CA h	23,24	40609: Second parameter number = p29130
0000 h	25,26	40610: Second parameter subindex = 0
0801 h	27,28	40611: Format, number of values of the first parameter
3FA3 h	29,30	40612: First parameter value 1.28 (3FA3D70A h)
D70A h	31,32	40613: First parameter value
0301 h	33,34	40614: Format, number of values of the second parameter
0002 h	35,36	40615: Second parameter value 2

After the parameter values are written to the registers, the PLC sends a read request to the registers.

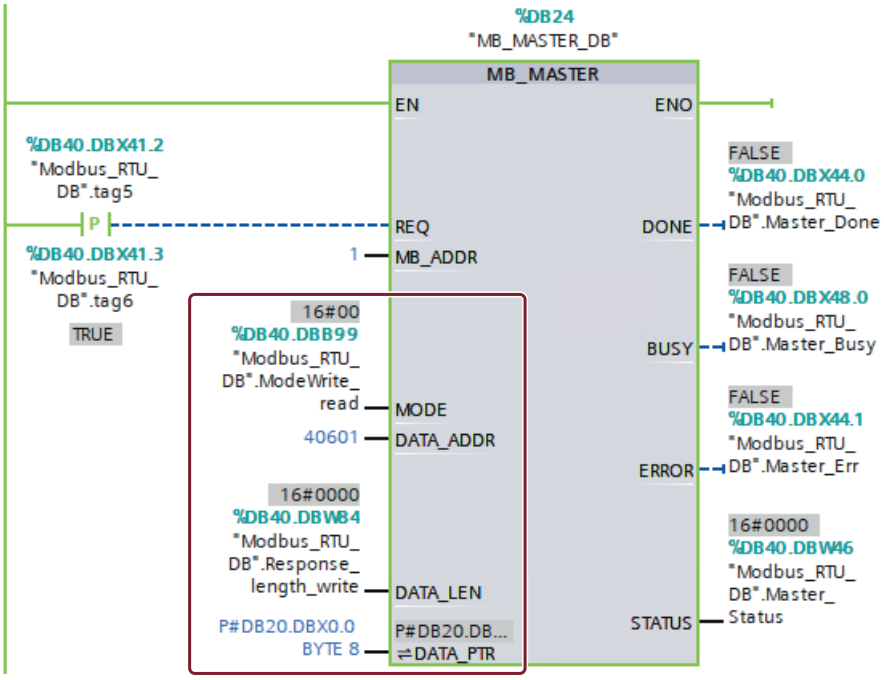

Figure 9-9 Read the values of p1130 and 29130 from DS47 registers

Depending on whether the write job is successful, the converter sends one of the following responses:

Table 9-38 Response for successful read operation

	Byte	Description
Header		
01 h 03 h 20 h	0 1 2	Server address Function code (read) Number of following data bytes (20 h: 32 bytes ≙ 16 registers)
User data		
0002 h 2F04 h 8002 h 0102 h	3,4 5,6 7,8 9,10	40601: DS47 Control = 2 (request was executed) 40602: Function code 2F h (47), response length 4 bytes 40603: Request reference mirrored = 80 h, response identifier = 2 (change parameter) 40604: S200 = 1 h, number of parameters = 2

Table 9-39 Response for unsuccessful write operation

	Byte	Description
Header		
01 h 03 h 20 h	0 1 2	Server address Function code (read) Number of following data bytes (20 h: 32 bytes ≙ 16 registers)

	Byte	Description
User data		
0001 h 2F00 h 0004 h	3,4 5,6 7,8	40601: DS47 Control = 1 (request is processed) 40602: Function 2F h (47), response length 0 (fault) 40603: Error code: 0004 Response Not Ready (response has still not been issued)

9.4.5.3 Error values for read and change requests

Overview

If the converter receives an erroneous request to read or change parameter values, the response from the converter will contain one or two error values. Error value 1 provides information about the type of faulty request.

Description of function

Table 9-40 Error value 1

Error value 1	Meaning
00 hex	**Illegal parameter number** (access to a parameter that does not exist)
01 hex	**Parameter value cannot be changed** (change request for a parameter value that cannot be changed)
02 hex	**Lower or upper value limit exceeded** (change request with a value outside the value limits)
03 hex	**Incorrect subindex** (access to a parameter index that does not exist)
04 hex	**No array** (access with a subindex to non-indexed parameters)
05 hex	**Incorrect data type** (change request with a value that does not match the data type of the parameter)
06 hex	**Setting not permitted, only resetting** (change request with a value not equal to 0 without permission)
07 hex	**Descriptive element cannot be changed** (change request to a descriptive element that cannot be changed)
09 hex	**Description data not available** (access to a description that does not exist, parameter value is available)
0B hex	**No master control** (change request but with no master control)
0F hex	**Text array does not exist** (although the parameter value is available, the request is made to a text array that does not exist)
11 hex	**Request cannot be executed due to the operating state** (access is not possible for temporary reasons that are not specified)
14 hex	**Inadmissible value** (change request with a value that is within the limits but which is illegal for other permanent reasons, i.e. a parameter with defined individual values)
15 hex	**Response too long** (the length of the actual response exceeds the maximum transfer length)
16 hex	**Illegal parameter address** (illegal or unsupported value for attribute, number of elements, parameter number, subindex or a combination of these)
17 hex	**Illegal format** (change request for an illegal or unsupported format)
18 hex	**Number of values not consistent** (number of values of the parameter data to not match the number of elements in the parameter address)
19 hex	**Drive object does not exist** (access to a drive object that does not exist)
20 hex	**Parameter text cannot be changed**
21 hex	**Service is not supported** (illegal or not support request ID).

Error value 1	Meaning
6B hex	**A change request for a controller that has been enabled is not possible**. (The converter rejects the change request because the motor is switched on. Observe the "Can be changed" parameter attribute in the parameter list.)
6C hex	**Unknown unit**
77 hex	**Change request is not possible during download.**
81 hex	**Change request is not possible during download.**
82 hex	**Accepting the master control is inhibited via BI: p0806**
83 hex	**Desired interconnection is not possible** (signal source does not supply float value, but the signal sink requires float)
84 hex	**Converter does not accept a change request** (converter is busy with internal calculations. See parameter r3996 in the parameter list.
85 hex	**No access methods defined**
87 hex	**Know-how protection active: access inhibited**
C8 hex	**Change request below the currently valid limit** (change request for a value that lies within the "absolute" limits, but is below the currently valid lower limit)
C9 hex	**Change request above the currently valid limit** (example: a parameter value is too large for the converter power)
CC hex	**Change request not permitted** (change is not permitted as the access code is not available)

9.5 General functions

9.5.1 Servo-on

Overview

The signal "servo-on" (SON) powers on the servo motor circuit and makes the servo drive system ready to operate (in "servo-on" state).

Description of function

⚠ WARNING

Unexpected movement through automatic servo-on

Automatic servo-on may result in unexpected motor movement which can cause damage to property, risk to persons, severe injury and death.

The SON signal is assigned to the digital input as default. In addition, you can force the SON signal to high via p29320.0:

- If p29320.0 = 1, SON always keeps at a high level.
- If p29320.0 = 0, SON is assigned to a digital input as default.

The servo-on behavior depends on the settings of parameter p29006.

- **p29006 = 0: Servo-on via SON rising edge (default)**
  After the servo drive system is powered on, it will go into "servo-on" state when it detects a SON rising edge without faults and go into "servo-off" state when it detects a SON falling edge without faults. When a fault occurs, the servo drive system will go into "servo-off" state and keeps at this state even if the fault is acknowledged, unless it detects another SON rising edge again.

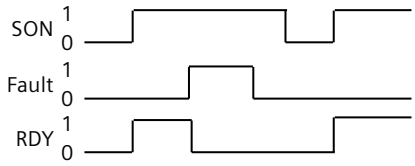

Figure 9-10 p29006 = 0

- **p29006 = 1: Servo-on via SON high-level at power-on and via SON rising edge after power-on**
  The servo drive system will go into "servo-on" state at power-on if the SON keeps at a high level. After the system is powered on, it will go into "servo-on" state when it detects a SON rising edge without faults and go into "servo-off" state when it detects a SON falling edge without faults. When a fault occurs, the servo drive system will go into "servo-off" state and keeps at this state even if the fault is acknowledged, unless it detects another SON rising edge again.

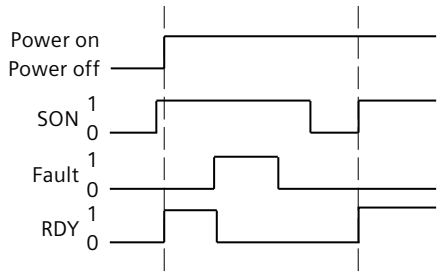

Figure 9-11 p29006 = 1

- **p29006 = 2: Servo-on via SON high-level**
  After the servo drive system is powered on, it will go into "servo-on" state only when the SON keeps at a high level without faults. When a fault occurs, the drive system will go into the "servo-off" state and after the fault is acknowledged, it will go into "servo-on" state automatically.

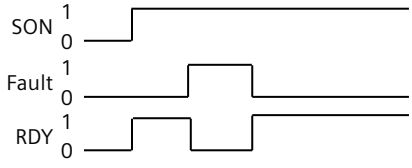

Figure 9-12 p29006 = 2

Parameters

The following list includes the parameters of the "Servo-on" function.

Number	Name	Unit

p29006	Servo-on mode selection
c29300	Servo-on
p29320.0...2	Signal forced

9.5.2 Over-travel

Overview

When the servo motor travels over the distance limit, the limit switch is turned on and then the servo motor has a quick stop.

Description of function

Signal CWL functions as the clockwise travel limit while the signal CCWL functions as the counter-clockwise travel limit. Both of them are level and edge sensitive signals.

Note

Make sure both signals CWL and CCWL are at a high level when the converter is powered on.

Table 9-41 CWL and CCWL signals overview

Signal type	Signal name	Setting	Description
DI	CWL	Falling edge (1 → 0)	The servo motor has travelled to the clockwise travel limit and has a quick stop after that.
DI	CCWL	Falling edge (1 → 0)	The servo motor has travelled to the counterclockwise travel limit and has a quick stop after that.

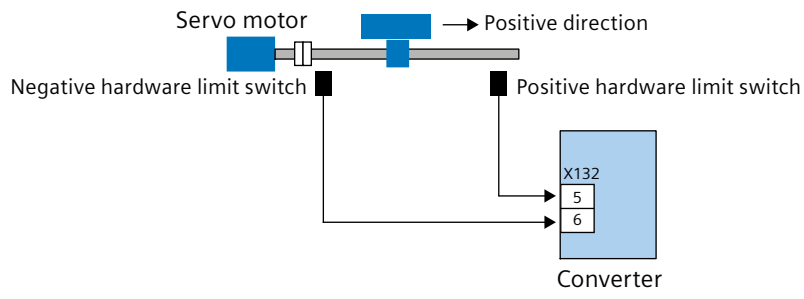

The CWL/CCWL signal can be assigned to the digital inputs and can also be set via the bit 1 and bit 2 of p29320. The default values of p29320.1 and p29320.2 are 0. You can force the CWL/CCWL signal to high by setting the values to 1:

- p29320.1 = 1, CWL always keeps at a high level.
- p29320.2 = 1, CCWL always keeps at a high level.

Note

When the signals CWL and CCWL are forced to high, no falling edge will be effective in this case.

You can change the message type of the over-travel signal (CWL/CCWL) via p29321:

- p29321 = 0 (default setting): The message type is parameterized as fault.
  When the servo drive system detects the falling edge of the CWL or CCWL signal, the corresponding fault (F52961 or F52960) is triggered and the motor stops immediately:
  - F52961 is triggered after the positive hardware limit switch is reached in the positive traversing direction.
  - F52960 is triggered after the negative hardware limit switch is reached in the negative traversing direction.

  You can acknowledge the fault using the RESET signal. The motor then rotates properly.
- p29321 = 1: The message type is parameterized as alarm.
  When the servo drive system detects the falling edge of the CWL or CCWL signal, the corresponding alarm (A52963 or A52962) is triggered.
  - In S mode or during changeover from Fast PTI or T mode to S mode (in compound control mode), the motor will not rotate in the positive traversing direction with the occurrence of A52963 or rotate in the negative traversing direction with the occurrence of A52962.
  - In Fast PTI or T mode, or during changeover between Fast PTI and T modes or changeover from S mode to Fast PTI or T mode (in compound control mode), the motor operation remains regardless of the occurrence of the alarm.

⚠ WARNING

Danger to life or malfunctions of the machine due to the motor travelling over the distance limit

When the fault F52961/F52960 occurs, the motor travels over the distance limit if you only acknowledge the fault without returning the axis to a position within the valid traversing range.

In S mode, when the alarm A52963/A52962 occurs, the motor travels over the distance limit if you do not return the axis to a position within the valid traversing range while signal CWL or CCWL becomes from a low level (logic 0) to a high level (logic 1).

- Return the axis to a position within the valid traversing range to prevent the motor from travelling over the distance limit. If the message type is parameterized as fault, acknowledge the fault first.

Parameters

The following list includes the parameters of the "Over-travel" function.

Number	Name	Unit
c29301	Clockwise over-travel limit	
c29302	Counterclockwise over-travel limit	
p29320.0...2	Signal forced	

p29321 Over-travel signal (CWL/CCWL) message type

9.5.3 Stopping methods at servo-off

Overview

You can select a stopping method when the converter is in "servo-off" state. The following stopping methods are available:

- Ramp-down (OFF1)
- Coast-down (OFF2)
- Quick stop (OFF3)

Description of function

Ramp-down (OFF1)

The ramp-down can be configured with the digital input signal SON in all control modes. When it is configured in T mode, the motor responds according to OFF2.

Table 9-42 SON signal

Signal type	Signal name	Pin assignment	Setting	Description
DI	SON	X132-7	Rising edge (0 → 1)	Power circuit is powered on and the servo drive system is ready to run.
			Falling edge (1 → 0)	Motor ramps down.

Coast-down (OFF2)

The coast-down can be configured with the digital input signal SON in T mode.

Table 9-43 SON signal

Signal type	Signal name	Pin assignment	Setting	Description
DI	SON	X132-7	Rising edge (0 → 1)	Power circuit is powered on and the servo drive system is ready to run.
			Falling edge (1 → 0)	Motor coasts down.

Quick stop (OFF3)

The quick stop can be configured with the digital input signal EMGS in all control modes.

Table 9-44 EMGS signal

Signal type	Signal name	Pin assignment	Setting	Description
DI	EMGS	X132-11	1	Servo drive system is ready to run.
			0	Quick stop.

9.5.4 Power failure detection (for S200 PTI only)

Overview

The converter provides the power failure detection function to avoid machine damage in case of the power failure.

Requirement

This function is only available for the converters with FS code ≥ 11.

Description of function

The converter is designed with the power failure detection function, and the function is activated by default. This function can be deactivated using parameter p2149.16.

When a power failure occurs, the converter detects the power failure within the delay time specified in p3234 and triggers the fault F30265, and then forces the motor to a quick stop (OFF3).

9.5.5 Vertical axis

9.5.5.1 Vertical axis

Requirement

The vertical axis function cannot be used in torque control mode.

Description of function

With a vertical axis without mechanical weight compensation, electronic weight compensation can be set by offsetting the torque limits (p1532). The torque limits specified in p1520 and p1521 are shifted by this offset value. The offset value can be read in r0031 and transferred in p1532.

To reduce compensation after a brake has been released, the torque offset can be interconnected as a supplementary torque setpoint. As a result, the holding torque is immediately specified after the brake is released.

Automatically configuring weight compensation

Siemens recommends that this function is used for vertical axes with an almost constant force due to weight. Start the automatic determination of the force due to weight using p1558 = 1. As soon as the technique has been started, the torque, which is required to hold the axis, is measured and entered into p1532. Further, interconnection between supplementary torque setpoint and p1532 is established for the precontrol, and the scaling of the precontrol channel is set to 100%.

The measurement can be started when the pulses are inhibited or the pulses are enabled (p1558 = 1). If the measurement was started with the pulses inhibited, it is only executed after the pulses have been enabled. In both cases, after starting, alarm A07991 (Drive: motor data identification activated) is output. The alarm is automatically withdrawn after the motor data identification routine has been successfully completed.

If the force due to weight is not constant: To prevent the axis from dropping after the brake is released, specify the torque offset as an additional torque setpoint (M_ADD) via the supplementary telegram 750. The supplementary telegram 750 must be configured in the PLC. As a result, the holding torque is specified when the brake is released.

Parameters

The following list includes the parameters of the "Vertical axis" function.

Number	Name	Unit
r0031	Actual torque smoothed	[Nm]
p1520[0]	Torque limit upper	[Nm]
p1521[0]	Torque limit lower	[Nm]
p1532[0]	Torque limit offset	[Nm]
p1558	Measure/precontrol hanging/suspended axis force due to weight	

9.5.5.2 Setting SS1 in conjunction with vertical axes

Requirement

The Safety Integrated Function "Safe Stop 1 with time control" (SS1-t) is enabled.

Description of function

With a vertical axis, if you use the Safety Integrated Function "Safe Stop 1 with time control" (SS1-t), then you must set p9556 as follows:

Table 9-45 SS1 setting

Parameter	Setting value	Description
p9556	p9556 > p1135 + p1228 + r1217	This setting prevents the vertical axis from sagging after the transition to STO.

Result

After the correct setting is made, SS1-t behaves as follows:

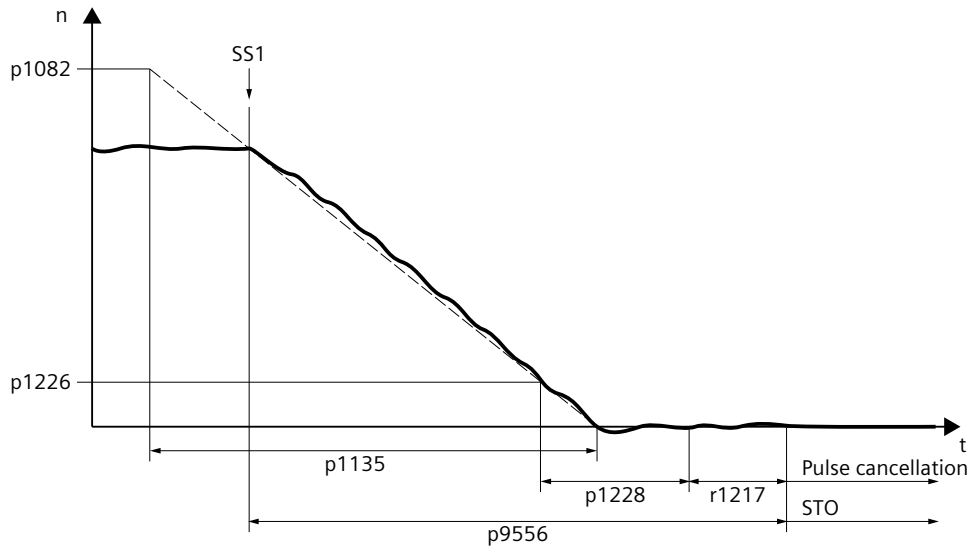

Figure 9-13 Correct setting of p9556 for SS1-t

- By immediately specifying n_set = 0, the converter brakes along the OFF3 down ramp (p1135).
- Once standstill has been detected, the converter closes the motor holding brake.
  The converter detects standstill in the following cases:
  - If the speed actual value falls below the speed threshold (p1226).
  - When the monitoring time (p1227), which was started when the speed setpoint ≤ speed threshold (p1226), has expired.
- At the end of the holding brake closing time (r1217), the converter cuts off the motor torque (pulse cancellation).
- The converter is in the "switching on inhibited" state.

Parameters

The following list includes the parameters to set SS1-t in conjunction with a vertical axis.

Number	Name	Unit
p1135[0]	OFF3 ramp-down time	[s]
p1217[0]	Motor holding brake closing time	[ms]
p1226[0]	Threshold for standstill detection	[rpm]
p1227[0]	Standstill detection monitoring time	[s]
p1228[0]	Pulse cancellation delay time	[s]
p9556	SI transition time SS1 to STO	[ms]

9.5.6 PTO function

Overview

Pulse Train Output is a simple and universal interface between a SIMATIC control and a SINAMICS drive. PTO is supported worldwide by many stepper drives and servo drives and is used in many positioning applications, for example, for adjusting or feed axes.

A pulse train encoder output which provides pulse signals can transmit the signals to the controller to realize a closed-loop control system inside the controller, or transmit them to another drive as pulse train setpoint for a synchronous axis or as control interface of another device (for example, a line scan camera).

Description of function

Output configuration

PTO is referred to as AB track pulse.

- **PTO direction output**
  You can define whether the PTO position actual value should be inverted via p4422:
  - Positive logic (= not inverted, default setting)
  - Negative logic (= inverted)
- **Maximum output frequency**
  The maximum output frequency represents the maximum output frequency supported by the converter. You can set the maximum output frequency of the pulse train output via p4405.

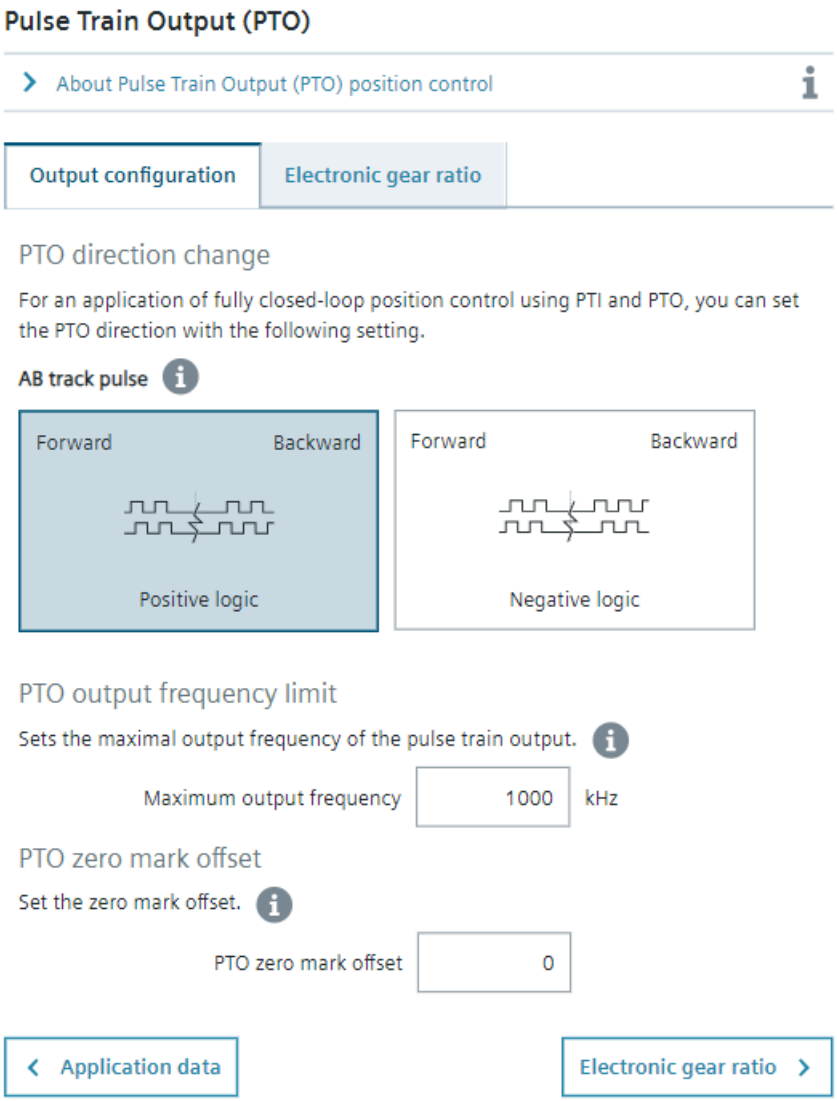

Figure 9-14 PTO output configuration

Electronic gear ratio

The electronic gear ratio is a multiplier factor to the pulse train output to a controller.

You can select one of the following two values to define the electronic gear ratio:

- Number of PTO pulses per motor revolution (p4408).

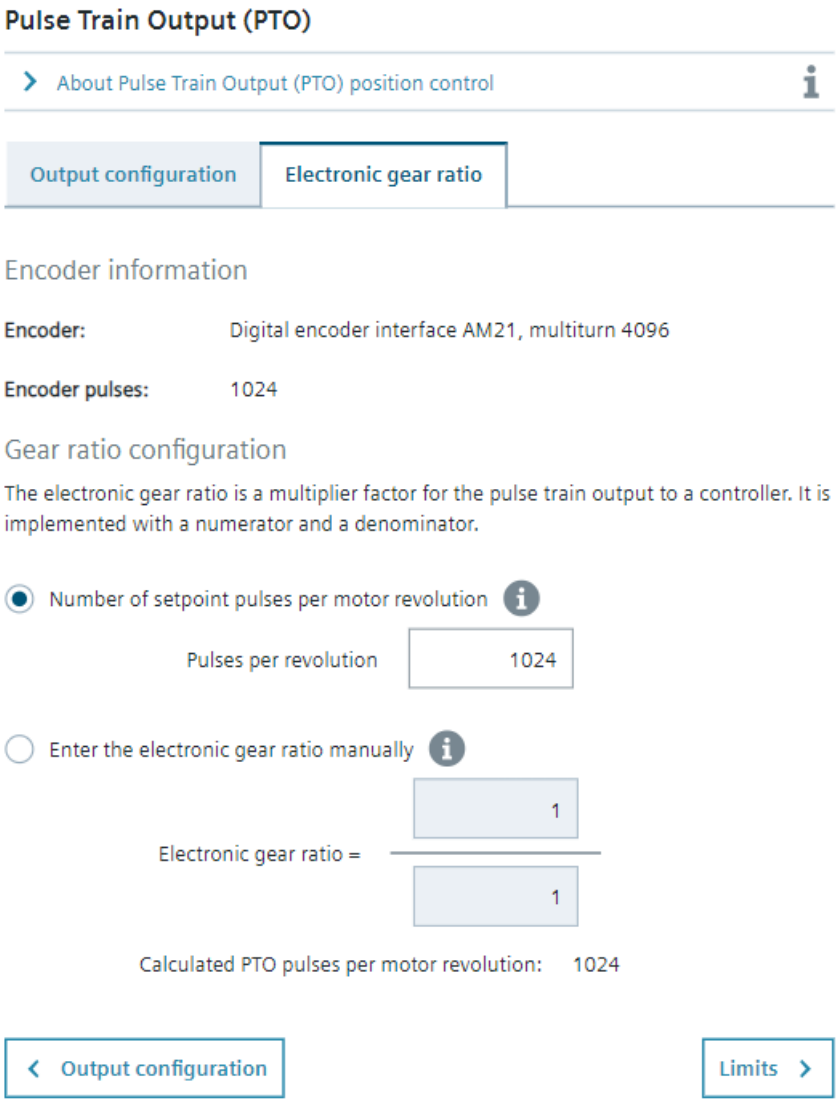

- Gear ratio by using a numerator (p4410) and a denominator (p4409).

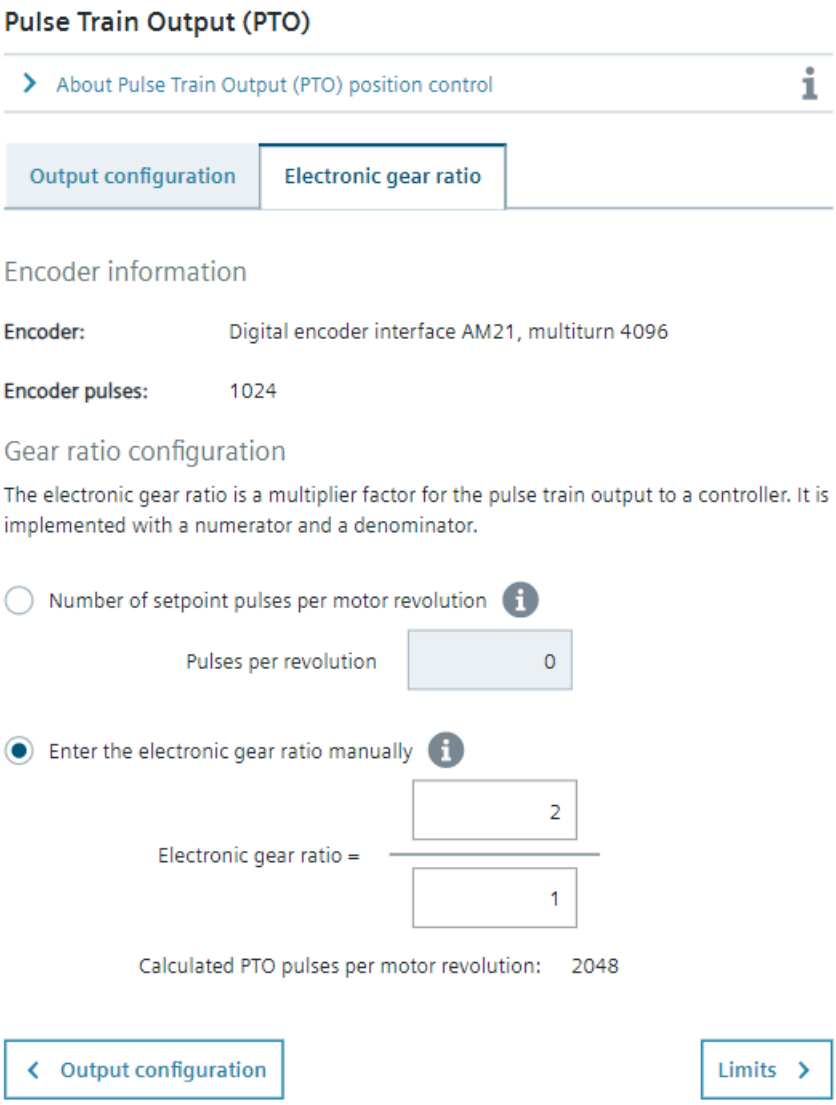

Note

When you use the numerator and the denominator to define the electronic gear ratio, the number of PTO pulses per motor revolution (p4408) must be set to 0. Otherwise, no electronic gear ratio is active.

Note

When you use the PTO electronic gear function, the electronic gear is based on the encoder resolution. The encoder resolution can be read from parameter p0408[0] and the default value is 1024 ppr.

The range of electronic gear ratio is from 0.02 to 8000.

The electronic gear ratio can be set at servo-off state only.

Note

When you use the PTO electronic gear function, if the product of the PTO setpoint pulses per motor revolution multiplied by the electronic gear ratio is not an integer, there is no zero mark generated.

Example

Calculating the PTO output frequency by using different electronic gear ratio configuration when the motor speed is 600 r/min:

- p4408 ≠ 0: by using number of PTO pulses per motor revolution
  Set p4408 = 4096, then PTO output frequency = (600/60) x 4096.
- p4408 = 0: by using a numerator (p4410) and a denominator (p4409)
  Set p4410 = 2, p4409 = 1 and read the encoder pulse 1024 from p0408[0], then PTO output frequency = (600/60) x 1024 x (2/1).

Parameters

The following list includes the parameters of the "PTO" function.

Number	Name	Unit
p0408[0]	Rotary encoder pulse number	
p4405	PTO maximum output frequency	[kHz]
p4408	PTO pulse number	
p4409	Gearbox encoder (motor)/PTO denominator (Control Unit)	
p4410	Gearbox encoder (motor)/PTO numerator (Control Unit)	
r4419	PTO diagnostics position setpoint	
c4420	PTO position setpoint	
p4422.0	PTO configuration	
p4426	PTO zero mark offset	

9.5.7 Setting motor overload protection in accordance with UL 61800-5-1 Ed.2

Overview

The motor overload protection function works without temperature sensors in the 1FL2 motors.

To comply with UL 61800-5-1 Ed.2, you must make some additional settings when operating the converter with a 1FL2 motor.

Requirement

- You have completed quick commissioning with the correct motor data.

Procedure

Proceed as follows to activate the motor overload protection according to UL 61800-5-1 Ed.2:

1. Set p5375.0 = 1
2. Set p5375.1 = 1

9.6 Fast position control with pulse train input (Fast PTI)

9.6.1 Sequence of SON

Overview

Observe the correct sequence to servo-on the converter smoothly.

Description of function

When the converter operates in the fast pulse train input position control mode (Fast PTI), the pulse train setpoint must be sent out after the RDY signal is at high level.

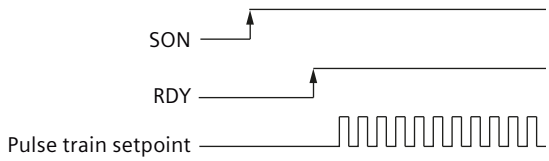

9.6.2 Selecting a setpoint pulse train input channel

Overview

The converter supports two channels for the setpoint pulse train input:

- 24 V single end pulse train input
- High-speed 5 V differential pulse train input (RS485)

Description of function

You can select one of the two channels. The position pulse train inputs come from either of the following two terminal groups.

Table 9-46 Two terminal groups

Group 1 (high-speed 5 V differential)		Group 2 (24 V single end)	
Signal name	**Pin assignment**	**Signal name**	**Pin assignment**
PTIA_D+	X132-1	PTIA_24P	X132-36
PTIA_D-	X132-2	PTIA_24M	X132-37
PTIB_D+	X132-26	PTIB_24P	X132-38
PTIB_D-	X132-27	PTIB_24M	X132-39

The maximum input pulse frequency for the 24 V single end pulse train input channel is 200 kHz.

The maximum input pulse frequency for the high-speed 5 V differential pulse train input (RS485) channel is 4 MHz. The channel supports wire-break detection for input pulse frequency up to 1 MHz. When the converter detects a disconnection in the wire, it outputs fault F07217.

For the high-frequency input signal (> 200 kHz), Siemens recommends that you set the filter time for the pulse train input signals (p0438) to 0.04 us.

9.6.3 Selecting a setpoint pulse train input form

Overview

The converter supports three kinds of setpoint pulse train input forms:

- AB phase pulse
- CW + CCW pulse
- Pulse + Direction

The available pulse train input form depends on the connected controller.

Description of function

For all the three forms, positive logic and negative logic are supported. You can select the desired form during in the commissioning tool.

Table 9-47 Three kinds of setpoint pulse train input forms

Pulse train input form	Positive logic = 0	Negative logic = 1
AB phase pulse	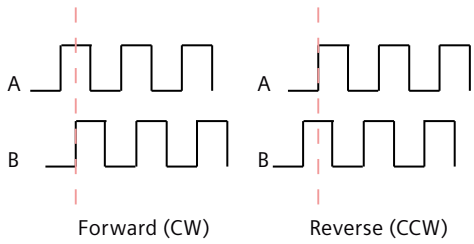	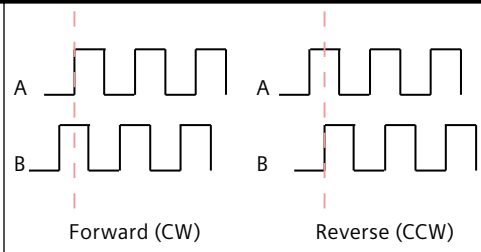
CW + CCW pulse	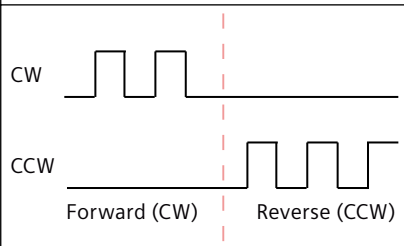	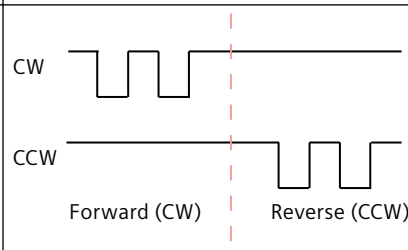
Pulse + Direction	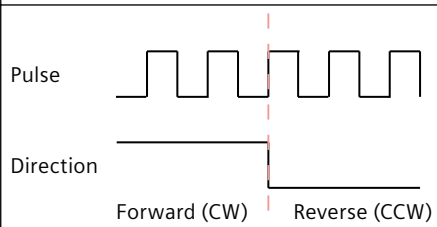	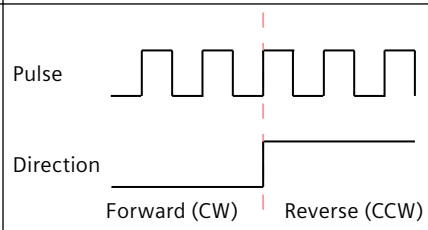

9.6.4 Position monitoring function

Overview

The position monitoring function monitors the deviation of the position setpoint and the actual position. It includes the in-position state monitoring and the following error monitoring.

Description of function

In-position monitoring

The in-position state is monitored by the position setpoint, the actual position, and the motor speed. There are three modes available for in-position state monitoring via p29290. When

the deviation between the position setpoint and the actual position fulfills all the conditions specified in your selected mode, the signal INP (in-position) is output.

- **p29290 = 0: with the deviation of the actual position**
  Condition: the deviation of position is within the in-position window range (p29291).

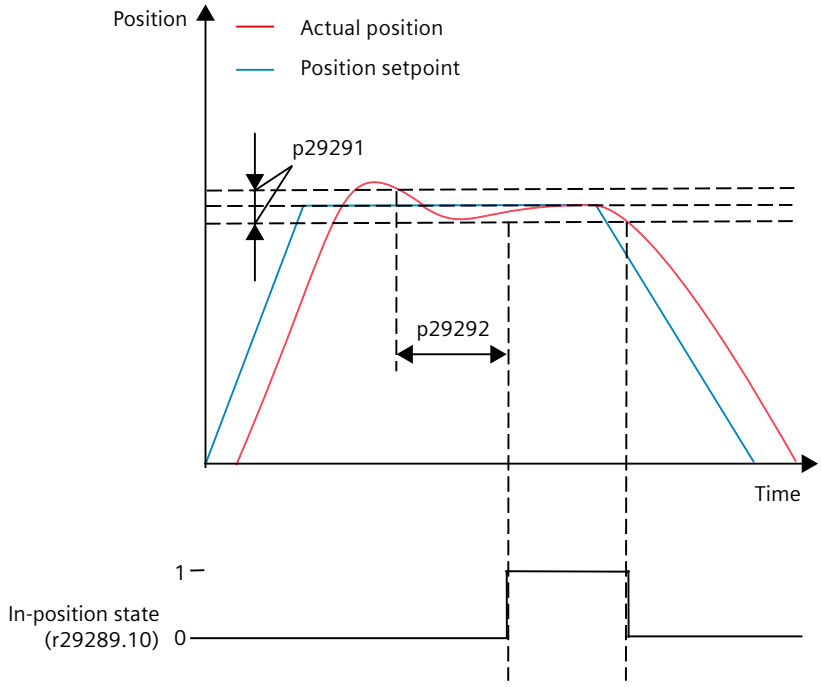

① Actual position
② Position setpoint

- **p29290 = 1: with the deviation of the actual position and the position setpoint**
  Condition: the deviation of position is within the in-position window range (p29291) and no new position setpoint is active.

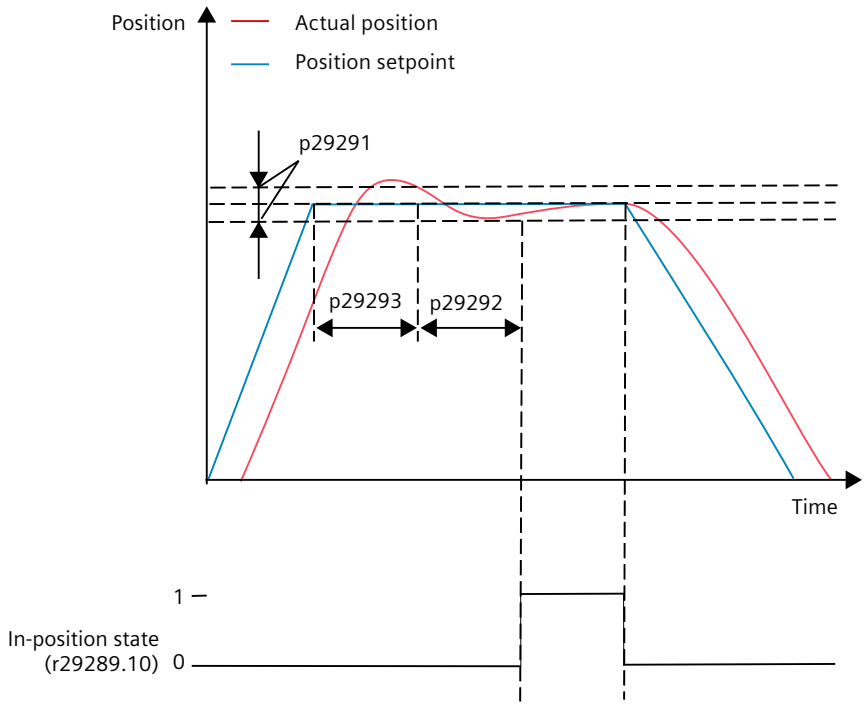

① Actual position
② Position setpoint

- **p29290 = 2: with the deviation of the actual position, the position setpoint, and the actual speed**
  Condition: the deviation of position is within the in-position window range (p29291); no new position setpoint is active; and the actual motor speed is almost zero.

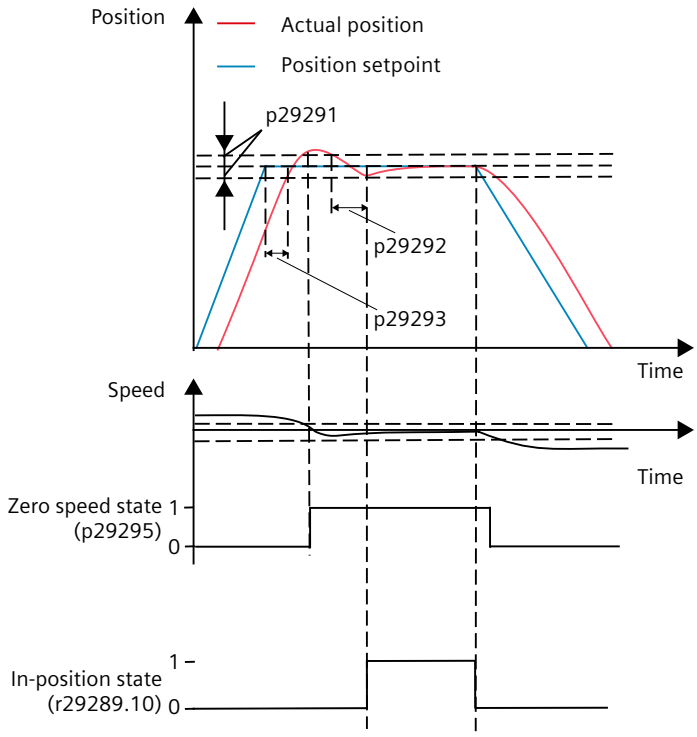

① Actual position
② Position setpoint

Following error monitoring

The following error monitoring is activated when the following error monitoring threshold (p29294) is not 0. When the absolute value of the deviation between the position setpoint and the actual position is greater than p29294, fault F52940 is output and bit r29289.8 is reset immediately.

Parameters

The following list includes the parameters of the "Position monitoring" function.

Number	Name	Unit
r29289.0...15	Pulse setpoint status word	
p29290	In-position monitoring mode	
p29291	In-position window range	
p29292	In-position monitoring time	[ms]
p29293	New setpoint monitoring time	[ms]
p29294	Following error monitoring threshold	

9.6.5 Smoothing function

Overview

Smoothing function is used to filter the position commands to make the servo motor rotate more smoothly. With the smoothing function, the position characteristics curve from the pulse train input setpoint can be transformed into an S-curve profile with a time constant.

Description of function

The converter supports three filters (two moving averaging filters and one low pass filter PT1) to fulfill different smoothing purposes. The moving averaging filters are usually used to smooth the high step position commands and the acceleration or deceleration limit, while the PT1 filter is used to smooth the high frequency noise.

Smoothing should be considered in the following situations:

- Low pulse frequency and high electronic gear ratio
- No acceleration/deceleration processing in the high-level controller
- High frequency noise

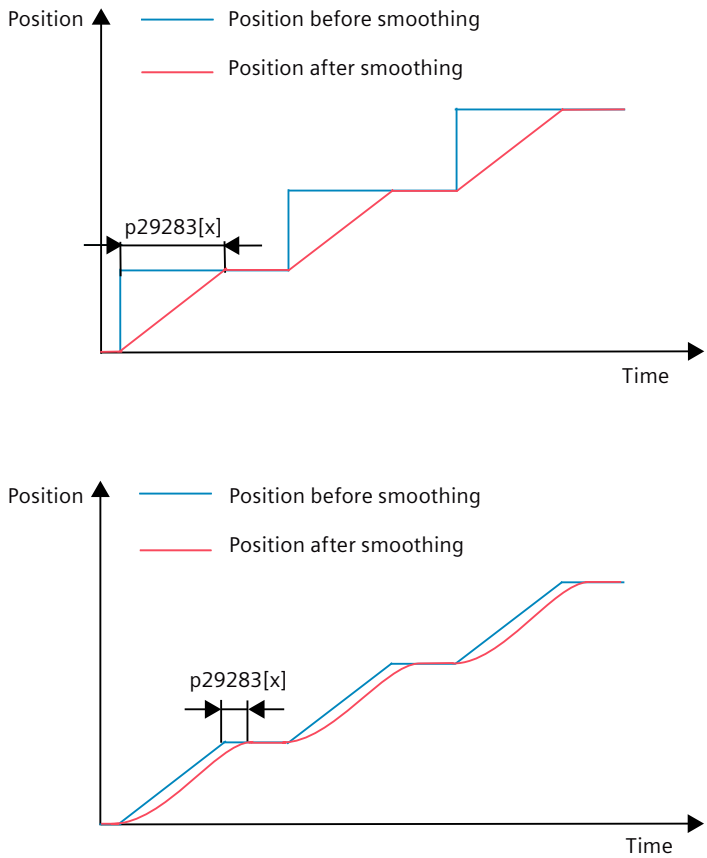

Figure 9-15 Smoothing with moving average filter

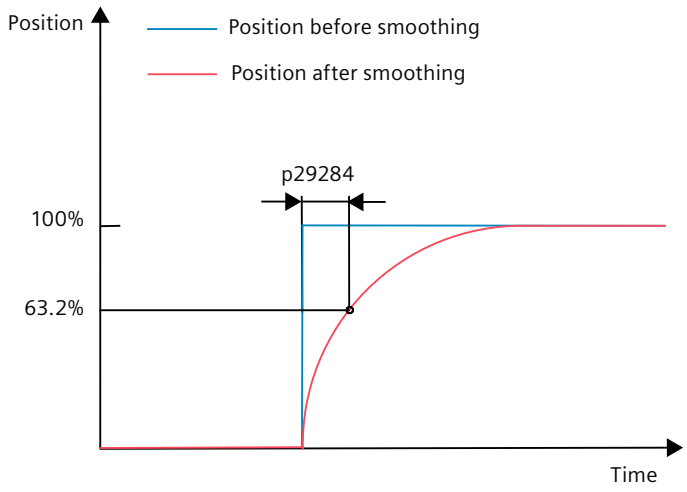

Figure 9-16 Smoothing with PT1 filter

Parameters

The following list includes the parameters of the "Smoothing" function.

Number	Name	Unit
p29283[0...1]	Pulse setpoint moving average time	[ms]
p29284	Pulse setpoint PT1 filter time constant	[ms]

9.6.6 Electronic gear ratio

Overview

With the function of electronic gear, you can define the motor revolutions according to the number of setpoint pulses, and sequentially define the distance of mechanical movement. The minimum traveling distance of load shaft corresponding to one setpoint pulse is called a length unit (LU); for example, one pulse results in 1 µm movement.

Description of function

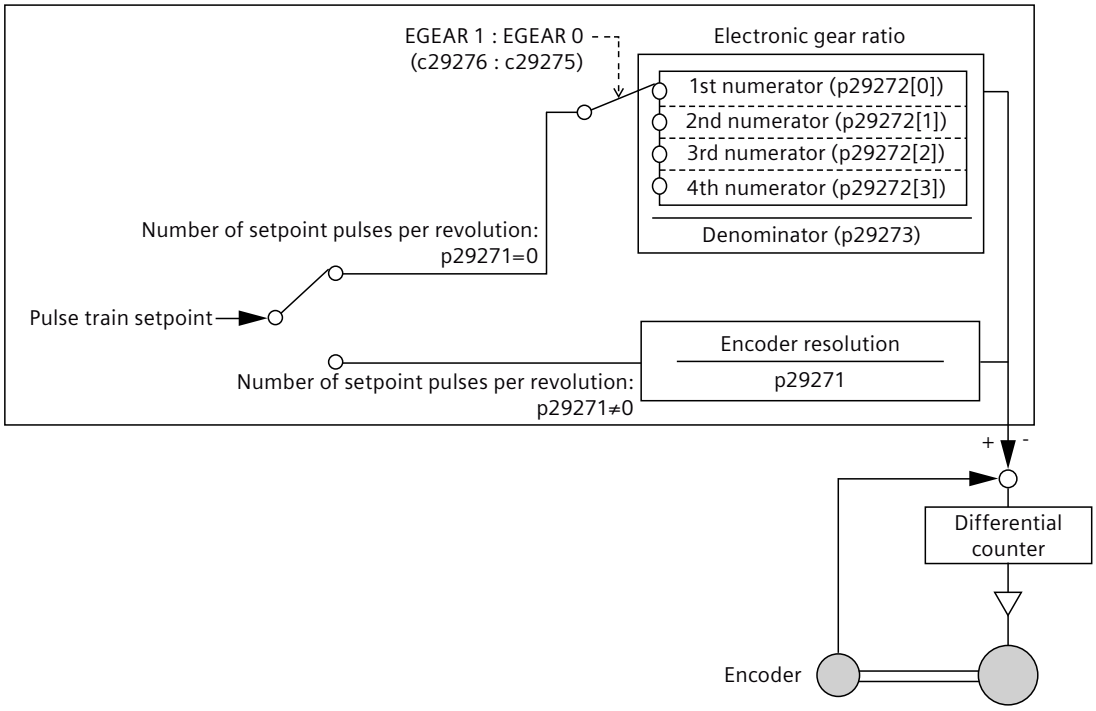

The electronic gear ratio is a multiplier factor to pulse train setpoint. It is realized with a numerator and a denominator. Four numerators (p29272[0], p29272[1], p29272[2], p29272[3]) and one denominator (p29273) are used for the four electronic gear ratios. These four electronic gear ratios can be selected with the combination of the digital input signals EGEAR0 and EGEAR1.

Table 9-48 Combination of electronic gear ratio and EGEAR0 and EGEAR1 signals

EGEAR1 : EGEAR0	Electronic gear ratio	Ratio value
0 : 0	Electronic gear ratio 1	p29272[0] : p29273
0 : 1	Electronic gear ratio 2	p29272[1] : p29273
1 : 0	Electronic gear ratio 3	p29272[2] : p29273
1 : 1	Electronic gear ratio 4	p29272[3] : p29273

Note

The range of the electronic gear ratio is from 0.001 to 64000.

The electronic gear ratio can be set either at servo-off state or at servo-on state.

- When setting at servo-on state, the pulse train input signal may be lost by the differential counter during the electronic gear ratio changing.

Example

Calculation formula for the electronic gear ratio

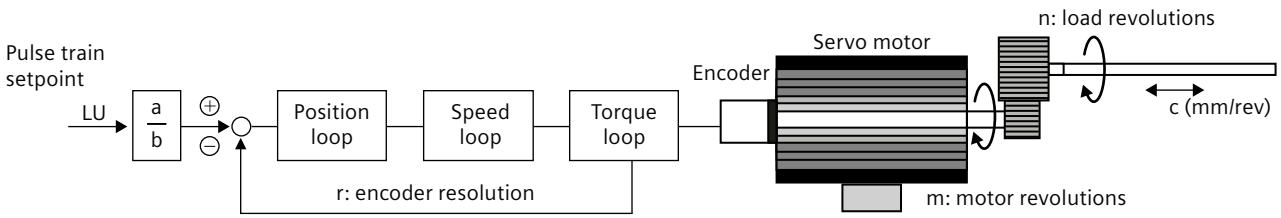

$\frac{a}{b} = \frac{p29272}{p29273}$: electronic gear ratio

c : pitch of ball screw

$\frac{m}{n}$: reduction gear ratio

$$\text{Electronic gear ratio} = \frac{\text{Encoder pulses per revolution}}{\text{Travel distance per load shaft revolution}} \cdot \text{Reduction gear ratio}$$

$$\Rightarrow \frac{a}{b} = \frac{r\,LU}{c} \cdot \frac{m}{n}$$

Table 9-49 Examples for calculating the electronic gear ratio

Step	Description	Mechanism	
		Ball screw	Disc table
		LU: 1 µm 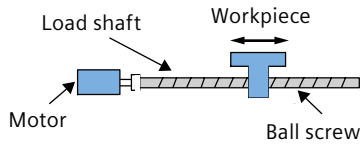	LU: 0.01° 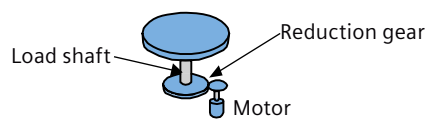
1	Identify mechanism	• Pitch of ball screw: 8 mm • Reduction gear ratio: 1 : 1	• Rotary angle: 360° • Reduction gear ratio: 3 : 1
2	Identify the encoder resolution (r)	21-bit	21-bit
3	Define LU	1 LU = 1 µm	1 LU = 0.01°
4	Calculate the travel distance per load shaft revolution	8/0.001 = 8000 LU	360°/0.01° = 36000 LU
5	Calculate the electronic gear ratio	$(2^{21}/8000) \times (1/1) = 2^{21}/8000 = 32768/125$	$(2^{21}/36000) \times (3/1) = 2^{21}/12000 = 131072/75$

Parameters

The following list includes the parameters of the "Electronic gear ratio" function.

Number	Name	Unit
p29271	Number of setpoint pulses per revolution	
p29272[0...3]	Numerator of electronic gear	
p29273	Denominator of electronic gear	
c29275	Electronic gear selection bit 0	
c29276	Electronic gear selection bit 1	

9.6.7 Inhibiting pulse train input setpoint (P-TRG)

Overview

The digital input signal P-TRG is the default connection of DI5 in the position control mode.

Description of function

In the fast position control with pulse train input control mode (Fast PTI), P-TRG is level sensitive and can be used to allow or inhibit positioning operation according to the pulse train input setpoint:

- 0: positioning according to the pulse train input setpoint
- 1: inhibit the pulse train input setpoint

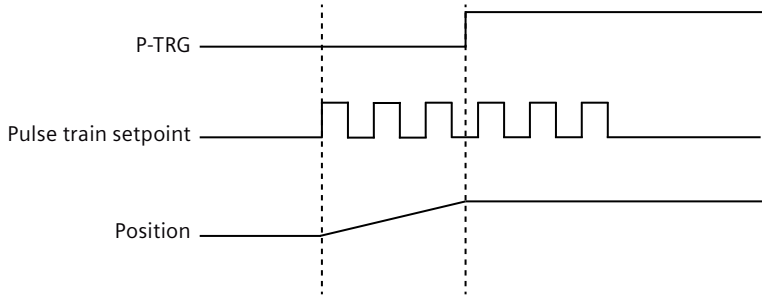

Figure 9-17 Timing diagram

Table 9-50 P-TRG signal

Signal type	Signal name	Setting	Description
DI	P-TRG	1 (high level)	Inhibit the pulse train input setpoint
		0 (low level)	Positioning according to the pulse train input setpoint

9.6.8 Clearing droop pulses (CLR)

Overview

The droop pulses can be cleared with the parameter p29266 and the digital input signal CLR.

Description of function

The droop pulse clearing is executed depending on the clearing mode selected via p29266.

- **p29266 = 0: Clear droop pulses before enabling servo-on signal**

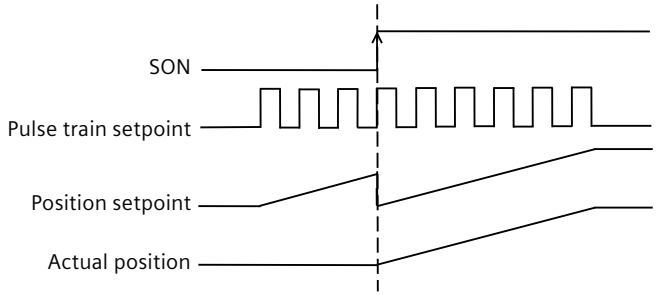

- **p29266 = 1: Clear droop pulses before enabling servo-on signal or with the CLR high level**

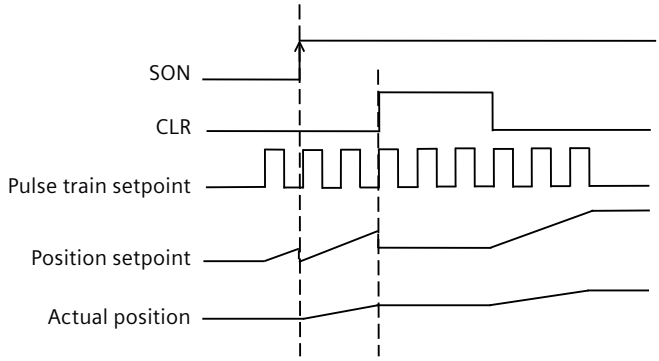

- **p29266 = 2: Clear droop pulses before enabling servo-on signal or with the CLR rising edge**

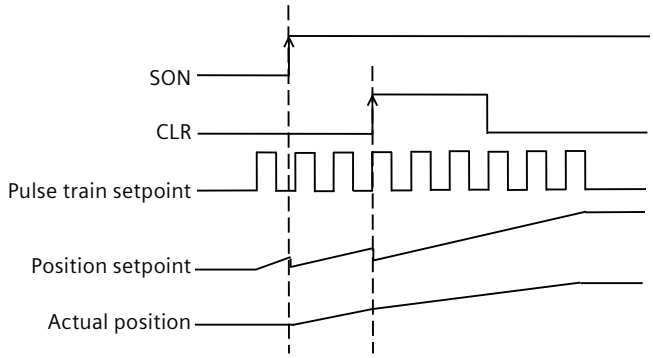

Parameters

The following list includes the parameters of the "Clearing droop pulses (CLR)" function.

Number	Name	Unit
p29266	Droop pulse clearing mode selection	
c29267	Clear droop pulses	

9.6.9 Speed limit

Overview

The following four sources are available for the speed limit in all control modes. You can select one of them via a combination of digital input signals SLIM0 and SLIM1 and switch among them when the converter is running.

Table 9-51 Combinations of SLIM0 and SLIM1 signals

Digital input		Speed limit
SLIM1	**SLIM0**	
0	0	Internal speed limit 0
0	1	Internal speed limit 1
1	0	Internal speed limit 2
1	1	Internal speed limit 3

In addition to the above four sources, the overall speed limit is also valid.

Note

Fault F07901 occurs when the actual speed exceeds the positive speed limit + hysteresis speed (p2162) or the negative speed limit - hysteresis speed (p2162).

Description of function

Internal speed limit

Select an internal speed limit by setting the following parameters. The default parameter value depends on the maximum motor speed.

Table 9-52 Parameter - internal speed limit

Parameter	Value range	Default	Unit	Description	Digital input	
					SLIM1	**SLIM0**
p29070[0]	0 ... 210000	210000	r/min	Internal speed limit 0 (positive)	0	0
p29070[1]	0 ... 210000	210000	r/min	Internal speed limit 1 (positive)	0	1
p29070[2]	0 ... 210000	210000	r/min	Internal speed limit 2 (positive)	1	0
p29070[3]	0 ... 210000	210000	r/min	Internal speed limit 3 (positive)	1	1
p29071[0]	-210000 ... 0	-210000	r/min	Internal speed limit 0 (negative)	0	0
p29071[1]	-210000 ... 0	-210000	r/min	Internal speed limit 1 (negative)	0	1
p29071[2]	-210000 ... 0	-210000	r/min	Internal speed limit 2 (negative)	1	0
p29071[3]	-210000 ... 0	-210000	r/min	Internal speed limit 3 (negative)	1	1

Note

Analog speed limit for S200 PTI

For S200 PTI, when the signal SLM1-SLM0 status is 0-1, p29070[1] is invalid and the analog voltage from the analog input 0 is used as the speed limit.

The analog voltage from the analog input 0 corresponds to an internal percentage value. Default speed value is the rated motor speed. The analog voltage of 10 V corresponds to the maximum speed setpoint (V_max) and this maximum speed setpoint can be specified by parameter p2000.

Overall speed limit

The overall speed limit can be configured by setting the following parameters.

Table 9-53 Parameter - overall speed limit

Parameter	Value range	Default	Unit	Description
p1083	0 ... 210000	210000	r/min	Overall speed limit for positive direction
p1086	-210000 ... 0	-210000	r/min	Overall speed limit for negative direction

Note

After the motor is commissioned, the internal speed limit and the overall speed limit are set to the maximum speed of the motor automatically.

Parameters

The following list includes the parameters of the "Speed limit" function.

Number	Name	Unit
p1083[0]	Speed limit in positive direction of rotation	[rpm]
p1086[0]	Speed limit in negative direction of rotation	[rpm]
p2000	Reference speed	[rpm]
p2162[0]	Hysteresis speed n_act > n_max	[rpm]
p29070[0...3]	Speed limit in positive direction of rotation	[rpm]
p29071[0...3]	Speed limit in negative direction of rotation	[rpm]

9.6.10 Torque limit

Overview

The following four sources are available for the torque limit in all control modes. You can select one of them via a combination of digital input signals TLIM0 and TLIM1 and switch among them when the converter is running.

Table 9-54 Combinations of TLIM0 and TLIM1 signals

Digital input		Torque limit
TLIM1	**TLIM0**	
0	0	Internal torque limit 0
0	1	Internal torque limit 1
1	0	Internal torque limit 2
1	1	Internal torque limit 3

In addition to the above four sources, the overall torque limit is also valid.

Note

When the motor torque exceeds the torque limit of the selected group determined by TLIM0 and TLIM1, fault F07900 occurs.

Description of function

Internal torque limit

Select an internal torque limit by setting the following parameters.

Table 9-55 Parameter - internal torque limit

Parameter	Value range	Default	Unit	Description	Digital input	
					TLIM1	**TLIM0**
p29050[0]	-150 ... 350	350	%	Internal torque limit 0 (upper)	0	0
p29050[1]	-150 ... 350	350	%	Internal torque limit 1 (upper)	0	1
p29050[2]	-150 ... 350	350	%	Internal torque limit 2 (upper)	1	0
p29050[3]	-150 ... 350	350	%	Internal torque limit 3 (upper)	1	1
p29051[0]	-350 ... 150	-350	%	Internal torque limit 0 (lower)	0	0
p29051[1]	-350 ... 150	-350	%	Internal torque limit 1 (lower)	0	1
p29051[2]	-350 ... 150	-350	%	Internal torque limit 2 (lower)	1	0
p29051[3]	-350 ... 150	-350	%	Internal torque limit 3 (lower)	1	1

Note

Analog torque limit for S200 PTI

For S200 PTI, when the signal TLM1-TLM0 status is 0-1, p29050[1] is invalid and the analog voltage from the analog input 1 is used as the torque limit.

The analog voltage from the analog input 1 corresponds to an internal percentage value. Default torque value is the rated motor torque (r0312). The analog voltage of 10 V corresponds to the rated motor torque.

The following diagram shows how the internal torque limit functions. When the torque setpoint reaches the torque limit, the actual torque output is limited to the value selected by TLIM0/TLIM1.

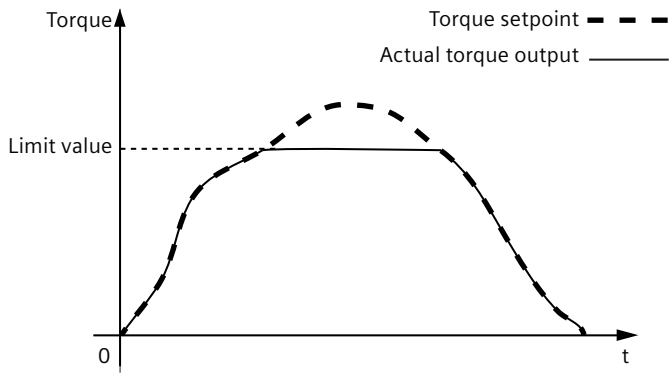

Overall torque limit

The overall torque limit takes effect when a quick stop (OFF3) happens. In this case, the servo drive brakes with a maximum torque.

Table 9-56 Parameter - overall torque limit

Parameter	Value range	Default	Unit	Description
p1520	-1000000.00 ... 20000000.00	0	Nm	Overall torque limit (upper)
p1521	-20000000.00 ... 1000000.00	0	Nm	Overall torque limit (lower)

Torque limit reached (TLR)

When the generated torque has nearly (internal hysteresis) reached the value of the upper torque limit, lower torque limit or analog torque limit, the signal TLR is output.

Parameters

The following list includes the parameters of the "Torque limit" function.

Number	Name	Unit
p0312[0]	Rated motor torque	[Nm]
p1520[0]	Torque limit upper	[Nm]
p1521[0]	Torque limit lower	[Nm]

p29050[0...3]	Upper torque limit	[%]
p29051[0...3]	Lower torque limit	[%]

9.6.11 Torque overload monitoring

Overview

The torque overload monitoring function monitors the status of the output torque.

Description of function

The overload threshold for the output torque can be set with the parameter p29054. The torque overload level window is calculated by p29054 * p0312. When the output torque exceeds the overload reached level, the signal OLL (overload level reached) is output.

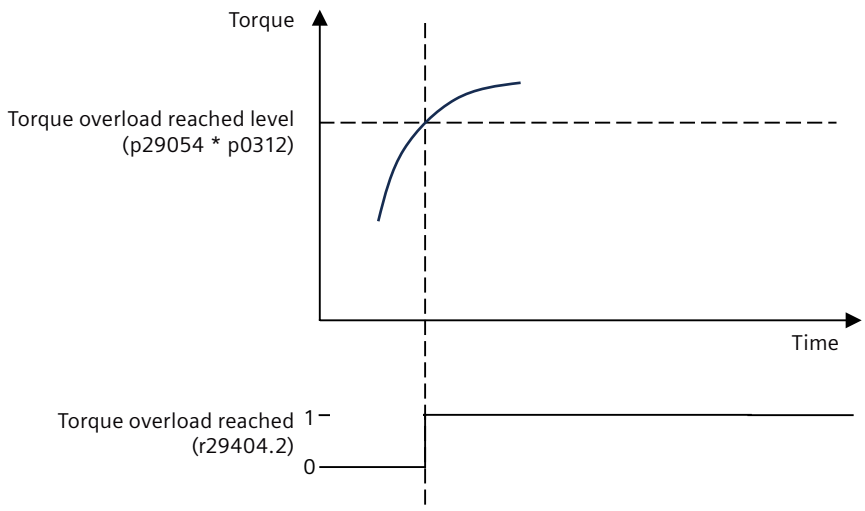

Figure 9-18 Torque overload monitoring

Parameters

The following list includes the parameters of the "Torque overload monitoring" function.

Number	Name	Unit
p0312[0]	Rated motor torque	[Nm]
p29054	Overload threshold for output signal triggering	[%]
r29404.0...5	DO status word	

9.7 Speed control (S) (for S200 PTI only)

9.7.1 Speed setpoint

Overview

Eight sources in total are available for the speed setpoint. You can select one of them with the combination of digital input signals SPD0, SPD1 and SPD2:

Table 9-57 Speed setpoint source overview

Digital signal			Speed setpoint
SPD2	SPD1	SPD0	
0	0	0	Analog speed setpoint (analog input 0)*
0	0	1	Fixed speed setpoint 1
0	1	0	Fixed speed setpoint 2
0	1	1	Fixed speed setpoint 3
1	0	0	Fixed speed setpoint 4
1	0	1	Fixed speed setpoint 5
1	1	0	Fixed speed setpoint 6
1	1	1	Fixed speed setpoint 7

* Default speed setpoint source

Description of function

Speed control with analog speed setpoint

In the S mode, when the digital input signals SPD0, SPD1 and SPD2 are all at low level (0), analog voltage from the analog input 0 is used as the speed setpoint.

The analog voltage from the analog input 0 corresponds to an internal percentage value. Default speed value is the rated motor speed. The analog voltage of 10 V corresponds to the maximum speed setpoint (V_max) and this maximum speed setpoint can be specified by parameter p2000.

The relationship between the analog voltage and the speed setpoint is shown as follows:

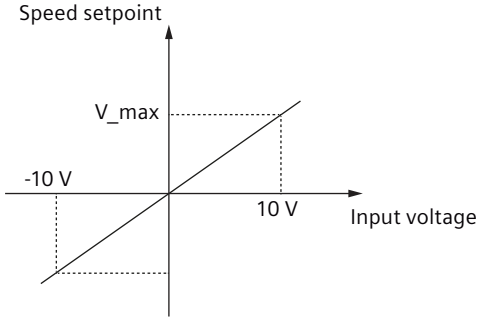

Note

When the converter is working with external analog speed setpoint, the system continues to work automatically after you repower on the 24 V DC power supply which was unexpectedly shut off for the converter. In this case, do not touch the equipment.

Speed control with fixed speed setpoint

In the S mode, when at least one of the three digital input signals SPD0, SPD1 and SPD2 is at high level, one of the following parameter values is used as the speed setpoint.

Table 9-58 Fixed speed setpoint overview

Parameter	Speed setpoint	Digital signal		
		SPD2	SPD1	SPD0
p1001	Fixed speed setpoint 1	0	0	1
p1002	Fixed speed setpoint 2	0	1	0
p1003	Fixed speed setpoint 3	0	1	1
p1004	Fixed speed setpoint 4	1	0	0
p1005	Fixed speed setpoint 5	1	0	1
p1006	Fixed speed setpoint 6	1	1	0
p1007	Fixed speed setpoint 7	1	1	1

Parameters

The following list includes the parameters of the "Speed setpoint" function.

Number	Name	Unit
p1001[0]	Fixed speed setpoint 1	[rpm]
p1002[0]	Fixed speed setpoint 2	[rpm]
p1003[0]	Fixed speed setpoint 3	[rpm]
p1004[0]	Fixed speed setpoint 4	[rpm]
p1005[0]	Fixed speed setpoint 5	[rpm]
p1006[0]	Fixed speed setpoint 6	[rpm]
p1007[0]	Fixed speed setpoint 7	[rpm]
p2000	Reference speed	[rpm]

9.7.2 Direction and stop

Overview

Two digital input signals are used to control motor direction and run/stop:

- CWE: enable clockwise rotations
- CCWE: enable counterclockwise rotations

Description of function

The following table shows you the details:

Signal		Fixed torque set-point	Analog torque setpoint		
CCWE	CWE		+ polarity	- polarity	0 V
0	0	0	0	0	0
0	1	CW	CW	CCW	0
1	0	CCW	CCW	CW	0
1	1	0	0	0	0

Note

In S mode or T mode, when the servo motor is ready to run, signal CWE or CCWE is a must to start running the motor.

9.7.3 Speed limit

Overview

The following four sources are available for the speed limit in all control modes. You can select one of them via a combination of digital input signals SLIM0 and SLIM1 and switch among them when the converter is running.

Table 9-59 Combinations of SLIM0 and SLIM1 signals

Digital input		Speed limit
SLIM1	SLIM0	
0	0	Internal speed limit 0
0	1	Internal speed limit 1
1	0	Internal speed limit 2
1	1	Internal speed limit 3

In addition to the above four sources, the overall speed limit is also valid.

Note

Fault F07901 occurs when the actual speed exceeds the positive speed limit + hysteresis speed (p2162) or the negative speed limit - hysteresis speed (p2162).

Description of function

Internal speed limit

Select an internal speed limit by setting the following parameters. The default parameter value depends on the maximum motor speed.

Table 9-60 Parameter - internal speed limit

Parameter	Value range	Default	Unit	Description	Digital input	
					SLIM1	SLIM0
p29070[0]	0 ... 210000	210000	r/min	Internal speed limit 0 (positive)	0	0
p29070[1]	0 ... 210000	210000	r/min	Internal speed limit 1 (positive)	0	1
p29070[2]	0 ... 210000	210000	r/min	Internal speed limit 2 (positive)	1	0
p29070[3]	0 ... 210000	210000	r/min	Internal speed limit 3 (positive)	1	1
p29071[0]	-210000 ... 0	-210000	r/min	Internal speed limit 0 (negative)	0	0
p29071[1]	-210000 ... 0	-210000	r/min	Internal speed limit 1 (negative)	0	1
p29071[2]	-210000 ... 0	-210000	r/min	Internal speed limit 2 (negative)	1	0
p29071[3]	-210000 ... 0	-210000	r/min	Internal speed limit 3 (negative)	1	1

Note

Analog speed limit for S200 PTI

For S200 PTI, when the signal SLM1-SLM0 status is 0-1, p29070[1] is invalid and the analog voltage from the analog input 0 is used as the speed limit.

The analog voltage from the analog input 0 corresponds to an internal percentage value. Default speed value is the rated motor speed. The analog voltage of 10 V corresponds to the maximum speed setpoint (V_max) and this maximum speed setpoint can be specified by parameter p2000.

Overall speed limit

The overall speed limit can be configured by setting the following parameters.

Table 9-61 Parameter - overall speed limit

Parameter	Value range	Default	Unit	Description
p1083	0 ... 210000	210000	r/min	Overall speed limit for positive direction
p1086	-210000 ... 0	-210000	r/min	Overall speed limit for negative direction

Note

After the motor is commissioned, the internal speed limit and the overall speed limit are set to the maximum speed of the motor automatically.

Parameters

The following list includes the parameters of the "Speed limit" function.

Number	Name	Unit
p1083[0]	Speed limit in positive direction of rotation	[rpm]
p1086[0]	Speed limit in negative direction of rotation	[rpm]
p2000	Reference speed	[rpm]
p2162[0]	Hysteresis speed n_act > n_max	[rpm]
p29070[0...3]	Speed limit in positive direction of rotation	[rpm]
p29071[0...3]	Speed limit in negative direction of rotation	[rpm]

9.7.4 Speed reached monitoring

Overview

The speed reached monitoring function monitors the status of the actual speed.

Description of function

The threshold for triggering the signal SPDR (speed reached) can be set with the parameter p29078. When the actual speed is in the range of this window, the signal SPDR is output.

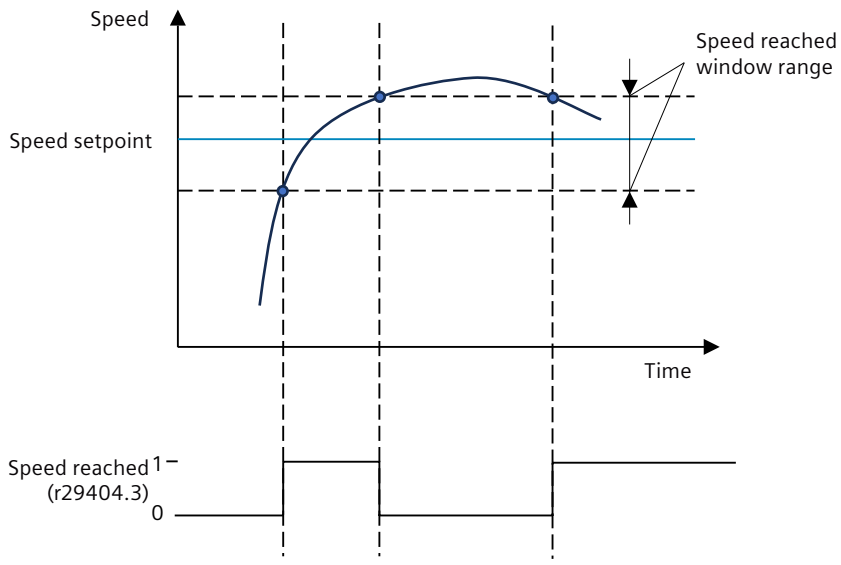

Figure 9-19 Speed reached monitoring

Parameters

The following list includes the parameters of the "Speed reached monitoring" function.

Number	Name	Unit
p29078	Threshold for speed reached	[rpm]
r29404.0...5	DO status word	

9.7.5 Torque limit

Overview

The following four sources are available for the torque limit in all control modes. You can select one of them via a combination of digital input signals TLIM0 and TLIM1 and switch among them when the converter is running.

Table 9-62 Combinations of TLIM0 and TLIM1 signals

Digital input		Torque limit
TLIM1	**TLIM0**	
0	0	Internal torque limit 0
0	1	Internal torque limit 1
1	0	Internal torque limit 2
1	1	Internal torque limit 3

In addition to the above four sources, the overall torque limit is also valid.

Note

When the motor torque exceeds the torque limit of the selected group determined by TLIM0 and TLIM1, fault F07900 occurs.

Description of function

Internal torque limit

Select an internal torque limit by setting the following parameters.

Table 9-63 Parameter - internal torque limit

Parameter	Value range	Default	Unit	Description	Digital input	
					TLIM1	**TLIM0**
p29050[0]	-150 ... 350	350	%	Internal torque limit 0 (upper)	0	0
p29050[1]	-150 ... 350	350	%	Internal torque limit 1 (upper)	0	1
p29050[2]	-150 ... 350	350	%	Internal torque limit 2 (upper)	1	0
p29050[3]	-150 ... 350	350	%	Internal torque limit 3 (upper)	1	1
p29051[0]	-350 ... 150	-350	%	Internal torque limit 0 (lower)	0	0
p29051[1]	-350 ... 150	-350	%	Internal torque limit 1 (lower)	0	1
p29051[2]	-350 ... 150	-350	%	Internal torque limit 2 (lower)	1	0
p29051[3]	-350 ... 150	-350	%	Internal torque limit 3 (lower)	1	1

Note

Analog torque limit for S200 PTI

For S200 PTI, when the signal TLM1-TLM0 status is 0-1, p29050[1] is invalid and the analog voltage from the analog input 1 is used as the torque limit.

The analog voltage from the analog input 1 corresponds to an internal percentage value. Default torque value is the rated motor torque (r0312). The analog voltage of 10 V corresponds to the rated motor torque.

The following diagram shows how the internal torque limit functions. When the torque setpoint reaches the torque limit, the actual torque output is limited to the value selected by TLIM0/TLIM1.

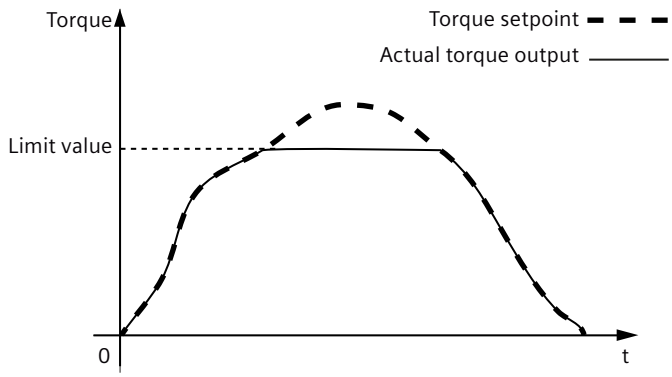

Overall torque limit

The overall torque limit takes effect when a quick stop (OFF3) happens. In this case, the servo drive brakes with a maximum torque.

Table 9-64 Parameter - overall torque limit

Parameter	Value range	Default	Unit	Description
p1520	-1000000.00 ... 20000000.00	0	Nm	Overall torque limit (upper)
p1521	-20000000.00 ... 1000000.00	0	Nm	Overall torque limit (lower)

Torque limit reached (TLR)

When the generated torque has nearly (internal hysteresis) reached the value of the upper torque limit, lower torque limit or analog torque limit, the signal TLR is output.

Parameters

The following list includes the parameters of the "Torque limit" function.

Number	Name	Unit
p0312[0]	Rated motor torque	[Nm]
p1520[0]	Torque limit upper	[Nm]
p1521[0]	Torque limit lower	[Nm]

p29050[0...3]	Upper torque limit	[%]
p29051[0...3]	Lower torque limit	[%]

9.7.6 Torque overload monitoring

Overview

The torque overload monitoring function monitors the status of the output torque.

Description of function

The overload threshold for the output torque can be set with the parameter p29054. The torque overload level window is calculated by p29054 * p0312. When the output torque exceeds the overload reached level, the signal OLL (overload level reached) is output.

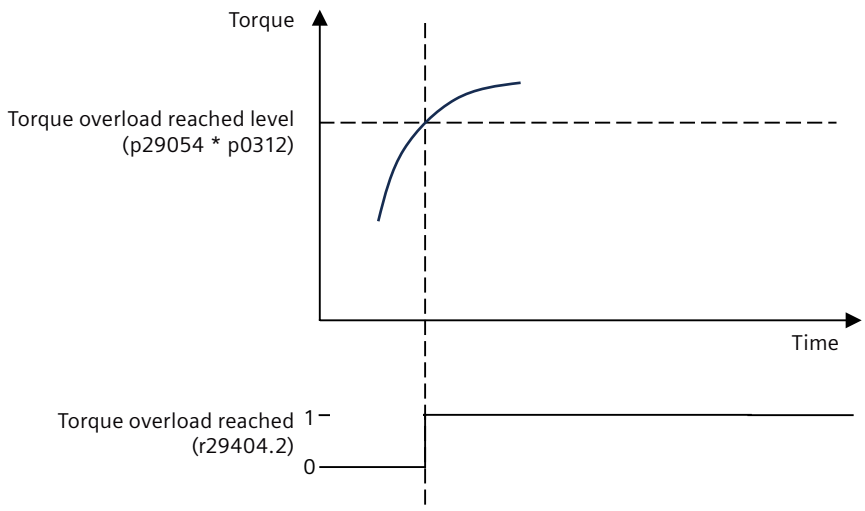

Figure 9-20 Torque overload monitoring

Parameters

The following list includes the parameters of the "Torque overload monitoring" function.

Number	Name	Unit
p0312[0]	Rated motor torque	[Nm]
p29054	Overload threshold for output signal triggering	[%]
r29404.0...5	DO status word	

9.7.7 Zero speed clamp

Overview

The function of zero speed clamp is used to stop the motor and lock the motor axis when motor speed setpoint is below a parameterized threshold level (p29075).

Description of function

The zero speed clamp function is available only when the analog input 0 is used as the source of the speed setpoint. The digital input signal ZSCLAMP is used to activate this function. When both the motor speed setpoint and the motor actual speed are below the parameterized threshold level and the signal ZSCLAMP is logic "1", the motor is locked. The converter exits from clamping state either when the motor speed setpoint is above the threshold level or when the signal ZSCLAMP is logic "0".

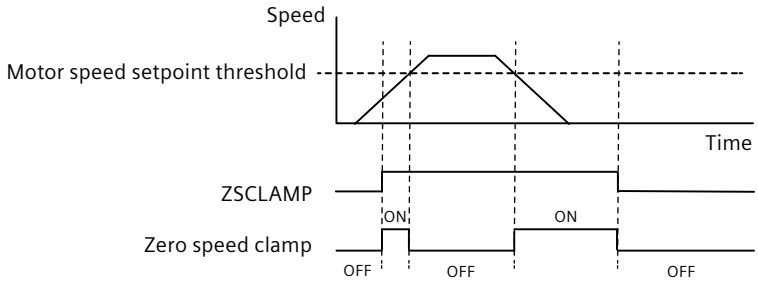

Table 9-65 DI configuration

Signal type	Signal name	Setting	Description
DI	ZSCLAMP	1	When the motor speed setpoint is below the zero speed clamp threshold, the motor is locked.
		0	No action

9.7.8 Ramp-function generator

Overview

The "ramp-function generator" function is used to limit acceleration in the event of abrupt setpoint changes and thus helps prevent load surges during drive operation.

Description of function

The ramp-up time p1120 and ramp-down time p1121 can be used to set mutually independent acceleration and deceleration ramps. This allows a controlled transition to be made in the event of setpoint changes.

The maximum speed p1082 is used as a reference value for calculating the ramps from the ramp-up and ramp-down time. For a quick stop (OFF3), a special adjustable ramp is available via the ramp-down time p1135 (for example, for quick, controlled stopping after an EMERGENCY OFF button has been pressed).

The following versions are available:

- Basic ramp-function generator (p1115 = 0)
- Extended ramp-function generator (p1115 = 1)

Basic ramp-function generator

The basic ramp-function generator is characterized by the following features:

- Ramp-up time T_{up} (p1120)
- Ramp-down time T_{dn} (p1121)

You can see the properties of the ramp-function generator from the diagram below:

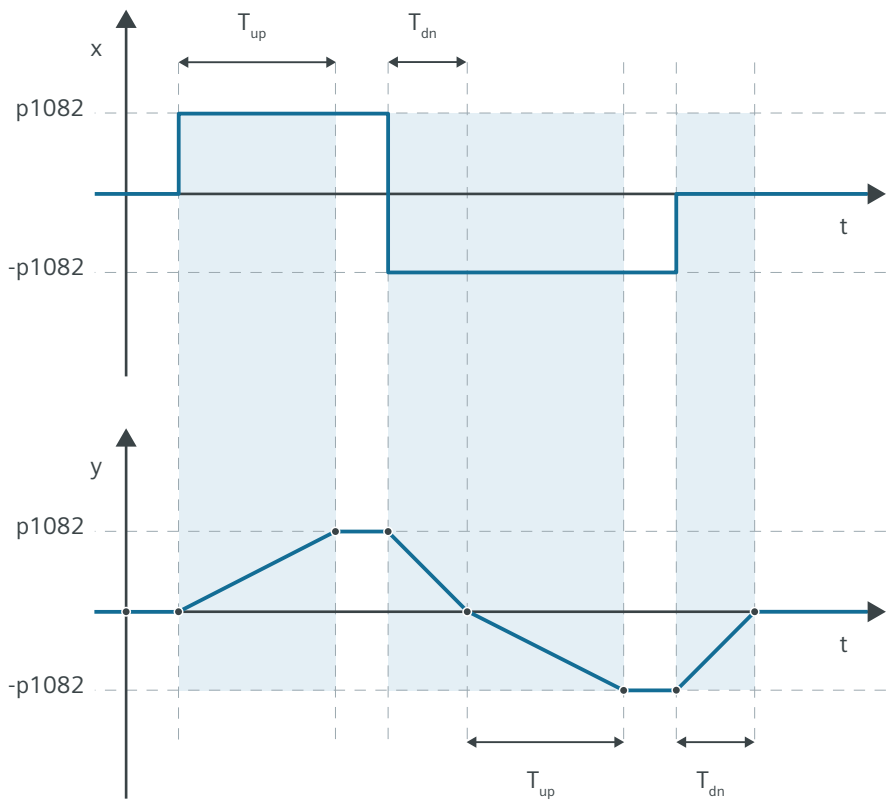

Figure 9-21 Basic ramp-function generator

Extended ramp-function generator

The extended ramp-function generator is characterized by the following features:

- Ramp-up time T_{up} (p1120)
- Ramp-down time T_{dn} (p1121)
- Initial rounding IR (p1130)

- Final rounding FR (p1131)
- Effective ramp-up time
  $T_{up_eff} = T_{up} + (IR/2 + FR/2)$
- Effective ramp-down time
  $T_{dn_eff} = T_{dn} + (IR/2 + FR/2)$

You can see the properties of the extended ramp-function generator from the diagram below:

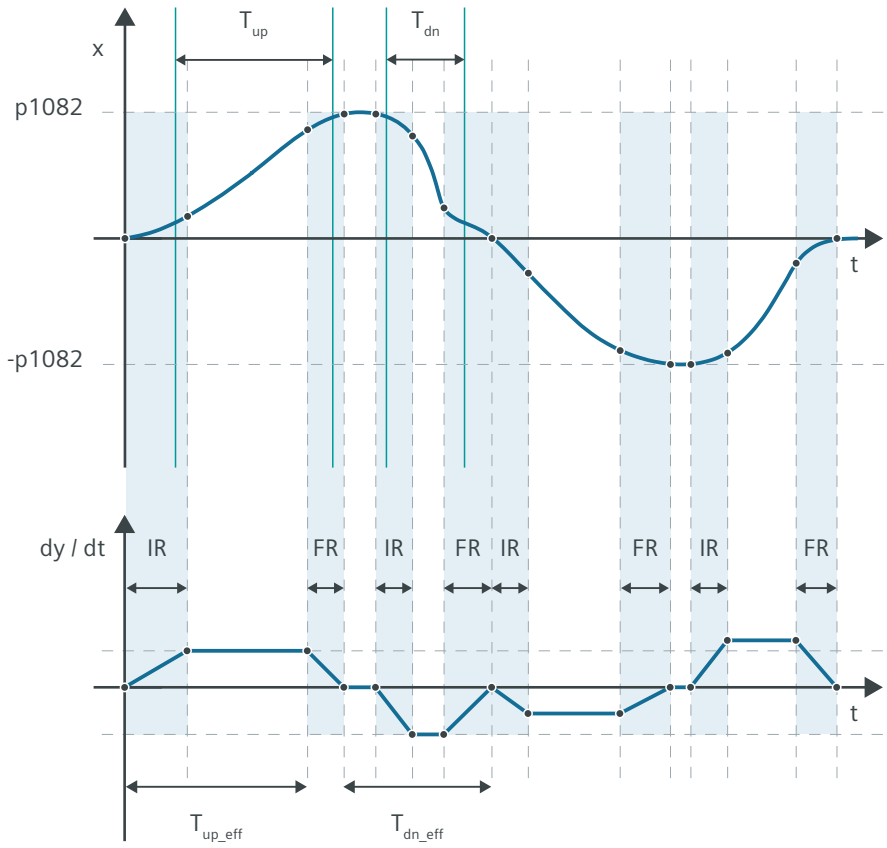

$T_{up_eff} = T_{up} + (IR/2 + FR/2)$

$T_{dn_eff} = T_{dn} + (IR/2 + FR/2)$

Figure 9-22 Extended ramp-function generator

Parameters

The following list includes the parameters of the "Ramp-function generator" function.

Number	Name	Unit
p1082[0]	Maximum speed	[rpm]
p1115	Ramp-function generator selection	
p1120[0]	Ramp-function generator ramp-up time	[s]
p1121[0]	OFF1 ramp-down time	[s]
p1130[0]	Ramp-function generator initial rounding-off time	[s]

p1131[0]	Ramp-function generator final rounding-off time	[s]
p1135[0]	OFF3 ramp-down time	[s]

9.8 Torque control (T) (for S200 PTI only)

Overview

When using the torque control mode of the S200 PTI converter, the torque on the motor shaft is output in accordance with the torque setpoint.

Description of function

In most of the applications, a motor with torque control works with a speed master, for example, to realize the line tension control or pressure control, and so on.
Otherwise, if a motor with torque control works alone, and the output torque is larger than the load torque, the motor will keep accelerating, until overspeed occurs. The converter will inhibit the pulse and output a fault signal when overspeed occurs.

9.8.1 Torque setpoint

Overview

Two sources are available for torque setpoint:

- Analog torque setpoint
- Internal fixed torque setpoint

These two resources can be selected with the digital input signal TSET.

Table 9-66 Digital input signal TSET

Signal	Level	Source of torque setpoint
TSET	0 (default)	Analog torque setpoint (analog input 1)
	1	Internal fixed torque setpoint (p29043)

Description of function

Torque control with analog torque setpoint

When the digital input signal TSET is at low level (0), analog voltage from the analog input 1 is used as the torque setpoint.

The analog voltage from the analog input 1 corresponds to an internal percentage value. The analog voltage of 10 V corresponds to the rated motor torque (r0312). For example, when the analog input is -2 V, the actual torque setpoint is -20% * p0312.

The relationship between the analog voltage and the torque setpoint is shown as follows:

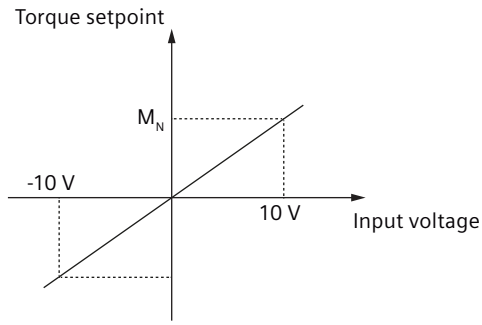

Torque control with internal fixed torque setpoint

When the digital input signal TSET is at high level (1), the internal fixed torque setpoint is used. You can define the desired torque setpoint value via the parameter p29043. For example, when you set p29043 to 50%, the actual torque setpoint will be 50% * p0312.

Table 9-67 Internal fixed torque setpoint

Parameter	Range	Default	Unit	Description
p29043	-350 ... +350	0	%	Fixed torque setpoint

Parameters

The following list includes the parameters of the "Torque setpoint" function.

Number	Name	Unit
p0312[0]	Rated motor torque	[Nm]
p29043	Fixed torque setpoint	[%]

9.8.2 Direction and stop

Overview

Two digital input signals are used to control motor direction and run/stop:

- CWE: enable clockwise rotations
- CCWE: enable counterclockwise rotations

Description of function

The following table shows you the details:

Signal		Fixed torque set-point	Analog torque setpoint		
CCWE	CWE		+ polarity	- polarity	0 V
0	0	0	0	0	0
0	1	CW	CW	CCW	0

Signal		Fixed torque set-point	Analog torque setpoint		
CCWE	CWE		+ polarity	- polarity	0 V
1	0	CCW	CCW	CW	0
1	1	0	0	0	0

Note

In S mode or T mode, when the servo motor is ready to run, signal CWE or CCWE is a must to start running the motor.

9.8.3 Speed limit

Overview

The following four sources are available for the speed limit in all control modes. You can select one of them via a combination of digital input signals SLIM0 and SLIM1 and switch among them when the converter is running.

Table 9-68 Combinations of SLIM0 and SLIM1 signals

Digital input		Speed limit
SLIM1	SLIM0	
0	0	Internal speed limit 0
0	1	Internal speed limit 1
1	0	Internal speed limit 2
1	1	Internal speed limit 3

In addition to the above four sources, the overall speed limit is also valid.

Note

Fault F07901 occurs when the actual speed exceeds the positive speed limit + hysteresis speed (p2162) or the negative speed limit - hysteresis speed (p2162).

Description of function

Internal speed limit

Select an internal speed limit by setting the following parameters. The default parameter value depends on the maximum motor speed.

Table 9-69 Parameter - internal speed limit

Parameter	Value range	Default	Unit	Description	Digital input	
					SLIM1	SLIM0
p29070[0]	0 ... 210000	210000	r/min	Internal speed limit 0 (positive)	0	0
p29070[1]	0 ... 210000	210000	r/min	Internal speed limit 1 (positive)	0	1
p29070[2]	0 ... 210000	210000	r/min	Internal speed limit 2 (positive)	1	0
p29070[3]	0 ... 210000	210000	r/min	Internal speed limit 3 (positive)	1	1
p29071[0]	-210000 ... 0	-210000	r/min	Internal speed limit 0 (negative)	0	0
p29071[1]	-210000 ... 0	-210000	r/min	Internal speed limit 1 (negative)	0	1
p29071[2]	-210000 ... 0	-210000	r/min	Internal speed limit 2 (negative)	1	0
p29071[3]	-210000 ... 0	-210000	r/min	Internal speed limit 3 (negative)	1	1

Note

Analog speed limit for S200 PTI

For S200 PTI, when the signal SLM1-SLM0 status is 0-1, p29070[1] is invalid and the analog voltage from the analog input 0 is used as the speed limit.

The analog voltage from the analog input 0 corresponds to an internal percentage value. Default speed value is the rated motor speed. The analog voltage of 10 V corresponds to the maximum speed setpoint (V_max) and this maximum speed setpoint can be specified by parameter p2000.

Overall speed limit

The overall speed limit can be configured by setting the following parameters.

Table 9-70 Parameter - overall speed limit

Parameter	Value range	Default	Unit	Description
p1083	0 ... 210000	210000	r/min	Overall speed limit for positive direction
p1086	-210000 ... 0	-210000	r/min	Overall speed limit for negative direction

Note

After the motor is commissioned, the internal speed limit and the overall speed limit are set to the maximum speed of the motor automatically.

Parameters

The following list includes the parameters of the "Speed limit" function.

Number	Name	Unit
p1083[0]	Speed limit in positive direction of rotation	[rpm]
p1086[0]	Speed limit in negative direction of rotation	[rpm]
p2000	Reference speed	[rpm]
p2162[0]	Hysteresis speed n_act > n_max	[rpm]
p29070[0...3]	Speed limit in positive direction of rotation	[rpm]
p29071[0...3]	Speed limit in negative direction of rotation	[rpm]

9.8.4 Torque limit

Overview

The following four sources are available for the torque limit in all control modes. You can select one of them via a combination of digital input signals TLIM0 and TLIM1 and switch among them when the converter is running.

Table 9-71 Combinations of TLIM0 and TLIM1 signals

Digital input		Torque limit
TLIM1	TLIM0	
0	0	Internal torque limit 0
0	1	Internal torque limit 1
1	0	Internal torque limit 2
1	1	Internal torque limit 3

In addition to the above four sources, the overall torque limit is also valid.

Note

When the motor torque exceeds the torque limit of the selected group determined by TLIM0 and TLIM1, the motor stops.

Description of function

Internal torque limit

Select an internal torque limit by setting the following parameters.

Table 9-72 Parameter - internal torque limit

Parameter	Value range	Default	Unit	Description	Digital input	
					TLIM1	TLIM0
p29050[0]	-150 ... 350	350	%	Internal torque limit 0 (upper)	0	0
p29050[1]	-150 ... 350	350	%	Internal torque limit 1 (upper)	0	1
p29050[2]	-150 ... 350	350	%	Internal torque limit 2 (upper)	1	0
p29050[3]	-150 ... 350	350	%	Internal torque limit 3 (upper)	1	1

Parameter	Value range	Default	Unit	Description	Digital input	
					TLIM1	TLIM0
p29051[0]	-350 ... 150	-350	%	Internal torque limit 0 (lower)	0	0
p29051[1]	-350 ... 150	-350	%	Internal torque limit 1 (lower)	0	1
p29051[2]	-350 ... 150	-350	%	Internal torque limit 2 (lower)	1	0
p29051[3]	-350 ... 150	-350	%	Internal torque limit 3 (lower)	1	1

Note

Analog torque limit for S200 PTI

For S200 PTI, when the signal TLM1-TLM0 status is 0-1, p29050[1] is invalid and the analog voltage from the analog input 1 is used as the torque limit.

The analog voltage from the analog input 1 corresponds to an internal percentage value. Default torque value is the rated motor torque (r0312). The analog voltage of 10 V corresponds to the rated motor torque.

The following diagram shows how the internal torque limit functions. When the torque setpoint reaches the torque limit, the actual torque output is limited to the value selected by TLIM0/TLIM1.

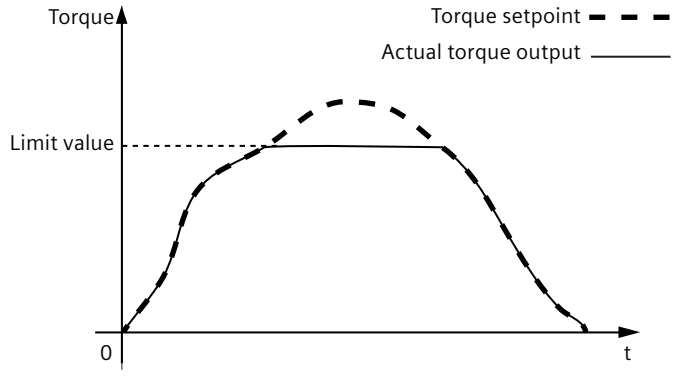

Overall torque limit

The overall torque limit takes effect when a quick stop (OFF3) happens. In this case, the servo drive brakes with a maximum torque.

Table 9-73 Parameter - overall torque limit

Parameter	Value range	Default	Unit	Description
p1520	-1000000.00 ... 20000000.00	0	Nm	Overall torque limit (upper)
p1521	-20000000.00 ... 1000000.00	0	Nm	Overall torque limit (lower)

Torque limit reached (TLR)

When the generated torque has nearly (internal hysteresis) reached the value of the upper torque limit, lower torque limit or analog torque limit, the signal TLR is output.

Parameters

The following list includes the parameters of the "Torque limit" function.

Number	Name	Unit
p0312[0]	Rated motor torque	[Nm]
p1520[0]	Torque limit upper	[Nm]
p1521[0]	Torque limit lower	[Nm]
p29050[0...3]	Upper torque limit	[%]
p29051[0...3]	Lower torque limit	[%]

9.8.5 Torque overload monitoring

Overview

The torque overload monitoring function monitors the status of the output torque.

Description of function

The overload threshold for the output torque can be set with the parameter p29054. The torque overload level window is calculated by p29054 * p0312. When the output torque exceeds the overload reached level, the signal OLL (overload level reached) is output.

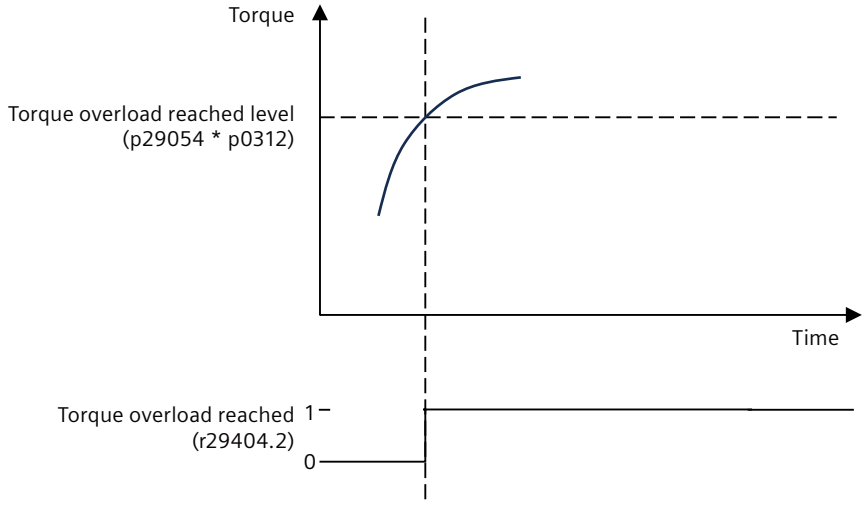

Figure 9-23 Torque overload monitoring

Parameters

The following list includes the parameters of the "Torque overload monitoring" function.

Number	Name	Unit
p0312[0]	Rated motor torque	[Nm]
p29054	Overload threshold for output signal triggering	[%]

r29404.0...5	DO status word

9.8.6 Protective speed limit

Overview

In the torque control mode, the motor speed depends on the drive torque and the load torque. If the drive torque is higher than the load torque, the motor speed becomes higher and higher. The protective speed limit function can limit the maximum speed in the torque control mode.

Description of function

You can select the protective speed limit source via the parameter p29101:

- p29101 = 0: Inhibit the protective speed limit function
- p29101 = 1: The protective speed limit values are selected by the fixed value defined by parameter p29102
  - p29102[0]: Protective speed limit value in positive direction
  - p29102[1]: Protective speed limit value in negative direction
- p29101 = 2: The protective speed limit values are selected by the analog input 0

Parameter r29104 indicates the status of the protective speed limit.

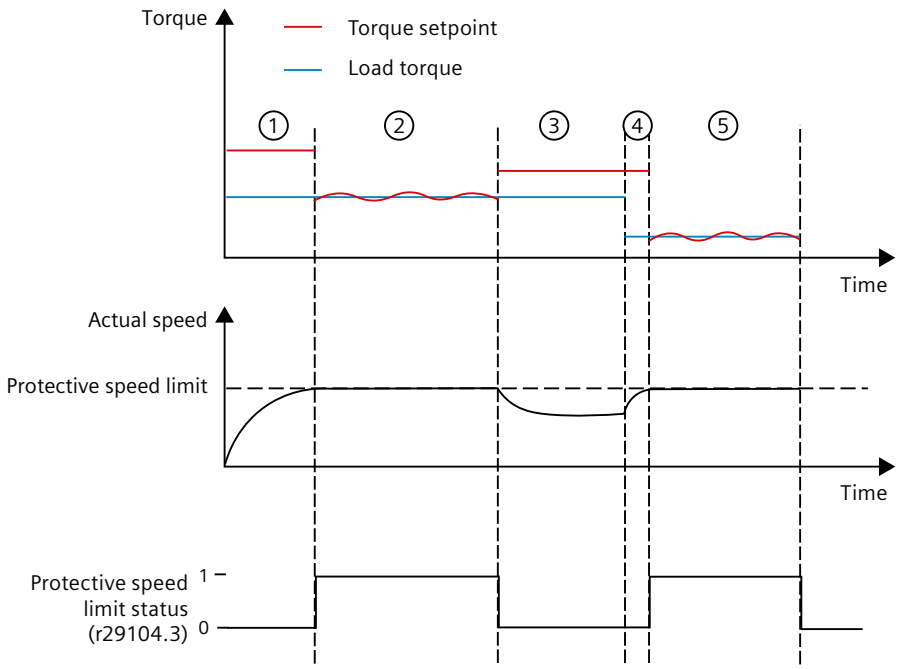

1. When the torque setpoint is much higher than the load torque, the actual speed becomes higher and higher.
2. Once the actual speed reaches the protective speed limit, the protective speed control takes into effect and the torque setpoint derives from the protective speed control.
3. When the torque setpoint becomes lower, the actual speed becomes lower than the protective speed limit and the protective speed control is deactivated.
4. When the load torque is much smaller than the torque setpoint, the actual speed becomes higher and higher again until it reaches the protective speed limit.
5. Protective speed control takes into effect again and the torque setpoint derives from the protective speed control.

Figure 9-24 Timing diagram

Note

Protective speed controller P gain (p29108) and protective speed controller filter time (p29109) may influence the protective speed control. If the parameter settings are not appropriate, the servo system vibrates.

Parameters

The following list includes the parameters of the "Protective speed limit" function.

Number	Name	Unit
p29101	Protective speed limit (PSL) source selection	
p29102[0...1]	Positive/negative protective speed limit fixed value	[rpm]
c29103[0...1]	Protective speed limit	

r29104.0...3	Protective speed limit status	
p29108	Protective speed controller P gain	[Nms/rad]
p29109	Protective speed controller filter time	[ms]

9.9 Safety Integrated (for S200 PTI only)

9.9.1 Machinery Directive

Overview

The basic safety and health requirements specified in Annex I of the Directive must be fulfilled for the safety of machines.

Description of function

The protective goals must be implemented responsibly to ensure compliance with the Directive.

Manufacturers of a machine must verify that their machine complies with the basic requirements. This verification is facilitated by means of harmonized standards.

IEC 61800-5-2 Adjustable-speed electrical power drive systems Part 5-2 is relevant for the Machinery Directive: Safety requirements - Functional safety

Within the context of IEC 61508, IEC 61800-5-2 considers adjustable speed electric power drive systems (PDS), which are suitable for use in safety-related applications (PDS(SR)).

IEC 61800-5-2 places requirements on PDS(SR) as subsystems of a safety-related system. This therefore permits the implementation of the electrical/electronic/programmable electronic elements of a PDS(SR) taking into account the safety-relevant performance of the safety function(s) of a PDS.

Manufacturers and suppliers of PDS(SR) can prove to users (e.g. integrators of control systems, developers of machines and plants etc.) the safety-relevant performance of their equipment by implementing the specifications stipulated in standard IEC 61800-5-2.

9.9.2 Functional safety

Overview

A system or machine is considered functionally safe if the safety-relevant parts of the protection and control equipment function correctly.

Description of function

Safety, from the perspective of the object to be protected, cannot be split-up. The causes of danger and therefore also the technical measures to prevent them can vary widely. This is the reason that a distinction is made between various safety types (e.g. by specifying the cause of potential hazards). "Functional safety" is involved if safety depends on the correct function.

To ensure the functional safety of a system or machine, the safety-related parts of the protection and control devices must function correctly. In the case of a fault, systems must respond in such a way that either the plant remains in a safe state or it is brought into a safe state. In this case, it is necessary to use specially qualified technology that fulfills

the requirements described in the associated Standards. The requirements to implement functional safety are based on the following basic objectives:

- Avoiding systematic faults
- Controlling random faults or failures

Benchmarks for establishing whether or not a sufficient level of functional safety has been achieved include the probability of hazardous failures, the fault tolerance and the quality that is to be guaranteed by avoiding systematic faults. This is expressed in the standards using specific classification. In IEC 61508, IEC 62061 "Safety Integrity Level" (SIL) and ISO 13849-1 "Category" and "Performance Level" (PL).

9.9.3 Safety Integrated Functions

Overview

Safety Integrated Functions are used to reduce risk in safety-related applications.

Requirement

⚠ WARNING

Unsafe operation as a result of inadequate measures applied to minimize risk

Safety Integrated can reduce the level of risk associated with systems and machines. Machines or plants, however, can only be operated safely in conjunction with Safety Integrated if the machine OEM carefully complies with the following:

- The machine OEM precisely knows the safety instructions and residual risks specified in the technical user documentation and complies with the documented constraints for Safety Integrated.
- Carefully constructs and configures the system or machine. A careful and thorough acceptance test must then be performed by qualified personnel and the results documented.
- Implements and validates all the measures required in accordance with the system or machine risk analysis using programmed and configured Safety Integrated Functions or by other means.
- The use of Safety Integrated does not replace the risk assessment of the system or machine by the machine manufacturer as specified by the EU Machinery Directive.
  In addition to using Safety Integrated Functions, additional risk reduction measures must be implemented.

WARNING

Unexpected automatic start of the motor

An EMERGENCY STOP must stop the motor involved according to stop category 0 or 1 according to IEC 60204-1 using Safety Integrated Function STO or SS1.

Dangerous operating states can occur if the motor automatically starts when the EMERGENCY STOP is reset.

- After stopping according to stop Category 0 or 1, avoid that the motor automatically starts again.
- If the risk analysis permits it, the motor may automatically start after deselecting a Safety Integrated Function for motion monitoring. An automatic start is possible when a protective door is closed, for example.

WARNING

Undesirable motor motion after changing the hardware or software

Unsafe operating states can occur after changing or replacing hardware or software components.

- Close all protective devices after changing or replacing.
  Persons must not be present in the danger zone.
- Depending on whether a change or replacement was carried out, perform either a reduced or a complete acceptance test.
- Before you enter the hazardous area, test all drives by briefly moving them in both directions of motion to ensure that the closed-loop response is stable.

WARNING

Unexpected machine motion immediately after switching on the supply voltage

The Safety Integrated Functions cannot be selected immediately after switching on the supply voltage. The Safety Integrated Functions can only be selected after the system has completely run-up. As a consequence, there is an increased risk of an accident while the system runs-up. Accidents can result in death or severe injuries.

- Close all protective devices before the system runs up.
  Persons must not be present in the danger zone.

WARNING

Unsafe operation as encoder monitoring is deactivated

Deactivated or incorrectly parameterized hardware and software monitoring functions of the encoder can result in unsafe operating states.

- Activate the encoder monitoring functions.
- Carefully parameterize the encoder monitoring functions.
- Depending on the fault type and the responding monitoring function, activate stop function category 0 or 1 according to IEC 60204-1.

WARNING

Unexpected motor movements due to manipulated connecting cables

The manipulation of the connecting cables can cause unexpected motor movements in a machine or plant. Particularly in machines or plants in which Safety Integrated Functions are used to minimize risks, manipulation can result in serious personal injury or death.

- Prevent unauthorized access to the converter, for example by using a lockable control cabinet.
- Protect the cables inside and outside the control cabinet against manipulation by taking one of the following measures:
  - Sheathe the cables to the motors, encoders and sensors.
  - Route the cables in empty conduits.

WARNING

Unexpected machine movement caused by inactive Safety Integrated Functions

Inactive Safety Integrated Functions or Safety Integrated Functions that have not been adapted can trigger unexpected machine movements that may result in serious injury or death.

- Prevent unauthorized persons accessing the drive.
- Protect configurations with active Safety Integrated Functions against changes by assigning roles using user management (UMAC).

Note

Fault of Safety Integrated Functions in the case of non-EMC-compliant installation

A non-EMC-compliant installation of your machine/system can result in sporadic faults in Safety Integrated Functions.

- Install the drive so that it is EMC-compliant.

Note

Protection against manipulation by unauthorized third parties

Safety Integrated Functions protect against hardware and software faults, but not against manipulation by unauthorized third parties.

Protective measures against unauthorized manipulation are described in the Startdrive Operating Instructions and online help. The measures address the following issues:

- Parameter configuration of the Safety Integrated Functions
- Connection
- Hardware components

Note

Safety Integrated Functions should be protected with UMAC (User Management and Access Control).

The "Drive Safety Engineer" role must be assigned to a named user and must not be assigned to Anonymous.

If the role is not assigned, alarm A01637 is displayed.

Description of function

In comparison to standard converter functions, Safety Integrated Functions have an especially high degree of fail-safety. The Performance Level (PL) and Safety Integrity Level (SIL) of the corresponding standards are a measure of fail-safety.

Safety Integrated Functions are accordingly suitable for reducing risk in safety-related applications. If the risk analysis of the machine or the system indicates a special hazard potential in the application, an application is safety-related.

Safety Integrated means that the functions are integrated into the converter and can be executed without need of external components.

The converter performs a cyclic data comparison of the monitoring channels and identifies limit value violations of Safety Integrated Functions. Faults that are detected result in a safety message with a subsequent stop response.

The Safety Integrated Functions are in conformance with the following standards:

- Safety Integrity Level (SIL) 3 to IEC 61800-5-2
- Performance Level (PL) e according to ISO 13849-1
- Category 3 or 4 according to ISO 13849-1

9.9.4 Certification

Description

The Safety Integrated Functions comply with:

- Safety Integrity Level (SIL) 3 according to IEC 61800-5-2
- Performance Level (PL) e according to ISO 13849-1
- Category 3 or 4 according to ISO 13849-1

The Safety Integrated Functions correspond to functions according to IEC 61800-5-2.

The individual Safety Integrated components have the following certifications:

Table 9-74 Certifications for the converter Safety Integrated component

Converter	SIL	PL	Category
Control via F-DI	SIL 3	PL e	Category 3 or 4[1)]
Stop functions STO, SS1	SIL 3	PL e	Category 4

[1)] Depending on the parameterized self-test of the Fail-safe Digital Inputs

9.9.5 PFH values

Description

The probability of failure for Safety Integrated Functions must be specified in the form of a PFH value (Probability of Failure per Hour) according to IEC 61800-5-2, IEC 62061, and ISO 13849-1. The PFH value of a Safety Integrated Function depends on the safety concept of the converter and its hardware configuration, as well as on the PFH values of other components used for this Safety Integrated Function.

More information

The PFH values can be found under: PFH values (https://support.industry.siemens.com/cs/ww/en/view/76254308)

You can map the PFH values of all Safety Integrated components from Siemens using the "Safety evaluation" function in the TIA selection tool: Safety evaluation (http://www.siemens.com/safety-evaluation-tool)

9.9.6 Usage time

Requirement

⚠ WARNING

Unexpected motor response when the service life is exceeded

If the service life is exceeded, the probability of failure of the Safety Integrated Functions increases. This can result in unexpected motor movement and as a consequence can cause accidents involving death or severe injury.

- Take the converter out of service once the service life has been exceeded.

Description

The safety parameters of the Safety Integrated Functions are valid for a service life of twenty years.

9.9.7 Stop functions

9.9.7.1 Safe Torque Off (STO)

Overview

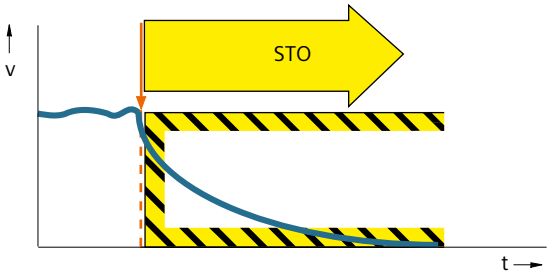

Figure 9-25 Overview STO

The Safe Torque Off (STO) function prevents the torque-generating supply of energy to the motor and prevents the motor from unexpectedly starting.

Requirement

STO function is enabled in the function selection.

⚠ WARNING

Unexpected motor movement through active Safe Torque Off

When the Safe Torque Off (STO) function is active, then the motor can move unexpectedly, e.g. a suspended load can accelerate the motor. Unexpected movements can lead to damage to property, risk to persons, severe injury and death.

- Take account of the way the Safe Torque Off (STO) function works when you perform risk assessments of the machine or system.
- Prevent movements of the motor, for example by using a holding brake.

⚠ WARNING

Danger due to short, limited motion

If two power transistors simultaneously fail in the power unit (one in the upper and one in the lower inverter bridge), then this can cause brief, limited movement.

The maximum movement can be:

- Synchronous rotary motors: Max. movement = 180° / no. of pole pairs
- Synchronous linear motors: Max. movement = pole width

Description of function

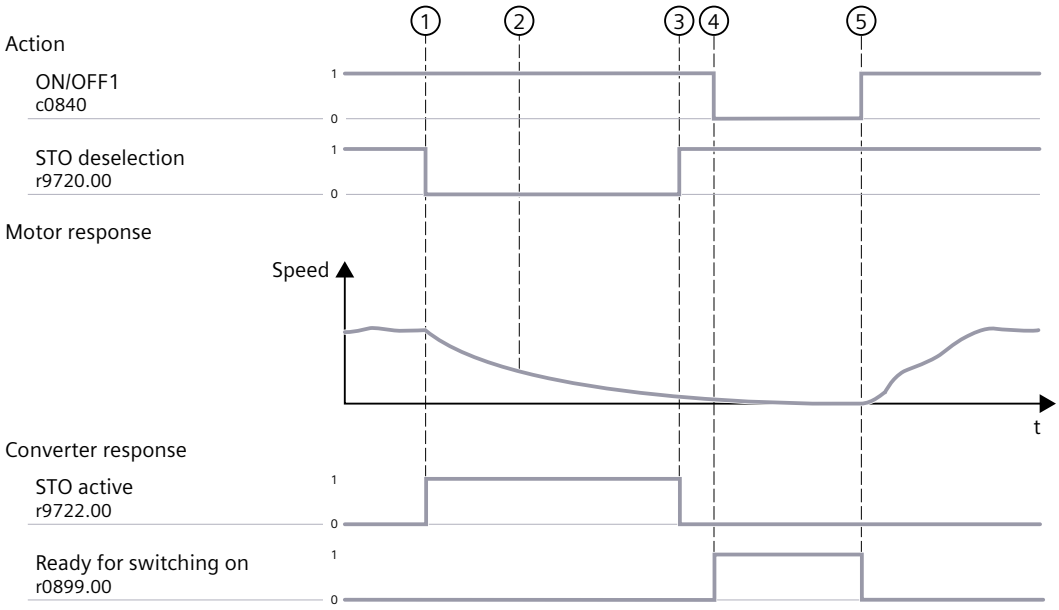

Figure 9-26 Flow diagram STO

	Action	Motor / converter response
1	Selection of STO	• The converter detects selection of STO and signals the status "STO active" (r9722.00). • The converter interrupts the torque-generating energy supply to the motor. • The "switching on inhibited" status prevents the motor from restarting automatically.
2	Coast down	• The motor coasts down to a standstill.
3	Deselection of STO	• The converter detects deselection of STO.
4	Signal change at ON/OFF1 from 1 to 0	• The converter is ready to start again.
5	Signal change at ON/OFF1 from 0 to 1	• The motor starts again.

Example

Applications include all machines and systems with moving axes (for example, conveyor technology, handling).

With STO, maintenance work on the machine with an open protective door is possible, for example. An EMERGENCY STOP with electromechanical disconnection is not required.

Parameters

The following list includes the parameters of the "Safe Torque Off (STO)" function.

Number	Name	Unit
p9603.0	SI control	
p9604.0...2	SI enable	
r9720.0...7	SI control word	
r9722.0...7	SI status signals	
r10352.0...15	SI STO select cause	

9.9.7.2 Safe Stop 1 (SS1)

Overview

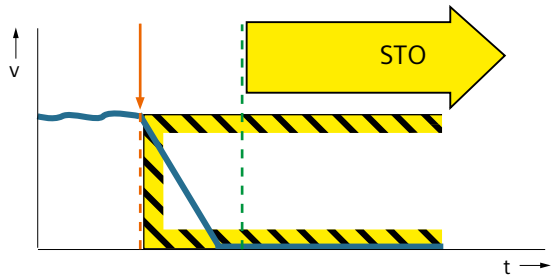

Figure 9-27 Overview SS1

Safe Stop 1 (SS1) stops a dangerous movement of a machine component.

Note

SS1 cannot be interrupted

- If SS1 is deselected again during this time, the STO function is selected and deselected again by the drive immediately after the delay time has elapsed. This terminates the SS1 function normally. It cannot be interrupted.
- During the delay time, SS1 cannot be deselected by withdrawing the control command, therefore fulfilling the requirements of IEC 60204-1 relating to an EMERGENCY STOP function in stop Category 1.

Requirement

SS1 is enabled in the function selection.

⚠ WARNING

Unexpected motor movement through active Safe Torque Off

There may be unexpected motor movements if the Safe Torque Off (STO) function is active. For instance, the motor can coast down to a standstill or a hanging load may accelerate the motor. Unexpected movements can lead to damage to property, risk to persons, severe injury and death.

- Consider the functionality of the SS1 function in the risk assessment of the machine or plant.
- Prevent movements of the motor, for example, by using a holding brake.

Description of function

With Safe Stop 1 (SS1), the converter stops a dangerous movement of an electrically driven machine component. After stopping, the Safe Torque Off (STO) function prevents the machine component from restarting.

The supported safe stop version of the converter is Safe Stop 1 with time control (SS1-t).

Example

Table 9-75 SS1 application example

Example	Possible solution
A converter must brake a motor as quickly as possible after the EMERGENCY STOP pushbutton has been actuated. It is not permissible that the stationary motor undesirably restarts.	Select SS1 via a fail-safe digital input.

9.9.7.3 Safe Stop 1 with time control (SS1-t)

Overview

With SS1-t, the converter stops the motor along the OFF3 ramp within the set delay time. After the delay time elapses, irrespective of the current speed, the converter activates the Safe Torque Off (STO) function.

Description of function

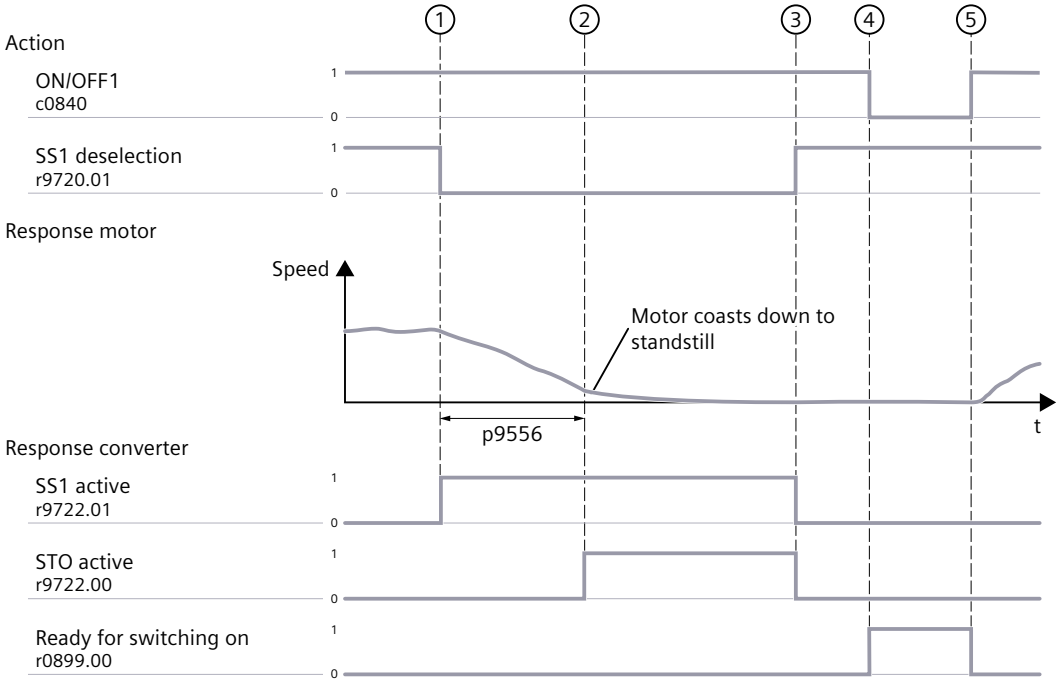

Figure 9-28 Flow diagram Safe Stop 1 with time control (SS1-t)

Action		Motor / converter response
1	Selection of SS1	• The converter detects selection of SS1 and signals the status "SS1 active" (r9722.01). • The converter starts the transition time SS1 to STO (p9556). • The converter stops the motor along the OFF3 ramp. Stopping along the OFF3 ramp is not monitored. • Deselecting SS1 after the time 1 does not interrupt the stopping of the motor.
2	Transition to STO	• The transition time from SS1 to STO (p9556) has elapsed. • The converter activates STO and signals status "STO active" (r9722.00) and status "SS1 active". • The converter activates STO even if SS1 is deselected in the meantime. • STO interrupts the torque-generating supply of energy to the motor and prevents the motor from restarting. • The motor coasts down to a standstill.
3	Deselection of SS1	• The converter detects when SS1 is deselected. • The converter deactivates STO.
4	Signal change at ON/OFF1 from 1 to 0	• The converter is ready to start again.
5	Signal change at ON/OFF1 from 0 to 1	• The motor starts again.

Parameters

The following list includes the parameters of the "Safe Stop 1 with time control (SS1-t)" function.

Number	Name	Unit
p9556	SI transition time SS1 to STO	[ms]
p9603.0	SI control	
p9604.0...2	SI enable	
r9720.0...7	SI control word	
r9722.0...7	SI status signals	
r10353.0...13	SI SS1 select cause	

9.9.7.4 Functional features of Safety Integrated Functions

Overview

The STO function is enabled by default and it is active with specified default settings.

Description of function

A stop function (STO or SS1) for EMERGENCY STOP via X131 terminal is defined and is permanently assigned.

You can use the provided STO plug to connect the external safety device, for example, an EMERGENCY STOP button.

If you do not want to use the safety function, you can either insert the provided STO disable plug into the X131 socket or select "No Safety Integrated Functions" in the commissioning tool during commissioning.

More information

For more information about the terminal description and terminal wiring, see Section "Connecting STO (for S200 PTI only) (Page 173)".

9.9.7.5 Selection of the Safety Integrated Functions

Overview

In the function selection, the available Safety Integrated Functions are depending on the control type.

The function selection offers the following setting option:

- Selection of each individual function

Description of function

Safety Integrated Functions are enabled with default settings. The default settings can be parameterized. Each Safety Integrated Function can be separately enabled or inhibited. When supplied, the Safety Integrated Function STO is already enabled.

If the STO and SS1 functions should be controlled via F-DI, the SI control type "Via terminals" must be selected in the function selection. Even if the functions STO and SS1 are not enabled in the function selection, the STO and SS1 functions are used as stop responses in case of a safety fault. Therefore, the STO and SS1 functions must always be parameterized, otherwise, the default settings of the functions are used for the stop responses.

The safety monitoring cycle is 4 ms by default. This cycle time cannot be changed.

9.9.7.6 Control via terminals

Overview

The F-DI configuration includes the following steps:

- Assigning Safety Integrated Functions to a fail-safe digital input (F-DI)
- Defining the input modes of the F-DI

Description of function

The F-DI configuration allows the assignment of Safety Integrated Functions to the F-DI. After configuring the F-DI, the interconnected Safety Integrated Function can be selected and deselected.

In the F-DI configuration, it is also possible to define the input modes of an F-DI (p10040). The setting defines whether the F-DI should operate as NC contact/NC contact (default setting) or as NC contact/NO contact.

9.9.7.7 Checksums of Safety Integrated Functions

Overview

The checksums correspond to a fingerprint for the parameterized Safety Integrated functionality of the converter.

Description of function

Once commissioning has been completed, the converter calculates the checksums.

Functional checksum (r9780) and time stamp (r9781 and r9782) are used to track changes (safety logbook). The checksum is updated after completing the Safety Integrated commissioning.

Based on the checksum of functions (r9798), it can be identified whether the parameterization of the Safety Integrated Functions was changed.

An acceptance test is required after changing the checksums. The system outputs the appropriate messages to indicate that an acceptance test is required. The checksums are used for documentation purposes within the scope of an acceptance test.

The parameterization can be transferred to several devices by separating the checksums for function and communication. When transferring the parameterization to several devices, you must check whether the device is correctly assigned in the communication group.

9.9.7.8 Discrepancy time

Overview

During the discrepancy time, the converter tolerates inconsistent input signals.

Description of function

The converter monitors at the two input terminals of the F-DI whether the input signals attain the same logical signal state within the discrepancy time. For electromechanical sensors, for example, EMERGENCY STOP buttons or position switches, the two sensor contacts never switch at precisely the same time. The input signals of the F-DI are inconsistent (discrepancy).

During the discrepancy time, the converter tolerates inconsistent input signals. The discrepancy time does not extend the converter response time.

A permanent discrepancy signifies an error in the F-DI interconnection. In this case, the converter responds with a safety message.

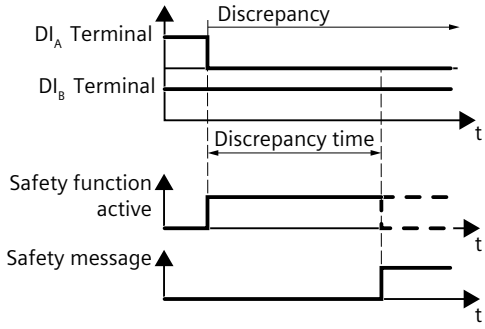

Figure 9-29 Permanent discrepancy

9.9.7.9 Input filter

Overview

The input filter suppresses unwanted brief signal changes at a fail-safe digital input (F-DI).

Requirement

⚠ WARNING

Unexpected movements due to long connecting cables

If a cable at a fail-safe digital input is too long, the fail-safe digital input might not reliably detect a short-circuit of the connecting cable to 24 V or to ground. An undetected short-circuit may mean that the connected sensor is no longer working. This may impair the functional safety of the machine or the system and therefore endanger people or lead to material damage.

- Only connect cables with a length of ≤ 30 m to a fail-safe digital input.

Description of function

If a fail-safe digital input (F-DI) is connected to an electromechanical sensor, for example, then contact bounce leads to brief signal changes. In this case, an immediate response of the converter to signal changes is not desirable. Too many signal changes within a specific time result in a converter fault.

During the filter time (p10017) of the input filter, the converter ignores signal changes.

The set input filter impacts the response time of the safety function connected to the F-DI.

9.9.7.10 Self-test of the fail-safe digital input (F-DI)

Overview

To detect faults at an early stage, the converter continuously tests its shutdown paths, functions and interfaces.

Various modes are available to test a fail-safe digital input (F-DI):

- Self-test with internal test signals
- Self-test using specified dark pulses
- Self-test using externally specified dark pulses

Description of function

The self-test checks with test signals at the input terminals of the F-DI whether the F-DI can be switched to the fail-safe state (to "low"). If the converter does not detect a feedback signal, then it triggers a fault response.

The input filter time (p10017) prevents a converter response to the dark pulse. If the input filter time is shorter than the test signal or dark pulse length, then the converter interprets the dark pulse as a switching operation.

Self-test with internal test signals

The converter internally generates test signals for the input circuit of the F-DI (p10041 = 0).

The test signal length and the test cycle cannot be changed.

The self-test with internal test signals complies with:

- Safety Integrity Level (SIL) 3 according to IEC 61800-5-2
- Performance Level (PL) e according to ISO 13849-1
- Category 3 according to ISO 138491

Self-test using specified dark pulses

The converter provides the switchable voltage source VS+ at terminal block X131. VS+ generates dark pulses, to diagnose the control circuit, for example.

The self-test using specified dark pulses with VS+ (p10041 = 1) offers additional short-circuit detection between ground and 24 V.

The dark pulse length of the switchable power supply (p10018) can be parameterized. The test cycle has a fixed value of 5 seconds.

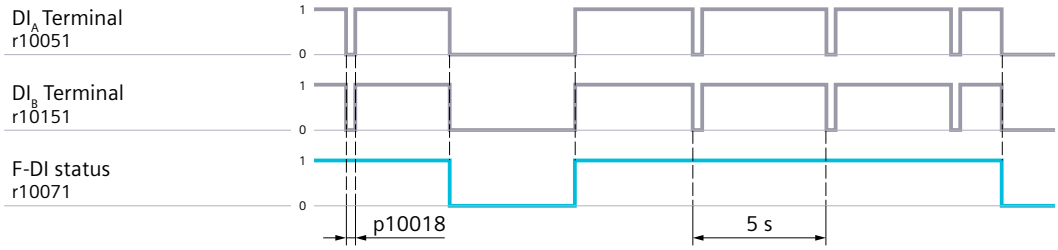

Figure 9-30 Dark pulses through switchable power supply

For the input filter:

- p10017 > dark pulse length p10018 + 2 ms

The self-test using specified dark pulses meets the following requirements:

- Safety Integrity Level (SIL) 3 according to IEC 61800-5-2
- Performance Level (PL) e according to ISO 13849-1
- Category 4 according to ISO 138491

Self-test using externally specified dark pulses

An electronic control, e.g. F-PLC, generates dark pulses at the input terminals of the F-DI (p10041 = 3).

The dark pulse length is determined by the control. The maximum wait time for dark pulses (p10019) can be parameterized.

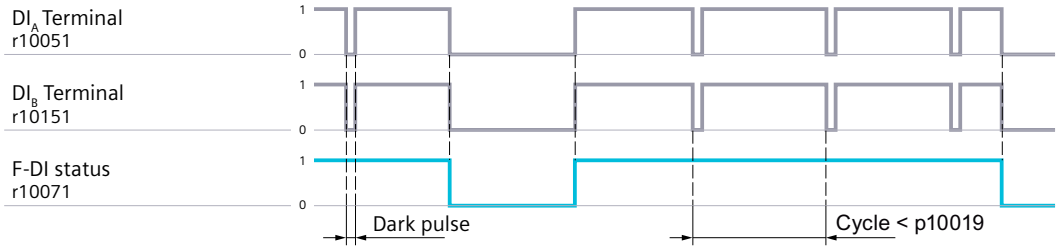

Figure 9-31 Dark pulses through control

For the input filter:

- p10017 > dark pulse length + 2 ms
  The test pulse length of the external control must be checked and the input filter must be adapted.

The self-test using specified dark pulses meets the following requirements:

- Safety Integrity Level (SIL) 3 according to IEC 61800-5-2
- Performance Level (PL) e according to ISO 13849-1
- Category 4 according to ISO 138491

9.9.8 Acceptance - completion of commissioning

Overview

The machine manufacturer is responsible in ensuring that the plant or machine functions perfectly. As a consequence, after commissioning, the machine manufacturer must check those functions which represent an increased risk of injury or material damage, or have them checked by specialist personnel. This acceptance or validation is specified in the European Machinery Directive and comprises 2 parts:

- **Acceptance test:** Check the safety-relevant functions and machine parts after commissioning.
- **Documentation:** Generate an "Acceptance report" that describes the test results.

ISO 13849-1 provides additional information relating to validation, for example. The acceptance test requirements (configuration check) for the safety functions of electric drives are based on IEC 61800-5-2.

Description of function

Acceptance test of the machine or plant

The acceptance test checks whether the safety-relevant functions in the plant or machine function correctly. The documentation of the components used in the Safety Integrated Functions can also provide information about the tests required. Testing the safety-relevant functions includes, e.g. the following:

- Is all safety equipment, such as protective door monitoring devices, light barriers or EMERGENCY STOP buttons, connected and ready for operation?
- Does the higher-level control respond as expected to the safety-relevant feedback signals of the drive?
- Do the drive settings match the configured safety-relevant function in the machine?

Acceptance test of the converter

The acceptance test of the converter is a part of the acceptance test of the entire machine or plant.

The acceptance test of the converter verifies whether Safety Integrated Functions have been set to match the configured safety functions of the machine. The acceptance test documents the settings with which the real function fulfills the intended functionality.

Documentation

The documentation encompasses the following:

- Result of the acceptance tests
- Settings of the Safety Integrated functions

The documentation must be signed.

Persons authorized to perform the acceptance test

Personnel from the machine manufacturer, who, on account of their technical qualifications and knowledge of the safety functions, are in a position to perform the acceptance test in the correct manner are authorized to perform the acceptance testing of the converter and the motor.

9.9.9 Acceptance after series commissioning

Overview

When the project is transferred to other machines (series commissioning) a reduced acceptance test of the Safety Integrated Functions is necessary.

Description of function

In series commissioning, the reduced acceptance test involves the following steps:

- Test of the EMERGENCY STOP function (STO or SS1)
- Countersigned acceptance report with the following content:
  - New converter data (HW/SW version)
  - Changed checksum
  - Time stamp

9.9.10 Acceptance after a component has been replaced

Overview

After making changes to the machine, a new acceptance test must be performed with documentation.

Requirement

⚠ WARNING

Unexpected movement due to incorrect component replacement

After a component has been replaced, connections or functions may be defective. This can lead to unexpected movements of motors that may result in death or serious injury.

- After component replacement, run a simplified function test.

The faulty component was replaced.

Description of function

The following table shows the converter response after a component replacement and the resulting action required:

Table 9-76 Response after a component has been replaced

Replaced component	Control type	Converter response (alarm)	User action	Diagnostic parameters
			Save by copying from RAM to ROM (p0977 = 1) [1]	
Converter	All	A01641.0 = 1	Yes	r9776.2 = 1

[1] The condition for saving is: There is no firmware update active on the converter.
Without saving, the converter signals the fault again after the next POWER ON.

Acceptance test and acceptance report

Alarm A01641 reports which component was replaced.

Each time a component is replaced, a function test must always be carried out so that incorrect connections or wiring can be ruled out.

Converter replacement

Replacement of a converter is indicated after running up as the checksums change and alarm A01641 is output. No additional stop response is initiated, and operation of the drive is not restricted as a result. The message is deleted after saving by copying from RAM to ROM and restarting the converter.

A reduced acceptance test of the Safety Integrated Functions is required:

- Test of the EMERGENCY STOP function (STO or SS1)
- Countersigned acceptance report with the following content:
  - New converter data (HW/FW version)
  - Changed checksum
  - Time stamp

9.9.11 Responses to safety messages

9.9.11.1 Stop responses

Requirement

Safety Integrated Functions STO and SS1 are set so that they fit the specific application.

Description of function

The converter triggers a fault reaction in response to certain events:

- Stop response Safe Channel Failure (SCF)
  In the Safety Integrated monitoring channels, the converter detects an error in the result and data comparison.
  The converter initiates an SS1 after stop response Safe Channel Failure (SCF).
  If at least one safety function is selected, then the stop response SS1 is initiated immediately.

It is not possible to select a stop response externally.

All stop responses bring the motor to a standstill.

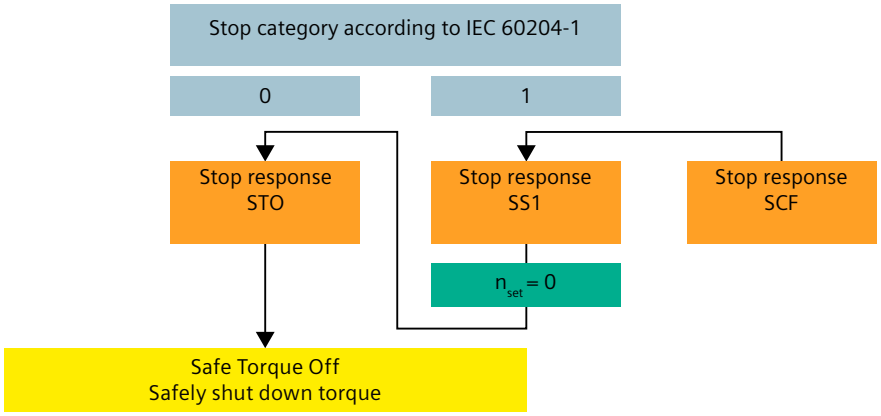

STO Safe Torque Off
SCF Safety Channel Failure

Figure 9-32 Stop responses

9.9.11.2 Fail-safe acknowledgement of safety messages

Overview

In the event of safety messages, the converter detects an internal event.

A safety message requires a fail-safe acknowledgement.

Requirement

You have checked and eliminated the cause of the internal event.

Procedure

You must acknowledge safety messages with a fail-safe signal. You have the following options for fail-safe acknowledgement:

Via selection and deselection of STO/SS1

By selecting and then deselecting STO/SS1, the safety messages are automatically withdrawn.

By switching the supply voltage off and on

Switch the power supply of the converter off and on again.

Note

Additional acknowledgement via the "standard" acknowledgement signal

Safety Integrated uses its own message type (C) by default. With p3117 you have the option of reparameterizing safety messages as Alarm (A) or Fault (F). In this case, you must additionally acknowledge the internal event with the "Standard" acknowledgement signal.

9.9.12 Response time

Technical data

The following response times are applicable for stop functions for control via terminals of the fail-safe digital input (F-DI). The response time of a stop function is the time between the selection of the stop function and the initiation of a stop response. The monitoring cycle is 4 ms by default.

Table 9-77 Technical data - Response times

Function	Unit	One Fault Delay Time	Worst Case Delay Time	Final state
STO	ms	p10017 + 3 · 4 ms + 3.5 ms	p10017 + 2 · 4 ms + 3.5 ms	STO active
SS1	ms	p10017 + 3 · 4 ms + 5.5 ms	p10017 + 2 · 4 ms + 5.5 ms	Brake ramp started

Input filter of F-DI: p10017 (factory setting: 4 ms)

Monitoring cycle: 4 ms

Note

Closing delay of the holding brake

The closing signal (low level) of the holding brake is output 20 ms after the STO is triggered.

Tuning

10

10.1 Tuning workflow

Overview

Tuning is a process of adjusting servo gains in the control loops of the converter to achieve desired performance.

Description of function

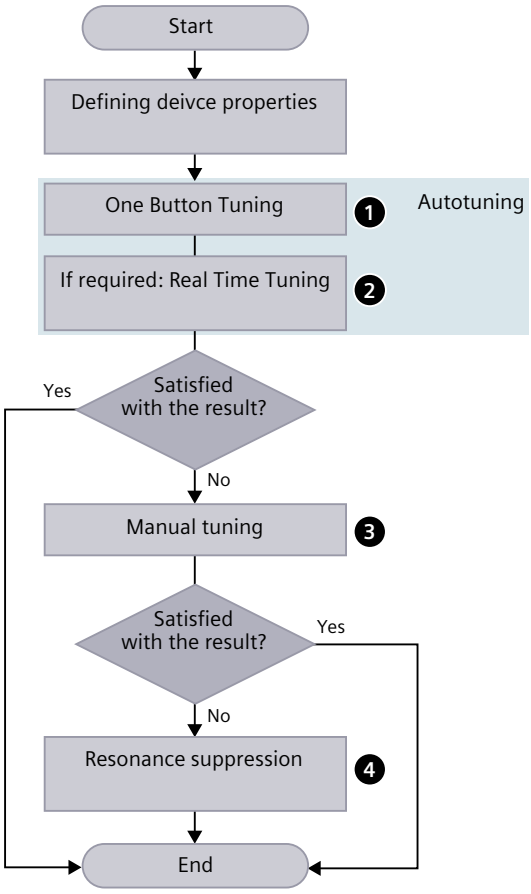

① One Button Tuning (Page 351)
② Real Time Tuning (Online Tuning) (Page 354)
③ Manual tuning (Page 357)
④ Resonance suppression (Page 367)

10.2 Autotuning

Overview

The term "Autotuning" comprises all converter-internal functions that adapt controller parameters during operation based on internal measured variables. The settings are written to the parameters, but are not saved permanently.

Description of function

Applications

The autotuning function is applicable to the following scenarios:

- Support of the commissioning
- Adaptation of the controller to major changes in the mechanical system

Available modes

The autotuning function is activated/deactivated with parameter p5300. The following autotuning modes are available for the converter:

- **One Button Tuning**
  With this procedure, the speed controller and position controller can be automatically tuned (optimized). In this regard, the servo drive system is measured once and the controller is then set.
- **Real Time Tuning**
  With this procedure, controller parameters are determined from the constantly estimated or parameterized moments of inertia.
  Deactivate Real Time Tuning as soon as the controller data has been calculated and the established values for controller optimization, as well as the filter settings have been saved in a non-volatile memory.

10.2.1 One Button Tuning

Requirement

NOTICE
Changing the controller parameters manually Manually changing controller parameters that were set automatically by One Button Tuning can result in an unstable controller and therefore material damage. • Do not change the following parameters during One Button Tuning: p0430, p1160, p1400, p1413 to p1426, p1428, p1429, p1433 to p1435, p1441, p1460 to p1465, p1498, p1513, p1656 to p1676, p2533 to p2539, p2567, p2572, p2573, p5280, p29174, p29175, p29176, p29178

Procedure

Proceed as follows to perform One Button Tuning with your operating unit:

1. Configure the dynamic response setting (p5292).
   The higher the dynamic factor, the faster and more unstable the control. You should find a desired dynamic factor within a resonance-free range.
2. Set the traversing distance for the test signal (p5308).
   Generally, longer traversing distances result in better tuning results.
   The traversing distance of the motor equals to the distance of the test signal (p5308) plus the distance generated from the configured setpoint. For example, if you have configured a valid speed setpoint (other than 0 rpm) via the control panel, the actual traversing distance of the motor equals to the distance of the test signal (p5308) plus the distance traversed by the motor at the set velocity.

3. Configure the One Button Tuning function (p5301).
   The following settings are possible:

Bit	Explanation
00	Determining the speed controller gain: • The speed controller gain is determined and set with the aid of a noise signal.
01	Determining the current setpoint filter: • Any required current setpoint filters are determined and set with the aid of a noise signal. In this way, a higher dynamic response can be achieved in the speed control loop.
02	Determining the moment of inertia: • The moment of inertia is determined and set with the aid of a test signal. • Requirements: – Distance limiting has been set in p5308. – The duration of the test signal has been set in p5309. • If this bit is not set, the moment of inertia must be set manually in p1498.
07	Activating synchronized axes: • Activation of this function is required for interpolating axes. • With this function, the axes are adapted to the dynamic response set in p5275. The time in p5275 should be set with the lowest dynamic response in accordance with the axis.
08	Determining the moment of inertia from the frequency response: • With this function, the moment of inertia is determined from the frequency response using a test signal. When bit 02 is inactive, the moment of inertia is transferred to p1498. • To determine the moment of inertia with greater accuracy, we recommend setting the traversing distance via p5308 before the measurement.

4. Set the controllers via p5271.
   The following table shows only the commonly used bits:

Bit	Explanation
03	Activates speed precontrol • Only relevant for PTI positioning.
04	Activates torque precontrol • If p29166 = 1 (default setting), then the torque precontrol of the speed controller is used (r0341, p1498). • If p29166 = 2, then the torque precontrol of the position controller is used (r0341, p1498). The automatic calculation of the torque precontrol depends primarily on the settings of p1498.

   For more information about p5271, see Section "Parameter list (Page 651)".

5. Activate the One Button Tuning function (p5300 = 1).

More information

For the detailed One Button Tuning procedures in the web server, see Section "Optimization (Page 199)".

Parameters

The following list includes the parameters of the "One Button Tuning" function.

Number	Name	Unit
p0977	Save all parameters	
p5271[0].0...7	Real Time / One Button Tuning configuration	
p5292	FFT tuning dynamic factor	[%]
p5300[0]	Autotuning selection	
p5301[0].0...8	One Button Tuning configuration 2	
p5308[0]	One Button Tuning distance limiting	[°]
p29166	FPC torque precontrol mode	

10.2.2 Real Time Tuning (Online Tuning)

Requirement

NOTICE
Changing the controller parameters manually Manually changing controller parameters that were set automatically by Real Time Tuning can result in an unstable controller and therefore material damage. • Do not change the following parameters during Real Time Tuning: p0430, p1160, p1400, p1413 to p1426, p1428, p1429, p1433 to p1435, p1441, p1460 to p1465, p1498, p1513, p1656 to p1676, p2533 to p2539, p2567, p2572, p2573, p5280, p29174, p29175, p29176, p29178

Procedure

Proceed as follows to perform Real Time Tuning with your operating unit:

1. Configure the Real Time Tuning function (p5302).
   The following settings are possible:

Bit	Explanation
02	The moment of inertia is determined using the inertia estimator. If this bit is not set, the load moment of inertia must be parameterized manually in p1498. The test signal must have been previously set in p5308 and p5309.
03	If "Once" is set, the inertia estimator is deactivated after successful determination of the moment of inertia by p1498. The parameters must then be saved in non-volatile memory (p0977 = 1).
	If "Cyclically" is parameterized, the moment of inertia is determined continuously and the controller parameters are adapted. As soon as the moment of inertia has been successfully established (r1407.26 = 1), we recommend saving the parameters. The necessity for resettling of the controllers following a POWER ON will thus be avoided.
06	The function current setpoint filter adaptation is enabled. This function can be useful for damping a variable resonance in the mechanical system.
07	The axes are adapted to the dynamic response set in p5275. This setting is required for interpolating axes. Recommendation: Set the time in p5275 according to the axis with the lowest dynamic response.

2. Set the controllers via p5271.
   The following table shows only the commonly used bits:

Bit	Explanation
03	Activates speed precontrol • Only relevant for PTI positioning.
04	Activates torque precontrol • If p29166 = 1 (default setting), then the torque precontrol of the speed controller is used (r0341, p1498). • If p29166 = 2, then the torque precontrol of the position controller is used (r0341, p1498). The automatic calculation of the torque precontrol depends primarily on the settings of p1498.

   For more information about p5271, see Section "Parameter list (Page 651)".

3. Activate Real Time Tuning (p5300 = 2). Run the drive system to start tuning.

4. If Real Time Tuning cannot achieve desired tuning results, adjust the Real Time Tuning dynamic factor (p5272); otherwise, skip this step.
   The speed controller gain Kp is proportional to both the moment of inertia and the dynamic factor p5272. Higher dynamic factor makes the speed control more sensitive to vibrations but less stable. Set a desired dynamic factor within a resonance-free range.
5. To save the determined values for speed and position controllers, save the parameters in a non-volatile memory (RAM to ROM or p0977 = 1).
   In this way, the start values for Real Time Tuning are retained, for example, after POWER ON. Through deactivation and reactivation of Real Time Tuning, the estimated load moment of inertia and the load torques are reset.

Note

When the Fast PTI function is active, operating the motor during Real Time Tuning may trigger fault F52940 due to inappropriate initial closed-loop control gains. To avoid the occurrence of this fault, temporarily set p29294 to 0 or set it to a value greater than the current value. Before saving the Real Time Tuning relevant parameters, change p29294 back to the value suitable for your particular application.

Note

If you want to minimize the vibrations of the mechanical system while keeping a high dynamic factor, perform One Button Tuning or manually configure current setpoint filters before Real Time Tuning; otherwise, proceed and activate current setpoint filter adaptation (p5302.6) during Real Time Tuning configuration. For more information about resonance suppression methods, see Section “Resonance suppression (Page 367)”.

Parameters

The following list includes the parameters of the "Real Time Tuning" function.

Number	Name	Unit
p0977	Save all parameters	
p5271[0].0...7	Real Time / One Button Tuning configuration	
p5272[0]	Real Time Tuning dynamic factor	[%]
p5300[0]	Autotuning selection	
p5302[0].2...8	Real Time Tuning configuration	
p29294	Following error monitoring threshold	

10.3 Manual tuning

Overview

When the autotuning function cannot achieve your expected tuning results, you can manually perform tuning.

Description of function

To perform tuning manually, you can disable the autotuning function by setting the parameter p5300:

- p5300 = -1: The autotuning function is disabled and the default values for the speed and position controller are restored.
- p5300 = 0: The autotuning function is disabled and the existing controller parameters are not changed.
  To store the determined values for the speed and position controller retentively, set p0977 = 1 or execute the "Copy RAM to ROM" command.

10.3.1 Control loops

Description

The converter consists of three control loops:

- Current control loop
- Speed control loop
- Position control loop

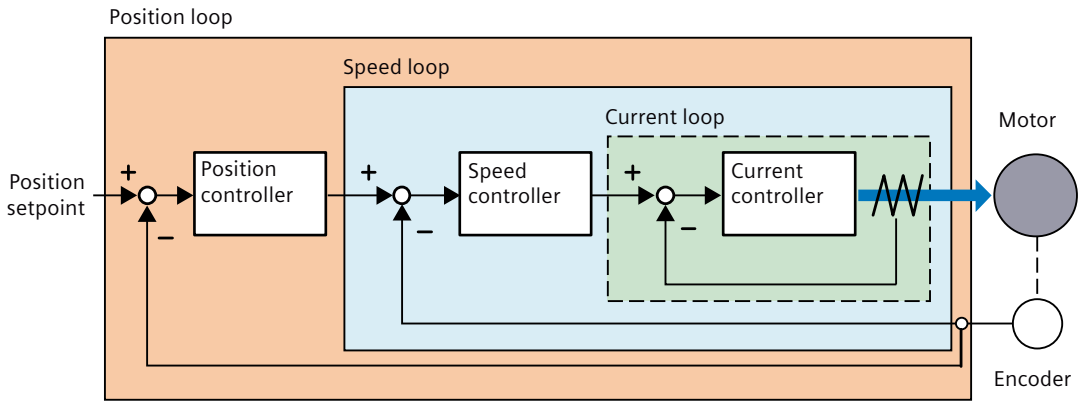

The control loops monitor the feedback of the controlled machines and correct the commands given to the converter.

In theory, frequency width of the inside control loop must be wider than that of the outer control loop; otherwise, the whole control system might vibrate or show low responsiveness. The relationship between the frequency widths of these three control loops is as follows:

Current loop > speed loop > position loop

10.3.2 Servo gain adjustment

Overview

You can set the loop servo gains in the control loops to optimize the responsiveness of a machine.

The servo gains are set through a combination of parameters. These parameters influence each other so you must consider the balance between the set values when tuning.

Description of function

Generally, the responsiveness of a machine with high rigidity can be improved by increasing the servo gains; however, if the servo gains of a machine with low rigidity are increased, the machine may vibrate and the responsiveness cannot be improved.

Since the current loop gain is automatically set by the system according to the detected motor data, you can adjust the following control parameters for servo gain adjustment:

- **Position loop gain**
  The position loop gain directly influences the responsiveness of the position loop. If the mechanical system does not vibrate or produce noises, you can increase the position loop gain to increase the responsiveness of the position loop and shorten the positioning time.
- **Position loop feed forward gain**
  You can slowly increase the position loop feed forward gain to increase the responsiveness and reduce the position deviation.
  An inappropriately high position loop feed forward gain may lead to overshoots in the motor speed and a repeated ON/OFF switch of the digital output signal INP.
- **Speed loop gain**
  The speed loop gain directly influences the responsiveness of the speed loop. If the mechanical system does not vibrate or produce noises, you can increase the speed loop gain to increase the responsiveness of the speed loop.
- **Speed loop integral time**
  With the integral component added to the speed loop, the converter can eliminate the steady-state error of speed and respond to small speed changes.
  If the mechanical system does not vibrate or produce noises, you can decrease speed loop integral time to increase the system rigidity.
  For mechanical systems with a resonance factor or a high load inertia ratio, you can increase the speed loop integral time to suppress resonance.

Parameters

The following list includes the parameters of the "Servo gain adjustment" function.

Number	Name	Unit
p1460[0]	Speed controller P gain	[Nms/rad]
p1462[0]	Speed controller integral time	[ms]
p2534[0]	LR speed precontrol factor	[%]
p2538[0]	LR proportional gain	[1000 rpm]
p29174	FPC speed precontrol factor	[%]
p29178	FPC proportional gain	[1000 rpm]

10.4 Gain switching

Overview

The function of gain switching is used to switch between two sets of scaling factors.

With the gain switching function, you can implement the following operations:

- Increase the gains during servo lock and decrease gains to reduce noise during rotation.
- Increase the gains during settling to shorten the stop settling time.
- Ensure the stability of the servo system when the load inertia moment ratio varies greatly during a stop.

Note

Set the scaling factors according to the following formulas to obtain expected servo gains:

- Position loop gain = p29178*p29110 (fast PTI mode)
- Speed loop gain = p1460*p29120
- Speed loop integral time = p1462/p29121

Requirement

- Do not use the function in the torque control mode.
- Disable the functions of autotuning.

Description of function

The function of gain switching is disabled by default (p29130 = 0), and only scaling factor 1 is valid in this case.

Four switching modes with different conditions are available.

- **Using digital input signal (G-CHANGE) (p29130 = 1)**

Signal	Pin assignment	Setting	Description
G-CHANGE	X132-5	0	Scaling factor 1 is selected.
		1	Scaling factor 2 is selected.

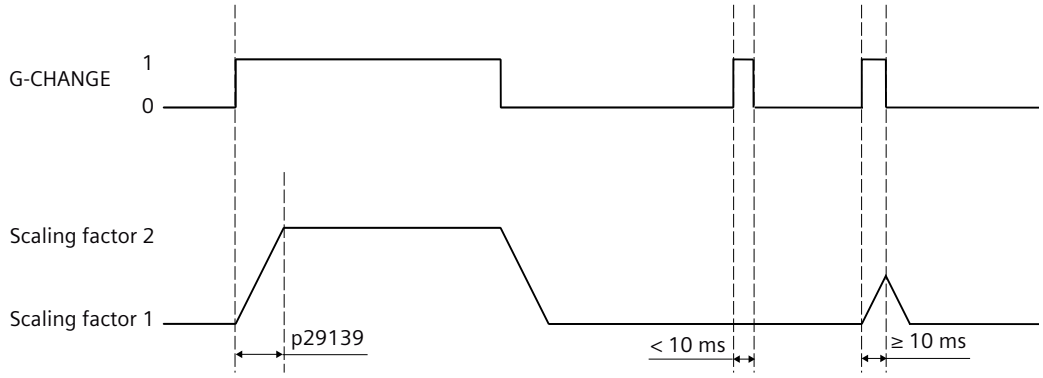

Note

If the pulse duration is shorter than 10 ms, the scaling factor remains unchanged.

- **Using position deviation (p29130 = 2)**
  In the fast PTI mode, if the position deviation is less than the preset value (p29131), scaling factor 1 is selected; if the position deviation is greater than the value, scaling factor 2 is selected.

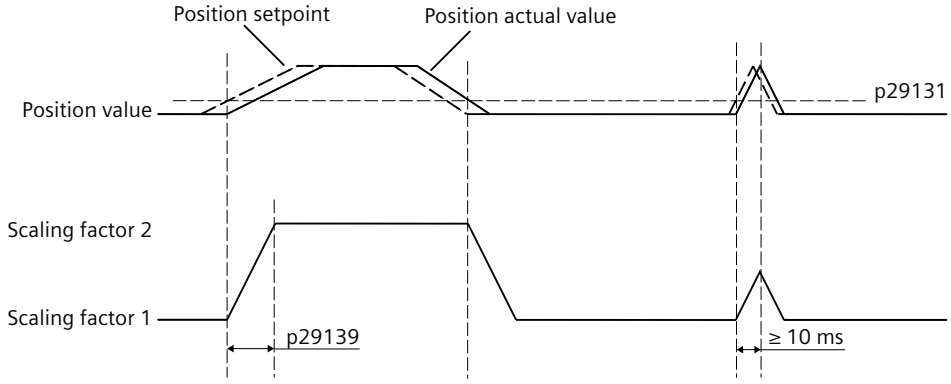

- **Using position setpoint frequency (p29130 = 3)**
  In the fast PTI mode, if the pulse train input is lower than the preset value (p29132), scaling factor 1 is selected; if the pulse train input is greater than the value, scaling factor 2 is selected.

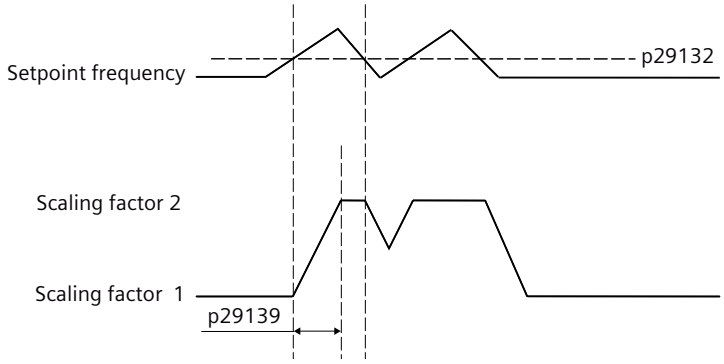

- **Gain switching using actual speed (p29130 = 4)**
  In the S mode, if the actual speed is less than the preset value (p29133), scaling factor 1 is selected; if the actual speed is greater than the value, scaling factor 2 is selected.

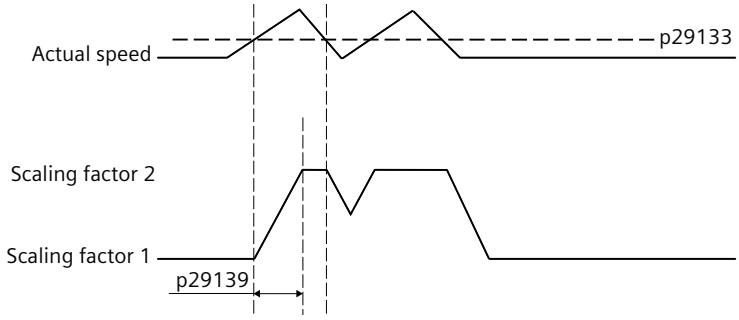

Parameters

The following list includes the parameters of the "Gain switching" function.

Number	Name	Unit
p5300[0]	Autotuning selection	
p29110[0...1]	Position loop gain scaling	[%]
p29120[0...1]	Speed loop gain scaling	[%]
p29121[0...1]	Speed loop integral time scaling	[%]
p29130	Gain switching mode selection	
p29131	Gain switching condition: Pulse deviation	
p29132	Gain switching condition: Position setpoint frequency	
p29133	Gain switching condition: Actual speed	[rpm]
p29139	Gain switching time constant	[ms]

10.5 PI/P switching

Overview

The function of PI/P switching is used to switch from PI (Proportional/Integral) control of the speed controller to P (Proportional) control.

With the function of PI/P switching, you can implement the following operations:

- Avoid overshooting of actual speed value during acceleration or deceleration.
- Shorten the position settling time.
- Avoid unnecessary torque when the target position is at a mechanical limitation.

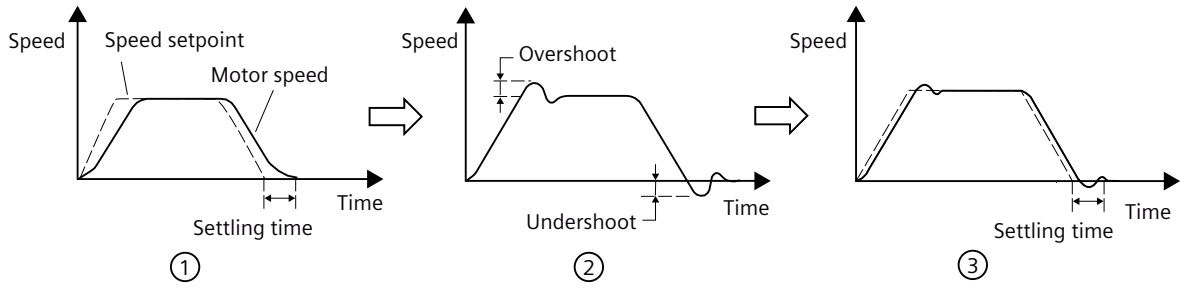

① Without tuning
② Speed loop gain increased
③ Speed loop gain increased + PI/P switching

Requirement

- Do not use the function in the torque control mode.
- Disable the functions of autotuning and gain switching.

Description of function

The function of PI/P switching is disabled by default (p29140 = 0). Five switching modes with different conditions are available.

- **Using torque setpoint (p29140 = 1)**
  When torque setpoint is greater than the preset value (p29141), P control is selected; when torque setpoint is less than the value, PI control is selected.

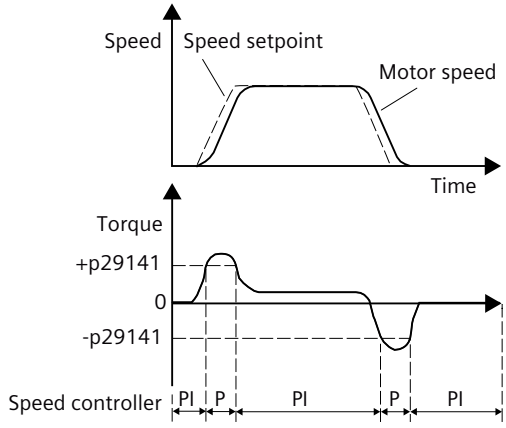

- **Using an external digital input signal (G-CHANGE) (p29140 = 2)**

Signal	Pin assignment	Setting	Description
G-CHANGE	X132-5	0	PI control is selected.
		1	P control is selected.

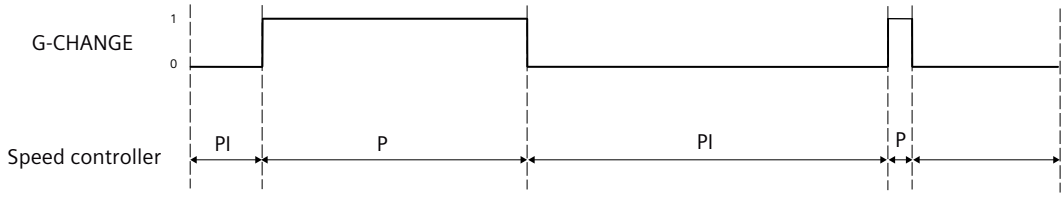

- **Using speed setpoint (p29140 = 3)**
  When the speed setpoint is greater than the preset speed value (p29142), P control is selected; when the speed setpoint is less than the value, PI control is selected.

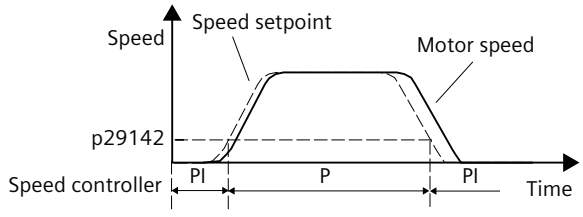

- **Using acceleration setpoint (p29140 = 4)**
  When the motor acceleration is greater than the preset value (p29143), P control is selected; when the motor acceleration is less than the value, PI control is selected.

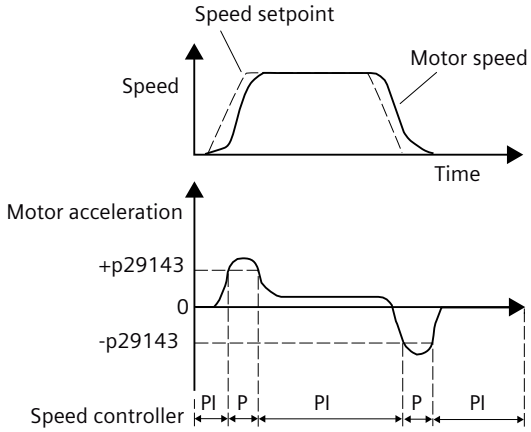

- **Using pulse deviation (p29140 = 5)**
  When the pulse deviation is greater than the preset value (p29144), P control is selected; whent the pulse deviation is less than the value, PI control is selected.

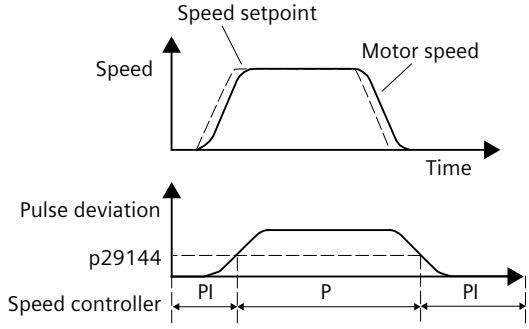

More information

For more information about the following settings, see corresponding sections:

- Speed setpoint: Speed setpoint (Page 306)
- Torque setpoint: Torque setpoint (Page 318)

Parameters

The following list includes the parameters of the "PI/P switching" function.

Number	Name	Unit
p5300[0]	Autotuning selection	
p29130	Gain switching mode selection	
p29140	PI/P switching mode selection	
p29141	PI/P switching condition: Torque	[%]
p29142	PI/P switching condition: Actual speed	[rpm]

p29143	PI/P switching condition: Acceleration	[rev/s²]
p29144	PI/P switching condition: Pulse deviation	

10.6 Resonance suppression

Overview

The resonance suppression functions suppresses mechanical resonance at a frequency higher than 100 Hz.

The function is achieved by setting the current setpoint filters as bandstop filters. Four current setpoint filters are available for the converter.

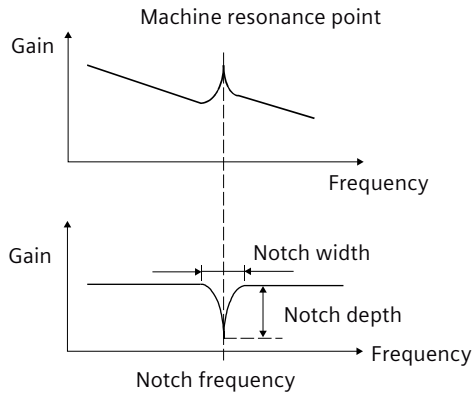

Figure 10-1 Working principle of a bandstop filter

Description of function

Resonance suppression with autotuning

During the autotuning process, resonance suppression is activated by default.

- Resonance suppression with One Button Tuning (p5300 = 1, p5291.1 = 1)
  The current setpoint filters are automatically determined and set once with the aid of a noise signal. Four current setpoint filters can be activated at most after One Button Tuning is completed.
- Resonance suppression with Real Time Tuning (p5300 = 2, p5302.6 = 1)
  Filter 4 is automatically parameterized as a bandstop filter and activated as an adaptive resonance filter. To use the other three current setpoint filters in this case, you must manually configure their settings.
  When there is no resonance in the machine, Siemens recommends that the resonance suppression function is deactivated (p5302.6 = 0) in Real Time Tuning to get a high dynamic performance.

Resonance suppression with manual tuning

When resonance suppression with autotuning cannot reach the suppression effect, you can proceed as follows to suppress the resonance manually:

1. Activate the current setpoint filters that you want to use (p1656[0].0...3).
2. For the activated current setpoint filters, parameterize the following values:
   - Type: general 2nd order filter
   - Denominator natural frequency
   - Denominator damping
   - Numerator natural frequency
   - Numerator damping

Note

Assume the notch frequency is $\mathbf{f}_{sp}$, notch width is $\mathbf{f}_{BB}$, and notch depth is **K**, then the filter parameters can be calculated as follows:

- Denominator natural frequency = Numerator natural frequency = $\mathbf{f}_{sp}$
- Denominator damping = $\mathbf{f}_{BB}/(2 \times \mathbf{f}_{sp})$
- Numerator damping = $(\mathbf{f}_{BB} \times 10^{(k/20)})/(2 \times \mathbf{f}_{sp})$

Parameters

The following list includes the parameters of the "Resonance suppression" function.

Number	Name	Unit
p1656[0].0...3	Activates current setpoint filter	
p1657[0]	Current setpoint filter 1 type	
p1658[0]	Current setpoint filter 1 denominator natural frequency	[Hz]
p1659[0]	Current setpoint filter 1 denominator damping	
p1660[0]	Current setpoint filter 1 numerator natural frequency	[Hz]
p1661[0]	Current setpoint filter 1 numerator damping	
p1662[0]	Current setpoint filter 2 type	
p1663[0]	Current setpoint filter 2 denominator natural frequency	[Hz]
p1664[0]	Current setpoint filter 2 denominator damping	
p1665[0]	Current setpoint filter 2 numerator natural frequency	[Hz]
p1666[0]	Current setpoint filter 2 numerator damping	
p1667[0]	Current setpoint filter 3 type	
p1668[0]	Current setpoint filter 3 denominator natural frequency	[Hz]
p1669[0]	Current setpoint filter 3 denominator damping	
p1670[0]	Current setpoint filter 3 numerator natural frequency	[Hz]
p1671[0]	Current setpoint filter 3 numerator damping	
p1672[0]	Current setpoint filter 4 type	
p1673[0]	Current setpoint filter 4 denominator natural frequency	[Hz]
p1674[0]	Current setpoint filter 4 denominator damping	
p1675[0]	Current setpoint filter 4 numerator natural frequency	[Hz]
p1676[0]	Current setpoint filter 4 numerator damping	

p5291.0...16	FFT tuning configuration
p5302[0].2...8	Real Time Tuning configuration

System messages

11

11.1 SDI Status

11.1.1 SDI Status overview

Description

The SINAMICS S200 converter product line is designed with a SINAMICS SDI (Smart Drive Interface) Status panel behind the front flap of the converter.

To access the panel, gently lift the front flap from the lower right corner.

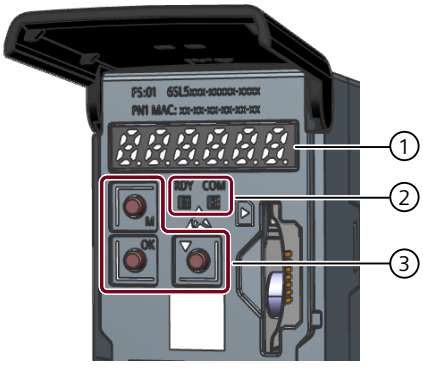

① 6-digit 7-segment display
② LED display
③ Function buttons

Figure 11-1 SDI Status layout

You can use the SDI Status panel for the following operations:

- Monitoring
  The SINAMICS SDI Status enters the monitoring mode when the servo state changes from OFF to ON. In this mode, it displays the actual speed, actual torque, actual position, actual DC link voltage, and position following error. You can press the DOWN button to navigate to the next item.
- Diagnostics
  The SINAMICS SDI Status enters the diagnostics mode when a new fault, alarm, or safety message appears. You can press the OK button to acknowledge the faults after eliminating the causes.
  You can press the M button to switch between the monitoring mode and the diagnostics mode.

  Note

  If you failed to configure UMAC as required, A01637 will be triggered. In this case, the monitoring mode does not switch to the diagnostics mode automatically unless you press the M button. To exit the diagnostics mode, press the M button again.

- Converter restart
  You can press the key combination of the M button and the OK button for four seconds to restart the converter.

11.1.2 Status display via LEDs

Description

The following tables explain the LED icons and states:

Table 11-1 Explanation of LED icons

LED	Explanation
	LED is ON.
	LED is OFF.
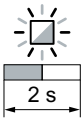	LED flashes slowly.
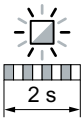	LED flashes quickly.
	LED flashes with variable frequency.

LED	Explanation
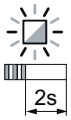	LED flashes in alternating order 3 times quickly - 2 s pause - ...
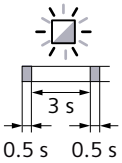	LED flashes briefly every 3 s

Table 11-2 Signal states of RDY and COM LEDs during converter ramp-up and operation

RDY	COM	Description	Remedy
 Orange	 Orange	Possible causes: • Temporary state after the supply voltage is switched on • Restart	-
 Green	 Green	Temporary state after the supply voltage is switched on: firmware being loaded and initialized.	-
Not rele-vant	 Green	Cyclic communication in progress	-
□	 Red	No fieldbus connection: • No data exchange or configuration error • Data exchange lost • Data exchange in progress, but there are no setpoints (controller in stop state)	Possible remedies: • Check message display and rectify cause of fault. • Check operating mode of controller (PLC).
 Red	□	Possible causes: • Converter signals a fault. • Firmware error	Possible remedy: Check message display, rectify cause of fault.
 Green	Not rele-vant	Converter is ready for operation and error-free.	-

RDY	COM	Description	Remedy
□	Red	Possible causes: • BIOS error: – General error – Loading error • File error: – Memory card is not available or is faulty. – File corrupt • CRC error	Possible remedies: • Switch the converter supply voltage off and on. • Check memory card if available. • Reload firmware. • Contact Hotline/Support.
Orange	Not relevant	Converter detection via DCP flashing	-
Orange	□	Commissioning or restore factory settings via commissioning tool	-

Table 11-3 Signal states of RDY and COM LEDs during firmware update

RDY	COM	Description	Remedy
Green	Green	Firmware update in progress	-
□	Red	Firmware update signals an error.	Possible remedies: • Switch the converter supply voltage off and on, and repeat the firmware update. • Firmware update via memory card: Replace memory card and repeat firmware update. • Contact Support/Hotline.
Green	□	Firmware update is completed. The converter is waiting.	Switch the converter supply voltage off and on.

Table 11-4 Signal states of RDY and COM LEDs during full reset to factory settings

RDY	COM	Description	Remedy
Green	Green	All user-defined settings are being reset to factory settings.	-
Green		All user-defined settings have been reset to factory settings.	Switch the converter supply voltage off and on.
	Red	Reset of all user-defined settings to factory settings is unsuccessful.	Possible remedies: • Check the memory card with the empty file called RESET.TXT • Switch off and switch on the converter supply voltage and reset all user-defined settings to the factory setting. • Contact Support/Hotline.

Please contact Technical Support for LED states that are not described above.

11.1.3 SDI Status display

Description

Note

The SDI Status displays the values in a 32-bit floating-point format, with a maximum of seven effective digits.

Display	Example	Description	Remarks
S 200	S 200	Converter is in initialization state	-
-xxxxx	- - - - - -	Converter is in startup state	The illuminated "-" symbols indicate the startup progress. Once all the "-" symbols are lit, the startup process is complete.
L24	L 24	24 V DC supply voltage is too low.	"L24" appears when the voltage (including transient voltage) of the external 24 V DC power supply drops below required voltage under normal converter operation. Remedy: Check the external 24 V DC power supply and restart the converter.
Fxxxxx	F 7955	Fault code	In the case of a single fault

Display	Example	Description	Remarks
F.xxxxx.	F. 7955.	Fault code of the first fault	In the case of multiple faults
Fxxxxx.	F 7955.	Fault code	In the case of multiple faults
Axxxxx	A30016	Alarm code	In the case of a single alarm
A.xxxxx.	A.30016.	Alarm code of the first alarm	In the case of multiple alarms
Axxxxx.	A30016.	Alarm code	In the case of multiple alarms
Cxxxxx	C 1600	Safety message code	In the case of a single safety message
C.xxxxx.	C. 1600.	Safety message code of the first safety message	In the case of multiple safety messages
Cxxxxx.	C 1600.	Safety message code	In the case of multiple safety messages
S Off	S oFF	Operating display: servo-off	-
r xxx	r 40	Actual speed (positive direction)	-
r -xxx	r -40	Actual speed (negative direction)	-
T x.x	t 0.4	Actual torque (positive direction)	-
T -x.x	t -0.4	Actual torque (negative direction)	-
P.xxxxx	P. 13427	Actual position (positive direction)	The digits are not fully displayed. Press the DOWN button to scroll to the next page.
Px.xxxx	P1.3427	Actual position (positive direction)	The remaining digits have been fully displayed.
P.-xxxx	P. -1342	Actual position (negative direction)	The digits are not fully displayed. Press the DOWN button to scroll to the next page.
Px.xxxx	P1.3427	Actual position (negative direction)	The remaining digits have been fully displayed.
DCxxx.x	dC549.0	Actual DC link voltage	-
E.xxxxx	E.18531	Position following error (positive direction)	The digits are not fully displayed. Press the DOWN button to scroll to the next page.
Ex.xxxx	E1.8531	Position following error (positive direction)	The remaining digits have been fully displayed.
E.-xxxx	E.-1853	Position following error (negative direction)	The digits are not fully displayed. Press the DOWN button to scroll to the next page.
Ex.xxxx	E1.8531	Position following error (negative direction)	The remaining digits have been fully displayed.

Display	Example	Description	Remarks
Restart	rStArt	Restart the converter	-
P-----	P -----	The parameter does not exist.	The symbol "P" could be other parameter symbols, like "T", "E", etc.

11.1.4 Function buttons

Description

Button	Description	Functions
M	M button	Switch between the diagnostics mode and the monitoring mode
OK	OK button	Acknowledge faults in the diagnostics mode
▼	DOWN button	Navigate to the next item
OK + M	Press the key combination for four seconds to restart the converter[1)]	

[1)] The converter cannot be restarted with this key combination when it is in the “servo-on” state.

11.2 System runtime

Overview

By evaluating the system runtime of the converter, you can decide when you should replace components (such as fans and motors) subject to wear in time before they fail.

Description of function

The system runtime starts once the power supply of the converter is switched on. The system runtime stops when the power supply is switched off.

The system runtime includes r2114[0] (milliseconds) and r2114[1] (days). It is calculated as follows:

System runtime = r2114[1] × days + r2114[0] × milliseconds

If r2114[0] has reached a value of 86400000 ms (24 hours), r2114[0] is set to the value 0 and the value of r2114[1] is increased by 1.

You cannot reset the system runtime.

Parameters

The following list includes the parameters of the "System runtime" function.

Number	Name	Unit
r2114[0...1]	System runtime total	

11.3 Faults and alarms

11.3.1 Overview of faults and alarms

Description

Definitions

A message includes a letter and a relevant number.

The letters have the following meaning:

- A means "Alarm"
- F means "Fault"
- N means "No message" or "Internal message"
- C means "Safety message"
  In the delivery state (p3117 = 0), safety messages correspond to message type "C" and the safety message buffer is active. With p3117 = 1, safety messages correspond to the message types "A" or "F" and are stored in the fault buffer or the alarm buffer.

Differences between faults and alarms

An alarm reports an operating state which is non-critical at present. A fault means that it is normally no longer possible to run the motor. The converter therefore responds to alarms and faults differently.

Table 11-5 Differences between faults and alarms

Type	Description
Faults	How does a converter respond when a fault occurs? • Initiate the appropriate fault reaction. • Set the status signal ZSW1.3. • Enter the fault into the fault buffer. How are faults eliminated? • Remove the cause of the fault. • Acknowledge the fault. What happens when the converter is switched off and switched on? • Faults are saved retentively.
Alarms	How does a converter respond when an alarm occurs? • Set the status signal ZSW1.7. • Enter the alarm into the alarm buffer. How are alarms eliminated? • Alarms are self-acknowledging. If the cause of the alarm is no longer present, the converter resets the alarm. What happens when the converter is switched off and switched on? • The alarm buffer is lost when the supply voltage is switched off.

Note:

Messages from encoders whose signal is not used for control purposes are output by the converter as a warning.

11.3.2 Faults

Overview

A fault indicates that the reliable operation of the motor by the converter is at risk.

Description of function

Properties of faults

Faults have the following properties:

- Faults may cause the motor to be switched off.
- Faults must be acknowledged.
- Faults are displayed as follows:
  - On the converter via the LEDs
  - On the SINAMICS SDI Status panel via the 6-digit 7-segment display
  - In the web server
    You can find more information on the display of faults in Section "Messages (Page 207)".

Acknowledge faults

You need to resolve the cause of the fault before you can acknowledge it.

To acknowledge a fault, you have the following options:

- Acknowledging via the OK button on the SINAMICS SDI Status panel
- Switching off the converter power supply and switch on again
- Acknowledging via the web server
- The Safety Integrated fault is acknowledged by selecting and then deselecting the STO or SS1 function.

You can only acknowledge faults detected by the internal converter monitoring of hardware and firmware by switching the supply voltage off and on again. In the list of faults, you will find the information on limitations when acknowledging at the corresponding fault codes.

More information

You can find more information on faults in Section "Overview of faults and alarms (Page 379)".

11.3.3 Alarms

Overview

An alarm indicates that the reliable operation of the motor by the converter is at risk.

Description of function

Properties of alarms

Alarms have the following properties:

- Incoming alarms have no direct influence on the drive system.
- When the cause is eliminated, the alarm is no longer displayed.
- Alarms do not have to be acknowledged.
- Alarms are displayed as follows:
  - On the converter via the LEDs
  - On the SINAMICS SDI Status panel via the 6-digit 7-segment display
  - In the web server
    You can find more information on the display of alarms in Section "Messages (Page 207)".

Alarm code or alarm value describe the cause of the alarm.

More information

You can find more information on alarms in Section "Overview of faults and alarms (Page 379)".

11.3.4 Explanation of the list of faults and alarms

Overview

The representation of a message includes as a maximum the information listed below. Depending on the message, some information can be omitted.

The messages are displayed according to the following pattern:

Fxxxxx (A, N)	**Fault location (optional): Name**
Message class:	Text of the message class (number according to PROFIdrive)
Message value:	Component number: %1, fault cause: %2
Variant:	Product variant
Component:	Hardware component
Response:	NONE
Acknowledgment:	POWER ON
Explanation of the message value:	For %2

Value	Cause	Remedy
11	Fault cause for value = 11	Remedy for value = 11
15	Fault cause for value = 15	Remedy for value = 15

Cause:	Description of possible causes. Fault value (r0949, interpret <format>): or alarm value (r2124, interpret <format>): (optional) Information about fault and alarm values (optional).
Remedy:	Description of possible remedies
Response upon A:	NONE
Acknowl. upon N:	IMMEDIATELY
Response upon N:	NONE
Acknowl. upon N:	NONE

Description of function

Fxxxxx (A, N)

A message comprises a letter followed by the relevant number.

The meaning of the letters is as follows:

- A means "Alarm"
- F means "Fault"
- N means "No message" or "Internal message"
- C means "Safety message" (dedicated message buffer)

The optional brackets indicate whether the type specified for this message can be changed and which message types can be adjusted via parameters (p2118, p2119).

For a message with a message type that can be changed, information about response and acknowledgment is specified independently (e.g. response upon F, acknowledgment upon F).

Fault location (optional): Name

The fault location (optional), the name of the fault or alarm and the message number are all used to identify the message (e.g. with the commissioning software).

Message class

Every message is assigned a message class using the following structure:

Text of the message class (number according to PROFIdrive)

The message classes are transferred at different interfaces to higher-level control systems and their associated display and operating units.

The message classes that are available are listed in the following table. In addition to the text of the message class and its number according to PROFIdrive – as well as a brief help text regarding the cause and remedy – they also include information about the various diagnostic interfaces:

- PN (hex)
  Specifies the "Channel error type" of the PROFINET channel diagnostics.
  When activating the channel diagnostics, using the GSDML file, the texts listed in the table can be displayed.
- DS1 (dec)
  Specifies the bit number in data set DS1 of the diagnostic alarm for SIMATIC S7.
  When the diagnostic alarms are activated, the texts listed in the table can be displayed.

Table 11-6 Message classes and coding of various diagnostic interfaces

Text of the message class	**Number according to PROFIdrive**	**Diagnostics interface**	
Cause and remedy		**PN (hex)**	**DS1 (dec)**
Hardware/software fault A hardware or software malfunction was detected. • Carry out a POWER ON for the relevant component. • If it occurs again, contact the hotline. • Replace device.	(1)	9000	0
Line fault A line supply fault has occurred (phase failure, voltage level...). • Check the line supply/fuses. • Check the supply voltage. • Check the wiring.	(2)	9001	1
Supply voltage fault An electronics supply voltage fault (48 V, 24 V, 5 V...) was detected. • Check the wiring. • Check the voltage level.	(3)	9002	2
DC link overvoltage The DC link voltage has assumed an inadmissibly high value. • Check the dimensioning of the system (line supply, reactor, voltages). • Check the infeed settings.	(4)	9003	3
Power electronics fault An inadmissible operating state of the power electronics has been identified (overcurrent, overtemperature, IGBT failure...). • Check that the permissible duty cycles are complied with. • Check the ambient temperatures (fan).	(5)	9004	4

Text of the message class	Number according to PROFIdrive	Diagnostics interface	
Cause and remedy		**PN (hex)**	**DS1 (dec)**
Electronic component overload The temperature in the component has exceeded the highest permissible limit. • Check the ambient temperature /control cabinet cooling.	(6)	9005	5
Ground fault/inter-phase short-circuit detected A ground fault/interphase short-circuit was detected in the power cables or in the motor windings. • Check the power cables (connection). • Check the motor.	(7)	9006	6
Motor overload The motor was operated outside the permissible limits (temperature, current, torque...). • Check the duty cycles and set limits. • Check the ambient temperature/motor cooling.	(8)	9007	7
Communication error to the higher-level controller The communication to the higher-level controller (internal coupling, PROFIBUS, PROFINET...) is faulted or interrupted. • Check the state of the higher-level control system. • Check the communication connection/wiring. • Check the bus configuration/clock cycles.	(9)	9008	8
Safety monitoring channel has identified an error A safe operation monitoring function (Safety) has detected an error.	(10)	9009	9
Actual position value/actual speed value incorrect or not available An illegal signal state was detected while evaluating the encoder signals (track signals, zero marks, absolute values...). • Check the encoder/status of the encoder signals. • Observe the maximum permissible frequencies.	(11)	900A	10
Internal (DRIVE-CLiQ) communication error The internal communication between the SINAMICS components is faulted or interrupted. • Check the DRIVE-CLiQ wiring. • Ensure an EMC-compliant design. • Observe the maximum quantity structure/cycles.	(12)	900B	11
Infeed fault The infeed is faulted or has failed. • Check the infeed and its environment (line supply, filters, reactors, fuses...). • Check the infeed control.	(13)	900C	12

Text of the message class	Number according to PROFIdrive	Diagnostics interface	
Cause and remedy		**PN (hex)**	**DS1 (dec)**
Braking controller/Braking Module faulted The internal or external Braking Module is faulted or overloaded (temperature). • Check the connection/state of the Braking Module. • Comply with the permissible number of braking operations and their duration.	(14)	900D	13
Line filter faulted The line filter monitoring has identified an excessively high temperature or other inadmissible state. • Check the temperature/temperature monitoring. • Check the configuration to ensure that it is permissible (filter type, infeed, thresholds).	(15)	900E	14
External measured value/signal state outside of the permissible range A measured value/signal state read in via the input area (digital/analog/temperature) has assumed an inadmissible value/state. • Determine and check the relevant signal. • Check the set thresholds.	(16)	900F	15
Application/technology function faulted The application/technological function has exceeded a (set) limit (position, speed, torque...). • Determine and check the relevant limit. • Check the setpoint specified by the higher-level controller.	(17)	9010	16
Error in the parameterization/configuration/commissioning sequence An error has been identified in the parameterization or in a commissioning procedure, or the parameterization does not match the actual device configuration. • Determine the precise cause of the fault using the commissioning tool. • Adapt the parameterization or device configuration.	(18)	9011	17
General drive fault Group fault. • Determine the precise cause of the fault using the commissioning tool.	(19)	9012	18
Auxiliary unit faulted The monitoring of an auxiliary unit (incoming transformer, cooling unit...) has identified an inadmissible state. • Determine the exact cause of the fault and check the device involved.	(20)	9013	19

Message value

Provides information about the composition of the fault/alarm value.

Example:

Message value: Component number: %1, fault cause: %2

In this example, the message value contains information about the component number and cause of the fault. Entries %1 and %2 are placeholders. If the commissioning software is connected to the converter, then these placeholders are populated with the appropriate values.

Variant

Specifies the product variant in which the message exists. This information is not applicable if an alarm is the same for all product variants.

Component

Type of hardware component that has triggered the fault or alarm. For "None", it is not possible to assign the message to a hardware component.

Explanation of the message value

Explains the possible values of the placeholders (%n) in the message value. In this case, detailed information can be specified regarding the cause and remedy for specific values.

Response

Specifies the response in the event of a fault.

The following table lists all fault responses and their meanings used for the entire SINAMICS drive family.

Table 11-7 Fault responses

List	PROFIdrive	Response	Description
NONE	–	None	No response when a fault occurs.
OFF1	ON/OFF	Brake along the ramp-function generator deceleration ramp followed by pulse inhibit	**Closed-loop speed control** • The motor is braked by immediately specifying n_set = 0 at the ramp-function generator deceleration ramp (p1121). • The pulses are suppressed when standstill has been identified. • "Switching on inhibited" is activated. **Torque control** • The following applies for torque control: Response as for OFF2. • When switching into torque control, the following applies: There is no dedicated braking response. The pulses are suppressed when standstill has been identified. • "Switching on inhibited" is activated.
OFF2	COASTSTOP	Internal/external pulse inhibit	**Closed-loop speed and torque control** • Immediate pulse cancellation, the motor "coasts down " to a standstill. • "Switching on inhibited" is activated.

List	PROFIdrive	Response	Description
OFF3	QUICKSTOP	Braking along the OFF3 deceleration ramp followed by pulse inhibit	**Closed-loop speed control** • The motor is braked along the OFF3 deceleration ramp (p1135) by immediately entering n_set = 0. • The pulses are suppressed when standstill has been identified. • "Switching on inhibited" is activated. **Torque control** • Switchover to closed-loop speed control and other responses as described for closed-loop speed control.
STOP2	–	STOP2	• The motor is braked along the OFF3 deceleration ramp (p1135) by immediately entering n_set = 0. • The drive remains in closed-loop speed control.
ENCODER	–	Internal/external pulse inhibit	The ENCODER fault response occurs because of a sensor error and results in OFF2.

Acknowledgment

A fault can only be acknowledged if the cause has been resolved.

The acknowledgment specifies when the fault can be acknowledged.

An alarm is self-acknowledging.

Table 11-8 Acknowledging faults

Acknowledg-ment	Description
IMMEDIATELY	Acknowledgment can be immediately realized after the cause has been resolved.
PULSE INHIBIT	Once the cause has been resolved, the fault can only be acknowledged when the pulses are inhibited (r0899.11 = 0).
POWER ON	The fault can only be acknowledged using POWER ON (the converter is switched-off/ switched-on).
NONE	For alarms (type "A"), an acknowledgment is not required.

Cause

Describes the possible causes of the fault or alarm. Optionally, a message value, fault value or alarm value can be additionally specified.

Remedy

Generally explains possible procedures to resolve the cause of this active fault or alarm.

11.3.5 List of fault codes and alarm codes

Note

Inapplicable descriptions for the S200 servo drive system

The list of faults and alarms contains some generic descriptions for SINAMICS products that are not applicable to the S200 servo drive system. These inapplicable descriptions include but may not limit to the following:

- DRIVE-CLiQ
- Motor Module
- Line Module
- Hydraulic Module
- Hydraulic cylinder
- Hydraulic valve
- Controller Extension
- CX32 module
- Sensor Module
- Voltage Sensing Module

Product: SINAMICS S200, Version: 605020000, Language: eng
Objects: S200 Basic PTI, S200 PTI

F01000	**Internal software error**
Message class:	Hardware/software error (1)
Message value:	Module: %1, line: %2
Component:	Control Unit (CU)
Response:	OFF2
Acknowledgment:	POWER ON
Cause:	An internal software error has occurred. Fault value (r0949, interpret hexadecimal): Only relevant for internal fault diagnostics.
Remedy:	- Evaluate fault buffer (r0945). - Carry out a POWER ON (switch-off/switch-on) for all components. - If required, check the data on the non-volatile memory (e.g. memory card). - Upgrade firmware to later version. - Contact Technical Support. - Replace the converter.

F01001	**FloatingPoint exception**
Message class:	Hardware/software error (1)
Message value:	%1
Component:	Control Unit (CU)
Response:	OFF2
Acknowledgment:	POWER ON

Cause: An exception occurred for an operation with the FloatingPoint data type.
The error can be caused by the basic system or a technology function.
Fault value (r0949, interpret hexadecimal):
Only relevant for internal fault diagnostics.

Remedy:
- Carry out a POWER ON (switch-off/switch-on) for all components.
- Check configuration and signals of the blocks in FBLOCKS.
- Check configuration and signals of DCC charts.
- Check configuration and signals of TEC charts.
- Upgrade firmware to later version.
- Contact Technical Support.

F01002 Internal software error

Message class: Hardware/software error (1)
Message value: %1
Component: Control Unit (CU)
Response: OFF2
Acknowledgment: IMMEDIATELY
Cause: An internal software error has occurred.
Fault value (r0949, interpret hexadecimal):
Only relevant for internal fault diagnostics.

Remedy:
- Carry out a POWER ON (switch-off/switch-on) for all components.
- Upgrade firmware to later version.
- Contact Technical Support.

F01003 Acknowledgment delay when accessing the memory

Message class: Hardware/software error (1)
Message value: %1
Component: Control Unit (CU)
Response: OFF2
Acknowledgment: IMMEDIATELY
Cause: A memory area was accessed that does not return a "READY".
Fault value (r0949, interpret hexadecimal):
Only relevant for internal fault diagnostics.

Remedy:
- Carry out a POWER ON (switch-off/switch-on) for all components.
- Contact Technical Support.

N01004 (F, A) Internal software error

Message class: Hardware/software error (1)
Message value: %1
Component: Control Unit (CU)
Response: NONE
Acknowledgment: NONE
Cause: An internal software error has occurred.
Fault value (r0949, hexadecimal):
Only relevant for internal fault diagnostics.

Remedy:
- Contact Technical Support.

Response upon: F: OFF2
Acknowl. upon F: POWER ON
Response upon: A: NONE
Acknowl. upon A: NONE

A01009 (N) Control Unit overtemperature

Message class: Overtemperature of the electronic components (6)
Message value: %1
Component: Control Unit (CU)
Response: NONE
Acknowledgment: NONE
Cause: The temperature of the converter has exceeded the specified limit value.
Remedy: - Check the ambient temperature at the converter installation location
- Check the converter air intake.
- Check the converter fan.
Note:
The alarm is automatically withdrawn once the limit value has been fallen below.
Response upon: N: NONE
Acknowl. upon N: NONE

F01011 (N) Download interrupted

Message class: Error in the parameterization / configuration / commissioning procedure (18)
Message value: %1
Component: None
Response: NONE
Acknowledgment: IMMEDIATELY
Cause: The project download was interrupted.
Fault value (r0949, interpret decimal):
1: The user prematurely interrupted the project download.
2: The communication cable was interrupted (e.g. cable breakage, cable withdrawn).
3: The project download was prematurely exited by the commissioning tool.
100: Different versions between the firmware version and project files which were loaded by loading into the file system "Download from memory card".
Note:
The response to an interrupted download is the state "first commissioning".
Remedy: - Check the communication cable.
- Download the project again.
- Boot from previously saved files (switch-off/switch-on or p0976).
- When loading into the file system (download from memory card), use the matching version.
Response upon: N: NONE
Acknowl. upon N: NONE

F01014 Topology: Component property changed

Message class: Hardware/software error (1)
Message value: Component number: %1
Component: None
Response: NONE
Acknowledgment: IMMEDIATELY
Cause: The properties of the component have fundamentally changed.
Fault value (r0949, interpret hexadecimal):
Component number.
Remedy: - Carry out a restart, reload parameters.

F01015 Internal software error

Message class: Hardware/software error (1)
Message value: %1
Component: Control Unit (CU)
Response: OFF2
Acknowledgment: POWER ON
Cause: An internal software error has occurred.
Fault value (r0949, interpret decimal):
Only relevant for internal fault diagnostics.
Remedy: - Carry out a POWER ON (switch-off/switch-on) for all components.
- Upgrade firmware to later version.
- Contact Technical Support.

A01019 Writing to the removable data medium unsuccessful

Message class: Hardware/software error (1)
Message value: -
Component: Control Unit (CU)
Response: NONE
Acknowledgment: NONE
Cause: The write access to the removable data medium was unsuccessful.
Remedy: - Check the removable data medium and if required replace.
- Repeat the data backup.

A01020 Writing to RAM disk unsuccessful

Message class: Hardware/software error (1)
Message value: -
Component: Control Unit (CU)
Response: NONE
Acknowledgment: NONE
Cause: Write access to the internal RAM disk was unsuccessful.
Remedy: Adapt the file size for the system logbook to the internal RAM disk (p9930).

F01022 BIOS update required

Message class: Hardware/software error (1)
Message value: -
Component: Control Unit (CU)
Response: OFF2
Acknowledgment: POWER ON
Cause: The current firmware is not compatible with the installed BIOS. A BIOS update is required to use the device with this firmware.
Remedy: - Updating the BIOS to the current version
- Alternatively, downgrade to the previous firmware

F01023 Software timeout (internal)

Message class: Hardware/software error (1)
Message value: %1
Component: Control Unit (CU)
Response: NONE
Acknowledgment: IMMEDIATELY

Cause: An internal software timeout has occurred.
Fault value (r0949, interpret decimal):
Only relevant for internal fault diagnostics.

Remedy: - Carry out a POWER ON (switch-off/switch-on) for all components.
- Upgrade firmware to later version.
- Contact Technical Support.

F01030 Sign-of-life failure for master control

Message class: Communication error to the higher-level control system (9)

Message value: -

Component: None

Response: OFF3

Acknowledgment: IMMEDIATELY

Cause: For active PC master control of the PC, no sign-of-life was received within the monitoring time.
The master control was returned to the drive.

Remedy: Set the monitoring time higher at the PC or, if required, completely disable the monitoring function.
The monitoring time is set as follows using the commissioning tool:
<Drive> -> Commissioning -> Control panel -> Button "Fetch master control" -> A window is displayed to set the monitoring time in milliseconds.
Notice:
The monitoring time should be set as short as possible. A long monitoring time means a late response when the communication fails!

A01032 (F) All parameters must be saved

Message class: Hardware/software error (1)

Message value: %1

Component: Control Unit (CU)

Response: NONE

Acknowledgment: NONE

Cause: Data backup is incomplete
The partially saved parameters are not loaded the next time the system runs up.
For the system to successfully power up, all of the parameters must have been completely backed up.
Alarm value (r2124, interpret decimal):
Only for internal Siemens troubleshooting.

Remedy: Save all parameters.
See also: p0977 (Save all parameters)

Response upon: F: NONE

Acknowl. upon F: IMMEDIATELY

F01033 Units changeover: Reference parameter value invalid

Message class: Error in the parameterization / configuration / commissioning procedure (18)

Message value: Parameter: %1

Component: None

Response: NONE

Acknowledgment: IMMEDIATELY

Cause: When changing over the units to the referred representation type, it is not permissible for any of the required reference parameters to be equal to 0.0
Fault value (r0949, parameter):
Reference parameter whose value is 0.0.

Remedy: Set the value of the reference parameter to a number different than 0.0.
See also: p0304, p0305, p2000, p2001, p2002, p2003, p2004

F01034 Units changeover: Calculation parameter values after reference value change unsuccessful

Message class: Error in the parameterization / configuration / commissioning procedure (18)
Message value: Parameter: %1
Component: None
Response: NONE
Acknowledgment: IMMEDIATELY
Cause: The change of a reference parameter meant that for an involved parameter the set value was not able to be re-calculated in the per unit representation. The change was rejected and the original parameter value restored.
Fault value (r0949, parameter):
Parameter whose value was not able to be re-calculated.
See also: p0304, p0305, p2000, p2001, p2002, p2003, p2004
Remedy: - Select the value of the reference parameter such that the parameter involved can be calculated in the per unit representation.

A01035 (F) Parameter backup files corrupted

Message class: Hardware/software error (1)
Message value: %1
Component: Control Unit (CU)
Response: NONE
Acknowledgment: NONE
Cause: When the converter runs up, no complete data set was found from the parameter backup files. The last time that the parameterization was saved, it was not completely carried out.
It is possible that the backup was interrupted by switching off or withdrawing the memory card.
Alarm value (r2124, interpret hexadecimal):
ddccbbaa hex:
aa = 01 hex:
Run-up was realized without data backup. The drive is in the factory setting.
aa = 02 hex:
The last available backup data record was loaded. The parameterization must be checked. It is recommended that the parameterization is downloaded again.
aa = 03 hex: An external card with valid parameter backup was found and copied to the converter. Run-up is realized from this project.
aa = 04 hex: An external card with incomplete or defective parameter backup was found. Run-up was realized without data backup. The drive is in the factory setting.
dd, cc, bb:
Only for internal Siemens troubleshooting.
See also: p0977 (Save all parameters)
Remedy: - Download the project again using the commissioning tool.
- Retentively save parameters (save all parameters p0977 = 1)
See also: p0977 (Save all parameters)
Response upon: F: NONE
Acknowl. upon F: IMMEDIATELY

F01036 (A) Parameter backup file missing

Message class: Hardware/software error (1)
Message value: %1
Component: Control Unit (CU)

Response: NONE
Acknowledgment: IMMEDIATELY
Cause: When loading the device parameterization, a parameter backup file cannot be found.
Remedy: If the project data are backed up using the commissioning tool, then the project must be downloaded again.
Retentively save parameters (save all parameters, p0977 = 1), as a consequence, parameter files are completely written back to the non-volatile memory.
Note:
If the project data have not been backed up, then a new first commissioning is required.
Response upon: A: NONE
Acknowl. upon A: NONE

F01038 (A) Loading the parameter backup file unsuccessful

Message class: Hardware/software error (1)
Message value: %1
Component: Control Unit (CU)
Response: NONE
Acknowledgment: IMMEDIATELY
Cause: An error has occurred when loading parameter backup files from the non-volatile memory.
Remedy: - If you have saved the project data using the commissioning tool, then download the project again. Retentively save the data or set p0977 = 1. This means that the parameter files are again completely written to the non-volatile memory.
- Replace the memory card or the converter.
Response upon: A: NONE
Acknowl. upon A: NONE

F01039 (A) Writing to the parameter back-up file unsuccessful

Message class: Hardware/software error (1)
Message value: %1
Component: Control Unit (CU)
Response: NONE
Acknowledgment: IMMEDIATELY
Cause: Writing to at least one parameter backup file in the non-volatile memory was unsuccessful.
- A parameter backup file has the "read only" file attribute and cannot be overwritten.
- There is not sufficient free memory space available.
- The non-volatile memory is defective and cannot be written to.
Remedy: - Check the free memory space in the non-volatile memory.
- Replace the memory card or the converter.
Response upon: A: NONE
Acknowl. upon A: NONE

F01040 Save parameter settings and carry out a POWER ON

Message class: Error in the parameterization / configuration / commissioning procedure (18)
Message value: -
Component: None
Response: OFF2
Acknowledgment: POWER ON
Cause: A parameter was changed, which means that it is necessary to save the parameters and reboot.

Remedy:
- Back up parameters.
- Carry out a POWER ON (switch-off/switch-on) for all components.

Then:
- Upload the drive in the commissioning tool.

F01041 Parameter save necessary

Message class: Error in the parameterization / configuration / commissioning procedure (18)

Message value: %1

Component: None

Response: NONE

Acknowledgment: IMMEDIATELY

Cause: Defective or missing files were detected on the memory card when booting.
Fault value (r0949, interpret decimal):
1: Source file cannot be opened.
2: Source file cannot be read.
3: Target directory cannot be set up.
4. Target file cannot be set up/opened.
5. Target file cannot be written to.
Additional values:
Only relevant for internal fault diagnostics.

Remedy:
- Save the parameters.
- Reload the project into the converter.
- Update the firmware
- If required, replace the converter and/or memory card.

F01042 Parameter error during project download

Message class: Error in the parameterization / configuration / commissioning procedure (18)

Message value: Parameter: %1, index: %2, fault cause: %3

Component: None

Response: OFF2

Acknowledgment: IMMEDIATELY

Cause:

An error was detected when downloading a project using the commissioning software (e.g. incorrect parameter value). It is possible that the parameter limits are dependent on other parameters.

The detailed cause of the fault can be determined using the fault value.

Fault value (r0949, interpret hexadecimal):

ccbbaaaa hex

aaaa = Parameter

bb = Index

cc = fault cause

0: Parameter number illegal.

1: Parameter value cannot be changed.

2: Lower or upper value limit exceeded.

3: Sub-index incorrect.

4: No array, no sub-index.

5: Data type incorrect.

6: Setting not permitted (only resetting).

7: Descriptive element cannot be changed.

9: Descriptive data not available.

11: No master control.

15: No text array available.

17: Task cannot be executed due to operating state.

20: Illegal value.

21: Response too long.

22: Parameter address illegal.

23: Format illegal.

24: Number of values not consistent.

25: Drive object does not exist.

101: Presently deactivated.

104: Illegal value.

107: Write access not permitted when controller enabled.

108: Unit unknown.

109: Write access only in the commissioning status, encoder.

110: Write access only in the commissioning status, motor.

111: Write access only in the commissioning status, power unit.

112: Write access only in the quick commissioning mode.

113: Write access only in the ready mode.

114: Write access only in the commissioning status, parameter reset.

115: Write access only in the Safety Integrated commissioning status.

116: Write access only in the commissioning status, technological application/units.

117: Write access only in the commissioning status.

118: Write access only in the commissioning status, download.

119: Parameter may not be written in download.

120: Write access only in the commissioning status, drive basis configuration.

121: Write access only in the commissioning status, define drive type.

122: Write access only in the commissioning status, data set basis configuration.

123: Write access only in the commissioning status, device configuration.

124: Write access only in the commissioning status, device download.

125: Write access only in the commissioning status, device parameter reset.

126: Write access only in the commissioning status, device ready.

127: Write access only in the commissioning status, device.

129: Parameter may not be written in download.

131: Requested signal interconnection not possible as the signal source does not supply float value.

132: Free signal interconnection via PROFIdrive telegram setting inhibited.

133: Access method not defined.
200: Below the valid values.
201: Above the valid values.
202: Cannot be accessed from the Basic Operator Panel (BOP).
203: Cannot be read from the Basic Operator Panel (BOP).
204: Write access not permitted.

Remedy:
- Correct the parameterization in the commissioning tool and download the project again.
- Enter the correct value in the specified parameter.
- Identify the parameter that restricts the limits of the specified parameter.

F01043 Fatal error at project download

Message class: Error in the parameterization / configuration / commissioning procedure (18)

Message value: Fault cause: %1

Component: None

Response: NONE

Acknowledgment: IMMEDIATELY

Cause: A fatal error was detected when downloading a project using the commissioning tool.
Fault value (r0949, interpret decimal):
14: Drive status cannot be changed to "ready for operation" (r0947 and r0949).
Additional values:
Only relevant for internal fault diagnostics.

Remedy:
- Use the current version of the commissioning tool.
- Modify the offline project and carry out a new download (e.g. compare the number of drive objects, motors, encoders, power units in the offline project and at the drive).
- Change the drive state (is a drive rotating or is there a message/signal?).
- Observe additional active messages/signals and remove their cause (e.g. correct any incorrectly set parameters).
- Automatically calculate the control parameters.
- Boot from previously saved files (switch-off/switch-on or p0976).
- Before a new download, restore the factory setting.

F01044 Descriptive data error

Message class: Hardware/software error (1)

Message value: %1

Component: Control Unit (CU)

Response: OFF2

Acknowledgment: POWER ON

Cause: An error was detected when loading the descriptive data saved in the non-volatile memory.

Remedy: Replace the memory card or the converter.

F01045 Configuring data invalid

Message class: Hardware/software error (1)

Message value: %1

Component: None

Response: NONE

Acknowledgment: IMMEDIATELY

Cause: The run-up from the loaded project was unsuccessful.
Possible projects:
- Download with commissioning tool
- Run-up from data backup after retentively saving
- Run-up from data backup after cloning created from external card
- Restart

Fault value (r0949, interpret hexadecimal):
Only relevant for internal fault diagnostics.

Remedy: - Restore the factory setting (p0976 = 1) and reload the project into the converter.
Then retentively save the parameterization or set p0977 = 1. This overwrites the incorrect parameter files in the non-volatile memory – and this alarm is withdrawn.

F01046 Parameter value from the project not accepted

Message class: Hardware/software error (1)
Message value: Parameter: %1
Component: None
Response: NONE
Acknowledgment: IMMEDIATELY
Cause: When running up from the loaded project, a parameter value was not accepted.
Possible projects:
- Download with commissioning tool
- Run-up from data backup after retentively saving
- Run-up from data backup after cloning created from external card
- Run-up from an old project or upgrade the firmware
- Restart

Fault value (r0949, interpret decimal):
Parameter number whose value was not accepted.

Remedy: Check the parameter value of the parameter that was not accepted and, if required, correct.

F01047 It is not possible to restore the drive data from the backup file

Message class: Error in the parameterization / configuration / commissioning procedure (18)
Message value: %1
Component: None
Response: NONE
Acknowledgment: IMMEDIATELY
Cause: An error occurred when restoring the drive data from the backup file.
An unsuitable or incorrect backup file was detected under path BACKUPFILE_NEXT_START on the memory card.

Fault value (r0949, interpret decimal):
1: The backup file has the incorrect format. Only files are supported with extension .zip or .ZIP.
2: Several files were found in path BACKUPFILE_NEXT_START. It cannot be determined from which backup file the drive data should be restored.
3: The backup file name is too long.
4: The backup file was unsuccessfully unzipped.
5, 6, 7, 8 or 9: The content of the backup file is invalid or the backup file was generated with encryption.
10: The backup file was generated with an incompatible (older) firmware version. Restoring the drive data is not supported.
11: The backup file version is newer than the converter firmware version being used.
12: The backup file was generated for a different converter family.
Additional values: Only relevant for internal fault diagnostics.

Remedy: For fault value = 1: Use a file with .zip or .ZIP extension.
For fault value = 2: Only save the required backup file under BACKUPFILE_NEXT_START, remove other files.
For fault value = 3: Rename backup file Notice: Special characters can be longer than a visible character.
For fault value = 4, 5, 6, 7, 8 or 9: Use the backup file which was created using a SIEMENS commissioning tool (Startdrive, web server).
Before a backup file is created, encryption of the drive data must be deactivated.
For fault value = 10: Only converter backup files with firmware versions greater than or equal to V6.1 are supported. Use a suitable backup file.
For fault value = 11: Use the converter backup file that was created with a lower firmware version or the same firmware version.
For fault value = 12: Use the backup file for the matching converter family.

A01049 CU: It is not possible to write to file

Message class: Hardware/software error (1)
Message value: %1
Component: Control Unit (CU)
Response: NONE
Acknowledgment: NONE
Cause: It is not possible to write to a write-protected parameter backup file. The write request was interrupted.
Alarm value (r2124, interpret decimal):
Number drive object
Remedy: Check whether the "write protected" attribute has been set for the files in the non-volatile memory.
When required, remove write protection and repeat the save operation (e.g. set p0977 = 1).

F01050 Memory card and device incompatible

Message class: Error in the parameterization / configuration / commissioning procedure (18)
Message value: -
Component: Control Unit (CU)
Response: OFF2
Acknowledgment: IMMEDIATELY
Cause: The memory card and the device type do not match (e.g. a memory card for SINAMICS S is inserted in SINAMICS G).
Remedy: - Insert the matching memory card.
- Use the matching converter or power unit.

F01054 CU: System limit exceeded

Message class: Error in the parameterization / configuration / commissioning procedure (18)
Message value: %1
Component: Control Unit (CU)
Response: OFF2
Acknowledgment: IMMEDIATELY
Cause: At least one system overload has been identified.
Fault value (r0949, interpret decimal):
1: Computing time load too high.
5: Peak load too high.
Note:
As long as this fault is present, it is not possible to save the parameters (p0977).
Remedy: - Reduce the computing time load of the converter to less than 100 %.
- Deactivate functions.

F01068 CU: Data memory memory overflow

Message class: Error in the parameterization / configuration / commissioning procedure (18)
Message value: %1
Component: Control Unit (CU)
Response: OFF2
Acknowledgment: IMMEDIATELY
Cause: The utilization for a data memory area is too large.
Fault value (r0949, interpret binary):
Bit 0 = 1: High-speed data memory 1 overloaded
Bit 1 = 1: High-speed data memory 2 overloaded
Bit 2 = 1: High-speed data memory 3 overloaded
Bit 3 = 1: High-speed data memory 4 overloaded
Remedy: - Deactivate function.
- Deactivate drive object.
- Remove drive object from the target topology.

A01069 Parameter backup and device incompatible

Message class: Error in the parameterization / configuration / commissioning procedure (18)
Message value: -
Component: Control Unit (CU)
Response: NONE
Acknowledgment: NONE
Cause: The parameter backup on the memory card and in the converter do not match.
The module boots with the factory settings.
Example:
Devices A and B. are not compatible and a memory card with the parameter backup for device A is inserted in device B.
Remedy: - Insert a memory card with compatible parameter backup and carry out a POWER ON.
- Insert a memory card without parameter backup and carry out a POWER ON.
- Save the parameters (p0977 = 1).

A01073 (N) POWER ON required for backup copy on memory card

Message class: General drive fault (19)
Message value: -
Component: Control Unit (CU)
Response: NONE
Acknowledgment: NONE
Cause: The parameter assignment on the visible partition of the memory card has changed.
In order that the backup copy on the memory card is updated on the non-visible partition, it is necessary to carry out a POWER ON or hardware reset (p0972) of the converter.
Note:
A new POWER ON can be requested via this alarm (e.g. after retentively saving).
Remedy: - Carry out a POWER ON (switch-off/switch-on).
- Carry out a hardware reset (RESET button, p0972).
Response upon: N: NONE
Acknowl. upon N: NONE

F01082 Parameter error when running up from data backup

Message class: Error in the parameterization / configuration / commissioning procedure (18)
Message value: Parameter: %1, index: %2, fault cause: %3

Component:	None
Response:	OFF2
Acknowledgment:	IMMEDIATELY

Cause:

Parameterizing errors have been detected (e.g. incorrect parameter value). It is possible that the parameter limits are dependent on other parameters.

The detailed cause of the fault can be determined using the fault value.

Fault value (r0949, interpret hexadecimal):

ccbbaaaa hex

aaaa = Parameter

bb = Index

cc = fault cause

0: Parameter number illegal.
1: Parameter value cannot be changed.
2: Lower or upper value limit exceeded.
3: Sub-index incorrect.
4: No array, no sub-index.
5: Data type incorrect.
6: Setting not permitted (only resetting).
7: Descriptive element cannot be changed.
9: Descriptive data not available.
11: No master control.
15: No text array available.
17: Task cannot be executed due to operating state.
20: Illegal value.
21: Response too long.
22: Parameter address illegal.
23: Format illegal.
24: Number of values not consistent.
25: Drive object does not exist.
101: Presently deactivated.
104: Illegal value.
107: Write access not permitted when controller enabled.
108: Unit unknown.
109: Write access only in the commissioning status, encoder.
110: Write access only in the commissioning status, motor.
111: Write access only in the commissioning status, power unit.
112: Write access only in the quick commissioning mode.
113: Write access only in the ready mode.
114: Write access only in the commissioning status, parameter reset.
115: Write access only in the Safety Integrated commissioning status.
116: Write access only in the commissioning status, technological application/units.
117: Write access only in the commissioning status.
118: Write access only in the commissioning status, download.
119: Parameter may not be written in download.
120: Write access only in the commissioning status, drive basis configuration.
121: Write access only in the commissioning status, define drive type.
122: Write access only in the commissioning status, data set basis configuration.
123: Write access only in the commissioning status, device configuration.
124: Write access only in the commissioning status, device download.
125: Write access only in the commissioning status, device parameter reset.
126: Write access only in the commissioning status, device ready.
127: Write access only in the commissioning status, device.
129: Parameter may not be written in download.
131: Requested signal interconnection not possible as the signal source supplies non-float value.
132: Free signal interconnection via PROFIdrive telegram setting inhibited.

133: Access method not defined.
200: Below the valid values.
201: Above the valid values.
202: Cannot be accessed from the Basic Operator Panel (BOP).
203: Cannot be read from the Basic Operator Panel (BOP).
204: Write access not permitted.

Remedy:
- Based on the fault value, identify the parameter that caused the fault.
- Correct the value in the specified parameter.
- Download the project again using the commissioning tool and retentively save parameters. Or retentively save parameters and carry out a POWER ON (switch-off/switch-on).

A01100 CU: Memory card withdrawn

Message class: General drive fault (19)
Message value: -
Component: Control Unit (CU)
Response: NONE
Acknowledgment: NONE
Cause: The memory card (non-volatile memory) was withdrawn during operation.
Notice:
It is not permissible for the memory card to be withdrawn or inserted under voltage.
Remedy:
- Switch off the drive system.
- Re-insert the memory card that was withdrawn - This card must match the drive system.
- Switch on the drive system again.

F01107 CU: Save to memory card unsuccessful

Message class: Hardware/software error (1)
Message value: %1
Component: Control Unit (CU)
Response: NONE
Acknowledgment: IMMEDIATELY
Cause: A data save in the non-volatile memory was not able to be successfully carried out.
- Non-volatile memory is defective.
- Insufficient space in the non-volatile memory.

Fault value (r0949, interpret decimal):
Only relevant for internal fault diagnostics.
Remedy:
- Try to save again.
- Replace the memory card or Control Unit.

F01120 (A) Terminal initialization has failed

Message class: Hardware/software error (1)
Message value: %1
Variant: S200 PTI
Component: None
Response: OFF1
Acknowledgment: IMMEDIATELY
Cause: An internal software error occurred when initializing the software functionality for terminals.
Fault value (r0949, interpret hexadecimal):
Only relevant for internal fault diagnostics.

Remedy: - Carry out a POWER ON (switch-off/switch-on) for all components.
- Upgrade firmware to later version.
- Contact Technical Support.
- Replace the Control Unit.

Response upon: A: NONE

Acknowl. upon A: NONE

F01122 (A) Frequency at the measuring probe input too high

Message class: Application/technological function faulted (17)

Message value: %1

Component: None

Response: OFF1

Acknowledgment: IMMEDIATELY

Cause: The frequency of the pulses at the measuring probe input is too high.
Fault value (r0949, interpret decimal):
1: DI/DO 9 (X122.8)
2: DI/DO 10 (X122.10)
4: DI/DO 11 (X122.11)
8: DI/DO 13 (X132.8)
16: DI/DO 14 (X132.10)
32: DI/DO 15 (X132.11)
64: DI/DO 8 (X122.7)
128: DI/DO 12 (X132.7)

Remedy: Reduce the frequency of the pulses at the measuring probe input.

Response upon: A: NONE

Acknowl. upon A: NONE

F01151 CU: Number of drive objects of a category exceeded

Message class: Error in the parameterization / configuration / commissioning procedure (18)

Message value: Drive object category: %1, number permitted: %2, actual number: %3

Component: None

Response: NONE

Acknowledgment: IMMEDIATELY

Cause: The maximum permissible number of drive objects of a category was exceeded.
Note regarding the message value:
The individual information is coded as follows in the message value (r0949/r2124):
ddccbbaa hex:
aa = drive object category:
- Drive object category, for which the maximum permissible number of drive objects was exceeded.
bb = number permitted:
- Maximum permissible number for this drive object category.
cc = actual number:
- Actual number for this drive object category.
dd = no significance

Remedy: - Switch off the unit.
- Suitably restrict the number of drive objects of the specified category by reducing the number of inserted components.
- Re-commission the unit.

F01200 CU: Time slice management internal software error

Message class: Hardware/software error (1)
Message value: %1
Component: Control Unit (CU)
Response: OFF2
Acknowledgment: IMMEDIATELY
Cause: A time slice management error has occurred.
It is possible that the sampling times have been inadmissibly set.
Fault value (r0949, interpret hexadecimal):
998:
Too many time slices occupied by technology functions (e.g. DCC).
999:
Too many time slices occupied by the basic system. Too many different sampling times may have been set.
Additional values:
Only relevant for internal fault diagnostics.
Remedy: - Contact Technical Support.

F01205 CU: Time slice overflow

Message class: Hardware/software error (1)
Message value: %1
Component: Control Unit (CU)
Response: OFF2
Acknowledgment: POWER ON
Cause: Insufficient processing time is available for the existing topology.
Fault value (r0949, interpret hexadecimal):
Only relevant for internal fault diagnostics.
Remedy: - Reduce the number of drives.

F01250 EEPROM incorrect read-only data

Message class: Hardware/software error (1)
Message value: %1
Component: Control Unit (CU)
Response: NONE
Acknowledgment: POWER ON
Cause: Error when reading the read-only data of the EEPROM in the converter.
Fault value (r0949, interpret decimal):
Only for internal Siemens troubleshooting.
Remedy: - Carry out a POWER ON (switch-off/switch-on).
- Replace the converter.

A01251 CU: CU-EEPROM incorrect read-write data

Message class: Hardware/software error (1)
Message value: %1
Component: Control Unit (CU)
Response: NONE
Acknowledgment: NONE
Cause: Error when reading the read-write data of the EEPROM in the converter.
Alarm value (r2124, interpret decimal):
Only for internal Siemens troubleshooting.

Remedy: For alarm value r2124 < 256, the following applies:
- Carry out a POWER ON (switch-off/switch-on).
- Replace the converter.

For alarm value r2124 >= 256, the following applies:
- For the converter with this alarm, clear the fault memory (p0952 = 0).
- Replace the converter.

F01255 CU: Option Board EEPROM read-only data error

Message class: Hardware/software error (1)
Message value: %1
Component: None
Response: NONE
Acknowledgment: POWER ON
Cause: Error when reading the read-only data of the EEPROM in the Option Board.
Fault value (r0949, interpret decimal):
Only relevant for internal fault diagnostics.
Remedy:
- Carry out a POWER ON (switch-off/switch-on).
- Replace the Control Unit.

A01256 CU: Option Board EEPROM read-write data error

Message class: Hardware/software error (1)
Message value: %1
Component: None
Response: NONE
Acknowledgment: NONE
Cause: Error when reading the read-write data of the EEPROM in the Option Board.
Alarm value (r2124, interpret decimal):
Only relevant for internal fault diagnostics.
Remedy:
- Carry out a POWER ON (switch-off/switch-on).
- Replace the Control Unit.

A01314 Topology: Component must not be present

Message class: Error in the parameterization / configuration / commissioning procedure (18)
Message value: %1, to %2, %3, connection: %4
Component: None
Response: NONE

Acknowledgment: NONE

Explanation of the message value: For %1, %2

Value	Cause	Remedy
0	Component unknown	
1	Control Unit	
2	Motor Module	
3	Line Module	
4	Sensor Module	
5	Voltage Sensing Module	
6	Terminal Module	
7	DRIVE-CLiQ Hub Module	
8	Controller Extension	
9	Filter module	
10	Hydraulic Module	
49	DRIVE-CLiQ component	
50	Option slot	
60	Encoder	
70	DRIVE-CLiQ motor	
71	Hydraulic cylinder	
72	Hydraulic valve	
80	Motor	

For %3

Component in target topology

For %4

Value	Cause	Remedy
0	Port 0	
1	Port 1	
2	Port 2	
3	Port 3	
4	Port 4	
5	Port 5	
6	Port 6	
7	Port 7	
8	Port 8	
9	Port 9	
10	X100	
11	X101	
12	X102	
13	X103	
14	X104	
15	X105	
20	X200	
21	X201	
22	X202	
23	X203	
24	X204	
25	X205	
40	X400	

41	X401
42	X402
50	X500
51	X501
52	X502
53	X503
54	X504
55	X505
56	X506
57	X507

Cause: For a component, "deactivate and not present" is set but this component is still in the topology.
Alarm value (r2124, interpret hexadecimal):
ddccbbaa hex:
aa = component number
bb = component class of the component
cc = connection number
Note:
Component class and connection number are described in F01375.

Remedy: - Remove the corresponding component.
- Change the setting "deactivate and not present".
Note:
Under "Topology --> Topology view", the commissioning tool where relevant offers improved diagnostics capability (e.g. setpoint/actual value comparison).

A01319 Inserted component not initialized

Message class: Error in the parameterization / configuration / commissioning procedure (18)
Message value: -
Component: None
Response: NONE
Acknowledgment: NONE
Cause: Initialization is required for at least one inserted component.
This is only possible if the pulse inhibit is active on all drive objects.
Remedy: Activate pulse inhibit for all drive objects.

F01325 Topology: Component number not included in target topology

Message class: Error in the parameterization / configuration / commissioning procedure (18)
Message value: Component number: %1
Component: None
Response: NONE
Acknowledgment: IMMEDIATELY
Cause: The component referenced in a data set is not contained in the target topology.
Fault value (r0949, interpret decimal)
Remedy: Establish consistency between the topology and data set configuration.

A01330 Topology: Quick commissioning not possible

Message class: Error in the parameterization / configuration / commissioning procedure (18)
Message value: Fault cause: %1, supplementary information: %2, preliminary component number: %3
Component: None
Response: NONE

Acknowledgment: NONE
Cause: Unable to carry out a quick commissioning. The existing actual topology does not fulfill the requirements.
Remedy: - Check the motor connection.
- Carry out a POWER ON (switch-off/switch-on).

F01356 Topology: There is a defective component

Message class: Hardware/software error (1)
Message value: Fault cause: %1, component number: %2, connection number: %3
Component: None
Response: NONE
Acknowledgment: IMMEDIATELY
Cause: The actual topology indicates at least one defective component.
Note:
Pulse enable is withdrawn and prevented.
Remedy: Replace the defective component and restart the system.

F01380 Topology: Actual topology EEPROM defective

Message class: Hardware/software error (1)
Message value: Preliminary component number: %1
Component: None
Response: NONE
Acknowledgment: POWER ON
Cause: When detecting the actual topology, a component with a defective EEPROM was detected.
Fault value (r0949, interpret hexadecimal):
bbbbaaaa hex:
bbbb = reserved
aaaa = preliminary component number of the defective components
Remedy: Output the fault value and remove the defected component.

A01388 Topology: Encoder incorrectly inserted

Message class: Error in the parameterization / configuration / commissioning procedure (18)
Message value: Component: %1, to %2, %3, connection: %4
Component: None
Response: NONE

Acknowledgment: NONE

Explanation of the message value:

For %1
Component in target topology
For %2

Value	Cause	Remedy
0	Component unknown	
1	Control Unit	
2	Motor Module	
3	Line Module	
4	Sensor Module	
5	Voltage Sensing Module	
6	Terminal Module	
7	DRIVE-CLiQ Hub Module	
8	Controller Extension	
9	Filter module	
10	Hydraulic Module	
49	DRIVE-CLiQ component	
50	Option slot	
60	Encoder	
70	DRIVE-CLiQ motor	
71	Hydraulic cylinder	
72	Hydraulic valve	
80	Motor	

For %3
Component in actual topology
For %4

Value	Cause	Remedy
0	Port 0	
1	Port 1	
2	Port 2	
3	Port 3	
4	Port 4	
5	Port 5	
6	Port 6	
7	Port 7	
8	Port 8	
9	Port 9	
10	X100	
11	X101	
12	X102	
13	X103	
14	X104	
15	X105	
20	X200	
21	X201	
22	X202	
23	X203	
24	X204	
25	X205	

40	X400
41	X401
42	X402
50	X500
51	X501
52	X502
53	X503
54	X504
55	X505
56	X506
57	X507

Cause:

The topology comparison has detected an EnDat encoder in the actual topology that has been incorrectly inserted with respect to the target topology.

Alarm value (r2124, interpret hexadecimal):

ddccbbaa hex:

dd = connection number (%4)

cc = component number (%3)

bb = component class (%2)

aa = component number of the incorrectly inserted component (%1)

Note:

The component is described in dd, cc and bb, where the component involved is incorrectly inserted.

Component class and connection number are described in F01375.

The drive system is no longer booted. In this state, the drive control (closed-loop) cannot be enabled.

Remedy:

Adapting topologies:

- Insert the components involved at the right connection (correct the actual topology).
- Adapt the project/parameterizing in the commissioning tool (correct the target topology).
- Automatically resolve the topology error.

Note:

Under "Topology --> Topology view" the commissioning tool where relevant offers improved diagnostics capability (e.g. setpoint/actual value comparison).

A01420 Topology: Component different

Message class: Error in the parameterization / configuration / commissioning procedure (18)

Message value: Component: %1, target: %2, actual: %3, difference: %4

Component: None

Response: NONE

Acknowledgment: NONE

Explanation of the message value:

For %1

Component in target topology

For %2, %3

Value	Cause	Remedy
0	Component unknown	
1	Control Unit	
2	Motor Module	
3	Line Module	
4	Sensor Module	
5	Voltage Sensing Module	
6	Terminal Module	
7	DRIVE-CLiQ Hub Module	
8	Controller Extension	
9	Filter module	
10	Hydraulic Module	
49	DRIVE-CLiQ component	
50	Option slot	
60	Encoder	
70	DRIVE-CLiQ motor	
71	Hydraulic cylinder	
72	Hydraulic valve	
80	Motor	

For %4

Value	Cause	Remedy
1	Different component type	
2	Different article number	
3	Different manufacturer	
4	Incorrect subcomponent connected	
5	NX10 or NX15 used instead of CX32.	
6	CX32 used instead of NX10 or NX15.	
7	Different number of connections	

Cause:

The topology comparison has detected differences in the actual and target topologies in the electronic nameplate component.

Alarm value (r2124, interpret hexadecimal):

ddccbbaa hex:

aa = component number (%1),

bb = component class of the target topology (%2),

cc = component class of the actual topology (%3),

dd = difference (%4)

Note:

The component class is described in F01375.

The drive system is no longer booted. In this state, the drive control (closed-loop) cannot be enabled.

Remedy:

Adapting topologies:

- Connect the expected component (correct the actual topology).
- Adapt the project/parameterizing in the commissioning tool (correct the target topology).

Note:

Under "Topology --> Topology view" the commissioning tool where relevant offers improved diagnostics capability (e.g. setpoint/actual value comparison).

A01422 Topology: Required data rate cannot be set

Message class: Error in the parameterization / configuration / commissioning procedure (18)

Message value: Component: %1, connection: %2, difference: %3

Component: None

Response: NONE

Acknowledgment: NONE

Explanation of the message value:

For %1

Component in target topology

For %2

Value	Cause	Remedy
0	Port 0	
1	Port 1	
2	Port 2	
3	Port 3	
4	Port 4	
5	Port 5	
6	Port 6	
7	Port 7	
8	Port 8	
9	Port 9	
10	X100	
11	X101	
12	X102	
13	X103	
14	X104	
15	X105	
20	X200	
21	X201	
22	X202	
23	X203	
24	X204	
25	X205	
40	X400	
41	X401	
42	X402	
50	X500	
51	X501	
52	X502	
53	X503	
54	X504	
55	X505	
56	X506	
57	X507	

For %3

Value	Cause	Remedy
1	Incorrect cable	Correct cable
2	Incorrect socket	Correct socket

Cause: The topology comparison identified differences in the data rate for the connection between two components.
Note:
The drive system is no longer booted. In this state, the drive control (closed-loop) cannot be enabled.

Remedy: Load a project that matches the hardware.

A01425 Topology: Serial number different

Message class: Error in the parameterization / configuration / commissioning procedure (18)

Message value: Component: %1, %2, differences: %3

Component: None

Response: NONE

Acknowledgment: NONE

Explanation of the message value: For %1
Component in target topology
For %2

Value	Cause	Remedy
0	Component unknown	
1	Control Unit	
2	Motor Module	
3	Line Module	
4	Sensor Module	
5	Voltage Sensing Module	
6	Terminal Module	
7	DRIVE-CLiQ Hub Module	
8	Controller Extension	
9	Filter module	
10	Hydraulic Module	
49	DRIVE-CLiQ component	
50	Option slot	
60	Encoder	
70	DRIVE-CLiQ motor	
71	Hydraulic cylinder	
72	Hydraulic valve	
80	Motor	

Cause: The topology comparison has detected differences in the actual and target topologies in relation to one component. The serial number is different.
Alarm value (r2124, interpret hexadecimal):
ddccbbaa hex:
dd = reserved
cc = number of differences (%3)
bb = component class (%2)
aa = component number (%1)
Note:
The component class is described in F01375.
The drive system is no longer booted. In this state, the drive control (closed-loop) cannot be enabled.

Remedy: Adapting topologies:
- Change over the actual topology to match the target topology.
- Load the target topology that matches the actual topology (commissioning tool).
Note:
Under "Topology --> Topology view" the commissioning tool where relevant offers improved diagnostics capability (e.g. setpoint/actual value comparison).

F01451 Topology: Target topology is invalid

Message class: Error in the parameterization / configuration / commissioning procedure (18)

Message value: %1

Component: None

Response: NONE

Acknowledgment: IMMEDIATELY

Cause: An error was detected in the target topology.
The target topology is invalid.
Fault value (r0949, interpret hexadecimal):
ccccbbaa hex: cccc = index error, bb = component number, aa = fault cause
aa = 1B hex = 27 dec: Error not specified.
aa = 1C hex = 28 dec: Value illegal.
aa = 1D hex = 29 dec: Incorrect ID.
aa = 1E hex = 30 dec: Incorrect ID length.
aa = 1F hex = 31 dec: Too few indices left.
aa = 20 hex = 32 dec: component is not connected to the converter.

Remedy: Download the target topology again using the commissioning tool.

A01481 (N) Topology: Internal communications faulted

Message class: Error in the parameterization / configuration / commissioning procedure (18)

Message value: Component: %1, to %2, %3, connection: %4

Component: None

Response: NONE

Acknowledgment: NONE

Explanation of the message value: For %1, %3

Component in target topology

For %2

Value	Cause	Remedy
0	Component unknown	
1	Control Unit	
2	Motor Module	
3	Line Module	
4	Sensor Module	
5	Voltage Sensing Module	
6	Terminal Module	
7	DRIVE-CLiQ Hub Module	
8	Controller Extension	
9	Filter module	
10	Hydraulic Module	
49	DRIVE-CLiQ component	
50	Option slot	
60	Encoder	
70	DRIVE-CLiQ motor	
71	Hydraulic cylinder	
72	Hydraulic valve	
80	Motor	

For %4

Value	Cause	Remedy
0	Port 0	
1	Port 1	
2	Port 2	
3	Port 3	
4	Port 4	
5	Port 5	
6	Port 6	
7	Port 7	
8	Port 8	
9	Port 9	
10	X100	
11	X101	
12	X102	
13	X103	
14	X104	
15	X105	
20	X200	
21	X201	
22	X202	
23	X203	
24	X204	
25	X205	
40	X400	
41	X401	

42	X402
50	X500
51	X501
52	X502
53	X503
54	X504
55	X505
56	X506
57	X507

Cause: Internal communications faulted.

Remedy:
- Carry out a POWER ON (switch-off/switch-on).
- Replace the device.

Response upon: N: NONE

Acknowl. upon N: NONE

A01486 Topology: Component not connected

Message class: Error in the parameterization / configuration / commissioning procedure (18)

Message value: Component: %1, to %2, %3, connection: %4

Component: None

Response: NONE

Acknowledgment: NONE

Explanation of the message value: For %1, %3

Component in target topology

For %2

Value	Cause	Remedy
0	Component unknown	
1	Control Unit	
2	Motor Module	
3	Line Module	
4	Sensor Module	
5	Voltage Sensing Module	
6	Terminal Module	
7	DRIVE-CLiQ Hub Module	
8	Controller Extension	
9	Filter module	
10	Hydraulic Module	
49	DRIVE-CLiQ component	
50	Option slot	
60	Encoder	
70	DRIVE-CLiQ motor	
71	Hydraulic cylinder	
72	Hydraulic valve	
80	Motor	

For %4

Value	Cause	Remedy
0	Port 0	
1	Port 1	
2	Port 2	
3	Port 3	
4	Port 4	
5	Port 5	
6	Port 6	
7	Port 7	
8	Port 8	
9	Port 9	
10	X100	
11	X101	
12	X102	
13	X103	
14	X104	
15	X105	
20	X200	
21	X201	
22	X202	
23	X203	
24	X204	
25	X205	
40	X400	
41	X401	

42	X402
50	X500
51	X501
52	X502
53	X503
54	X504
55	X505
56	X506
57	X507

Cause: The topology comparison has detected a component that is missing in the actual topology with respect to the target topology.
Alarm value (r2124, interpret hexadecimal):
ddccbbaa hex:
dd = connection number (%4)
cc = component number (%3)
bb = component class (%2)
aa = component number of the component that has not been inserted (%1)
Note:
The component is described in dd, cc and bb, where the component has not been inserted.
Component class and connection number are described in F01375.

Remedy: Adapting topologies:
- Insert the components involved at the right connection (correct the actual topology).
- Adapt the project/parameterizing in the commissioning tool (correct the target topology).
Check the hardware:
- Check the 24 V supply voltage.
- Check cables for interruption and contact problems.
- Check that the component is working properly.
Note:
Under "Topology --> Topology view" the commissioning tool where relevant offers improved diagnostics capability (e.g. setpoint/actual value comparison).

A01488 Topology: Encoder not connected

Message class: Error in the parameterization / configuration / commissioning procedure (18)

Message value: Component: %1, to %2, %3, connection: %4

Component: None

Response: NONE

Acknowledgment: NONE

Explanation of the message value: For %1, %3

Component in target topology

For %2

Value	Cause	Remedy
0	Component unknown	
1	Control Unit	
2	Motor Module	
3	Line Module	
4	Sensor Module	
5	Voltage Sensing Module	
6	Terminal Module	
7	DRIVE-CLiQ Hub Module	
8	Controller Extension	
9	Filter module	
10	Hydraulic Module	
49	DRIVE-CLiQ component	
50	Option slot	
60	Encoder	
70	DRIVE-CLiQ motor	
71	Hydraulic cylinder	
72	Hydraulic valve	
80	Motor	

For %4

Value	Cause	Remedy
0	Port 0	
1	Port 1	
2	Port 2	
3	Port 3	
4	Port 4	
5	Port 5	
6	Port 6	
7	Port 7	
8	Port 8	
9	Port 9	
10	X100	
11	X101	
12	X102	
13	X103	
14	X104	
15	X105	
20	X200	
21	X201	
22	X202	
23	X203	
24	X204	
25	X205	
40	X400	
41	X401	

42	X402
50	X500
51	X501
52	X502
53	X503
54	X504
55	X505
56	X506
57	X507

Cause: The topology comparison has detected an encoder that is missing in the actual topology with respect to the target topology.
Alarm value (r2124, interpret hexadecimal):
ddccbbaa hex:
dd = connection number (%4)
cc = component number (%3)
bb = component class (%2)
aa = component number of the component that has not been inserted (%1)
Note:
The component is described in dd, cc and bb, where the component has not been inserted.
Component class and connection number are described in F01375.

Remedy: Adapting topologies:
- Insert the components involved at the right connection (correct the actual topology).
- Adapt the project/parameterizing in the commissioning tool (correct the target topology).
Check the hardware:
- Check the 24 V supply voltage.
- Check cables for interruption and contact problems.
- Check that the component is working properly.
Note:
Under "Topology --> Topology view" the commissioning tool where relevant offers improved diagnostics capability (e.g. setpoint/actual value comparison).

A01489 Topology: Motor not connected

Message class: Error in the parameterization / configuration / commissioning procedure (18)

Message value: Component: %1, to %2, %3, connection: %4

Component: None

Response: NONE

Acknowledgment: NONE

Explanation of the message value: For %1, %3

Component in target topology

For %2

Value	Cause	Remedy
0	Component unknown	
1	Control Unit	
2	Motor Module	
3	Line Module	
4	Sensor Module	
5	Voltage Sensing Module	
6	Terminal Module	
7	DRIVE-CLiQ Hub Module	
8	Controller Extension	
9	Filter module	
10	Hydraulic Module	
49	DRIVE-CLiQ component	
50	Option slot	
60	Encoder	
70	DRIVE-CLiQ motor	
71	Hydraulic cylinder	
72	Hydraulic valve	
80	Motor	

For %4

Value	Cause	Remedy
0	Port 0	
1	Port 1	
2	Port 2	
3	Port 3	
4	Port 4	
5	Port 5	
6	Port 6	
7	Port 7	
8	Port 8	
9	Port 9	
10	X100	
11	X101	
12	X102	
13	X103	
14	X104	
15	X105	
20	X200	
21	X201	
22	X202	
23	X203	
24	X204	
25	X205	
40	X400	
41	X401	

42	X402
50	X500
51	X501
52	X502
53	X503
54	X504
55	X505
56	X506
57	X507

Cause: The topology comparison has detected a motor that is missing in the actual topology with respect to the target topology.
Alarm value (r2124, interpret hexadecimal):
ddccbbaa hex:
dd = connection number (%4)
cc = component number (%3)
bb = component class (%2)
aa = component number of the component that has not been inserted (%1)
Note:
The component is described in dd, cc and bb, where the component has not been inserted.
Component class and connection number are described in F01375.

Remedy: Adapting topologies:
- Insert the components involved at the right connection (correct the actual topology).
- Adapt the project/parameterizing in the commissioning tool (correct the target topology).
Check the hardware:
- Check the 24 V supply voltage.
- Check cables for interruption and contact problems.
- Check that the component is working properly.
Note:
Under "Topology --> Topology view" the commissioning tool where relevant offers improved diagnostics capability (e.g. setpoint/actual value comparison).

F01512 No scaling available

Message class: Error in the parameterization / configuration / commissioning procedure (18)
Message value: %1
Component: None
Response: OFF2
Acknowledgment: POWER ON
Cause: An attempt was made to determine a conversion factor for a scaling that does not exist.
Fault value (r0949, interpret decimal):
Unit (e.g. corresponding to SPEED) for which an attempt was made to determine a factor.
Remedy: Apply scaling or check the transfer value.

A01514 (F) Error when writing during a reconnect

Message class: Error in the parameterization / configuration / commissioning procedure (18)
Message value: Parameter: %1
Component: None
Response: NONE
Acknowledgment: NONE

Cause: During a reconnect operation (e.g. while booting or downloading - but can also occur in normal operation) a parameter was not able to be written to.
The parameter is then reset to the factory setting.

Alarm value (r2124, interpret decimal):
Parameter number

Remedy: Not necessary.

Response upon: F: NONE

Acknowl. upon F: IMMEDIATELY

A01550 Security: Drive data encryption invalid

Message class: Hardware/software error (1)

Message value: -

Component: Control Unit (CU)

Response: NONE

Acknowledgment: NONE

Cause: The password for drive data encryption (DDE) does not match the password configured in the converter or no password was configured.
The DDE password protects sensitive data on the SD card.
It is not possible to transfer the data backup from the SD card.

Remedy: To be able to restore the data backup on the SD card, the DDE password must correspond to the password that was originally configured for the data backup in the original converter:
- With the SD card inserted, enter the correct DDE password in the Security Wizard of the web server and restart the converter.
- In Startdrive, with the SD card inserted, under Online & Diagnostics, enter the correct DDE password in screen form "Specify password for encryption of the drive data" and restart the converter.

If the data backup on the SD card is not be used:
- Remove the SD card from the converter and restart the converter.

Notice: Not observing this and continuing to work at the converter can lead to the data backup on the SD card being lost.

C01600 SI: STO self test failed

Message class: Safety monitoring channel has identified an error (10)

Message value: %1

Variant: S200 PTI

Component: None

Response: OFF2

Acknowledgment: IMMEDIATELY

Cause: "Safety Integrated Functions" identified a fault in the self test of the switch-off signal path, and initiated an STO (Safe Torque Off).
Message value (r60049, interpret decimal):
1005: STO active, although STO not selected and there is no internal STO active.
1010: STO inactive, although STO is selected or an internal STO is active.
1015: The self test in operation was unsuccessful.
1016: Error in the communication path for brake/F-DI/F-DO/STO
1017: Error in the communications path for the control.

Remedy:
- Select STO and then de-select again.
- Carry out a POWER ON (switch-off/switch-on) for all components.
- Upgrade software to a later version.
- Contact Technical Support.

C01603 SI: Module temperature - limit value exceeded

Message class: Safety monitoring channel has identified an error (10)
Message value: -
Variant: S200 PTI
Component: None
Response: OFF2
Acknowledgment: IMMEDIATELY
Cause: A safe monitoring function has detected that the module temperature has exceeded a limit value. STO (Safe Torque Off) was initiated to maintain the safe state.
Remedy:
- Check the ambient air temperature.
- Check the module fan.
- Operate the module in the permissible range.

F01604 SI: Safety EEPROM data error

Message class: Safety monitoring channel has identified an error (10)
Message value: %1
Variant: S200 PTI
Component: Control Unit (CU)
Response: OFF2
Acknowledgment: POWER ON
Cause: Safety relevant EEPROM data are not correct.
This fault results in an STO (Safe Torque Off).

Fault value (r0949, interpret decimal): Only for internal Siemens fault diagnostics.
Remedy: Replace the module.

A01605 SI: Checksum error has occurred

Message class: Safety monitoring channel has identified an error (10)
Message value: %1
Variant: S200 PTI
Component: Control Unit (CU)
Response: NONE
Acknowledgment: NONE
Cause: A checksum error (CRC error) has occurred in the converter program memory.
Alarm value (r2124, interpret decimal):
Only for internal Siemens troubleshooting.
Remedy:
- Carry out a POWER ON (switch-off/switch-on).
- Upgrade firmware to later version.
- Contact Technical Support.

F01606 SI: Safety HW version incorrect

Message class: Safety monitoring channel has identified an error (10)
Message value: %1
Variant: S200 PTI
Component: Control Unit (CU)
Response: OFF2
Acknowledgment: POWER ON

Cause: Safety relevant hardware version is not compatible with this software.
This fault results in an STO (Safe Torque Off).

Fault value (r0949, interpret decimal): Only for internal Siemens fault diagnostics.

Remedy: Update the software or exchange the module for this software.

A01637 (F) SI: Safety configuration not protected

Message class: Error in the parameterization / configuration / commissioning procedure (18)
Message value: -
Variant: S200 PTI
Component: None
Response: NONE
Acknowledgment: NONE
Cause: Safety configuration is not protected using UMAC (User Management and Access Control).
Remedy: Activate UMAC and assign the rights for changing the "Edit Safety Integrated application" safety configuration to a specific user that is saved with user name and password.
Response upon: F: NONE
Acknowl. upon F: IMMEDIATELY

A01641 (F, N) SI: Component exchange identified and save necessary

Message class: General drive fault (19)
Message value: Fault cause: %1
Variant: S200 PTI
Component: Control Unit (CU)
Response: NONE
Acknowledgment: NONE
Explanation of the message value: For %1

Bit	Cause	Remedy
0	It was identified that the drive was replaced	
4	It was identified that the sensor module was replaced	
5	It was identified that the sensor was replaced	

Cause: "Safety Integrated" identified that a component has been replaced.
No additional stop response is initiated, and therefore the operation of the specific drive is not restricted.
When "Safety Integrated Functions" are active, after a component has been replaced a partial acceptance test must be performed.
Alarm value (r2124, interpret binary).

Remedy: - Retentively save all parameters (p0977 = 1).
- Acknowledge fault.
See also: r9776 (SI diagnostics)

Response upon: F: NONE
Acknowl. upon F: IMMEDIATELY
Response upon: N: NONE
Acknowl. upon N: NONE

F01646 SI: Change logbook

Message class: Safety monitoring channel has identified an error (10)
Message value: %1
Variant: S200 PTI

Component: Control Unit (CU)
Response: OFF2
Acknowledgment: IMMEDIATELY
Cause: The saved functional safety checksum (r9780[0]) or hardware-related safety checksum (r9780[1]) differs from the safety checksum calculated when running up or a previously calculated safety checksum was not found.
An acceptance test is required as changes have been made to a safety parameter or the safety hardware.
Fault value (r0949, interpret decimal):
1: The safety logbook has identified that a functional safety checksum has changed. An acceptance test is required.
2: The safety logbook has identified that a hardware-related safety checksum has changed. An acceptance test is required.
Remedy: For fault value = 1:
- Carry out an acceptance test and generate an acceptance report.
For fault value = 2:
- Carry out the function checks for the modified hardware and generate an acceptance report.
Note:
The procedure when carrying out an acceptance test as well as an example of the acceptance report are provided in the Safety Integrated product documentation.

C01649 SI: Internal software error

Message class: Hardware/software error (1)
Message value: Module: %1, line: %2
Variant: S200 PTI
Component: Control Unit (CU)
Response: OFF2
Acknowledgment: IMMEDIATELY
Cause: An internal error has occurred in the Safety Integrated software.
Note:
This message results in an STO (Safe Torque Off) that cannot be acknowledged.
Message value (r60049, interpret hexadecimal): Only for internal Siemens fault diagnostics.
Remedy: - Carry out a POWER ON (switch-off/switch-on) for all components.
- Repeat commissioning of "Safety Integrated" and carry out a POWER ON.
- Upgrade firmware to later version.
- Contact Technical Support.
- Replace hardware component.

F01650 SI: Acceptance test required

Message class: Safety monitoring channel has identified an error (10)
Message value: %1
Variant: S200 PTI
Component: Control Unit (CU)
Response: OFF2
Acknowledgment: IMMEDIATELY
Cause: "Safety Integrated Functions" requires an acceptance test.
Message value (r0949, interpret decimal):
2003: Acceptance test is required as a safety parameter has been changed.
Remedy: For message value = 2003:
- Carry out an acceptance test and generate an acceptance report.
The procedure when carrying out an acceptance test as well as an example of the acceptance report are provided in the product operating instructions.

F01661 SI: Simulation of the safety inputs active

Message class: General drive fault (19)
Message value: Fault cause: %1 bin
Variant: S200 PTI
Component: Control Unit (CU)
Response: OFF2
Acknowledgment: IMMEDIATELY
Cause: The simulation of the digital inputs is active (p0795).
It is not permissible that safety inputs are simulated.
Message value (r0949, interpret binary):
The displayed bits indicate which digital inputs must not be simulated.
Remedy: - Deactivate the simulation of the digital inputs for the safety inputs (p0795).
- Acknowledge message.

C01668 SI: Checksum error safety monitoring functions

Message class: Safety monitoring channel has identified an error (10)
Message value: %1
Variant: S200 PTI
Component: Control Unit (CU)
Response: OFF2
Acknowledgment: IMMEDIATELY
Cause: The actual checksum calculated by the drive and entered in r10098 via the safety-relevant parameters does not match the reference checksum saved in p10099 at the last machine acceptance.
Safety-relevant parameters have been changed or a fault is present.
Note:
This message results in an STO (Safe Torque Off).
Message value (r60049, only for internal Siemens diagnostics)
Remedy: - Carry out safety commissioning.
- Carry out an acceptance test.

C01677 SI: Incorrect onboard F-I/O parameter value

Message class: Error in the parameterization / configuration / commissioning procedure (18)
Message value: Parameter: %1, supplementary information: %2
Variant: S200 PTI
Component: None
Response: NONE
Acknowledgment: IMMEDIATELY

Cause:

The parameter cannot be parameterized with this value.
Note:
This message does not result in a safety stop response.
Message value (r60049, interpret decimal): yyyyxxxx dec:
yyyy = supplementary information
xxxx = parameter

yyyy = 0:
No additional information available.

xxxx = 10000 and
yyyy = F-DI number:
A non-existent F-DI was enabled.

xxxx = 10002:
The F-DI discrepancy time (p10002) is less than or equal to the SI monitoring clock cycle.

xxxx = 10017 and
yyyy = F-DI number:
The input filter (p10017) is less than or equal to (p10018 + 2ms) when simultaneously selecting "Self test using specified dark pulses" (p10041[y] = 1).

xxxx = 10018 and
yyyy = F-DI number:
Setting "F-DI self test length dark pulses" (p10018) is zero when simultaneously selecting "Self test using specified dark pulses" (p10041[y] = 1).

xxxx = 10041 and
yyyy = F-DI number:
An invalid value was set in "F-DI self test mode selection" (p10041[y]).

xxxx = 10071 and
yyyy = F-DI number:
An F-DI status r10071[y], which was not enabled in p10000, was set.

Remedy:

Correct the parameter value.
For xxxx = 10000 and yyyy = F-DI number:
- Correct "SI F-DI enable" (p10000).
For xxxx = 10002:
- Set "SI F-DI switchover discrepancy time" (p10002) greater than the "SI monitoring clock cycle".
For xxxx = 10017 and yyyy = F-DI number:
- Set "SI digital inputs input filter" (p10017) greater than (p10018 + 2 ms)
- Change "SI F-DI self test mode selection" (p10041[y])
For xxxx = 10018 and yyyy = F-DI number:
- Set "SI F-DI self test length dark pulses" (p10018) greater than zero.
- Change p10041[y] "SI F-DI self test mode selection".
For xxxx = 10041 and yyyy = F-DI number:
- Change "SI F-DI self test mode selection" (p10041[y])
For xxxx = 10071 and yyyy = F-DI number:
- Correct "SI F-DI enable" (p10000).

C01680 SI: Checksum error safety monitoring functions

Message class: Safety monitoring channel has identified an error (10)

Message value: %1
Variant: S200 PTI
Component: Control Unit (CU)
Response: OFF2
Acknowledgment: IMMEDIATELY
Cause: The actual checksum over the safety-relevant parameters, calculated by the drive, does not match the reference checksum last saved for the last machine acceptance test.
Safety-relevant parameters have been changed or a fault is present.
Note:
This message results in an STO (Safe Torque Off).
Message value (r60049, only for internal Siemens diagnostics)
Remedy: - Check the safety-relevant parameters and if required, correct.
- Retentively save parameters.
- Carry out a POWER ON (switch-off/switch-on) if safety parameters requiring a POWER ON were modified.
- Carry out an acceptance test.

C01681 SI: Incorrect parameter value

Message class: Error in the parameterization / configuration / commissioning procedure (18)
Message value: Parameter: %1, supplementary information: %2
Variant: S200 PTI
Component: None
Response: OFF2
Acknowledgment: IMMEDIATELY
Cause: The parameter cannot be parameterized with this value.
Note:
This message results in an STO.

Message value (r60049, interpret decimal):
yyyyxxxx dec: yyyy = supplementary information, xxxx = parameter
yyyy = 0:
No additional information available.
xxxx = 9603:
The type of control displayed under additional information is not permissible for p9603 on this device.
xxxx = 10022 or 10023:
An inadmissible signal source for the control via F-DI was set.
Remedy: Carry out a POWER ON (switch-off/switch-on) for all components.

C01682 SI: Monitoring function not supported

Message class: Error in the parameterization / configuration / commissioning procedure (18)
Message value: %1
Variant: S200 PTI
Component: None
Response: OFF2
Acknowledgment: IMMEDIATELY

Cause: At least one of the monitoring functions enabled in p9604 is not supported with this firmware version on this device.

Note:

The message value (r60049, interpret binary) indicates the bits of the monitoring functions, which form this firmware version on this device, are not supported. If several, non-supported monitoring functions are simultaneously enabled, then these are all displayed in the message value.

This message results in an STO (Safe Torque Off).

See also: p9604 (SI enable)

Remedy: Correct parameter p9604 so that monitoring functions only permitted for this firmware version and for this device are enabled.

See also: p9604 (SI enable)

C01690 SI: Data backup problem for the NVRAM

Message class: Hardware/software error (1)

Message value: %1

Variant: S200 PTI

Component: Control Unit (CU)

Response: OFF2

Acknowledgment: POWER ON

Cause: When saving parameters r9780, r9781 and r9782 (Safety logbook) says, an error has occurred in conjunction with the NVRAM.

Note:

This message does not result in a safety stop response.

Message value (r60049, interpret decimal):

1: There is no physical NVRAM in the drive.

2: There is no longer any free memory space in the NVRAM.

Remedy: For message value = 1:

- Replace the hardware.

For message value = 2:

- De-select functions that are not required and that take up memory space in the NVRAM.
- Contact Technical Support.

Note:

NVRAM: Non-Volatile Random Access Memory (non-volatile read and write memory)

A01698 (F) SI: Commissioning mode active

Message class: General drive fault (19)

Message value: -

Variant: S200 PTI

Component: Control Unit (CU)

Response: NONE

Acknowledgment: NONE

Cause: "Safety Integrated" commissioning is selected.

This message is withdrawn after the safety functions have been commissioned.

Note:

- This message does not result in a safety stop response.
- In the safety commissioning mode, function STO (Safe Torque Off) is internally selected.

Remedy: Not necessary.

Response upon: F: NONE

Acknowl. upon F: IMMEDIATELY

C01700	SI: STO (Safe Torque Off) initiated
Message class:	Safety monitoring channel has identified an error (10)
Message value:	-
Variant:	S200 PTI
Component:	None
Response:	OFF2
Acknowledgment:	IMMEDIATELY
Cause:	The drive is stopped using STO (Safe Torque Off). Possible causes: Subsequent response, following messages: C01701, C01711.
Remedy:	Carry out diagnostics for the active messages (C01701, C01711).

C01701	SI: SS1 (Safe Stop 1) initiated
Message class:	Safety monitoring channel has identified an error (10)
Message value:	-
Variant:	S200 PTI
Component:	None
Response:	OFF3
Acknowledgment:	IMMEDIATELY
Cause:	The drive is stopped using SS1 (Safe Stop 1) (braked along the OFF3 down ramp). As a result of this message, after the time parameterized in p9556 has expired, STO (Safe Torque Off) is initiated. Possible causes: Subsequent response to message C01711.
Remedy:	Carry out diagnostics for the active messages (C01711).

C01711	SI: SCF (Safety Channel Failure) initiated
Message class:	Safety monitoring channel has identified an error (10)
Message value:	-
Variant:	S200 PTI
Component:	None
Response:	NONE
Acknowledgment:	IMMEDIATELY
Cause:	The drive has detected an error in a safe monitoring function and has initiated SCF (Safety Channel Failure). Monitoring functions are no longer reliable. Safe operation not possible. Possible causes: Subsequent response to message C01769. Note: This message results in an SS1 (Safe Stop 1), and as a consequence STO (Safe Torque Off) is initiated.
Remedy:	Carry out diagnostics for the active messages (C01769).

C01769	SI: Error for data cross-check
Message class:	Error in the parameterization / configuration / commissioning procedure (18)
Message value:	%1
Variant:	S200 PTI
Component:	None
Response:	NONE
Acknowledgment:	IMMEDIATELY

Cause: When carrying out a data cross-check between the two monitoring channels, the drive detected a difference between parameters or results and initiated an SCF (Safety Channel Failure). One of the monitoring functions no longer functions reliably, i.e. safe operation is no longer possible.

Safety message C01711 is also displayed as SCF (Safety Channel Failure) has been initiated.

Remedy:
- Carry out a POWER ON (switch-off/switch-on) for all components.
- Recommission "Safety Integrated" and carry out a POWER ON.
- Upgrade firmware to later version.
- Contact Technical Support.
- Replace the hardware.

C01770 SI: Fault of the failsafe inputs

Message class: Safety monitoring channel has identified an error (10)

Message value: Fault cause: %1, F-DI number: %2

Variant: S200 PTI

Component: Control Unit (CU)

Response: NONE

Acknowledgment: IMMEDIATELY

Explanation of the message value: For %1

Value	Cause	Remedy
1	Discrepancy error (state between two monitoring channels different for too long)	Check the F-DI wiring
2	Too many switching operations	Reduce the switching frequency
3	Test pulse error	Check the F-DI wiring
4	Internal software error	

Cause: The failsafe digital inputs (F-DI) have a fault condition.

Message value (r60049, interpret hexadecimal):

yyyyxxxx hex

xxxx: number of the failsafe digital input (F-DI).

yyyy: fault cause

Note:

If several faults occur consecutively, then this message is only signaled for the first fault that occurs.

Remedy:

- Check the wiring of the F-DI (contact problems).
- If the wiring is correct, and for example there is no wire breakage, then a check must be made as to whether the switching frequency at F-DI is too high and must therefore be reduced (switching pulses must have a longer time between them). The time interval between each signal edge at an F-DI must be at least equal to the discrepancy time before the input is switched again.

Note:

This message can be acknowledged via F-DI (safe acknowledgment).

Discrepancy errors of an F-DI can only be acknowledged if safe acknowledgment was carried out after the cause of the error was resolved (extended message acknowledgment, self acknowledgment). As long as safety acknowledgment was not carried out, the corresponding F-DI stays in the safe state internally.

A self acknowledgment for an F-DI can be realized using a positive edge at the corresponding F-DI.

Sets the discrepancy time for fast switching operations at the F-DIs:

For fast switching operations at the failsafe digital inputs (F-DI), it may be necessary to adapt the discrepancy time to the switching frequency:

- The period of a cyclic switching pulse must be less than half of the discrepancy time (if necessary, round down).
- The time between two fast switching pulses should be longer than the discrepancy time (if necessary, round up).
- The discrepancy time must be greater or equal to the SI monitoring clock cycle (it must always be rounded up or down to be an integer multiple of the SI monitoring clock cycle).

If an input filter has been parameterized (p10017 > 0), then the shortest possible discrepancy time is directly specified by the input filter.

- The period of a cyclic switching pulse must be less than half of the discrepancy time p10017 (if necessary, round down).
- The time between two fast switching pulses should be longer than the discrepancy time+p10017 (if necessary, round up).
- The discrepancy time must be greater or equal to the SI monitoring clock cycle. The input filter must always be set less than the discrepancy time.

Self test with specified dark pulses (p10041 > 0) for long cable lengths:

- Increase the dark pulse length (p10018 or p10019).
- Increase the input filter (p10017).

Note:

F-DI: Failsafe Digital Input

C01793 SI: Internal safety message buffer is full

Message class: Safety monitoring channel has identified an error (10)

Message value: %1

Variant: S200 PTI

Component: None

Response: NONE

Acknowledgment: IMMEDIATELY

Cause: Too many safety messages have occurred within a short time so that some have not been able to be displayed.

Remedy: No remedy required

F01800 (A) Internal communications faulted

Message class: Internal (DRIVE-CLiQ) communication error (12)

Message value: %1

Component: None

Response: NONE

Acknowledgment: IMMEDIATELY

Cause:

Remedy: Replace the component involved.

Response upon: A: NONE

Acknowl. upon A: NONE

A01902 PN: Isochronous operation parameterization not permissible

Message class: Error in the parameterization / configuration / commissioning procedure (18)

Message value: %1

Component: None

Response: NONE

Acknowledgment: NONE

Cause: Parameterization for isochronous operation is not permissible.
Alarm value (r2124, interpret decimal):
0: Bus cycle time Tdp < 0.5 ms.
1: Bus cycle time Tdp > 32 ms.
2: Bus cycle time Tdp is not an integer multiple of the current controller sampling time.
3: Instant of the actual value sensing Ti > Bus cycle time Tdp or Ti = 0.
4: Instant of the actual value sensing Ti is not an integer multiple of the current controller sampling time.
5: Instant of the setpoint acceptance To >= Bus cycle time Tdp or To = 0.
6: Instant of the setpoint acceptance To is not an integer multiple of the current controller sampling time.
7: Controller application cycle time Tmapc is not an integer multiple of the speed controller sampling time.
8: Bus reserve bus cycle time Tdp - Data exchange time Tdx less than two current controller sampling times.
10: Instant of the setpoint acceptance To <= data exchange time Tdx + current controller sampling time
11: Controller application cycle time Tmapc > 14 x Tdp or Tmapc = 0.
12: PLL tolerance window Tpll_w > Tpll_w_max.
13: Bus cycle time Tdp is not a multiple of the speed controller clock cycle.

Remedy: - Adapt the bus parameterization Tdp, Ti, To.
- Adapt the sampling time for the current controller or speed controller.
For alarm value = 10:
- Reduce Tdx by using fewer bus participants or shorter telegrams.
Note:
PN: PROFINET

A01904 (F, N) PN: Controller setting of the PZD telegram rejected

Message class: Communication error to the higher-level control system (9)

Message value: %1

Component: None

Response: NONE

Acknowledgment: NONE

Cause: A controller attempts to set a PZD telegram. The setting is not applied.
Alarm value (r2124, interpret decimal):
1: Project contains free telegram interconnections.
2: Controller specifies a combination of fixed and free telegrams.
3: Controllers have no function rights for making changes.
4: Telegram cannot be set as a result of the drive configuration.

Remedy: Check and align the telegram settings in the drive project and in the controller.
For alarm value = 4:
- Align telegram and control mode (closed-loop speed control/basic positioner).

Response upon: F: NONE

Acknowl. upon F: IMMEDIATELY

Response upon: N: NONE

Acknowl. upon N: NONE

A01905 (N) PN: Controller setting to activate the channel diagnostics rejected

Message class: Communication error to the higher-level control system (9)
Message value: %1
Component: Control Unit (CU)
Response: NONE
Acknowledgment: NONE
Cause: A controller attempted to change the activation of the channel diagnostics. The setting is not applied as the controller does not have the function rights to make a change.
Alarm value (r2124, interpret decimal):
1: Channel diagnostics are activated. Controller attempts to deactivate them.
2: Channel diagnostics are not activated. Controller attempts to activate them.
Remedy: Activate channel diagnostics in the bus configuration and check and align function rights in the drive.
Response upon: N: NONE
Acknowl. upon N: NONE

F01910 (N, A) Fieldbus: Setpoint timeout

Message class: Communication error to the higher-level control system (9)
Message value: -
Variant: S200 PTI
Component: None
Response: OFF3
Acknowledgment: IMMEDIATELY
Cause: The reception of setpoints from the fieldbus interface (PROFINET) is interrupted.
- Bus connection interrupted.
- Controller switched off.
- Controller set into the STOP state.
Remedy: Restore the bus connection and set the controller to RUN.
Response upon: N: NONE
Acknowl. upon N: NONE
Response upon: A: NONE
Acknowl. upon A: NONE

F01911 (N, A) PN: Isochronous operation, clock cycle failure

Message class: Communication error to the higher-level control system (9)
Message value: -
Component: None
Response: OFF1
Acknowledgment: IMMEDIATELY
Cause: The telegram to synchronize the clock cycles has failed for several bus clock cycles or in several bus clock cycles has consecutively violated the specified time grid (see bus cycle time, Tdp and Tpllw).
Remedy: - Check the physical bus configuration (cable, connector, terminating resistor, shielding, etc.).
- Check whether communication was briefly or permanently interrupted.
- Check the utilization level of the bus and controller (e.g. bus cycle time Tdp was set too short).
Note:
PN: PROFINET
Response upon: N: NONE
Acknowl. upon N: NONE
Response upon: A: NONE
Acknowl. upon A: NONE

F01912 (N, A) PN: Isochronous operation sign-of-life missing

Message class: Communication error to the higher-level control system (9)
Message value: -
Component: None
Response: OFF1
Acknowledgment: IMMEDIATELY
Cause: The maximum permissible number of errors in the controller sign-of-life (isochronous operation) has been exceeded in cyclic operation.
Remedy: - Check the physical bus configuration (cables, connectors, etc.).
- Check whether the controller correctly sends the sign-of-life (e.g. create a trace with STW2.12 ... STW2.15 and trigger signal ZSW1.3).
- Check the permissible telegram failure rate (p0925).
- Check the utilization level of the bus and controller (e.g. bus cycle time Tdp was set too short).
Note:
PN: PROFINET
Response upon: N: NONE
Acknowl. upon N: NONE
Response upon: A: NONE
Acknowl. upon A: NONE

F01916 Internal communications error

Message class: Communication error to the higher-level control system (9)
Message value: -
Component: None
Response: OFF1
Acknowledgment: IMMEDIATELY
Cause: An internal Ethernet communications error has occurred.
Remedy: - Carry out a POWER ON (switch-off/switch-on) for all components.
- Upgrade firmware to later version.
- Contact Technical Support.

F01917 Internal communications error

Message class: Communication error to the higher-level control system (9)
Message value: -
Component: None
Response: OFF1
Acknowledgment: IMMEDIATELY
Cause: An internal PROFINET communications error has occurred.
Remedy: - Carry out a POWER ON (switch-off/switch-on) for all components.
- Upgrade firmware to later version.
- Contact Technical Support.

A01932 PN: Isochronous mode missing for DSC

Message class: Error in the parameterization / configuration / commissioning procedure (18)
Message value: -
Component: None
Response: NONE
Acknowledgment: NONE

Cause: There is no isochronous mode or isochronous sign of life and DSC is selected.
Note:
DSC: Dynamic Servo Control

Remedy: Set isochronous mode across the bus configuration and transfer isochronous sign-of-life.

A01940 PB/PN: Clock cycle synchronism not reached

Message class: Communication error to the higher-level control system (9)

Message value: -

Component: None

Response: NONE

Acknowledgment: NONE

Cause: The bus is in the data exchange state and clock synchronous operation has been selected using the parameterizing telegram. Synchronization with the clock cycle specified by the controller was still not able to be performed.
- The controller does not send an isochronous telegram, although isochronous operation was selected when configuring the bus.
- The controller uses another isochronous bus clock cycle than was transferred to the device in the parameterizing telegram.

Remedy: - Check the controller application and bus configuration.
- Check the consistency between the clock cycle input when configuring the device and clock cycle setting at the controller.
Note:
PB: PROFIBUS
PN: PROFINET

A01941 PN: Clock cycle signal missing when the bus is being established

Message class: Communication error to the higher-level control system (9)

Message value: -

Component: None

Response: NONE

Acknowledgment: NONE

Cause: The bus is in the data exchange state and clock synchronous operation has been selected using the parameterizing telegram. The synchronization telegram is not received.

Remedy: Check the controller application and bus configuration.
Note:
PN: PROFINET

A01943 PN: Clock cycle signal error when the bus is being established

Message class: Communication error to the higher-level control system (9)

Message value: -

Component: None

Response: NONE

Acknowledgment: NONE

Cause: The bus is in the data exchange state and clock synchronous operation has been selected using the parameterizing telegram.
The synchronization telegram is irregularly received.
- The controller sends an irregular synchronization telegram.
- The controller uses another isochronous bus clock cycle than was transferred to the device in the parameterizing telegram.

Remedy:
- Check the controller application and bus configuration.
- Check the consistency between the clock cycle input when configuring the device and clock cycle setting at the controller.

Note:
PN: PROFINET

A01944 PN: Sign-of-life synchronism not reached

Message class: Communication error to the higher-level control system (9)
Message value: -
Component: None
Response: NONE
Acknowledgment: NONE
Cause: The bus is in the data exchange state and clock synchronous operation has been selected using the parameterizing telegram.
Synchronization with the controller sign-of-life (STW2.12 ... STW2.15) could not be completed because the sign-of-life changes differently to how it was configured in the Tmapc time grid.
Remedy: - Ensure that the controller correctly increments the sign-of-life in the controller application clock cycle Tmapc.
Note:
PN: PROFINET

F01950 (N, A) PN: Isochronous operation, synchronization unsuccessful

Message class: Communication error to the higher-level control system (9)
Message value: -
Component: None
Response: OFF1
Acknowledgment: IMMEDIATELY
Cause: Synchronization of the internal clock cycle to the controller clock cycle has failed. The internal clock cycle exhibits an unexpected shift.
Remedy: Only for internal Siemens troubleshooting.
Note:
PN: PROFINET
Response upon: N: NONE
Acknowl. upon N: NONE
Response upon: A: NONE
Acknowl. upon A: NONE

A02000 Function generator: Start not possible

Message class: Error in the parameterization / configuration / commissioning procedure (18)
Message value: -
Component: None
Response: NONE
Acknowledgment: NONE
Cause: The function generator has already been started.
Remedy: Stop the function generator and restart again if necessary.
Note:
The alarm is reset as follows:
- Remove the cause of this alarm.
- Restart the function generator.

A02006 Function generator: No drive specified for connection

Message class: Error in the parameterization / configuration / commissioning procedure (18)
Message value: -
Component: None
Response: NONE
Acknowledgment: NONE
Cause: No drive specified for connection was specified.
Remedy: At least one drive to be connected must be specified.
Note:
The alarm is reset as follows:
- Remove the cause of this alarm.
- Restart the function generator.

A02010 Function generator: Speed setpoint from the drive is not zero

Message class: Error in the parameterization / configuration / commissioning procedure (18)
Message value: -
Component: None
Response: NONE
Acknowledgment: NONE
Cause: The speed setpoint of a drive selected for connection is greater than the value for the standstill detection set using p1226.
Remedy: For all of the drives specified for connection, set the speed setpoints to zero.
Note:
The alarm is reset as follows:
- Remove the cause of this alarm.
- Restart the function generator.

A02020 Function generator: Parameter cannot be changed

Message class: Error in the parameterization / configuration / commissioning procedure (18)
Message value: -
Component: None
Response: NONE
Acknowledgment: NONE
Cause: This parameter setting cannot be changed when the function generator is active.
Remedy: - Stop the function generator before parameterizing.
- Possibly start the function generator.
Note:
The alarm is reset as follows:
- Remove the cause of this alarm.
- Restart the function generator.

A02026 Function generator: Pulse width too high

Message class: Error in the parameterization / configuration / commissioning procedure (18)
Message value: -
Component: None
Response: NONE
Acknowledgment: NONE
Cause: The selected pulse width is too high.
The pulse width must be less than the period duration.

Remedy: Reduce pulse width.
Note:
The alarm is reset as follows:
- Remove the cause of this alarm.
- Restart the function generator.

A02030 Function generator: Physical address equals zero

Message class: Error in the parameterization / configuration / commissioning procedure (18)
Message value: -
Component: None
Response: NONE
Acknowledgment: NONE
Cause: The specified physical address is zero.
Remedy: Set a physical address with a value other than zero.
Note:
The alarm is reset as follows:
- Remove the cause of this alarm.
- Restart the function generator.

A02040 Function generator: Illegal value for offset

Message class: Error in the parameterization / configuration / commissioning procedure (18)
Message value: -
Component: None
Response: NONE
Acknowledgment: NONE
Cause: The value for the offset is higher than the value for the upper limit or lower than the value for the lower limit.
Remedy: Adjust the offset value accordingly.
Note:
The alarm is reset as follows:
- Remove the cause of this alarm.
- Restart the function generator.

A02041 Function generator: Illegal value for bandwidth

Message class: Error in the parameterization / configuration / commissioning procedure (18)
Message value: -
Component: None
Response: NONE
Acknowledgment: NONE
Cause: The bandwidth referred to the time slice clock cycle of the function generator has either been set too low or too high.
Depending on the time slice clock cycle, the bandwidth is defined as follows:
Bandwidth_max = 1 / (2 x time slice clock cycle)
Bandwidth_min = Bandwidth_max / 100000
Example:
Assumption: Time slice clock cycle = 125 µs
--> Bandwidth_max = 1 / (2 x 125 µs) = 4000 Hz
--> Bandwidth_min = 4000 Hz / 100000 = 0.04 Hz

Remedy: Check the value for the bandwidth and adapt accordingly.
Note:
The alarm is reset as follows:
- Remove the cause of this alarm.
- Restart the function generator.

A02047 Function generator: Time slice clock cycle invalid

Message class: Error in the parameterization / configuration / commissioning procedure (18)
Message value: -
Component: None
Response: NONE
Acknowledgment: NONE
Cause: The time slice clock cycle selected does not match any of the existing time slices.
Remedy: Enter an existing time slice clock cycle. The fastest cycle time can be read out using the commissioning tool.
Note:
The alarm is reset as follows:
- Remove the cause of this alarm.
- Restart the function generator.

A02050 Trace: Start not possible

Message class: Error in the parameterization / configuration / commissioning procedure (18)
Message value: -
Component: None
Response: NONE
Acknowledgment: NONE
Cause: The trace has already been started.
Remedy: Stop the trace and, if necessary, start again.

A02055 Trace: Recording time too short

Message class: Error in the parameterization / configuration / commissioning procedure (18)
Message value: -
Component: None
Response: NONE
Acknowledgment: NONE
Cause: The trace duration is too short.
The minimum is twice the value of the trace clock cycle.
Remedy: Check the selected recording time and, if necessary, adjust.

A02056 Trace: Recording cycle too short

Message class: Error in the parameterization / configuration / commissioning procedure (18)
Message value: -
Component: None
Response: NONE
Acknowledgment: NONE
Cause: The selected recording clock cycle is shorter than the selected basic clock cycle 0.
Remedy: Increase the value for the trace cycle. The fastest cycle time can be read out using the commissioning tool.

A02057 Trace: Time slice clock cycle invalid

Message class: Error in the parameterization / configuration / commissioning procedure (18)

Message value: -
Component: None
Response: NONE
Acknowledgment: NONE
Cause: The time slice clock cycle selected does not match any of the existing time slices.
Remedy: Enter an existing time slice clock cycle. The fastest cycle time can be read out using the commissioning tool.

A02059 Trace: Time slice clock cycle for 2 x 8 recording channels not valid

Message class: Error in the parameterization / configuration / commissioning procedure (18)
Message value: -
Component: None
Response: NONE
Acknowledgment: NONE
Cause: The selected time slice clock cycle cannot be used for more than 4 recording channels.
Remedy: Enter the clock cycle of an existing time slice with a cycle time >= 4 ms or reduce the number of recording channels to 4 per trace.
The fastest cycle time can be read out using the commissioning tool.

A02060 Trace: Signal to be traced missing

Message class: Error in the parameterization / configuration / commissioning procedure (18)
Message value: -
Component: None
Response: NONE
Acknowledgment: NONE
Cause: - A signal to be traced was not specified.
- The specified signals are not valid.
Remedy: - Specify the signal to be traced.
- Check whether the relevant signal can be traced.

A02062 Trace: Invalid trigger signal

Message class: Error in the parameterization / configuration / commissioning procedure (18)
Message value: -
Component: None
Response: NONE
Acknowledgment: NONE
Cause: - A trigger signal was not specified.
- The specified signal does not exist.
- The specified signal is not a fixed-point signal.
- The specified signal cannot be used as a trigger signal for the trace.
Remedy: Specify a valid trigger signal.

A02063 Trace: Invalid data type

Message class: Error in the parameterization / configuration / commissioning procedure (18)
Message value: %1
Component: None
Response: NONE
Acknowledgment: NONE
Cause: The specified data type to select a signal using a physical address is invalid.
Remedy: Use a valid data type.

A02070 Trace: Parameter cannot be changed

Message class: Error in the parameterization / configuration / commissioning procedure (18)
Message value: -
Component: None
Response: NONE
Acknowledgment: NONE
Cause: The trace parameter settings cannot be changed when the trace is active.
Remedy: - Stop the trace before parameterization.
- If required, start the trace.

A02075 Trace: Pretrigger time too long

Message class: Error in the parameterization / configuration / commissioning procedure (18)
Message value: -
Component: None
Response: NONE
Acknowledgment: NONE
Cause: The selected pretrigger time must be shorter than the trace time.
Remedy: Check the pretrigger time setting and change if necessary.

F02080 Trace: Parameterization deleted due to unit changeover

Message class: Error in the parameterization / configuration / commissioning procedure (18)
Message value: -
Component: None
Response: NONE
Acknowledgment: IMMEDIATELY
Cause: The trace parameterization in the converter was deleted due to a unit changeover or a change in the reference parameters.
Remedy: Restart trace.

A02085 Message function: Parameterization error

Message class: Error in the parameterization / configuration / commissioning procedure (18)
Message value: Parameter: %1, index:%2
Component: Power Unit
Response: NONE
Acknowledgment: NONE
Cause: A parameterization error was identified when starting the variable message function.
Alarm value (r2124, interpret decimal):
yyxxxx dec: yy = index, xxxx = parameter
Remedy: Correct the parameter and restart.
Note:
The alarm is automatically withdrawn when stopping, or when successfully starting the variable message function.

A02096 MTrace 0: Cannot be saved

Message class: Error in the parameterization / configuration / commissioning procedure (18)
Message value: %1
Component: None
Response: NONE
Acknowledgment: NONE

Cause: It is not possible to save the measurement results of a multiple trace on the memory card (trace recorder 0).
A multiple trace is not started or is canceled.
Alarm value (r2124, interpret decimal):
1: Memory card cannot be accessed.
- Card is not inserted or is blocked by a mounted USB drive.
3: Data save operation to slow.
- A second trace has been completed before the measurement results of the first trace were able to be saved.
- Writing the measurement result files to the card is blocked by the parameter save.
4: Data save operation canceled.
- For instance, the file required for the data save operation was not able to be found.

Remedy:
- Insert or remove the memory card.
- Use a larger memory card.
- Configure a longer trace time or use an endless trace.
- Avoid saving parameters while a multiple trace is running.
- Check whether other functions are presently accessing measurement result files.

A02098 MTrace 1: Cannot be saved

Message class: Error in the parameterization / configuration / commissioning procedure (18)

Message value: %1

Component: None

Response: NONE

Acknowledgment: NONE

Cause: It is not possible to save the measurement results of a multiple trace on the memory card (trace recorder 1).
A multiple trace is not started or is canceled.
Alarm value (r2124, interpret decimal):
1: Memory card cannot be accessed.
- Card is not inserted or is blocked by a mounted USB drive.
3: Data save operation to slow.
- A second trace has been completed before the measurement results of the first trace were able to be saved.
- Writing the measurement result files to the card is blocked by the parameter save.
4: Data save operation canceled.
- For instance, the file required for the data save operation was not able to be found.

Remedy:
- Insert or remove the memory card.
- Use a larger memory card.
- Configure a longer trace time or use an endless trace.
- Avoid saving parameters while a multiple trace is running.
- Check whether other functions are presently accessing measurement result files.

A02099 Trace: Insufficient Control Unit memory

Message class: Error in the parameterization / configuration / commissioning procedure (18)

Message value: -

Component: None

Response: NONE

Acknowledgment: NONE

Cause: The memory space still available on the Control Unit is no longer sufficient for the trace function.

Remedy: Reduce the memory required, e.g. as follows:
- Reduce the trace time.
- Increase the trace clock cycle.
- Reduce the number of signals to be traced.

F02151 (A) TEC: Internal software error

Message class: Hardware/software error (1)
Message value: %1
Component: None
Response: OFF2
Acknowledgment: IMMEDIATELY
Cause: An internal software error has occurred within a Technology Extension.
Fault value (r0949, interpret hexadecimal):
Only relevant for internal fault diagnostics.
Remedy: - Carry out a POWER ON (switch-off/switch-on) for all components.
- Upgrade firmware to later version.
- Contact Technical Support.
- Replace the Control Unit.
Note:
TEC: Technology Extension
Response upon: A: NONE
Acknowl. upon A: NONE

F02152 (A) TEC: Insufficient memory

Message class: Hardware/software error (1)
Message value: %1
Component: None
Response: OFF1
Acknowledgment: IMMEDIATELY
Cause: The functionality on the converter is too extensive (e.g. functions, data sets, Technology Extensions, blocks, etc.).
Fault value (r0949, interpret decimal):
Only for internal Siemens troubleshooting.
Remedy: Contact Technical Support.
Response upon: A: NONE
Acknowl. upon A: NONE

F02153 TEC: Technology function does not exist

Message class: Hardware/software error (1)
Message value: -
Component: None
Response: OFF2
Acknowledgment: IMMEDIATELY
Cause: A technology function does not exist on the converter or the particular version is too old.
When configuring, a technology function is activated, which either does not exist on the converter or is only available in an outdated version. This can occur when downloading a project or when powering up.
Remedy: - Load the required technology function or version to the converter.
- If required, deactivate the technology function not required in the configuration.

F03001 NVRAM checksum incorrect

Message class: Hardware/software error (1)
Message value: %1
Component: Control Unit (CU)
Response: NONE

Acknowledgment: IMMEDIATELY
Cause: A checksum error occurred when evaluating the non-volatile data (NVRAM) on the converter.
The NVRAM data affected was deleted.
Remedy: Carry out a POWER ON (switch-off/switch-on) for all components.

F03505 (N, A) Analog input wire breakage

Message class: External measured value / signal state outside the permissible range (16)
Message value: %1
Variant: S200 PTI
Component: Terminal Module (TM)
Response: OFF1
Acknowledgment: IMMEDIATELY
Cause: The wire-break monitoring for an analog input has responded.
Remedy: Check the wiring for interruptions.
Response upon: N: NONE
Acknowl. upon N: NONE
Response upon: A: NONE
Acknowl. upon A: NONE

A03520 (F, N) Temperature sensor fault

Message class: External measured value / signal state outside the permissible range (16)
Message value: %1
Variant: S200 PTI
Component: Terminal Module (TM)
Response: NONE
Acknowledgment: NONE
Cause: When evaluating the temperature sensor, an error occurred.
Alarm value (r2124, interpret decimal):
1: Wire breakage or sensor not connected (KTY: R > 1630 Ohm).
2: Measured resistance too low (PTC: R < 20 Ohm, KTY: R < 50 Ohm).
Remedy: - Make sure that the sensor is connected correctly.
- Replace the sensor.
Response upon: F: NONE
Acknowl. upon F: IMMEDIATELY
Response upon: N: NONE
Acknowl. upon N: NONE

F06310 (A) Supply voltage (p0210) incorrectly parameterized

Message class: Line supply fault (2)
Message value: -
Component: None
Response: NONE
Acknowledgment: IMMEDIATELY
Cause: For AC/AC drive units, the measured DC link voltage lies outside the tolerance range after precharging has been completed.
The following applies for the tolerance range: 1.16 * p0210 < r0070 < 1.6 * p0210
Note:
The fault can only be acknowledged when the drive is switched off.
See also: p0210 (Device supply voltage)

Remedy: - Check the parameterized supply voltage and if required change (p0210).
- Check the line voltage.
See also: p0210 (Device supply voltage)

Response upon: A: NONE

Acknowl. upon A: NONE

F07011 Drive: Motor overtemperature

Message class: Motor overload (8)

Message value: %1

Component: Motor

Response: OFF2

Acknowledgment: IMMEDIATELY

Cause: The calculated motor temperature is too high.
Possible causes:
- Motor overloaded.
- Motor ambient temperature too high.
- Sensor wire breakage.
Fault value (r0949, interpret decimal):
200:
Motor temperature model 1 (I2t): temperature too high.
300:
Motor temperature model 3: after the monitoring time has expired, the temperature is still higher than the alarm threshold.
301:
Motor temperature model 3: temperature is too high, or the model has not been parameterized.
302:
Motor temperature model 3: Encoder temperature is not within the valid range.
400:
Additional motor overload protection: the load is too high.

Remedy: - Reduce the motor load.
- Check the ambient temperature and the motor ventilation.
- Check the wiring and temperature sensor connection.
- Check monitoring limits.
- Check activation of the additional motor overload protection (5375).

A07012 (N) Drive: Motor temperature model overtemperature

Message class: Motor overload (8)

Message value: %1

Component: Motor

Response: NONE

Acknowledgment: NONE

Cause: Motor temperature model 1/3 or the additional motor overload protection identified that the alarm threshold was exceeded.
Hysteresis:2K
Alarm value (r2124, interpret decimal):
200:
Motor temperature model 1 (I2t): temperature too high.
300:
Motor temperature model 3: temperature too high.
400:
Additional motor overload protection: the load is too high. If the load remains at this level, the drive is shut down with fault F07011.
See also: r0034, p0613

Remedy: - Check the motor load and if required, reduce.
- Check the motor ambient temperature.
- Check activation of the additional motor overload protection (p5375).
See also: r0034 (Motor utilization thermal)

Response upon: N: NONE

Acknowl. upon N: NONE

F07082 Macro: Execution not possible

Message class: Error in the parameterization / configuration / commissioning procedure (18)

Message value: Fault cause: %1, supplementary information: %2, preliminary parameter number: %3

Component: None

Response: NONE

Acknowledgment: IMMEDIATELY

Cause: The macro cannot be executed.
Fault value (r0949, interpret hexadecimal):
ccccbbaa hex:
cccc = preliminary parameter number, bb = supplementary information, aa = fault cause
Fault causes for the trigger parameter itself:
19: Called file is not valid for the trigger parameter.
20: Called file is not valid for parameter 15.
21: Called file is not valid for parameter 700.
22: Called file is not valid for parameter 1000.
23: Called file is not valid for parameter 1500.
24: Data type of a TAG is incorrect (e.g. Index, number or bit is not U16).
Fault causes for the parameters to be set:
25: Error level has an undefined value.
26: Mode has an undefined value.
27: A value was entered as string in the tag value that is not "DEFAULT".
31: Entered drive object type unknown.
32: A device was not able to be found for the determined drive object number.
34: A trigger parameter was recursively called.
35: It is not permissible to write to the parameter via macro.
36: Check, writing to a parameter unsuccessful, parameter can only be read, not available, incorrect data type, value range or assignment incorrect.
37: Source parameter for a signal interconnection was not able to be determined.
38: An index was set for a non-indexed (or CDS-dependent) parameter.
39: No index was set for an indexed parameter.
41: A bit operation is only permissible for parameters with the parameter format DISPLAY_BIN.
42: A value not equal to 0 or 1 was set for a bit operation.
43: Reading the parameter to be changed by the bit operation was unsuccessful.
51: Factory setting for DEVICE may only be executed on the DEVICE.
61: The setting of a value was unsuccessful.

Remedy: - Check the parameter involved.
- Check the macro file and signal interconnection.

F07084 Macro: Condition for WaitUntil not fulfilled

Message class: Error in the parameterization / configuration / commissioning procedure (18)
Message value: Parameter: %1
Component: None
Response: NONE
Acknowledgment: IMMEDIATELY
Cause: Only for internal Siemens troubleshooting.
Remedy: Not necessary.

F07085 Drive: Open-loop/closed-loop control parameters changed

Message class: Error in the parameterization / configuration / commissioning procedure (18)
Message value: Parameter: %1
Component: None
Response: NONE
Acknowledgment: IMMEDIATELY

Cause: Open-loop/closed-loop control parameters have had to be changed.
Possible causes:
1. As a result of other parameters, they have exceeded the dynamic limits.
2. They cannot be used due to the fact that the hardware detected not having certain features.
3. The value is estimated as the thermal time constant is missing.
4. Motor temperature model 1 is activated as thermal motor protection is missing.
See also: p1082 (Maximum speed)

Remedy: Not necessary.
It is not necessary to change the parameters as they have already been correctly limited.

F07086 Units changeover: Parameter limit violation due to reference value change

Message class: Error in the parameterization / configuration / commissioning procedure (18)

Message value: Parameter: %1

Component: None

Response: NONE

Acknowledgment: IMMEDIATELY

Cause: A reference parameter was changed in the system. This resulted in the fact that for the parameters involved, the set value was not able to be written in the per unit notation.
The values of the parameters were set to the corresponding violated minimum limit/maximum limit or to the factory setting.
Possible causes:
- The steady-state minimum limit/maximum limit or that defined in the application was violated.
Fault value (r0949, parameter):
Diagnostics parameter to display the parameters that were not able to be re-calculated.
See also: p0304, p0305, p2000, p2001, p2002, p2003, p2004

Remedy: Check the adapted parameter value and if required correct.

F07088 Units changeover: Parameter limit violation due to units changeover

Message class: Error in the parameterization / configuration / commissioning procedure (18)

Message value: Parameter: %1

Component: None

Response: NONE

Acknowledgment: IMMEDIATELY

Cause: A changeover of units was initiated. This resulted in a violation of a parameter limit
Possible causes for the violation of a parameter limit:
- When rounding off a parameter corresponding to its decimal places, the steady-state minimum limit or maximum limit was violated.
- Inaccuracies for the data type "FloatingPoint".
In these cases, when the minimum limit is violated then the parameter value is rounded up and when the maximum limited is violated the parameter value is rounded down.
Fault value (r0949, interpret decimal).

Remedy: Check the adapted parameter values and if required correct.

A07089 Unit switchover: Function activation is blocked because the units have been switched over

Message class: Error in the parameterization / configuration / commissioning procedure (18)

Message value: -

Component: None

Response: NONE

Acknowledgment: NONE

Cause: An attempt was made to activate a function. This is not permissible if the units have already been changed over.

Remedy: Restore units that have been changed over to the factory setting.

F07090 Drive: Upper torque limit less than the lower torque limit

Message class: Error in the parameterization / configuration / commissioning procedure (18)
Message value: -
Component: None
Response: OFF2
Acknowledgment: IMMEDIATELY
Cause: The upper torque limit is lower than the lower torque limit.
Remedy: When setting the torque limits via telegram 750, the positive torque limit must be >= the negative torque.

A07091 Drive: Determined current controller dynamic response invalid

Message class: Error in the parameterization / configuration / commissioning procedure (18)
Message value: %1
Component: Control Unit (CU)
Response: NONE
Acknowledgment: NONE
Cause: When One Button Tuning is activated (p5300 = 1), the current controller is measured after the pulses have been enabled. Evaluation has indicated that the current control loop was not appropriately set.
Possible causes:
- Incorrectly set current controller.
- PRBS amplitude set too high (p5296).
Alarm value (r2124, interpret hexadecimal):
1: Dynamic response too low.
2: Current controller unstable.
Note:
PRBS: Pseudo Random Binary Signal (binary noise)
Remedy: - The measurement can be repeated with a smaller excitation amplitude (p5296).

A07092 Drive: Moment of inertia estimator still not ready

Message class: Error in the parameterization / configuration / commissioning procedure (18)
Message value: %1
Component: Control Unit (CU)
Response: NONE
Acknowledgment: NONE
Cause: The moment of inertia estimator has still not determined any valid values.
The acceleration cannot be calculated.
The moment of inertia estimator has stabilized, if the frictional values as well as the moment of inertia were determined and the corresponding status signal is set.
Remedy: Traverse the axis until the moment of inertia estimator has stabilized.
This alarm is automatically withdrawn after the moment of inertia estimator has stabilized.

F07093 (A) Drive: Test signal error

Message class: Error in the parameterization / configuration / commissioning procedure (18)
Message value: %1
Component: Control Unit (CU)
Response: OFF3
Acknowledgment: IMMEDIATELY

Cause: An error was identified when executing the "Test signal" function.
The function was not executed or was canceled.
Fault value (r0949, interpret decimal):
1: No distance limit has been defined (p5308 = 0).
2: The moment of inertia estimator has not stabilized in the parameterized time (p5309).
3: The parameterized distance (p5308) was exceeded.
4: No motor encoder parameterized (closed-loop speed control without encoder).
6: Pulse enable was withdrawn while traversing.
7: Speed setpoint not equal to zero.
See also: p5308, p5309

Remedy: For fault value = 1:
- Define distance limiting (p5308).
For fault value = 2:
- Increase the duration, distance limit or speed limit (p5309, p5308, p1082, p1083, p1086).
For fault value = 3:
- Check distance limiting (p5308).
For fault value = 4:
- Configure speed control with encoder.
For fault value = 6:
- Keep the drive switched on until the "Test signal" function has been completely exited.
For fault value = 7:
- Set the speed setpoint to zero. It is possible that the setpoint was specified from the control panel.

Response upon: A: NONE

Acknowl. upon A: NONE

F07094 General parameter limit violation

Message class: Hardware/software error (1)

Message value: Parameter: %1

Component: None

Response: NONE

Acknowledgment: IMMEDIATELY

Cause: As a result of the violation of a parameter limit, the parameter value was automatically corrected.
Minimum limit violated --> parameter is set to the minimum value.
Maximum limit violated --> parameter is set to the maximum value.
Invalid Enum value --> parameter is set to the default value.
Fault value (r0949, interpret decimal):
Parameter number, whose value had to be adapted.

Remedy: Check the adapted parameter values and if required correct.

A07095 (N) Drive: One Button Tuning activated

Message class: Error in the parameterization / configuration / commissioning procedure (18)

Message value: -

Component: None

Response: NONE

Acknowledgment: NONE

Cause: The One Button Tuning function is active.
One Button Tuning is performed at the next switch-on command.
See also: p5300 (Autotuning selection)

Remedy: Not necessary.
The alarm is automatically withdrawn after One Button Tuning has been exited (p5300 = 0).

Response upon: N: NONE
Acknowl. upon N: NONE

F07097 (A) Drive: Test signal error distance limiting

Message class: Error in the parameterization / configuration / commissioning procedure (18)
Message value: Fault cause: %1, traversing distance: %2
Component: Control Unit (CU)
Response: OFF3
Acknowledgment: IMMEDIATELY
Cause: An error was identified when executing function "Test signal" or One Button Tuning selection (p5300 = 1).
The function was not executed or was canceled.
Fault value (r0949, interpret decimal):
yyyyxxxx hex: yyyy = fault cause, xxxx = traversing distance.
See also: p5308, p5309
Remedy: - Enter the traversing path in parameter p5308 - or deselect the function involved in p5301.
- For fault cause = 1, 2, shorter traversing paths may be possible.
For fault cause = 1:
- Deselect bit 0 and bit 1 in parameter p5301.
For fault cause = 2:
- Deselect bit 2 in parameter p5301.
For fault cause = 3:
- Deselect bit 4 and bit 5 in parameter p5301.
Response upon: A: NONE
Acknowl. upon A: NONE

A07200 Drive: Master control ON command present

Message class: Error in the parameterization / configuration / commissioning procedure (18)
Message value: -
Component: None
Response: NONE
Acknowledgment: NONE
Cause: The ON/OFF1 command is present (no 0 signal).
The command is influenced via control word bit 0 via the master control.
Remedy: Switch the signal via control word bit 0 via the master control to 0.

F07217 (N, A) PTI: A/B/R signal inversion error

Message class: Position/speed actual value incorrect or not available (11)
Message value: Fault cause: %1 bin
Component: None
Response: OFF1
Acknowledgment: IMMEDIATELY
Cause: For PTI input, signal A*, B* is not inverted with respect to signal A, B.
Fault value (r0949, interpret binary):
Bit 16: Error track A.
Bit 17: Error track B.
Remedy: Check the PTI cable.
Response upon: N: NONE
Acknowl. upon N: NONE
Response upon: A: NONE

Acknowl. upon A: NONE

F07220 (N, A) Drive: Control by PLC missing

Message class: Communication error to the higher-level control system (9)
Message value: -
Component: None
Response: OFF1
Acknowledgment: IMMEDIATELY
Cause: The "Control by PLC" signal was missing in operation.
- The higher-level control has withdrawn the "Control by PLC" signal.
- Data transfer via the fieldbus (controller/drive) was interrupted.

Remedy: - Check the "Control by PLC" signal and, if required, switch in.
- Check data transfer via the fieldbus (controller/drive).

Note:
If the drive should continue to operate after withdrawing "Control by PLC", then the fault response must be parameterized to NONE or the message type should be parameterized as alarm.

Response upon: N: NONE
Acknowl. upon N: NONE
Response upon: A: NONE
Acknowl. upon A: NONE

A07350 (F) Drive: Measuring probe parameterized to a digital output

Message class: Error in the parameterization / configuration / commissioning procedure (18)
Message value: %1
Component: None
Response: NONE
Acknowledgment: NONE
Cause: The measuring probe is connected to a parameterizable digital input/output and the terminal is set as output.
Alarm value (r2124, interpret decimal):
8: DI/DO 8 (X122.9/X132.1)
9: DI/DO 9 (X122.10/X132.2)
10: DI/DO 10 (X122.12/X132.3)
11: DI/DO 11 (X122.13/X132.4)
12: DI/DO 12 (X132.9)
13: DI/DO 13 (X132.10)
14: DI/DO 14 (X132.12)
15: DI/DO 15 (X132.13)
Regarding the terminal designation:
The first designation is valid for CU320, the second for CU305.

Remedy: - Deselect measuring probe (p0488, p0489).
Response upon: F: OFF1
Acknowl. upon F: IMMEDIATELY

F07410 Drive: Current controller output limited

Message class: Application/technological function faulted (17)
Message value: -
Component: None
Response: OFF2
Acknowledgment: IMMEDIATELY

Cause: The condition "I_act = 0 and Uq_set_1 longer than 16 ms at its limit" is present and can be caused by the following:
- Motor not connected or motor contactor open.
- Phase failure in the motor feeder cable.
- No DC link voltage present.
- Power unit defective.

Remedy:
- Connect the motor, check the motor feeder cable or check the motor contactor.
- Check the DC link voltage (r0070).
- Check the power unit.

F07412 Drive: Commutation angle incorrect (motor model)

Message class: Position/speed actual value incorrect or not available (11)

Message value: %1

Component: None

Response: ENCODER

Acknowledgment: IMMEDIATELY

Cause: An incorrect commutation angle was detected, which can result in a positive coupling in the speed controller.
Possible causes:
- The phase sequence of the output phases for the motor is incorrect (e.g. the phases are interchanged).
- The motor encoder is incorrectly adjusted with respect to the magnet position.
- The motor encoder is damaged.
- The motor encoder speed signal is faulted.
- The control loop is instable due to incorrect parameterization.
- Phase failure in the motor feeder cable.

Remedy:
- Check the phase sequence for the motor, and if required, correct.
- Check the motor feeder cable.
- If the encoder mounting was changed, re-adjust the encoder.
- Replace the defective motor and/or motor encoder.

F07419 Drive: Current setpoint filter adaptation error

Message class: Error in the parameterization / configuration / commissioning procedure (18)

Message value: %1

Component: None

Response: OFF1

Acknowledgment: IMMEDIATELY

Cause: An error has occurred when configuring or when using the "Current setpoint filter adaptation" function.
Fault value (r0949, interpret binary):
Bit 2: the assigned filter is a type or has a characteristic, which is unsuitable for adaptation.
Bit 3: the assigned filter has not been activated (p1656).
Bits 0, 1, 4 ... 31: internal fault occurred.

Remedy: The remedy should be applied depending on the fault value.
For bit 2:
Set the filter type "General filter 2nd order" and set the characteristic of a bandstop filter.
For bit 3:
Activate filter (p1656).
For bits 0, 1, 4 ... 15:
- Carry out a POWER ON (switch-off/switch-on) for all components.
- Upgrade firmware to later version.

F07420 Drive: Current setpoint filter natural frequency > Shannon frequency

Message class: Error in the parameterization / configuration / commissioning procedure (18)
Message value: %1
Component: None
Response: NONE
Acknowledgment: IMMEDIATELY
Cause: One of the filter natural frequencies is greater than the Shannon frequency.
The Shannon frequency is calculated according to the following formula: 0.5 / current controller sampling time
Fault value (r0949, interpret binary):
Bit 0: Filter 1 (p1658, p1660)
Bit 1: Filter 2 (p1663, p1665)
Bit 2: Filter 3 (p1668, p1670)
Bit 3: Filter 4 (p1673, p1675)
Remedy: - Reduce the numerator or denominator natural frequency of the current setpoint filter involved.
- Deactivate the filter involved (p1656).

F07421 Drive: Speed filter natural frequency > Shannon frequency

Message class: Error in the parameterization / configuration / commissioning procedure (18)
Message value: %1
Component: None
Response: NONE
Acknowledgment: IMMEDIATELY
Cause: One of the filter natural frequencies is greater than the Shannon frequency.
The Shannon frequency is calculated according to the following formula: 0.5 / speed controller sampling time.
Fault value (r0949, interpret binary):
Bit 0: Filter 1 (p1417, p1419)
Bit 1: Filter 2 (p1423, p1425)
Remedy: - Reduce the numerator or denominator natural frequency of the speed setpoint filter involved.
- Deactivate the filter involved (p1414).

F07422 Drive: Reference model natural frequency > Shannon frequency

Message class: Error in the parameterization / configuration / commissioning procedure (18)
Message value: -
Component: None
Response: NONE
Acknowledgment: IMMEDIATELY
Cause: The natural filter frequency of the PT2 element for the reference model (p1433) is greater than the Shannon frequency.
The Shannon frequency is calculated according to the following formula: 0.5 / speed controller sampling time.
Remedy: - Reduce the natural frequency of PT2 element for reference model (p1433).

F07432 Drive: Motor without overvoltage protection

Message class: Error in the parameterization / configuration / commissioning procedure (18)
Message value: %1
Component: None
Response: OFF2
Acknowledgment: IMMEDIATELY
Cause: In the case of a fault at maximum speed, the motor can generate an overvoltage that can destroy the converter.

Remedy: Limit the maximum speed (p1082) without any additional protection.
Note:
The maximum speed is calculated as follows:
p1082 <= 11.695 * DC link voltage overvoltage threshold/r0316
DC link voltage overvoltage threshold:
- Line connection 1 AC: 410 V
- Line connection 3 AC: 820 V
See also: r0316 (Motor torque constant), p1082 (Maximum speed)

F07434 Drive: It is not possible to change the direction of rotation with the pulses enabled

Message class: Application/technological function faulted (17)
Message value: -
Component: None
Response: OFF2
Acknowledgment: IMMEDIATELY
Cause: With the pulses enabled, a drive data set that has a different parameterized direction of rotation was selected (p1821).
It is only possible to change the motor direction of rotation using p1821 when the pulses are inhibited.
Remedy: - Change over the drive data set with the pulses inhibited.
- Ensure that the changeover to a drive data set does not result in the motor direction of rotation being changed (i.e. for these drive data sets, the same value must be in p1821).
See also: p1821 (Direction of rotation)

A07440 EPOS: Jerk time is limited

Message class: Error in the parameterization / configuration / commissioning procedure (18)
Message value: -
Component: None
Response: NONE
Acknowledgment: NONE
Cause: The calculation of the jerk time Tr = max(p2572, p2573) / p2574 resulted in an excessively high value so that the jerk time is internally limited to 1000 ms.
Note:
The alarm is also output if jerk limiting is not active.
Remedy: - Increase the jerk limiting (p2574).
- Reduce maximum acceleration or maximum deceleration (p2572, p2573).
See also: p2572, p2573, p2574

A07441 LR: Save the position offset of the absolute encoder adjustment

Message class: Error in the parameterization / configuration / commissioning procedure (18)
Message value: -
Component: None
Response: NONE
Acknowledgment: NONE

Cause: The status of the absolute encoder adjustment has changed.
To permanently accept the determined position offset, it must be retentively saved (p0977).
Possible causes:
- Motor or encoder were replaced (applies to EQN and DQI).
- Position-relevant parameters were changed.
- A non-adjusted encoder was adjusted (retentively save the project).
Note:
This message is not output when switching-on the axis after having first moved it in the switched-off state, as long as the parameterizable monitoring window was not exited.

Remedy: Readjust the encoder.
See also: p2507 (LR absolute encoder adjustment status)

F07442 (A) LR: Multiturn does not match the modulo range

Message class: Error in the parameterization / configuration / commissioning procedure (18)
Message value: -
Component: None
Response: OFF1
Acknowledgment: IMMEDIATELY
Cause: The ratio between the multiturn resolution and the modulo range (p2576) is not an integer number.
This results in the adjustment being set back, as the position actual value cannot be reproduced after switch-off/ switch-on.
Remedy: Make the ratio between the multiturn resolution and the modulo range an integer number.
The ratio v is calculated as follows:
1. Without position tracking for the load gearbox
v = (p0421 * p2506 * p2505) / (p2504 * p2576)
2. With position tracking for the load gearbox
v = (p2721 * p2506) / p2576
See also: p0421, p2504, p2505, p2506, p2576, p2721
Response upon: A: NONE
Acknowl. upon A: NONE

F07443 (A) LR: Home position not in the permissible range

Message class: Error in the parameterization / configuration / commissioning procedure (18)
Message value: %1
Component: None
Response: OFF1
Acknowledgment: IMMEDIATELY
Cause: The home position received when adjusting the encoder (p2599) lies outside the half of the encoder range and cannot be set as actual axis position.
Fault value (r0949, interpret decimal):
Maximum permissible value for the home position
Remedy: Set the home position to a lower value than was specified in the fault value.
See also: c2598 (EPOS home position signal), p2599 (EPOS home position value)
Response upon: A: NONE
Acknowl. upon A: NONE

F07446 (A) Load gearbox: Position tracking cannot be reset

Message class: Application/technological function faulted (17)
Message value: %1
Component: None

Response: OFF1
Acknowledgment: IMMEDIATELY
Cause: The position tracking cannot be reset.
Remedy: Reset the position tracking as follows:
- Select encoder commissioning.
- Reset position tracking, position (p2720.2 = 1).
- Deselect encoder commissioning.

Then acknowledge the fault and, if necessary, re-adjust the absolute encoder (p2507).
Response upon: A: NONE
Acknowl. upon A: NONE

F07447 Load gearbox: Position tracking, maximum actual value exceeded

Message class: Application/technological function faulted (17)
Message value: Component number: %1, encoder data set: %2, drive data set: %3
Component: None
Response: NONE
Acknowledgment: IMMEDIATELY
Cause: When the position tracking of the load gearbox is configured, the drive/encoder (motor encoder) identifies a maximum possible absolute position actual value (r2723) that can no longer be represented within 32 bits.
Maximum value: p0408 * p2721 * 2^p0419
Fault value (r0949, interpret hexadecimal):
ccbbaa hex
aa = encoder data set
bb = component number
cc = drive data set
See also: p0408, p0419, p2721
Remedy: - Reduce the fine resolution (p0419).
- Reduce the multiturn resolution (p2721).

See also: p0419 (Fine resolution absolute value Gx_XIST2 (in bits)), p2721 (Load gear rotary absolute encoder revolutions virtual)

F07448 (A) Load gearbox: Position tracking, linear axis has exceeded the maximum range

Message class: Application/technological function faulted (17)
Message value: -
Component: None
Response: OFF1
Acknowledgment: IMMEDIATELY
Cause: For a configured linear axis/no modulo axis, the currently active motor encoder has exceeded the maximum possible traversing range.
For the configured linear axis, the maximum traversing range is defined to be 64x (+/- 32x) of p0421. It should be read in p2721 and interpreted as the number of load revolutions.
Remedy: The fault should be resolved as follows:
- Select commissioning.
- Reset position tracking, position (p2720.2 = 1).
- Deselect commissioning.

The fault should then be acknowledged and the absolute encoder adjusted.
Response upon: A: NONE
Acknowl. upon A: NONE

F07449 (A) Load gearbox: Position tracking actual position outside tolerance window

Message class: Application/technological function faulted (17)

Message value: %1

Component: None

Response: OFF1

Acknowledgment: IMMEDIATELY

Cause: When switched off, the currently effective motor encoder was moved through a distance greater than was parameterized in the tolerance window. It is possible that there is no longer any reference between the mechanical system and encoder.

Fault value (r0949, interpret decimal):
Deviation (difference) to the last encoder position in increments of the absolute value after the measuring gearbox - If one is being used. The sign designates the traversing direction.
Note:
The deviation (difference) found is also displayed in r2724.
See also: p2722 (Load gear position tracking tolerance window), r2724 (Load gear position difference)

Remedy: Reset the position tracking as follows:
- Select commissioning.
- Reset position tracking, position (p2720.2 = 1).
- Deselect commissioning.

The fault should then be acknowledged and, if necessary, the absolute encoder adjusted (p2507).
See also: p2507 (LR absolute encoder adjustment status)

Response upon: A: NONE

Acknowl. upon A: NONE

F07450 (A) LR: Standstill monitoring has responded

Message class: Application/technological function faulted (17)

Message value: -

Component: None

Response: OFF1

Acknowledgment: IMMEDIATELY

Cause: After the standstill monitoring time (p2543) expired, the drive left the standstill window (p2542).
- Standstill window set too small (p2542).
- Standstill monitoring time set too low (p2543).
- Position loop gain too low (p2538).
- Position loop gain too high (instability/oscillation, p2538).
- Mechanical overload.
- Connecting cable, motor/drive converter incorrect (phase missing, interchanged).

Remedy: Check the causes and resolve.

Response upon: A: NONE

Acknowl. upon A: NONE

F07451 (A) LR: Position monitoring has responded

Message class: Application/technological function faulted (17)

Message value: -

Component: None

Response: OFF1

Acknowledgment: IMMEDIATELY

Cause: When the position monitoring time (p2545) expired, the drive had still not reached the positioning window (p2544).
- Positioning window parameterized too small (p2544).
- Position monitoring time parameterized too short (p2545).
- Position loop gain too low (p2538).
- Position loop gain too high (instability/oscillation, p2538).
- Drive mechanically locked.

Remedy: Check the causes and resolve.

Response upon: A: NONE

Acknowl. upon A: NONE

F07452 (A) LR: Following error too high

Message class: Application/technological function faulted (17)

Message value: -

Component: None

Response: OFF1

Acknowledgment: IMMEDIATELY

Cause: The difference between the position setpoint position actual value (following error dynamic model, r2563) is higher than the tolerance (p2546).
- The drive torque or accelerating capacity exceeded.
- Position measuring system fault.
- Encoder cable interrupted.
- Position control sense incorrect.
- Mechanical system locked.
- Excessively high traversing velocity or excessively high position reference value (setpoint) differences.

Remedy: Check the causes and resolve.

Response upon: A: NONE

Acknowl. upon A: NONE

F07453 LR: Position actual value preprocessing error

Message class: Application/technological function faulted (17)

Message value: -

Component: None

Response: OFF1

Acknowledgment: IMMEDIATELY

Cause: - A fault of the position measuring system selected in p2502 (e.g.: F3x110, F3x111) has occurred or this encoder has been parked (G1_ZSW.14).

Remedy: - Remove the causes of the faults of the position measuring system selected in p2502 and acknowledge.
- Unpark the encoder.

See also: p2502 (LR encoder assignment)

A07454 LR: Position actual value preprocessing does not have a valid encoder

Message class: Error in the parameterization / configuration / commissioning procedure (18)

Message value: -

Component: None

Response: NONE

Acknowledgment: NONE

Cause: One of the following problems has occurred with the position actual value preprocessing:
- An encoder is not assigned for the position actual value preprocessing (p2502 = 0).
- An encoder and an encoder data set have been assigned, however, the encoder data set does not contain any encoder data (p0400 = 0) or invalid data (e.g. p0408 = 0).

Remedy: Check the drive data sets, encoder data sets and encoder assignment.
See also: p0400 (Encoder type selection), p2502 (LR encoder assignment)

A07455 EPOS: Maximum velocity limited

Message class: Error in the parameterization / configuration / commissioning procedure (18)
Message value: -
Component: None
Response: NONE
Acknowledgment: NONE
Cause: The maximum velocity (p2571) is too high to correctly calculate the modulo correction.
Within the sampling time for positioning, at the maximum velocity, a maximum of the half modulo length must be moved through. p2571 was limited to this value.
Remedy: - Reduce the maximum velocity (p2571).

A07456 EPOS: Setpoint velocity limited

Message class: Application/technological function faulted (17)
Message value: -
Component: None
Response: NONE
Acknowledgment: NONE
Cause: The actual setpoint velocity is greater than the parameterized maximum velocity (p2571) and is therefore limited.
Remedy:
- Check the specified setpoint velocity.
- Reduce the velocity override (c2646).
- Increase the maximum velocity (p2571).

A07457 EPOS: Combination of input signals illegal

Message class: Application/technological function faulted (17)
Message value: %1
Component: None
Response: NONE
Acknowledgment: NONE
Cause: An illegal combination of input signals that are simultaneously set was identified.
Alarm value (r2124, interpret decimal):
0: Jog 1 and jog 2 (c2589, c2590).
1: Jog 1 or jog 2 and direct setpoint input/MDI (c2589, c2590, c2647).
2: Jog 1 or jog 2 and start homing (c2589, c2590, c2595).
3: Jog 1 or jog 2 and activate traversing task (c2589, c2590, c2631).
4: Direct setpoint input/MDI and starting homing (c2647, c2595).
5: Direct setpoint input/MDI and activate traversing task (c2647, c2631).
6: Start homing and activate traversing task (c2595, c2631).
Remedy: Check the appropriate input signals and correct.

F07458 EPOS: Reference cam not found

Message class: Application/technological function faulted (17)
Message value: -

Component: None
Response: OFF1
Acknowledgment: IMMEDIATELY
Cause: After the active homing starts, the axis moved through the maximum permissible distance to search for the reference cam without actually finding the reference cam.
Remedy: - Check signal "Reference cam" (c2612).
- Check the maximum permissible distance to the reference cam (p2606).
- If axis does not have any reference cam, then set p2607 to 0.
See also: p2606 (EPOS active homing reference cam maximum distance), p2607 (EPOS active homing reference cam available), c2612 (EPOS active homing reference cam)

F07459 EPOS: No zero mark

Message class: Application/technological function faulted (17)
Message value: -
Component: None
Response: OFF1
Acknowledgment: IMMEDIATELY
Cause: After leaving the reference cam, the axis has traversed the maximum permissible distance between the reference cam and zero mark without finding the zero mark.
Remedy: - Check the encoder regarding the zero mark.
- Check the maximum permissible distance between the reference cam and zero mark (p2609).
- Use an external encoder zero mark (equivalent zero mark) (p0494).
See also: p2609 (EPOS active homing max distance reference cam and zero mark)

F07460 EPOS: End of reference cam not found

Message class: Application/technological function faulted (17)
Message value: -
Component: None
Response: OFF1
Acknowledgment: IMMEDIATELY
Cause: In the "active homing" mode, when approaching the zero mark, the axis reached the end of the traversing range without detecting an edge at binary signal "Reference cam" (c2612).
Maximum traversing range: -2147483648 [LU] ... -2147483647 [LU]
Remedy: - Check signal "reference cam" (c2612).
- Repeat active homing.
See also: c2612 (EPOS active homing reference cam)

A07461 EPOS: Home position not set

Message class: Application/technological function faulted (17)
Message value: -
Component: None
Response: NONE
Acknowledgment: NONE
Cause: When starting a traversing block/direct setpoint input, a home position is not set (r2684.11 = 0).
Remedy: Carry out homing (active homing, passive homing, set home position).

A07462 EPOS: Selected traversing block number does not exist

Message class: Error in the parameterization / configuration / commissioning procedure (18)
Message value: %1
Component: None

Response: NONE
Acknowledgment: NONE
Cause: A traversing block selected via binector input c2625 ... c2629 was started via binary signal c2631 = 0/1 edge "Activate traversing task".
- The number of the started traversing block is not contained in p2616[0...n].
- The started traversing block is suppressed.
Alarm value (r2124, interpret decimal):
Number of the selected traversing block that is also not available.
Remedy: - Correct the traversing program.
- Select an available traversing block number.

A07463 (F) EPOS: External block change not requested in the traversing block

Message class: Application/technological function faulted (17)
Message value: %1
Component: None
Response: NONE
Acknowledgment: NONE
Cause: For a traversing block with the block change enable CONTINUE_EXTERNAL_ALARM, the external block change was not requested.
Alarm value (r2124, interpret decimal):
Number of the traversing block.
Remedy: Resolve the reason why the signal edge at the measuring probe is missing.
Response upon: F: OFF1
Acknowl. upon F: IMMEDIATELY

F07464 EPOS: Traversing block is inconsistent

Message class: Error in the parameterization / configuration / commissioning procedure (18)
Message value: %1
Component: None
Response: OFF1
Acknowledgment: IMMEDIATELY
Cause: The traversing block does not contain valid information.
Fault value (r0949, interpret decimal):
Number of the traversing block with invalid information.
Remedy: Check the traversing block and where relevant, take into consideration alarms that are present.

A07465 EPOS: Traversing block does not have a subsequent block

Message class: Error in the parameterization / configuration / commissioning procedure (18)
Message value: %1
Component: None
Response: NONE
Acknowledgment: NONE
Cause: There is no subsequent block in the traversing block.
Alarm value (r2124, interpret decimal):
Number of the traversing block with the missing subsequent block.
Remedy: - Parameterize this traversing block with the block change enable END.
- Parameterize additional traversing blocks with a higher block number and for the last block, using the block change enable END.

A07466 EPOS: Traversing block number assigned a multiple number of times

Message class: Error in the parameterization / configuration / commissioning procedure (18)
Message value: %1
Component: None
Response: NONE
Acknowledgment: NONE
Cause: The same traversing block number was assigned a multiple number of times.
Alarm value (r2124, interpret decimal):
Number of the traversing block that was assigned a multiple number of times.
Remedy: Correct the traversing blocks.

A07467 EPOS: Traversing block has illegal task parameters

Message class: Error in the parameterization / configuration / commissioning procedure (18)
Message value: %1
Component: None
Response: NONE
Acknowledgment: NONE
Cause: The task parameter in the traversing block contains an illegal value.
Alarm value (r2124, interpret decimal):
Number of the traversing block with an illegal task parameter.
Remedy: Correct the task parameter in the traversing block.

A07468 EPOS: Traversing block jump destination does not exist

Message class: Error in the parameterization / configuration / commissioning procedure (18)
Message value: %1
Component: None
Response: NONE
Acknowledgment: NONE
Cause: In a traversing block, a jump was programmed to a non-existent block.
Alarm value (r2124, interpret decimal):
Number of the traversing block with a jump destination that does not exist.
Remedy: - Correct the traversing block.
- Add the missing traversing block.

A07469 EPOS: Traversing block target position < negative software limit switch

Message class: Error in the parameterization / configuration / commissioning procedure (18)
Message value: %1
Component: None
Response: NONE
Acknowledgment: NONE
Cause: In the traversing block the specified absolute target position lies outside the range limited by the negative software limit switch.
Alarm value (r2124, interpret decimal):
Number of the traversing block with illegal target position.
Remedy: - Correct the traversing block.
- Change the negative software limit switch (c2578, p2580).

A07470 EPOS: Traversing block target position > positive software limit switch

Message class: Error in the parameterization / configuration / commissioning procedure (18)

Message value: %1
Component: None
Response: NONE
Acknowledgment: NONE
Cause: In the traversing block the specified absolute target position lies outside the range limited by the positive software limit switch.
Alarm value (r2124, interpret decimal):
Number of the traversing block with illegal target position.
Remedy: - Correct the traversing block.
- Change the positive software limit switch (c2579, p2581).

A07471 EPOS: Traversing block target position outside the modulo range

Message class: Application/technological function faulted (17)
Message value: %1
Component: None
Response: NONE
Acknowledgment: NONE
Cause: In the traversing block the target position lies outside the modulo range.
Alarm value (r2124, interpret decimal):
Number of the traversing block with illegal target position.
Remedy: - In the traversing block, correct the target position.
- Change the modulo range (p2576).

A07472 EPOS: Traversing block ABS_POS/ABS_NEG not possible

Message class: Application/technological function faulted (17)
Message value: %1
Component: None
Response: NONE
Acknowledgment: NONE
Cause: In the traversing block the positioning mode ABS_POS or ABS_NEG were parameterized with the modulo correction not activated.
Alarm value (r2124, interpret decimal):
Number of the traversing block with the illegal positioning mode.
Remedy: Correct the traversing block.

A07473 (F) EPOS: Beginning of traversing range reached

Message class: Application/technological function faulted (17)
Message value: -
Component: None
Response: NONE
Acknowledgment: NONE
Cause: When traversing, the axis has moved to the traversing range limit.
Remedy: Move away in the positive direction.
Response upon: F: OFF1
Acknowl. upon F: IMMEDIATELY

A07474 (F) EPOS: End of traversing range reached

Message class: Application/technological function faulted (17)
Message value: -

Component: None
Response: NONE
Acknowledgment: NONE
Cause: When traversing, the axis has moved to the traversing range limit.
Remedy: Move away in the negative direction.
Response upon: F: OFF1
Acknowl. upon F: IMMEDIATELY

F07475 (A) EPOS: Target position < start of traversing range

Message class: Error in the parameterization / configuration / commissioning procedure (18)
Message value: -
Component: None
Response: OFF1
Acknowledgment: IMMEDIATELY
Cause: The target position for relative traversing lies outside the traversing range.
Remedy: Correct the target position.
Response upon: A: NONE
Acknowl. upon A: NONE

F07476 (A) EPOS: Target position > end of the traversing range

Message class: Error in the parameterization / configuration / commissioning procedure (18)
Message value: -
Component: None
Response: OFF1
Acknowledgment: IMMEDIATELY
Cause: The target position for relative traversing lies outside the traversing range.
Remedy: Correct the target position.
Response upon: A: NONE
Acknowl. upon A: NONE

A07477 (F) EPOS: Target position < negative software limit switch

Message class: Error in the parameterization / configuration / commissioning procedure (18)
Message value: -
Component: None
Response: NONE
Acknowledgment: NONE
Cause: In the actual traversing operation, the target position is less than the negative software limit switch.
Remedy: - Correct the target position.
- Change the negative software limit switch (c2578, p2580).
See also: c2578 (EPOS negative software limit switch), p2580 (EPOS negative software limit switch), c2582 (EPOS software limit switch activation)
Response upon: F: OFF1
Acknowl. upon F: IMMEDIATELY

A07478 (F) EPOS: Target position > positive software limit switch

Message class: Error in the parameterization / configuration / commissioning procedure (18)
Message value: -
Component: None
Response: NONE

Acknowledgment: NONE

Cause: In the actual traversing operation, the target position is greater than the positive software limit switch.

Remedy: - Correct the target position.
- Change the positive software limit switch (c2579, p2581).
See also: c2579 (EPOS positive software limit switch), p2581 (EPOS positive software limit switch), c2582 (EPOS software limit switch activation)

Response upon: F: OFF1

Acknowl. upon F: IMMEDIATELY

A07479 EPOS: Negative software limit switch reached

Message class: Application/technological function faulted (17)

Message value: -

Component: None

Response: NONE

Acknowledgment: NONE

Cause: The axis is at the position of the negative software limit switch. An active traversing block was interrupted.

Remedy: - Correct the target position.
- Change the negative software limit switch (c2578, p2580).
See also: c2578 (EPOS negative software limit switch), p2580 (EPOS negative software limit switch), c2582 (EPOS software limit switch activation)

A07480 EPOS: Positive software limit switch reached

Message class: Application/technological function faulted (17)

Message value: -

Component: None

Response: NONE

Acknowledgment: NONE

Cause: The axis is at the position of the positive software limit switch. An active traversing block was interrupted.

Remedy: - Correct the target position.
- Change the positive software limit switch (c2579, p2581).
See also: c2579 (EPOS positive software limit switch), p2581 (EPOS positive software limit switch), c2582 (EPOS software limit switch activation)

F07481 (A) EPOS: Axis position < negative software limit switch

Message class: Application/technological function faulted (17)

Message value: -

Component: None

Response: OFF1

Acknowledgment: IMMEDIATELY

Cause: The actual position of the axis is less than the position of the negative software limit switch.

Remedy: - Correct the target position.
- Change the negative software limit switch (c2578, p2580).
See also: c2578 (EPOS negative software limit switch), p2580 (EPOS negative software limit switch), c2582 (EPOS software limit switch activation)

Response upon: A: NONE

Acknowl. upon A: NONE

F07482 (A) EPOS: Axis position > positive software limit switch

Message class: Application/technological function faulted (17)

Message value: -

Component: None
Response: OFF1
Acknowledgment: IMMEDIATELY
Cause: The actual position of the axis is greater than the position of the positive software limit switch.
Remedy: - Correct the target position.
- Change the positive software limit switch (c2579, p2581).
See also: c2579 (EPOS positive software limit switch), p2581 (EPOS positive software limit switch), c2582 (EPOS software limit switch activation)
Response upon: A: NONE
Acknowl. upon A: NONE

A07483 EPOS: Travel to fixed stop clamping torque not reached

Message class: Application/technological function faulted (17)
Message value: -
Component: None
Response: NONE
Acknowledgment: NONE
Cause: The fixed stop in the traversing block was reached without the clamping torque/clamping force having been achieved.
Remedy: - Check the torque limits (p1520, p1521).

F07484 EPOS: Fixed stop outside the monitoring window

Message class: Application/technological function faulted (17)
Message value: -
Component: None
Response: OFF3
Acknowledgment: IMMEDIATELY
Cause: In the "fixed stop reached" state, the axis has moved outside the defined monitoring window (p2635).
Remedy: - Check the monitoring window (p2635).
- Check the mechanical system.

F07485 (A) EPOS: Fixed stop not reached

Message class: Application/technological function faulted (17)
Message value: -
Component: None
Response: OFF1
Acknowledgment: IMMEDIATELY
Cause: In a traversing block with the task FIXED STOP, the end position was reached without detecting a fixed stop.
Remedy: - Check the traversing block and locate the target position further into the workpiece.
- If required, reduce the maximum following error window to detect the fixed stop (p2634).
Response upon: A: NONE
Acknowl. upon A: NONE

A07486 EPOS: Intermediate stop missing

Message class: Application/technological function faulted (17)
Message value: -
Component: None
Response: NONE
Acknowledgment: NONE

Cause: In operating mode "traversing blocks" or "direct setpoint input/MDI", at the start of motion, c2640 is set to an intermediate stop, i.e. to a 0 signal.

Remedy: Set c2640 to "No intermediate stop" (1 signal) and restart motion.
See also: c2640 (EPOS intermediate stop (0 signal))

A07487 EPOS: Reject traversing task missing

Message class: Application/technological function faulted (17)

Message value: -

Component: None

Response: NONE

Acknowledgment: NONE

Cause: In the modes "Traversing blocks" or "Direct setpoint input/MDI" at the start of motion, the binary signal sink "Do not reject traversing task/reject traversing task" (c2641) does not have a 1 signal.

Remedy: Connect a 1 signal to the binary signal sink "Do not reject traversing task/reject traversing task" (c2641) and restart motion.
See also: c2641 (EPOS reject traversing task (0 signal))

F07488 EPOS: Relative positioning not possible

Message class: Application/technological function faulted (17)

Message value: -

Component: None

Response: OFF1

Acknowledgment: IMMEDIATELY

Cause: In the mode "direct setpoint input/MDI", for continuous transfer (c2649 = 1) relative positioning was selected (c2648 = 0 signal).

Remedy: Check the control.

A07489 EPOS: Home position correction outside the window

Message class: Application/technological function faulted (17)

Message value: -

Component: None

Response: NONE

Acknowledgment: NONE

Cause: For the function "passive homing" the difference between the measured position at the measuring probe and the home position lies outside the parameterized window.

Remedy: - Check the mechanical system.

F07490 (N) EPOS: Enable signal withdrawn while traversing

Message class: Application/technological function faulted (17)

Message value: -

Component: None

Response: OFF1

Acknowledgment: IMMEDIATELY

Cause: - For a standard assignment, another fault may have occurred as a result of withdrawing the enable signals.
- The drive is in the "switching on inhibited" state (for a standard assignment).

Remedy: - Set the enable signals or check the cause of the fault that first occurred and then result (for a standard assignment).
- Check the assignment to enable the basic positioning function.

Response upon: N: NONE

Acknowl. upon N: NONE

F07491 (A) EPOS: Negative hardware limit switch reached

Message class: Application/technological function faulted (17)

Message value: -

Component: None

Response: OFF3

Acknowledgment: IMMEDIATELY

Cause: A 0 signal was detected at c2569, i.e. the negative hardware limit switch was reached.

For a positive traversing direction, the negative hardware limit switch was reached - i.e. the hardware limit switch wiring is incorrect.

See also: c2569 (EPOS negative hardware limit switch)

Remedy: - Leave the negative hardware limit switch in the positive traversing direction and return the axis to the valid traversing range.

- Check the wiring of the hardware limit switch.

Response upon: A: NONE

Acknowl. upon A: NONE

F07492 (A) EPOS: Positive hardware limit switch reached

Message class: Application/technological function faulted (17)

Message value: -

Component: None

Response: OFF3

Acknowledgment: IMMEDIATELY

Cause: A 0 signal was detected at c2570, i.e. the positive hardware limit switch was reached.

For a negative traversing direction, the positive hardware limit switch was reached - i.e. the hardware limit switch wiring is incorrect.

See also: c2570 (EPOS positive hardware limit switch)

Remedy: - Leave the positive hardware limit switch in the negative traversing direction and return the axis to the valid traversing range.

- Check the wiring of the hardware limit switch.

Response upon: A: NONE

Acknowl. upon A: NONE

F07493 LR: Overflow of the value range for position actual value

Message class: Application/technological function faulted (17)

Message value: %1

Component: None

Response: OFF1

Acknowledgment: IMMEDIATELY

Cause: The value range (-2147483648 ... 2147483647) for the position actual value representation was exceeded.

When the overflow occurs, the "homed" or "adjustment absolute measuring system" status is reset.

Fault value (r0949, interpret decimal):

1: The position actual value (r2521) has exceeded the value range.

2: The encoder position actual value Gn_XIST2 has exceeded the value range.

3: The maximum encoder value times the factor to convert the absolute position Gn_XIST2 from increments to length units (LU) has exceeded the value range for displaying the position actual value.

Remedy: If required, reduce the traversing range or position resolution (p2506).
Note for fault value = 3:
If the value for the maximum possible absolute position (LU) is greater than 4294967296, then it is not possible to make an adjustment due to an overflow.
For rotary encoders, the maximum possible absolute position (LU) is calculated as follows:
p2506 * p2505 / p2504
p2506 * p2505 * p0421 / p2504 for multiturn encoders

A07495 (F, N) LR: Homing function interrupted

Message class: Application/technological function faulted (17)
Message value: -
Component: None
Response: NONE
Acknowledgment: NONE
Cause: An activated homing function (homing mark search or measuring probe evaluation) was canceled.
Possible causes:
- An encoder fault has occurred (Gn_ZSW.15 = 1).
- Position actual value was set during an activated homing function.
- Homing mark search and measuring probe evaluation simultaneously activated.
- Activated homing function (homing mark search or measuring probe evaluation) was deactivated.

Remedy:
- Check the causes and resolve.
- Reset the control and activate the required function.
- Set the input terminal for the measuring probe.

Response upon: F: OFF1
Acknowl. upon F: IMMEDIATELY
Response upon: N: NONE
Acknowl. upon N: NONE

A07496 EPOS: Enable not possible

Message class: Application/technological function faulted (17)
Message value: %1
Component: None
Response: NONE
Acknowledgment: NONE
Cause: It is not possible to enable the basic positioner because at least one condition is missing.
Alarm value (r2124, interpret decimal):
1: EPOS enable missing.
2: Position actual value, valid feedback signal missing.
Remedy: Check the corresponding missing condition.

A07498 (F) LR: Measuring probe evaluation not possible

Message class: Application/technological function faulted (17)
Message value: %1
Component: None
Response: NONE
Acknowledgment: NONE

Cause: When evaluating the measuring probe, an error occurred.
Alarm value (r2124, interpret decimal):
6:
The input terminal for the measuring probe is not set.
4098:
Error when initializing the measuring probe.
4100:
The measuring pulse frequency is too high.
> 50000:
The measuring clock cycle is not a multiple integer of the position controller clock cycle.

Remedy: Deactivate measuring probe evaluation.
For alarm value = 6:
Set the input terminal for the measuring probe (p0488, p0489).
For alarm value = 4098:
Check the converter hardware.
For alarm value = 4100:
Reduce the frequency of the measuring pulses at the measuring probe.
For alarm value > 50000:
Set the clock cycle ratio of the measuring clock cycle to the position controller clock cycle to an integer multiple.
To do this, the currently effective measuring clock cycle can be determined from the alarm value as follows:
Tmeas [125 µs] = alarm value - 50000

Response upon: F: OFF1

Acknowl. upon F: IMMEDIATELY

F07499 (A) EPOS: Reversing cam approached with the incorrect traversing direction

Message class: Application/technological function faulted (17)

Message value: -

Component: None

Response: OFF3

Acknowledgment: IMMEDIATELY

Cause: The negative reversing cam was approached in the positive traversing direction, or the positive reversing cam was approached in the negative traversing direction.
See also: c2613 (EPOS active homing negative reversing cam), c2614 (EPOS active homing positive reversing cam)

Remedy: - Check the wiring of the reversing cam (c2613, c2614).
- Check the traversing direction to approach the reversing cam.

Response upon: A: NONE

Acknowl. upon A: NONE

F07503 EPOS: Hardware limit switch approached with the incorrect traversing direction

Message class: Application/technological function faulted (17)

Message value: %1

Component: None

Response: NONE

Acknowledgment: IMMEDIATELY

Cause: The negative hardware limit switch was approached in the positive traversing direction, or the positive hardware limit switch was approached in the negative traversing direction.

Remedy: - Check the wiring of the hardware limit switch (c2569, c2570).
- Check the traversing direction when approaching the hardware limit switch.

A07507 EPOS: Home position cannot be set

Message class: Application/technological function faulted (17)
Message value: -
Component: Motor
Response: NONE
Acknowledgment: NONE
Cause: After the home position correction, the position setpoint lies outside the traversing range limits.
Remedy: - Optimize the position controller.
- Due to a possible position controller deviation, home position p2599 should not be directly placed at the traversing range limits.

A07550 (F, N) Drive: Not possible to reset encoder parameters

Message class: Hardware/software error (1)
Message value: %1
Component: None
Response: NONE
Acknowledgment: NONE
Cause: When restoring a factory setting, it was not possible to reset the encoder parameters. The encoder parameters are directly read out of the encoder.
Alarm value (r2124, interpret decimal):
Component number of the encoder involved.
Remedy: - Repeat the operation.
- Check the encoder connection.
Response upon: F: NONE
Acknowl. upon F: IMMEDIATELY
Response upon: N: NONE
Acknowl. upon N: NONE

F07555 (A) Drive encoder: Configuration position tracking

Message class: Error in the parameterization / configuration / commissioning procedure (18)
Message value: Component number: %1, encoder data set: %2, drive data set: %3, fault cause: %4
Component: Encoder 1
Response: OFF2
Acknowledgment: IMMEDIATELY

Cause: For position tracking, the configuration is not supported.
Position tracking can only be activated for absolute encoders.
For linear axes, it is not possible to simultaneously activate the position tracking for load and measuring gears.
Fault value (r0949, interpret hexadecimal):
ddccbbaa hex
aa = encoder data set
bb = component number
cc = drive data set
dd = fault cause
dd = 00 hex = 0 dec
An absolute encoder is not being used.
dd = 01 hex = 1 dec
Position tracking cannot be activated because the memory of the internal NVRAM is not sufficient or a Control Unit does not have an NVRAM.
dd = 02 hex = 2 dec
For a linear axis, the position tracking was activated for the load and measuring gearbox.
dd = 03 hex = 3 dec
Position tracking cannot be activated because position tracking with another gear ratio, axis type or tolerance window has already been detected for this encoder data set.
dd = 04 hex = 4 dec
A linear encoder is being used.
See also: p0404 (Encoder configuration effective)

Remedy: For fault value 0:
- Use an absolute encoder.
For fault value 1:
- Use a Control Unit with sufficient NVRAM.
For fault value = 2, 4:
- If necessary, deselect the position tracking (p2720 for the load gearbox).
For fault value 3:
- Only activate position tracking of the load gearbox in the same encoder data set if the gear ratio (p2504, p2505), axis type (p2720.1) and tolerance window (p2722) are also the same. These parameters must be the same in all drive data sets, which use the same motor encoder.

Response upon: A: NONE

Acknowl. upon A: NONE

A07557 (F) Motor encoder: Home position not in the permissible range

Message class: Application/technological function faulted (17)

Message value: %1

Component: None

Response: NONE

Acknowledgment: NONE

Cause: The home position received via p2599 when adjusting the encoder lies outside half of the encoder range and cannot be set as actual axis position.
The maximum permissible value is displayed in the supplementary information.

Remedy: Set the home position less than the value from the supplementary information.
See also: c2598 (EPOS home position signal)

Response upon: F: OFF1

Acknowl. upon F: IMMEDIATELY

A07565 (F, N) Drive: Encoder error in PROFIdrive encoder interface 1

Message class: Position/speed actual value incorrect or not available (11)

Message value: %1
Component: Sensor Module Encoder 1
Response: NONE
Acknowledgment: NONE
Cause: An encoder error was signaled for encoder 1 via the PROFIdrive encoder interface (G1_ZSW.15).
Alarm value (r2124, interpret decimal):
Error code from G1_XIST2.
Remedy: Acknowledge the encoder error using the encoder control word (G1_STW.15 = 1).
Response upon: F: NONE
Acknowl. upon F: IMMEDIATELY
Response upon: N: NONE
Acknowl. upon N: NONE

A07569 (F) Enc identification active

Message class: Error in the parameterization / configuration / commissioning procedure (18)
Message value: -
Component: None
Response: NONE
Acknowledgment: NONE
Cause: During encoder identification (waiting) with p0400 = 10100, the encoder could still not be identified.
There is possibly an incorrect encoder or no encoder available, an incorrect encoder cable inserted or no encoder cable inserted.
Remedy: - Check the encoder cable and if necessary connect it.
- Enter the corresponding encoder type in p0400.
Response upon: F: NONE
Acknowl. upon F: IMMEDIATELY

F07575 Drive: Motor encoder not ready

Message class: Position/speed actual value incorrect or not available (11)
Message value: -
Component: Sensor Module Encoder 1
Response: OFF2
Acknowledgment: IMMEDIATELY
Cause: The motor encoder signals that it is not ready.
- Initialization of encoder 1 (motor encoder) was unsuccessful.
- The function "parking encoder" is active (encoder control word G1_STW.14 = 1).
- The Sensor Module is defective.
Remedy: Evaluate other active faults via the motor encoder.

A07577 (F) Motor encoder: Measuring probe evaluation not possible

Message class: Application/technological function faulted (17)
Message value: %1
Component: None
Response: NONE
Acknowledgment: NONE

Cause: When evaluating the measuring probe, an error occurred.
Alarm value (r2124, interpret decimal):
6: The input terminal for the measuring probe is not set.
4098: Error when initializing the probe.
4100: The measuring pulse frequency is too high.
4200: The bus cycle time is not a multiple integer of the position controller clock cycle.

Remedy: Deactivate measuring probe evaluation.
For alarm value = 6:
Set the input terminal for the measuring probe (p0488, p0489).
For alarm value = 4098:
Check the converter hardware.
For alarm value = 4100:
Reduce the frequency of the measuring pulses at the measuring probe.
For alarm value = 4200:
Set the clock cycle ratio between the bus cycle time and the position controller clock cycle to an integer multiple.

Response upon: F: OFF1

Acknowl. upon F: IMMEDIATELY

A07580 (F, N) Drive: No Sensor Module with matching component number

Message class: Error in the parameterization / configuration / commissioning procedure (18)

Message value: Encoder data set: %1

Component: None

Response: NONE

Acknowledgment: NONE

Cause: A Sensor Module with the specified component number was not found.
Alarm value (r2124, interpret decimal):
Encoder data set involved.

Remedy: Correct the component number of the Sensor Module.

Response upon: F: OFF1

Acknowl. upon F: IMMEDIATELY

Response upon: N: NONE

Acknowl. upon N: NONE

A07581 (F) Motor encoder: Position actual value preprocessing error

Message class: Position/speed actual value incorrect or not available (11)

Message value: -

Component: Encoder 1

Response: NONE

Acknowledgment: NONE

Cause: An error has occurred during the position actual value preprocessing.

Remedy: Check the encoder for the position actual value preprocessing.
See also: p2502 (LR encoder assignment)

Response upon: F: OFF1

Acknowl. upon F: IMMEDIATELY

A07587 Motor encoder: Position actual value preprocessing has no valid encoder

Message class: Error in the parameterization / configuration / commissioning procedure (18)

Message value: -

Component: Encoder 1

Response: NONE
Acknowledgment: NONE
Cause: The following problem has occurred during the position actual value preprocessing:
- An encoder data set has been assigned, however, the encoder data set does not contain any encoder data (p0400 = 0) or invalid data (e.g. p0408 = 0).

Remedy: Check the drive data sets, encoder data sets.
See also: p0400 (Encoder type selection), p2502 (LR encoder assignment)

A07593 (F, N) Motor encoder: Value range for position actual value exceeded

Message class: Application/technological function faulted (17)
Message value: %1
Component: None
Response: NONE
Acknowledgment: NONE
Cause: The value range (-2147483648 ... 2147483647) for the position actual value representation was exceeded.
When the overflow occurs, the "homed" or "absolute encoder adjusted" status is reset.
Alarm value (r2124, interpret decimal):
1: The position actual value (r2521) has exceeded the value range.
2: The encoder position actual value Gn_XIST2 has exceeded the value range.
3: The maximum encoder value multiplied by the factor to convert the absolute position Gn_XIST2 from increments to length units (LU) has exceeded the value range for displaying the position actual value.

Remedy: If required, reduce the traversing range or position resolution.
For alarm value = 3:
Reducing the position resolution and conversion factor:
- Reduce the length unit (LU) per load revolution for rotary encoders (p2506).

Response upon: F: OFF1
Acknowl. upon F: IMMEDIATELY
Response upon: N: NONE
Acknowl. upon N: NONE

A07596 (F, N) Motor encoder: Homing function interrupted

Message class: Application/technological function faulted (17)
Message value: -
Component: None
Response: NONE
Acknowledgment: NONE
Cause: An activated homing function (homing mark search or measuring probe evaluation) was canceled.
- An encoder fault has occurred (Gn_ZSW.15 = 1).
- Position actual value was set during an activated homing function.
- Homing mark search and measuring probe evaluation simultaneously activated.
- Activated homing function (homing mark search or measuring probe evaluation) was deactivated.

Remedy:
- Check the causes and resolve.
- Reset the control and activate the required function.

Response upon: F: OFF1
Acknowl. upon F: IMMEDIATELY
Response upon: N: NONE
Acknowl. upon N: NONE

F07801 Drive: Motor overcurrent

Message class: Motor overload (8)

Message value: -
Component: Motor
Response: OFF2
Acknowledgment: IMMEDIATELY
Cause: The permissible motor limit current was exceeded.
- Active current limit too low.
- Current controller not correctly set.
- Load is too high.
- Short-circuit in the motor cable or ground fault.
- Motor current does not match the drive current.

Remedy:
- Reduce the load.
- Check the motor and motor cables for short-circuit and ground fault.
- Check the drive and motor combination.

F07802 Drive: Infeed not ready

Message class: Infeed faulted (13)
Message value: -
Component: None
Response: OFF2
Acknowledgment: IMMEDIATELY
Cause: The drive does not signal a ready state after an internal switch-on command.
- DC link voltage not available or jumper not inserted at X1/X4.
- Supply voltage incorrectly set.
- Defective drive.

Remedy:
- Switch on the load supply.
- Check the line connection and supply voltage (p0210).
- Insert the jumper for the internal braking resistor.
- Connect an external braking resistor (X1/X4)
- Replace the drive.

F07810 Drive: Power unit EEPROM without rated data

Message class: Hardware/software error (1)
Message value: -
Component: Power Unit
Response: NONE
Acknowledgment: IMMEDIATELY
Cause: No rated data are stored in the power unit EEPROM.
Remedy: Replace the power unit or inform Siemens Customer Service.

F07815 Drive: Power unit has been changed

Message class: Error in the parameterization / configuration / commissioning procedure (18)
Message value: Parameter: %1
Component: Power Unit
Response: NONE
Acknowledgment: IMMEDIATELY
Cause: The code number of the actual power unit does not match the saved number. This occurs if a saved configuration (SD card, backup file) of a converter with another power rating is used.
Fault value only for internal Siemens diagnostics.
See also: p0201 (Power unit code number)

Remedy:
- Reset to the factory settings, which corresponds to recommissioning the converter.
- Use an SD card or backup file with the configuration correct for the drive being used and switch-off/switch-on the drive.
- In case of doubt, before using an SD card, delete the existing configuration of the USER folder.
- For a series commissioning, only use the same converter types (order number, power class).

F07860 (A) External fault 1

Message class: External measured value / signal state outside the permissible range (16)
Message value: -
Component: None
Response: OFF2
Acknowledgment: IMMEDIATELY
Cause: The condition for "External fault 1" is active.
Note:
"External fault 1" is initiated by a 1/0 edge via c2106.
See also: c2106 (External fault 1)
Remedy:
- Eliminate the causes of this fault.
- Acknowledge fault.

Response upon: A: NONE
Acknowl. upon A: NONE

F07900 (N, A) Drive: Motor blocked/speed controller at its limit

Message class: Application/technological function faulted (17)
Message value: -
Component: Motor
Response: OFF2
Acknowledgment: IMMEDIATELY
Cause: The motor operates longer than 0.2 seconds at the torque limit and below the speed threshold in p2175.
This signal can also be initiated if the speed actual value oscillates and the speed controller output repeatedly and briefly goes to its limit.
This message can also be output for a phase failure in the motor feeder cable.
See also: p2175, p2177
Remedy:
- Check that the motor can freely move.
- Check the effective torque limit (r1538, r1539).
- Check the parameter of the "Motor blocked" signal and possibly correct (p2175).
- Check the motor feeder cable.

Response upon: N: NONE
Acknowl. upon N: NONE
Response upon: A: NONE
Acknowl. upon A: NONE

F07901 Drive: Motor overspeed

Message class: Application/technological function faulted (17)
Message value: -
Component: Motor
Response: OFF2
Acknowledgment: IMMEDIATELY
Cause: The maximum permissible speed was either positively or negatively exceeded (p1082).

Remedy: - Check the speed controller (p1460, p1462).
- Check the moment of inertia (p1498).
- Check the maximum speed (p1082).

A07920 Drive: Torque/speed too low

Message class: Application/technological function faulted (17)
Message value: -
Component: Motor
Response: NONE
Acknowledgment: NONE
Cause: The torque deviates from the torque/speed envelope characteristic (too low).
Remedy: - Check the connection between the motor and load.
- Adapt the parameterization corresponding to the load.

A07921 Drive: Torque/speed too high

Message class: Application/technological function faulted (17)
Message value: -
Component: Motor
Response: NONE
Acknowledgment: NONE
Cause: The torque deviates from the torque/speed envelope characteristic (too high).
Remedy: - Check the connection between the motor and load.
- Adapt the parameterization corresponding to the load.

A07922 Drive: Torque/speed out of tolerance

Message class: Application/technological function faulted (17)
Message value: -
Component: Motor
Response: NONE
Acknowledgment: NONE
Cause: The torque deviates from the torque/speed envelope characteristic.
Remedy: - Check the connection between the motor and load.
- Adapt the parameterization corresponding to the load.

F07923 Drive: Torque/speed too low

Message class: Application/technological function faulted (17)
Message value: -
Component: Motor
Response: OFF1
Acknowledgment: IMMEDIATELY
Cause: The torque deviates from the torque/speed envelope characteristic (too low).
Remedy: - Check the connection between the motor and load.
- Adapt the parameterization corresponding to the load.

F07924 Drive: Torque/speed too high

Message class: Application/technological function faulted (17)
Message value: -
Component: Motor
Response: OFF1

Acknowledgment: IMMEDIATELY
Cause: The torque deviates from the torque/speed envelope characteristic (too high).
Remedy: - Check the connection between the motor and load.
- Adapt the parameterization corresponding to the load.

F07925 Drive: Torque/speed out of tolerance

Message class: Application/technological function faulted (17)
Message value: -
Component: Motor
Response: OFF1
Acknowledgment: IMMEDIATELY
Cause: The torque deviates from the torque/speed envelope characteristic.
Remedy: - Check the connection between the motor and load.
- Adapt the parameterization corresponding to the load.

F07955 Drive: Motor has been changed

Message class: Error in the parameterization / configuration / commissioning procedure (18)
Message value: Parameter: %1
Component: Motor
Response: NONE
Acknowledgment: IMMEDIATELY
Cause: The code numbers of the bearings, gearbox or brake do not match the saved numbers.
Fault value (r0949, interpret decimal):
Number of the incorrect parameter
See also: p0301, r0302
Remedy: Connect the original motor and switch on the converter again (POWER ON) - or restore the factory settings.
Note:
The data for bearings, gearbox and brake are reloaded.

F07956 (A) Drive: Motor code does not match the list (catalog) motor

Message class: Error in the parameterization / configuration / commissioning procedure (18)
Message value: %1
Component: Motor
Response: NONE
Acknowledgment: IMMEDIATELY
Cause: The motor code of the connected motor does not match the possible list motor types (see selection in p0300).
It is possible that this firmware version does not support the connected motor.
Fault value (r0949, interpret decimal):
Motor code of the connected motor.
Note:
The first three digits of the motor code generally correspond to the list motor type.
Remedy: Use a motor with matching motor code.
Response upon: A: NONE
Acknowl. upon A: NONE

F07990 Drive: Incorrect motor data identification

Message class: Error in the parameterization / configuration / commissioning procedure (18)
Message value: %1
Component: Motor

Response: OFF2

Acknowledgment: IMMEDIATELY

Cause: A fault has occurred during the identification routine.
Fault value (r0949, interpret decimal):
151: The determined force due to weight is higher than the rated motor torque (r0333).
152: The torque precontrol channel (c1511) is already interconnected.
190: Speed setpoint not equal to zero.

Remedy: For fault value = 151:
- The motor cannot continuously hold the force due to weight. Either reduce the force due to weight or use a motor with a higher rated torque.
For fault value = 152:
- Add the measured force due to weight (p1532) to the signal source of c1511.
- If required withdraw the signal interconnection from c1511 (c1511 = 0) and repeat the measurement.
For fault value = 190:
- Set speed setpoint to zero.

A08560 IE: Syntax error in configuration file

Message class: Error in the parameterization / configuration / commissioning procedure (18)

Message value: -

Component: None

Response: NONE

Acknowledgment: NONE

Cause: A syntax error has been detected in the configuration file for the Industrial Ethernet interface (X127). The saved configuration file has not been loaded.
Note:
IE: Industrial Ethernet

Remedy: Reinitialize the station using the "Edit Ethernet node" screen form (e.g. with Startdrive commissioning tool).

A08561 IE: Consistency error affecting adjustable parameters

Message class: Error in the parameterization / configuration / commissioning procedure (18)

Message value: %1

Component: None

Response: NONE

Acknowledgment: NONE

Cause: A consistency error was detected when activating the configuration for the Industrial Ethernet interface (X127).
Alarm value (r2124, interpret decimal):
0: General consistency error
1: Error in the IP configuration (IP address, subnet mask or standard gateway).
2: Error in the station names.
5: Standard gateway is also set at the PROFINET interface.
6: The station name is also set at the PROFINET interface.
7: The IP address is located in the same subnet as the IP address of the PROFINET interface.
Note:
For alarm value = 0, 1, 2, 5, 7 the following applies: the configuration was not changed.
For alarm value = 6 the following applies: The new configuration was however activated.
IE: Industrial Ethernet

Remedy: Reinitialize the station using the "Edit Ethernet node" screen form (e.g. with Startdrive commissioning tool).

F13000 License not adequate

Message class: Error in the parameterization / configuration / commissioning procedure (18)

Message value: %1

Component: Control Unit (CU)

Response: OFF2

Acknowledgment: IMMEDIATELY

Cause:
- The converter uses options that require a license and the licenses are not sufficient.
- An error has occurred when checking the licensing.

Fault value (r0949, interpret decimal):

0: Adequate licensing was not able to be determined as there is no licensing data available on the memory card.

1: Adequate licensing was not able to be determined as the memory card with the required licensing data was withdrawn in operation or the memory card is defective.

2: Adequate licensing was not able to be determined as there is no licensing data available on the memory card.

3: Adequate licensing was not able to be determined as the licensing data does not match the serial number of the memory card being used.

4, 5, 6, 7: Adequate licensing was not able to be determined as the licensing data were manipulated and are therefore invalid.

8, 9: An internal error occurred when checking the license.

Remedy:

For fault value = 0:

Transfer a license file with the required licenses to the converter.

For fault value = 1:

Reinsert the memory card into the converter. If you have to replace a defective memory card, contact Technical Support.

For fault value = 2:

Transfer a license file with the required licenses to the converter.

For fault value = 3:

Compare the license file name (after "LK_" to ".ZIP") with the serial number of the memory card.

Transfer the appropriate license file to the converter.

For fault value = 4, 5, 6, 7, 8, 9:

- Carry out a POWER ON.
- Upgrade firmware to later version.
- Contact Technical Support.

Note:

An overview of the converter functions requiring a license can be displayed using a commissioning tool in the online mode. Depending on the commissioning tool, you can also obtain the necessary licensing (serial number, license file, Trial License Mode).

A13002 Licensing not sufficient in operation

Message class: Error in the parameterization / configuration / commissioning procedure (18)

Message value: -

Component: Control Unit (CU)

Response: NONE

Acknowledgment: NONE

Cause:
- For the converter, the options that require a license are being used but the licenses are not sufficient.
- An error occurred when checking the existing licenses.

Alarm value (r2124, interpret decimal):

0: The existing license is not sufficient.

1: An adequate license was not able to be determined as the memory card with the required licensing data was withdrawn in operation or the memory card has developed a defect.

2: An adequate license was not able to be determined as there is no licensing data available on the memory card.

3: An adequate license was not able to be determined as there is no licensing data available on the memory card.

4, 5, 6, 7: An adequate license was not able to be determined as the licensing data were manipulated and are therefore invalid.

8,9: An internal error occurred when checking the license.

Remedy:
For alarm value = 0:
Additional licenses are required and must be activated.
For alarm value = 1:
Reinsert or replace the memory card that matches the system.
For alarm value = 2:
Transfer the license file to the converter.
For alarm value = 3:
Compare the license file name (after "LK_" to ".ZIP") with the serial number of the memory card.
Transfer the appropriate license file to the converter.
For alarm value = 4, 5, 6, 7, 8, 9:
- Carry out a POWER ON.
- Upgrade firmware to later version.
- Contact Technical Support.
Note:
An overview of the converter functions requiring a license can be displayed using a commissioning tool in the online mode. Depending on the commissioning tool, you can also obtain the necessary licensing (serial number, license file, Trial License Mode).

A13030 Trial License activated

Message class: Error in the parameterization / configuration / commissioning procedure (18)
Message value: -
Component: Control Unit (CU)
Response: NONE
Acknowledgment: NONE
Cause: The "Trial License" function was activated. One of the available periods is expiring.
Remedy: Not necessary.
The alarm is automatically withdrawn after the periods have expired.

A13031 Trial License period expired

Message class: Error in the parameterization / configuration / commissioning procedure (18)
Message value: -
Component: Control Unit (CU)
Response: NONE
Acknowledgment: NONE
Cause: One of the available periods of the "Trial License" function has expired.
Remedy:
- If required, start an additional period.
- Deactivate functions requiring a license.
- Appropriately license the converter.
Note:
A license that is not adequate will only become evident after the next time the system runs up.

A13032 Trial License last period activated

Message class: Error in the parameterization / configuration / commissioning procedure (18)
Message value: -
Component: Control Unit (CU)
Response: NONE
Acknowledgment: NONE
Cause: The "Trial License" function was activated. The last of the available periods is expiring.
Remedy: Not necessary.
The alarm is automatically withdrawn after the last period has expired.

A13033 Trial License last period expired

Message class: Error in the parameterization / configuration / commissioning procedure (18)
Message value: -
Component: Control Unit (CU)
Response: NONE
Acknowledgment: NONE
Cause: The last period of the "Trial License" function has expired. No additional periods available.
Remedy:
- Deactivate functions requiring a license.
- Appropriately license the converter.

Note:
A license that is not adequate will only become evident after the next time the system runs up.

F30001 Drive: Overcurrent

Message class: Power electronics faulted (5)
Message value: Fault cause: %1 bin
Component: Power Unit
Response: OFF2
Acknowledgment: IMMEDIATELY
Cause: The drive has detected an overcurrent condition.
- Closed-loop control is incorrectly parameterized.
- Motor has a short-circuit or fault to ground (frame).
- The rated motor current is significantly higher than that of the drive.
- Infeed: High discharge and post-charging currents for line voltage dip.
- Infeed: High post-charging currents for overload when motoring and DC link voltage dip.
- Infeed: Short-circuit currents at switch-on as there is no line reactor.
- Power cables are not correctly connected.
- The power cables exceed the maximum permissible length.
- Defective drive.
- Line phase interrupted.

Fault value (r0949, interpret bitwise):
Bit 0: Phase U.
Bit 1: Phase V.
Bit 2: Phase W.

Remedy:
- Check the motor data, carry out commissioning if required.
- Check the assignment of the rated currents of the motor and converter.
- Infeed: Check the line quality.
- Infeed: Reduce the motor load.
- Infeed: Check that the line filter and line reactor are correctly connected.
- Check the power cable connections.
- Check the power cables for short-circuit or ground fault.
- Check the length of the power cables.
- Replace drive.
- Check the line phases.

F30002 Drive: DC link overvoltage

Message class: DC link overvoltage (4)
Message value: %1
Component: Power Unit
Response: OFF2
Acknowledgment: IMMEDIATELY

Cause: The drive has detected an overvoltage condition in the DC link.
- Motor regenerates too much energy.
- Device supply voltage too high.
- Line phase interrupted.
- Ground fault
- Short-circuit

Fault value only for internal Siemens diagnostics.

Remedy:
- Increase the ramp-down time.
- Use a braking resistor.
- Use a drive with a higher power rating.
- Check the device supply voltage (p0210).
- Check the line phases.
- Check for a ground fault and short-circuit.

See also: p0210 (Device supply voltage)

F30003 Power unit: DC link voltage undervoltage

Message class: Infeed faulted (13)

Message value: -

Component: Power Unit

Response: OFF2

Acknowledgment: IMMEDIATELY

Cause: The power unit has detected an undervoltage condition in the DC link.
- Line supply failure.
- Line voltage below the permissible value.
- Line infeed failed or interrupted.
- Line phase interrupted.

Note:
The monitoring threshold for undervoltage in the DC link is indicated in r0296.

Remedy:
- Check the line voltage.
- Check the line infeed and observe the fault messages relating to it (if there are any).
- Check the line phases.
- Check the supply voltage setting (p0210).

See also: p0210 (Device supply voltage)

F30004 Power unit: Overtemperature heat sink inverter

Message class: Power electronics faulted (5)

Message value: %1

Component: Power Unit

Response: OFF2

Acknowledgment: IMMEDIATELY

Cause: The temperature of the power unit heat sink has exceeded the permissible limit value.
- Insufficient cooling, fan failure.
- Overload.
- Ambient temperature too high.
- Pulse frequency too high.

Fault value (r0949, interpret decimal):
Temperature [0.01 °C].

Remedy:
- Check whether the fan is running.
- Check the fan elements.
- Check whether the ambient temperature is in the permissible range.
- Check the motor load.
- Reduce the pulse frequency if this is higher than the rated pulse frequency.

Notice:
This fault can only be acknowledged after the alarm threshold for alarm A30250 has been fallen below.

F30005 Power unit: Overload I2t (AC)

Message class: Power electronics faulted (5)

Message value: %1

Component: Power Unit

Response: OFF2

Acknowledgment: IMMEDIATELY

Cause: The fault threshold for the I2t overload on the AC side of the power unit has been exceeded. The permissible duty cycle or the continuous load was not maintained.
Fault value (r0949, interpret decimal):
I2t (AC) [100 % = 16384]
See also: r0036 (Power unit overload)

Remedy:
- Reduce the continuous load.
- Adapt the duty cycle.
- Check the rated currents of the motor and power unit.

See also: p0307 (Rated motor power)

F30011 Power unit: Line phase failure in main circuit

Message class: Line supply fault (2)

Message value: %1

Component: Power Unit

Response: OFF2

Acknowledgment: IMMEDIATELY

Cause: At the power unit, the DC link voltage ripple has exceeded the permissible limit value.
Possible causes:
- A line phase has failed.
- The 3 line phases are inadmissibly asymmetrical.
- The capacitance of the DC link capacitor forms a resonance frequency with the line inductance and the reactor integrated in the power unit.
- The fuse of a phase of a main circuit has ruptured.
- A motor phase has failed.
- For power units operated on a single phase, the permissible active power was exceeded.

Only for internal Siemens troubleshooting.

Remedy:
- Check the main circuit fuses.
- Check whether a single-phase load is distorting the line voltages.
- Detune the resonant frequency with the line inductance by using an upstream line reactor.
- Dampen the resonant frequency with the line inductance by switching over the DC link voltage compensation in the software or increase the smoothing. However, this can have a negative impact on the torque ripple at the motor output.
- Check the motor feeder cables.

F30015 (N, A) Power unit: Phase failure motor cable

Message class: Application/technological function faulted (17)

Message value: -

Component:	Motor
Response:	OFF2
Acknowledgment:	IMMEDIATELY
Cause:	A phase failure in the motor feeder cable was detected. The signal can also be output in the following case: - The motor is correctly connected, however the closed-speed control is instable and therefore an oscillating torque is generated. Note: Chassis power units do not feature phase failure monitoring.
Remedy:	- Check the motor feeder cables. - Check the speed controller settings.
Response upon: N:	NONE
Acknowl. upon N:	NONE
Response upon: A:	NONE
Acknowl. upon A:	NONE

A30016 (N) Power unit: Load supply switched off

Message class:	Line supply fault (2)
Message value:	%1
Component:	Power Unit
Response:	NONE
Acknowledgment:	NONE
Cause:	The DC link voltage is too low. Alarm value (r2124, interpret decimal): DC link voltage at the time of the trip [V].
Remedy:	- Switch on the load supply. - Check the line supply if necessary.
Response upon: N:	NONE
Acknowl. upon N:	NONE

F30017 Power unit: Hardware current limit has responded too often

Message class:	Power electronics faulted (5)
Message value:	Fault cause: %1 bin
Component:	Power Unit
Response:	OFF2
Acknowledgment:	IMMEDIATELY

Cause: The hardware current limitation in the relevant phase (see A30031, A30032, A30033) has responded too often. The number of times the limit has been exceeded depends on the design and type of power unit.
- Closed-loop control is incorrectly parameterized.
- Fault in the motor or in the power cables.
- The power cables exceed the maximum permissible length.
- Motor load too high
- Power unit defective.

Fault value (r0949, interpret binary):
Bit 0: Phase U
Bit 1: Phase V
Bit 2: Phase W
Additional bits:
Only for internal Siemens troubleshooting.
Note:
Fault value = 0 means that the phase with current limiting is not recognized (e.g. for blocksize device).

Remedy:
- Check the motor load.
- Check the power cable connections.
- Check the power cables for short-circuit or ground fault.
- Check the length of the power cables.

F30021 Drive: Ground fault

Message class: Ground fault / inter-phase short-circuit detected (7)
Message value: %1
Component: Power Unit
Response: OFF2
Acknowledgment: IMMEDIATELY
Cause: The drive has detected a ground fault.
Possible causes:
- Ground fault in the power cables.
- Ground fault at the motor.
- When the brake closes, this causes the hardware DC current monitoring to respond.
- Short-circuit at the braking resistor.

Fault value (r0949, interpret decimal):
0:
- The hardware DC current monitoring has responded.
- Short-circuit at the braking resistor.

> 0:
Absolute value summation current amplitude.

Remedy:
- Check the power cable connections.
- Check the motor.
- Check the cables and contacts of the brake connection (a wire is possibly broken).
- Check the braking resistor.

F30022 Power unit: Monitoring U_ce

Message class: Ground fault / inter-phase short-circuit detected (7)
Message value: Fault cause: %1 bin
Component: Power Unit
Response: OFF2
Acknowledgment: IMMEDIATELY

Cause: In the power unit, the monitoring of the collector-emitter voltage (U_ce) of the semiconductor has responded.
Possible causes:
- The power supply for power semiconductor gating missing.
- Short-circuit at the power unit output.
- Defective semiconductor in the power unit.

Fault value (r0949, interpret binary):
Bit 0: Short-circuit in phase U
Bit 1: Short-circuit in phase V
Bit 2: Short-circuit in phase W
Bit 3: Short-circuit in phase N
See also: r0949 (Fault value)

Remedy:
- Check the power cable connections.
- Select the defective semiconductor and replace.
- When alarm 30269 simultaneously occurs, then the power supply for the power semiconductor gating is overloaded. A hardware defect must be assumed. Contact Technical Support.

F30024 Power unit: Overtemperature thermal model

Message class: Power electronics faulted (5)
Message value: Power semiconductor: %1, temperature: [0.01 degrees C] %2
Component: Power Unit
Response: OFF2
Acknowledgment: IMMEDIATELY

Cause: The temperature difference between the power semiconductor involved and the heat sink has exceeded the permissible fault threshold.
- The permissible duty cycle was not maintained.
- Insufficient cooling, fan failure.
- Overload.
- Ambient temperature too high.
- Pulse frequency too high.

Fault value (r0949, interpret hexadecimal):
yyyyxxxx hex: yyyy= Power semiconductor, xxxx = Temperature in 0.01°C
See also: r0037 (Power unit temperatures)

Remedy:
- Adapt the duty cycle.
- Check whether the fan is running.
- Check the fan elements.
- Check whether the ambient temperature is in the permissible range.
- Check the motor load.
- Reduce the pulse frequency if this is higher than the rated pulse frequency.

F30025 Power unit: Chip overtemperature

Message class: Power electronics faulted (5)
Message value: Power semiconductor: %1, temperature: [0.01 degrees C] %2
Component: Power Unit
Response: OFF2
Acknowledgment: IMMEDIATELY

Cause: The chip temperature of the power semiconductor involved has exceeded the permissible fault threshold.
- The permissible duty cycle was not maintained.
- Insufficient cooling, fan failure.
- Overload.
- Ambient temperature too high.
- Pulse frequency too high.

Fault value (r0949, interpret hexadecimal):
yyyyxxxx hex: yyyy= Power semiconductor, xxxx = Temperature in 0.01°C

Remedy:
- Adapt the duty cycle.
- Check whether the fan is running.
- Check the fan elements.
- Check whether the ambient temperature is in the permissible range.
- Check the motor load.
- Reduce the pulse frequency if this is higher than the rated pulse frequency.

Note:
This fault can only be acknowledged after the alarm threshold for alarm A030252 has been fallen below.
See also: r0037 (Power unit temperatures)

F30026 (A) Power unit: DC link precharging asymmetry

Message class: Power electronics faulted (5)
Message value: %1
Component: Power Unit
Response: NONE
Acknowledgment: IMMEDIATELY
Cause: Asymmetry has occurred during DC link precharging.
This message can occur in the following cases:
- Asymmetrical line voltage dips, interruptions (possibly even very briefly for just a few milliseconds)
- One or several line phases failed / not connected
- Device damage

Fault value only for internal Siemens diagnostics.

Remedy: Caution: Continuous operation with F30026 is not permissible, and can damage the converter.
- Check the line supply and connection

Response upon: A: NONE
Acknowl. upon A: NONE

A30030 Power unit: Internal overtemperature alarm

Message class: Power electronics faulted (5)
Message value: %1
Component: Power Unit
Response: NONE
Acknowledgment: NONE
Cause: The temperature inside the drive converter has exceeded the permissible temperature limit.
- Insufficient cooling, fan failure.
- Overload.
- Ambient temperature too high.

Alarm value (r2124, interpret decimal):
Only for internal Siemens troubleshooting.

Remedy:
- Possibly use an additional fan.
- Check whether the ambient temperature is in the permissible range.

Notice:
This alarm is automatically withdrawn once the permissible temperature limit value has been fallen below minus 5 K.

A30031 Power unit: Hardware current limiting in phase U

Message class: Power electronics faulted (5)
Message value: -
Component: Power Unit
Response: NONE
Acknowledgment: NONE
Cause: Hardware current limit for phase U responded. The pulsing in this phase is inhibited for one pulse period.
- Closed-loop control is incorrectly parameterized.
- Fault in the motor or in the power cables.
- The power cables exceed the maximum permissible length.
- Motor load too high
- Power unit defective.

Remedy:
- Check the motor data.
- Check the motor circuit configuration (star/delta).
- Check the motor load.
- Check the power cable connections.
- Check the power cables for short-circuit or ground fault.
- Check the length of the power cables.

A30032 Power unit: Hardware current limiting in phase V

Message class: Power electronics faulted (5)
Message value: -
Component: Power Unit
Response: NONE
Acknowledgment: NONE
Cause: Hardware current limit for phase V responded. The pulsing in this phase is inhibited for one pulse period.
- Closed-loop control is incorrectly parameterized.
- Fault in the motor or in the power cables.
- The power cables exceed the maximum permissible length.
- Motor load too high
- Power unit defective.

Remedy:
- Check the motor data.
- Check the motor circuit configuration (star/delta).
- Check the motor load.
- Check the power cable connections.
- Check the power cables for short-circuit or ground fault.
- Check the length of the power cables.

A30033 Power unit: Hardware current limiting in phase W

Message class: Power electronics faulted (5)
Message value: -
Component: Power Unit
Response: NONE
Acknowledgment: NONE

Cause: Hardware current limit for phase W responded. The pulsing in this phase is inhibited for one pulse period.
- Closed-loop control is incorrectly parameterized.
- Fault in the motor or in the power cables.
- The power cables exceed the maximum permissible length.
- Motor load too high
- Power unit defective.

Remedy:
- Check the motor data.
- Check the motor circuit configuration (star/delta).
- Check the motor load.
- Check the power cable connections.
- Check the power cables for short-circuit or ground fault.
- Check the length of the power cables.

A30034 Power unit: Internal overtemperature

Message class: Power electronics faulted (5)
Message value: %1
Component: Power Unit
Response: NONE
Acknowledgment: NONE
Cause: The alarm threshold for internal overtemperature has been reached.
If the temperature inside the power unit increases up to the fault threshold, then fault F30036 is triggered.
- Ambient temperature might be too high.
- Insufficient cooling, fan failure.

Remedy:
- Check the ambient air temperature.
- Check the fan for the inside of the unit.

F30036 Power unit: Internal overtemperature

Message class: Power electronics faulted (5)
Message value: %1
Component: Power Unit
Response: OFF2
Acknowledgment: IMMEDIATELY
Cause: The temperature inside the converter has exceeded the permissible limit value.
- Insufficient cooling, fan failure.
- Overload.
- Ambient temperature too high.

Remedy:
- Check the internal fan.
- Check the fan elements.
- Check whether the ambient temperature is in the permissible range.

Notice:
This fault can only be acknowledged once the permissible temperature limit minus 5 K has been fallen below.

F30037 Power unit: Rectifier overtemperature

Message class: Power electronics faulted (5)
Message value: %1
Component: Power Unit
Response: OFF2
Acknowledgment: IMMEDIATELY

Cause: The temperature in the rectifier of the power unit has exceeded the permissible temperature limit.
- Insufficient cooling, fan failure.
- Overload.
- Ambient temperature too high.
- Line phase failure.

Fault value (r0949, interpret decimal):
Temperature [0.01 °C].

Remedy:
- Check whether the fan is running.
- Check the fan elements.
- Check whether the ambient temperature is in the permissible range.
- Check the motor load.
- Check the line phases.

Notice:
This fault can only be acknowledged after the alarm threshold for alarm A05004 has been undershot.

A30042 (N) Power unit: Fan has reached the maximum operating hours

Message class: Power electronics faulted (5)
Message value: %1
Component: Power Unit
Response: NONE
Acknowledgment: NONE

Cause: The maximum operating time of at least one fan will soon be reached, or has already been exceeded.
Alarm value (r2124, interpret binary):
Bit 0 = 1:
The wear counter of the heat sink fan has reached 99 %. The remaining service life is 1 %. After this 1 % has elapsed, bit 0 is cleared and bit 2 is set in the alarm value.
Bit 2 = 1:
The wear counter of the heat sink fan has exceeded 100 %.
Bit 8 = 1:
The wear counter of the 1st internal fan has reached 99 %. The remaining service life is 1 %. After this 1 % has elapsed, bit 8 is cleared and bit 10 is set in the alarm value.
Bit 10 = 1:
The wear counter of the 1st internal fan has exceeded 100 %.
Bit 16 = 1:
The wear counter of the 2nd internal fan has reached 99 %. The remaining service life is 1 %. After this 1 % has elapsed, bit 16 is cleared and bit 18 is set in the alarm value.
Bit 18 = 1:
The wear counter of the 2nd internal fan has exceeded 100 %.

Remedy: For the fan involved, carry out the following:
1. Replace the fan.
2. Reset the wear counter using the appropriate button in Startdrive or the web server.

See also: r0277 (Power unit fan wear counter)

Response upon: N: NONE
Acknowl. upon N: NONE

A30046 (F) Power unit: Undervoltage alarm

Message class: Power electronics faulted (5)
Message value: %1
Component: Power Unit
Response: NONE
Acknowledgment: NONE

Cause: Before the last restart, a problem occurred at the power unit power supply.
The voltage monitor in the internal FPGA of the PSA signals an undervoltage fault on the module.
Alarm value (r2124, interpret decimal):
Register value of the voltage fault register.

Remedy: - Check the 24 V DC voltage supply to power unit.
- Carry out a POWER ON (switch-off/switch-on) for the component.
- Replace the module if necessary.

Response upon: F: NONE

Acknowl. upon F: IMMEDIATELY

F30050 Power unit: 24 V supply overvoltage

Message class: Supply voltage fault (overvoltage) (3)

Message value: -

Component: Power Unit

Response: OFF2

Acknowledgment: POWER ON

Cause: The voltage monitor signals an overvoltage fault on the module.

Remedy: - Check the 24 V power supply.
- Replace the module if necessary.

F30051 Power unit: Motor holding brake short-circuit detected

Message class: External measured value / signal state outside the permissible range (16)

Message value: %1

Component: Power Unit

Response: OFF2

Acknowledgment: IMMEDIATELY

Cause: A short-circuit at the motor holding brake terminals has been detected.
Fault value (r0949, interpret decimal):
Only for internal Siemens troubleshooting.

Remedy: - Check the motor holding brake for a short-circuit.
- Check the connection and cable for the motor holding brake.

F30052 EEPROM data error

Message class: Hardware/software error (1)

Message value: %1

Component: Power Unit

Response: OFF2

Acknowledgment: POWER ON

Cause: The EEPROM data of the power unit module are incorrect.
Fault value (r0949, interpret hexadecimal):
Only for internal Siemens troubleshooting.

Remedy: Replace the power unit module or update the EEPROM data.

F30053 FPGA data faulty

Message class: Hardware/software error (1)

Message value: %1

Component: Power Unit

Response: NONE

Acknowledgment: POWER ON

Cause: The FPGA data of the power unit are faulty. This can be caused, for example, if a firmware update is interrupted.

Remedy: Replace the power unit or update of the FPGA data by updating the firmware.
Note:
If this fault occurs after a firmware update, then update the firmware again.

F30055 Power unit: Braking chopper overcurrent

Message class: Braking Module faulted (14)

Message value: -

Component: None

Response: OFF2

Acknowledgment: IMMEDIATELY

Cause: An overcurrent condition has occurred in the braking chopper.

Remedy: - Check whether the braking resistor has a short-circuit.
- For an external braking resistor, check whether the resistor may have been dimensioned too small.
Note:
The braking chopper is only enabled again at pulse enable after the fault has been acknowledged.

A30057 Power unit: Line asymmetry

Message class: Line supply fault (2)

Message value: %1

Component: Power Unit

Response: NONE

Acknowledgment: NONE

Cause: Frequencies have been detected on the DC link voltage that would suggest line asymmetry or failure of a line phase.
It is also possible that a motor phase has failed.
If these frequencies occur with the same or even higher amplitudes, then after a device-specific time elapses, fault F30011 is output
Alarm value, only for internal Siemens troubleshooting.

Remedy: - Check the line phase connection.
- Check the motor feeder cable connections.
If there is no phase failure of the line or motor, then line asymmetry is involved.
- Reduce the power in order to avoid fault F30011.

F30058 (N, A) Power unit: Heat sink fan defective

Message class: External measured value / signal state outside the permissible range (16)

Message value: Fault cause: %1 bin

Component: Power Unit

Response: OFF2

Acknowledgment: IMMEDIATELY

Cause: The feedback signal of the heat sink fan signals a fault, or there is a communication error with the fan.
- Fan defective.
- Fan blocked.
- Feedback signal error.
Fault value (r0949, interpret binary):
Value in bits 0 to 15:
0: Feedback signal of the fan signals a fault
1: Internal communication error to the fan
Bits 16 to 31 are only for internal Siemens diagnostics.

Remedy:
- Check the heat sink fan and replace if necessary.
- For communication errors, update the software or replace the power unit.

Note:
- If the fault can be acknowledged, this does not necessarily mean that the cause of the fault has been resolved. It is also possible that the software switched off the fan, and therefore can no longer evaluate the feedback signal.

Response upon: N: NONE
Acknowl. upon N: NONE
Response upon: A: NONE
Acknowl. upon A: NONE

F30059 Power unit: Internal fan 1 defective

Message class: Auxiliary unit faulted (20)
Message value: %1
Component: Power Unit
Response: OFF2
Acknowledgment: IMMEDIATELY
Cause: The feedback signal of internal fan 1 signals a fault, or there is a communication error with the fan.
Fault value (r0949, interpret decimal):
0: Feedback signal of the fan signals a fault
1: Internal communication error to the fan
Remedy:
- Check internal fan 1 and replace if necessary.
- For communication errors, update the software or replace the power unit.

Note:
If the fault can be acknowledged, this does not necessarily mean that the cause of the fault has been resolved. It is also possible that the software switched off the fan, and therefore can no longer evaluate the feedback signal.

F30062 Bypass contactor opened under current

Message class: Infeed faulted (13)
Message value: -
Component: Power Unit
Response: OFF2
Acknowledgment: IMMEDIATELY
Cause: The bypass contactor of the precharging unit has been opened under current.
Possible causes:
- A defect at the bypass contactor

Remedy: It is urgently recommended that the components involved are replaced to prevent serious damage to the entire converter line-up.

F30068 Power unit: Undertemperature inverter heat sink

Message class: Power electronics faulted (5)
Message value: %1
Component: Power Unit
Response: OFF2
Acknowledgment: IMMEDIATELY

Cause: The actual inverter heat sink temperature is below the permissible minimum value.
Possible causes:
- The power unit is being operated at an ambient temperature that lies below the permissible range.
- The temperature sensor evaluation is defective.
Fault value (r0949, interpret decimal):
Inverter heat sink temperature [0.1 °C].

Remedy:
- Ensure that higher ambient temperatures prevail.
- Replace the power unit.

A30076 (N) Power unit: Thermal overload braking resistor alarm

Message class: Braking Module faulted (14)
Message value: %1
Component: Power Unit
Response: NONE
Acknowledgment: NONE

Cause: The energy absorbed by the braking resistor has exceeded the alarm threshold of 80 %. If the power unit is still operated in the generator mode, then this can reach the shutdown threshold. To avoid overheating of the braking resistor, use of the braking resistor is inhibited and alarm A30077 is output.
Alarm value (r2124, interpret decimal):
Energy absorbed by the braking resistor [Ws].

Remedy: Reduce the power when generating.
Note:
For a DC link coupling, the generating power of all of the coupled power units must be taken into consideration.

Response upon: N: NONE
Acknowl. upon N: NONE

A30077 (N) Power unit: Thermal overload braking resistor

Message class: Braking Module faulted (14)
Message value: %1
Component: Power Unit
Response: NONE
Acknowledgment: NONE

Cause: The braking resistor is thermally overloaded. This is the reason that its use was inhibited.
Alarm value (r2124, interpret decimal):
Energy absorbed by the braking resistor [Ws].

Remedy: Reduce the power when generating.
Note:
- Once the braking resistor has thermally recovered, it is enabled for further use.
- For a DC link coupling, the generating power of all the coupled power units must be taken into consideration.

Response upon: N: NONE
Acknowl. upon N: NONE

A30079 (N) Power unit: Referred to the supply voltage, the DC link voltage is too high

Message class: Infeed faulted (13)
Message value: %1
Component: Power Unit
Response: NONE
Acknowledgment: NONE

Cause: The alarm is output if the following conditions are simultaneously satisfied:
1. The device supply voltage (p0210) was reduced.
2. A DC link voltage is present, which is too high when referred to the new supply voltage.
DC link precharging cannot be completed as this could place some converter components at risk.
Alarm value (r2124, interpret decimal):
Voltage value to which the DC link voltage must, in the meantime, be reduced in order to complete precharging [V].
See also: p0210 (Device supply voltage)

Remedy: As a minimum, reduce the DC link voltage to the voltage specified in the alarm value.
Note:
The alarm is automatically withdrawn if the DC link voltage drops below the voltage specified in the alarm value.
Fault F07802 is output if an attempt is made to enable the pulses even though an alarm is active.

Response upon: N: NONE

Acknowl. upon N: NONE

F30081 Power unit: Switching operations too frequent

Message class: Power electronics faulted (5)

Message value: Fault cause: %1 bin

Component: Power Unit

Response: OFF2

Acknowledgment: IMMEDIATELY

Cause: The power unit has executed too many switching operations for current limitation.
- Closed-loop control is incorrectly parameterized.
- Motor has a short-circuit or fault to ground (frame).
- U/f operation: Up ramp set too low.
- U/f operation: Rated motor current is significantly higher than that of the power section.
- Infeed: High discharge and post-charging currents for line voltage dip.
- Infeed: High post-charging currents for overload when motoring and DC link voltage dip.
- Infeed: Short-circuit currents at switch-on as there is no line reactor.
- Power cables are not correctly connected.
- Power cables exceed the maximum permissible length.
- Power unit defective.

Fault value (r0949, interpret bitwise):
Bit 0: Phase U.
Bit 1: Phase V.
Bit 2: Phase W.

Remedy:
- Check the motor data, carry out commissioning if required.
- Check the motor circuit configuration (star-delta)
- U/f operation: Increase up ramp.
- U/f operation: Check the rated currents of the motor and power unit.
- Infeed: Check the line quality.
- Infeed: Reduce the motor load.
- Infeed: Correct connection of the line reactor.
- Check the power cable connections.
- Check the power cables for short-circuit or ground fault.
- Check the length of the power cables.
- Replace power unit.

F30105 PU: Actual value sensing fault

Message class: Power electronics faulted (5)

Message value: -

Component: Power Unit
Response: OFF2
Acknowledgment: IMMEDIATELY
Cause: At least one incorrect actual value channel was detected on the Power Stack Adapter (PSA).
The incorrect actual value channels are displayed in the following diagnostic parameters.
Remedy: Evaluate the diagnostic parameters.
If the actual value channel is incorrect, check the components and if required, replace.

A30250 (N) Power unit: Overtemperature heat sink inverter

Message class: Power electronics faulted (5)
Message value: -
Component: Power Unit
Response: NONE
Acknowledgment: NONE
Cause: The alarm threshold for overtemperature at the inverter heat sink has been reached.
Fault F30004 is initiated if the temperature of the heat sink increases by 5 K.
Remedy: Check the following:
- Is the ambient temperature within the defined limit values?
- Have the load conditions and the duty cycle been appropriately dimensioned?
- Has the cooling failed?

Response upon: N: NONE
Acknowl. upon N: NONE

A30251 (N) Power unit: Rectifier overtemperature

Message class: Power electronics faulted (5)
Message value: -
Component: Power Unit
Response: NONE
Acknowledgment: NONE
Cause: The alarm threshold for the overtemperature of the rectifier has been reached. The response is set using p0290.
If the temperature of the rectifier increases by an additional 5 K, then fault F30037 is triggered.
Remedy: Check the following:
- Is the ambient temperature within the defined limit values?
- Have the load conditions and the duty cycle been appropriately dimensioned?
- Has the fan failed? Check the direction of rotation.
- Has a phase of the line supply failed?
- Is an arm of the supply (incoming) rectifier defective?

Response upon: N: NONE
Acknowl. upon N: NONE

A30252 Power unit: Chip overtemperature alarm

Message class: Power electronics faulted (5)
Message value: Power semiconductor: %1, temperature: [0.01 degrees C] %2
Component: Power Unit
Response: NONE
Acknowledgment: NONE

Cause: The chip temperature of the power semiconductor involved has exceeded the permissible alarm threshold.
Note:
- If the chip temperature of the power semiconductor involved increases by 5K, then fault F30025 is initiated.

Alarm value (r2124, interpret hexadecimal):
yyyyxxxx hex: yyyy= Power semiconductor, xxxx = Temperature in 0.01°C

Remedy: Check the following:
- Is the ambient temperature within the defined limit values?
- Have the load conditions and the duty cycle been appropriately dimensioned?
- Has the cooling failed?
- Pulse frequency too high?

A30253 Power unit: Overtemperature thermal model alarm

Message class: Power electronics faulted (5)

Message value: Power semiconductor: %1, temperature: [0.01 degrees C] %2

Component: Power Unit

Response: NONE

Acknowledgment: NONE

Cause: The temperature difference between the power semiconductor involved and the heat sink has exceeded the permissible alarm threshold.
The maximum output current is reduced as overload response.

Alarm value (r2124, interpret hexadecimal):
yyyyxxxx hex: yyyy= Power semiconductor, xxxx = Temperature in 0.01°C

Remedy: Not necessary.
The alarm is automatically withdrawn once the alarm threshold has been fallen below.
Note:
If the temperature continues to increase, this can result in fault F30024.

A30256 Power unit: Overload I2t (AC)

Message class: Power electronics faulted (5)

Message value: -

Component: Power Unit

Response: NONE

Acknowledgment: NONE

Cause: The alarm threshold for the I2t overload on the AC side of the power unit has been exceeded. Depending on the selected overload response, the output current and therefore the output frequency can be reduced. If the current reduction is not sufficient to thermally relieve the power unit, then when the fault threshold for overload is reached the drive switches off the power unit and outputs fault F30005.
See also: r0036 (Power unit overload)

Remedy: - Reduce the continuous load.
- Adapt the duty cycle.
- Check the rated currents of the motor and power unit.
See also: p0290 (Power unit overload response)

A30257 Power unit: Overload I2t (DC)

Message class: Power electronics faulted (5)

Message value: -

Component: Power Unit

Response: NONE

Acknowledgment: NONE

Cause: The alarm threshold for the I2t overload on the DC side of the power unit has been exceeded.
Depending on the selected overload response, the output current and therefore the output frequency can be reduced. If the current reduction is not sufficient to thermally relieve the power unit, then when the fault threshold for overload is reached the drive switches off the power unit and outputs fault F30258.
See also: r0036 (Power unit overload)

Remedy: - Reduce the continuous load.
- Adapt the duty cycle.
See also: p0290 (Power unit overload response)

F30258 Power unit: Overload I2t (DC)

Message class: Power electronics faulted (5)
Message value: %1
Component: Power Unit
Response: OFF2
Acknowledgment: IMMEDIATELY
Cause: The fault threshold for the I2t overload on the DC side of the power unit has been exceeded.
The permissible duty cycle or the continuous load was not maintained.
Fault value (r0949, interpret decimal):
I2t (DC) [100 % = 16384]
See also: r0036 (Power unit overload)
Remedy: - Reduce the continuous load.
- Adapt the duty cycle.
See also: p0307 (Rated motor power)

A30259 Braking resistor value too low

Message class: Braking Module faulted (14)
Message value: %1
Component: Power Unit
Response: NONE
Acknowledgment: NONE
Cause: The braking resistor value used in p0216 is too low.
This can result in an excessively high braking current.

Alarm value (r2124, interpret decimal):
Minimum limit value of the braking resistor [0.1 Ohm]
See also: p0216 (Braking resistance value)
Remedy: - Use a braking resistor with the appropriate resistance value
- Observe the product documentation

F30260 Power unit: Fault in the driver supply for the power semiconductor

Message class: Power electronics faulted (5)
Message value: -
Component: Power Unit
Response: OFF2
Acknowledgment: IMMEDIATELY
Cause: A fault has occurred in the driver supply of the power semiconductor.
Remedy: There is a hardware defect. The device must be replaced.

F30262 Power unit: Braking chopper defective

Message class: Power electronics faulted (5)

Message value: -
Component: Power Unit
Response: OFF2
Acknowledgment: IMMEDIATELY
Cause: The braking chopper is defective.
Remedy: Replace the converter.

F30263 Power unit: Braking chopper upper defective

Message class: Power electronics faulted (5)
Message value: -
Component: Power Unit
Response: OFF2
Acknowledgment: IMMEDIATELY
Cause: The upper braking chopper is defective.
Remedy: Replace the converter.

F30264 Power unit: Braking chopper inhibited due to implausible DC link voltage

Message class: Braking Module faulted (14)
Message value: %1
Component: Power Unit
Response: OFF2
Acknowledgment: IMMEDIATELY
Cause: The braking chopper was inhibited because the unloaded DC link voltage continuously reaches or exceeds the chopper activation threshold. This prevents the braking chopper from being permanently active and possibly damaged.

Possible causes:
The value of parameter p0210 does not match the line voltage.

Fault value (r0949, interpret decimal): DC link voltage [V]
Remedy: Replace the converter.

F30265 Power unit: Line voltage failure detected

Message class: Power electronics faulted (5)
Message value: -
Component: Power Unit
Response: OFF3
Acknowledgment: IMMEDIATELY
Cause: Line voltage failure was detected
Remedy: - Switch on the line voltage.
- To increase the degree of ruggedness, the delay time in p3234 can be increased.
- If necessary, line voltage failure detection can be deactivated using p2149.16.
See also: p2149, p3234

A30267 Power unit: Active power overload

Message class: Power electronics faulted (5)
Message value: -
Component: Power Unit
Response: NONE

Acknowledgment: NONE

Cause: The alarm threshold for the active power overload of the power unit has been exceeded. Depending on the selected overload response, the output current and therefore the output frequency can be reduced. If the current reduction is not sufficient to thermally relieve the power unit, then when the fault threshold for overload is reached the drive switches off the power unit and outputs fault F30268.
See also: r0036 (Power unit overload)

Remedy: - Reduce the continuous load.
- Adapt the duty cycle.
See also: p0290 (Power unit overload response)

F30268 Power unit: Active power overload

Message class: Power electronics faulted (5)

Message value: %1

Component: Power Unit

Response: OFF2

Acknowledgment: IMMEDIATELY

Cause: The fault threshold for the active power overload of the power unit has been exceeded.
The permissible duty cycle or the continuous load was not maintained.
Fault value (r0949, interpret decimal):
Active power [100 % = 16384]
See also: r0036 (Power unit overload)

Remedy: - Reduce the continuous load.
- Adapt the duty cycle.
See also: p0307 (Rated motor power)

A30269 Power unit: Internal hardware fault

Message class: Power electronics faulted (5)

Message value: Fault cause: %1 bin

Component: Power Unit

Response: NONE

Acknowledgment: NONE

Cause: Frequent occurrence can mean that there is a hardware defect.
The component involved is specified in the alarm value.

Alarm value (r2124, interpret binary):
Bit 0 = 1: Power supply board
Bit 1 = 1: IGBT gate drive
Bit 2 - bit 31: Reserved

Remedy: - Contact Technical Support.

A30502 Power unit: DC link overvoltage

Message class: DC link overvoltage (4)

Message value: %1

Component: Power Unit

Response: NONE

Acknowledgment: NONE

Cause: The power unit has detected overvoltage in the DC link on a pulse inhibit.
- Device supply voltage too high.
- Line reactor incorrectly dimensioned.
Alarm value (r2124, interpret decimal):
DC link voltage [1 bit = 100 mV].
See also: r0070 (Actual DC link voltage)

Remedy: - Check the device supply voltage (p0210).
- Check the dimensioning of the line reactor.
See also: p0210 (Device supply voltage)

F30524 SI: Safety EEPROM data error

Message class: Safety monitoring channel has identified an error (10)
Message value: %1
Component: Power Unit
Response: OFF2
Acknowledgment: POWER ON
Cause: Safety relevant EEPROM data are not correct.
This message results in an STO (Safe Torque Off).

Message value (r60049, interpret decimal): Only for internal Siemens fault diagnostics.
Remedy: Replace the module

F30526 SI: Safety HW version of the Motor Module incorrect

Message class: Safety monitoring channel has identified an error (10)
Message value: %1
Component: Power Unit
Response: OFF2
Acknowledgment: POWER ON
Cause: Safety relevant hardware version is not compatible with this software.
This fault results in an STO (Safe Torque Off).

Fault value (r0949, interpret decimal): Only for internal Siemens fault diagnostics.
Remedy: Update the software or exchange the module for this software.

C30603 SI: Module temperature - limit value exceeded

Message class: Safety monitoring channel has identified an error (10)
Message value: -
Variant: S200 PTI
Component: None
Response: OFF2
Acknowledgment: IMMEDIATELY
Cause: A safe monitoring function has detected that the module temperature has exceeded a limit value. STO (Safe Torque Off) was initiated to maintain the safe state.
Remedy: - Check the ambient air temperature.
- Check the module fan.
- Operate the module in the permissible range.

F30604 SI: Safety EEPROM data error

Message class: Safety monitoring channel has identified an error (10)

Message value: %1
Variant: S200 PTI
Component: Power Unit
Response: OFF2
Acknowledgment: POWER ON
Cause: Safety relevant EEPROM data are not correct.
This message results in an STO (Safe Torque Off).

Message value (r60049, interpret decimal): Only for internal Siemens fault diagnostics.
Remedy: Replace the module

A30605 SI: Checksum error has occurred

Message class: Safety monitoring channel has identified an error (10)
Message value: %1
Variant: S200 PTI
Component: None
Response: NONE
Acknowledgment: NONE
Cause: A checksum error (CRC error) has occurred in the converter program memory.
Remedy: - Carry out a POWER ON (switch-off/switch-on).
- Upgrade firmware to later version.
- Contact Technical Support.

F30606 SI: Safety HW version of the Motor Module incorrect

Message class: Safety monitoring channel has identified an error (10)
Message value: %1
Variant: S200 PTI
Component: Power Unit
Response: OFF2
Acknowledgment: POWER ON
Cause: Safety relevant hardware version is not compatible with this software.
This fault results in an STO (Safe Torque Off).

Fault value (r0949, interpret decimal): Only for internal Siemens fault diagnostics.
Remedy: Update the software or exchange the module for this software.

C30649 SI: Internal software error

Message class: Hardware/software error (1)
Message value: Module: %1, line: %2
Variant: S200 PTI
Component: Power Unit
Response: OFF2
Acknowledgment: IMMEDIATELY
Cause: An internal error has occurred in the Safety Integrated software.
Note:
This message results in an STO (Safe Torque Off) that cannot be acknowledged.
Message value (r60049, interpret hexadecimal):
Only for internal Siemens troubleshooting.

Remedy:
- Carry out a POWER ON (switch-off/switch-on) for all components.
- Repeat commissioning of "Safety Integrated" and carry out a POWER ON.
- Upgrade firmware to later version.
- Contact Technical Support.
- Replace hardware component.

N30800 (F) Power unit: Group signal

Message class: Power electronics faulted (5)
Message value: -
Component: Power Unit
Response: OFF2
Acknowledgment: NONE
Cause: The power unit has detected at least one fault.
Remedy: Evaluate the other messages that are presently available.
Response upon: F: OFF2
Acknowl. upon F: IMMEDIATELY

F30801 Power unit: Sign-of-life missing

Message class: Internal (DRIVE-CLiQ) communication error (12)
Message value: Component number: %1, fault cause: %2
Component: Control Unit (CU)
Response: OFF2
Acknowledgment: IMMEDIATELY
Cause: Internal communications error.
The computing time load might be too high.
Message value (r0949/r2124):
0000yyxx hex: yy = component number, xx = error cause
xx = 0A hex (10 dec):
The sign-of-life bit in the received telegram is not set.
Remedy: Contact Technical Support.

F30802 Power unit: Time slice overflow

Message class: Hardware/software error (1)
Message value: %1
Component: Power Unit
Response: OFF2
Acknowledgment: IMMEDIATELY
Cause: A time slice overflow has occurred.
Fault value (r0949, interpret decimal):
xx: Time slice number
Remedy:
- Carry out a POWER ON (switch-off/switch-on) for all components.
- Upgrade firmware to later version.
- Contact Technical Support.

F30804 (N, A) Power unit: Checksum error occurred

Message class: Hardware/software error (1)
Message value: %1
Component: Power Unit
Response: OFF2

Acknowledgment: IMMEDIATELY
Cause: A checksum error (CRC error) has occurred for the power unit.
Remedy: - Carry out a POWER ON (switch-off/switch-on) for all components.
- Upgrade firmware to later version.
- Contact Technical Support.
Response upon: N: NONE
Acknowl. upon N: NONE
Response upon: A: NONE
Acknowl. upon A: NONE

F30805 Power unit: EEPROM checksum error

Message class: Hardware/software error (1)
Message value: %1
Component: Power Unit
Response: OFF2
Acknowledgment: IMMEDIATELY
Cause: Internal parameter data is corrupted.
Fault value (r0949, interpret hexadecimal):
01: EEPROM access error.
02: Too many blocks in the EEPROM.
Remedy: Replace the module.

F30809 Power unit: Switching information not valid

Message class: Hardware/software error (1)
Message value: -
Component: Power Unit
Response: OFF2
Acknowledgment: IMMEDIATELY
Cause: For 3P gating unit, the following applies:
The last switching status word in the setpoint telegram is identified by the end ID. Such an end ID was not found.
Remedy: - Carry out a POWER ON (switch-off/switch-on) for all components.
- Upgrade firmware to later version.
- Contact Technical Support.

F30810 Power unit: Watchdog timer expired

Message class: Hardware/software error (1)
Message value: -
Component: Power Unit
Response: OFF2
Acknowledgment: IMMEDIATELY
Cause: The watchdog timer has expired. This can only be caused by a fatal software error.
Remedy: - Carry out a POWER ON (switch-off/switch-on) for all components.
- Upgrade firmware to later version.
- Contact Technical Support.

F30815 Power unit: Processor clock signal error

Message class: Hardware/software error (1)
Message value: -
Component: Power Unit

Response: OFF2
Acknowledgment: POWER ON
Cause: The processor clock signal monitoring has signaled an error. This can involve the signal itself or its PLL.
Remedy: - Replace the hardware.
- Contact Technical Support.

F30820 Power unit: Telegram error

Message class: Internal (DRIVE-CLiQ) communication error (12)
Message value: Component number: %1, fault cause: %2
Component: Power Unit
Response: OFF2
Acknowledgment: IMMEDIATELY
Cause: Internal communications error.
Error cause:
1 (= 01 hex):
Checksum error (CRC error).
2 (= 02 hex):
Telegram is shorter than specified in the length byte or in the receive list.
3 (= 03 hex):
Telegram is longer than specified in the length byte or in the receive list.
4 (= 04 hex):
The length of the received telegram does not match the receive list.
5 (= 05 hex):
The type of the received telegram does not match the receive list.
6 (= 06 hex):
The address of the component in the telegram and in the receive list do not match.
7 (= 07 hex):
A SYNC telegram is expected - but the received telegram is not a SYNC telegram.
8 (= 08 hex):
No SYNC telegram is expected - but the received telegram is one.
9 (= 09 hex):
The error bit in the received telegram is set.
16 (= 10 hex):
The received telegram is too early.
Note regarding the message value:
The individual information is coded as follows in the message value (r0949/r2124):
0000yyxx hex: yy = component number, xx = error cause
Remedy: - Carry out a POWER ON (switch-off/switch-on).
- Check the electrical cabinet design and cable routing for EMC compliance.

F30835 Power unit: Cyclic data transfer error

Message class: Internal (DRIVE-CLiQ) communication error (12)
Message value: Component number: %1, fault cause: %2
Component: Power Unit
Response: OFF2
Acknowledgment: IMMEDIATELY

Cause: Internal communications error. The nodes do not send and receive in synchronism.
Error cause:
33 (= 21 hex):
The cyclic telegram has not been received.
34 (= 22 hex):
Timeout in the telegram receive list.
64 (= 40 hex):
Timeout in the telegram send list.
Note regarding the message value:
The individual information is coded as follows in the message value (r0949/r2124):
0000yyxx hex: yy = component number, xx = error cause

Remedy: - Carry out a POWER ON.
- Replace the component involved.

F30836 Power unit: Send error

Message class: Internal (DRIVE-CLiQ) communication error (12)
Message value: Component number: %1, fault cause: %2
Component: Power Unit
Response: OFF2
Acknowledgment: IMMEDIATELY
Cause: Internal communications error. Data were not able to be sent.
Error cause:
65 (= 41 hex):
Telegram type does not match send list.
Note regarding the message value:
The individual information is coded as follows in the message value (r0949/r2124):
0000yyxx hex: yy = component number, xx = error cause
Remedy: Carry out a POWER ON.

F30845 Power unit: Cyclic data transfer error

Message class: Internal (DRIVE-CLiQ) communication error (12)
Message value: Component number: %1, fault cause: %2
Component: Power Unit
Response: OFF2
Acknowledgment: IMMEDIATELY
Cause: Internal communications error.
Error cause:
11 (= 0B hex):
Synchronization error during alternating cyclic data transfer.
Note regarding the message value:
The individual information is coded as follows in the message value (r0949/r2124):
0000yyxx hex: yy = component number, xx = error cause
Remedy: Carry out a POWER ON (switch-off/switch-on).

F30850 Power unit: Internal software error

Message class: Hardware/software error (1)
Message value: %1
Component: Power Unit
Response: OFF1
Acknowledgment: POWER ON

Cause: An internal software error has occurred in the power unit.
Fault value (r0949, interpret decimal):
Only for internal Siemens troubleshooting.

Remedy:
- Replace power unit.
- If required, upgrade the firmware in the power unit.
- Contact Technical Support.

F30851 Power unit (CU): Sign-of-life missing

Message class: Internal (DRIVE-CLiQ) communication error (12)

Message value: Component number: %1, fault cause: %2

Component: Power Unit

Response: OFF2

Acknowledgment: IMMEDIATELY

Cause: Internal communications error.
The component did not set the sign-of-life.
Message value (r0949/r2124):
0000yyxx hex: yy = component number, xx = error cause
xx = 0A hex (10 dec):
The sign-of-life bit in the received telegram is not set.

Remedy:
- Deselect functions that are not required.
- Replace the component involved.

A30853 Power unit: Sign-of-life error cyclic data

Message class: General drive fault (19)

Message value: -

Component: Control Unit (CU)

Response: NONE

Acknowledgment: NONE

Cause: The cyclic setpoint telegrams of the power unit were not refreshed on time.

Remedy:
- Check the power unit and if required replace.

F30860 Power unit (CU): Telegram error

Message class: Internal (DRIVE-CLiQ) communication error (12)

Message value: Component number: %1, fault cause: %2

Component: Power Unit

Response: OFF2

Acknowledgment: IMMEDIATELY

Cause: Internal communications error.
Error cause:
1 (= 01 hex):
Checksum error (CRC error).
2 (= 02 hex):
Telegram is shorter than specified in the length byte or in the receive list.
3 (= 03 hex):
Telegram is longer than specified in the length byte or in the receive list.
4 (= 04 hex):
The length of the received telegram does not match the receive list.
5 (= 05 hex):
The type of the received telegram does not match the receive list.
6 (= 06 hex):
The address of the power unit in the telegram and in the receive list do not match.
9 (= 09 hex):
The internal communications from the component involved signals a failure of the supply voltage.
16 (= 10 hex):
The received telegram is too early.
17 (= 11 hex):
CRC error and the received telegram is too early.
18 (= 12 hex):
The telegram is shorter than that specified in the length byte or in the receive list and the received telegram is too early.
19 (= 13 hex):
The telegram is longer than that specified in the length byte or in the receive list and the received telegram is too early.
20 (= 14 hex):
The length of the received telegram does not match the receive list and the received telegram is too early.
21 (= 15 hex):
The type of the received telegram does not match the receive list and the received telegram is too early.
22 (= 16 hex):
The address of the power unit in the telegram and in the receive list does not match and the received telegram is too early.
25 (= 19 hex):
The error bit in the received telegram is set and the received telegram is too early.
Note regarding the message value:
The individual information is coded as follows in the message value (r0949/r2124):
0000yyxx hex: yy = component number, xx = error cause

Remedy: - Carry out a POWER ON (switch-off/switch-on).
- Check the electrical cabinet design and cable routing for EMC compliance.

F30875 Power unit: Supply voltage failed

Message class: Supply voltage fault (undervoltage) (3)
Message value: Component number: %1, fault cause: %2
Component: Power Unit
Response: OFF2
Acknowledgment: IMMEDIATELY

Cause: The component involved has signaled that the 24 V supply has failed.
Error cause:
9 (= 09 hex):
The supply voltage for the component has failed.
Note regarding the message value:
The individual information is coded as follows in the message value (r0949/r2124):
0000yyxx hex: yy = component number, xx = error cause

Remedy: - Check the supply voltage wiring (interrupted cable, contacts, ...).
- Check the dimensioning of the 24 V supply, check cable lengths.

F30885 Power unit CU (CU): Cyclic data transfer error

Message class: Internal (DRIVE-CLiQ) communication error (12)

Message value: Component number: %1, fault cause: %2

Component: Power Unit

Response: OFF2

Acknowledgment: IMMEDIATELY

Cause: Internal communications error.
The nodes do not send and receive in synchronism.
Error cause:
26 (= 1A hex):
Sign-of-life bit in the received telegram not set and the received telegram is too early.
33 (= 21 hex):
The cyclic telegram has not been received.
34 (= 22 hex):
Timeout in the telegram receive list.
64 (= 40 hex):
Timeout in the telegram send list.
98 (= 62 hex):
Error at the transition to cyclic operation.
Note regarding the message value:
The individual information is coded as follows in the message value (r0949/r2124):
0000yyxx hex: yy = component number, xx = error cause

Remedy: - Check the supply voltage of the component involved.
- Carry out a POWER ON.
- Replace the component involved.

F30886 Power unit (CU): Error when sending

Message class: Internal (DRIVE-CLiQ) communication error (12)

Message value: Component number: %1, fault cause: %2

Component: Power Unit

Response: OFF2

Acknowledgment: IMMEDIATELY

Cause: Internal communications error.
Data were not able to be sent.
Error cause:
65 (= 41 hex):
Telegram type does not match send list.
Note regarding the message value:
The individual information is coded as follows in the message value (r0949/r2124):
0000yyxx hex: yy = component number, xx = error cause

Remedy: Carry out a POWER ON.

F30895	Power unit (CU): Alternating cyclic data transfer error
Message class:	Internal (DRIVE-CLiQ) communication error (12)
Message value:	Component number: %1, fault cause: %2
Component:	Power Unit
Response:	OFF2
Acknowledgment:	IMMEDIATELY
Cause:	Communications error. Error cause: 11 (= 0B hex): Synchronization error during alternating cyclic data transfer. Note regarding the message value: The individual information is coded as follows in the message value (r0949/r2124): 0000yyxx hex: yy = component number, xx = error cause
Remedy:	Carry out a POWER ON (switch-off/switch-on).

F30896	Power unit (CU): Inconsistent component properties
Message class:	Internal (DRIVE-CLiQ) communication error (12)
Message value:	Component number: %1
Component:	Power Unit
Response:	OFF2
Acknowledgment:	IMMEDIATELY
Explanation of the message value:	For %1 Component in target topology
Cause:	The properties of the component (power unit), specified by the fault value, have changed in an incompatible fashion with respect to the properties when running up. Fault value (r0949, interpret decimal): Component number.
Remedy:	- Carry out a POWER ON.

F30899 (N, A)	Power unit: Unknown fault
Message class:	Power electronics faulted (5)
Message value:	New message: %1
Component:	Power Unit
Response:	NONE
Acknowledgment:	IMMEDIATELY
Cause:	A fault occurred on the power unit, which cannot be interpreted by the converter firmware. This can occur if the firmware on this component is more recent than the converter firmware. Fault value (r0949, interpret decimal): Fault number. Note: If required, the significance of this new fault can be read about in a more recent description of the converter.
Remedy:	- Replace the firmware on the power unit by an older firmware version. - Upgrade the converter firmware.
Response upon: N:	NONE
Acknowl. upon N:	NONE
Response upon: A:	NONE
Acknowl. upon A:	NONE

F30903 Power unit: I2C bus error occurred

Message class: Hardware/software error (1)
Message value: %1
Component: Power Unit
Response: NONE
Acknowledgment: IMMEDIATELY
Cause: Communications error with an EEPROM or an analog/digital converter.
Fault value (r0949, interpret hexadecimal):
80000000 hex:
- Internal software error.
00000001 hex ... 0000FFFF hex:
- Module fault.
Remedy: For fault value = 80000000 hex:
- Upgrade firmware to later version.
For fault value = 00000001 hex ... 0000FFFF hex:
- Replace the module.

F30907 Power unit: FPGA configuration unsuccessful

Message class: Hardware/software error (1)
Message value: -
Component: Power Unit
Response: OFF2
Acknowledgment: IMMEDIATELY
Cause: During initialization within the power unit, an internal software error has occurred.
Remedy: - If required, upgrade the firmware in the power unit.
- Replace power unit.
- Contact Technical Support.

A30919 Power unit: Temperature monitoring failed

Message class: Overtemperature of the electronic components (6)
Message value: %1
Component: Power Unit
Response: NONE
Acknowledgment: NONE
Cause: The temperature monitoring in the power unit has failed.
Fault-free operation of the drive system is no longer guaranteed.
Alarm value (r2124, interpret binary):
Bit 0: Sensor 1 for the internal temperature can no longer be evaluated.
Bit 1: Sensor 2 for the internal temperature can no longer be evaluated.
Remedy: Replace the power unit immediately.

F30950 Power unit: Internal software error

Message class: Hardware/software error (1)
Message value: %1
Component: Power Unit
Response: OFF2
Acknowledgment: POWER ON

Cause: An internal software error has occurred.
Fault value (r0949, interpret decimal):
Information about the fault source.
Only for internal Siemens troubleshooting.

Remedy: - If necessary, upgrade the firmware in the power unit to a later version.
- Contact Technical Support.

A30999 (F, N) Power unit: Unknown alarm

Message class: Power electronics faulted (5)

Message value: New message: %1

Component: Power Unit

Response: NONE

Acknowledgment: NONE

Cause: An alarm has occurred on the power unit, which cannot be interpreted by the converter firmware.
This can occur if the firmware on this component is more recent than the firmware on the converter.
Alarm value (r2124, interpret decimal):
Alarm number.
Note:
If required, the significance of this new alarm can be read about in a more recent description of the converter.

Remedy: - Replace the firmware on the power unit by an older firmware version.
- Upgrade the converter firmware.

Response upon: F: NONE

Acknowl. upon F: IMMEDIATELY

Response upon: N: NONE

Acknowl. upon N: NONE

F31110 (N, A) Motor encoder: Serial communication faulted

Message class: Position/speed actual value incorrect or not available (11)

Message value: Fault cause: %1 bin

Component: Encoder 1

Response: ENCODER

Acknowledgment: PULSE INHIBIT

Cause: There is an error in the transfer of the serial communication protocol between the encoder and internal or external evaluation module.
Fault value (r0949, interpret binary):
Bit 0: Alarm bit in the position protocol.
Bit 2: Encoder does not respond (does not supply a start bit within 50 ms).
Bit 3: CRC error: The checksum in the protocol from the encoder does not match the data.
Bit 6: Timeout when cyclically reading.
Bit 7: Timeout for the register communication.
Bit 14: Register communication error.

Remedy: For fault value, bit 0 = 1:
- Encoder defect F31111 may provide further details.
For fault value, bit 2 = 1:
- Incorrect encoder type / replace the encoder or encoder cable.
For fault value, bit 3 = 1:
- EMC / connect the cable shield, replace the encoder or encoder cable.
For fault value, bit 6 = 1:
- Update the firmware
For fault value, bit 7 = 1:
- Incorrect encoder type / replace the encoder or encoder cable.
For fault value, bit 14 = 1:
- Incorrect encoder type / replace the encoder or encoder cable.

Response upon: N: NONE
Acknowl. upon N: NONE
Response upon: A: NONE
Acknowl. upon A: NONE

F31111 (N, A) Motor encoder: Encoder signals an internal error (detailed information)

Message class: Position/speed actual value incorrect or not available (11)
Message value: Fault cause: %1 bin, additional information: %2
Component: Encoder 1
Response: ENCODER
Acknowledgment: PULSE INHIBIT
Cause: The encoder error word provides detailed information (error bit).
Fault value (r0949, interpret binary):
yyyyxxxx hex: yyyy = supplementary information, xxxx = fault cause
Bit 0: Error in the multiturn block.
Bit 1: EEPROM error.
Bit 2: Singleturn position incorrect.
Bit 3: Multiturn position incorrect.
Bit 4: MLS generation error.
Bit 5: Reserved.
Bit 6: Overtemperature.
Bit 7: Internal fault.
Remedy: Encoder is defective. Replace the encoder or motor.
Response upon: N: NONE
Acknowl. upon N: NONE
Response upon: A: NONE
Acknowl. upon A: NONE

F31112 (N, A) Motor encoder: Encoder signals an internal error

Message class: Position/speed actual value incorrect or not available (11)
Message value: %1
Component: Encoder 1
Response: ENCODER
Acknowledgment: PULSE INHIBIT
Cause: The encoder signals an internal error via serial protocol.
Fault value (r0949, interpret binary):
Bit 0: Fault bit in the position protocol.

Remedy: For fault value, bit 0 = 1:
In the case of an EnDat encoder, F31111 may provide further details.
Response upon: N: NONE
Acknowl. upon N: NONE
Response upon: A: NONE
Acknowl. upon A: NONE

F31150 (N, A) Motor encoder: Initialization error

Message class: Error in the parameterization / configuration / commissioning procedure (18)
Message value: %1
Component: Sensor Module Encoder 1
Response: ENCODER
Acknowledgment: PULSE INHIBIT
Cause: Encoder functionality selected in p0404 cannot be executed.
Fault value (r0949, interpret hexadecimal):
Encoder malfunction.
The bit assignment corresponds to that of p0404 (e.g. bit 5 set: Error track C/D).
See also: p0404 (Encoder configuration effective)
Remedy: - Check that p0404 is correctly set.
- Check the encoder type used (incremental/absolute) and for SMCxx, the encoder cable.
- If relevant, note additional fault messages that describe the fault in detail.
Response upon: N: NONE
Acknowl. upon N: NONE
Response upon: A: NONE
Acknowl. upon A: NONE

A31407 (F, N) Motor encoder: Function reserve low

Message class: Position/speed actual value incorrect or not available (11)
Message value: %1
Component: Encoder 1
Response: NONE
Acknowledgment: NONE
Cause: The encoder function reserve is too low.
Alarm value (r2124, interpret decimal):
1: Incremental signals
3: Absolute track
4: Code connection
Remedy: - For open measuring systems, clean the encoder.
- If required, replace the encoder.
Response upon: F: NONE
Acknowl. upon F: IMMEDIATELY
Response upon: N: NONE
Acknowl. upon N: NONE

A31410 (F, N) Motor encoder: Communication error (encoder and Sensor Module)

Message class: Position/speed actual value incorrect or not available (11)
Message value: Fault cause: %1 bin
Component: Encoder 1
Response: NONE

Acknowledgment: NONE

Cause: There is an error in the transfer of the serial communication protocol between the encoder and internal or external evaluation module.
Fault value (r0949, interpret binary):
Bit 0: Alarm bit in the position protocol.
Bit 2: Encoder does not respond (does not supply a start bit within 50 ms).
Bit 3: CRC error: The checksum in the protocol from the encoder does not match the data.
Bit 6: Timeout when cyclically reading.
Bit 7: Timeout for the register communication.
Bit 14: Register communication error.

Remedy:
- Check that the encoder cables are routed in compliance with EMC.
- Check the plug connections.
- Replace encoder.

Response upon: F: NONE

Acknowl. upon F: IMMEDIATELY

Response upon: N: NONE

Acknowl. upon N: NONE

A31411 (F, N) Motor encoder: Encoder signals an internal alarm (detailed information)

Message class: Position/speed actual value incorrect or not available (11)

Message value: Fault cause: %1 bin, additional information: %2

Component: Encoder 1

Response: NONE

Acknowledgment: NONE

Cause: The encoder error word provides detailed information (alarm bit).
Alarm value (r2124, interpret binary):
yyyyxxxx hex: yyyy = supplementary information, xxxx = fault cause
Bit 0: LED current incorrect.
Bit 1: Signal amplitude outside the control range.
Bit 2: Overtemperature.

Remedy: Replace encoder.

Response upon: F: NONE

Acknowl. upon F: IMMEDIATELY

Response upon: N: NONE

Acknowl. upon N: NONE

A31412 (F, N) Motor encoder: Encoder signals an internal alarm

Message class: Position/speed actual value incorrect or not available (11)

Message value: %1

Component: Encoder 1

Response: NONE

Acknowledgment: NONE

Cause: The encoder signals an internal alarm via serial protocol.
Alarm value (r2124, interpret binary):
Bit 0: Fault bit in the position protocol.
Bit 1: Alarm bit in the position protocol.

Remedy:
- Carry out a POWER ON (switch-off/switch-on) for all components.
- Check that the encoder cables are routed in compliance with EMC.
- Check the plug connections.
- Replace encoder.

Response upon: F: NONE
Acknowl. upon F: IMMEDIATELY
Response upon: N: NONE
Acknowl. upon N: NONE

F31503 (N, A) Motor encoder: Position tracking cannot be reset

Message class: Position/speed actual value incorrect or not available (11)
Message value: -
Component: None
Response: OFF1
Acknowledgment: IMMEDIATELY
Cause: The position tracking for the measuring gearbox cannot be reset.
Remedy: The fault should be resolved as follows:
- Select commissioning.
- Deselect commissioning.
The fault should then be acknowledged and the absolute encoder adjusted.
Response upon: N: NONE
Acknowl. upon N: NONE
Response upon: A: NONE
Acknowl. upon A: NONE

F31802 (N, A) Motor encoder: Time slice overflow

Message class: Hardware/software error (1)
Message value: %1
Component: Sensor Module Encoder 1
Response: ENCODER
Acknowledgment: IMMEDIATELY
Cause: A time slice overflow for the motor encoder has occurred.
Fault value (r0949, interpret hexadecimal):
yx hex:
y = function involved (only relevant for internal fault diagnostics.),
x = time slice involved
x = 9:
Time slice overflow of the fast (current controller clock cycle) time slice.
x = A:
Time slice overflow of the average time slice.
x = C:
Time slice overflow of the slow time slice.
yx = 3E7:
Timeout when waiting for SYNO (e.g. unexpected return to non-cyclic operation).
Remedy: Increase the current controller sampling time
Note:
For a current controller sampling time = 31.25 µs, use an SMx20 with Article No. 6SL3055-0AA00-5xA3.
Response upon: N: NONE
Acknowl. upon N: NONE
Response upon: A: NONE
Acknowl. upon A: NONE

F31804 (N, A) Motor encoder: Sensor Module checksum error

Message class: Hardware/software error (1)

Message value: %1
Component: Sensor Module Encoder 1
Response: ENCODER
Acknowledgment: POWER ON
Cause: A checksum error has occurred when reading-out the program memory on the Sensor Module.
Fault value (r0949, interpret hexadecimal):
yyyyxxxx hex
yyyy: Memory area involved.
xxxx: Difference between the checksum at POWER ON and the actual checksum.
Remedy: - Carry out a POWER ON (switch-off/switch-on).
- Upgrade firmware to later version.
- Check whether the permissible ambient temperature for the component is being maintained.
Response upon: N: NONE
Acknowl. upon N: NONE
Response upon: A: NONE
Acknowl. upon A: NONE

F31805 (N, A) Motor encoder: EEPROM checksum error

Message class: Hardware/software error (1)
Message value: %1
Component: Sensor Module Encoder 1
Response: ENCODER
Acknowledgment: IMMEDIATELY
Cause: Data in the EEPROM corrupted .
Fault value (r0949, interpret hexadecimal):
01: EEPROM access error.
02: Too many blocks in the EEPROM.
Remedy: Replace the module.
Response upon: N: NONE
Acknowl. upon N: NONE
Response upon: A: NONE
Acknowl. upon A: NONE

F31850 (N, A) Motor encoder: Encoder evaluation internal software error

Message class: Hardware/software error (1)
Message value: %1
Component: Sensor Module Encoder 1
Response: ENCODER
Acknowledgment: POWER ON
Cause: An internal software error has occurred in the Sensor Module of the motor encoder.
Fault value (r0949, interpret decimal):
1: Background time slice is blocked.
2: Checksum over the code memory is not correct.
10000: OEM memory of the EnDat encoder contains data that cannot be interpreted.
11000 ... 11499: Description data from EEPROM incorrect.
11500 ... 11899: Calibration data from EEPROM incorrect.
11900 ... 11999: Configuration data from EEPROM incorrect.
12000 ... 12008: Communications error with analog/digital converter.
Remedy: - If required, upgrade the firmware.
- Contact Technical Support.

Response upon: N: NONE
Acknowl. upon N: NONE
Response upon: A: NONE
Acknowl. upon A: NONE

F31899 (N, A) Motor encoder: Unknown fault

Message class: Position/speed actual value incorrect or not available (11)
Message value: New message: %1
Component: Sensor Module Encoder 1
Response: ENCODER
Acknowledgment: IMMEDIATELY
Cause: A fault has occurred on the Sensor Module for the motor encoder, which cannot be interpreted by the converter firmware.
This can occur if the firmware on this component is more recent than the converter firmware.
Fault value (r0949, interpret decimal):
Fault number.
Note:
If required, the significance of this new fault can be read about in a more recent description.
Remedy: - Replace the firmware on the Sensor Module by an older firmware version.
- Upgrade the converter firmware
Response upon: N: NONE
Acknowl. upon N: NONE
Response upon: A: NONE
Acknowl. upon A: NONE

A31902 (F, N) Motor encoder: SPI-BUS error occurred

Message class: Hardware/software error (1)
Message value: %1
Component: Sensor Module Encoder 1
Response: NONE
Acknowledgment: NONE
Cause: Error when operating the internal SPI bus.
Alarm value (r2124, interpret hexadecimal):
Only relevant for internal fault diagnostics.
Remedy: - Replace motor.
- Contact Technical Support.
Response upon: F: NONE
Acknowl. upon F: IMMEDIATELY
Response upon: N: NONE
Acknowl. upon N: NONE

A31903 (F, N) Motor encoder: I2C-BUS error occurred

Message class: Hardware/software error (1)
Message value: %1
Component: Sensor Module Encoder 1
Response: NONE
Acknowledgment: NONE

Cause: Error when operating the internal I2C bus.
Alarm value (r2124, interpret hexadecimal):
Only relevant for internal fault diagnostics.

Remedy: - Replace motor.
- Contact Technical Support.

Response upon: F: NONE
Acknowl. upon F: IMMEDIATELY
Response upon: N: NONE
Acknowl. upon N: NONE

F31905 (N, A) Motor encoder: Encoder parameterization error

Message class: Error in the parameterization / configuration / commissioning procedure (18)
Message value: Parameter: %1, supplementary information: %2
Component: Sensor Module Encoder 1
Response: ENCODER
Acknowledgment: IMMEDIATELY
Cause: An error was identified in the encoder parameterization.
It is possible that the parameterized encoder type does not match the connected encoder.
Determine the parameter number using the fault value (r0949).

Fault value (r0949, interpret decimal):
yyyyxxxx dec: yyyy = supplementary information, xxxx = parameter
yyyy = 0:
No additional information available.
yyyy = 10:
The connected encoder is not supported.

Remedy: - Check whether the connected encoder type matches the encoder that has been parameterized.
- Correct the parameter specified by the fault value (r0949).

Response upon: N: NONE
Acknowl. upon N: NONE
Response upon: A: NONE
Acknowl. upon A: NONE

F31950 Motor encoder: Internal software error

Message class: Hardware/software error (1)
Message value: %1
Component: Sensor Module Encoder 1
Response: ENCODER
Acknowledgment: POWER ON
Cause: An internal software error has occurred.
Fault value (r0949, interpret decimal):
The fault value contains information regarding the fault source.
Only relevant for internal fault diagnostics.

Remedy: - If necessary, upgrade the firmware in the Sensor Module to a later version.
- Contact Technical Support.

A31999 (F, N) Motor encoder: Unknown alarm

Message class: Position/speed actual value incorrect or not available (11)
Message value: New message: %1
Component: Sensor Module Encoder 1

Response: NONE
Acknowledgment: NONE
Cause: An alarm has occurred on the Sensor Module for encoder 1, which cannot be interpreted by the converter firmware.
This can occur if the firmware on this component is more recent than the converter firmware.
Alarm value (r2124, interpret decimal):
Alarm number.
Note:
If required, the significance of this new alarm can be read about in a more recent description of the converter.
Remedy: - Replace the firmware on the Sensor Module by an older firmware version.
- Upgrade the converter firmware.
Response upon: F: NONE
Acknowl. upon F: IMMEDIATELY
Response upon: N: NONE
Acknowl. upon N: NONE

F32805 (N, A) Encoder 2: EEPROM checksum error

Message class: Hardware/software error (1)
Message value: %1
Component: Sensor Module Encoder 2
Response: OFF1
Acknowledgment: IMMEDIATELY
Cause: Data in the EEPROM corrupted .
Fault value (r0949, interpret hexadecimal):
01: EEPROM access error.
02: Too many blocks in the EEPROM.
Remedy: Replace the module.
Response upon: N: NONE
Acknowl. upon N: NONE
Response upon: A: NONE
Acknowl. upon A: NONE

F32950 Encoder 2: Internal software error

Message class: Hardware/software error (1)
Message value: %1
Component: Sensor Module Encoder 2
Response: OFF1
Acknowledgment: POWER ON
Cause: An internal software error has occurred.
Fault value (r0949, interpret decimal):
Information about the fault source.
Only relevant for internal fault diagnostics.
Remedy: - If necessary, upgrade the firmware in the Sensor Module to a later version.
- Contact Technical Support.

F34950 VSM: Internal software error

Message class: Hardware/software error (1)
Message value: %1
Component: Voltage Sensing Module (VSM)

Response: OFF2
Acknowledgment: POWER ON
Cause: An internal software error in the Voltage Sensing Module (VSM) has occurred.
Fault value (r0949, interpret decimal):
Information about the fault source.
Only for internal Siemens troubleshooting.
Remedy: - If necessary, upgrade the firmware in the Voltage Sensing Module to a later version.
- Contact Technical Support.

F35220 (N, A) PTO: Frequency limit reached for signal output

Message class: Application/technological function faulted (17)
Message value: %1
Component: Terminal Module (TM)
Response: OFF1
Acknowledgment: IMMEDIATELY
Cause: The signals output from the PTO for tracks A/B have reached the limit frequency. The output signals are no longer in synchronism with the specified setpoint.
The signal at c4420 has an excessively high actual speed.
Remedy: - Enter a lower speed setpoint (c4420).
- Reduce the pulse number (p4408).
Response upon: N: NONE
Acknowl. upon N: NONE
Response upon: A: NONE
Acknowl. upon A: NONE

F35950 TM: Internal software error

Message class: Hardware/software error (1)
Message value: %1
Component: Terminal Module (TM)
Response: OFF2
Acknowledgment: POWER ON
Cause: An internal software error has occurred.
Fault value (r0949, interpret decimal):
Information about the fault source.
Only for internal Siemens troubleshooting.
Remedy: - If necessary, upgrade the firmware in the Terminal Module to a later version.
- Contact Technical Support.

F48604 SI: Safety EEPROM data error

Message class: Safety monitoring channel has identified an error (10)
Message value: %1
Variant: S200 PTI
Component: Power Unit
Response: OFF2
Acknowledgment: POWER ON
Cause: Safety relevant EEPROM data are not correct.
This message results in an STO (Safe Torque Off).

Message value (r60049, interpret decimal): Only for internal Siemens fault diagnostics.

Remedy: Replace the module

A48605 SI: Checksum error has occurred

Message class: Safety monitoring channel has identified an error (10)
Message value: %1
Variant: S200 PTI
Component: None
Response: NONE
Acknowledgment: NONE
Cause: A checksum error (CRC error) has occurred in the converter program memory.
Remedy:
- Carry out a POWER ON (switch-off/switch-on).
- Upgrade firmware to later version.
- Contact Technical Support.

F48606 SI: Safety HW version incorrect

Message class: Safety monitoring channel has identified an error (10)
Message value: %1
Variant: S200 PTI
Component: Control Unit (CU)
Response: OFF2
Acknowledgment: POWER ON
Cause: Safety relevant hardware version is not compatible with this software.
This fault results in an STO (Safe Torque Off).

Fault value (r0949, interpret decimal): Only for internal Siemens fault diagnostics.
Remedy: Update the software or exchange the module for this software.

C48649 SI: Internal software error

Message class: Hardware/software error (1)
Message value: Module: %1, line: %2
Variant: S200 PTI
Component: Power Unit
Response: OFF2
Acknowledgment: IMMEDIATELY
Cause: An internal error has occurred in the Safety Integrated software.
Note:
This message results in an STO (Safe Torque Off) that cannot be acknowledged.
Message value (r60049, interpret hexadecimal):
Only for internal Siemens troubleshooting.
Remedy:
- Carry out a POWER ON (switch-off/switch-on) for all components.
- Repeat commissioning of "Safety Integrated" and carry out a POWER ON.
- Upgrade firmware to later version.
- Contact Technical Support.
- Replace hardware component.

A52902 Emergency stop (EMGS) signal missing

Message class: General drive fault (19)
Message value: -
Component: Control Unit (CU)

Response: NONE
Acknowledgment: NONE
Cause: Before enabling the SON signal, the emergency stop (EMGS) signal wasn't enabled.
Remedy: Enable the emergency stop (EMGS) signal first and then the SON signal.

F52940 (A) FPC: Following error too high

Message class: Application/technological function faulted (17)
Message value: -
Component: None
Response: OFF1
Acknowledgment: IMMEDIATELY
Cause: The difference between the position setpoint and actual value (r29187) was greater than the tolerance (p29294).
- The drive torque or accelerating capacity exceeded.
- Command input via PTI changed too fast.

Remedy:
- Check the causes and resolve.
- Change the tolerance (p29294).

Response upon: A: NONE
Acknowl. upon A: NONE

F52960 (A) Negative hardware limit switch reached

Message class: General drive fault (19)
Message value: -
Component: Control Unit (CU)
Response: OFF3
Acknowledgment: IMMEDIATELY
Cause: A 0 signal was detected at binector input, i.e. the negative hardware limit switch was actuated.
For a negative traversing direction, the negative hardware limit switch was reached - i.e. the wiring of the hardware limit switch is incorrect.
Remedy: -Acknowledge the fault.
Response upon: A: NONE
Acknowl. upon A: NONE

F52961 (A) Positive hardware limit switch reached

Message class: General drive fault (19)
Message value: -
Component: Control Unit (CU)
Response: OFF3
Acknowledgment: IMMEDIATELY
Cause: A 0 signal was detected at binector input, i.e. the positive hardware limit switch was actuated.
For a positive traversing direction, the positive hardware limit switch was reached - i.e. the wiring of the hardware limit switch is incorrect.
Remedy: -Acknowledge the fault.
Response upon: A: NONE
Acknowl. upon A: NONE

A52962 (F) Negative hardware limit switch reached

Message class: General drive fault (19)
Message value: -

Component: Control Unit (CU)
Response: NONE
Acknowledgment: NONE
Cause: A 0 signal was detected at binector input, i.e. the negative hardware limit switch was actuated.
For a negative traversing direction, the negative hardware limit switch was reached - i.e. the wiring of the hardware limit switch is incorrect.
Remedy:
Response upon: F: OFF3
Acknowl. upon F: IMMEDIATELY

A52963 (F) Positive hardware limit switch reached

Message class: General drive fault (19)
Message value: -
Component: Control Unit (CU)
Response: NONE
Acknowledgment: NONE
Cause: A 0 signal was detected at binector input, i.e. the positive hardware limit switch was actuated.
For a positive traversing direction, the positive hardware limit switch was reached - i.e. the wiring of the hardware limit switch is incorrect.
Remedy:
Response upon: F: OFF3
Acknowl. upon F: IMMEDIATELY

Corrective maintenance 12

12.1 Service and maintenance for the converter

12.1.1 Restoring the converter to factory settings

12.1.1.1 Restoring factory settings via a commissioning tool

Requirement

When User Management & Access Control (UMAC) is active, you have the right that allows you to edit device configuration or drive application.

Description

The restoring to factory settings with a commissioning tool (web server) only deletes the user-specific parameterization of the converter, for example motor data.

The following settings are retained with the restoring:

- Activation and settings of User Management & Access Control
- The "IP configuration" and "Device name" communication settings of the service interface (X127)
- Installed firmware on the converter

The restoring to factory settings with the commissioning tool is described in Section "Backup and restore (Page 217)".

12.1.1.2 Full reset of all device settings

Overview

The following user-defined settings are stored in the converter:

- Parameterization of the converter
- Activation and settings of User Management & Access Control
- "IP configuration" and "Device name" communication settings of the service interface (X127)
- Self-generated certificates
- User-defined parameter lists in the web server

In the following cases it may be necessary to reset all user-defined converter settings to the factory setting:

- The available credentials do not allow the necessary configuration of the converter (no password for example).
- Before recommissioning of the converter, for example if the application use of the converter changes.
- Before the converter is sold or disposed of, in order to erase all user-defined settings.

Requirement

The following preconditions apply when completely resetting all device settings:

- You can access the converter manually.
- All electrical connections from the converter to the motor are disconnected.
- You have an empty writable memory card with a maximum of 32 GB; e.g. 6SL5970-0AA00-0AA0.

Procedure

Proceed as follows to perform a full reset of all device settings of the converter:

1. Create an empty file called RESET.TXT in the root directory of the memory card.
   When you write text KEEP_COMM to file RESET.TXT, then the settings for the communications interfaces are kept after the reset.
2. Switch off all power supplies to the converter.
3. Wait until all the LEDs on the converter are dark.
4. Insert the memory card into the converter.
5. Switch on all power supplies to the converter.
6. The converter deletes the user-defined settings.
7. The user-defined settings are deleted.

RDY	COM	Description
		Factory settings are being restored.
	□	Factory settings have been restored.
□		Restoring factory settings is unsuccessful.

8. Remove the memory card.
9. Switch off all power supplies to the converter.

Result

The result depends on the content of file RESET.TXT:

File RESET.TXT is empty	File RESET.TXT contains text KEEP_COMM
All user-defined converter settings are deleted. The converter firmware is unchanged. After the manual reset to the factory setting, access to the web server is possible via the service interface (X127). For access via the service interface (X127), use the secure transmission protocol HTTPS.	The converter firmware is unchanged. The setting of the communication interfaces, e.g. the setting of service interface (X127), is unchanged. All other user-defined converter settings are deleted.

12.1.1.3 Restore Safety Integrated to factory settings

Overview

A separate function exists for Safety Integrated settings, which exclusively restores Safety Integrated settings to factory settings.

Requirement

You have the rights required for active user management (UMAC):

- Edit device configuration or drive applications
- Edit Safety Integrated application

Procedure

Proceed as follows to reset the converter Safety Integrated settings to the factory settings:

1. Call the "Backup and restore" menu.
2. Click on the "Reset Safety Integrated" button.
3. Acknowledge the confirmation prompt.
4. Wait: the converter resets its Safety Integrated settings.
5. Wait: the converter restarts.
6. The converter is in the "Ready" state and the "RDY" and "COM" LEDs are green.

Result

The Safety Integrated settings for the converter have been reset.

12.1.2 Converter firmware update

12.1.2.1 Overview of firmware update

Requirement

NOTICE
Damage to equipment during firmware update due to voltage supply interruption When the firmware is being updated, interrupting the power supply or disconnecting the motor can result in defects or cause the devices to malfunction. • Do not switch off the converter's supply voltage during firmware update.

Description of function

Firmware updates change the settings in the converter according to the relative firmware version:

- If the converter is upgraded to a more recent firmware version, the converter settings are retained.
- Downgrading to an older firmware resets all user-defined settings to factory settings, including:
  - Parameterization of the converter
  - Activation and settings of User Management & Access Control
  - "IP configuration" and "Device name" communication settings of the service interface (X127)
  - Self-generated certificates
  - User-defined parameter lists in the web server

The following options are available for a firmware update:

- Firmware update via a memory card (Page 534)
- Firmware update via web server (Page 226)

12.1.2.2 Firmware update via a memory card

Overview

The converter firmware can also be updated using a memory card.

Requirement

You have performed a BIOS update if a BIOS update is required for the firmware update.

We recommend that you use an empty Siemens memory card for the firmware update.

NOTICE
Damage to equipment during firmware update due to voltage failure A voltage failure during a firmware update can lead to defects or malfunctions of the converter. • Do not switch off the converter power supply during a firmware update. • If the power supply was interrupted during a firmware update, restart the firmware update.

Procedure

Proceed as follows to update the firmware using a memory card:

1. Download the required firmware to your PC from the Internet.
   Alternatively, the firmware can be ordered on a memory card.
2. Extract the files to a directory of your choice on your PC.
3. Copy the unzipped files to the root nodes of an empty memory card.

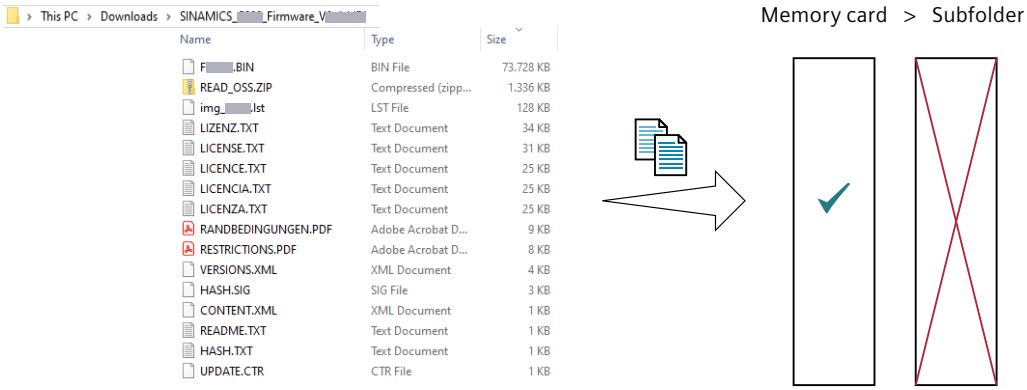

Figure 12-1 Copy the files for the firmware update to the root nodes of the memory card

4. Switch off the converter supply voltage.
5. Insert the memory card with the downloaded firmware into the converter.
6. Switch on the converter supply voltage.
7. The new firmware is installed. The procedure takes a few minutes.

RDY	COM	Explanation of LED displays
		The firmware is being updated. Do not switch off the converter supply voltage.
	-	Firmware update completed

8. Switch off the converter supply voltage.
9. Remove the memory card.
10. Switch on the converter supply voltage.

Result

The converter firmware has been updated.

The commissioning tool displays the firmware version of the converter.

More information

A BIOS update may be required for a firmware update. If a BIOS update is also required for a firmware update, you will find the BIOS update next to the firmware update on the same website.

For more information about the firmware versions, see Section "Firmware updates and constraints (Page 21)".

12.1.2.3 BIOS update via a memory card

Overview

A BIOS update of the converter is only possible with a memory card.

Requirement

We recommend that you use an empty Siemens memory card for the BIOS update.

NOTICE
Damage to equipment during BIOS update due to voltage failure A voltage failure during a BIOS update can lead to defects or malfunctions of the converter. • Do not switch off the converter power supply during a BIOS update. • If the power supply was interrupted during a BIOS update, restart the BIOS update.

Procedure

Proceed as follows to update the BIOS using a memory card:

1. Download the required BIOS to your PC from the Internet.
2. Extract the files to a directory of your choice on your PC.

3. Copy the unzipped files to the root nodes of an empty memory card.

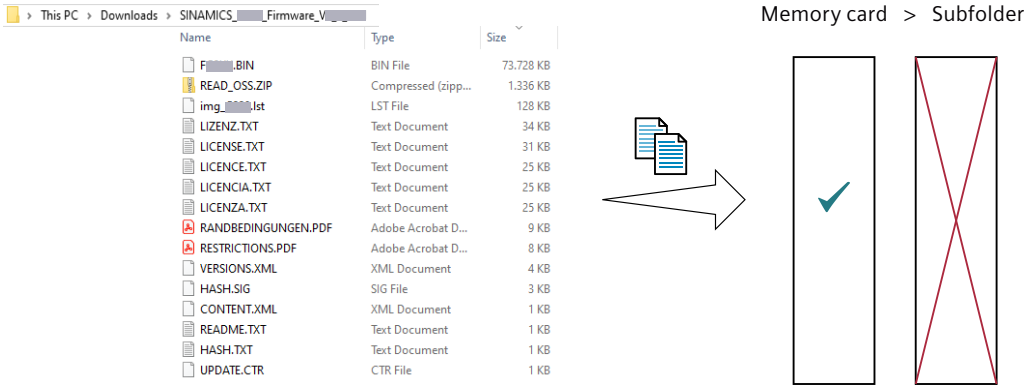

Figure 12-2 Copy the files for the BIOS update to the root nodes of the memory card

4. Switch off the converter supply voltage.
5. Insert the memory card into the converter.
6. Switch on the converter supply voltage.
7. The new BIOS is installed. The procedure takes several seconds.

RDY	COM	Explanation of LED displays
		BIOS is being updated. Do not switch off the converter supply voltage.
	-	BIOS update completed

8. Switch off the converter supply voltage.
9. Remove the memory card.
10. Switch on the converter supply voltage.

Result

The converter BIOS has been updated.

More information

The BIOS of the converter is backwards compatible with the firmware. Therefore, no BIOS update is required after a firmware update from a newer to an older firmware version.

For more information about BIOS update, see Section "Firmware updates and constraints (Page 21)".

12.1.3 Backing up and restoring drive data

12.1.3.1 Automatically backing up drive data using a memory card and restoring this data

Overview

An inserted memory card backs up all drive data and in the case of service, after a converter has been replaced, guarantees that the system or machine is immediately ready for operation again.

Description of function

The drive backs up changed drive data both in its internal memory as well as on the inserted memory card.

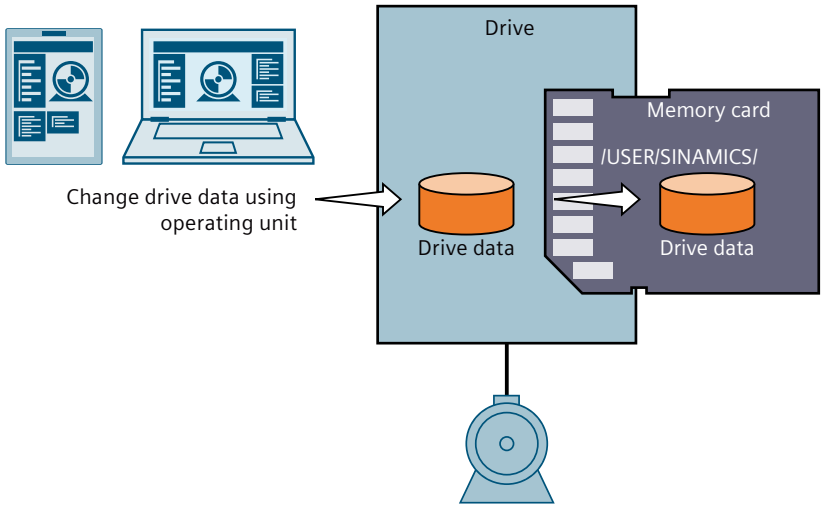

Figure 12-3 Drive data backed up on the memory card

The drive data comprises the following components:

- Changed parameters
- UMAC settings

The drive data is on the memory card in directory /USER/SINAMICS/.

After inserting an empty memory card for the first time, the drive creates directory /USER/SINAMICS/.

After the supply voltage has been switched on, the drive loads the drive data from the memory card into its internal memory.

Automatically loading the drive data from the memory card allows a converter to be replaced without using an operating unit.

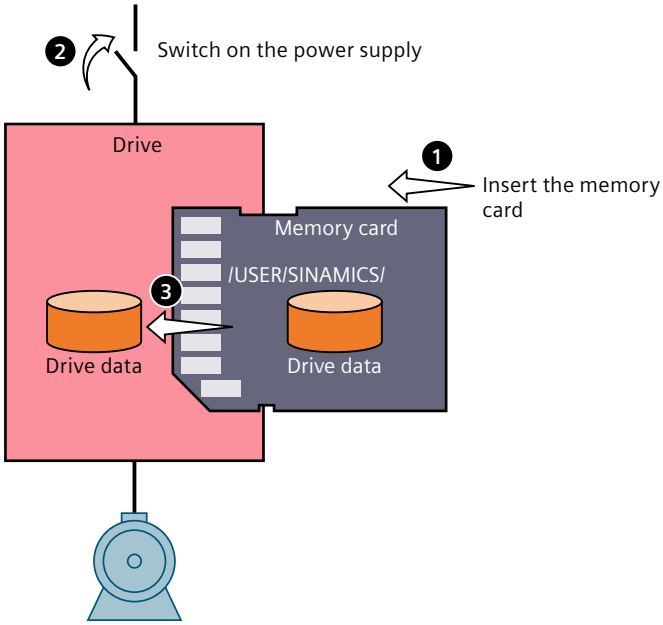

Figure 12-4 Automatically loading drive data from a memory card after a converter has been replaced

12.1.3.2 Backing up drive data to the backup file

Overview

A backup file backs up the drive data and allows the drive data to be restored if service is required. A backup file can be created by loading from the drive.

Requirement

You are connected online with the drive using a commissioning tool.

Procedure

Load backup file online via web server from the drive:

Using function "Backup/restore" → "Save drive data to backup file", back up the drive data in a backup file on the operator panel, e.g. on a PC.

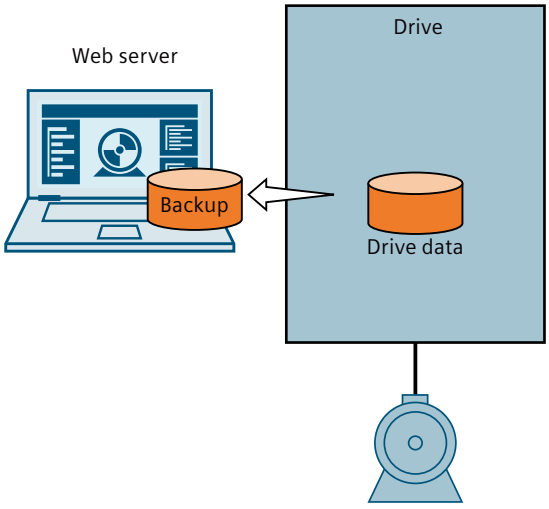

Figure 12-5 Creating a backup file online

Result

The backup file contains the following drive data:

- Changed parameters
- UMAC settings

12.1.3.3 Saving backup file to memory card

Overview

A memory card with backup file allows drive data to be automatically restored after the card is inserted into the drive. The backup file can be saved to the memory card.

Requirement

Requirements:

- A memory card is inserted in the card reader of your PC.
- You already have the backup file of your drive.

Procedure

The backup file can be received by email, stored in a cloud or locally.

Create directory /BACKUPFILE_NEXT_START/ on the memory card and copy the backup file to this directory.

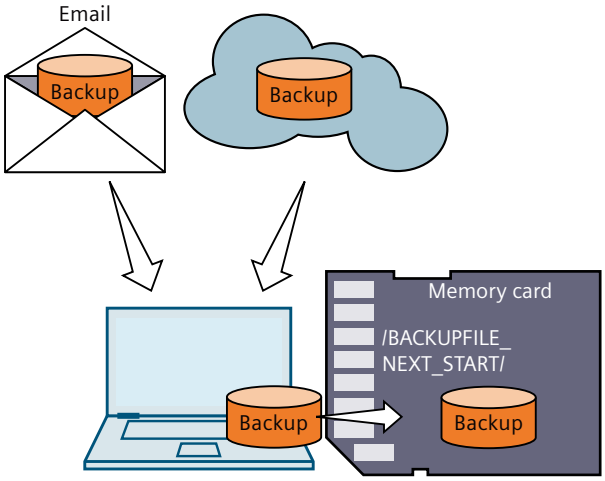

Figure 12-6 Saving the backup file to the memory card

Result

The memory card contains the backup file with the following drive data:

- Changed parameters
- UMAC settings

12.1.3.4 Restoring drive data from a backup file

Overview

A backup file backs up the drive data and allows the drive data to be restored if service is required. The drive data can be restored online using a commissioning tool or via a memory card.

Requirement

You have either configured the drive or you already have the backup file of your drive.

Procedure

Note

If you want to restore the drive data from a backup file of an old converter with FW V6.3 to a new converter with FW ≥ V6.4, you must first full reset the settings of the new converter with an empty memory card, and then restore the drive data according to the procedures below.

The following options are available to restore the drive data from a backup file:

- Restoring drive data online using a web server:
  Using function "Backup/restore" → "Restore drive data from backup file", transfer the backup file from an operating unit to the drive. The drive accepts the content of the backup file into the drive data on its internal memory.

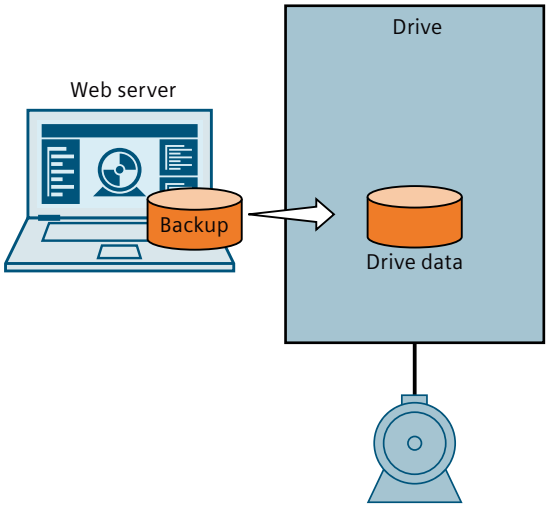

Figure 12-7 Restore drive data from a backup file online

- Restoring drive data using a memory card:
  After the supply voltage has been switched on, the drive accepts the drive data from a backup file into its internal memory.

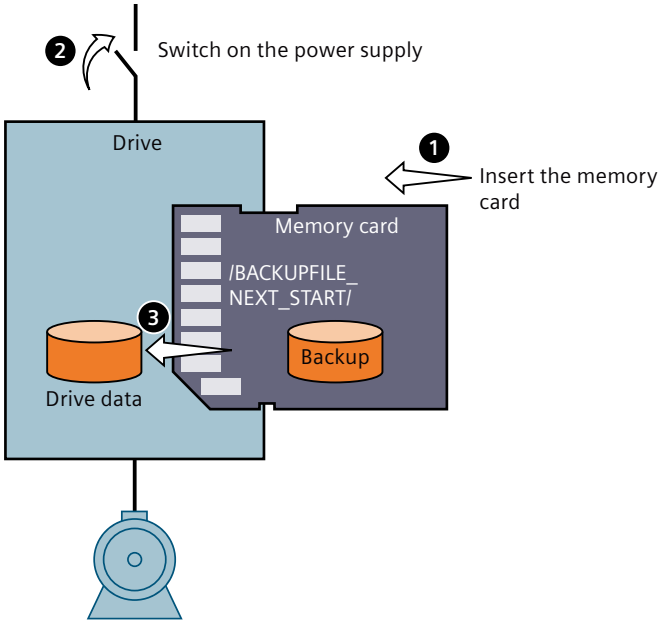

Figure 12-8 Restoring drive data using a backup file on a memory card

After accepting the drive data:

– The drive deletes the backup file and directory /BACKUPFILE_NEXT_START/

– The drive backs up the drive data from the memory card in directory /USER/SINAMICS/

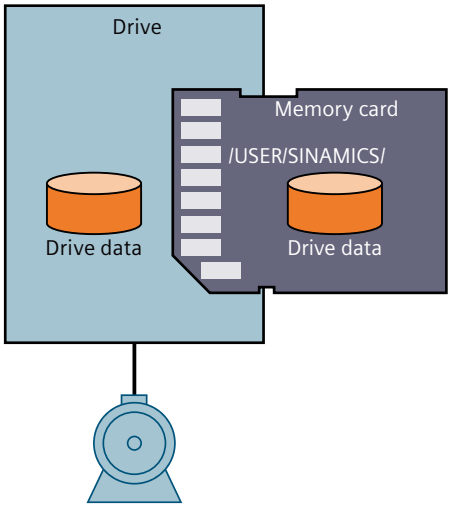

Figure 12-9 Memory card after restoring the drive data

Result

The LEDs signal the drive status:

RDY	COM	Explanation
	not relevant	The drive has accepted the following drive data from the backup file into its internal memory: • Changed parameters • UMAC settings
		The drive signals a fault. Check the cause of the fault.

12.1.3.5 Backup file with drive data encryption

Overview

Restoring drive data from a backup file with encrypted data is only possible if you know the backup password.

Requirement

Required runtime authorizations with active user management (UMAC):

- "Create backup or load drive data to Startdrive"
- If the backup file contains Safety Integrated Functions settings:
  "Edit Safety Integrated application"

Description of function

Procedures vary depending on which of the following drive data encryption scenarios applies:

Encryption	Password to be entered to restore the drive data	Result
The backup file is unencrypted. The drive data is encrypted. 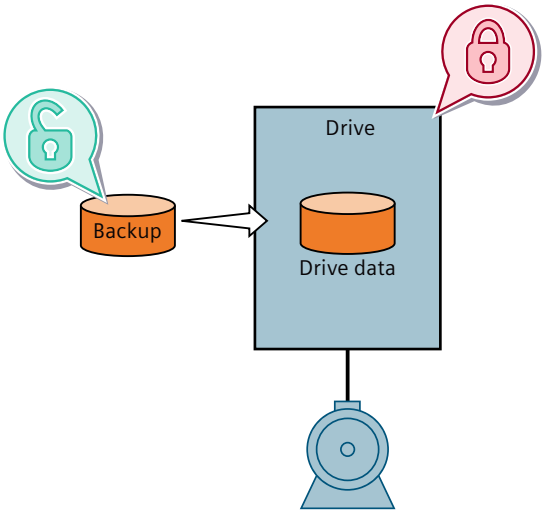 	None	The drive data is restored from the backup file data. The drive password is retained after the drive data has been restored.
The backup file is encrypted. The drive data is unencrypted. 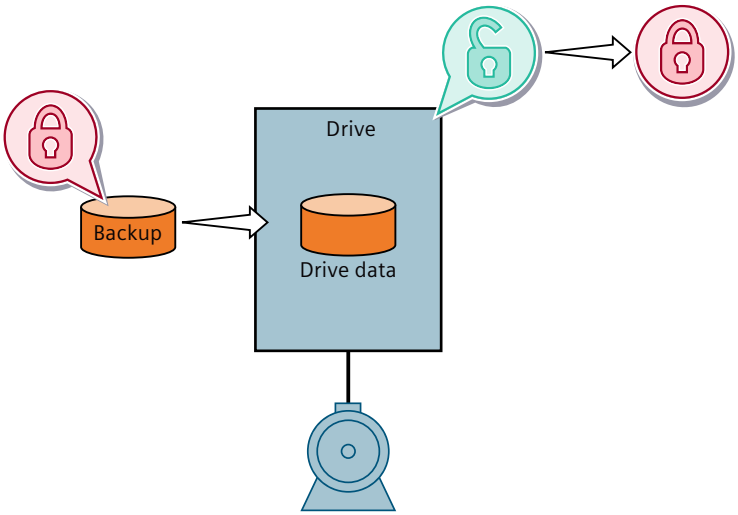 	Backup password	The drive data is restored from the backup file data. The drive data is encrypted. The drive handles the backup file password.

Encryption	Password to be entered to restore the drive data	Result
The backup file and the drive data are encrypted. The backup password and the drive password are different, or the backup file was created with a different drive. 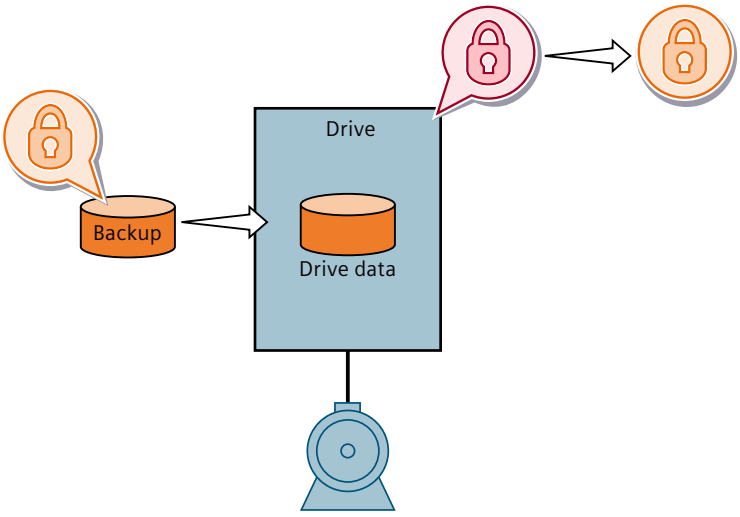 	Backup password	The drive data is restored from the backup file data. The drive data remains encrypted. The drive handles the backup file password.

12.1.4 Replacing the converter

Overview

You may only replace a converter with another converter if certain requirements are adhered to.

Requirement

The following requirements apply to a replacement:

- The new converter has the same or more recent firmware version than that of the converter being replaced.
- The two converters must also satisfy one of the following conditions:
  - The new and replaced converters have the same article number.
  - The new converter has a different article number to the converter it replaced but the same frame size.
    In this case, the ratio of the rated motor power to the rated converter power must be within the following range: 0.25 ... 1.

WARNING

Fire or electric shock after tripping of overcurrent protection devices

If an overcurrent protection device is tripped, the converter may be defective. A defective converter can cause a fire or electric shock.

- Have the converter and the overcurrent protection device checked by a specialist.

WARNING

Electric shock as a result of a residual charge in power components

After the power supply has been switched off, it takes up to five minutes for the capacitors in the converter to discharge enough that the residual charge is safe.

- Check the voltage at the converter connections before removing the connecting cables.

WARNING

Unexpected machine movement caused by incorrect converter type

If a replacement is made with a converter of a different type, this can result in incomplete or unsuitable converter settings. This can result in unexpected machine movements, e.g. speed oscillation, overspeed or incorrect direction of rotation. Unexpected machine movements can result in death, injury or property damage.

- In all cases not permitted according to the above requirements, you must recommission the drive after replacing the converter.

WARNING

Unexpected machine movement caused by unsuitable converter settings

Missing or unsuitable converter settings can lead to unexpected operating states or machine movements, e.g. a non-functioning EMERGENCY STOP or an incorrect direction of rotation. This can result in damage to machine components or system sections or in death or bodily injury.

- Back up the settings of the converter to be replaced by uploading them to an external storage medium, e.g. a memory card.
- Transfer the settings of the converter to be replaced by downloading them to the new converter.
- If you do not have a backup of the converter settings, recommission the new converter.
- Check the new converter for proper functioning.

NOTICE

Damage caused by interchanging the motor cables

The direction in which the motor rotates switches if the two phases of the motor cable are interchanged. An incorrect direction of rotation can lead to damage in the machine or system.

- Connect the three phases of the motor cables in the correct sequence.

Procedure

Proceed as follows to replace a converter:

1. Disconnect all the power supplies to the converter.
2. Remove all the connecting cables to the converter.
3. Remove the defective converter.
4. Install the new converter.
5. Connect all the connecting cables to the converter.
6. Switch on all the power supplies to the converter.
7. Set the new converter to suit the application:
   – You have backed up the settings of the converter that was replaced to an external storage medium, e.g. a memory card:
   If the new converter has the same article number as the converter replaced, transfer the settings to the new converter.
   – If there is no backup of the data for the converter replaced or if the new converter has a different article number, commission the converter as a new converter.

12.1.5 Forming the DC link capacitors

Overview

If the converter has been out of operation for too long, you must form the DC link capacitors before connecting the full line voltage to the converter. Non-formed DC link capacitors can damage the converter in operation.

Forming can be omitted if the line voltage is applied to the converter once a year for one hour.

Requirement

Form the DC link capacitors in the following cases:

- The converter has been out of operation for more than one year.
- It has been more than one year since converter production when the converter is commissioned for the first time.
  The production date of the converter is coded in the 3rd and 4th digits of the serial number on the rating plate: S . . ③④...
  Example: Serial number S ZV**F1**Y54000105 → Production date January 2015

Table 12-1 Production year and production month

Digit ③	Production year	Digit ④	Production month
A	2010, 2030	1 ... 9	January ... September
B	2011, 2031	0	October

Digit ③	Production year	Digit ④	Production month
C	2012, 2032	N	November
...	...	D	December

Procedure

You form the DC link capacitors by supplying the converter with an input voltage of ≤ 100% of the rated voltage for a defined time. The figure below shows the voltage and duration required for the forming process. For example, if the converter has been out of operation for one to two years, form the DC link capacitors by supplying the converter with an input voltage of 100% of the rated voltage for one hour.

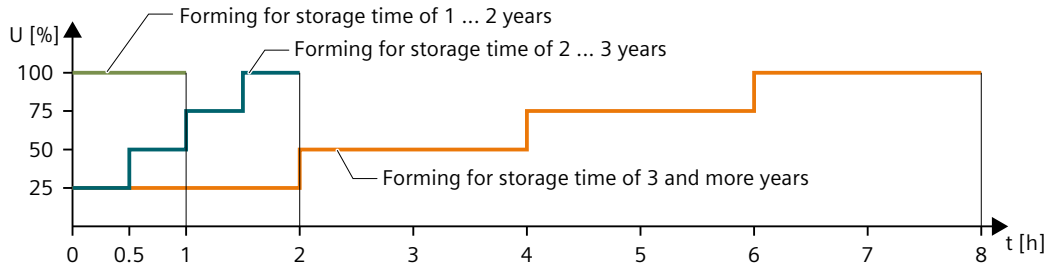

Figure 12-10 Forming the DC link capacitors

12.2 Service and maintenance for the motor

Requirement

WARNING

Risk of injury if protective devices are removed.

Operation without functioning protective devices can cause death or severe injury.

- Operate the motor, even in test operation, only with functioning protective devices.

Procedure

If there are deviations from normal operation or if faults occur, proceed as follows.

1. Identify the fault using the following table.
   You should also take account of the messages of the converter.

Fault	Fault cause														
Motor does not start	A	B													
Motor starts slowly	A		C		F										
Humming sound when starting			C		F										
Humming sound in operation	A		C		F										
High temperature rise under no-load operation				D		I									
High temperature rise under load	A		C			I									
High temperature rise of individual winding sections					F										
Uneven running							J	K							
Grinding sound, running noise									L						
Radial vibrations										M	N	O	P		R
Axial vibrations												O		Q	R

2. Rectify the fault using the following table.

No.	Fault cause	Remedial measures
A	Overload	Reduce load
B	Interrupted phase in the converter line supply cable or motor winding	Check the converter and converter line supply cable, measure the winding resistance and insulation resistance, repair after consultation with manufacturer
C	Interrupted phase in the converter line supply cable after switching on	Check the converter, converter line supply cable, and the winding resistance
D	Converter output voltage too high, frequency too low	Check the settings on the converter, perform automatic motor identification
F	Winding short-circuit or phase short-circuit in stator winding	Measure the winding resistances and insulation resistances, repair after consultation with the manufacturer, replace the motor if required
I	Heat dissipation impeded by deposits	Clean the surface of the servo drive system and ensure that the cooling air can flow in and out unimpeded
	Cooling air inlet or outlet is blocked by foreign bodies	Remove the things that block the inlet or outlet and ensure that the cooling air can flow in and out unimpeded
J	Insufficient shielding for motor and/or encoder cable	Check the shielding and grounding
K	Excessive drive controller gain	Adjust the controller
L	Rotating parts are grinding	Determine cause and adjust parts
	Foreign bodies inside the motor	Replace the motor
	Bearing damage	For low or medium inertia motors, replace the motor; for high inertia motors, replace the bearings
M	Rotor not balanced	Replace the motor

No.	Fault cause	Remedial measures
N	Rotor out of true, shaft bent	Consult the manufacturer
O	Poor alignment	Align motor set, check coupling
P	Coupled machine not balanced	Re-balance coupled machine
Q	Shocks from coupled machine	Check coupled machine
R	Fault originating from the gear-box	Adjust or repair the gearbox

If the fault still cannot be resolved after taking the measures stated above, contact the manufacturer or the Siemens Service Center.

12.2.1 Replacing the motor bearings

Description

Motor bearings are wearing parts. They must be replaced after a defined number of operating hours. At medium loads, the motor bearings last approximately 20000 hours.

Especially favorable ambient conditions, such as low average speed, low radial force (transverse force) and vibration load, can prolong the interval until motor replacement.

Note

Premature bearing and motor replacement

Harsh operating conditions (for example, continuous operation at n_{max}, high vibration or shock loads, frequent reversing duty) reduce the bearing or motor replacement interval by up to 50%.

The procedure for replacing the motor bearing depends on the size of the motor. Replacement of the motor bearings is only intended for high inertia motors. For low or medium inertia motors, it is not possible to replace the motor bearings. Replace the motors in their entirety.

The maintenance and repair of the motor can be performed in authorized Siemens Service Centers all over the world. Contact your personal Siemens representative if you need this service.

12.2.2 Replacing the motor

Requirement

The new motor has the same article number as the motor to be replaced. If you want to replace the motor with another motor with a different article number, you must commission the converter again after replacing the motor.

WARNING

Danger to life due to unintentional starting of the drive unit

Unintentional starting of the drive unit can cause death or severe injury.

- Make sure that the drive unit cannot be started accidentally.
- Post a warning notice at the point where the switch is located.

CAUTION

Burns as a result of touching hot surfaces

In operation, the motor enclosure can reach a high temperature, which can cause burns if touched.

- Do not touch any hot surfaces.
- Allow the motor to cool down before starting any work.
- Use the appropriate personnel protection equipment, for example, gloves.

Procedure

Replacing the motor with a motor with the same article number

1. Switch off all power supplies to the converter.
2. Replace the motor.
   - Disconnect the motor from the converter. You can find detailed information in Section "Connecting the motor (Page 139)".
   - Release the motor mounting screws.
   - Remove the motor.
   - Mount and install the new motor. You can find detailed information in Section "Mounting the motor (Page 108)".
3. Switch the converter on.

Replacing the motor with a motor with another article number

If you are using a different motor type, after performing the three steps above, you must also carry out the following steps:

1. Reset the converter to factory settings.
   You can find more information in Section "Restoring the converter to factory settings".
2. Commission the converter. You can find more information in the following sections:
   "Commissioning (web server) (Page 179)"
   "Series commissioning (Page 231)"

Result

You have now replaced the motor.

12.3 Service and maintenance for spare parts

12.3.1 Spare parts and spare parts compatibility

Overview

Spare parts can be ordered on the Internet via the spare parts service Spares on Web (https://www.sow.siemens.com/).

Spares on Web also gives you the option of determining the article numbers of spare parts.

Description

Converter components are being continuously developed within the scope of product maintenance.

Product maintenance includes, for example, measures to increase the ruggedness or hardware changes that become necessary as components are discontinued.

In the scope of such spare parts-compatible ongoing development, connectors or connection positions are sometimes slightly modified. This does not cause any problems when the component is used as intended. Take this fact into consideration in special installation situations (for example, allow sufficient reserve regarding the cable length).

12.3.2 Replacing the fan unit (400 V converters FSC and FSD only)

Overview

The 400 V converters FSC and FSD are integrated with a fan unit.

The service life of the fan can reach 20000 hours at the rated operating temperature and the average 100% operating load; however, the service life may be shorter, especially in a dusty environment.

Parameter r0277 is used to display the service indicator of the fan as a percentage of the operating hours.

Alarm A30042 appears if the maximum operating hours will soon be reached or has already been exceeded.

The alarm value is contained in r2124 (interpret as a binary value):

- Bit 0 = 1: The service indicator has reached 99%, and after the remaining 1% has elapsed, bit 0 is cleared and bit 2 is set.
- Bit 2 = 1: The service indicator has exceeded 100%.

Replace the defective fan in time to ensure the proper operation of the converter.

You can find the article number of the replacement fan in Section "Replacement fans (Page 72)"

Requirement

You have switched off all power supplies to the converter before replacing the fan unit.

⚠ CAUTION

Injury caused by a rotating fan

Touching a fan while it is rotating can result in injury.

- Switch off the supply voltage to the converter.
- Wait until the fan is stationary before working on it.

⚠ WARNING

Electric shock as a result of a residual charge in power components

After the power supply has been switched off, it takes up to five minutes until the capacitors in the converter have discharged so that the residual charge is at a non-hazardous level. Therefore, touching the converter immediately after powering off can result in electric shock due to residual charge in the power components.

- Check the voltage at the converter connections before releasing the connections at the converter.

⚠ WARNING

Electric shock when live parts are touched

After the fan unit is removed, the live components of the converter are no longer protected from being touched. Contact with live parts can result in death or serious injury.

- Before replacing the fan, switch off the power supply at terminals X1: L1, L2, L3.
- Check that the fan unit is de-energized before removing it.
- Wait until the discharge time specified on the warning labels has elapsed.

Procedure

The fan unit is installed at the top of the converter.

1. Switch off all power supplies to the converter.
2. Press the release clips to remove the fan unit from the converter as shown below. Use a screwdriver if necessary.

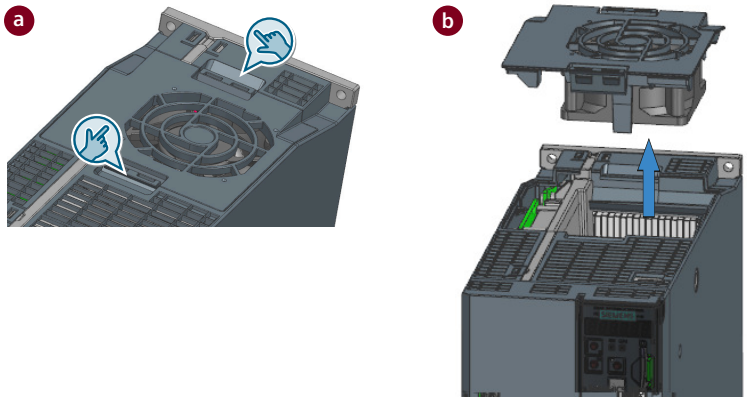

3. Install the new fan unit in the inverse sequence as shown below.

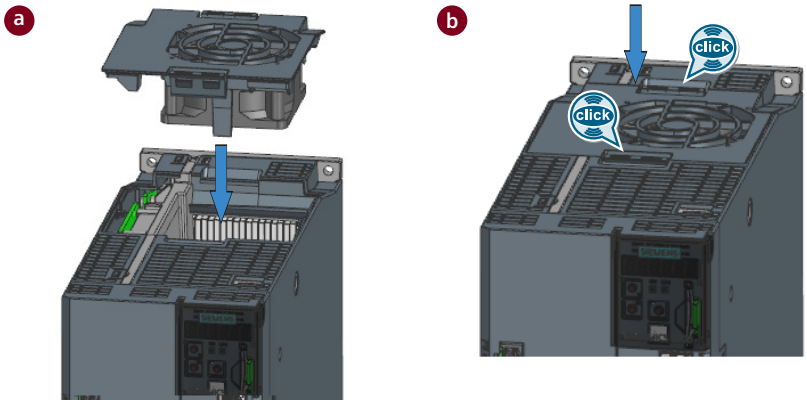

Result

You have now replaced the fan unit.

12.4 Safety Integrated acceptance test after component replacement

Overview

After a component has been replaced or the firmware updated, a reduced acceptance test of the safety functions must be performed.

Description

Depending on the measure performed, the following acceptance tests and documentation are required:

Measure	Converter message after component replacement[1]	Reduced acceptance test	
		Acceptance test	Documentation
Converter replacement	Yes	Testing the EMERGENCY STOP function STO or SS1	• Supplement converter data • Supplement hardware version and firmware version in the converter data • Log new checksums • Countersignature
Encoder replacement	Yes		
Motor replacement	No		No change
Gearbox replacement	No		
Replacing safety-related I/O devices (e.g. EMERGENCY STOP switch)	No	Check the control of the safety functions affected by the components that have been replaced	No change
Converter firmware update	No	No	• Supplement firmware version in the converter data • Log new checksums • Countersignature

[1] When a component is replaced, the message in Startdrive and the web server must be acknowledged.

Technical data

13

13.1 Technical data of the converter

13.1.1 Permissible environmental conditions for the converter

Technical data

Table 13-1 Environmental conditions

Property	Description
Environmental conditions for transport in the transport packaging	
Climatic environmental conditions	• Surrounding air temperature: -40 °C ... +70 °C Suitable according to Class 2K4 to IEC 60721-3-2 • Humidity: Max. 95% at 45 °C according to IEC 60721-3-2:1997
Mechanical environmental conditions	Vibrations permissible according to Class 2M3 to IEC 60721-3-2:1997
Protection against chemical substances	Protected according to Class 2C2 to IEC 60721-3-2:1997
Biological environmental conditions	Suitable according to Class 2B2 to IEC 60721-3-2:1997
Environmental conditions for long-term storage in the product packaging	
Climatic environmental conditions	• Surrounding air temperature: -40 °C ... +70 °C • Relative humidity: Max. 95%, condensation not permissible
Mechanical environmental conditions	Vibrations permissible according to Class 1M2 to IEC 60721-3-1:1997
Protection against chemical substances	Protected according to Class 1C2 to IEC 60721-3-1:1997
Biological environmental conditions	Suitable according to Class 1B2 to IEC 60721-3-1:1997
Environmental conditions in operation	
Installation altitude	• ≤ 2000 m above sea level without power derating • > 2000 m ... 4000 m above sea level with power derating
Climatic environmental conditions	• Surrounding air temperature: – for 200 V FSA: 0 °C ... 50 °C, > 45 °C with power derating – for other converters: 0 °C ... 55 °C, > 45 °C with power derating • Relative humidity: Max. 95%, condensation not permissible

Property	Description
Mechanical environmental conditions	Shocks and vibrations permissible according to Class 3M1 to IEC 60721-3-3:2002 • Shock: – Peak acceleration: 5 g – Duration of shock: 30 ms • Vibration: – 10 Hz ... 58 Hz: 0.075 mm displacement amplitude – 58 Hz ... 200 Hz: 1 g acceleration amplitude
Protection against chemical substances	Protected according to Class 3C2 to IEC 60721-3-3:2002
Biological environmental conditions	Suitable according to Class 3B1 to IEC 60721-3-3:2002
Pollution	Suitable for environments with degree of pollution 2 according to IEC 61800-5-1

13.1.2 General technical data

Technical data

Table 13-2 General technical data of the converter

Property	Description
Overload capability	350% overload: for 200 V and 400 V variants with a power rating of 0.1 kW to 0.75 kW 300% overload: for 200 V and 400 V variants with a power rating of 1 kW to 7 kW
Output frequency (Hz)	0 ... 550
IGBT pulse frequency without derating (kHz)	8
Control system	Servo control
Dynamic brake	Integrated
Protective functions	Grounding fault protection, output short-circuit protection[1)], overvoltage/undervoltage protection[2)], converter I^2t protection, motor overtemperature protection[3)], IGBT overtemperature protection
Surge voltage	Fulfill the requirement of the standard IEC 61800-3
Overvoltage category	Category III according to IEC 61800-5-1
Minimum prospective short-circuit current	To prevent fire in the event of a fault, a minimum value must be ensured for the prospective short-circuit current so that the upstream protective device trips quickly enough. A typical value when dimensioning is 20 to 25 times[4)] the rated current of the protection device used.
Maximum permissible short-circuit current (SCCR, kA rms)	For 200 V variants: 100[5)] For 400 V variants: 65
Cooling type	For 200 V variants: Natural cooling For 400 V variants: • FSA and FSB: Natural cooling • FSC and FSD: Fan cooling

Property	Description
Degree of protection according to IEC 60529	IP20
Mains supply	
Permissible mains supply network	TN, TT, IT
Line voltage	1 AC/3 AC 200 V ... 240 V 3 AC 380 V ... 480 V
Line frequency (Hz)	50/60
Permissible line voltage fluctuation	-15% ... +10%
Permissible line frequency fluctuation	-10% ... +10%
24 V DC power supply	
Voltage (V)	24
Permissible voltage fluctuation (V)	When using a motor without brake: 20.4 ... 28.8 (-15% ... +20%) When using a motor with brake: 22.8 ... 28.8 (-5% ... +20%)
Maximum current (A)	For 200 V variants: • When using a motor without a brake: 1.2 • When using a motor with a brake: 2.2 For 400 V variants: • When using a motor without a brake: 1.2 • When using a motor with a brake: 3.2
Safety insulation class	SELV/PELV
Speed control mode	
Speed control range	Analog speed command 1:2000, internal speed command 1:5000
Analog speed command input	-10 V DC to +10 V DC/rated speed
Torque limit	Set through a parameter or the analog input command (0 V DC to +10 V DC/maximum torque)
Position control mode	
Maximum input pulse frequency	4 M (differential input), 200 kpps (open collector input)
Command pulse multiplying factor	Recommended electronic gear ratio (A/B) A: 1 - 10000, B: 1 - 10000 1/1000 < A/B < 64000
In-position range setting	0 to 2147483647 pulse (command pulse unit)
Error excessive	±1/10 revolutions
Torque limit	Set through a parameter or the analog input command (0 V DC to +10 V DC/maximum torque)
Torque control mode	
Analog torque command input	-10 V DC to +10 V DC/maximum torque (input impedance 10 kΩ to 12 kΩ)
Speed limit	Set through a parameter or the analog input command (0 V DC to +10 V DC/maximum speed)
Inputs and outputs	

Property	Description
Digital inputs	Type 3 according to IEC 61131-2 Maximum input current: 4 mA (for "1" signal: > 1.5 mA) General delay time: • DI 0 → 1: < 10 µs • DI 1 → 0: < 150 µs Fast digital input delay time: • Fast DI 0 → 1: < 5 µs • Fast DI 1 → 0: < 5 µs
Digital outputs	Maximum output current: 100 mA Delay time: < 2 ms
Analog input (for S200 PTI only)	Input voltage range: -10 V ... + 10 V Common mode voltage range: -12 V ... + 12 V Resolution: 16-bit
Analog output (for S200 PTI only)	Output voltage range: -10 V ... +10 V Resolution: 12-bit
Pulse train input	Maximum required input frequency: • Open collector 24 V: 200 kHz • Line driver 5 V: 4 MHz
Pulse train output	Output voltage: line driver (5 V differential)
	Output frequency: ≤ 4 MHz
Safety Integrated (for S200 PTI only)	
Safety functions	STO/SS1-t, SIL 3 / PL e / Category 3 or 4
	Safety functions fulfill the requirements of the following standards: • SIL 3 according to IEC 61800-5-2 • PL e according to ISO 13849-1 • Category 3 or 4 according to ISO 13849-1
	Response time: ≤ 20 ms The response time of the Safe Torque Off function is the time between selecting the function and the function becoming active.
	Probability of Failure per Hour (PFH): < 10^{-7} Failure probabilities must be specified for Safety Integrated Functions in the form of a PFH value according to IEC 61800-5-2, IEC 62061 and ISO 13849-1. The PFH value of a Safety Integrated Function depends on the safety concept of the converter, its hardware configuration and the PFH values of the other components used for the Safety Integrated Function.
	Mission time: 20 years You may not operate converters with integrated safety functions for longer than the mission time. The mission time starts when the device is delivered. The mission time cannot be extended. This is the case even if a service department checks the converter – or in the meantime, the converter was decommissioned.

1) Integral solid state short circuit protection does not provide branch circuit protection. Branch circuit protection must be provided in accordance with the National Electrical Code and any additional local codes.

2) The 200 V converter has an overvoltage threshold of 410 V DC and an undervoltage threshold of 155 V DC; the 400 V converter has an overvoltage threshold of 820 V DC and undervoltage threshold of 320 V DC.

[3] Motor temperature is calculated by motor thermal model and protected by the output current from the converter.
[4] To comply with permissible line harmonics, depending on the line connection conditions, different values may be required.
[5] The maximum permissible short-circuit current for 200 V variants with Type E Combination Motor Controllers is 65 kA.

13.1.3 Specific data of the 200 V converters

Technical data

Table 13-3 Specific technical data of 200 V converters FSA

Article No. 6SL5□10-1BB		**10-1AA0**	**10-2AA0**
Frame size		FSA	FSA
Rated input current (A)	1 AC	1.2	2.0
	3 AC	0.6	1.1
Rated output current (A)		0.81	1.33
Maximum output current (A)		3.3	5.1
Maximum supported motor power (kW)		0.1	0.2
Power loss (W)		12.0	15.0
Inrush current (A)	1 AC	8.9	8.9
	3 AC	10.5	10.5
Fuse according to IEC		3NA3804 (4 A)	3NA3804 (4 A)
		3NW6304-1 (4 A)	3NW6304-1 (4 A)
Fuse according to UL, Class J		3 A	3 A
Leakage current (mA)	1 AC	19.0	19.0
	3 AC	24.0	24.0
Outline dimensions (W x H x D, mm)		40 x 170 x 135	40 x 170 x 135
Weight (g)	S200 PTI	763.0	809.6
	S200 Basic PTI	763.0	763.0

Table 13-4 Specific technical data of 200 V converters FSB

Article No. 6SL5□10-1BB		**10-4AA0**
Frame size		FSB
Rated input current (A)	1 AC	3.0
	3 AC	1.8
Rated output current (A)		2.4
Maximum output current (A)		9.2
Maximum supported motor power (kW)		0.4
Power loss (W)		24.0
Inrush current (A)	1 AC	8.4
	3 AC	8.5

Article No. 6SL5□10-1BB		10-4AA0
Fuse according to IEC		3NA3801 (6 A)
		3NW6301-1 (6 A)
Fuse according to UL, Class J		6 A
Leakage current (mA)	1 AC	21.0
	3 AC	24.0
Outline dimensions (W x H x D, mm)		40 x 170 x 170
Weight (g)	S200 PTI	1028.9
	S200 Basic PTI	960.0

Table 13-5 Specific technical data of 200 V converters FSC

Article No. 6SL5□10-1BB		10-8AA0	11-0AA0
Frame size		FSC	FSC
Rated input current (A)	1 AC	7.0	8.0
	3 AC	3.5	4.0
Rated output current (A)		4.4	4.4
Maximum output current (A)		16.8	16.8
Maximum supported motor power (kW)		0.75	1.0
Power loss (W)		45.0	46.0
Inrush current (A)	1 AC	6.2	6.2
	3 AC	7.6	7.6
Fuse according to IEC		3NA3805 (16 A)	3NA3805 (16 A)
		3NW6006-1 (12 A)	3NW6006-1 (12 A)
Fuse according to UL, Class J		15 A	15 A
Leakage current (mA)	1 AC	20.0	20.0
	3 AC	23.0	23.0
Outline dimensions (W x H x D, mm)		60 x 170 x 195	60 x 170 x 195
Weight (g)	S200 PTI	1741.4	1741.4
	S200 Basic PTI	1741.4	1741.4

13.1.4 Specific data of the 400 V converters

Technical data

Table 13-6 Specific technical data of 400 V converters FSA

Article No. 6SL5510-1BE	10-2AA0	10-4AA0
Frame size	FSA	FSA
Rated input current (A)	1.3	1.3
Rated output current (A)	1.3	1.3

Article No. 6SL5510-1BE	10-2AA0	10-4AA0
Maximum output current (A)	5.1	6.0
Maximum supported motor power (kW)	0.2	0.4
Power loss (W)	31.0	32.0
Inrush current (A)	8.0	8.0
Fuse according to IEC	3NA3804 (4 A)	3NA3804 (4 A)
	3NW6304-1 (4 A)	3NW6304-1 (4 A)
Fuse according to UL, Class J	3 A	3 A
Leakage current (mA)	36.0	36.0
Outline dimensions (W x H x D, mm)	50 x 180 x 200	50 x 180 x 200
Weight (g)	1517.5	1517.5

Table 13-7 Specific technical data of 400 V converters FSB

Article No. 6SL5510-1BE	10-8AA0	11-0AA0
Frame size	FSB	FSB
Rated input current (A)	2.5	3.0
Rated output current (A)	2.5	3.0
Maximum output current (A)	9.3	11.5
Maximum supported motor power (kW)	0.75	1.0
Power loss (W)	46.0	54.0
Inrush current (A)	10.0	10.0
Fuse according to IEC	3NA3803 (10 A)	3NA3803 (10 A)
	3NW6303-1 (10 A)	3NW6303-1 (10 A)
Fuse according to UL, Class J	10 A	10 A
Leakage current (mA)	39.0	39.0
Outline dimensions (W x H x D, mm)	60 x 180 x 200	60 x 180 x 200
Weight (g)	1912.4	1912.4

Table 13-8 Specific technical data of 400 V converters FSC

Article No. 6SL5510-1BE	11-5AA0	12-5AA0
Frame size	FSC	FSC
Rated input current (A)	5.5	8.0
Rated output current (A)	5.3	7.8
Maximum output current (A)	20.0	26.5
Maximum supported motor power (kW)	1.75	2.5
Power loss (W)	84.0	123.0
Inrush current (A)	23.0	23.0
Fuse according to IEC	3NA3805 (16 A)	3NA3805 (16 A)
	3NW6006-1 (12 A)	3NW6305-1 (16 A)
Fuse according to UL, Class J	15 A	20 A

Article No. 6SL5510-1BE	11-5AA0	12-5AA0
Leakage current (mA)	46.0	46.0
Outline dimensions (W x H x D, mm)	70 x 180 x 200	70 x 180 x 200
Weight (g)	2008.4	2008.4

Table 13-9 Specific technical data of 400 V converters FSD

Article No. 6SL5510-1BE	13-5AA0	15-0AA0	17-0AA0
Frame size	FSD	FSD	FSD
Rated input current (A)	11.0	13.0	14.2
Rated output current (A)	11.0	12.6	13.2
Maximum output current (A)	38.1	38.8	37.4
Maximum supported motor power (kW)	3.5	5.0	7.0
Power loss (W)	171.0	194.0	205.0
Inrush current (A)	53.0	53.0	53.0
Fuse according to IEC	3NA3807 (20 A)	3NA3807 (20 A)	3NA3810 (25 A)
	3NW6307-1 (20 A)	3NW6007-1 (20 A)	3NW6010-1 (25 A)
Fuse according to UL, Class J	25 A	25 A	25 A
Leakage current (mA)	60.0	60.0	60.0
Outline dimensions (W x H x D, mm)	95 x 260 x 230	95 x 260 x 230	95 x 260 x 230
Weight (g)	4517.5	4517.5	4517.5

13.1.5 Overload capacity

Description

SINAMICS S200 converter product line can work with a certain overload capacity for a specific time period.

- 350% overload capacity: for 200 V and 400 V variants with a power rating of 0.1 kW to 0.75 kW
- 300% overload capacity: for 200 V and 400 V variants with a power rating of 1 kW to 7 kW

The typical load cycle can be repeated without limitation.

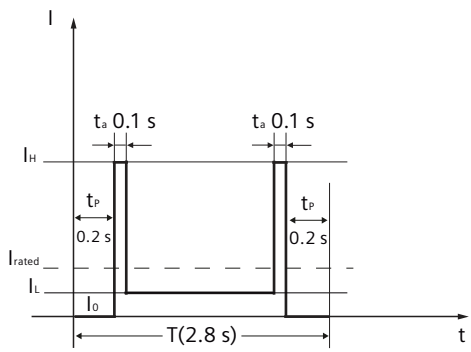

I_H	Maximum current	t_a	Acceleration time
I_{rated}	Rated current	t_p	Preset time
I_L	Minimum current	T	Total cycle period
I_0	Stall current		

Figure 13-1 Typical load cycle

The other duty cycle can be calculated by the following formula:

$I_{rated}^2 \times T = I_0^2 \times t_p \times 2 + I_H^2 \times t_a \times 2 + I_L^2 \times (T - t_p \times 2 - t_a \times 2)$

$I_H = n \times I_{rated}$ (n < 4)

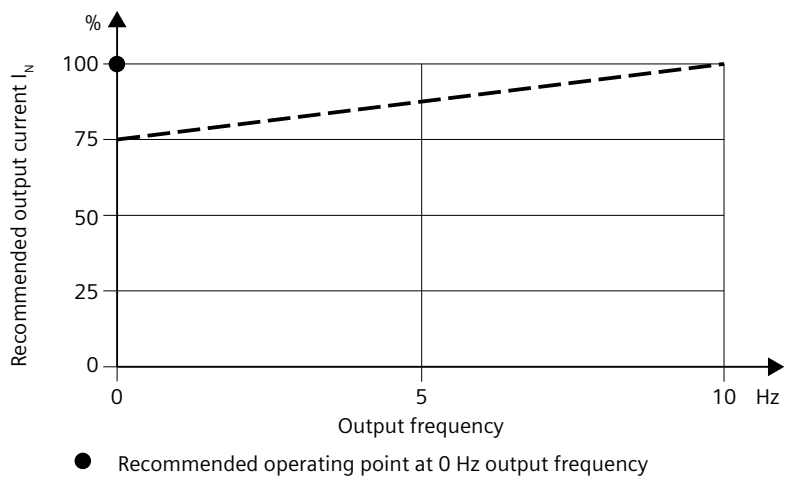

Figure 13-2 Recommended output current at low frequencies

A current derating is only applicable for output frequencies < 10 Hz.

A current derating must be taken into account if the percentage time of operation at frequencies < 10 Hz is more than 2 % of the total daily operating time.

The current specified here must also not be exceeded during load cycles.

When quickly passing through frequencies 0 to 10 Hz, derating can be ignored (e.g. for positioning applications).

13.1.6 Power derating as a function of the installation altitude and ambient temperature

Description

Power derating as a function of the installation altitude and ambient temperature

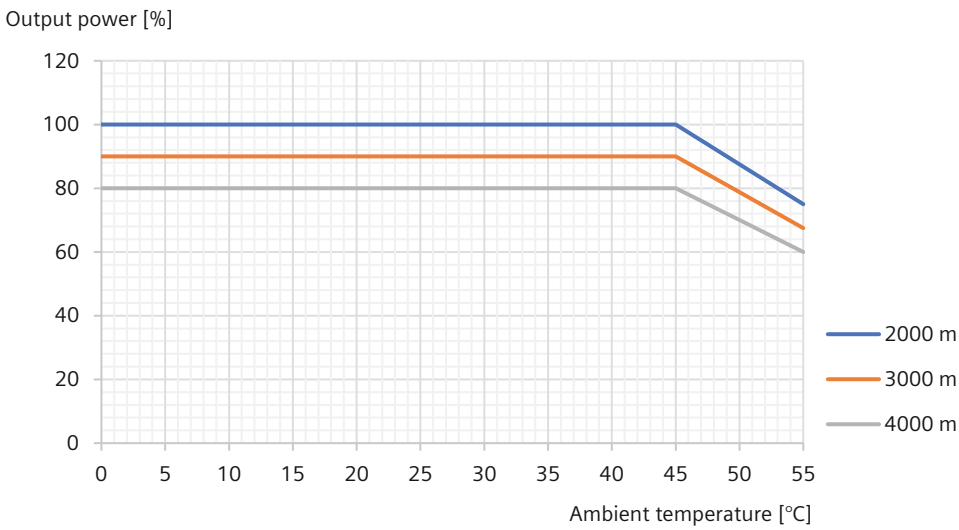

Note

A maximum of 2000 m is permissible for CSA compliance.

13.1.7 Protection of persons from electromagnetic fields

Overview

Protection of workers from electromagnetic fields is specified in the European EMF Directive 2013/35/EU. This directive is implemented in national law in the European Economic Area (EEA). Employers are obligated to design workplaces in such a way that workers are protected from impermissibly strong electromagnetic fields.

To this end, assessments and/or measurements must be performed for workplaces.

Requirement

The following general conditions apply for the evaluations and measurements:

1. The laws for protection from electromagnetic fields in force in individual EU member states can go beyond the minimum requirements of the EMF Directive 2013/35/EU and always take precedence.
2. The ICNIRP 2010 limits for the workplace are the basis for the assessment.

3. The 26th BImSchV (German Federal Emission Protection Regulation) defines 100 µT (RMS) for the assessment of active implants.
   According to Directive 2013/35/EU, 500 µT (RMS) at 50 Hz is applicable here.
4. The routing of power cables has a significant impact on the electromagnetic fields that occur. Install and operate the components inside metallic cabinets in compliance with the documentation and use shielded motor cables (see "EMC-compliant installation (Page 101)").

Description

The converters are normally used in machines. The assessment and testing is based on DIN EN 12198-1 and IEC 62311.

Compliance with the limit values was assessed for the following frequencies:

- Line frequency 47 ... 63 Hz
- 8 kHz pulse frequency

The indicated minimum distances apply to the head and complete torso of the human body. Shorter distances are possible for extremities.

Table 13-10 Minimum distances to the converter

Individuals without active implants		Individuals with active implants	
Control cabinet closed	**Control cabinet open**	**Control cabinet closed**	**Control cabinet open**
0 cm	Forearm length (approximately 35 cm)	Must be separately assessed depending on the active implant.	

13.2 Technical data of the motor

13.2.1 Permissible environmental conditions for the motor

Technical data

Table 13-11 Environmental conditions for transport

Environmental conditions for transport in the transport packaging according to Class 2K3 to IEC 60721-3-2:1997, except for environmental variables "air temperature" and "condensation"	
Climatic environmental conditions	• Temperature: -15 °C ... +70 °C • Highest relative humidity: < 90% at 30 °C, condensation not permissible
Mechanical environmental conditions	Vibrations permissible according to Class 2M5 to IEC 60721-3-2:1997
Protection against chemical substances	Protected according to Class 2C2 to IEC 60721-3-2:1997
Biological environmental conditions	Suitable according to Class 2B2 to IEC 60721-3-2:1997

Table 13-12 Environmental conditions for long-term storage

Environmental conditions for long-term storage in the product packaging according to Class 1K3 to IEC 60721-3-1:1997, except for environmental variables "air temperature", "highest relative humidity" and "condensation"	
Climatic environmental conditions	• Temperature: -20 °C ... +65 °C • Highest relative humidity: < 90% at 30 °C, condensation not permissible
Mechanical environmental conditions	Vibration-free storage space, v_{rms} < 0.2 mm/s
Protection against chemical substances	Protected according to Class 1C2 to IEC 60721-3-1:1997
Biological environmental conditions	Suitable according to Class 1B2 to IEC 60721-3-1:1997
Duration	• Six months for the above-mentioned conditions. • Special preservation measures are required for storage periods of six months up to a maximum of two years. For more information, please contact your local sales partner.

Table 13-13 Environmental conditions during operation

Environmental conditions during operation according to 3K4 to IEC 60721-3-3:2002, except for environmental variables "low air temperature", "condensation" and "low air pressure"	
Installation altitude	Up to 1000 m above sea level without limitations You can get additional information in Section "Derating factors (Page 575)".
Climatic environmental conditions[1]	• Temperature: -15 °C ... +40 °C, power derating at higher temperatures • Relative humidity: < 90% at 30 °C, condensation not permissible • Absolute air humidity: 1 g/m³ ... 29 g/m³ • Rate of temperature change[2]: 0.5°C/min • Atmospheric pressure: 89 kPa[1) 3)] ... 106 kPa[4)] • Solar radiation: 700 W/m² [2)] • Movement of the air: 1.0 m/s • Water (other than rain): see Section "Degree of protection (Page 577)"
Mechanical environmental conditions	• Vibration severity grade: A (according to IEC 60034-14:2018) • Shock resistance (m/s²): – 1FL2102, 1FL2□03, 1FL2104, 1FL2204, 1FL2□05: 50 (continuous in axial direction), 50 (continuous in radial direction), 300 (in a short time of 11 ms) – 1FL23□□: 25 (continuous in axial direction), 50 (continuous in radial direction), 300 (in a short time of 11 ms)
Protection against chemical substances	Protected according to 3C2 to IEC 60721-3-3:2002
Biological environmental conditions	Suitable according to 3B2 to IEC 60721-3-3:2002
Pollution	Suitable for environments with degree of pollution 2 according to IEC 61800-5-1
Cooling air	Clean and dry air
The motors are not suitable for operation under the following circumstances: • In a vacuum[5)] • In salt-laden or aggressive atmospheres • Outdoors	

1) Increased ruggedness with regard to low air temperature and low atmospheric pressure better than 3K3 according to IEC 60721-3-3:2002

2) Averaged over a period of 5 min

3) The limit value of 89 kPa covers applications at altitudes up to 1000 m.

4) Conditions in mines are not considered.

5) Operation in a vacuum is not permissible because of the low dielectric strength and poor heat dissipation.

13.2.2 General technical data

Technical data

Table 13-14 General technical data of the motor

Property	Description
Type of motor	Servo motor
Rotor inertia	• 1FL21: motor with low rotor inertia • 1FL22: motor with medium rotor inertia • 1FL23: motor with high rotor inertia
Cooling	Natural cooling
Thermal class	• 1FL2102, 1FL2□03, 1FL23□□, 1FL2104-□B, 1FL2204-□B: B • 1FL2104-□A, 1FL2204-□A, 1FL2□05: F
Operating temperature	-15 °C ... +40 °C, power derating at higher temperatures
Relative humidity	< 90% at 30 °C, condensation not permissible
Installation altitude according to IEC 60034-6	≤ 1000 m above sea level; otherwise power derating
Type of construction according to IEC 60034-7	IM B5 (IM V1, IM V3)
Degree of protection according to IEC 60034-5	• 1FL2102, 1FL2□03, 1FL2104-□A, 1FL2204-□A: IP54 for the shaft extension (without shaft sealing) and IP65 for the motor body, optionally IP65 for the whole motor (with shaft sealing) • 1FL2104-□B, 1FL2204-□B, 1FL2□05, 1FL23□□: IP65
Temperature monitoring	Thermal motor model
Paint finish	Anthracite (614 Anthrazit)
Shaft extension according to DIN 748-3 and IEC 60072-1	Plain shaft, optionally shaft with feather key (half-key balancing)
Radial eccentricity, concentricity, and axial eccentricity according to DIN 42955 and IEC 60072-1	Tolerance N (normal)
Vibration severity grade according to IEC 60034-14	Grade A
China energy efficiency grade according to GB 30253-2024	• 1FL2306-1: Grade 2 • Other variants: Grade 1
Sound pressure level L_{pA} (1 m) according to ISO 1680, max. tolerance +3 dB(A)	• 1FL2102, 1FL2□03, 1FL2104, 1FL2204: 60 dB(A) • 1FL2□05, 1FL2304: 65 dB(A) • 1FL2306, 1FL2310: 70 dB(A)
Encoder	• Absolute encoder single-turn, 17-bit • Absolute encoder single-turn, 21-bit • Absolute encoder, 21-bit single-turn + 12-bit multiturn

Property	Description
Holding brake	Optional integrated holding brake
Connection	• 1FL2102, 1FL2□03, 1FL2104, 1FL2204: dual-cable connections with a hybrid connector • 1FL2□05: two-cable connections with two angular connectors • 1FL23□□: three-cable connections with three angular connectors

13.2.3 Protection against electromagnetic fields (motor)

Description

WARNING

Malfunction of active implants due to magnetic and electrical fields

Electric motors pose a danger to people with active medical implants, e.g. heart pacemakers, who come close to these motors.

- If you are affected, stay a minimum distance of 30 cm away from the motors (tripping threshold for static magnetic fields of 0.5 mT according to Directive 2013/35/EU).

NOTICE

Damage to the absolute encoder due to the magnetic interference from the magnetic field

The magnetic interference from the magnetic field can cause a damage to the absolute encoder.

- To avoid magnetic interference to the absolute encoder, keep the motor at least 15 mm away from devices that produce a magnetic field stronger than 10 mT.

13.2.4 Cooling

Description

The 1FL2 motor is a non-ventilated motor.

To ensure sufficient heat dissipation when installed, the motor requires a minimum clearance of 100 mm from adjacent components on three sides.

Maintain the clearance irrespective of the following mounting variants.

Non-thermally insulated mounting

Some of the motor power loss is dissipated through the flange when the motor is connected to the mounting surface.

Table 13-15 Mounting conditions for non-thermally insulated mounting

Motor	Steel plate: width x height x thickness (mm)
1FL2102	200 x 200 x 6
1FL2□03	250 x 250 x 6
1FL2104	
1FL2204	
1FL2□05	300 x 300 x 12
1FL2304	270 x 270 x 10
1FL2306	390 x 390 x 15
1FL2310	420 x 420 x 20

The data in the table refers to an ambient temperature of +40 °C and an installation altitude up to 1000 m above sea level. If the environmental conditions are different, derating may be required. You can find information on this in Section "Derating factors (Page 575)".

Larger mounting surfaces improve heat dissipation.

Thermally insulated mounting without additional mounted components

For naturally cooled motors, you must reduce the S1-characteristic curve as follows:

- Reduce the motor static torque by a range of 20% to 30%.
- Reduce the torque at 3000 r/min by a range of 40% to 50%.

Thermal motor protection

The converter monitors the motor temperature based on a thermal motor model and issues the alarm "Motor overtemperature" before the maximum temperature is reached. If the motor exceeds the maximum temperature, the converter switches off the motor with the fault message "Motor overtemperature".

If the ambient temperature exceeds 40 °C, you need to set the ambient temperature at the converter so that the motor is reliably protected.

- To do this, select parameter p0613 at the converter.
- Set the maximum ambient temperature that occurs.

Parameter r0034 indicates the thermal load of the motor as a percentage. The reading is influenced by the ambient temperature selected in parameter p0613.

You can find additional information in Section "Parameter list (Page 651)".

13.2.5 Derating factors

Overview

Due to the decreasing air pressure in higher installation altitudes, the cooling of the motor deteriorates. Therefore, reduce the power of the motor as the installation altitude increases.

Multiply the permissible torques or powers by the factors from the following table.

Reduce the torques and powers according to the values determined.

Description

Factors for power derating depending on the installation altitude and the ambient temperature

Table 13-16 Power derating factors

Installation altitude above sea level in m	Ambient temperature in °C					
	30	**40**	**45**	**50**	**55**	**60**
1000	1.08	1.00	0.96	0.91	0.87	0.82
2000	1.02	0.93	0.89	0.84	0.79	0.73
3000	0.95	0.86	0.81	0.75	0.70	0.63
4000	0.88	0.77	0.72	0.66	0.59	0.52
5000	0.80	0.68	0.62	0.55	0.47	0.37

Calculating the reduced characteristic curve

$M_{S1\ red}(n) = x_d \bullet M_{S1}(n / x_d)$

$M_{S1\ red}$	Reduced motor torque for S1 operation at the required installation altitude and ambient temperature
M_{S1}	Motor torque for S1 operation at ambient temperature of 40 °C and 1000 m above sea level
n	Motor speed
x_d	Derating factor from the table above

Graphic display of the derating factors

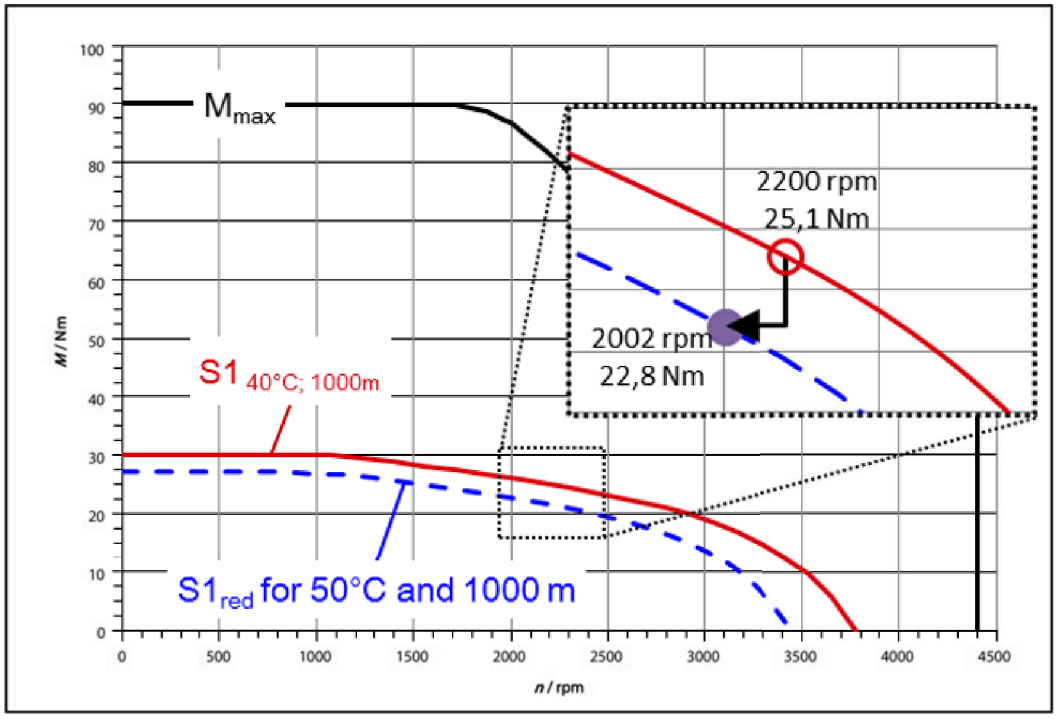

Factors for reducing the DC link voltage depending on the installation altitude

The voltage strength of the motor insulation is reduced for installation altitudes exceeding 2000 m above sea level. Check whether it is necessary to limit the DC link voltage.

Reduce the permissible DC link voltage with increasing installation altitude due to the decreasing air pressure.

Table 13-17 Limit values for the DC link voltage for 1FL2 motors at installation altitudes below 2000 m mean sea level

Motors with the following rated speed in the article number 1FL2□□□-□□X□□..., X =	Max. permissible converter DC link voltage in V
G	375
C, F	720

Table 13-18 Typical DC link voltage of the SINAMICS converters

Network	Infeed	DC link voltage in V
1 AC 200 V	Non-regulated	230
1 AC 240 V	Non-regulated	276
3 AC 200 V	Non-regulated	270
3 AC 240 V	Non-regulated	324

Network	Infeed	DC link voltage in V
3 AC 380 V	Non-regulated	513
3 AC 480 V	Non-regulated	648

As the DC link voltage is reduced, the converter output voltage also decreases. This reduces the operating range in the M-n diagram.

The M-n diagrams are provided in Section "Technical data and characteristics of the 1FL2 (Page 592)".

13.2.6 Degree of protection

Overview

The degree of protection of a motor is marked, for example, using "IP65".

The motor degree of protection is classified according to IEC 60034-5.

IP = International Protection
1st digit = protection against the ingress of foreign bodies
2nd digit = protection against water

IEC 60034-5 is valid for water as potentially occurring medium, not for oil or other creeping fluids.

Configure the motor in the required degree of protection.

Description

Table 13-19 Degree of protection of 1FL2

Motor	IP54	IP65
1FL2102 1FL2□03 1FL2104-□A 1FL2204-□A	X	X
1FL2104-□B 1FL2204-□B 1FL2□05 1FL23□□	-	X

Note

For 1FL2 motors SH20/SH30 with IP54, you can install a shaft sealing ring to upgrade the degree of protection from IP54 to IP65.

To order a shaft sealing ring, see Section "IP65 degree of protection kit for 1FL2 motors SH20 and SH30 (Page 74)".

To install a shaft sealing ring, see Section "Replacement instructions for shaft sealing ring on 1FL2 motors SH20 and SH30 (Page 908)".

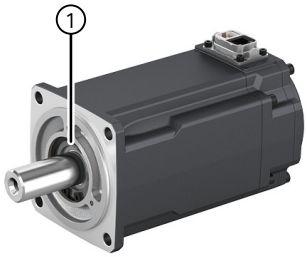

1FL2102
1FL2□03
1FL2104
1FL2204

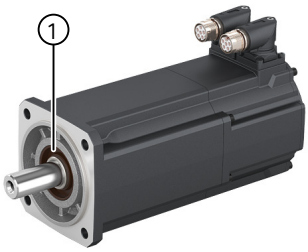

1FL2□05

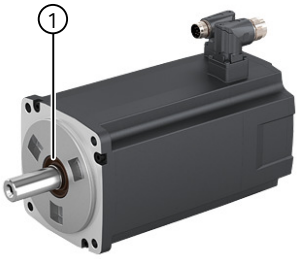

1FL23□□

① Radial shaft sealing ring

The radial shaft sealing ring shortens the length of shaft extension that can be used.

Note

The radial shaft sealing ring should be used with sufficient lubricant oil splashed on it. Do not use a motor with a radial shaft sealing ring submerged in oil.

It is permissible that the radial shaft sealing ring runs dry for a short time.

With degrees of protection IP65, it is not permissible for liquid to collect on the flange.

The service life of the radial shaft sealing ring is approximately 5000 operating hours.

More information

For more information, see Section "Shaft extension (Page 580)".

13.2.7 Balancing

Description

The motors are balanced according to IEC 60034-14.

Motors with feather key in the shaft are half-key balanced.

A mass equalization for the protruding half key must be taken into account for the output elements.

13.2.8 Vibrational behavior

Description

Vibration severity grade

The vibration response of the system at the location of use is influenced by output elements, any built-on parts, the alignment, the installation, and external vibrations. This can change the vibration values of the motor.

The motors conform to vibration severity grade A according to IEC 60034-14:2018.

The specified values refer only to the motor. The conditions at the installation location can influence the system vibration response and increase the vibration values on the motor.

The vibration severity grade is maintained up to the rated speed (n_N).

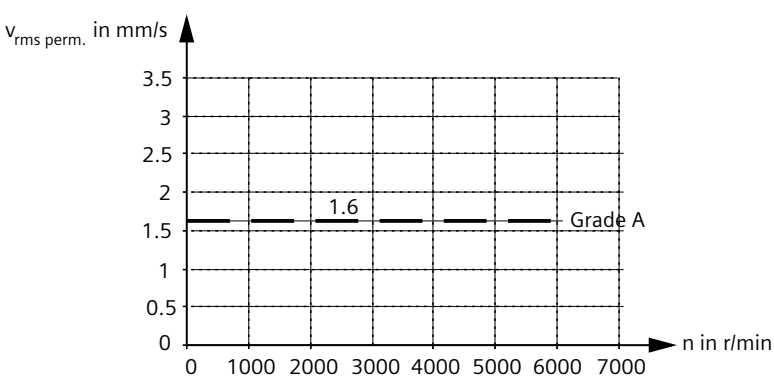

Vibration response

Comply with the vibration values in the following tables to ensure perfect functioning of the motor and a long service life.

Table 13-20 Vibration values for motors with low or medium inertia

Vibration velocity V_{rms} to ISO 10816	Vibration acceleration a_{peak} axial	Vibration acceleration a_{peak} radial
Max. 4.5 mm/s	50 m/s²	50 m/s²

Table 13-21 Vibration values for motors with high inertia

Vibration velocity V_{rms} to ISO 10816	Vibration acceleration a_{peak} axial	Vibration acceleration a_{peak} radial
Max. 4.5 mm/s	25 m/s²	50 m/s²

To evaluate the vibration velocity, the measuring equipment must meet the requirements of ISO 2954.

Select the measuring locations according to ISO 10816-1, Section 3.2. See the illustration below for more information on the measuring points.

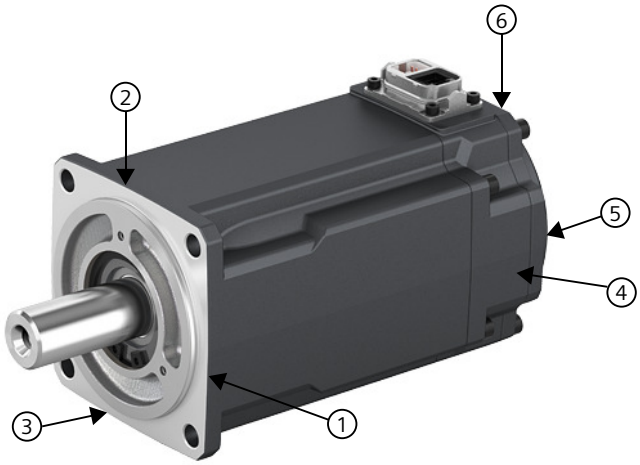

1	End shield DE radial	4	End shield NDE radial
2	End shield DE radial	5	End shield NDE axial
3	End shield DE axial	6	End shield NDE radial

The vibration acceleration is evaluated in the frequency range from 10 Hz to 2000 Hz. The maximum peak in the measurement time range is considered.

The vibration values must not exceed the specified limits at any measuring location.

13.2.9 Shaft extension

Technical data

The motors are supplied with cylindrical shaft extensions. The shaft extension usually has a centering thread according to DIN 332, form DR.

Optionally, a shaft extension with key slot and feather key is available.

With motors 1FL2102, 1FL2□03, 1FL2104-□A, and 1FL2204-□A, the usable shaft extension is reduced by the radial shaft sealing ring with the IP65 degree of protection.

Table 13-22 Dimension values

Motor	Shaft dimensions with IP54 Diameter x length in mm	Shaft dimensions with IP65 Diameter x length in mm	Feather key Width x height x length in mm	Centering thread
1FL2102	8 (h6) × 22.5	8 (h6) × 18.2	3 × 3 × 16	M3
1FL2□03	14 (h6) × 27	14 (h6) × 21	5 × 5 × 16	M5
1FL2104-□A 1FL2204-□A	19 (h6) × 37	19 (h6) × 32	6 × 6 × 25	M6
1FL2104-□B 1FL2204-□B	-	19 (h6) × 37	6 × 6 × 25	M6
1FL2105	-	19 (h6) × 42	6 × 6 × 25	M6
1FL2205	-	19 (h6) × 37	6 × 6 × 25	M6
1FL2304	-	19 (h6) × 30	6 × 6 × 25	M6
1FL2306	-	22 (h6) × 50.5	8 × 7 × 44	M8
1FL2310	-	35 (h6) × 75	10 × 8 × 60	M12

13.2.10 Radial eccentricity, concentricity, and axial eccentricity

Technical data

The shaft and flange accuracies for the 1FL2 motors are implemented according to DIN 42955 and IEC 60072-1 as standard (Normal class).

Table 13-23 Radial eccentricity tolerance of the shaft to the frame axis (referring to cylindrical shaft extensions)

Motor	Standard (Normal class)
1FL2102	0.03 mm
1FL2□03	0.035 mm
1FL2□04 1FL2□05 1FL2306	0.04 mm
1FL2310	0.05 mm

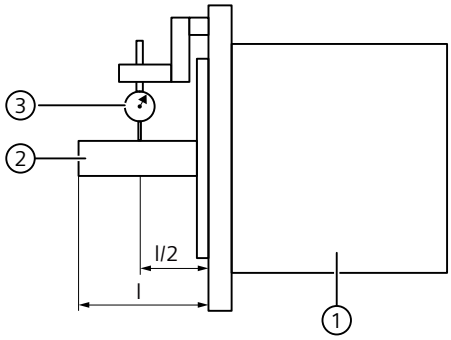

1 Motor
2 Motor shaft
3 Dial gauge

Figure 13-3 Checking the radial eccentricity

Table 13-24 Concentricity and axial eccentricity tolerance of the flange surface to the shaft axis (referring to the centering diameter of the mounting flange)

Motor	Standard (Normal class)
1FL2102	0.06 mm
1FL2□03 1FL2□04 1FL2□05	0.08 mm
1FL2306 1FL2310	0.1 mm

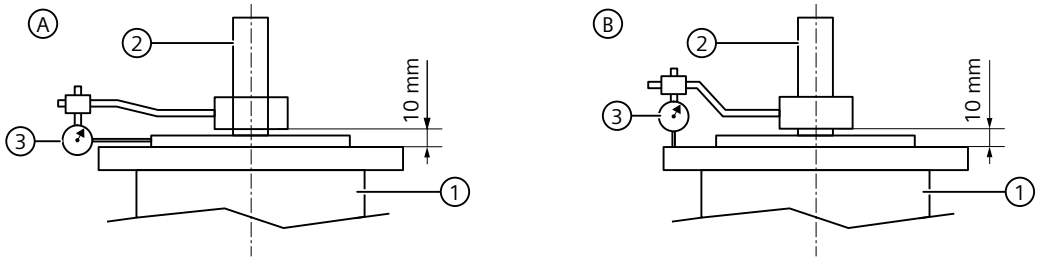

A Check for concentricity
B Check for axial eccentricity

1 Motor
2 Motor shaft
3 Dial gauge

Figure 13-4 Checking the concentricity and axial eccentricity

13.2.11 Axial and radial forces

13.2.11.1 Permissible axial forces

Technical data

Table 13-25 Permissible axial forces

Type	Axial force, static[1] $F_{A\ stat}$ / N
1FL2102	50
1FL2□03	98
1FL2104 1FL2204	100
1FL2□05	120
1FL2304	140
1FL2306	245
1FL2310	590

[1] The specified axial forces are determined by the spring loading and therefore also apply to motors with holding brake.

Note

Applications with an angular toothed pinion directly on the motor shaft are not permitted if the permissible axial forces are exceeded.

13.2.11.2 Permissible radial forces

Description

As a result of the bearing arrangement, the 1FL2 is designed for aligned forces. Forces such as these occur for belt drives, for example.

All radial forces always refer to aligned forces.

NOTICE

Motor damage caused by circulating forces

Circulating forces can cause bearing motion, and therefore damage the motor.

- Avoid rotating forces.

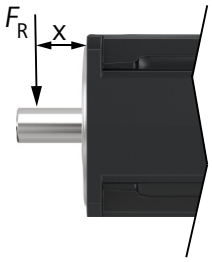

F_R Point of application of the radial force

x Distance between where the radial force is applied and the shaft shoulder in mm

Figure 13-5 Point of application of radial forces F_R at the shaft extension

The following diagrams indicate the maximum permissible radial force for the corresponding motor frame size. It depends on the force application point and the average speed for a nominal bearing service life (L10h) of 20000 h.

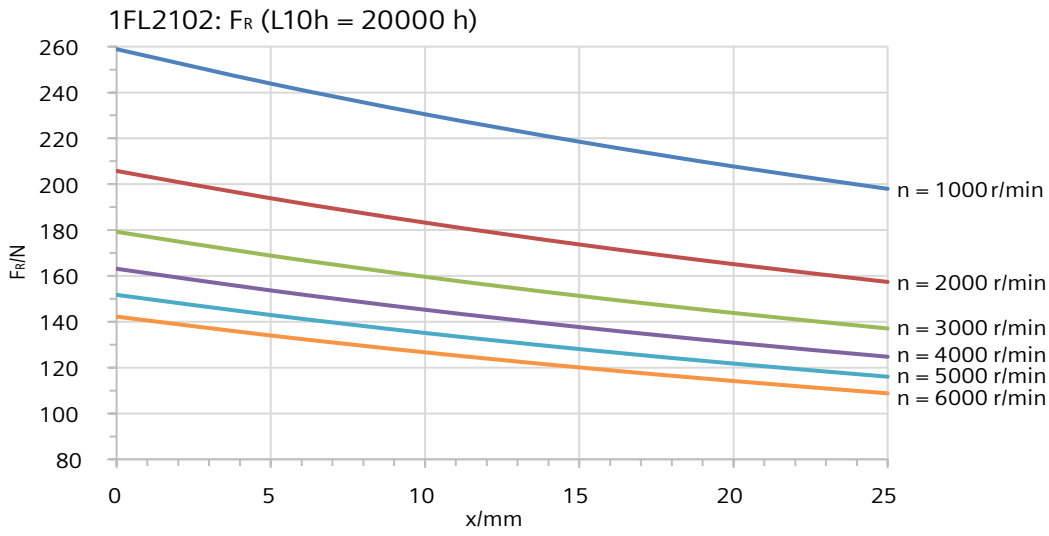

Figure 13-6 Radial force diagram 1FL2102

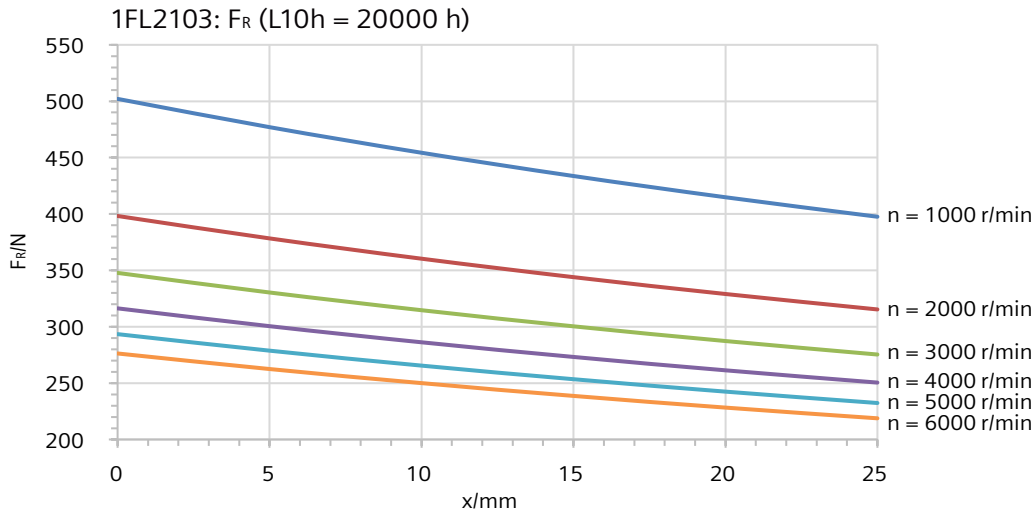

Figure 13-7 Radial force diagram 1FL2103

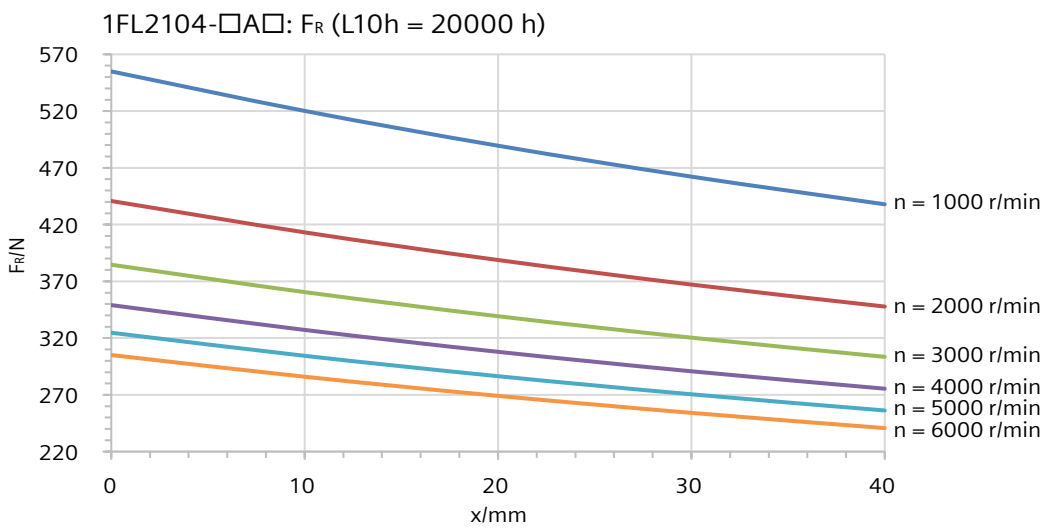

Figure 13-8 Radial force diagram 1FL2104-□A□

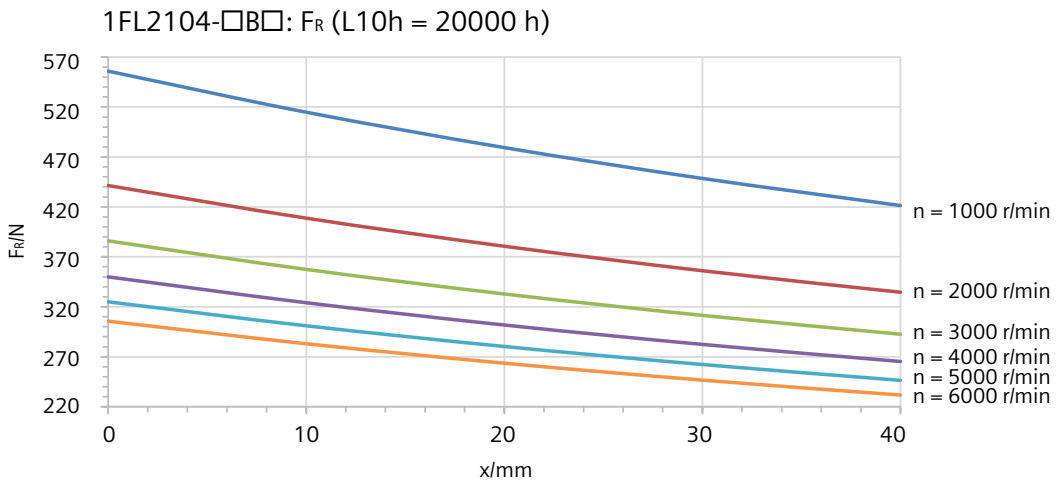

Figure 13-9 Radial force diagram 1FL2104-□B□

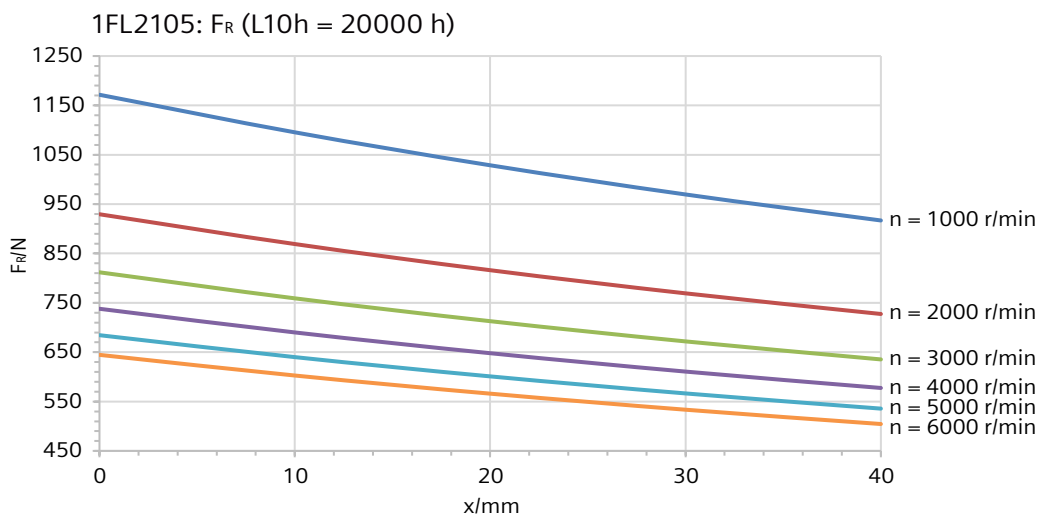

Figure 13-10 Radial force diagram 1FL2105

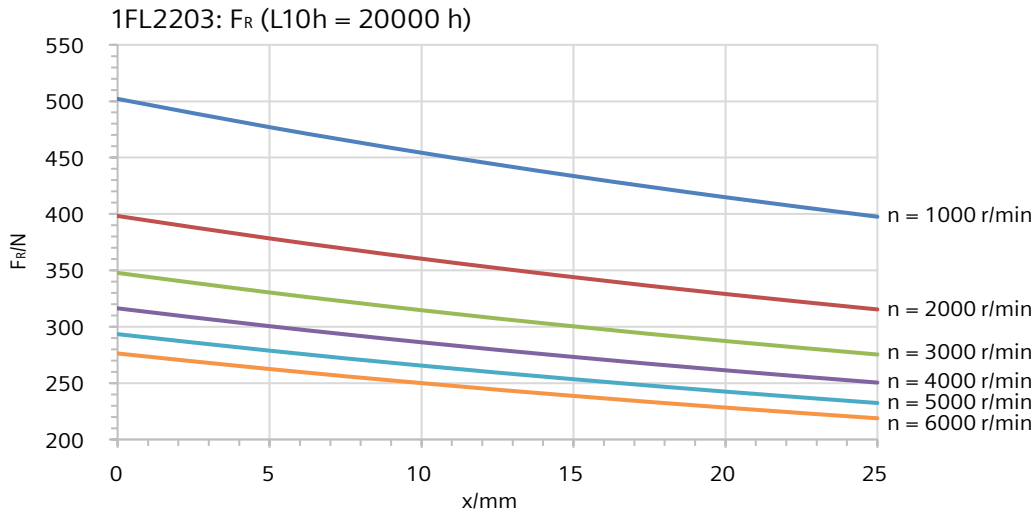

Figure 13-11 Radial force diagram 1FL2203

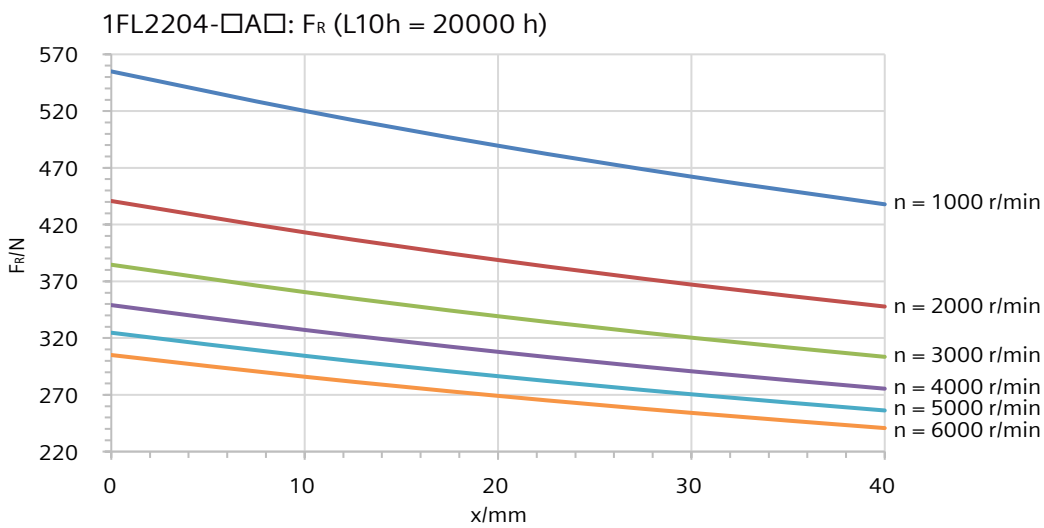

Figure 13-12 Radial force diagram 1FL2204-□A□

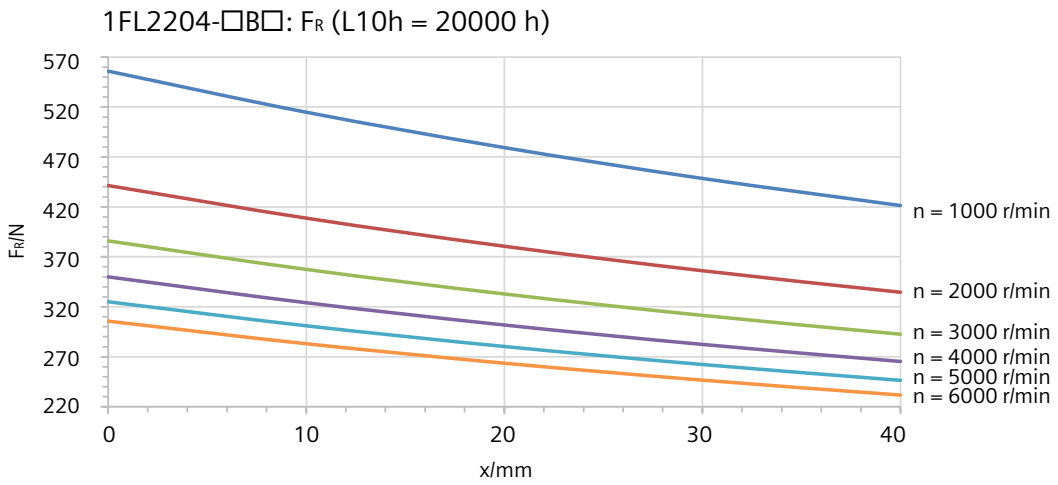

Figure 13-13 Radial force diagram 1FL2204-□B□

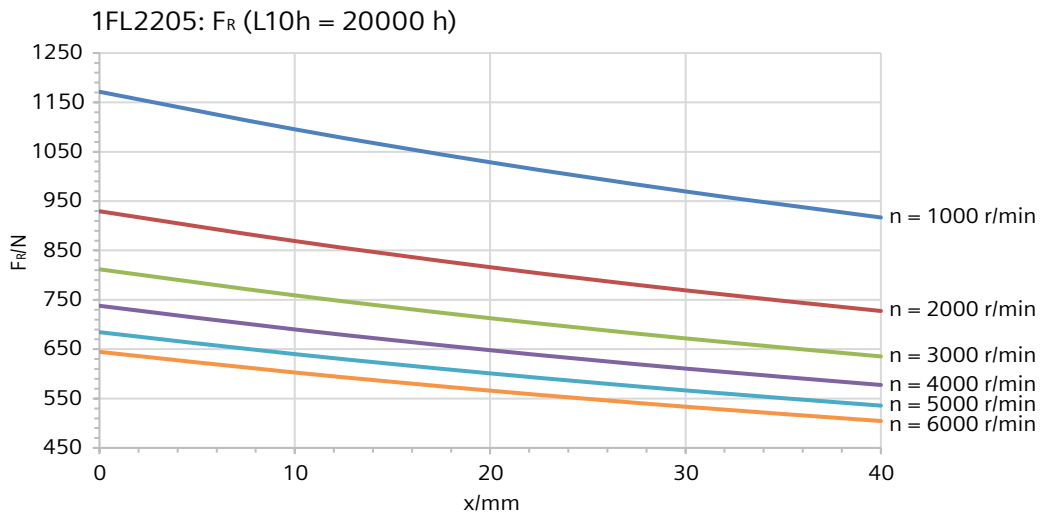

Figure 13-14 Radial force diagram 1FL2205

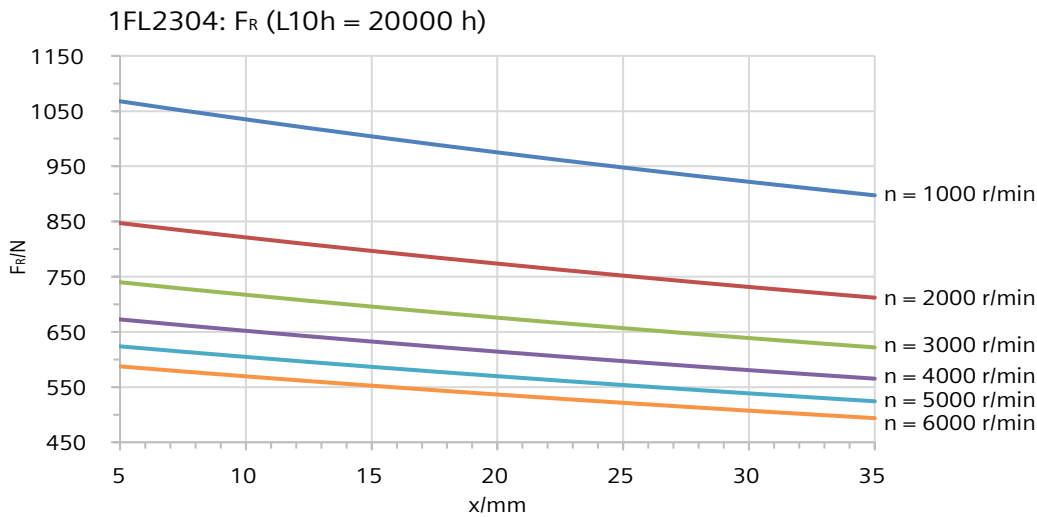

Figure 13-15 Radial force diagram 1FL2304

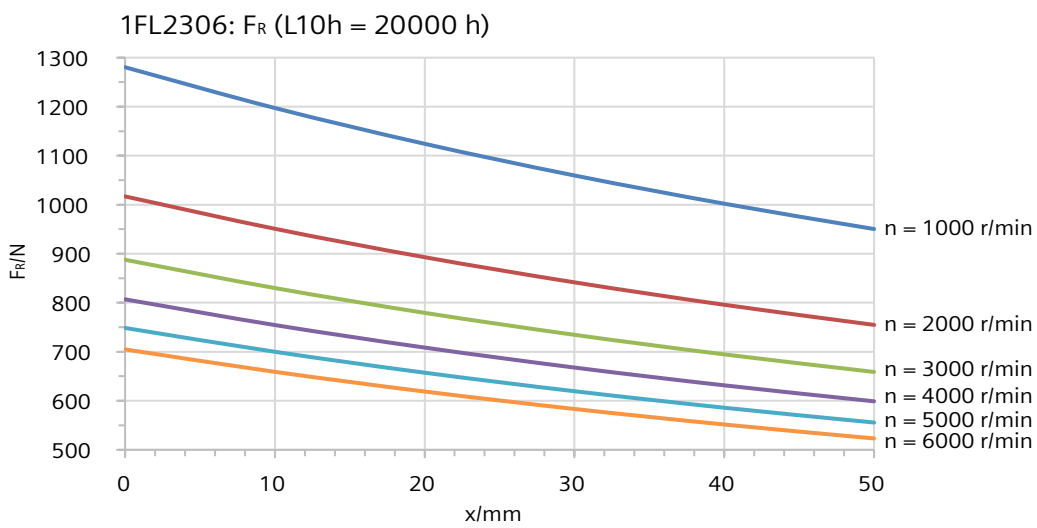

Figure 13-16 Radial force diagram 1FL2306

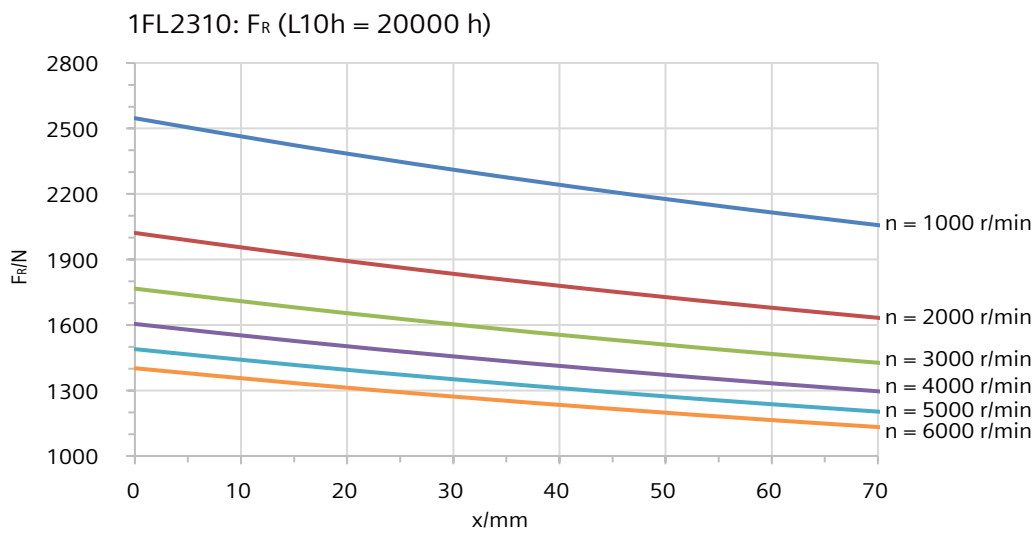

Figure 13-17 Radial force diagram 1FL2310

13.2.12 Available encoders

Technical data

Table 13-26 Encoders that can be ordered for the 1FL2

	Absolute encoder single-turn, 17-bit	Absolute encoder single-turn, 21-bit	Absolute encoder, 21-bit single-turn + 12-bit multiturn
14th position in the Article No. of the motor	H	S	M
Resolution	131072 = 17-bit	2097152 = 21-bit	2097152 = 21-bit
Absolute position	One revolution	One revolution	4096 revolutions (12-bit)
Angle error	± 120"	± 120"	± 120"

13.2.13 Brake data

13.2.13.1 Overview of the 1FL2 holding brake

Description

The holding brake is used to clamp the motor shaft when the motor is at a standstill. The holding brake is not a working brake for braking the rotating motor. When the motor is at a standstill, the holding brake is designed for at least five million switching cycles.

Limited EMERGENCY STOP operation is permissible. Take into account the maximum permissible single operating energy as well as total operating energy (service life) of the brake.

⚠ WARNING

Unintentional movements through inadequate braking effect

If you use the holding brake incorrectly, for example, as an operating brake or you ignore the permissible operating energy of the brake, then the brake will be subject to excessive and impermissible wear. As a consequence, there may be no brake effect. Unintentional movements of the machine or system can result in death or serious injury.

- Observe the permissible number of operating cycles and EMERGENCY STOP properties.
- Operate the motor only in conjunction with an intact brake.
- Avoid repeated brief acceleration of the motor against a holding brake that is still closed.

The holding brakes of the 1FL2 have a torsional backlash of less than 1°.

13.2.13.2 Technical data of the 1FL2 holding brake

Technical data

Table 13-27 Technical data of the holding brake

Motor type	Holding torque	Dynamic braking torque	Opening time	Closing time	Maximum permissible single operating energy[1]	Total operating energy (service life)	Holding current
	M_4 / Nm	M_{1m} / Nm	t_{open_f} / ms	t_{close_f} / ms	W_{max} / J	W_{tot} / kJ	I_h / A
Permanent-magnet brake							
1FL2□05	8	5	90	25	142	284	< 1 A
Spring-loaded brake							
1FL2102	0.32	-	35	10	1	2	< 1 A
1FL2□03	1.3	-	60	10	10	20	< 1 A
1FL2104 1FL2204	3.3	-	110	30	43	86	< 1 A
1FL2304	3.5	-	60	45	140	280	< 2 A
1FL2306	12		180	60	600	1200	< 2 A
1FL2310	33.4	-	220	115	1100	2200	< 2 A

[1] Maximum of three consecutive EMERGENCY STOP procedures. Maximum 25% of all EMERGENCY STOP procedures as high-energy stops with W_{max}.

Holding torque M_4: The holding torque M_4 is the highest permissible torque for the closed brake in steady-state operation without slip (holding function when motor is at standstill). The data applies to the state at operating temperature (120 °C).

Dynamic braking torque M_{1m}: The dynamic braking torque M_{1m} is the smallest mean dynamic braking torque that can occur for an EMERGENCY STOP.

Opening time t_o and closing time t_{cl}: The delay times that occur when switching the brake t_o and t_{cl} are saved in the motor and are automatically taken into consideration. After activation of the holding brake (opening), the speed/velocity setpoint remains at "Zero" during the opening time t_o. The speed/velocity setpoint is only enabled after the opening time t_o has elapsed. After OFF1 or OFF3 and activation of the holding brake (closing), the motor still remains in closed-loop control with speed/velocity setpoint "Zero" during closing time t_{cl}. The pulses are only deleted after this.

Maximum permissible single operating energy W_{max}: The maximum permissible single operating energy of an individual EMERGENCY STOP operation. After an EMERGENCY STOP with the maximum single operating energy, allow a cooling time of at least three minutes before you operate the motor again.

Total operating energy (service life) W_{total}: The total operating energy is the sum of the single operating energy (operating energy for each EMERGENCY STOP procedure). If you exceed the total operating energy, problem-free functioning of the brake can no longer be guaranteed.

Holding current I_h: The holding current I_h keeps the holding brake open. The holding current I_h continues to load the 24 V power supply of the converter after overexcitation until the brake is released.

Formula to calculate the operating energy per braking operation

$W_{br} = (J_{mot\ br} + J_{load}) \bullet n_{mot}^2 / 182.4$

W_{br} / J	Operating energy per braking operation
n_{mot} / r/min	Speed at which the brake is engaged
$J_{mot\ br}$ / kgm²	Rotor moment of inertia of the motor with brake (see Technical data and characteristics of the 1FL2 (Page 592))
J_{load} / kgm²	Load moment of inertia of the mounting part on the motor with brake
182.4	Constant for calculating the circular frequency and SI units

13.2.14 Technical data and characteristics of the 1FL2

13.2.14.1 1FL2102-2AG connected to 1 AC 200 V/3 AC 220 V

Technical data

Table 13-28 Technical data of 1FL2102-2AG

Feature	Symbol	Unit	Value
Static torque	M_0	Nm	0.16
Stall current	I_0	A	0.81
Maximum permissible speed	n_{max}	r/min	6500

Feature	Symbol	Unit	Value
Maximum torque	M_{max}	Nm	0.56
Maximum current	I_{max}	A	3.1
Thermal time constant	T_{th}	min	6.2
Moment of inertia	J_{mot}	$kgcm^2$	0.017
Moment of inertia (with brake)	$J_{mot\ br}$	$kgcm^2$	0.022
Recommended load to motor inertia ratio	-	-	Maximum 40x
Weight	m_{mot}	kg	0.29
Weight (with brake)	$m_{mot\ br}$	kg	0.46
Rated speed	n_{rated}	r/min	3000
Rated torque	M_{rated}	Nm	0.16
Rated current	I_{rated}	A	0.81
Rated power	P_{rated}	kW	0.05

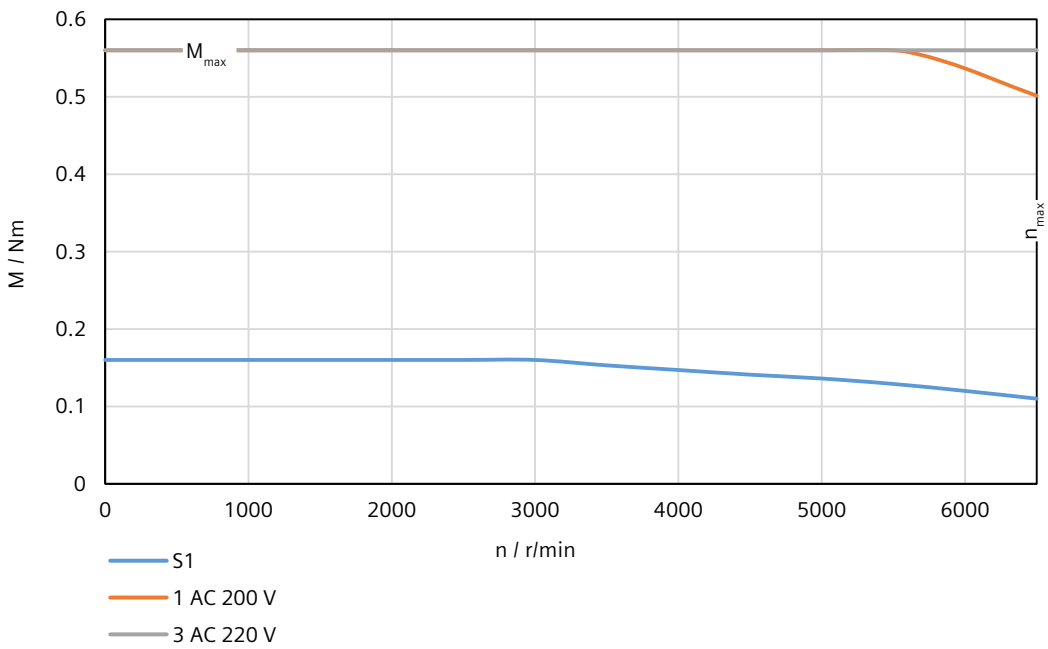

13.2.14.2 1FL2102-4AG connected to 1 AC 200 V/3 AC 220 V

Technical data

Table 13-29 Technical data of 1FL2102-4AG

Feature	Symbol	Unit	Value
Static torque	M_0	Nm	0.32
Stall current	I_0	A	0.76
Maximum permissible speed	n_{max}	r/min	6500
Maximum torque	M_{max}	Nm	1.12
Maximum current	I_{max}	A	2.95
Thermal time constant	T_{th}	min	6.2
Moment of inertia	J_{mot}	$kgcm^2$	0.029
Moment of inertia (with brake)	$J_{mot\ br}$	$kgcm^2$	0.034
Recommended load to motor inertia ratio	-	-	Maximum 30x
Weight	m_{mot}	kg	0.39
Weight (with brake)	$m_{mot\ br}$	kg	0.56
Rated speed	n_{rated}	r/min	3000
Rated torque	M_{rated}	Nm	0.32
Rated current	I_{rated}	A	0.76
Rated power	P_{rated}	kW	0.1

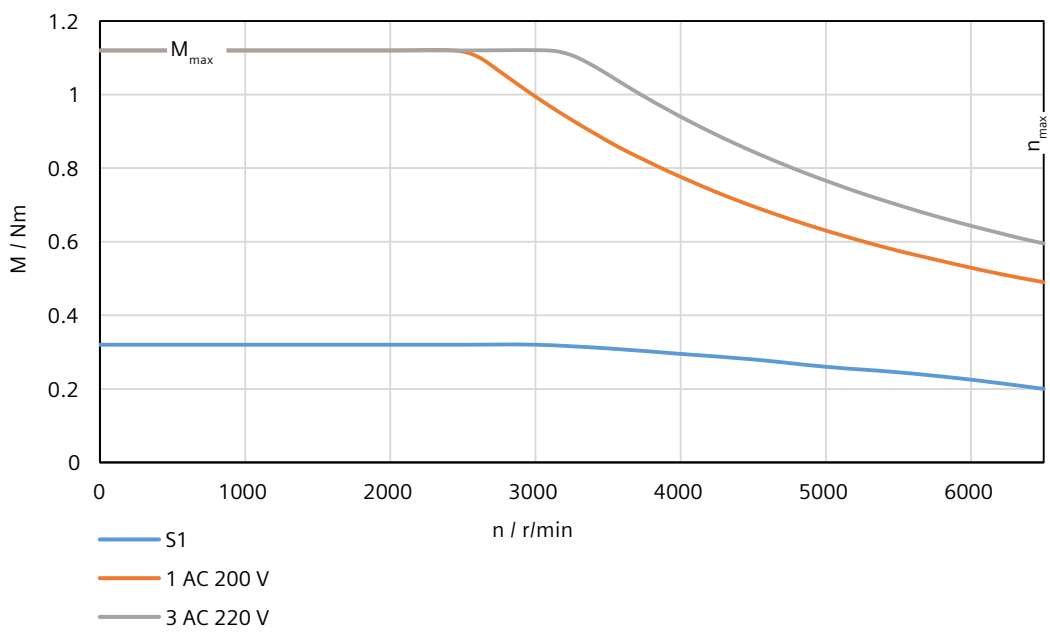

13.2.14.3 1FL2103-2AG connected to 1 AC 200 V/3 AC 220 V

Technical data

Table 13-30 Technical data of 1FL2103-2AG

Feature	Symbol	Unit	Value
Static torque	M_0	Nm	0.64
Stall current	I_0	A	1.28
Maximum permissible speed	n_{max}	r/min	6500
Maximum torque	M_{max}	Nm	2.24
Maximum current	I_{max}	A	4.8
Thermal time constant	T_{th}	min	10.2
Moment of inertia	J_{mot}	$kgcm^2$	0.080
Moment of inertia (with brake)	$J_{mot\ br}$	$kgcm^2$	0.110
Recommended load to motor inertia ratio	-	-	Maximum 30x
Weight	m_{mot}	kg	0.79
Weight (with brake)	$m_{mot\ br}$	kg	1.14
Rated speed	n_{rated}	r/min	3000
Rated torque	M_{rated}	Nm	0.64
Rated current	I_{rated}	A	1.28
Rated power	P_{rated}	kW	0.2

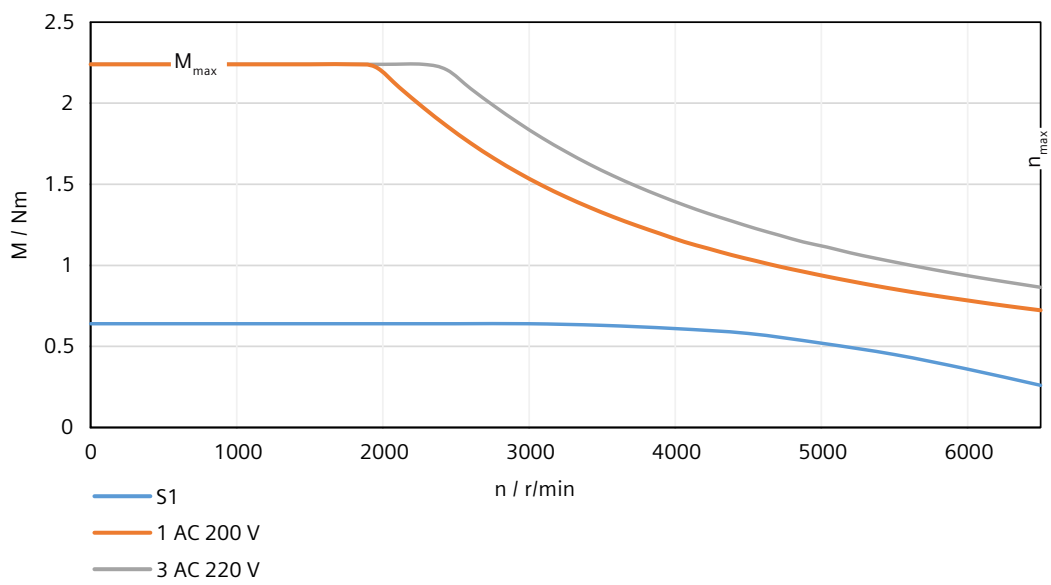

13.2.14.4 1FL2103-4AG connected to 1 AC 200 V/3 AC 220 V

Technical data

Table 13-31 Technical data of 1FL2103-4AG

Feature	Symbol	Unit	Value
Static torque	M_0	Nm	1.27
Stall current	I_0	A	2.4
Maximum permissible speed	n_{max}	r/min	6500
Maximum torque	M_{max}	Nm	4.45
Maximum current	I_{max}	A	8.7
Thermal time constant	T_{th}	min	13
Moment of inertia	J_{mot}	$kgcm^2$	0.155
Moment of inertia (with brake)	$J_{mot\ br}$	$kgcm^2$	0.185
Recommended load to motor inertia ratio	-	-	Maximum 30x
Weight	m_{mot}	kg	1.16
Weight (with brake)	$m_{mot\ br}$	kg	1.5
Rated speed	n_{rated}	r/min	3000
Rated torque	M_{rated}	Nm	1.27
Rated current	I_{rated}	A	2.4
Rated power	P_{rated}	kW	0.4

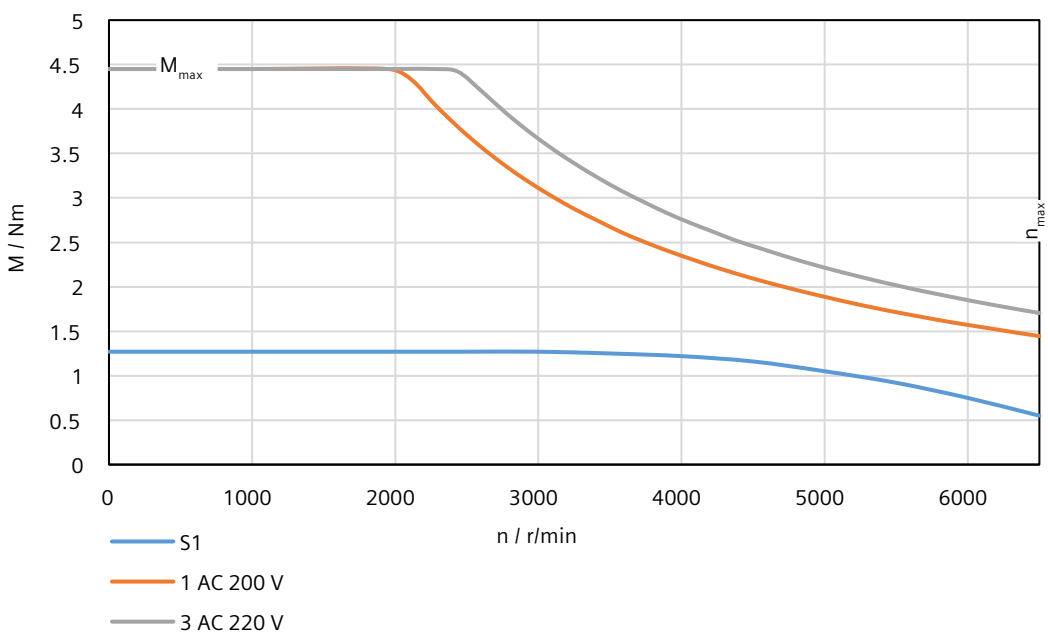

13.2.14.5 1FL2104-2AG connected to 1 AC 200 V/3 AC 220 V

Technical data

Table 13-32 Technical data of 1FL2104-2AG

Feature	Symbol	Unit	Value
Static torque	M_0	Nm	2.4
Stall current	I_0	A	4.4
Maximum permissible speed	n_{max}	r/min	6500
Maximum torque	M_{max}	Nm	8
Maximum current	I_{max}	A	16
Thermal time constant	T_{th}	min	23.4
Moment of inertia	J_{mot}	$kgcm^2$	0.50
Moment of inertia (with brake)	$J_{mot\ br}$	$kgcm^2$	0.58
Recommended load to motor inertia ratio	-	-	Maximum 20x
Weight	m_{mot}	kg	2.7
Weight (with brake)	$m_{mot\ br}$	kg	3.5
Rated speed	n_{rated}	r/min	3000
Rated torque	M_{rated}	Nm	2.4
Rated current	I_{rated}	A	4.4
Rated power	P_{rated}	kW	0.75

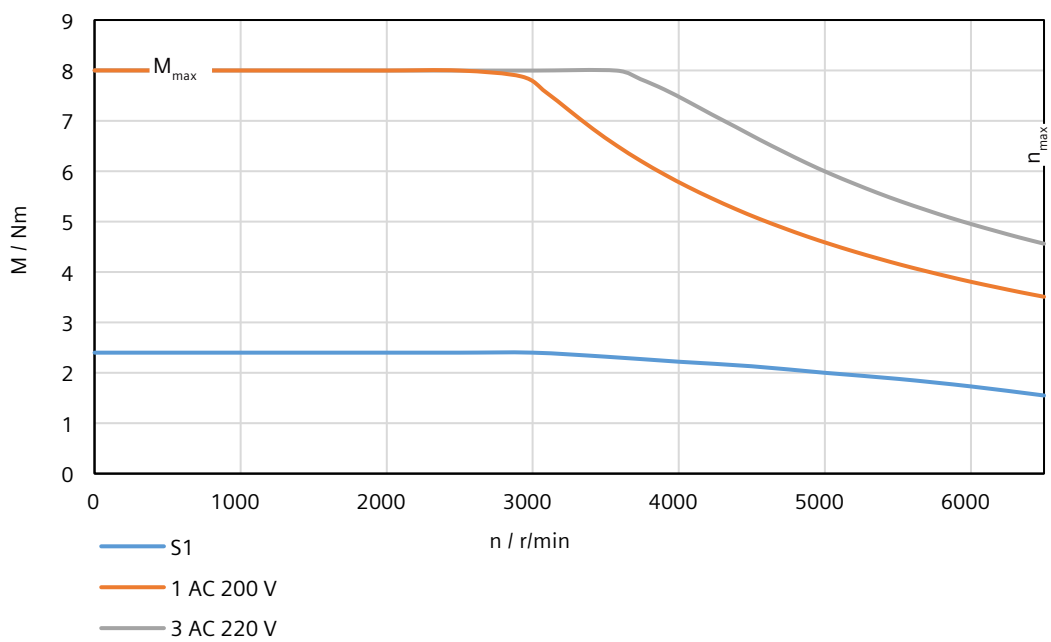

13.2.14.6 1FL2104-4AG connected to 1 AC 200 V/3 AC 220 V

Technical data

Table 13-33 Technical data of 1FL2104-4AG

Feature	Symbol	Unit	Value
Static torque	M_0	Nm	3.2
Stall current	I_0	A	4.4
Maximum permissible speed	n_{max}	r/min	6500
Maximum torque	M_{max}	Nm	10.8
Maximum current	I_{max}	A	16
Thermal time constant	T_{th}	min	29.6
Moment of inertia	J_{mot}	$kgcm^2$	0.63
Moment of inertia (with brake)	$J_{mot\ br}$	$kgcm^2$	0.71
Recommended load to motor inertia ratio	-	-	Maximum 20x
Weight	m_{mot}	kg	3.3
Weight (with brake)	$m_{mot\ br}$	kg	4.1
Rated speed	n_{rated}	r/min	3000
Rated torque	M_{rated}	Nm	3.2
Rated current	I_{rated}	A	4.4
Rated power	P_{rated}	kW	1

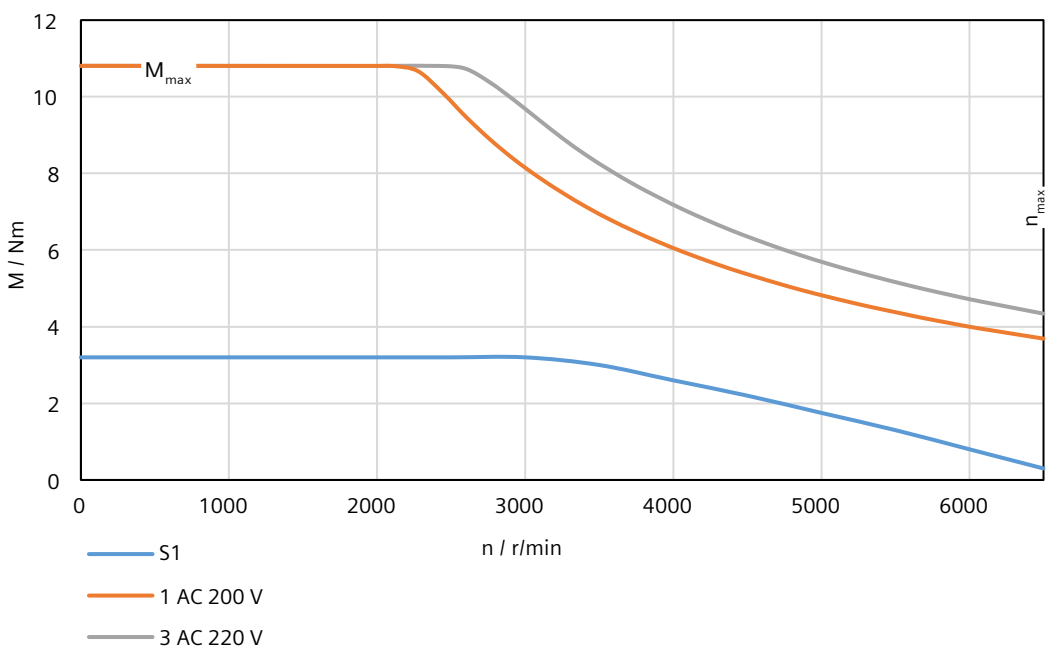

13.2.14.7 1FL2104-2BG connected to 1 AC 200 V/3 AC 220 V

Technical data

Table 13-34 Technical data of 1FL2104-2BG

Feature	Symbol	Unit	Value
Static torque	M_0	Nm	2.4
Stall current	I_0	A	4.2
Maximum permissible speed	n_{max}	r/min	6500
Maximum torque	M_{max}	Nm	8.4
Maximum current	I_{max}	A	16
Thermal time constant	T_{th}	min	10
Moment of inertia	J_{mot}	$kgcm^2$	0.67
Moment of inertia (with brake)	$J_{mot\ br}$	$kgcm^2$	0.77
Recommended load to motor inertia ratio	-	-	Maximum 20x
Weight	m_{mot}	kg	2.0
Weight (with brake)	$m_{mot\ br}$	kg	2.8
Rated speed	n_{rated}	r/min	3000
Rated torque	M_{rated}	Nm	2.4
Rated current	I_{rated}	A	4.2
Rated power	P_{rated}	kW	0.75

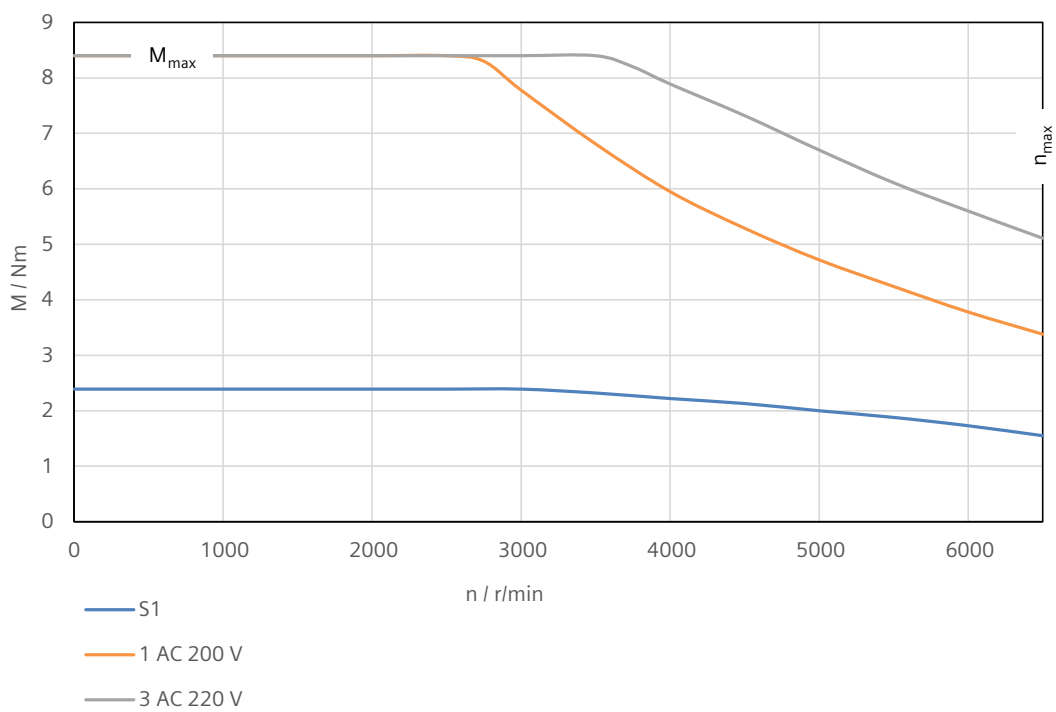

13.2.14.8 1FL2104-4BG connected to 1 AC 200 V/3 AC 220 V

Technical data

Table 13-35 Technical data of 1FL2104-4BG

Feature	Symbol	Unit	Value
Static torque	M_0	Nm	3.2
Stall current	I_0	A	4.4
Maximum permissible speed	n_{max}	r/min	6500
Maximum torque	M_{max}	Nm	11.2
Maximum current	I_{max}	A	16
Thermal time constant	T_{th}	min	12
Moment of inertia	J_{mot}	$kgcm^2$	0.87
Moment of inertia (with brake)	$J_{mot\ br}$	$kgcm^2$	0.97
Recommended load to motor inertia ratio	-	-	Maximum 20x
Weight	m_{mot}	kg	2.4
Weight (with brake)	$m_{mot\ br}$	kg	3.2
Rated speed	n_{rated}	r/min	3000
Rated torque	M_{rated}	Nm	3.2
Rated current	I_{rated}	A	4.4
Rated power	P_{rated}	kW	1

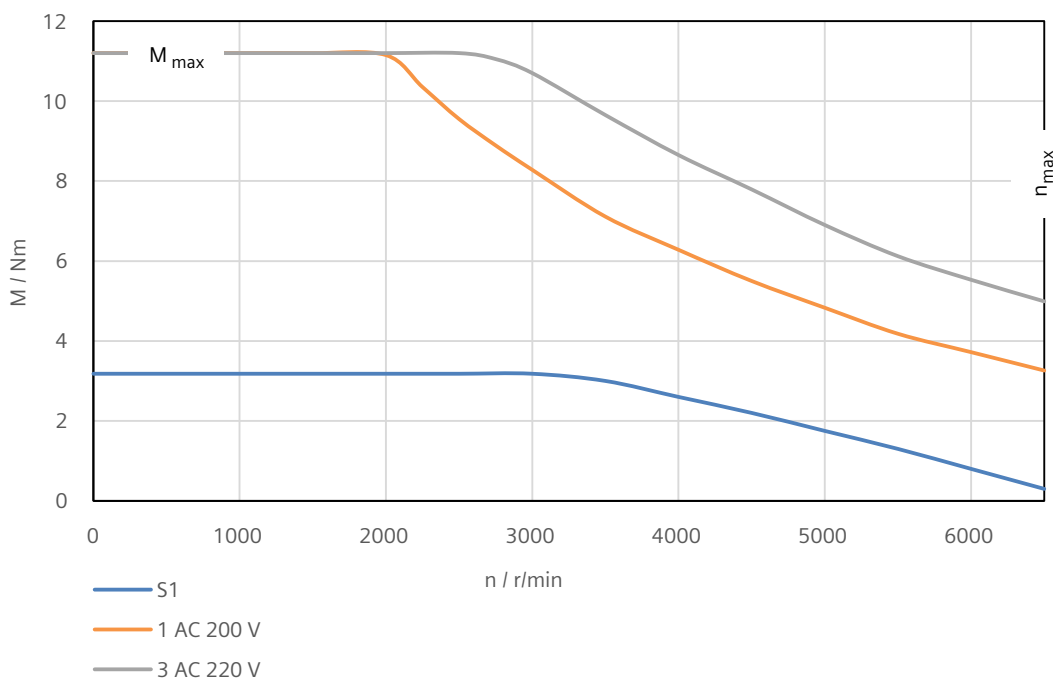

13.2.14.9 1FL2102-2AF connected to 3 AC 380 V/3 AC 400 V

Technical data

Table 13-36 Technical data of 1FL2102-2AF

Feature	Symbol	Unit	Value
Static torque	M_0	Nm	0.16
Stall current	I_0	A	0.84
Maximum permissible speed	n_{max}	r/min	6500
Maximum torque	M_{max}	Nm	0.56
Maximum current	I_{max}	A	3.4
Thermal time constant	T_{th}	min	4.8
Moment of inertia	J_{mot}	$kgcm^2$	0.017
Moment of inertia (with brake)	$J_{mot\ br}$	$kgcm^2$	0.022
Recommended load to motor inertia ratio	-	-	Maximum 40x
Weight	m_{mot}	kg	0.29
Weight (with brake)	$m_{mot\ br}$	kg	0.45
Rated speed	n_{rated}	r/min	3000
Rated torque	M_{rated}	Nm	0.16
Rated current	I_{rated}	A	0.84
Rated power	P_{rated}	kW	0.05

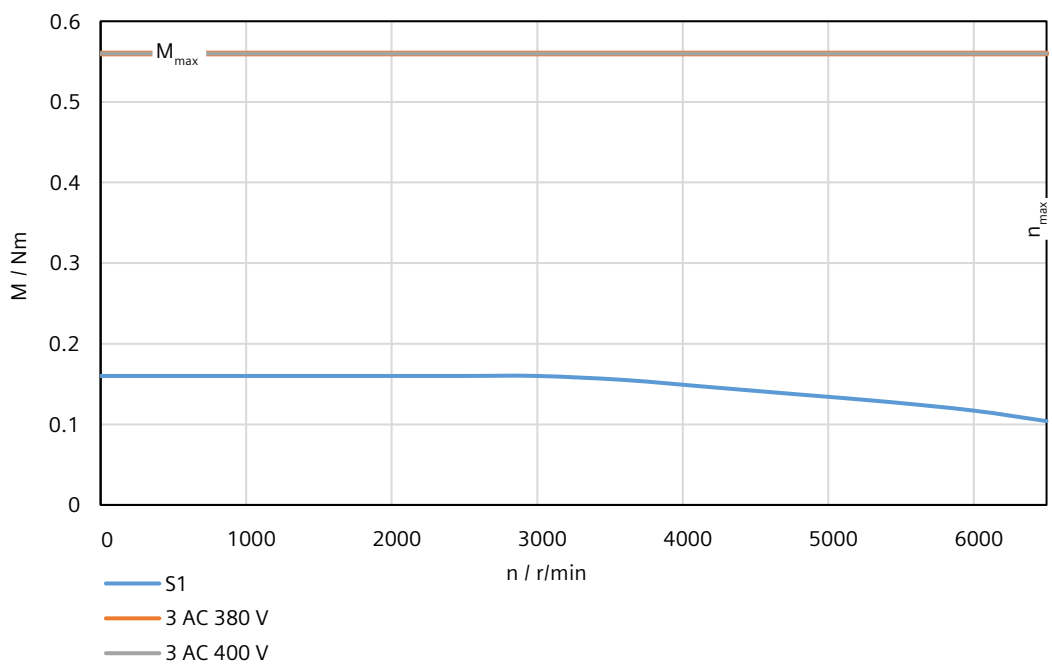

13.2.14.10 1FL2102-4AF connected to 3 AC 380 V/3 AC 400 V

Technical data

Table 13-37 Technical data of 1FL2102-4AF

Feature	Symbol	Unit	Value
Static torque	M_0	Nm	0.32
Stall current	I_0	A	0.81
Maximum permissible speed	n_{max}	r/min	6500
Maximum torque	M_{max}	Nm	1.12
Maximum current	I_{max}	A	2.9
Thermal time constant	T_{th}	min	4.6
Moment of inertia	J_{mot}	$kgcm^2$	0.029
Moment of inertia (with brake)	$J_{mot\ br}$	$kgcm^2$	0.034
Recommended load to motor inertia ratio	-	-	Maximum 30x
Weight	m_{mot}	kg	0.38
Weight (with brake)	$m_{mot\ br}$	kg	0.55
Rated speed	n_{rated}	r/min	3000
Rated torque	M_{rated}	Nm	0.32
Rated current	I_{rated}	A	0.81
Rated power	P_{rated}	kW	0.1

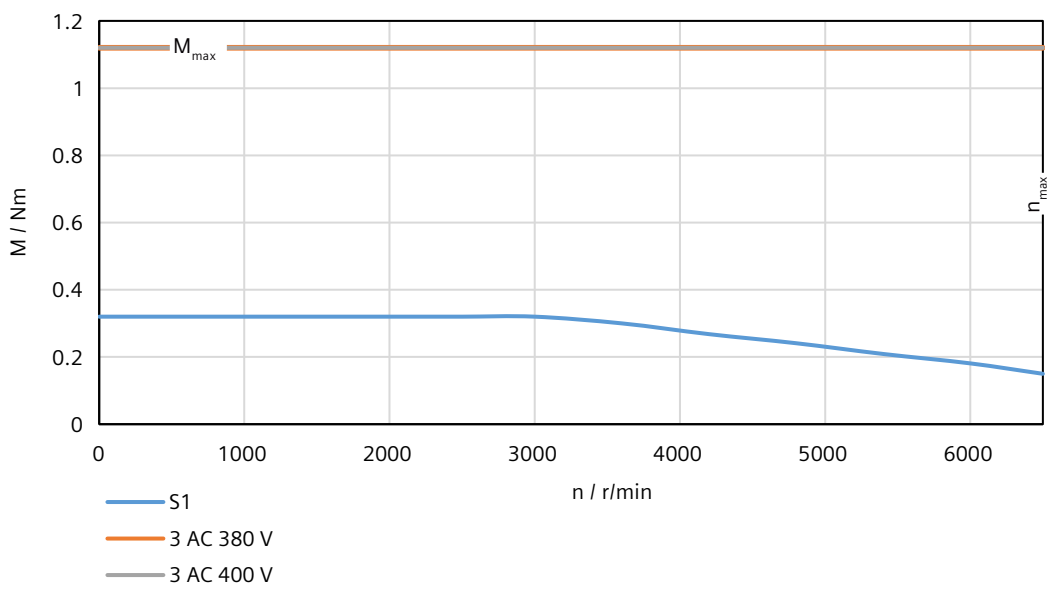

13.2.14.11 1FL2103-2AF connected to 3 AC 380 V/3 AC 400 V

Technical data

Table 13-38 Technical data of 1FL2103-2AF

Feature	Symbol	Unit	Value
Static torque	M_0	Nm	0.64
Stall current	I_0	A	1.3
Maximum permissible speed	n_{max}	r/min	6500
Maximum torque	M_{max}	Nm	2.24
Maximum current	I_{max}	A	4.8
Thermal time constant	T_{th}	min	8.1
Moment of inertia	J_{mot}	$kgcm^2$	0.080
Moment of inertia (with brake)	$J_{mot\ br}$	$kgcm^2$	0.110
Recommended load to motor inertia ratio	-	-	Maximum 30x
Weight	m_{mot}	kg	0.78
Weight (with brake)	$m_{mot\ br}$	kg	1.12
Rated speed	n_{rated}	r/min	3000
Rated torque	M_{rated}	Nm	0.64
Rated current	I_{rated}	A	1.3
Rated power	P_{rated}	kW	0.2

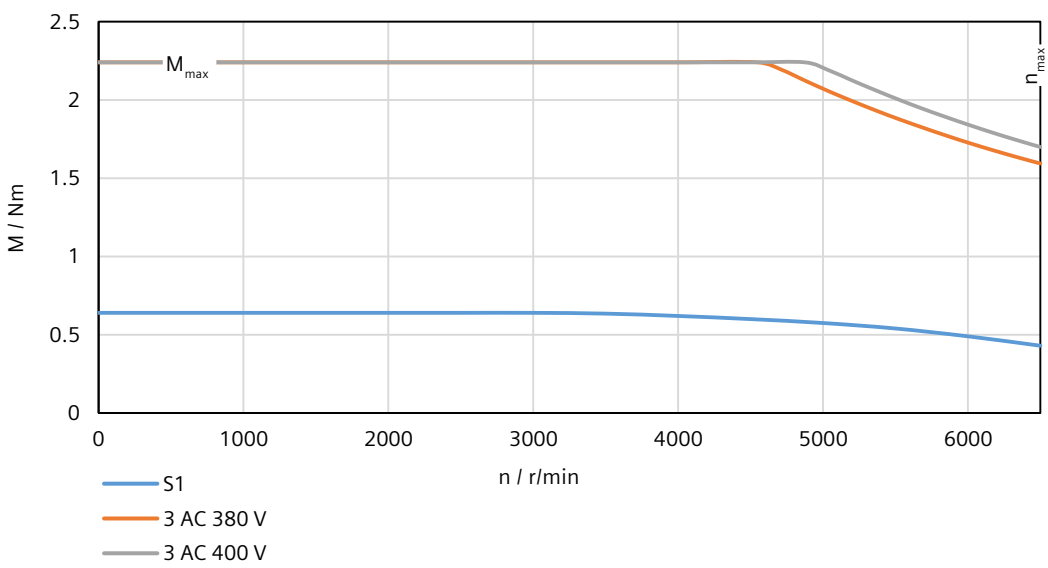

13.2.14.12 1FL2103-4AF connected to 3 AC 380 V/3 AC 400 V

Technical data

Table 13-39 Technical data of 1FL2103-4AF

Feature	Symbol	Unit	Value
Static torque	M_0	Nm	1.27
Stall current	I_0	A	1.3
Maximum permissible speed	n_{max}	r/min	6500
Maximum torque	M_{max}	Nm	4.45
Maximum current	I_{max}	A	4.8
Thermal time constant	T_{th}	min	9.3
Moment of inertia	J_{mot}	$kgcm^2$	0.155
Moment of inertia (with brake)	$J_{mot\ br}$	$kgcm^2$	0.185
Recommended load to motor inertia ratio	-	-	Maximum 30x
Weight	m_{mot}	kg	1.14
Weight (with brake)	$m_{mot\ br}$	kg	1.49
Rated speed	n_{rated}	r/min	3000
Rated torque	M_{rated}	Nm	1.27
Rated current	I_{rated}	A	1.3
Rated power	P_{rated}	kW	0.4

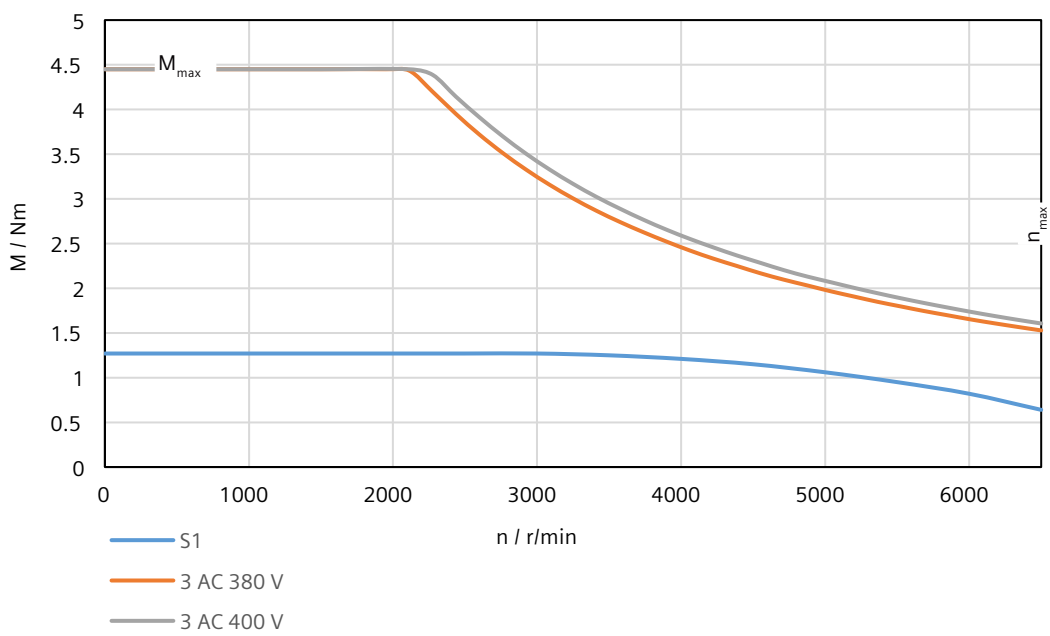

13.2.14.13 1FL2104-2AF connected to 3 AC 380 V/3 AC 400 V

Technical data

Table 13-40 Technical data of 1FL2104-2AF

Feature	Symbol	Unit	Value
Static torque	M_0	Nm	2.4
Stall current	I_0	A	2.1
Maximum permissible speed	n_{max}	r/min	6500
Maximum torque	M_{max}	Nm	8
Maximum current	I_{max}	A	7.6
Thermal time constant	T_{th}	min	23.3
Moment of inertia	J_{mot}	$kgcm^2$	0.50
Moment of inertia (with brake)	$J_{mot\ br}$	$kgcm^2$	0.58
Recommended load to motor inertia ratio	-	-	Maximum 20x
Weight	m_{mot}	kg	2.7
Weight (with brake)	$m_{mot\ br}$	kg	3.5
Rated speed	n_{rated}	r/min	3000
Rated torque	M_{rated}	Nm	2.4
Rated current	I_{rated}	A	2.1
Rated power	P_{rated}	kW	0.75

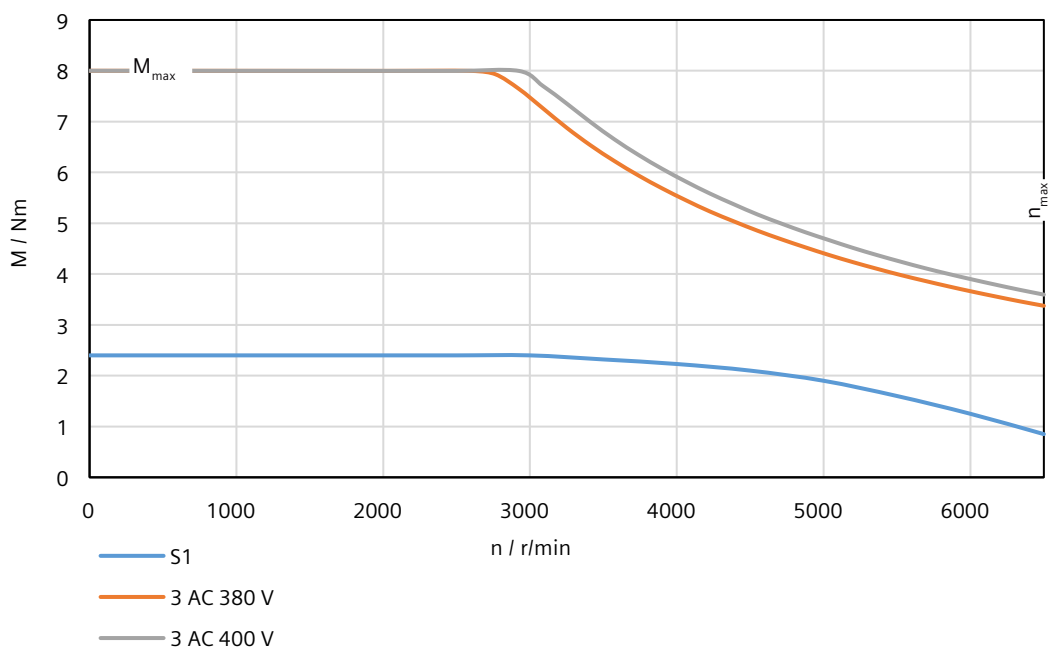

13.2.14.14 1FL2104-4AF connected to 3 AC 380 V/3 AC 400 V

Technical data

Table 13-41 Technical data of 1FL2104-4AF

Feature	Symbol	Unit	Value
Static torque	M_0	Nm	3.2
Stall current	I_0	A	3
Maximum permissible speed	n_{max}	r/min	6500
Maximum torque	M_{max}	Nm	10.8
Maximum current	I_{max}	A	10.9
Thermal time constant	T_{th}	min	25.4
Moment of inertia	J_{mot}	$kgcm^2$	0.63
Moment of inertia (with brake)	$J_{mot\ br}$	$kgcm^2$	0.71
Recommended load to motor inertia ratio	-	-	Maximum 20x
Weight	m_{mot}	kg	3.3
Weight (with brake)	$m_{mot\ br}$	kg	4.1
Rated speed	n_{rated}	r/min	3000
Rated torque	M_{rated}	Nm	3.2
Rated current	I_{rated}	A	3
Rated power	P_{rated}	kW	1

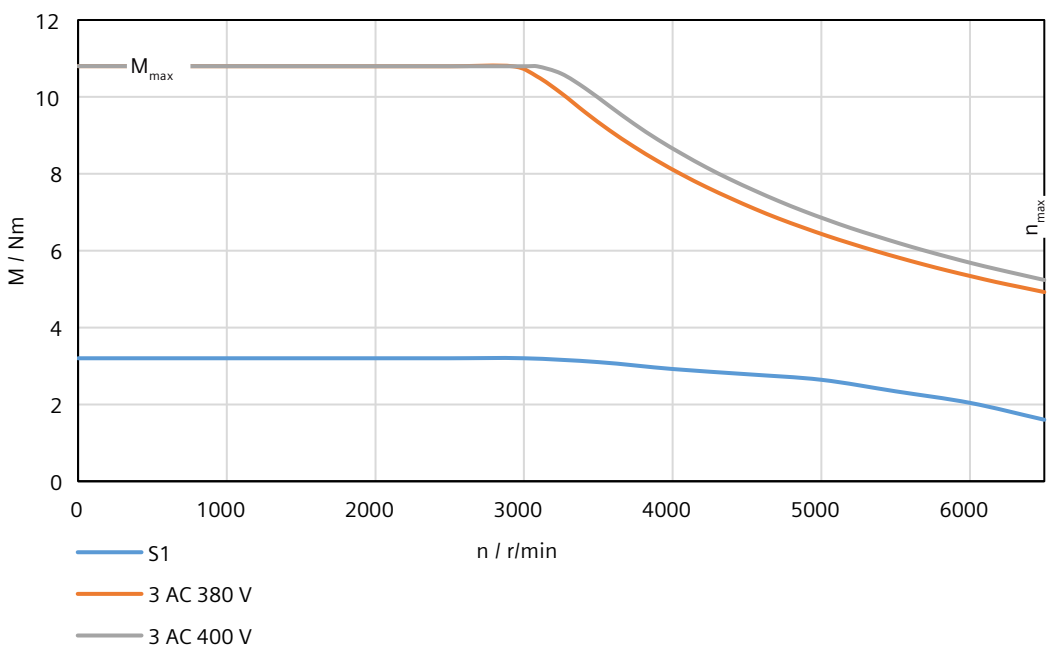

13.2.14.15 1FL2104-2BF connected to 3 AC 380 V/3 AC 400 V

Technical data

Table 13-42 Technical data of 1FL2104-2BF

Feature	Symbol	Unit	Value
Static torque	M_0	Nm	2.4
Stall current	I_0	A	2.4
Maximum permissible speed	n_{max}	r/min	6500
Maximum torque	M_{max}	Nm	8.4
Maximum current	I_{max}	A	9.3
Thermal time constant	T_{th}	min	10
Moment of inertia	J_{mot}	$kgcm^2$	0.67
Moment of inertia (with brake)	$J_{mot\ br}$	$kgcm^2$	0.77
Recommended load to motor inertia ratio	-	-	Maximum 20x
Weight	m_{mot}	kg	2.0
Weight (with brake)	$m_{mot\ br}$	kg	2.8
Rated speed	n_{rated}	r/min	3000
Rated torque	M_{rated}	Nm	2.4
Rated current	I_{rated}	A	2.4
Rated power	P_{rated}	kW	0.75

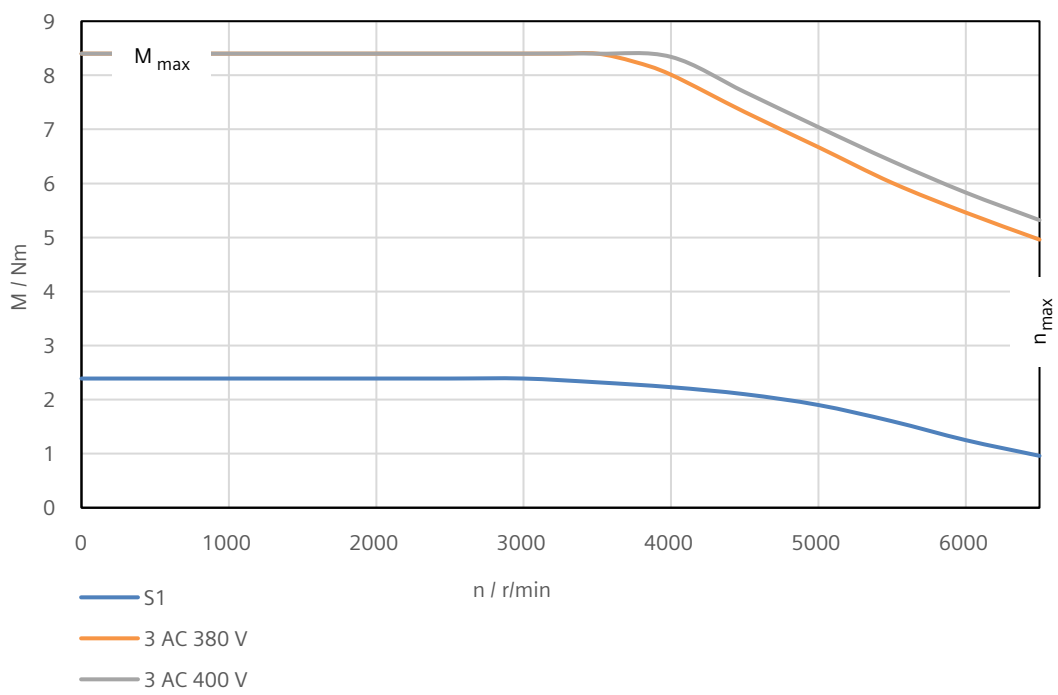

13.2.14.16 1FL2104-4BF connected to 3 AC 380 V/3 AC 400 V

Technical data

Table 13-43 Technical data of 1FL2104-4BF

Feature	Symbol	Unit	Value
Static torque	M_0	Nm	3.2
Stall current	I_0	A	3
Maximum permissible speed	n_{max}	r/min	6500
Maximum torque	M_{max}	Nm	11.2
Maximum current	I_{max}	A	10.9
Thermal time constant	T_{th}	min	11
Moment of inertia	J_{mot}	$kgcm^2$	0.87
Moment of inertia (with brake)	$J_{mot\ br}$	$kgcm^2$	0.97
Recommended load to motor inertia ratio	-	-	Maximum 20x
Weight	m_{mot}	kg	2.4
Weight (with brake)	$m_{mot\ br}$	kg	3.2
Rated speed	n_{rated}	r/min	3000
Rated torque	M_{rated}	Nm	3.2
Rated current	I_{rated}	A	3
Rated power	P_{rated}	kW	1

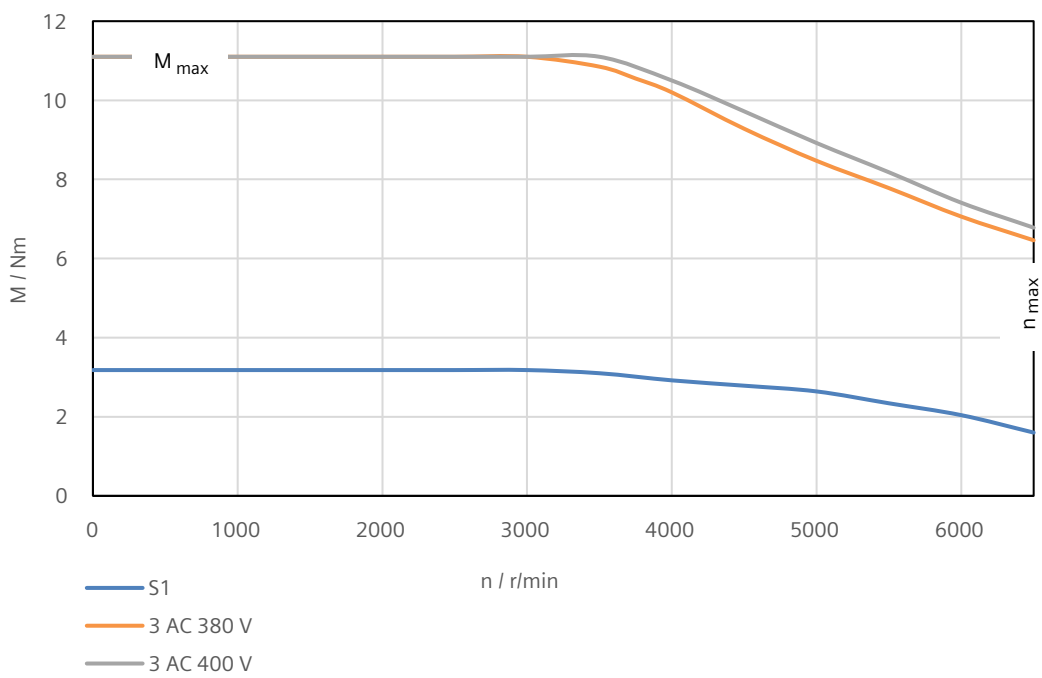

13.2.14.17 1FL2105-2AF connected to 3 AC 380 V/3 AC 400 V

Technical data

Table 13-44 Technical data of 1FL2105-2AF

Feature	Symbol	Unit	Value
Static torque	M_0	Nm	5
Stall current	I_0	A	4.65
Maximum permissible speed	n_{max}	r/min	6000
Maximum torque	M_{max}	Nm	15.9
Maximum current	I_{max}	A	18
Thermal time constant	T_{th}	min	37
Moment of inertia	J_{mot}	$kgcm^2$	1.71
Moment of inertia (with brake)	$J_{mot\ br}$	$kgcm^2$	2.54
Recommended load to motor inertia ratio	-	-	Maximum 20x
Weight	m_{mot}	kg	5.5
Weight (with brake)	$m_{mot\ br}$	kg	6.4
Rated speed	n_{rated}	r/min	3000
Rated torque	M_{rated}	Nm	4.6
Rated current	I_{rated}	A	4.35
Rated power	P_{rated}	kW	1.45

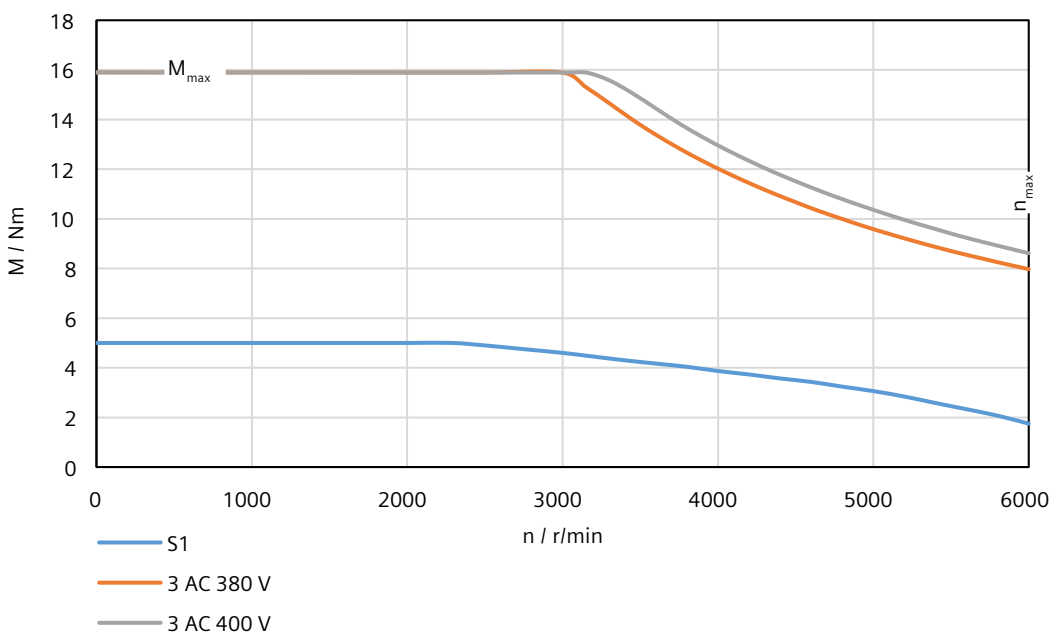

13.2.14.18 1FL2105-4AF connected to 3 AC 380 V/3 AC 400 V

Technical data

Table 13-45 Technical data of 1FL2105-4AF

Feature	Symbol	Unit	Value
Static torque	M_0	Nm	8
Stall current	I_0	A	6.7
Maximum permissible speed	n_{max}	r/min	6000
Maximum torque	M_{max}	Nm	25.3
Maximum current	I_{max}	A	24
Thermal time constant	T_{th}	min	42.9
Moment of inertia	J_{mot}	$kgcm^2$	2.65
Moment of inertia (with brake)	$J_{mot\ br}$	$kgcm^2$	3.48
Recommended load to motor inertia ratio	-	-	Maximum 15x
Weight	m_{mot}	kg	7.8
Weight (with brake)	$m_{mot\ br}$	kg	8.7
Rated speed	n_{rated}	r/min	3000
Rated torque	M_{rated}	Nm	6.6
Rated current	I_{rated}	A	5.6
Rated power	P_{rated}	kW	2.1

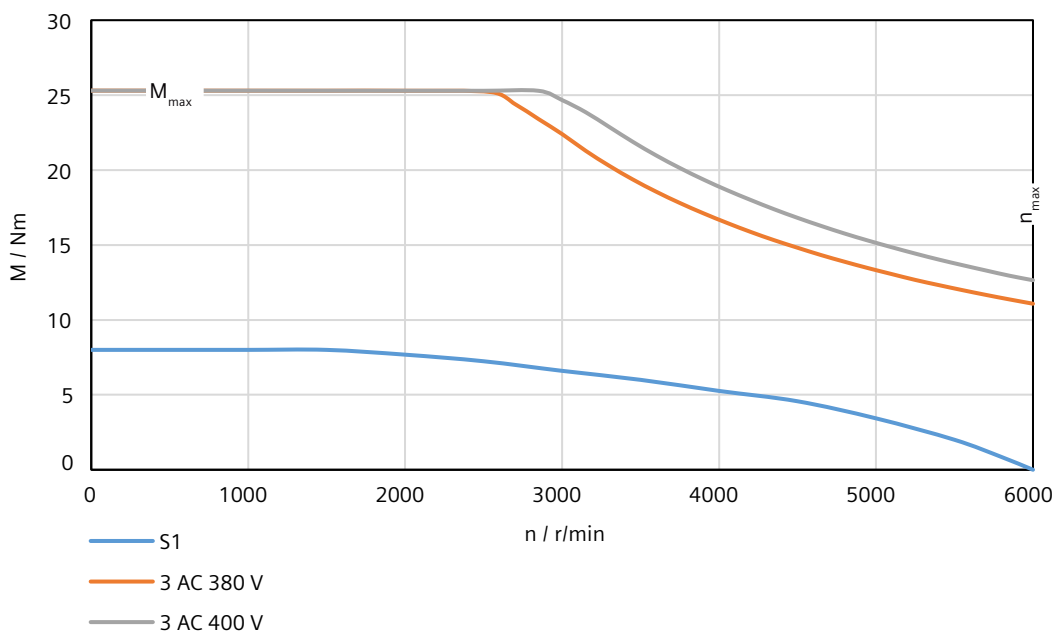

13.2.14.19 1FL2203-2AG connected to 1 AC 200 V/3 AC 220 V

Technical data

Table 13-46 Technical data of 1FL2203-2AG

Feature	Symbol	Unit	Value
Static torque	M_0	Nm	0.64
Stall current	I_0	A	1.33
Maximum permissible speed	n_{max}	r/min	6500
Maximum torque	M_{max}	Nm	2.24
Maximum current	I_{max}	A	4.8
Thermal time constant	T_{th}	min	11.5
Moment of inertia	J_{mot}	$kgcm^2$	0.180
Moment of inertia (with brake)	$J_{mot\ br}$	$kgcm^2$	0.210
Recommended load to motor inertia ratio	-	-	Maximum 30x
Weight	m_{mot}	kg	0.76
Weight (with brake)	$m_{mot\ br}$	kg	1.11
Rated speed	n_{rated}	r/min	3000
Rated torque	M_{rated}	Nm	0.64
Rated current	I_{rated}	A	1.33
Rated power	P_{rated}	kW	0.2

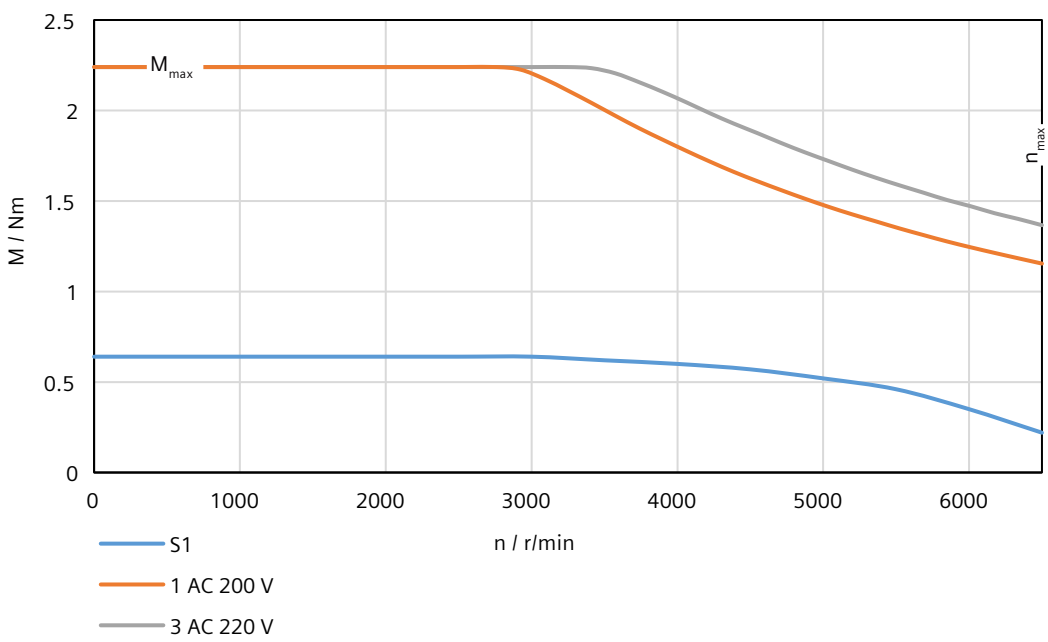

13.2.14.20 1FL2203-4AG connected to 1 AC 200 V/3 AC 220 V

Technical data

Table 13-47 Technical data of 1FL2203-4AG

Feature	Symbol	Unit	Value
Static torque	M_0	Nm	1.27
Stall current	I_0	A	2.4
Maximum permissible speed	n_{max}	r/min	6500
Maximum torque	M_{max}	Nm	4.45
Maximum current	I_{max}	A	8.7
Thermal time constant	T_{th}	min	12.8
Moment of inertia	J_{mot}	$kgcm^2$	0.350
Moment of inertia (with brake)	$J_{mot\ br}$	$kgcm^2$	0.380
Recommended load to motor inertia ratio	-	-	Maximum 30x
Weight	m_{mot}	kg	1.11
Weight (with brake)	$m_{mot\ br}$	kg	1.46
Rated speed	n_{rated}	r/min	3000
Rated torque	M_{rated}	Nm	1.27
Rated current	I_{rated}	A	2.4
Rated power	P_{rated}	kW	0.4

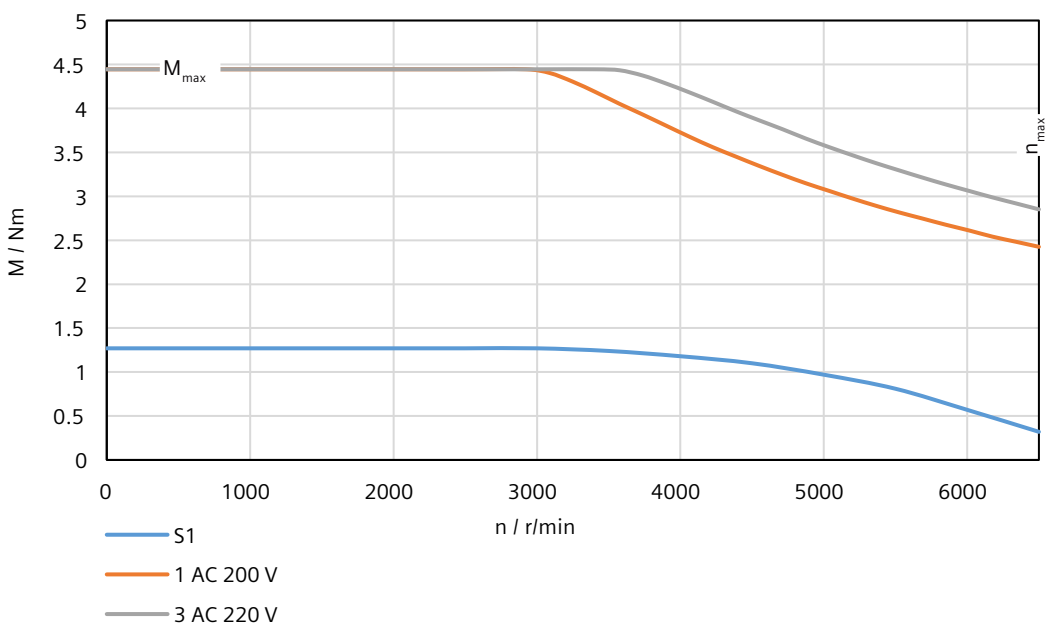

13.2.14.21 1FL2204-2AG connected to 1 AC 200 V/3 AC 220 V

Technical data

Table 13-48 Technical data of 1FL2204-2AG

Feature	Symbol	Unit	Value
Static torque	M_0	Nm	2.4
Stall current	I_0	A	4.4
Maximum permissible speed	n_{max}	r/min	6500
Maximum torque	M_{max}	Nm	7.5
Maximum current	I_{max}	A	14.2
Thermal time constant	T_{th}	min	25.1
Moment of inertia	J_{mot}	$kgcm^2$	1.23
Moment of inertia (with brake)	$J_{mot\ br}$	$kgcm^2$	1.31
Recommended load to motor inertia ratio	-	-	Maximum 15x
Weight	m_{mot}	kg	2.6
Weight (with brake)	$m_{mot\ br}$	kg	3.4
Rated speed	n_{rated}	r/min	3000
Rated torque	M_{rated}	Nm	2.4
Rated current	I_{rated}	A	4.4
Rated power	P_{rated}	kW	0.75

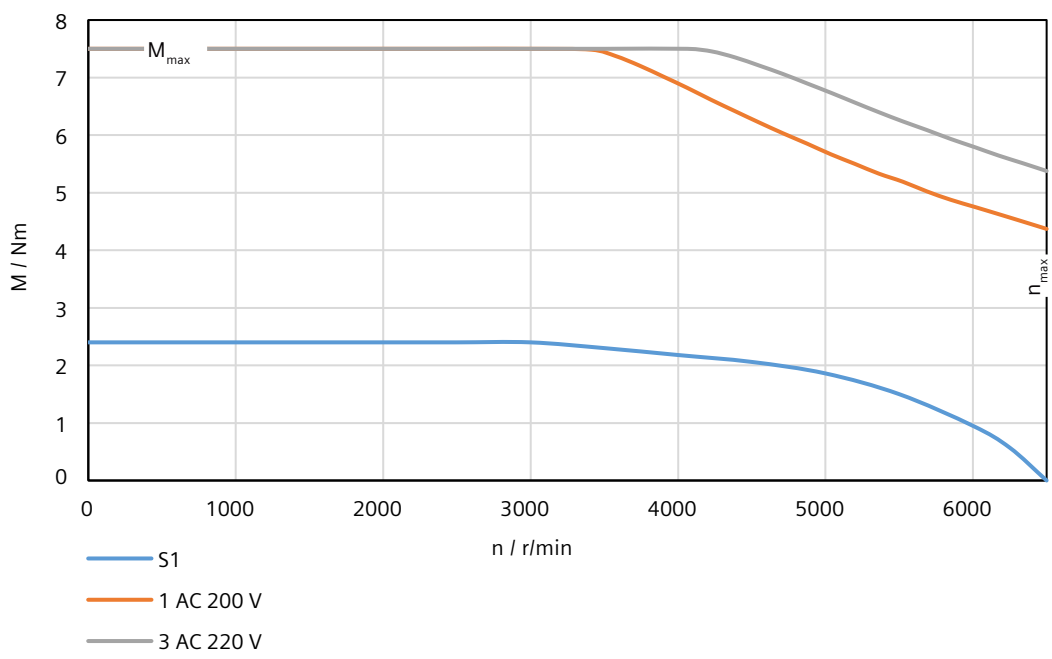

13.2.14.22 1FL2204-4AG connected to 1 AC 200 V/3 AC 220 V

Technical data

Table 13-49 Technical data of 1FL2204-4AG

Feature	Symbol	Unit	Value
Static torque	M_0	Nm	3.2
Stall current	I_0	A	4.4
Maximum permissible speed	n_{max}	r/min	6500
Maximum torque	M_{max}	Nm	11.3
Maximum current	I_{max}	A	16
Thermal time constant	T_{th}	min	24.1
Moment of inertia	J_{mot}	$kgcm^2$	1.61
Moment of inertia (with brake)	$J_{mot\ br}$	$kgcm^2$	1.69
Recommended load to motor inertia ratio	-	-	Maximum 15x
Weight	m_{mot}	kg	3.1
Weight (with brake)	$m_{mot\ br}$	kg	3.9
Rated speed	n_{rated}	r/min	3000
Rated torque	M_{rated}	Nm	3.2
Rated current	I_{rated}	A	4.4
Rated power	P_{rated}	kW	1

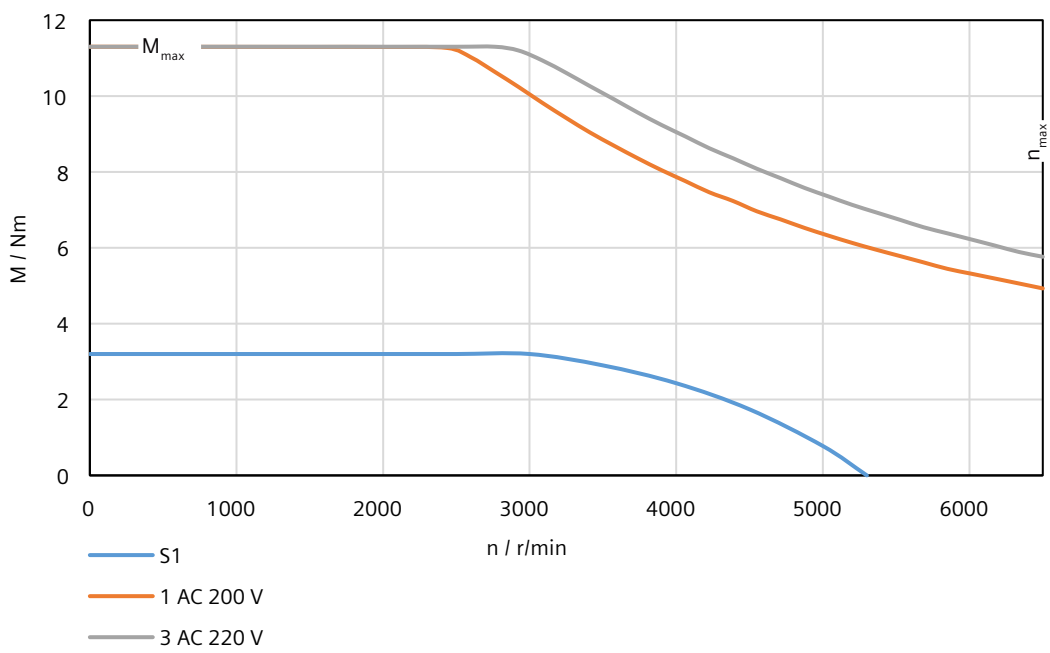

13.2.14.23 1FL2204-2BG connected to 1 AC 200 V/3 AC 220 V

Technical data

Table 13-50 Technical data of 1FL2204-2BG

Feature	Symbol	Unit	Value
Static torque	M_0	Nm	2.4
Stall current	I_0	A	4.4
Maximum permissible speed	n_{max}	r/min	6500
Maximum torque	M_{max}	Nm	8.4
Maximum current	I_{max}	A	16
Thermal time constant	T_{th}	min	10
Moment of inertia	J_{mot}	$kgcm^2$	1.27
Moment of inertia (with brake)	$J_{mot\ br}$	$kgcm^2$	1.37
Recommended load to motor inertia ratio	-	-	Maximum 15x
Weight	m_{mot}	kg	2.0
Weight (with brake)	$m_{mot\ br}$	kg	2.8
Rated speed	n_{rated}	r/min	3000
Rated torque	M_{rated}	Nm	2.4
Rated current	I_{rated}	A	4.4
Rated power	P_{rated}	kW	0.75

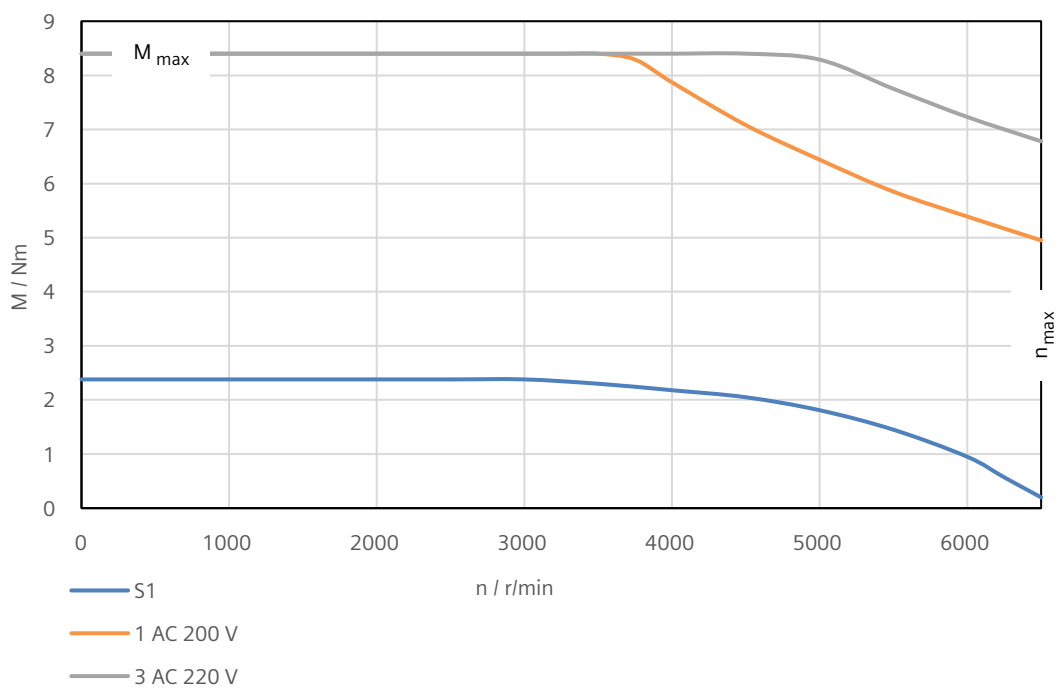

13.2.14.24 1FL2204-4BG connected to 1 AC 200 V/3 AC 220 V

Technical data

Table 13-51 Technical data of 1FL2204-4BG

Feature	Symbol	Unit	Value
Static torque	M_0	Nm	3.2
Stall current	I_0	A	4.4
Maximum permissible speed	n_{max}	r/min	6500
Maximum torque	M_{max}	Nm	11.3
Maximum current	I_{max}	A	16
Thermal time constant	T_{th}	min	17
Moment of inertia	J_{mot}	$kgcm^2$	1.67
Moment of inertia (with brake)	$J_{mot\ br}$	$kgcm^2$	1.77
Recommended load to motor inertia ratio	-	-	Maximum 15x
Weight	m_{mot}	kg	2.4
Weight (with brake)	$m_{mot\ br}$	kg	3.2
Rated speed	n_{rated}	r/min	3000
Rated torque	M_{rated}	Nm	3.2
Rated current	I_{rated}	A	4.4
Rated power	P_{rated}	kW	1

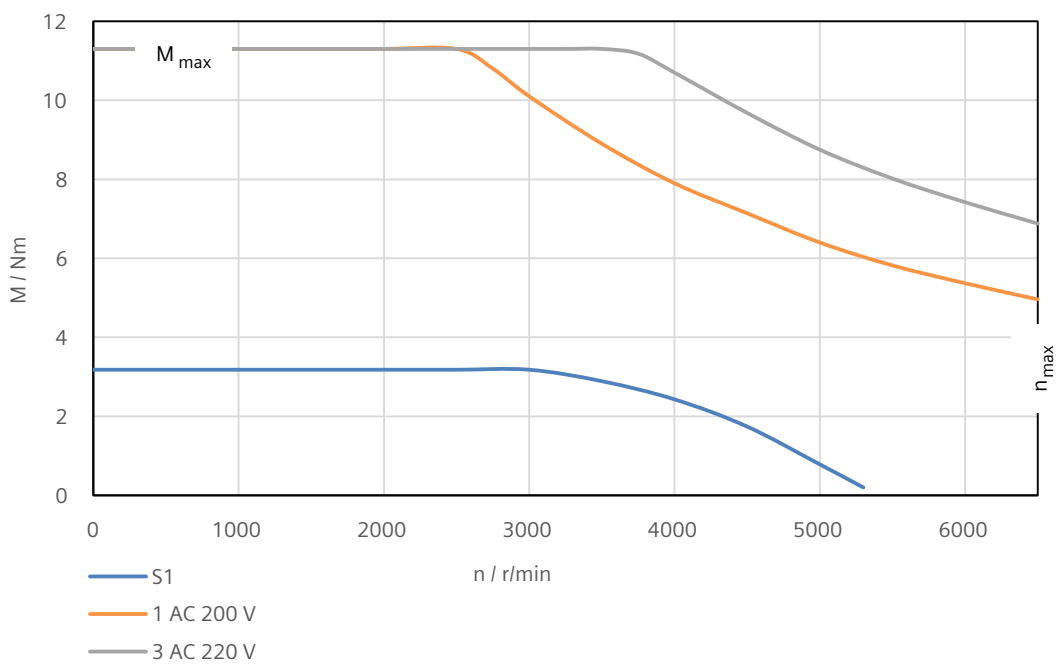

13.2.14.25 1FL2203-2AF connected to 3 AC 380 V/3 AC 400 V

Technical data

Table 13-52 Technical data of 1FL2203-2AF

Feature	Symbol	Unit	Value
Static torque	M_0	Nm	0.64
Stall current	I_0	A	1.3
Maximum permissible speed	n_{max}	r/min	6500
Maximum torque	M_{max}	Nm	2.24
Maximum current	I_{max}	A	4.8
Thermal time constant	T_{th}	min	8.3
Moment of inertia	J_{mot}	$kgcm^2$	0.180
Moment of inertia (with brake)	$J_{mot\ br}$	$kgcm^2$	0.210
Recommended load to motor inertia ratio	-	-	Maximum 30x
Weight	m_{mot}	kg	0.77
Weight (with brake)	$m_{mot\ br}$	kg	1.12
Rated speed	n_{rated}	r/min	3000
Rated torque	M_{rated}	Nm	0.64
Rated current	I_{rated}	A	1.3
Rated power	P_{rated}	kW	0.2

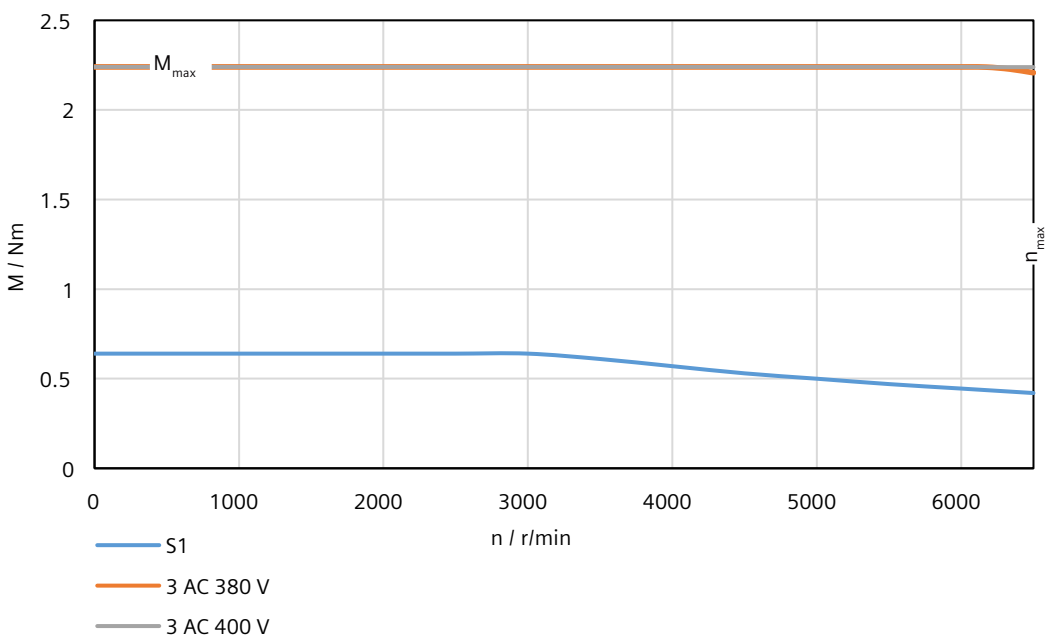

13.2.14.26 1FL2203-4AF connected to 3 AC 380 V/3 AC 400 V

Technical data

Table 13-53 Technical data of 1FL2203-4AF

Feature	Symbol	Unit	Value
Static torque	M_0	Nm	1.27
Stall current	I_0	A	1.3
Maximum permissible speed	n_{max}	r/min	6500
Maximum torque	M_{max}	Nm	4.45
Maximum current	I_{max}	A	4.8
Thermal time constant	T_{th}	min	9.4
Moment of inertia	J_{mot}	$kgcm^2$	0.350
Moment of inertia (with brake)	$J_{mot\ br}$	$kgcm^2$	0.380
Recommended load to motor inertia ratio	-	-	Maximum 30x
Weight	m_{mot}	kg	1.09
Weight (with brake)	$m_{mot\ br}$	kg	1.44
Rated speed	n_{rated}	r/min	3000
Rated torque	M_{rated}	Nm	1.27
Rated current	I_{rated}	A	1.3
Rated power	P_{rated}	kW	0.4

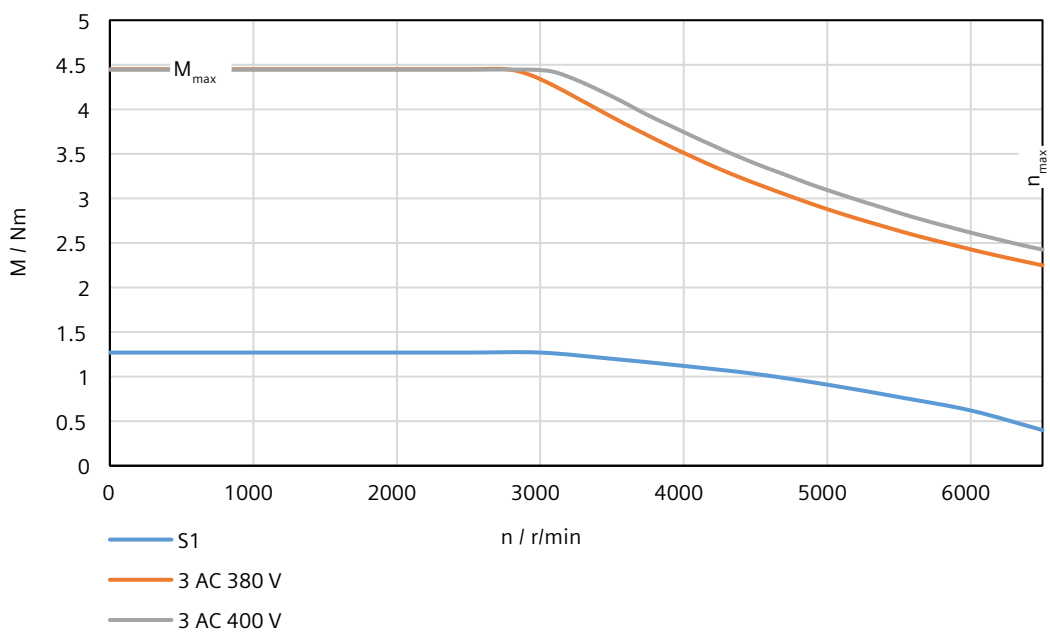

13.2.14.27 1FL2204-2AF connected to 3 AC 380 V/3 AC 400 V

Technical data

Table 13-54 Technical data of 1FL2204-2AF

Feature	Symbol	Unit	Value
Static torque	M_0	Nm	2.4
Stall current	I_0	A	2.25
Maximum permissible speed	n_{max}	r/min	6500
Maximum torque	M_{max}	Nm	7.5
Maximum current	I_{max}	A	7.1
Thermal time constant	T_{th}	min	22.5
Moment of inertia	J_{mot}	$kgcm^2$	1.23
Moment of inertia (with brake)	$J_{mot\ br}$	$kgcm^2$	1.31
Recommended load to motor inertia ratio	-	-	Maximum 15x
Weight	m_{mot}	kg	2.6
Weight (with brake)	$m_{mot\ br}$	kg	3.4
Rated speed	n_{rated}	r/min	3000
Rated torque	M_{rated}	Nm	2.4
Rated current	I_{rated}	A	2.25
Rated power	P_{rated}	kW	0.75

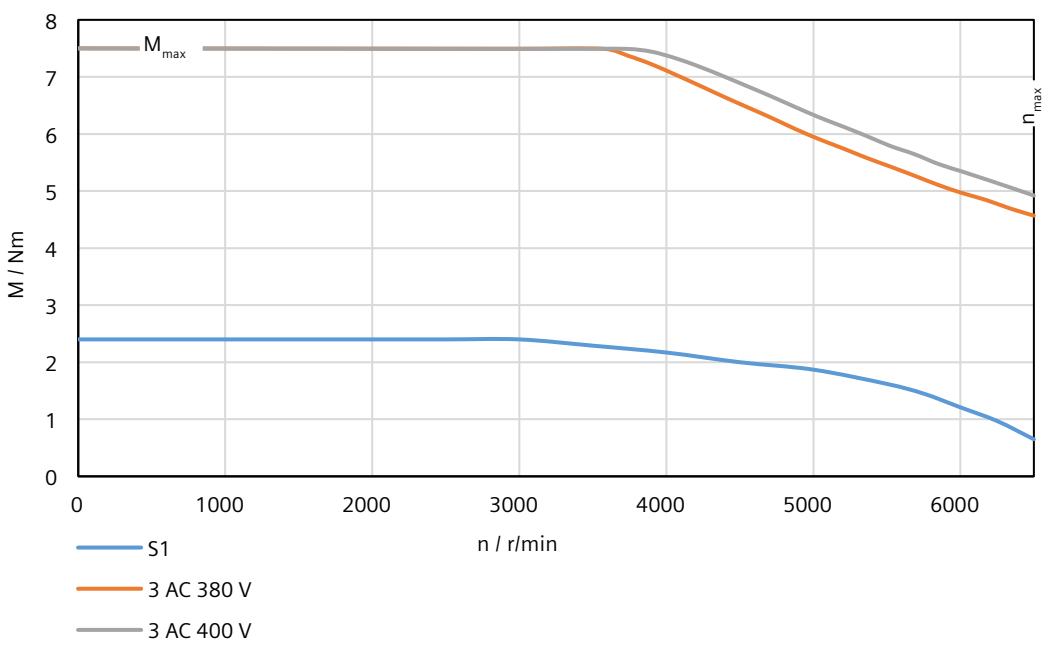

13.2.14.28 1FL2204-4AF connected to 3 AC 380 V/3 AC 400 V

Technical data

Table 13-55 Technical data of 1FL2204-4AF

Feature	Symbol	Unit	Value
Static torque	M_0	Nm	3.2
Stall current	I_0	A	3
Maximum permissible speed	n_{max}	r/min	6500
Maximum torque	M_{max}	Nm	10
Maximum current	I_{max}	A	9.9
Thermal time constant	T_{th}	min	28.4
Moment of inertia	J_{mot}	$kgcm^2$	1.61
Moment of inertia (with brake)	$J_{mot\ br}$	$kgcm^2$	1.69
Recommended load to motor inertia ratio	-	-	Maximum 15x
Weight	m_{mot}	kg	3.1
Weight (with brake)	$m_{mot\ br}$	kg	3.9
Rated speed	n_{rated}	r/min	3000
Rated torque	M_{rated}	Nm	3.2
Rated current	I_{rated}	A	3
Rated power	P_{rated}	kW	1

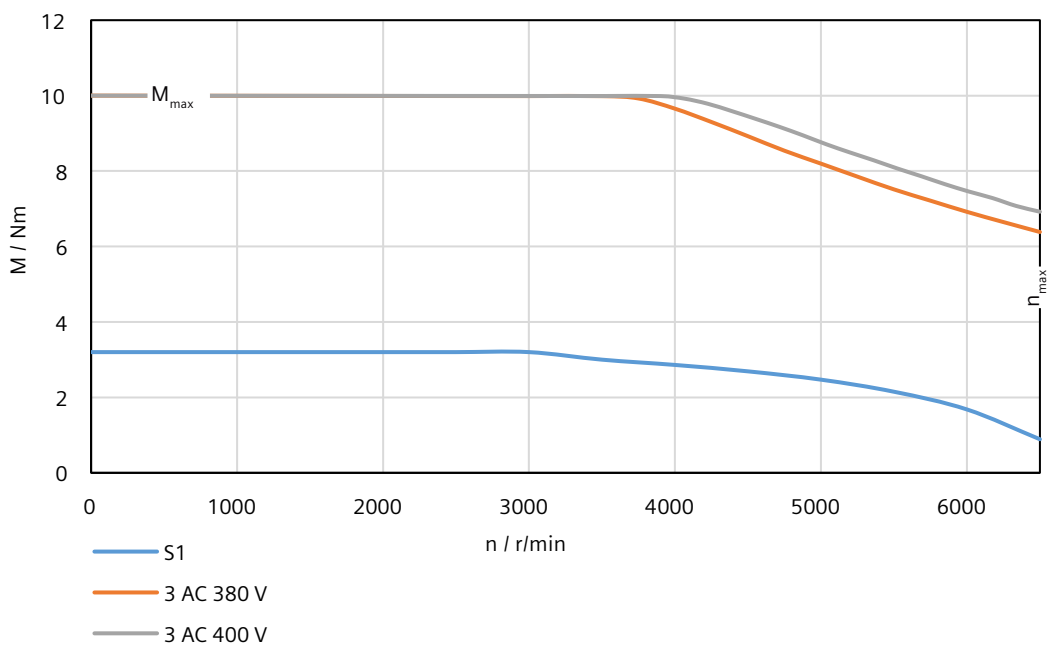

13.2.14.29 1FL2204-2BF connected to 3 AC 380 V/3 AC 400 V

Technical data

Table 13-56 Technical data of 1FL2204-2BF

Feature	Symbol	Unit	Value
Static torque	M_0	Nm	2.4
Stall current	I_0	A	2.5
Maximum permissible speed	n_{max}	r/min	6500
Maximum torque	M_{max}	Nm	8.4
Maximum current	I_{max}	A	9.3
Thermal time constant	T_{th}	min	10
Moment of inertia	J_{mot}	$kgcm^2$	1.27
Moment of inertia (with brake)	$J_{mot\ br}$	$kgcm^2$	1.37
Recommended load to motor inertia ratio	-	-	Maximum 15x
Weight	m_{mot}	kg	2.0
Weight (with brake)	$m_{mot\ br}$	kg	2.8
Rated speed	n_{rated}	r/min	3000
Rated torque	M_{rated}	Nm	2.4
Rated current	I_{rated}	A	2.5
Rated power	P_{rated}	kW	0.75

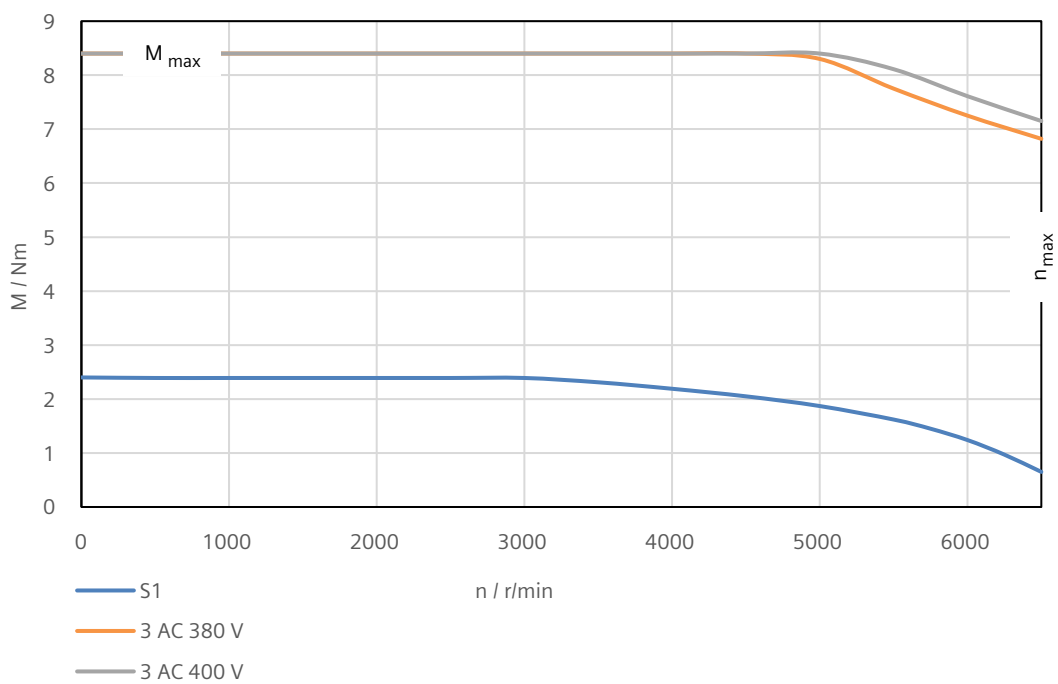

13.2.14.30 1FL2204-4BF connected to 3 AC 380 V/3 AC 400 V

Technical data

Table 13-57 Technical data of 1FL2204-4BF

Feature	Symbol	Unit	Value
Static torque	M_0	Nm	3.2
Stall current	I_0	A	3
Maximum permissible speed	n_{max}	r/min	6500
Maximum torque	M_{max}	Nm	11.2
Maximum current	I_{max}	A	10.9
Thermal time constant	T_{th}	min	12
Moment of inertia	J_{mot}	$kgcm^2$	1.67
Moment of inertia (with brake)	$J_{mot\ br}$	$kgcm^2$	1.77
Recommended load to motor inertia ratio	-	-	Maximum 15x
Weight	m_{mot}	kg	2.4
Weight (with brake)	$m_{mot\ br}$	kg	3.2
Rated speed	n_{rated}	r/min	3000
Rated torque	M_{rated}	Nm	3.2
Rated current	I_{rated}	A	3
Rated power	P_{rated}	kW	1

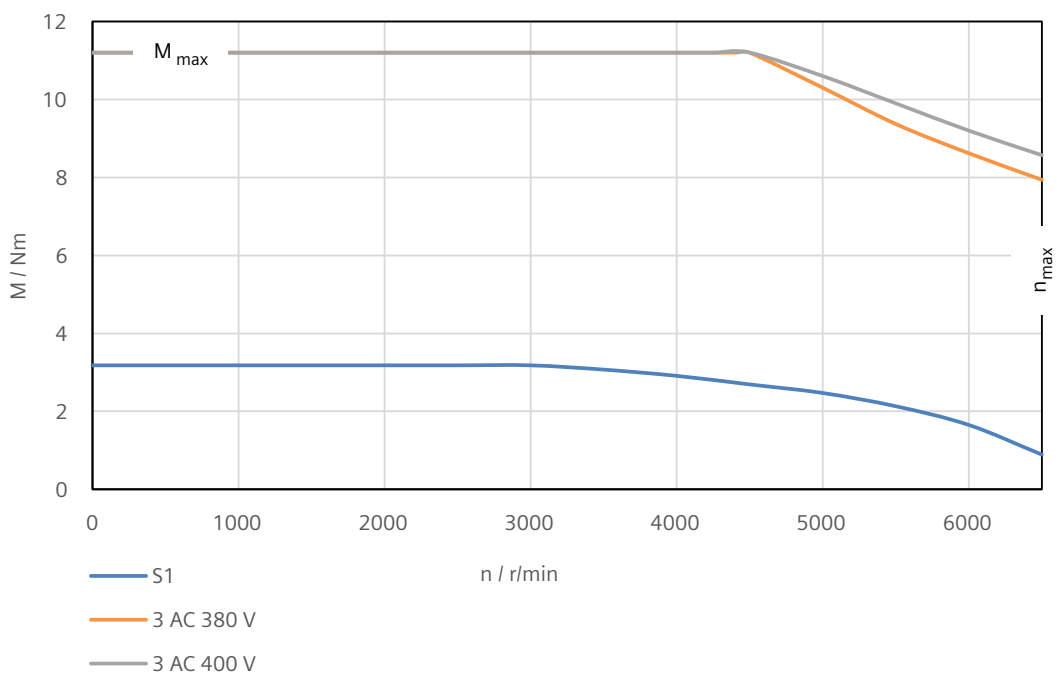

13.2.14.31 1FL2205-2AF connected to 3 AC 380 V/3 AC 400 V

Technical data

Table 13-58 Technical data of 1FL2205-2AF

Feature	Symbol	Unit	Value
Static torque	M_0	Nm	3.6
Stall current	I_0	A	2.9
Maximum permissible speed	n_{max}	r/min	6000
Maximum torque	M_{max}	Nm	11.5
Maximum current	I_{max}	A	9.5
Thermal time constant	T_{th}	min	24.4
Moment of inertia	J_{mot}	$kgcm^2$	3.15
Moment of inertia (with brake)	$J_{mot\ br}$	$kgcm^2$	4.03
Recommended load to motor inertia ratio	-	-	Maximum 15x
Weight	m_{mot}	kg	3.6
Weight (with brake)	$m_{mot\ br}$	kg	4.7
Rated speed	n_{rated}	r/min	3000
Rated torque	M_{rated}	Nm	3
Rated current	I_{rated}	A	2.5
Rated power	P_{rated}	kW	0.94

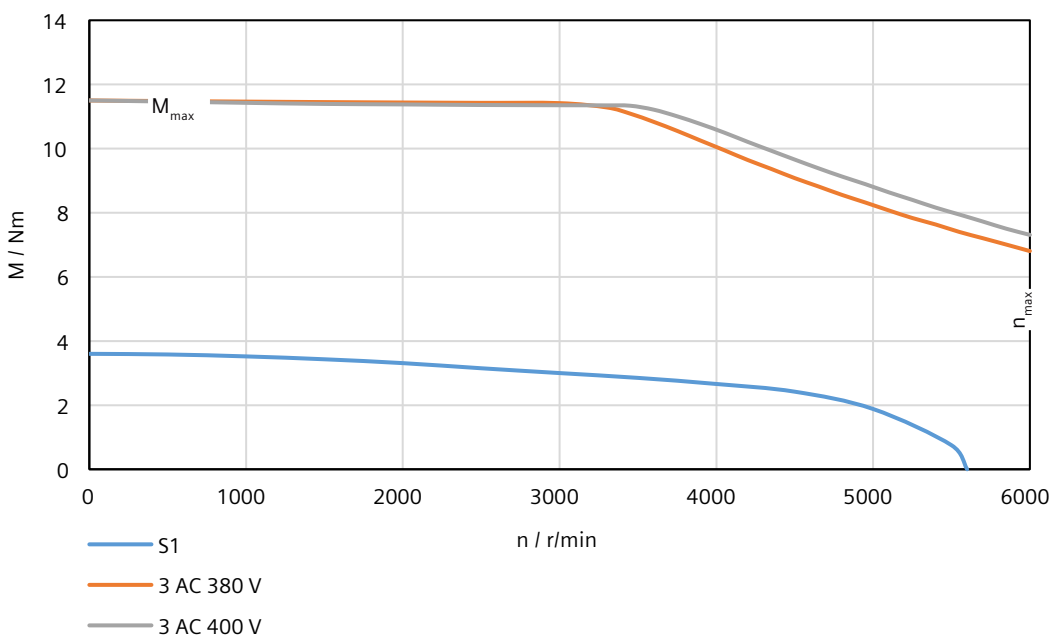

13.2.14.32 1FL2205-4AF connected to 3 AC 380 V/3 AC 400 V

Technical data

Table 13-59 Technical data of 1FL2205-4AF

Feature	Symbol	Unit	Value
Static torque	M_0	Nm	6
Stall current	I_0	A	4.7
Maximum permissible speed	n_{max}	r/min	6000
Maximum torque	M_{max}	Nm	19.3
Maximum current	I_{max}	A	15.1
Thermal time constant	T_{th}	min	31
Moment of inertia	J_{mot}	$kgcm^2$	5.10
Moment of inertia (with brake)	$J_{mot\ br}$	$kgcm^2$	5.98
Recommended load to motor inertia ratio	-	-	Maximum 15x
Weight	m_{mot}	kg	5
Weight (with brake)	$m_{mot\ br}$	kg	6.1
Rated speed	n_{rated}	r/min	3000
Rated torque	M_{rated}	Nm	4.6
Rated current	I_{rated}	A	3.75
Rated power	P_{rated}	kW	1.45

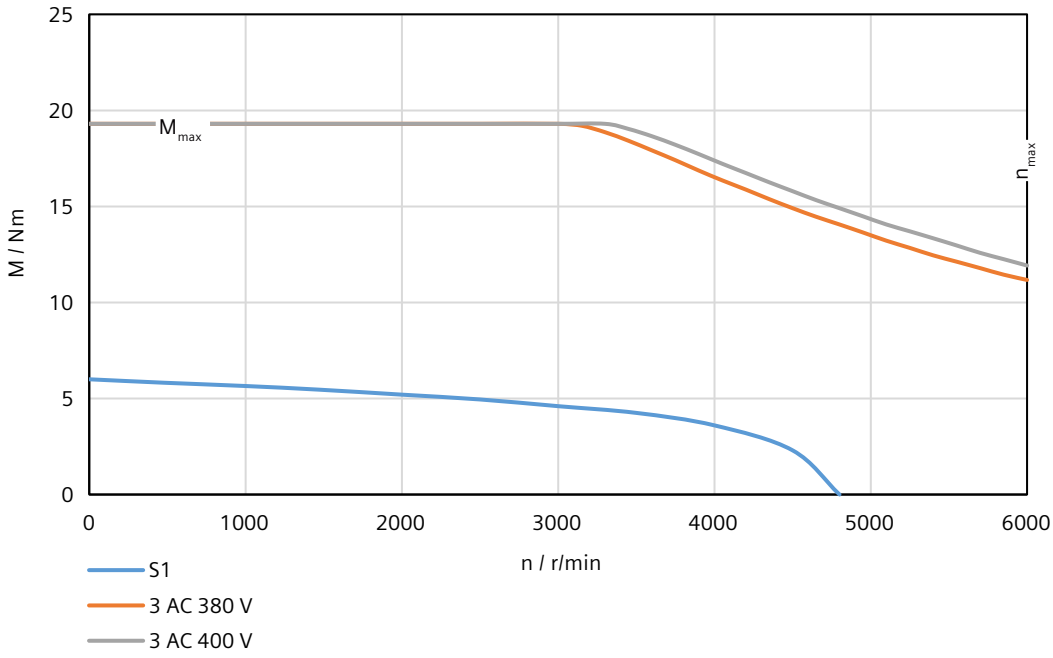

13.2.14.33 1FL2304-2AF connected to 3 AC 380 V/3 AC 400 V

Technical data

Table 13-60 Technical data of 1FL2304-2AF

Feature	Symbol	Unit	Value
Static torque	M_0	Nm	1.45
Stall current	I_0	A	1.3
Maximum permissible speed	n_{max}	r/min	4000
Maximum torque	M_{max}	Nm	4.445
Maximum current	I_{max}	A	4.2
Thermal time constant	T_{th}	min	18
Moment of inertia	J_{mot}	$kgcm^2$	2.69
Moment of inertia (with brake)	$J_{mot\ br}$	$kgcm^2$	3.05
Recommended load to motor inertia ratio	-	-	Maximum 10x
Weight	m_{mot}	kg	3.5
Weight (with brake)	$m_{mot\ br}$	kg	4.9
Rated speed	n_{rated}	r/min	3000
Rated torque	M_{rated}	Nm	1.27
Rated current	I_{rated}	A	1.2
Rated power	P_{rated}	kW	0.4

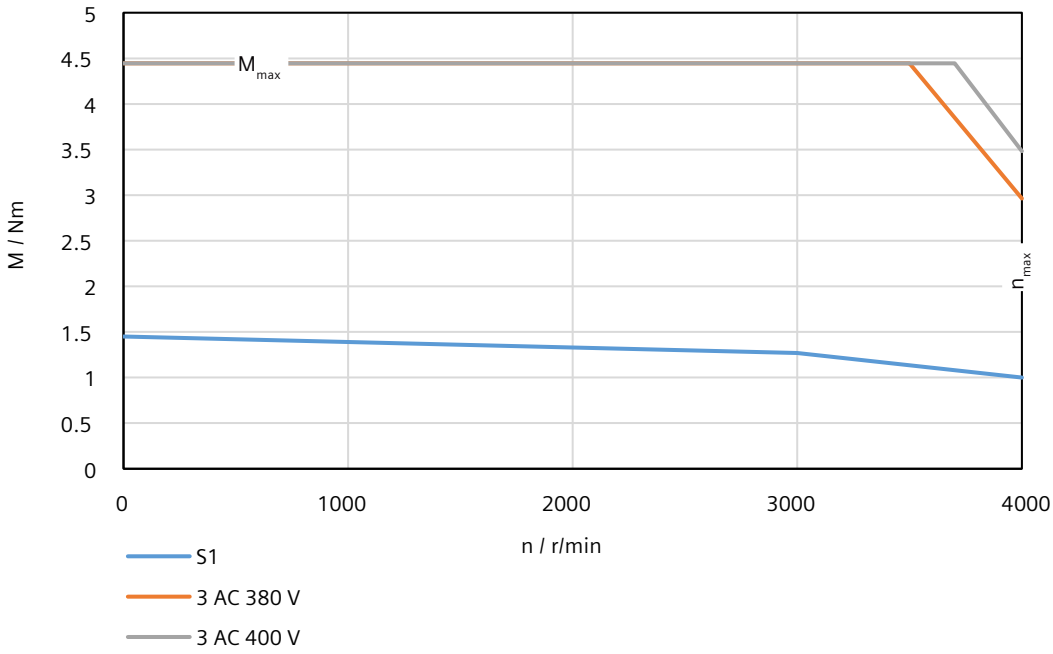

13.2.14.34 1FL2304-4AF connected to 3 AC 380 V/3 AC 400 V

Technical data

Table 13-61 Technical data of 1FL2304-4AF

Feature	Symbol	Unit	Value
Static torque	M_0	Nm	3.02
Stall current	I_0	A	2.5
Maximum permissible speed	n_{max}	r/min	4000
Maximum torque	M_{max}	Nm	8.365
Maximum current	I_{max}	A	7.3
Thermal time constant	T_{th}	min	22
Moment of inertia	J_{mot}	$kgcm^2$	5.18
Moment of inertia (with brake)	$J_{mot\ br}$	$kgcm^2$	5.54
Recommended load to motor inertia ratio	-	-	Maximum 10x
Weight	m_{mot}	kg	5.4
Weight (with brake)	$m_{mot\ br}$	kg	6.8
Rated speed	n_{rated}	r/min	3000
Rated torque	M_{rated}	Nm	2.39
Rated current	I_{rated}	A	2.1
Rated power	P_{rated}	kW	0.75

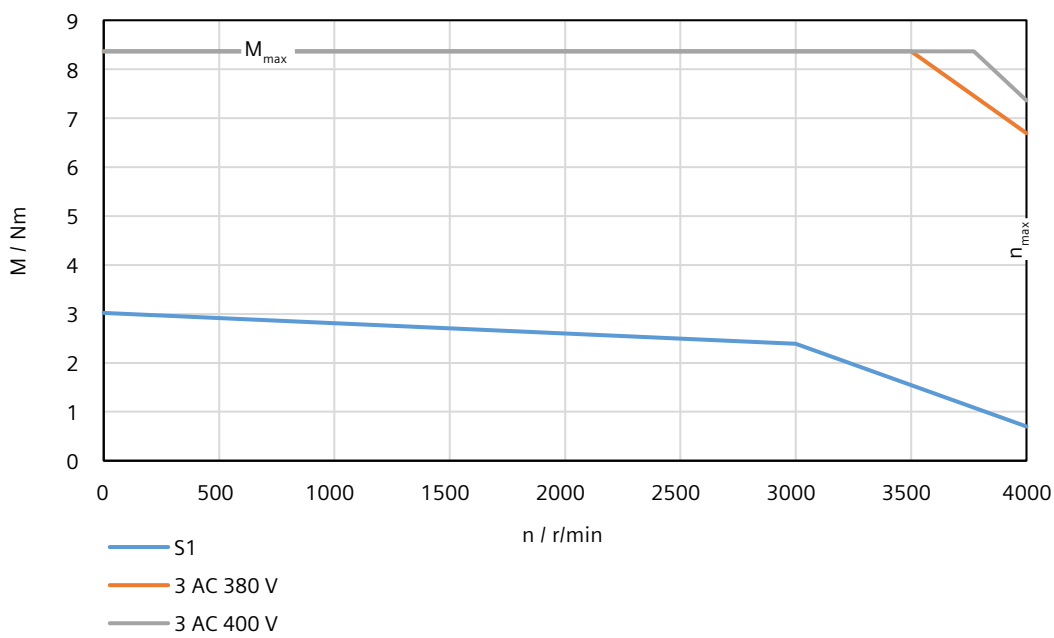

13.2.14.35 1FL2306-1AC connected to 3 AC 380 V/3 AC 400 V

Technical data

Table 13-62 Technical data of 1FL2306-1AC

Feature	Symbol	Unit	Value
Static torque	M_0	Nm	3.7
Stall current	I_0	A	2.5
Maximum permissible speed	n_{max}	r/min	3000
Maximum torque	M_{max}	Nm	12
Maximum current	I_{max}	A	8.4
Thermal time constant	T_{th}	min	22
Moment of inertia	J_{mot}	$kgcm^2$	7.96
Moment of inertia (with brake)	$J_{mot\ br}$	$kgcm^2$	9.57
Recommended load to motor inertia ratio	-	-	Maximum 10x
Weight	m_{mot}	kg	5.9
Weight (with brake)	$m_{mot\ br}$	kg	8.9
Rated speed	n_{rated}	r/min	2000
Rated torque	M_{rated}	Nm	3.58
Rated current	I_{rated}	A	2.5
Rated power	P_{rated}	kW	0.75

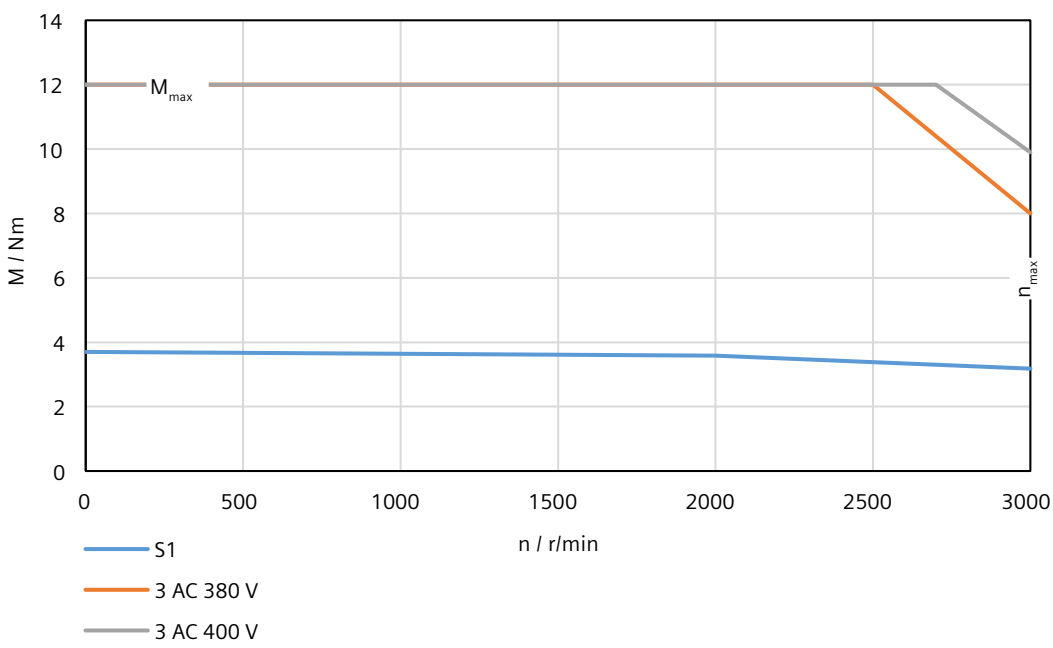

13.2.14.36 1FL2306-2AC connected to 3 AC 380 V/3 AC 400 V

Technical data

Table 13-63 Technical data of 1FL2306-2AC

Feature	Symbol	Unit	Value
Static torque	M_0	Nm	5
Stall current	I_0	A	3
Maximum permissible speed	n_{max}	r/min	3000
Maximum torque	M_{max}	Nm	17
Maximum current	I_{max}	A	10.7
Thermal time constant	T_{th}	min	22
Moment of inertia	J_{mot}	$kgcm^2$	11.65
Moment of inertia (with brake)	$J_{mot\ br}$	$kgcm^2$	13.26
Recommended load to motor inertia ratio	-	-	Maximum 5x
Weight	m_{mot}	kg	7.3
Weight (with brake)	$m_{mot\ br}$	kg	10.3
Rated speed	n_{rated}	r/min	2000
Rated torque	M_{rated}	Nm	4.78
Rated current	I_{rated}	A	3
Rated power	P_{rated}	kW	1

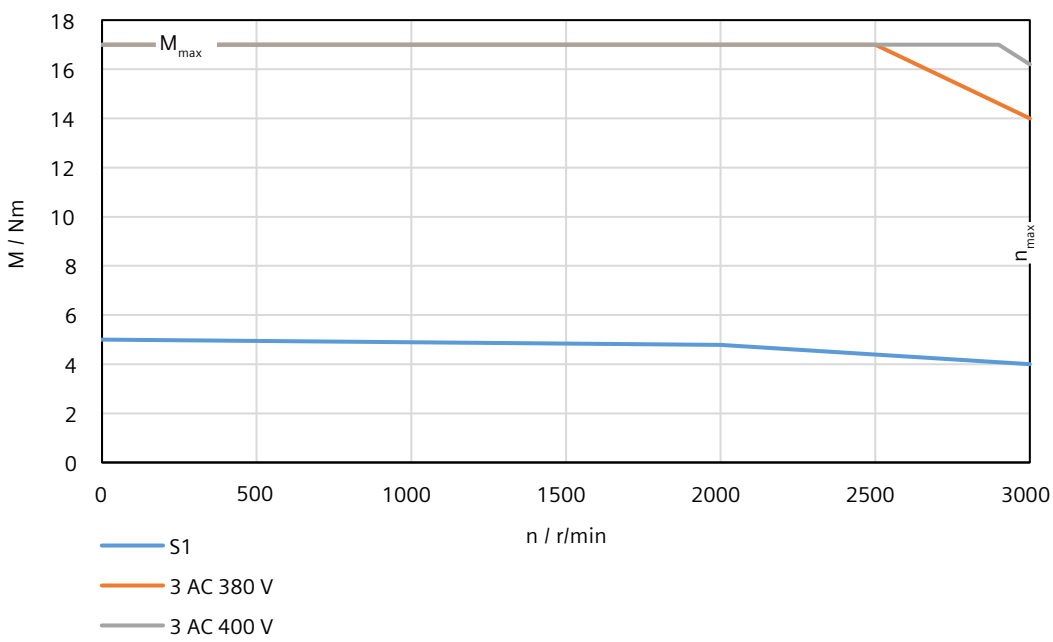

13.2.14.37 1FL2306-4AC connected to 3 AC 380 V/3 AC 400 V

Technical data

Table 13-64 Technical data of 1FL2306-4AC

Feature	Symbol	Unit	Value
Static torque	M_0	Nm	8
Stall current	I_0	A	4.9
Maximum permissible speed	n_{max}	r/min	3000
Maximum torque	M_{max}	Nm	22
Maximum current	I_{max}	A	14.1
Thermal time constant	T_{th}	min	30
Moment of inertia	J_{mot}	$kgcm^2$	15.29
Moment of inertia (with brake)	$J_{mot\ br}$	$kgcm^2$	16.90
Recommended load to motor inertia ratio	-	-	Maximum 5x
Weight	m_{mot}	kg	8.6
Weight (with brake)	$m_{mot\ br}$	kg	11.6
Rated speed	n_{rated}	r/min	2000
Rated torque	M_{rated}	Nm	7.16
Rated current	I_{rated}	A	4.6
Rated power	P_{rated}	kW	1.5

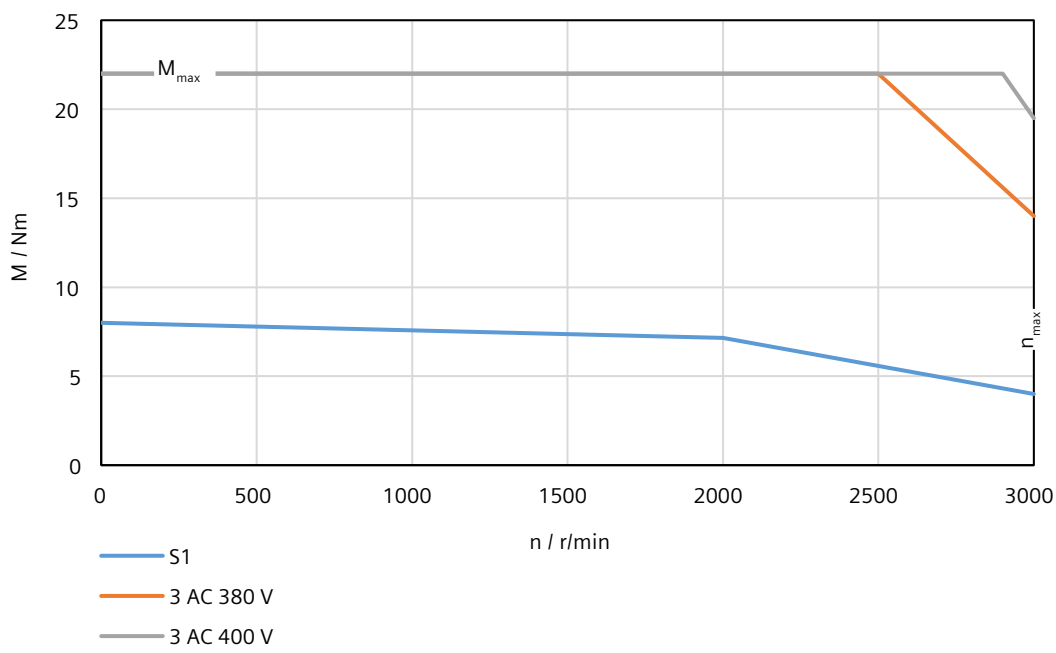

13.2.14.38 1FL2306-6AC connected to 3 AC 380 V/3 AC 400 V

Technical data

Table 13-65 Technical data of 1FL2306-6AC

Feature	Symbol	Unit	Value
Static torque	M_0	Nm	8.8
Stall current	I_0	A	5.3
Maximum permissible speed	n_{max}	r/min	3000
Maximum torque	M_{max}	Nm	30
Maximum current	I_{max}	A	19
Thermal time constant	T_{th}	min	30
Moment of inertia	J_{mot}	$kgcm^2$	22.61
Moment of inertia (with brake)	$J_{mot\ br}$	$kgcm^2$	24.22
Recommended load to motor inertia ratio	-	-	Maximum 5x
Weight	m_{mot}	kg	11.1
Weight (with brake)	$m_{mot\ br}$	kg	14.1
Rated speed	n_{rated}	r/min	2000
Rated torque	M_{rated}	Nm	8.4
Rated current	I_{rated}	A	5.3
Rated power	P_{rated}	kW	1.75

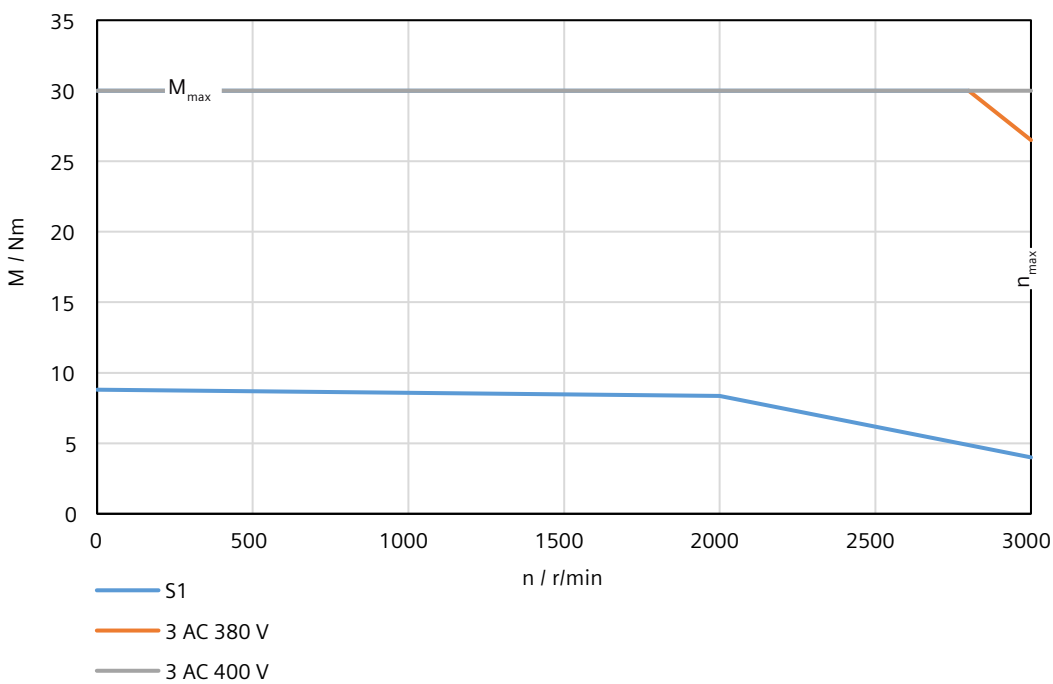

13.2.14.39 1FL2306-7AC connected to 3 AC 380 V/3 AC 400 V

Technical data

Table 13-66 Technical data of 1FL2306-7AC

Feature	Symbol	Unit	Value
Static torque	M_0	Nm	13.3
Stall current	I_0	A	7.8
Maximum permissible speed	n_{max}	r/min	3000
Maximum torque	M_{max}	Nm	33.425
Maximum current	I_{max}	A	20.7
Thermal time constant	T_{th}	min	32
Moment of inertia	J_{mot}	$kgcm^2$	29.94
Moment of inertia (with brake)	$J_{mot\ br}$	$kgcm^2$	31.55
Recommended load to motor inertia ratio	-	-	Maximum 5x
Weight	m_{mot}	kg	13.7
Weight (with brake)	$m_{mot\ br}$	kg	16.7
Rated speed	n_{rated}	r/min	2000
Rated torque	M_{rated}	Nm	9.6
Rated current	I_{rated}	A	5.9
Rated power	P_{rated}	kW	2

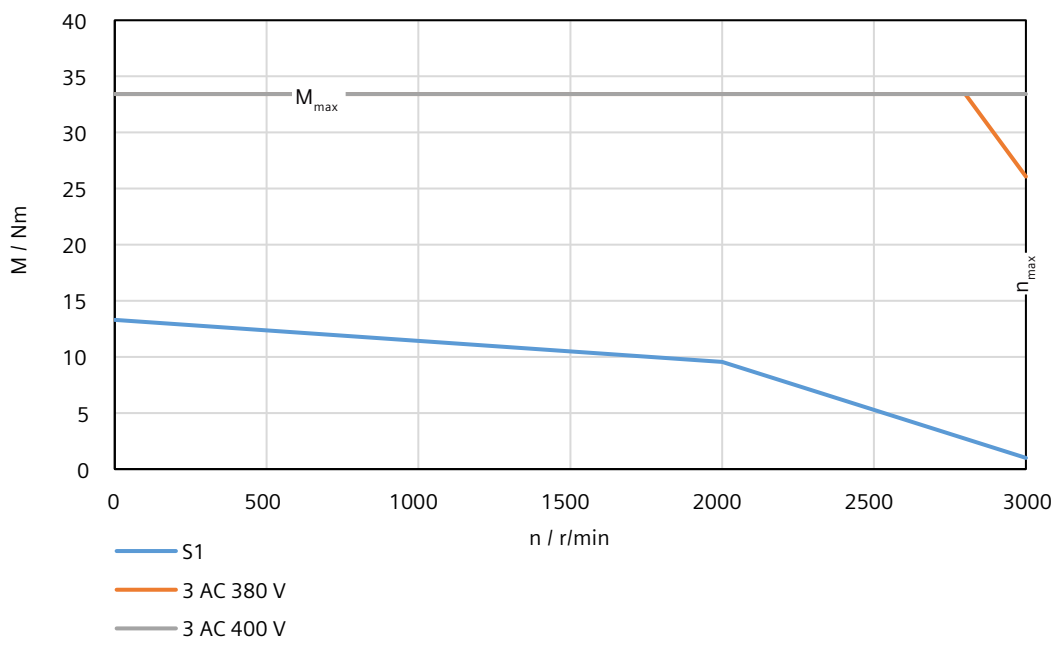

13.2.14.40 1FL2310-0AC connected to 3 AC 380 V/3 AC 400 V

Technical data

Table 13-67 Technical data of 1FL2310-0AC

Feature	Symbol	Unit	Value
Static torque	M_0	Nm	12.6
Stall current	I_0	A	7.8
Maximum permissible speed	n_{max}	r/min	3000
Maximum torque	M_{max}	Nm	37.5
Maximum current	I_{max}	A	25.2
Thermal time constant	T_{th}	min	35
Moment of inertia	J_{mot}	$kgcm^2$	47.41
Moment of inertia (with brake)	$J_{mot\ br}$	$kgcm^2$	56.78
Recommended load to motor inertia ratio	-	-	Maximum 5x
Weight	m_{mot}	kg	15.4
Weight (with brake)	$m_{mot\ br}$	kg	21.4
Rated speed	n_{rated}	r/min	2000
Rated torque	M_{rated}	Nm	11.9
Rated current	I_{rated}	A	7.8
Rated power	P_{rated}	kW	2.5

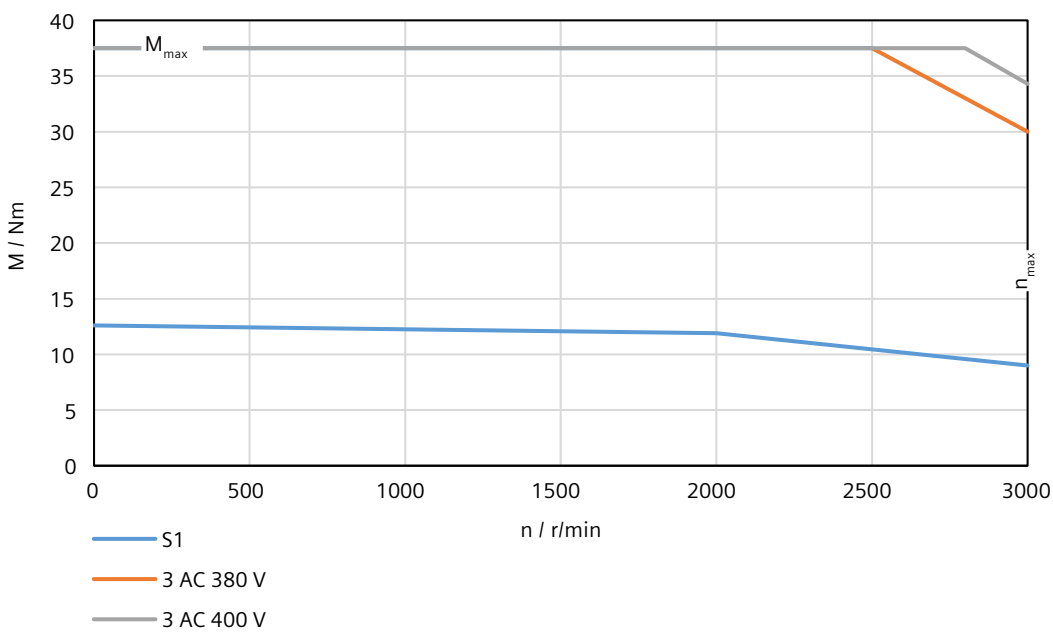

13.2.14.41 1FL2310-2AC connected to 3 AC 380 V/3 AC 400 V

Technical data

Table 13-68 Technical data of 1FL2310-2AC

Feature	Symbol	Unit	Value
Static torque	M_0	Nm	18.1
Stall current	I_0	A	11
Maximum permissible speed	n_{max}	r/min	3000
Maximum torque	M_{max}	Nm	55
Maximum current	I_{max}	A	36.2
Thermal time constant	T_{th}	min	38
Moment of inertia	J_{mot}	$kgcm^2$	69.10
Moment of inertia (with brake)	$J_{mot\ br}$	$kgcm^2$	78.47
Recommended load to motor inertia ratio	-	-	Maximum 5x
Weight	m_{mot}	kg	19.4
Weight (with brake)	$m_{mot\ br}$	kg	25.4
Rated speed	n_{rated}	r/min	2000
Rated torque	M_{rated}	Nm	16.7
Rated current	I_{rated}	A	11
Rated power	P_{rated}	kW	3.5

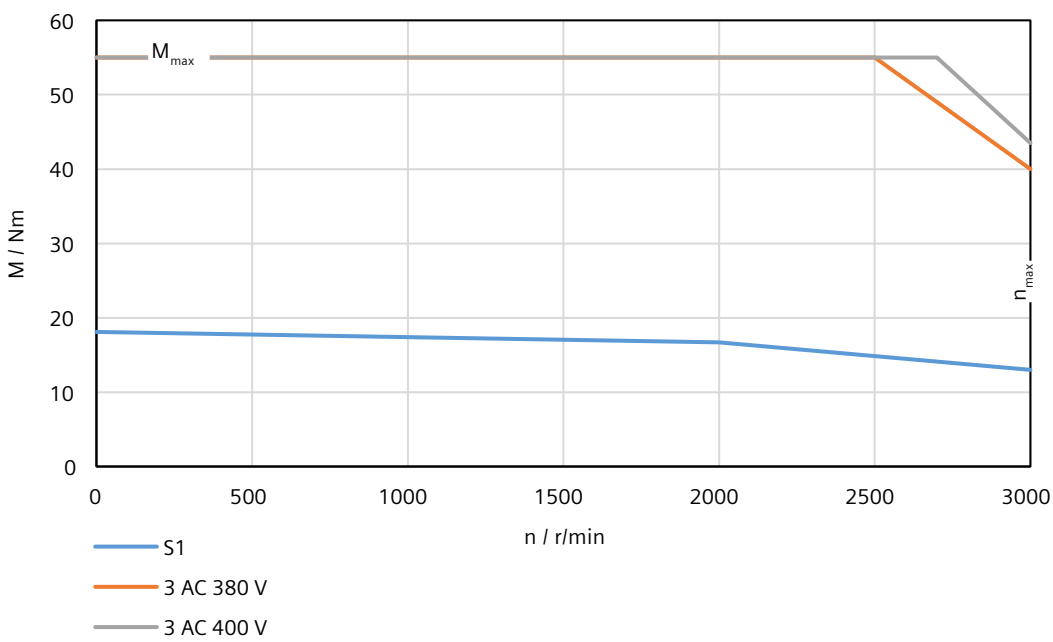

13.2.14.42 1FL2310-4AC connected to 3 AC 380 V/3 AC 400 V

Technical data

Table 13-69 Technical data of 1FL2310-4AC

Feature	Symbol	Unit	Value
Static torque	M_0	Nm	25.2
Stall current	I_0	A	12.6
Maximum permissible speed	n_{max}	r/min	2500
Maximum torque	M_{max}	Nm	70
Maximum current	I_{max}	A	36.9
Thermal time constant	T_{th}	min	45
Moment of inertia	J_{mot}	$kgcm^2$	90.83
Moment of inertia (with brake)	$J_{mot\ br}$	$kgcm^2$	100.20
Recommended load to motor inertia ratio	-	-	Maximum 5x
Weight	m_{mot}	kg	23.7
Weight (with brake)	$m_{mot\ br}$	kg	29.7
Rated speed	n_{rated}	r/min	2000
Rated torque	M_{rated}	Nm	23.9
Rated current	I_{rated}	A	12.6
Rated power	P_{rated}	kW	5

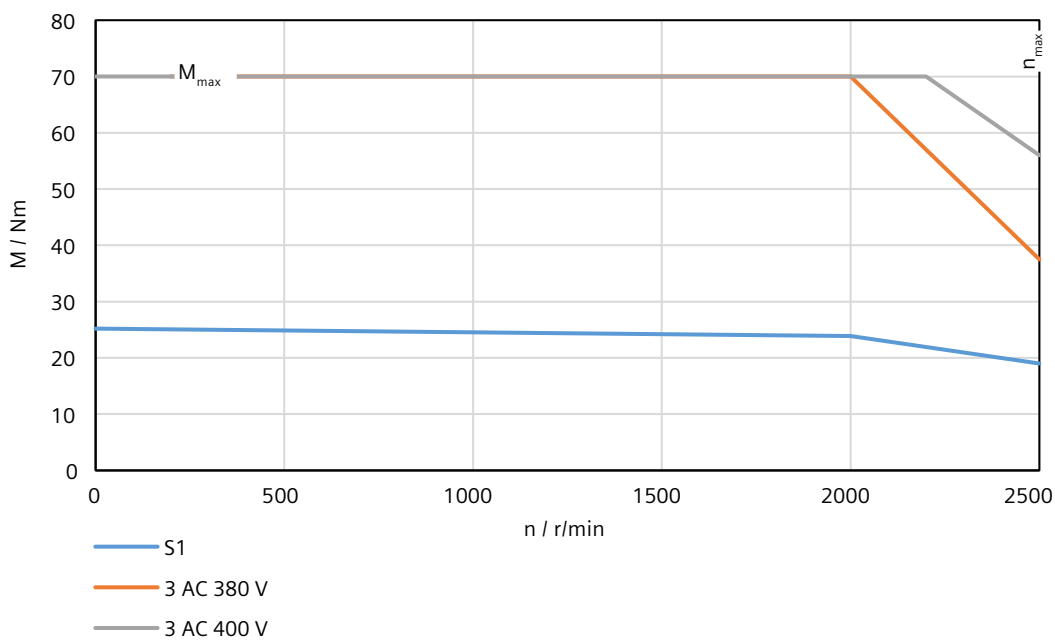

13.2.14.43 1FL2310-6AC connected to 3 AC 380 V/3 AC 400 V

Technical data

Table 13-70 Technical data of 1FL2310-6AC

Feature	Symbol	Unit	Value
Static torque	M_0	Nm	35.2
Stall current	I_0	A	13.2
Maximum permissible speed	n_{max}	r/min	2000
Maximum torque	M_{max}	Nm	90
Maximum current	I_{max}	A	35.6
Thermal time constant	T_{th}	min	55
Moment of inertia	J_{mot}	$kgcm^2$	134.29
Moment of inertia (with brake)	$J_{mot\ br}$	$kgcm^2$	143.66
Recommended load to motor inertia ratio	-	-	Maximum 5x
Weight	m_{mot}	kg	31.9
Weight (with brake)	$m_{mot\ br}$	kg	37.9
Rated speed	n_{rated}	r/min	2000
Rated torque	M_{rated}	Nm	33.4
Rated current	I_{rated}	A	13.2
Rated power	P_{rated}	kW	7

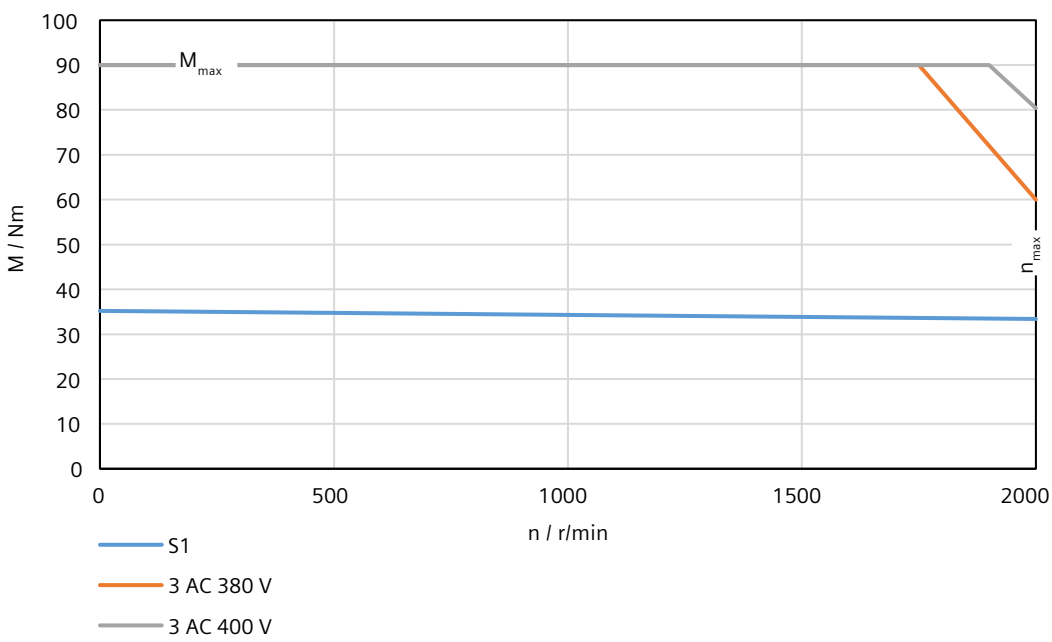

13.3 Technical data of MOTION-CONNECT cables

13.3.1 Technical data of MOTION-CONNECT 350

13.3.1.1 General technical data

Technical data

Table 13-71 General technical data of MOTION-CONNECT 350

Property	MOTION-CONNECT 350 power cable	MOTION-CONNECT 350 encoder cable	MOTION-CONNECT 350 brake cable
Jacket material	PVC	PVC	PVC
Number of conductors	• With brake conductors: 6 • Without brake conductors: 4	6	2
Operating temperature (°C)	-20 ... +80	-20 ... +80	-20 ... +80
Shielding	Braided shield; coverage ≥ 85%	Braided shield; coverage ≥ 85%	Braided shield; coverage ≥ 85%
Oil resistance	EN 60811-2-1	EN 60811-2-1	EN 60811-2-1
Flame retardancy	EN 60332-1-1 to 1-3	EN 60332-1-1 to 1-3	EN 60332-1-1 to 1-3
Coolant resistance	EN 60811-2-1	EN 60811-2-1	EN 60811-2-1
Degree of protection (motor-side only)	IP65	IP65	IP65
Bending cycles	1 million	1 million	1 million
Rated voltage U_0/U (V)	• 200 V converters: 300/1000 • 400 V converters: 600/1000	30/300	30/300

13.3.1.2 Specific technical data

Technical data

Table 13-72 Cable used for 1FL2 low or medium inertia motors

Property	MOTION-CONNECT 350 power cable	MOTION-CONNECT 350 encoder cable	MOTION-CONNECT 350 brake cable
Cross-section of conductors (mm^2)	• With brake conductors: 4 x 0.75 + 2 x 0.38 (4 × 18 AWG + 2 × 22 AWG) • Without brake conductors: 4 x 0.75 (4 × 18 AWG)	• Cable length up to 15 m: 3 x 2 x 0.25 (3 × 2 × 24 AWG) • Cable length 20 m or 30 m: 2 x 2 x 0.25 + 2 x 0.38 (2 × 2 × 24 AWG + 2 × 22 AWG)	-
Outer diameter (mm)	ø (7.5 ± 0.2)	ø (7 ± 0.2)	-
Minimum bending radius, static (mm)	4 x outer diameter	4 x outer diameter	-
Minimum bending radius, dynamic (mm)	7.5 x outer diameter	7.5 x outer diameter	-
Maximum acceleration (m/s^2)	3	3	-
Maximum traversing velocity (m/min)	40	40	-

Table 13-73 Cable used for 1FL2 high inertia motors

Property	MOTION-CONNECT 350 power cable	MOTION-CONNECT 350 encoder cable	MOTION-CONNECT 350 brake cable
Cross-section of conductors (mm^2)	• 1FL2 0.4 kW ... 2 kW: 4 x 0.75 (4 × 18 AWG) • 1FL2 2.5 kW: 4 x 1.5 (4 × 16 AWG) • 1FL2 3.5 kW ... 7 kW: 4 x 2.5 (4 × 14 AWG)	• Cable length up to 15 m: 3 x 2 x 0.25 (3 × 2 × 24 AWG) • Cable length 20 m or 30 m: 2 x 2 x 0.25 + 2 x 0.38 (2 × 2 × 24 AWG + 2 × 22 AWG)	2 x 0.75 (2 × 18 AWG)
Outer diameter (mm)	• 1FL2 0.4 kW ... 2 kW: ø (7.5 ± 0.2) • 1FL2 2.5 kW: ø (7.8 ± 0.3) • 1FL2 3.5 kW ... 7 kW: ø (9 ± 0.3)	ø (7 ± 0.2)	ø (6 ± 0.2)
Minimum bending radius, static (mm)	4 x outer diameter	4 x outer diameter	4 x outer diameter

Property	MOTION-CONNECT 350 power cable	MOTION-CONNECT 350 encoder cable	MOTION-CONNECT 350 brake cable
Minimum bending radius, dynamic (mm)	7.5 x outer diameter	7.5 x outer diameter	7.5 x outer diameter
Maximum acceleration (m/s²)	3	3	3
Maximum traversing velocity (m/min)	• 1FL2 0.4 kW ... 2 kW: 40 • 1FL2 2.5 kW: 50 • 1FL2 3.5 kW ... 7 kW: 50	40	50

13.3.2 Technical data of MOTION-CONNECT 380

13.3.2.1 General technical data

Technical data

Table 13-74 General technical data of MOTION-CONNECT 380

Property	MOTION-CONNECT 380 power cable	MOTION-CONNECT 380 encoder cable	MOTION-CONNECT 380 brake cable
Jacket material	PUR	PUR	PUR
Number of conductors	• With brake conductors: 6 • Without brake conductors: 4	6	2
Operating temperature (°C)	-20 ... +80	-20 ... +80	-20 ... +80
Shielding	Braided shield; coverage ≥ 85%	Braided shield; coverage ≥ 85%	Braided shield; coverage ≥ 85%
Oil resistance	EN 60811-2-1	EN 60811-2-1	EN 60811-2-1
Flame retardancy	EN 60332-1-1 to 1-3	EN 60332-1-1 to 1-3	EN 60332-1-1 to 1-3
Coolant resistance	EN 60811-2-1	EN 60811-2-1	EN 60811-2-1
Degree of protection (motor-side only)	IP65	IP65	IP65
Bending cycles	5 million	5 million	5 million
Rated voltage U_0/U (V)	• 200 V converters: 300/1000 • 400 V converters: 600/1000	30/300	30/300

13.3.2.2 Specific technical data

Technical data

Table 13-75 Cable used for 1FL2 low or medium inertia motors

Property	MOTION-CONNECT 380 power cable	MOTION-CONNECT 380 encoder cable	MOTION-CONNECT 380 brake cable
Cross-section of conductors (mm^2)	• With brake conductors: 4 x 0.75 + 2 x 0.38 (4 × 18 AWG + 2 × 22 AWG) • Without brake conductors: 4 x 0.75 (4 × 18 AWG)	• Cable length up to 15 m: 3 x 2 x 0.25 (3 × 2 × 24 AWG) • Cable length 20 m or 30 m: 2 x 2 x 0.25 + 2 x 0.38 (2 × 2 × 24 AWG + 2 × 22 AWG)	-
Outer diameter (mm)	ø (7.5 ± 0.2)	ø (7 ± 0.2)	-
Minimum bending radius, static (mm)	4 x outer diameter	4 x outer diameter	-
Minimum bending radius, dynamic (mm)	7.5 x outer diameter	7.5 x outer diameter	-
Maximum acceleration (m/s^2)	5	5	-
Maximum traversing velocity (m/min)	180	180	-

Table 13-76 Cable used for 1FL2 high inertia motors

Property	MOTION-CONNECT 380 power cable	MOTION-CONNECT 380 encoder cable	MOTION-CONNECT 380 brake cable
Cross-section of conductors (mm^2)	• 1FL2 0.4 kW ... 2 kW: 4 x 0.75 (4 × 18 AWG) • 1FL2 2.5 kW: 4 x 1.5 (4 × 16 AWG) • 1FL2 3.5 kW ... 7 kW: 4 x 2.5 (4 × 14 AWG)	• Cable length up to 15 m: 3 x 2 x 0.25 (3 × 2 × 24 AWG) • Cable length 20 m or 30 m: 2 x 2 x 0.25 + 2 x 0.38 (2 × 2 × 24 AWG + 2 × 22 AWG)	2 x 0.75 (2 × 18 AWG)
Outer diameter (mm)	• 1FL2 0.4 kW ... 2 kW: ø (7.5 ± 0.2) • 1FL2 2.5 kW: ø (9 ± 0.3) • 1FL2 3.5 kW ... 7 kW: ø (10.5 ± 0.3)	ø (7 ± 0.2)	ø (6 ± 0.3)
Minimum bending radius, static (mm)	4 x outer diameter	4 x outer diameter	4 x outer diameter

Property	MOTION-CONNECT 380 power cable	MOTION-CONNECT 380 encoder cable	MOTION-CONNECT 380 brake cable
Minimum bending radius, dynamic (mm)	7.5 x outer diameter	7.5 x outer diameter	7.5 x outer diameter
Maximum acceleration (m/s²)	5	5	5
Maximum traversing velocity (m/min)	180	180	180

13.3.2.3 Acceleration characteristic curve

Description

The acceleration characteristic curve of MOTION-CONNECT 380 is as follows:

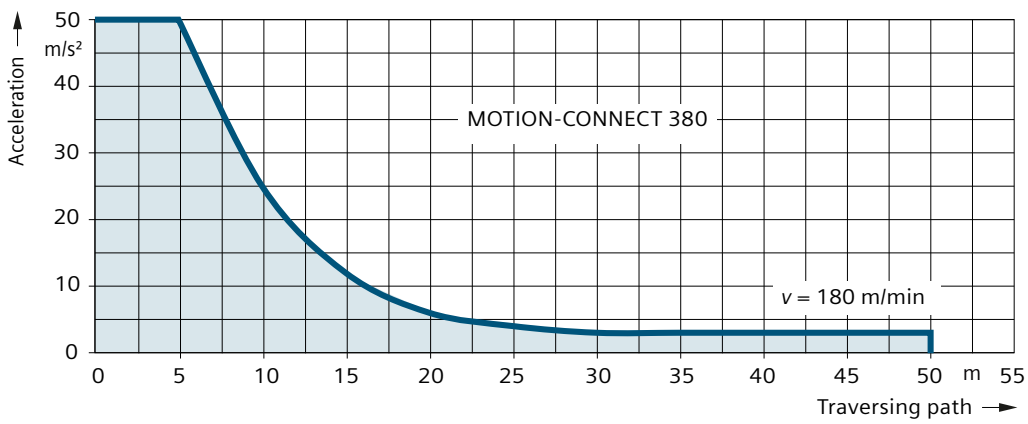

Figure 13-18 Acceleration characteristic curve of MOTION-CONNECT 380

Examples/applications

14

Description

You can find SINAMICS application examples in the Application examples (https://sieportal.siemens.com/su/bkbaa).

Appendix

A

A.1 UL Markings

Description

Converter variant of 1 AC/3 AC 200 V ... 240 V

For US/Canadian installations (UL/cUL): The products are cULus-listed under File E355661.

- Suitable for use in a circuit that cannot provide more than 100 kA rms (symmetrical), max. 240 V.
  Note: The maximum permissible short-circuit current for 200 V variants with Type E Combination Motor Controllers is 65 kA.
- Protection of the branch circuit for individual drives must be guaranteed using Class J fuses in accordance with the technical data.
  For other protection equipment and SCCRs (Short Circuit Current Rating) for individual drives, see:
  Protective Devices for SINAMICS S200 Product Line (https://support.industry.siemens.com/cs/ww/en/ps/29596/man)
- This device must be installed in an enclosure that provides an environment with degree of pollution 2 (controlled).
- Maximum rated temperature 45 °C.
- The device provides overtemperature and overload protection.
- Use copper wires with a permissible temperature of 75 °C for all power cables. You can also use cables with a higher rated temperature value. It is not permissible to reduce the conductor cross-section.

Converter variant of 3 AC 380 V ... 480 V

For US/Canadian installations (UL/cUL): The products are cULus-listed under File E355661.

- Suitable for use in a circuit that cannot provide more than 65 kA rms (symmetrical), max. 480 V.
- Protection of the branch circuit for individual drives must be guaranteed using Class J fuses in accordance with the technical data.
- For other protection equipment and SCCRs (Short Circuit Current Rating) for individual drives, see:
  Protective Devices for SINAMICS S200 Product Line (https://support.industry.siemens.com/cs/ww/en/ps/29596/man)
- This device must be installed in an enclosure that provides an environment with degree of pollution 2 (controlled).
- Maximum rated temperature 45 °C. Maximum height 4000 m.

- The device provides overtemperature and overload protection.
- Use copper wires with a permissible temperature of 75 °C for all power cables. You can also use cables with a higher rated temperature value. It is not permissible to reduce the conductor cross-section.

Additional requirements relating to CSA compliance:

Maximum height for CSA: 2000 m.

Motor overload protection according to UL 61800-5-1 Ed.2

For the settings required to activate the motor overload protection according to UL 61800-5-1 Ed.2, see Section "Cooling (Page 573)".

MOTION-CONNECT connection system

The recommended assignment of motors and cables can be found in Section "Device combinations (Page 55)".

Other assignments are not possible.

The technical parameters of the cables are tailored to the requirements of the motors and verified by system tests. For detailed information, see Section "Technical data of MOTION-CONNECT cables (Page 636)".

A.2 EMERGENCY OFF and EMERGENCY STOP

Overview

In plants, systems and machines a distinction must be made between "EMERGENCY OFF" and "EMERGENCY STOP".

The Safe Torque Off (STO) and Safe Stop 1 (SS1) Safety Integrated Functions are suitable for implementing an "EMERGENCY STOP", but are not suitable for implementing an "EMERGENCY OFF".

Description of function

IEC 60204-1 defines "EMERGENCY OFF" and "EMERGENCY STOP":

- "EMERGENCY OFF" and "EMERGENCY STOP" are actions taken in an emergency.
- "EMERGENCY OFF" and "EMERGENCY STOP" reduce different risks in the machine or system:
  - "EMERGENCY OFF" reduces the risk from electric shock.
  - "EMERGENCY STOP" reduces the risk from unexpected movement.

Table A-1 The distinction between "EMERGENCY OFF" and "EMERGENCY STOP"

Action:	**EMERGENCY OFF**	**EMERGENCY STOP**	**EMERGENCY STOP**
		Stop category 0 according to IEC 60204-1	**Stop category 1 according to IEC 60204-1**
Risk:	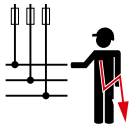 Electric shock	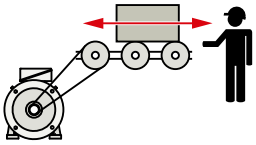 Unexpected motion	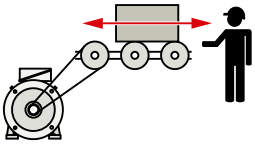 Motion
Measure to minimize risk:	**Switch off voltage** Switch off hazardous voltages completely or in part	**Prevent movement** Prevent any hazardous movement	**Stop movement** Stop hazardous movement and prevent any restart.
Classic solution:	Switch off the voltage: 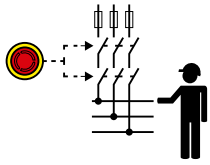	Switch off the power supply of the drive: 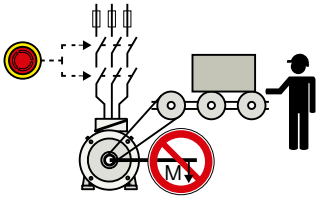	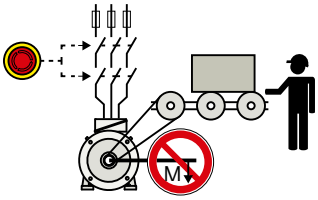 Brake the motor and switch off the drive power supply

Action:	**EMERGENCY OFF**	**EMERGENCY STOP**	**EMERGENCY STOP**
		Stop category 0 according to IEC 60204-1	**Stop category 1 according to IEC 60204-1**
Solution with the STO or SS1 Safety Integrated function integrated into the drive:	STO and SS1 are not suitable for switching off an electrical voltage.	Select STO: 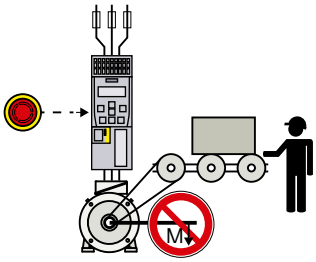	Select SS1: 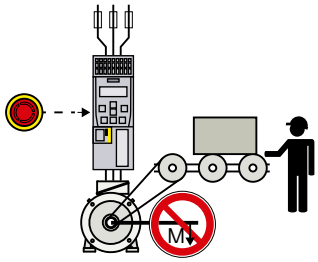
		It is permissible that you also switch off the converter supply voltage. However, switching off the voltage is not required as a risk reduction measure.	

A.3 Parameters

A.3.1 Explanation of the list of parameters

Overview

The representation of a parameter includes as a maximum the information listed below. Depending on the specific parameter, some of the listed information is not applicable.

The parameters are displayed according to the following example:

---

rxxxx **Parameter name**

Variant:		Product variant	
Data type: Integer16		**Visible in:** Standard display	
Read permission:		Read drive data or acknowledge messages	
Write permission:		Edit device configuration or drive applications	
Can be changed in the operating state:		Ready for operation	
Parameter group:		Name of the group(s)	
Unit: -			
Min:	**Max:**		**Factory setting:**
-	-		-

Description:	Text			
Value:	0: Name of value 0 10: Name of value 10			
Recommendation:	Text			
Index:	[0] = Name and meaning of index 0 [1] = Name and meaning of index 1			
Bit array:	**Bit**	**Signal name**	**1 signal**	**0 signal**
	00	Name of bit 0	Yes	No
	01	Name of bit 1	Yes	No
Dependency:	Text See also: pxxx, rxxx See also: Fxxxxx, Axxxxx, Cxxxxx			
Danger/Caution/ Warning/Notice:	Safety-related note corresponding to the warning note concept			
Note:	Text			

Description of function

Parameter number

The parameter number is made up of a "p", "r" or "c", followed by several numbers and optionally an index and bit array.

The parameter number has the following syntax: pxxxx[0...n], rxxxx[0...n], cxxxx[0...n], pxxxx.0...15 or rxxxx.0...15, cxxxx.0...15, pxxxx[0...n].0...15 or rxxxx[0...n].0...15, cxxxx[0...n].0...15.

Examples of representation in the parameter list:

- p... Adjustable parameters (read and write)
- r... Display parameters (read-only)

- c... Display parameters (read-only)
- p0972 Adjustable parameter 972
- p0489[0...2] Adjustable parameter 489, index 0 to 2
- r0945 Display parameter 945
- r0196[0...255].0...15 Display parameter with index 0 to 255 and bit array from bit 0 to bit 15
- r5613.0...1 Display parameter 5613 with bit array from bit 0 to bit 1
- c8997[0...2] Display parameter 8997, index 0 to 2

Other examples of the notation in the documentation:

- p9563[1] Adjustable parameter 9563, index 1
- r0196[1].5 Display parameter 196, index 1, bit 5
- r0964[2] Display parameter 964, index 2
- p5611.1 Adjustable parameter 5611, bit 1

Parameter name

Shows the parameter name in the long form.

Variant

Specifies the product variant for which the parameter is valid. This information is not applicable if a parameter is the same for all product variants used in the parameter list.

Data type

Each parameter is assigned one of the following data types:

- Integer8 8-bit integer
- Integer16 16-bit integer
- Integer32 32-bit integer
- Unsigned8 8-bit without sign
- Unsigned16 16-bit without sign
- Unsigned32 32-bit without sign
- FloatingPoint32 32-bit floating-point number
- FloatingPoint64 64-bit floating-point number

Visible in

You change the number of parameters displayed in the commissioning tool via:

- Standard display
  Only the basic parameters are displayed.
- Extended display
  The full scope of parameters is displayed.

Permission

The user and rights management (UMAC) controls access to the parameters.

You require runtime function rights to read and set parameters.

The following read permissions are available:

- Read drive data or acknowledge messages

The following write permissions are available:

- Control drive in manual mode
- Perform drive diagnostics
- Perform firmware update
- Create backup or load drive data to the commissioning tool
- Edit device configuration or drive applications
- Edit Safety Integrated application
- Edit web server configuration
- Manage users and roles
- Edit drive data encryption
- Edit other security settings
- Read security events

Runtime function rights depend on user roles, which are assigned in the commissioning tool being used. As a consequence, setting parameters can be write-protected.

The commissioning tool provides additional support.

Can be changed in the operating state

A parameter can only be changed in this operating state. The change only becomes active after exiting the state.

The following states exist:

- Operation
  The pulses have been enabled.
- Ready for operation
  The pulses are not enabled and state "Commissioning" is not active.
- Commissioning
  Commissioning takes place.
  The pulses cannot be enabled.

Parameter group

A parameter group contains parameters that are functionally associated with one another.

Unit

Shows the default unit of the parameter. For adjustable parameters, the unit is additionally specified according to the values (Min, Max, Factory setting) in square brackets.

Min, Max, Factory setting

The parameter value "when shipped" is specified under "Factory setting" with the relevant unit in square parentheses.

The value can be adjusted within the range defined by "Min" and "Max".

This information is not applicable for display parameters.

Min	Minimum value of the parameter [unit]
Max	Maximum value of the parameter [unit]
Factory setting	Value when delivered [unit]

Description

Explanation of the function of a parameter.

Value

List of the possible values of a parameter.

Recommendation

Information about recommended settings.

Index

Indexed parameters represent the name and its significance for each individual index.

The following applies to the values (Min, Max, Factory setting) of indexed adjustable parameters:

- Min, Max:
  The adjustment range and the unit apply to all indices.
- Factory setting:
  When all indices have the same factory setting, index 0 is specified with the unit to represent all indices.
  When the indices have different factory settings, they are all listed individually with the unit.

Bit array

For parameters with bit fields, the following information is provided about each bit:

- Bit number and signal name
- Meaning for signal states 0 and 1
- Function diagram (optional)
  The signal is shown in the function diagram.

Dependency

Specification of interactions that this parameter can potentially have:

- Effect on other parameters
- Dependent on other parameter settings (dependent on the selected functions)
- List of other parameters to be considered
- List of faults and alarms to be considered

Danger/Caution/Warning/Notice

The safety-relevant notes correspond to the warning note concept and contain the following information:

- Important information that must be observed to avoid the risk of physical injury or material damage.
- Information that must be observed to avoid any problems.
- Information that the user may find useful.

Note

Additional explanations about parameters

A.3.2 Parameter list

Product: SINAMICS S200, Version: 605020000, Language: eng
Objects: S200 Basic PTI, S200 PTI

r0002 **Drive operating display**

Data type: Integer16 **Visible in:** Standard display
Read permission: Read drive data or acknowledge messages
Parameter group: Status parameters, Diagnostics general, Drive enable signals
Unit: -

Description: Operating display for the drive.

Value:

0:	Operation - Everything enabled
10:	Operation - Set "enable setpoint" = "1"
11:	Operation - Set "Enable speed controller" = "1"
12:	Operation - RFG frozen, set "RFG start" = "1"
13:	Operation - Set "enable RFG" = "1"
14:	Operation - MotID, excitation running or brake opens, SS2
15:	Operation - Open brake (p1215)
16:	Operation - Withdraw braking with OFF1 using "ON/OFF1" = "1"
17:	Operation - Braking with OFF3 can only be interrupted with OFF2
18:	Operation - Brake on fault, remove fault, acknowledge
21:	Ready for operation - Set "Enable operation" = "1"
23:	Ready for operation - Set "Infeed operation" = "1"
31:	Ready for switching on - Set "ON/OFF1" = "0/1"
35:	Switching on inhibited - Carry out first commissioning
41:	Switching on inhibited - Set "ON/OFF1" = "0"
42:	Switching on inhibited - Set "Operating condition/OFF2" = "1"
43:	Switching on inhibited - Set "Operating condition/OFF3" = "1"
44:	Switching on inhibited - Supply STO terminal w/ 24 V (hardware)
45:	Switching on inhibited - Rectify fault, acknowledge fault, STO
46:	Switching on inhibited - Exit commissioning mode
60:	Drive deactivated/not operational
70:	Initialization
200:	Wait for run-up
250:	Device signals a topology error

Dependency: See also: r0046

NOTICE
For several missing enable signals, the corresponding value with the highest number is displayed.

Note
OC: Operating condition
EP: Enable Pulses (pulse enable)
RFG: Ramp-function generator
COMM: Commissioning
MotID: Motor data identification

r0020 Speed setpoint smoothed

Data type: FloatingPoint32 **Visible in:** Standard display
Read permission: Read drive data or acknowledge messages
Parameter group: Mode signals / displays
Unit: rpm

Description: Displays the currently smoothed speed setpoint at the input of the speed controller or U/f characteristic (after the interpolator).

Dependency: See also: r1438

Note
Smoothing time constant = 100 ms
The signal is not suitable as a process quantity and may only be used as a display quantity.
The speed setpoint is available smoothed (r0020) and unsmoothed (r1438).

r0021 Speed actual value smoothed

Data type: FloatingPoint32 **Visible in:** Standard display
Read permission: Read drive data or acknowledge messages
Parameter group: Diagnostics, Mode signals / displays
Unit: rpm

Description: Display for the smoothed actual value of the motor speed.

Dependency: See also: r0063

Note
Smoothing time constant = 100 ms
The speed actual value is available smoothed (r0021) and unsmoothed (r0063).

r0026 DC link voltage smoothed

Data type: FloatingPoint32 **Visible in:** Standard display
Read permission: Read drive data or acknowledge messages
Parameter group: Brake control, Mode signals / displays
Unit: V

Description: Displays the smoothed actual value of the DC link voltage.

Dependency: See also: r0070

NOTICE
This smoothed signal is not suitable for diagnostics or evaluation of dynamic operations. In this case, the unsmoothed value should be used.

Note
Smoothing time constant = 100 ms
The signal is not suitable as a process quantity and may only be used as a display quantity.
The DC link voltage is available smoothed (r0026) and unsmoothed (r0070).

r0027 Absolute actual current smoothed

Data type: FloatingPoint32 **Visible in:** Standard display
Read permission: Read drive data or acknowledge messages
Parameter group: Mode signals / displays, Power unit
Unit: Arms

Description: Displays the smoothed absolute current actual value.

Dependency: See also: r0068

NOTICE
This smoothed signal is not suitable for diagnostics or evaluation of dynamic operations. In this case, the unsmoothed value should be used.

Note
ALM_S120, S_INF, VECTOR: Smoothing time constant = 300 ms
SERVO: Smoothing time constant = 100 ms
The signal is not suitable as a process quantity and may only be used as a display quantity.
The absolute current actual value is available smoothed (r0027) and unsmoothed (r0068).

r0031 Actual torque smoothed

Data type: FloatingPoint32 **Visible in:** Standard display
Read permission: Read drive data or acknowledge messages
Parameter group: Brake control, Mode signals / displays
Unit: Nm

Description: Displays the smoothed torque actual value.

Dependency: See also: r0080

Note
Smoothing time constant = 100 ms
The signal is not suitable as a process quantity and may only be used as a display quantity.
The torque actual value is available smoothed (r0031) and unsmoothed (r0080).

r0032 Active power actual value smoothed

Data type: FloatingPoint32 **Visible in:** Standard display
Read permission: Read drive data or acknowledge messages
Parameter group: Mode signals / displays
Unit: kW

Description: Display for the smoothed actual value of the active power.

Dependency: See also: r0082

Note
The active power is available smoothed (r0032 with 100 ms, r0082[1] with 1 ms) and unsmoothed (r0082[0]).

r0034 Motor utilization thermal

Data type: FloatingPoint32 **Visible in:** Standard display
Read permission: Read drive data or acknowledge messages
Parameter group: Motor temperature, Mode signals / displays
Unit: %

Description: Displays the thermal motor utilization taking into account the ambient temperature set in p0613.

Dependency: See also: p0613
See also: F07011, A07012

NOTICE
After the drive is switched on, the system starts to determine the motor temperature with an assumed model value. This means that the value for the motor utilization is only valid after a stabilization time.

r0035 Motor temperature

Data type: FloatingPoint32 **Visible in:** Standard display
Read permission: Read drive data or acknowledge messages
Parameter group: Motor temperature, Mode signals / displays
Unit: °C

Description: Displays the actual temperature in the motor.

r0036[0...2] Power unit overload

Data type: FloatingPoint32 **Visible in:** Extended display
Read permission: Read drive data or acknowledge messages
Parameter group: Mode signals / displays, Power unit
Unit: %

Description: Display when the power unit is overloaded.
A reference value is defined for the monitoring functions.
An overload (0 %) is not displayed if the reference value is not exceeded.
The display value increases if the reference value is exceeded.
An alarm is output if an overload is active over a certain time period; a fault is output when 100% is reached.

Index: [0] = I2t (AC)
[1] = Reserved
[2] = Reserved

Dependency: See also: p0290
See also: F30005, A30256, A30257, F30258, A30267, F30268

Note
For index [0]:
This index shows the actual state of the I2t monitoring on the AC side.
The reference value represents the AC current that the power unit can permanently provide, without the influence of switching losses (e.g. the continuously permissible current of capacitors, inductances, busbars, etc.).

For index [1]:
This index shows the actual state of the active power monitoring.
The reference value represents the active power that the power unit can continuously provide.

For index [2]:
This index shows the actual state of the I2t monitoring on the DC side.
The reference value represents the DC current that can continuously flow in the DC link.

r0037[0...10] Power unit temperatures

Data type: FloatingPoint32 **Visible in:** Extended display
Read permission: Read drive data or acknowledge messages
Parameter group: Mode signals / displays, Power unit
Unit: °C

Description: Displays the temperatures in the power unit.

Index:
[0] = Inverter maximum value
[1] = Depletion layer maximum value
[2] = Reserved
[3] = Reserved
[4] = Interior of power unit
[5] = Reserved
[6] = Reserved
[7] = Depletion layer maximum value 1
[8] = Depletion layer maximum value 2
[9] = Reserved
[10] = Reserved

Note
r0037[0]: Maximum value of the inverter temperatures.
r0037[1]: Maximum value of the depletion layer temperatures.
In the case of a fault, the particular shutdown threshold depends on the power unit, and cannot be read out.

r0039[0...2] Energy display

Data type: FloatingPoint32 **Visible in:** Standard display
Read permission: Read drive data or acknowledge messages
Parameter group: Mode signals / displays, Power loss optimization
Unit: kWh

Description:
Display for the energy values at the drive output terminals.

Index:
[0] = Energy balance (sum)
[1] = Energy drawn
[2] = Energy fed back

Note
For index [0]:
Difference between the energy drawn and energy that is fed back.

r0044 Thermal converter utilization

Data type: FloatingPoint32 **Visible in:** Standard display
Read permission: Read drive data or acknowledge messages
Parameter group: Mode signals / displays, Power unit
Unit: %

Description:
Displays the thermal converter utilization as a percentage.
With this value, various thermal monitoring functions are taken into account.

Dependency:
See also: r0034

Note
The thermal motor utilization is displayed in parameter r0034.

r0046.0...30 Missing enable signals

Data type: Unsigned32 **Visible in:** Standard display
Read permission: Read drive data or acknowledge messages
Parameter group: Control/status words, Drive enable signals
Unit: -

Description:
Displays the missing enable signals. All enable signals are required to operate the drive. The enable signals are set by the control.

Bit array:

Bit	Signal name	1 signal	0 signal
00	OFF1 enable missing	Yes	No

01	OFF2 enable missing	Yes	No
02	OFF3 enable missing	Yes	No
03	Operation enable missing	Yes	No
08	Safety enable missing	Yes	No
10	Ramp-function generator enable missing	Yes	No
12	Speed setpoint enable missing	Yes	No
16	OFF1 enable internal missing	Yes	No
17	OFF2 enable internal missing	Yes	No
18	OFF3 enable internal missing	Yes	No
19	Pulse enable internal missing	Yes	No
21	STOP2 enable internal missing	Yes	No
24	License missing	Yes	No
26	Drive inactive or not operational	Yes	No
28	Brake open missing	Yes	No
30	Speed controller enable missing	Yes	No

Dependency: See also: r0002

Note
The value r0046 = 0 indicates that all enable signals for this drive are present.
Bit 00 = 1 (enable signal missing), if:
- OFF1 from the PROFINET interface missing.
- Switching on inhibited is active.

Bit 01 = 1 (enable signal missing), if:
- OFF2 from the PROFINET interface missing.

Bit 02 = 1 (enable signal missing), if:
- OFF3 from the PROFINET interface missing.

Bit 03 = 1 (enable signal missing), if:
- "Enable operation" from the PROFINET interface missing.

Bit 08 = 1 (enable signal missing), if:
- Safety functions have been enabled and STO is active.
- A safety-relevant message with STO as response is active.
STO enabled via terminals:
- Pulse enable via the STO terminals has a 0 signal.
- Additional details relating to the reason that STO was selected, see parameter r10352.

Bit 10 = 1 (enable signal missing), if:
- "Enable ramp-function generator" from the PROFINET interface missing.

Bit 12 = 1 (enable signal missing), if:
- "Enable setpoint" from the PROFINET interface missing.

Bit 16 = 1 (enable signal missing), if:
- There is an OFF1 fault response. The system is only enabled if the fault is removed and was acknowledged and the "switching on inhibited" withdrawn with OFF1 = 0.

Bit 17 = 1 (enable signal missing), if:
- The commissioning mode is selected.
- There is an OFF2 fault response.
- The drive is inactive or not capable of operation.

Bit 18 = 1 (enable signal missing), if:
- OFF3 has still not been completed or an OFF3 fault response is present.

Bit 19 = 1 (internal pulse enable missing), if:
- Synchronization still not completed.

Bit 21 = 1 (enable signal missing), if:
The pulses have been enabled and the speed setpoint has still not been enabled, because:
- The holding brake opening time has still not elapsed.
- The encoder has not been calibrated (synchronous motor).

Bit 26 = 1 (enable signal missing), if:
- The drive is inactive or not capable of operation.
- The drive is in the "PROFIenergy energy-saving mode".

Bit 28 = 1 (enable signal missing), if:
- The holding brake is closed or has still not been opened.

Bit 30 = 1 (speed controller inhibited), if one of the following reasons is present:
- Pulse enable missing

- The function generator with current setpoint is active.
- The measuring function "current controller reference frequency characteristic" is active.

r0060 Speed setpoint before the setpoint filter

Data type: FloatingPoint32 **Visible in:** Extended display
Read permission: Read drive data or acknowledge messages
Parameter group: Mode signals / displays, Speed setpoint filter
Unit: rpm

Description: Displays the actual, unsmoothed speed setpoint at the speed controller input.

r0061[0...1] Actual speed unsmoothed

Data type: FloatingPoint32 **Visible in:** Extended display
Read permission: Read drive data or acknowledge messages
Parameter group: Encoder evaluation, Mode signals / displays
Unit: rpm

Description: Displays the unsmoothed actual speed values sensed by the encoders.
Index: [0] = Motor encoder
[1] = PTI

r0062 Speed setpoint after the filter

Data type: FloatingPoint32 **Visible in:** Extended display
Read permission: Read drive data or acknowledge messages
Parameter group: Speed controller, Mode signals / displays, Speed setpoint filter
Unit: rpm

Description: Displays the speed setpoint after the setpoint filters.

r0063 Speed actual value smoothed

Data type: FloatingPoint32 **Visible in:** Extended display
Read permission: Read drive data or acknowledge messages
Parameter group: Speed controller, Speed actual value filter, Mode signals / displays
Unit: rpm

Description: Display for the smoothed speed actual value.
Dependency: See also: r0021, r0061, p1441

Note
The smoothing time is set in p1441.
The speed actual value is available strongly smoothed (r0021) and unsmoothed (r0061).

r0068 Absolute current actual value

Data type: FloatingPoint32 **Visible in:** Extended display
Read permission: Read drive data or acknowledge messages
Parameter group: Mode signals / displays
Unit: Arms

Description: Displays actual absolute current.
Dependency: See also: r0027

NOTICE
The value is updated with a sampling time of 1 ms.

Note
Absolute current value = sqrt(Iq^2 + Id^2)
The absolute current actual value is available smoothed (r0027) and unsmoothed (r0068).

r0070 Actual DC link voltage

Data type: FloatingPoint32 **Visible in:** Extended display
Read permission: Read drive data or acknowledge messages
Parameter group: Vdc-min/max controller, Mode signals / displays, Power unit, Vdc controller
Unit: V

Description: Display for the measured actual value of the DC link voltage.

Dependency: See also: r0026

Note
The DC link voltage is available smoothed (r0026) and unsmoothed (r0070).

r0072 Output voltage

Data type: FloatingPoint32 **Visible in:** Extended display
Read permission: Read drive data or acknowledge messages
Parameter group: Current controller, Mode signals / displays, Power unit
Unit: Vrms

Description: Display for the actual output voltage of the power unit.

r0076 Current actual value field-generating

Data type: FloatingPoint32 **Visible in:** Extended display
Read permission: Read drive data or acknowledge messages
Parameter group: Current controller
Unit: Arms

Description: Display for the field-generating current actual value.

r0077[0...1] Current setpoint torque-generating

Data type: FloatingPoint32 **Visible in:** Extended display
Read permission: Read drive data or acknowledge messages
Parameter group: Current controller, Mode signals / displays
Unit: Arms

Description: Displays the torque/force-generating current setpoint.

Index: [0] = Current setpoint
[1] = Current setpoint model

r0078[0...1] Current actual value torque-generating

Data type: FloatingPoint32 **Visible in:** Extended display
Read permission: Read drive data or acknowledge messages
Parameter group: Mode signals / displays
Unit: Arms

Description: Display for the actual value of the torque-generating current Iq.

Index: [0] = Unsmoothed
[1] = Smoothed with 1 ms

r0079[0...1] Torque setpoint total

Data type: FloatingPoint32 **Visible in:** Extended display

Read permission: Read drive data or acknowledge messages
Parameter group: Torque limiting, Mode signals / displays
Unit: Nm

Description: Displays the torque setpoint at the output of the speed controller.

Index: [0] = Unsmoothed
[1] = Smoothed with 1 ms

r0080 Torque actual value

Data type: FloatingPoint32 **Visible in:** Extended display
Read permission: Read drive data or acknowledge messages
Parameter group: Motor model, Mode signals / displays
Unit: Nm

Description: Displays the actual torque value.

Dependency: See also: r0031

Note
The value is available smoothed (r0031) and unsmoothed (r0080).

r0081 Torque utilization

Data type: FloatingPoint32 **Visible in:** Extended display
Read permission: Read drive data or acknowledge messages
Parameter group: Torque limiting, Mode signals / displays
Unit: %

Description: Displays the torque utilization as a percentage.
The torque utilization is obtained from the required smoothed torque referred to the torque limit.

Note
The torque utilization is obtained from the required torque referred to the torque limit as follows:
- Positive torque: r0081 = ((r0079 + p1532) / (r1538 - p1532)) * 100 %
- Negative torque: r0081 = ((-r0079 + p1532) / (-r1539 + p1532)) * 100 %
The calculation of the torque utilization depends on the selected smoothing time constant (1 ms).

r0082[0...3] Active power actual value

Data type: FloatingPoint32 **Visible in:** Extended display
Read permission: Read drive data or acknowledge messages
Parameter group: Mode signals / displays
Unit: kW

Description: Displays the actual active power.

Index: [0] = Unsmoothed
[1] = Smoothed with 1 ms
[2] = Power drawn
[3] = Power drawn smoothed

Dependency: See also: r0032

Note
The mechanical active power is available smoothed (r0032 with 100 ms, r0082[1] with 1 ms) and unsmoothed (r0082[0]).
For index [3]:
Smoothing time constant = 0.25 ms

r0196[0...255].0...15 Topology component status

Data type: Unsigned32 **Visible in:** Extended display

Read permission: Read drive data or acknowledge messages
Parameter group: Diagnostics general
Unit: -

Description: Displays the status of the components.
r0196[0]: Group status of all components
r0196[1]: Status of component with component number 1
...
r0196[255]: Status of component with component number 255

Bit array:

Bit	Signal name	1 signal	0 signal
00	Component status bit 0	High	Low
01	Component status bit 1	High	Low
02	Component status bit 2	High	Low
03	Component status bit 3	High	Low
04	Component state	Active	Inactive/parking
06	Topology problem active	Yes	No
07	Part of the target topology	Yes	No only act topo
08	Alarm present	Yes	No
09	Safety message present	Yes	No
10	Fault present	Yes	No
11	Alarm class bit 0	High	Low
12	Alarm class bit 1	High	Low
13	Maintenance required	Yes	No
14	Maintenance urgently required	Yes	No
15	Fault gone/can be acknowledged	Yes	No

Note
For bit 03 ... 00:
Bit 3, 2, 1, 0 = 0, 0, 0, 0 --> component not available.
Bit 3, 2, 1, 0 = 0, 0, 0, 1 --> run up, acyclic communications (LED = orange).
Bit 3, 2, 1, 0 = 0, 0, 1, 0 --> operating mode, cyclic communications (LED = green).
Bit 3, 2, 1, 0 = 0, 0, 1, 1 --> alarm (LED = green).
Bit 3, 2, 1, 0 = 0, 1, 0, 0 --> fault (LED = red).
Bit 3, 2, 1, 0 = 0, 1, 0, 1 --> detection via LED and operating mode (LED = green/orange).
Bit 3, 2, 1, 0 = 0, 1, 1, 0 --> detection via LED and alarm (LED = green/orange).
Bit 3, 2, 1, 0 = 0, 1, 1, 1 --> detection via LED and fault (LED = red/orange).
Bit 3, 2, 1, 0 = 1, 0, 0, 0 --> firmware being downloaded (LED = green/red with 0.5 Hz).
Bit 3, 2, 1, 0 = 1, 0, 0, 1 --> firmware download completed, wait for POWER ON (LED = green/red with 2.0 Hz).
For bits 12 ... 11:
These status bits are used for the classification of internal alarm classes and are intended for diagnostic purposes only on certain automation systems with integrated SINAMICS functionality.

p0201[0] Power unit code number

Data type: Unsigned16 **Visible in:** Extended display
Read permission: Read drive data or acknowledge messages
Write permission: Edit device configuration or drive applications
Can be changed in the operating state: Commissioning
Parameter group: Power unit
Unit: -

Min:	Max:	Factory setting:
0	65535	0

Description: Sets the actual code number of the power unit being used.

p0210 Device supply voltage

Data type: Unsigned16	**Visible in:** Standard display	
Read permission:	Read drive data or acknowledge messages	
Write permission:	Edit device configuration or drive applications	
Can be changed in the operating state:	Ready for operation	
Parameter group:	Power unit, Quick commissioning	
Unit: V		
Min:	**Max:**	**Factory setting:**
1 [V]	63000 [V]	400 [V]

Description: Sets the device supply voltage.
The voltage between two phases should be entered as the device supply voltage.
This setting is important for operating with voltages that are less than the voltage range for which the drive is designed.

Note
Setting ranges for p0210 as a function of the rated power unit voltage:
U_rated = 230 V:
- p0210 = 200 ... 240 V
U_rated = 400 V:
- p0210 = 380 ... 480 V (wide voltage range, in addition to 200 ... 240 V)

p0215 Braking resistor selection

Data type: Integer16	**Visible in:** Standard display	
Read permission:	Read drive data or acknowledge messages	
Write permission:	Edit device configuration or drive applications	
Can be changed in the operating state:	Commissioning	
Parameter group:	Dynamic braking, Quick commissioning	
Unit: -		
Min:	**Max:**	**Factory setting:**
3	10	10

Description: Sets the external braking resistor.

Value:
3: Third-party braking resistor (with software monitoring)
10: No monitoring (external braking resistor)

Dependency: See also: p0216, p0218, p0219

Note
p0215 = 3:
An externally connected braking resistor is controlled and also thermally monitored per software.
Parameters p0216, p0218 and p0219[0] and p0219[1] must be set in order that the monitoring functions. Chopper operation is not possible if the values are not set.
p0215 = 10:
The externally connected braking resistor is not monitored.
If the power unit has an internal braking resistor, then this is monitored.

p0216 Braking resistance value

Data type: FloatingPoint32	**Visible in:** Extended display
Read permission:	Read drive data or acknowledge messages
Write permission:	Edit device configuration or drive applications
Can be changed in the operating state:	Commissioning

Parameter group:	Dynamic braking, Quick commissioning	
Unit: ohm		
Min:	**Max:**	**Factory setting:**
0.0 [ohm]	1000.0 [ohm]	0.0 [ohm]

Description: Sets the resistance value of a connected external braking resistor.

Dependency: The parameter is only relevant for p0215 = 3.

p0218 Braking resistor duration at maximum power

Data type: FloatingPoint32	**Visible in:** Extended display	
Read permission:	Read drive data or acknowledge messages	
Write permission:	Edit device configuration or drive applications	
Can be changed in the operating state:	Commissioning	
Parameter group:	Dynamic braking, Quick commissioning	
Unit: s		
Min:	**Max:**	**Factory setting:**
0.00 [s]	2000.00 [s]	0.00 [s]

Description: Sets the maximum duration when operating the braking resistor at its maximum power level.

Dependency: The parameter is only relevant for p0215 = 3.

p0219[0...1] Braking resistor braking power

Data type: FloatingPoint32	**Visible in:** Extended display	
Read permission:	Read drive data or acknowledge messages	
Write permission:	Edit device configuration or drive applications	
Can be changed in the operating state:	Commissioning	
Parameter group:	Dynamic braking, Quick commissioning	
Unit: kW		
Min:	**Max:**	**Factory setting:**
0.00 [kW]	20000.00 [kW]	0.00 [kW]

Description: Sets the braking power of the connected braking resistor.

Index:
[0] = Maximum power
[1] = Rated power

r0277[0...2] Power unit fan wear counter

Data type: FloatingPoint32	**Visible in:** Extended display	
Read permission:	Read drive data or acknowledge messages	
Parameter group:	Power unit	
Unit: %		

Description: Displays the wear counter of the fan in the power unit.
After a fan has been replaced, using an appropriate button, the value can be reset in the commissioning tool to 0.

Index:
[0] = Heat sink fan
[1] = Auxiliary fan 1
[2] = Auxiliary fan 2

Dependency: See also: A30042

p0290 Power unit overload response

Data type: Integer16	**Visible in:** Extended display	
Read permission:	Read drive data or acknowledge messages	

Write permission:	Edit device configuration or drive applications	
Can be changed in the operating state:	Ready for operation	
Parameter group:	Power unit	
Unit: -		
Min:	**Max:**	**Factory setting:**
0	1	0

Description:

Sets the response to a thermal overload condition of the power unit.

The following quantities can result in a response to thermal overload:

- Heat sink temperature (r0037[0]).
- Chip temperature (r0037[1]).
- Power unit overload I2t (r0036).

Possible measures to avoid thermal overload:

- Reduction of the output current limit (for closed-loop speed/velocity or torque/force control).
- Reduction of the pulse frequency.

A reduction, if parameterized, is always realized after an appropriate alarm is output.

For p0290 = 0:

When a temperature alarm threshold is exceeded, the output current is reduced, and in turn, the output frequency. If the current reduction is not sufficient to thermally relieve the power unit, when the drive reaches the temperature fault threshold it switches off.

This setting is not suitable for drives that require a constant torque.

Application:

Pumps, fans

For p0290 = 1:

The power unit operates at the required operating point. When the fault threshold is reached, the drive switches off and an appropriate fault is output.

Application:

Drive applications where, as a result of the underlying process, no setpoint deviations of individual drives in the group are permitted - or where the pulse frequency must be strictly maintained.

Value:

0: Reduce output current

1: No reduction shutdown when overload threshold is reached

Dependency:

For a thermal power unit overload, an appropriate alarm or fault is output.

See also: r0036, r0037

NOTICE
If the thermal overload of the power unit is not sufficiently reduced by the actions taken, the drive is always shut down. This means that the power unit is always protected irrespective of the setting of this parameter.

Note

When the motor data identification routine is selected, parameter p0290 cannot be changed.

For p0290 = 0:

This is setting is only practical if the load decreases with decreasing speed (e.g. for applications with variable torque such as for pumps and fans).

r0296 DC link voltage undervoltage threshold

Data type: Unsigned16	**Visible in:** Extended display
Read permission:	Read drive data or acknowledge messages
Parameter group:	Power unit
Unit: V	

Description:

Threshold to detect a DC link undervoltage.

If the DC link voltage falls below this threshold, the drive unit is tripped due to a DC link undervoltage condition.

Dependency: See also: F30003

Note
The actual threshold value depends on the device type and the selected device supply voltage (p0210).

r0297 DC link voltage overvoltage threshold

Data type: Unsigned16 **Visible in:** Extended display
Read permission: Read drive data or acknowledge messages
Parameter group: Power unit
Unit: V

Description: Threshold to detect a DC link overvoltage.
If the DC link voltage exceeds the threshold specified here, the drive device is tripped due to DC link overvoltage.

Dependency: See also: F30002

p0300[0] Motor type selection

Data type: Integer16 **Visible in:** Standard display
Read permission: Read drive data or acknowledge messages
Write permission: Edit device configuration or drive applications
Can be changed in the operating state: Commissioning
Parameter group: Motor data, Quick commissioning
Unit: -

Min:	Max:	Factory setting:
0	10000	0

Description: Selects the motor type or start to read in the motor parameters for a motor with self-identifying data (p0300 = 10000).
For p0300 < 10000 the following applies:
The first digit of the parameter value always defines the general motor type and corresponds to the third-party motor belonging to a motor list:
2 = rotating synchronous motor

Value:
0: No motor
2: Synchronous motor
2120: 1FL2 synchronous motor
10000: Motor with data set

Dependency: See also: p0301

p0301[0] Motor code number selection

Data type: Unsigned32 **Visible in:** Standard display
Read permission: Read drive data or acknowledge messages
Write permission: Edit device configuration or drive applications
Can be changed in the operating state: Commissioning
Parameter group: Motor data, Quick commissioning
Unit: -

Min:	Max:	Factory setting:
0	99999999	0

Description: Code number of the connected motor, whose data was accepted when commissioning.

Dependency: Code numbers are only possible for motor types that correspond to the motor type selected in p0300.
See also: p0300

Note
For a motor with self-identifying data, p0301 cannot be changed. p0301 is automatically written to the code number of the motor parameter read in (r0302) if p0300 is set to 10000. For other values, the commissioning routine cannot be exited.

r0302[0] Motor code (identified)

Data type: Unsigned32 **Visible in:** Standard display
Read permission: Read drive data or acknowledge messages
Parameter group: Motor data, Quick commissioning
Unit: -

Description: Displays the identified motor code number.
When the drive powers up, the motor code is read out the motor. For r0302 = 0, the motor data were not identified.

p0304[0] Rated motor voltage

Data type: FloatingPoint32 **Visible in:** Standard display
Read permission: Read drive data or acknowledge messages
Write permission: Edit device configuration or drive applications
Can be changed in the operating state: Commissioning
Parameter group: Motor data, Quick commissioning
Unit: Vrms

Min:	Max:	Factory setting:
0 [Vrms]	20000 [Vrms]	0 [Vrms]

Description: Displays the rated motor voltage.

p0305[0] Rated motor current

Data type: FloatingPoint32 **Visible in:** Standard display
Read permission: Read drive data or acknowledge messages
Write permission: Edit device configuration or drive applications
Can be changed in the operating state: Commissioning
Parameter group: Motor data, Quick commissioning
Unit: Arms

Min:	Max:	Factory setting:
0.00 [Arms]	10000.00 [Arms]	0.00 [Arms]

Description: Displays the rated motor current.

p0307[0] Rated motor power

Data type: FloatingPoint32 **Visible in:** Standard display
Read permission: Read drive data or acknowledge messages
Write permission: Edit device configuration or drive applications
Can be changed in the operating state: Commissioning
Parameter group: Motor data, Quick commissioning
Unit: kW

Min:	Max:	Factory setting:
0.00 [kW]	100000.00 [kW]	0.00 [kW]

Description: Displays the rated motor power.

p0311[0] Rated motor speed

Data type: FloatingPoint32	**Visible in:** Standard display	
Read permission:	Read drive data or acknowledge messages	
Write permission:	Edit device configuration or drive applications	
Can be changed in the operating state:	Commissioning	
Parameter group:	Motor data, Quick commissioning	
Unit: rpm		
Min:	**Max:**	**Factory setting:**
0.0 [rpm]	210000.0 [rpm]	0.0 [rpm]

Description: Displays the rated motor speed.

p0312[0] Rated motor torque

Data type: FloatingPoint32	**Visible in:** Standard display	
Read permission:	Read drive data or acknowledge messages	
Write permission:	Edit device configuration or drive applications	
Can be changed in the operating state:	Commissioning	
Parameter group:	Motor data	
Unit: Nm		
Min:	**Max:**	**Factory setting:**
0.00 [Nm]	1000000.00 [Nm]	0.00 [Nm]

Description: Displays the rated motor torque.

r0316[0] Motor torque constant

Data type: FloatingPoint32	**Visible in:** Extended display
Read permission:	Read drive data or acknowledge messages
Parameter group:	Motor data, Quick commissioning
Unit: Nm/A	

Description: Sets the torque constant of the synchronous motor.
r0316 = 0:
The torque constant is calculated from p0312 or p0307.
r0316 > 0:
The set value is used as torque constant.

p0318[0] Motor stall current

Data type: FloatingPoint32	**Visible in:** Extended display	
Read permission:	Read drive data or acknowledge messages	
Write permission:	Edit device configuration or drive applications	
Can be changed in the operating state:	Commissioning	
Parameter group:	Motor data	
Unit: Arms		
Min:	**Max:**	**Factory setting:**
0.00 [Arms]	10000.00 [Arms]	0.00 [Arms]

Description: Displays the rated motor stall current.

p0319[0] Motor static torque

Data type: FloatingPoint32	**Visible in:** Standard display

Read permission:	Read drive data or acknowledge messages	
Write permission:	Edit device configuration or drive applications	
Can be changed in the operating state:	Commissioning	
Parameter group:	Motor data	
Unit: Nm		
Min:	**Max:**	**Factory setting:**
0.00 [Nm]	100000.00 [Nm]	0.00 [Nm]

Description: Displays the motor standstill/static torque.

p0322[0] Maximum motor speed

Data type: FloatingPoint32	**Visible in:** Extended display	
Read permission:	Read drive data or acknowledge messages	
Write permission:	Edit device configuration or drive applications	
Can be changed in the operating state:	Commissioning	
Parameter group:	Motor data, Quick commissioning	
Unit: rpm		
Min:	**Max:**	**Factory setting:**
0.0 [rpm]	210000.0 [rpm]	0.0 [rpm]

Description: Displays the maximum motor speed.

Dependency: See also: p1082

p0323[0] Maximum motor current

Data type: FloatingPoint32	**Visible in:** Extended display	
Read permission:	Read drive data or acknowledge messages	
Write permission:	Edit device configuration or drive applications	
Can be changed in the operating state:	Commissioning	
Parameter group:	Motor data, Quick commissioning	
Unit: Arms		
Min:	**Max:**	**Factory setting:**
0.00 [Arms]	20000.00 [Arms]	0.00 [Arms]

Description: Displays the maximum permissible motor current.

r0341[0] Motor moment of inertia

Data type: FloatingPoint32	**Visible in:** Extended display
Read permission:	Read drive data or acknowledge messages
Parameter group:	Motor data, Speed controller
Unit: kgm²	

Description: Displays the motor moment of inertia (without load).

p0400[0] Encoder type selection

Data type: Integer16	**Visible in:** Standard display
Read permission:	Read drive data or acknowledge messages
Write permission:	Edit device configuration or drive applications
Can be changed in the operating state:	Commissioning

Parameter group: Encoder evaluation, Quick commissioning

Unit: -

Min:	Max:	Factory setting:
0	10100	0

Description: Selects the encoder from the list of encoder types supported.

Value:

0:	No encoder
801:	Digital encoder interface AS17, singleturn
802:	Digital encoder interface AS21, singleturn
803:	Digital encoder interface AM21, multiturn 4096
9999:	User defined
10100:	Identify encoder (waiting)

NOTICE

An encoder type with p0400 < 9999 defines an encoder for which there is an encoder parameter list.
When selecting a catalog encoder (p0400 < 9999) the parameters from the encoder parameter list cannot be changed (write protection).

Note

The connected encoder can be identified using p0400 = 10100. This means that the encoder must support this.

For p0400 = 10100 the following applies:
The connected encoder is identified. If identification is not possible, then p0400 remains set = 10100, and the system waits until identification is possible.

p0404[0].1...20 Encoder configuration effective

Data type: Unsigned32 **Visible in:** Standard display

Read permission: Read drive data or acknowledge messages

Write permission: Edit device configuration or drive applications

Can be changed in the operating state: Commissioning

Parameter group: Encoder evaluation

Unit: -

Min:	Max:	Factory setting:
-	-	0000 0000 0000 0000 0000 0000 0000 0000 bin

Description: Settings for the basic encoder properties.

Bit array:

Bit	Signal name	1 signal	0 signal
01	Absolute encoder	Yes	No
02	Multiturn encoder	Yes	No
03	Track A/B square-wave	Yes	No
07	Digital Encoder Interface	Yes	No
20	Voltage level 5 V	Yes	No

NOTICE

This parameter is automatically preassigned for encoders from the encoder list and for identify encoder (p0400).
When selecting a catalog encoder, this parameter cannot be changed (write protection).

Note

For bit 01, 02 (absolute encoder, multiturn encoder):
These bits can only be selected for a DEI encoder.

p0405[0].1...6 Square-wave encoder track A/B

Data type: Unsigned32 **Visible in:** Standard display

Read permission:	Read drive data or acknowledge messages	
Write permission:	Edit device configuration or drive applications	
Can be changed in the operating state:	Commissioning	
Parameter group:	Encoder evaluation	
Unit: -		
Min:	**Max:**	**Factory setting:**
-	-	0000 1111 bin

Description: Settings for the track A/B in a square-wave encoder.
For square-wave encoders, p0404.3 must also be 1.

Bit array:

Bit	Signal name	1 signal	0 signal
01	Level	TTL	HTL
02	Track monitoring	A/B <> -A/B	None
05	Pulse/direction	Active	Inactive
06	Clockwise/counterclockwise	Active	Inactive

NOTICE
This parameter is automatically preassigned for encoders from the encoder list and for identify encoder (p0400).
When selecting a catalog encoder, this parameter cannot be changed (write protection).

Note
For bit 05:
When the function is activated, a frequency setpoint and a direction for traveling can be specified via an encoder interface.
For bit 06:
When the function is activated, a clockwise and counterclockwise signal (CW/CCW) for traveling can be specified via an encoder interface.

p0408[0] Rotary encoder pulse number

Data type: Unsigned32	**Visible in:** Standard display	
Read permission:	Read drive data or acknowledge messages	
Write permission:	Edit device configuration or drive applications	
Can be changed in the operating state:	Commissioning	
Parameter group:	Encoder evaluation	
Unit: -		
Min:	**Max:**	**Factory setting:**
0	16777215	1024

Description: Sets the number of pulses for a rotary encoder.
In conjunction with the fine resolution, the pulse number defines the transfer format for position actual values Gn_XIST1 (r0479).

NOTICE
This parameter is automatically preassigned for encoders from the encoder list and for identify encoder (p0400).
When selecting a catalog encoder, this parameter cannot be changed (write protection).

Note
The smallest permissible value is 1 pulse.
This value does not always correspond to the pulse number of the measuring device. For a DEI encoder, a value is entered here that facilitates optimum transfer of the resolution (p0423).

p0410[0].0...1 Encoder/PTI inversion actual value

Data type: Unsigned16	**Visible in:** Standard display
Read permission:	Read drive data or acknowledge messages

Write permission: Edit device configuration or drive applications
Can be changed in the operating state: Commissioning
Parameter group: Encoder evaluation
Unit: -

Min:	Max:	Factory setting:
-	-	0000 bin

Description: Setting to invert actual values.

Bit array:

Bit	Signal name	1 signal	0 signal
00	Invert speed actual value	Yes	No
01	Invert position actual value	Yes	No

Note
The inversion influences the following parameters:
Bit 00: r0061, r0063 (exception: encoderless closed-loop control)
Bit 01: r0479

p0419[0] Fine resolution absolute value Gx_XIST2 (in bits)

Data type: Unsigned8 **Visible in:** Extended display
Read permission: Read drive data or acknowledge messages
Write permission: Edit device configuration or drive applications
Can be changed in the operating state: Commissioning
Parameter group: Encoder evaluation
Unit: -

Min:	Max:	Factory setting:
0	18	9

Description: Sets the fine resolution in bits of the absolute position actual values.

Note
This parameter applies to process data Gx_XIST2 when reading the absolute value.

p0421[0] Absolute encoder rotary multiturn resolution

Data type: Unsigned32 **Visible in:** Standard display
Read permission: Read drive data or acknowledge messages
Write permission: Edit device configuration or drive applications
Can be changed in the operating state: Commissioning
Parameter group: Encoder evaluation
Unit: -

Min:	Max:	Factory setting:
0	4294967295	4096

Description: Sets the number of revolutions that can be resolved for a rotary absolute encoder.

NOTICE
This parameter is automatically preassigned for encoders from the encoder list and for identify encoder (p0400).
When selecting a catalog encoder, this parameter cannot be changed (write protection).

p0423[0] Absolute encoder rotary singleturn resolution

Data type: Unsigned32 **Visible in:** Standard display
Read permission: Read drive data or acknowledge messages
Write permission: Edit device configuration or drive applications

Can be changed in the operating state:	Commissioning	
Parameter group:	Encoder evaluation	
Unit: -		
Min:	**Max:**	**Factory setting:**
0	1073741823	8192

Description: Sets the number of measuring steps per revolution for a rotary absolute encoder.
The resolution refers to the absolute position.

NOTICE
This parameter is automatically preset for encoders from the encoder list and for "Encoder type selection" (p0400). When selecting a catalog encoder, this parameter cannot be changed (write protection).

p0438[0] PTI evaluation filter time

Data type: FloatingPoint32	**Visible in:** Extended display	
Read permission:	Read drive data or acknowledge messages	
Write permission:	Edit device configuration or drive applications	
Can be changed in the operating state:	Commissioning	
Parameter group:	Encoder evaluation	
Unit: µs		
Min:	**Max:**	**Factory setting:**
0.00 [µs]	100.00 [µs]	0.64 [µs]

Description: Sets the filter time for a square-wave encoder.

NOTICE
If the filter time is too long, the PTI signals A/B may be suppressed.

r0479[0...2] Diagnostics encoder position actual value Gn_XIST1

Data type: Integer32	**Visible in:** Standard display
Read permission:	Read drive data or acknowledge messages
Parameter group:	Encoder evaluation
Unit: -	

Description: Display for the encoder position actual value Gn_XIST1 according to PROFIdrive for diagnostics.
The value is displayed with sign.

Index: [0] = Motor encoder
[1] = PTI
[2] = Reserved

p0488[0...2] Measuring probe 1 input terminal

Variant:	S200 PTI	
Data type: Integer16	**Visible in:** Standard display	
Read permission:	Read drive data or acknowledge messages	
Write permission:	Edit device configuration or drive applications	
Can be changed in the operating state:	Operation	
Parameter group:	Measuring probe, Traversing blocks	
Unit: -		
Min:	**Max:**	**Factory setting:**
0	210	0

Description: Sets the input terminal to connect probe 1.

Value:
0: No measuring probe
210: DI 0 (X132.5)

Index:
[0] = Motor encoder
[1] = Reserved
[2] = Reserved

Dependency: See also: p0489, p0490

⚠ CAUTION
In order to prevent incorrect measurement values, these parameters may not be written during an active measurement.

Note
DI: Digital Input

p0489[0...2] Measuring probe 2 input terminal

Variant: S200 PTI
Data type: Integer16 **Visible in:** Standard display
Read permission: Read drive data or acknowledge messages
Write permission: Edit device configuration or drive applications
Can be changed in the operating state: Operation
Parameter group: Measuring probe, Traversing blocks
Unit: -

Min:	Max:	Factory setting:
0	211	0

Description: Sets the input terminal to connect probe 2.

Value:
0: No measuring probe
211: DI 1 (X132.6)

Index:
[0] = Motor encoder
[1] = Reserved
[2] = Reserved

Dependency: See also: p0488, p0490

⚠ CAUTION
In order to prevent incorrect measurement values, these parameters may not be written during an active measurement.

Note
DI: Digital Input

p0490.0...1 Invert measuring probe or equivalent zero mark

Variant: S200 PTI
Data type: Unsigned32 **Visible in:** Standard display
Read permission: Read drive data or acknowledge messages
Write permission: Edit device configuration or drive applications
Can be changed in the operating state: Operation
Parameter group: Measuring probe
Unit: -

Min:	Max:	Factory setting:
-	-	0000 bin

Description: Setting to invert the digital input signals to connect a measuring probe or an equivalent zero mark.

Bit array:

Bit	Signal name	1 signal	0 signal
00	DI 0 (X132.5)	Inverted	Not inverted

01	DI 1 (X132.6)	Inverted	Not inverted

Dependency: See also: p0488, p0489, p0494

Note
The terminal must be set as input.
When the measuring probe or the equivalent zero mark is inverted, this has no effect on the status displays of the digital inputs (r0721, r0722).
DI: Digital Input

p0494[0] Equivalent zero mark input terminal

Variant: S200 PTI

Data type: Integer16 **Visible in:** Standard display

Read permission: Read drive data or acknowledge messages

Write permission: Edit device configuration or drive applications

Can be changed in the operating state: Operation

Parameter group: Encoder evaluation, Homing

Unit: -

Min:	Max:	Factory setting:
0	211	0

Description: Selects the input terminal for connecting an equivalent zero mark (external encoder zero mark).

Value:
0: No equivalent zero mark (evaluation of the encoder zero mark)
210: DI 0 (X132.5)
211: DI 1 (X132.6)

Dependency: See also: p0490

⚠ CAUTION
In order to prevent incorrect measurement values, these parameters may not be written during an active measurement.

p0550[0] Brake version

Data type: Integer16 **Visible in:** Extended display

Read permission: Read drive data or acknowledge messages

Write permission: Edit device configuration or drive applications

Can be changed in the operating state: Commissioning

Parameter group: Motor holding brake, Quick commissioning

Unit: -

Min:	Max:	Factory setting:
0	2	0

Description: Sets the brake version.

Value:
0: No data
1: Holding brake
2: High performance holding brake

NOTICE
After entering a corresponding code number (p0551), this parameter is automatically pre-assigned and write protected. The information in p0551 should be observed when removing write protection.

Note
For p0550 = 1:
The default value for opening time/closing time applies.
For p0550 = 2:
A shorter opening time/closing time is realized if the power unit supports the function.

p0551[0] Brake code number

Data type: Unsigned32	**Visible in:** Extended display	
Read permission:	Read drive data or acknowledge messages	
Write permission:	Edit device configuration or drive applications	
Can be changed in the operating state:	Commissioning	
Parameter group:	Motor holding brake, Quick commissioning	
Unit: -		
Min:	**Max:**	**Factory setting:**
0	4294967295	1

Description:

Setting the code number for the brake.
0 = No data
1 = Manual entry
> 1 = valid code number
For value = 0:
- Parameters listed under Dependent are set to a value of zero and are write protected.
- Parameters p1216, p1217 are set to a value of zero.
For value = 1:
- Write protection for the parameters listed under Dependent is withdrawn.
For value > 1:
- Parameters listed under Dependent are automatically pre-assigned and are write protected.
- Parameters p1216, p1217 are automatically appropriately pre-assigned.

Dependency:

See also: p0550

Note
Only code numbers can be set that are permitted for the selected motor code (p0301).

p0613[0] Motor temperature model ambient temperature

Data type: FloatingPoint32	**Visible in:** Extended display	
Read permission:	Read drive data or acknowledge messages	
Write permission:	Edit device configuration or drive applications	
Can be changed in the operating state:	Operation	
Parameter group:	Motor temperature	
Unit: °C		
Min:	**Max:**	**Factory setting:**
-40 [°C]	100 [°C]	20 [°C]

Description:

Sets the motor ambient temperature.
Based on this value, the motor temperature model calculates the thermal motor utilization (r0034).

Dependency:

See also: r0034
See also: F07011, A07012

Note
If the thermal motor model is activated for permanent-magnet synchronous motors, then the parameter is incorporated in the model calculation if a temperature sensor is not being used.
For thermal motor model 1, the factory setting is based on an ambient temperature of 40 °C.

r0721.2...7 CU digital inputs terminal actual value

Variant:	S200 Basic PTI
Data type: Unsigned32	**Visible in:** Standard display
Read permission:	Read drive data or acknowledge messages

Parameter group: Digital inputs

Unit: -

Description: Displays the actual value at the digital inputs.

This means that the actual input signal can be checked at terminal DI x prior to switching from the simulation mode (p0795.x = 1) to the terminal mode (p0795.x = 0).

Bit array:

Bit	Signal name	1 signal	0 signal
02	DI 2 (X132.7)	High	Low
03	DI 3 (X132.8)	High	Low
04	DI 4 (X132.9)	High	Low
05	DI 5 (X132.10)	High	Low
06	DI 6 (X132.11)	High	Low
07	DI 7 (X132.12)	High	Low

Note
DI: Digital Input

r0721.0...9 CU digital inputs terminal actual value

Variant: S200 PTI

Data type: Unsigned32 **Visible in:** Standard display

Read permission: Read drive data or acknowledge messages

Parameter group: Digital inputs

Unit: -

Description: Displays the actual value at the digital inputs.

This means that the actual input signal can be checked at terminal DI x prior to switching from the simulation mode (p0795.x = 1) to the terminal mode (p0795.x = 0).

Bit array:

Bit	Signal name	1 signal	0 signal
00	DI 0 (X132.5)	High	Low
01	DI 1 (X132.5)	High	Low
02	DI 2 (X132.7)	High	Low
03	DI 3 (X132.8)	High	Low
04	DI 4 (X132.9)	High	Low
05	DI 5 (X132.10)	High	Low
06	DI 6 (X132.11)	High	Low
07	DI 7 (X132.12)	High	Low
08	DI 8 (X132.13)	High	Low
09	DI 9 (X132.14)	High	Low

Note
DI: Digital Input

r0722.2...7 Digital inputs status

Variant: S200 Basic PTI

Data type: Unsigned32 **Visible in:** Standard display

Read permission: Read drive data or acknowledge messages

Parameter group: Digital inputs

Unit: -

Description: Displays for the status of the digital inputs.

Bit array:

Bit	Signal name	1 signal	0 signal
02	DI 2 (X132.7)	High	Low
03	DI 3 (X132.8)	High	Low
04	DI 4 (X132.9)	High	Low

05	DI 5 (X132.10)	High	Low
06	DI 6 (X132.11)	High	Low
07	DI 7 (X132.12)	High	Low

Dependency: See also: p0488, p0489

Note
DI: Digital Input

r0722.0...9 Digital inputs status

Variant: S200 PTI
Data type: Unsigned32 **Visible in:** Standard display
Read permission: Read drive data or acknowledge messages
Parameter group: Digital inputs
Unit: -

Description: Displays for the status of the digital inputs.

Bit array:

Bit	Signal name	1 signal	0 signal
00	DI 0 (X132.5)	High	Low
01	DI 1 (X132.6)	High	Low
02	DI 2 (X132.7)	High	Low
03	DI 3 (X132.8)	High	Low
04	DI 4 (X132.9)	High	Low
05	DI 5 (X132.10)	High	Low
06	DI 6 (X132.11)	High	Low
07	DI 7 (X132.12)	High	Low
08	DI 8 (X132.13)	High	Low
09	DI 9 (X132.14)	High	Low

Dependency: See also: p0488, p0489

Note
For bits 00, 01: DI 0 and DI 1 are fast digital inputs and can be used as measuring probe (p0488, p0489).
DI: Digital Input

c0730 Signal for terminal DO 0

Variant: S200 PTI
Data type: Unsigned8 **Visible in:** Standard display
Read permission: Read drive data or acknowledge messages
Write permission: Edit device configuration or drive applications
Parameter group: Digital outputs
Unit: -

Description: Signal for terminal DO 0 (X132.30).

Note
DO: Digital Output

c0731 Signal for terminal DO 1

Variant: S200 PTI
Data type: Unsigned8 **Visible in:** Standard display
Read permission: Read drive data or acknowledge messages
Write permission: Edit device configuration or drive applications
Parameter group: Digital outputs
Unit: -

Description: Signal for terminal DO 1 (X132.31).

Note
DO: Digital Output

c0732 Signal for terminal DO 2

Data type: Unsigned8 **Visible in:** Standard display
Read permission: Read drive data or acknowledge messages
Write permission: Edit device configuration or drive applications
Parameter group: Digital outputs
Unit: -

Description: Signal for terminal DO 2 (X132.32).

Note
DO: Digital Output

c0733 CU signal for terminal DO 3

Data type: Unsigned8 **Visible in:** Standard display
Read permission: Read drive data or acknowledge messages
Write permission: Edit device configuration or drive applications
Parameter group: Digital outputs
Unit: -

Description: Signal for terminal DO3 (DO+: X132.29 / DO-: X132.33).

Note
DO: Digital Output

c0734 CU signal for terminal DO 4

Data type: Unsigned8 **Visible in:** Standard display
Read permission: Read drive data or acknowledge messages
Write permission: Edit device configuration or drive applications
Parameter group: Digital outputs
Unit: -

Description: Signal for terminal DO 4 (DO+: X132.34 / DO-: X132.44).

Note
DO: Digital Output

c0735 CU signal for terminal DO 5

Data type: Unsigned8 **Visible in:** Standard display
Read permission: Read drive data or acknowledge messages
Write permission: Edit device configuration or drive applications
Parameter group: Digital outputs
Unit: -

Description: Signal for terminal DO 5 (DO+: X132.35 / DO-: X132.49).

Note
DO: Digital Output

r0747.2...5 Digital outputs status

Variant: S200 Basic PTI
Data type: Unsigned32 **Visible in:** Standard display

Read permission: Read drive data or acknowledge messages
Parameter group: Digital outputs
Unit: -

Description: Displays the status of digital outputs.

Bit array:

Bit	Signal name	1 signal	0 signal
02	DO 2 (X132.32)	High	Low
03	DO 3 (DO+: X132.29 / DO-: X132.33)	High	Low
04	DO 4 (DO+: X132.34 / DO-: X132.44)	High	Low
05	DO 5 (DO+: X132.35 / DO-: X132.49)	High	Low

Note
DO: Digital Output

r0747.0...5 Digital outputs status

Variant: S200 PTI
Data type: Unsigned32 **Visible in:** Standard display
Read permission: Read drive data or acknowledge messages
Parameter group: Digital outputs
Unit: -

Description: Displays the status of digital outputs.

Bit array:

Bit	Signal name	1 signal	0 signal
00	DO 0 (X132.30)	High	Low
01	DO 1 (X132.31)	High	Low
02	DO 2 (X132.32)	High	Low
03	DO 3 (DO+: X132.29 / DO-: X132.33)	High	Low
04	DO 4 (DO+: X132.34 / DO-: X132.44)	High	Low
05	DO 5 (DO+: X132.35 / DO-: X132.49)	High	Low

Note
DO: Digital Output

p0748.2...5 Invert digital outputs

Variant: S200 Basic PTI
Data type: Unsigned32 **Visible in:** Standard display
Read permission: Read drive data or acknowledge messages
Write permission: Edit device configuration or drive applications
Can be changed in the operating state: Operation
Parameter group: Digital outputs
Unit: -

Min:	Max:	Factory setting:
-	-	0000 0000 bin

Description: Setting to invert the signals at the digital outputs.

Bit array:

Bit	Signal name	1 signal	0 signal
02	DO 2 (X132.32)	Inverted	Not inverted
03	DO 3 (DO+: X132.29 / DO-: X132.33)	Inverted	Not inverted
04	DO 4 (DO+: X132.34 / DO-: X132.44)	Inverted	Not inverted
05	DO 5 (DO+: X132.35 / DO-: X132.49)	Inverted	Not inverted

Note
DO: Digital Output

p0748.0...5 Invert digital outputs

Variant: S200 PTI
Data type: Unsigned32 **Visible in:** Standard display
Read permission: Read drive data or acknowledge messages
Write permission: Edit device configuration or drive applications
Can be changed in the operating state: Operation
Parameter group: Digital outputs
Unit: -

Min:	Max:	Factory setting:
-	-	0000 0000 bin

Description: Setting to invert the signals at the digital outputs.

Bit array:

Bit	Signal name	1 signal	0 signal
00	DO 0 (X132.30)	Inverted	Not inverted
01	DO 1 (X132.31)	Inverted	Not inverted
02	DO 2 (X132.32)	Inverted	Not inverted
03	DO 3 (DO+: X132.29 / DO-: X132.33)	Inverted	Not inverted
04	DO 4 (DO+: X132.34 / DO-: X132.44)	Inverted	Not inverted
05	DO 5 (DO+: X132.35 / DO-: X132.49)	Inverted	Not inverted

Note
DO: Digital Output

r0751.0...9 Analog inputs status word

Variant: S200 PTI
Data type: Unsigned16 **Visible in:** Standard display
Read permission: Read drive data or acknowledge messages
Parameter group: Analog inputs
Unit: -

Description: Displays for the status of the analog inputs.

Bit array:

Bit	Signal name	1 signal	0 signal
00	Analog input AI 0 wire breakage	Yes	No
01	Analog input AI 1 wire breakage	Yes	No
08	Analog input AI 0 No wire breakage	Yes	No
09	Analog input AI 1 No wire breakage	Yes	No

Note
AI: Analog Input

r0752[0...1] Analog inputs actual input voltage/current

Variant: S200 PTI
Data type: FloatingPoint32 **Visible in:** Standard display
Read permission: Read drive data or acknowledge messages
Parameter group: Analog inputs
Unit: -

Description: Displays the actual input voltage in V when set as voltage input.
Displays the actual input current in mA when set as current input and with the load resistor switched in.

Index: [0] = AI 0 (X132.19/20)
[1] = AI1 (X132.21/22)

Dependency: The type of analog input AIx (voltage or current input) is set using p0756.
See also: p0756

Note
AI: Analog Input

p0753[0...1] Analog inputs smoothing time constant

Variant:	S200 PTI	
Data type: FloatingPoint32	**Visible in:** Standard display	
Read permission:	Read drive data or acknowledge messages	
Write permission:	Edit device configuration or drive applications	
Can be changed in the operating state:	Operation	
Parameter group:	Analog inputs	
Unit: ms		
Min:	**Max:**	**Factory setting:**
0.0 [ms]	1000.0 [ms]	0.0 [ms]

Description: Sets the smoothing time constant of the 1st order lowpass filter for the analog inputs.

Index: [0] = AI 0 (X132.19/20)
[1] = AI 1 (X132.21/22)

Note
AI: Analog Input

r0755[0...1] Analog inputs, actual value in percent

Variant:	S200 PTI
Data type: FloatingPoint32	**Visible in:** Standard display
Read permission:	Read drive data or acknowledge messages
Parameter group:	Analog inputs
Unit: %	

Description: Displays the currently referred input value of the analog inputs.
When interconnected, the signals are referred to the reference quantities p200x and p205x.

Index: [0] = AI 0 (X132.19/20)
[1] = AI 1 (X132.21/22)

Note
AI: Analog Input

p0756[0...1] Analog inputs type

Variant:	S200 PTI	
Data type: Integer16	**Visible in:** Standard display	
Read permission:	Read drive data or acknowledge messages	
Write permission:	Edit device configuration or drive applications	
Can be changed in the operating state:	Operation	
Parameter group:	Analog inputs	
Unit: -		
Min:	**Max:**	**Factory setting:**
0	4	[0] 4
		[1] 4

Description: Sets the type of analog inputs.
p0756[0...1] = 0, 1, 4 corresponds to a voltage input (r0752, p0757, p0759 are displayed in V).

Value:
0: Unipolar voltage input (0 V ... +10 V)
1: Unipolar voltage input monitored (+2 V ... +10 V)
4: Bipolar voltage input (-10 V ... +10 V)

Index:
[0] = AI 0 (X132.19/20)
[1] = AI 1 (X132.21/22)

⚠ WARNING
The maximum voltage difference between analog input terminals AI+, AI-, and the ground must not exceed 35 V.

Note
When changing p0756, the parameters of the scaling characteristic (p0757, p0758, p0759, p0760) are overwritten with the following default values:
For p0756 = 0, 4, p0757 is set to 0.0 V, p0758 = 0.0 %, p0759 = 10.0 V and p0760 = 100.0 %.

p0757[0...1] Analog inputs characteristic value x1

Variant: S200 PTI
Data type: FloatingPoint32 **Visible in:** Standard display
Read permission: Read drive data or acknowledge messages
Write permission: Edit device configuration or drive applications
Can be changed in the operating state: Operation
Parameter group: Analog inputs
Unit: -

Min:	Max:	Factory setting:
-50.000	160.000	0.000

Description:
Sets the scaling characteristic for the analog inputs.
The scaling characteristic for the analog inputs is defined using 2 points.
This parameter specifies the x coordinate (input voltage in V) of the 1st value pair of the characteristic.

Index:
[0] = AI 0 (X132.19/20)
[1] = AI 1 (X132.21/22)

Note
The parameters for the characteristic do not have a limiting effect.

p0758[0...1] Analog inputs characteristic value y1

Variant: S200 PTI
Data type: FloatingPoint32 **Visible in:** Standard display
Read permission: Read drive data or acknowledge messages
Write permission: Edit device configuration or drive applications
Can be changed in the operating state: Operation
Parameter group: Analog inputs
Unit: %

Min:	Max:	Factory setting:
-1000.00 [%]	1000.00 [%]	0.00 [%]

Description:
Sets the scaling characteristic for the analog inputs.
The scaling characteristic for the analog inputs is defined using 2 points.
This parameter specifies the y coordinate (percentage) of the 1st value pair of the characteristic.

Index:
[0] = AI 0 (X132.19/20)
[1] = AI 1 (X132.21/22)

Note
The parameters for the characteristic do not have a limiting effect.

p0759[0...1] Analog inputs characteristic value x2

Variant:	S200 PTI	
Data type: FloatingPoint32	**Visible in:** Standard display	
Read permission:	Read drive data or acknowledge messages	
Write permission:	Edit device configuration or drive applications	
Can be changed in the operating state:	Operation	
Parameter group:	Analog inputs	
Unit: -		
Min:	**Max:**	**Factory setting:**
-50.000	160.000	10.000

Description:
Sets the scaling characteristic for the analog inputs.
The scaling characteristic for the analog inputs is defined using 2 points.
This parameter specifies the x coordinate (input voltage in V) of the 2nd value pair of the characteristic.

Index:
[0] = AI 0 (X132.19/20)
[1] = AI 1 (X132.21/22)

Note
The parameters for the characteristic do not have a limiting effect.

p0760[0...1] Analog inputs characteristic value y2

Variant:	S200 PTI	
Data type: FloatingPoint32	**Visible in:** Standard display	
Read permission:	Read drive data or acknowledge messages	
Write permission:	Edit device configuration or drive applications	
Can be changed in the operating state:	Operation	
Parameter group:	Analog inputs	
Unit: %		
Min:	**Max:**	**Factory setting:**
-1000.00 [%]	1000.00 [%]	100.00 [%]

Description:
Sets the scaling characteristic for the analog inputs.
The scaling characteristic for the analog inputs is defined using 2 points.
This parameter specifies the y coordinate (percentage) of the 2nd value pair of the characteristic.

Index:
[0] = AI 0 (X132.19/20)
[1] = AI 1 (X132.21/22)

Note
The parameters for the characteristic do not have a limiting effect.

p0761[0...1] Analog inputs wire break monitoring, response threshold

Variant:	S200 PTI	
Data type: FloatingPoint32	**Visible in:** Standard display	
Read permission:	Read drive data or acknowledge messages	
Write permission:	Edit device configuration or drive applications	
Can be changed in the operating state:	Operation	
Parameter group:	Analog inputs	
Unit: -		
Min:	**Max:**	**Factory setting:**
0.00	10.00	2.00

Description: Sets the response threshold for the wire breakage monitoring of the analog inputs.

Index: [0] = AI 0 (X132.19/20)
[1] = AI 1 (X132.21/22)

Dependency: For the following analog input type, the wire breakage monitoring is active:
p0756[0...1] = 1 (monitored unipolar voltage input (+2 V ... +10 V)), unit [V].
See also: p0756

Note
AI: Analog Input

p0762[0...1] Analog inputs wire-break monitoring delay time

Variant:	S200 PTI	
Data type: Unsigned16	**Visible in:** Standard display	
Read permission:	Read drive data or acknowledge messages	
Write permission:	Edit device configuration or drive applications	
Can be changed in the operating state:	Operation	
Parameter group:	Analog inputs	
Unit: ms		
Min:	**Max:**	**Factory setting:**
0 [ms]	1000 [ms]	100 [ms]

Description: Sets the delay time for the wire breakage monitoring of the analog inputs.

Index: [0] = AI 0 (X132.19/20)
[1] = AI 1 (X132.21/22)

Note
AI: Analog Input

p0763[0...1] Analog inputs offset

Variant:	S200 PTI	
Data type: FloatingPoint32	**Visible in:** Standard display	
Read permission:	Read drive data or acknowledge messages	
Write permission:	Edit device configuration or drive applications	
Can be changed in the operating state:	Operation	
Parameter group:	Analog inputs	
Unit: -		
Min:	**Max:**	**Factory setting:**
-20.000	20.000	0.000

Description: Sets the offset for the analog inputs.
The offset is added to the input signal before the scaling characteristic.

Index: [0] = AI 0 (X132.19/20)
[1] = AI 1 (X132.21/22)

Note
AI: Analog Input

p0764[0...1] Analog inputs deadband

Variant:	S200 PTI
Data type: FloatingPoint32	**Visible in:** Standard display
Read permission:	Read drive data or acknowledge messages
Write permission:	Edit device configuration or drive applications

Can be changed in the operating state:	Operation	
Parameter group:	Analog inputs	
Unit: -		
Min:	**Max:**	**Factory setting:**
0.000	20.000	0.000

Description: Sets the width of the deadband at the analog input.

Analog input type unipolar (e.g. 0 ... +10 V):

The dead zone starts with the characteristic value x1/y1 (p0757/p0758).

Analog input type bipolar (e.g. -10 V ... +10 V):

The dead zone is located at the symmetrical center between characteristic value x1/y1 (p0757/p0758) and x2/y2 (p0759/p0760). The set value doubles the deadband.

Index: [0] = AI 0 (X132.19/20)
[1] = AI 1 (X132.21/22)

Note
AI: Analog Input

p0766[0...1] Analog inputs activate absolute value generation

Variant:	S200 PTI	
Data type: Integer16	**Visible in:** Standard display	
Read permission:	Read drive data or acknowledge messages	
Write permission:	Edit device configuration or drive applications	
Can be changed in the operating state:	Operation	
Parameter group:	Analog inputs	
Unit: -		
Min:	**Max:**	**Factory setting:**
0	1	0

Description: Activates the absolute value generation of the analog input signals.

Value:
0: No absolute value generation
1: Absolute value generation switched in

Index: [0] = AI 0 (X132.19/20)
[1] = AI 1 (X132.21/22)

Note
AI: Analog Input

c0767[0...1] Analog inputs inversion

Variant:	S200 PTI
Data type: Unsigned8	**Visible in:** Standard display
Read permission:	Read drive data or acknowledge messages
Write permission:	Edit device configuration or drive applications
Parameter group:	Analog inputs
Unit: -	

Description: Signal to invert the analog input signals.

Index: [0] = AI 0 (X132.19/20)
[1] = AI 1 (X132.21/22)

Note
AI: Analog Input

p0768[0...1] Analog inputs noise suppression window

Variant: S200 PTI
Data type: FloatingPoint32 **Visible in:** Standard display
Read permission: Read drive data or acknowledge messages
Write permission: Edit device configuration or drive applications
Can be changed in the operating state: Operation
Parameter group: Analog inputs
Unit: %

Min:	Max:	Factory setting:
0.00 [%]	20.00 [%]	0.00 [%]

Description: Sets the window for noise suppression of the analog inputs.
Changes less than the window are suppressed.

Index: [0] = AI 0 (X132.19/20)
[1] = AI 1 (X132.21/22)

Note
AI: Analog Input

c0769[0...1] Analog inputs enable

Variant: S200 PTI
Data type: Unsigned8 **Visible in:** Standard display
Read permission: Read drive data or acknowledge messages
Write permission: Edit device configuration or drive applications
Parameter group: Analog inputs
Unit: -

Description: Signal to enable the analog inputs.

Index: [0] = AI 0 (X132.19/20)
[1] = AI 1 (X132.21/22)

Note
AI: Analog Input

c0771[0...1] CU analog outputs signal

Variant: S200 PTI
Data type: FloatingPoint32 **Visible in:** Standard display
Read permission: Read drive data or acknowledge messages
Write permission: Edit device configuration or drive applications
Parameter group: Analog outputs
Unit: %

Description: Signal for the analog outputs.

Index: [0] = AO 0 (X132.45/46)
[1] = AO 1 (X132.47/48)

Note
AO: Analog Output

r0772[0...1] CU analog outputs output value currently referred

Variant: S200 PTI
Data type: FloatingPoint32 **Visible in:** Standard display
Read permission: Read drive data or acknowledge messages

Parameter group: Analog outputs
Unit: %

Description: Displays the actual referred output value of the analog outputs.

Index: [0] = AO 0 (X132.45/46)
[1] = AO 1 (X132.47/48)

Note
AO: Analog Output

p0773[0...1] CU analog outputs smoothing time constant

Variant: S200 PTI
Data type: FloatingPoint32 **Visible in:** Standard display
Read permission: Read drive data or acknowledge messages
Write permission: Edit device configuration or drive applications
Can be changed in the operating state: Operation
Parameter group: Analog outputs
Unit: ms

Min:	Max:	Factory setting:
0.0 [ms]	1000.0 [ms]	0.0 [ms]

Description: Sets the smoothing time constant of the 1st order lowpass filter for the analog outputs.

Index: [0] = AO 0 (X132.45/46)
[1] = AO 1 (X132.47/48)

Note
AO: Analog Output

r0774[0...1] CU analog outputs output voltage/current actual

Variant: S200 PTI
Data type: FloatingPoint32 **Visible in:** Standard display
Read permission: Read drive data or acknowledge messages
Parameter group: Analog outputs
Unit: V

Description: Displays the actual output voltage at the analog outputs.

Index: [0] = AO 0 (X132.45/46)
[1] = AO 1 (X132.47/48)

Dependency: See also: p0776

Note
AO: Analog Output

p0775[0...1] CU analog outputs activate absolute value generation

Variant: S200 PTI
Data type: Integer16 **Visible in:** Standard display
Read permission: Read drive data or acknowledge messages
Write permission: Edit device configuration or drive applications
Can be changed in the operating state: Ready for operation
Parameter group: Analog outputs
Unit: -

Min:	Max:	Factory setting:
0	1	0

Description: Activates the absolute value generation for the analog outputs.

Value:
0: No absolute value generation
1: Absolute value generation switched in

Index:
[0] = AO 0 (X132.45/46)
[1] = AO 1 (X132.47/48)

Note
AO: Analog Output

p0776[0...1] CU analog outputs type

Variant:	S200 PTI	
Data type: Integer16	**Visible in:** Standard display	
Read permission:	Read drive data or acknowledge messages	
Write permission:	Edit device configuration or drive applications	
Can be changed in the operating state:	Operation	
Parameter group:	Analog outputs	
Unit: -		
Min:	**Max:**	**Factory setting:**
1	4	1

Description: Sets the analog output type.
p0776[x] = 1, 4 corresponds to a voltage output.

Value:
1: Voltage output (0 V ... +10 V)
4: Voltage output (-10 V ... +10 V)

Index:
[0] = AO 0 (X132.45/46)
[1] = AO 1 (X132.47/48)

Note
When changing p0776, the parameters of the scaling characteristic (p0777, p0778, p0779, p0780) are overwritten with the following default values:
For p0776 = 1 and 4, p0777 is set to 0.0 %, p0778 = 0.0 V, p0779 = 100.0 % and p0780 to 10.0 V.
AO: Analog Output

p0777[0...1] CU analog outputs characteristic value x1

Variant:	S200 PTI	
Data type: FloatingPoint32	**Visible in:** Standard display	
Read permission:	Read drive data or acknowledge messages	
Write permission:	Edit device configuration or drive applications	
Can be changed in the operating state:	Operation	
Parameter group:	Analog outputs	
Unit: %		
Min:	**Max:**	**Factory setting:**
-1000.00 [%]	1000.00 [%]	0.00 [%]

Description: Sets the scaling characteristic for the analog outputs.
The scaling characteristic for the analog outputs is defined using 2 points.
This parameter specifies the x coordinate (percentage) of the 1st value pair of the characteristic.

Index:
[0] = AO 0 (X132.45/46)
[1] = AO 1 (X132.47/48)

Dependency: See also: p0776

NOTICE
This parameter is automatically overwritten when changing p0776 (type of analog outputs).

Note
The parameters for the characteristic do not have a limiting effect.

p0778[0...1] CU analog outputs characteristic value y1

Variant:	S200 PTI	
Data type: FloatingPoint32	**Visible in:** Standard display	
Read permission:	Read drive data or acknowledge messages	
Write permission:	Edit device configuration or drive applications	
Can be changed in the operating state:	Operation	
Parameter group:	Analog outputs	
Unit: V		
Min:	**Max:**	**Factory setting:**
0.000 [V]	10.000 [V]	0.000 [V]

Description: Sets the scaling characteristic for the analog outputs.
The scaling characteristic for the analog outputs is defined using 2 points.
This parameter specifies the y coordinate (output voltage in V) of the 1st value pair of the characteristic.

Index: [0] = AO 0 (X132.45/46)
[1] = AO 1 (X132.47/48)

Dependency: See also: p0776

NOTICE
This parameter is automatically overwritten when changing p0776 (type of analog outputs).

Note
The parameters for the characteristic do not have a limiting effect.

p0779[0...1] CU analog outputs characteristic value x2

Variant:	S200 PTI	
Data type: FloatingPoint32	**Visible in:** Standard display	
Read permission:	Read drive data or acknowledge messages	
Write permission:	Edit device configuration or drive applications	
Can be changed in the operating state:	Operation	
Parameter group:	Analog outputs	
Unit: %		
Min:	**Max:**	**Factory setting:**
-1000.00 [%]	1000.00 [%]	100.00 [%]

Description: Sets the scaling characteristic for the analog outputs.
The scaling characteristic for the analog outputs is defined using 2 points.
This parameter specifies the x coordinate (percentage) of the 2nd value pair of the characteristic.

Index: [0] = AO 0 (X132.45/46)
[1] = AO 1 (X132.47/48)

Dependency: See also: p0776

NOTICE
This parameter is automatically overwritten when changing p0776 (type of analog outputs).

Note
The parameters for the characteristic do not have a limiting effect.

p0780[0...1] CU analog outputs characteristic value y2

Variant:	S200 PTI	
Data type: FloatingPoint32	**Visible in:** Standard display	
Read permission:	Read drive data or acknowledge messages	
Write permission:	Edit device configuration or drive applications	
Can be changed in the operating state:	Operation	
Parameter group:	Analog outputs	
Unit: V		
Min:	**Max:**	**Factory setting:**
0.000 [V]	10.000 [V]	10.000 [V]

Description: Sets the scaling characteristic for the analog outputs.
The scaling characteristic for the analog outputs is defined using 2 points.
This parameter specifies the y coordinate (output voltage in V) of the 2nd value pair of the characteristic.

Index: [0] = AO 0 (X132.45/46)
[1] = AO 1 (X132.47/48)

Dependency: See also: p0776

NOTICE
This parameter is automatically overwritten when changing p0776 (type of analog outputs).

Note
The parameters for the characteristic do not have a limiting effect.

c0782[0...1] CU analog outputs inversion

Variant:	S200 PTI
Data type: Unsigned8	**Visible in:** Standard display
Read permission:	Read drive data or acknowledge messages
Write permission:	Edit device configuration or drive applications
Parameter group:	Analog outputs
Unit: -	

Description: Signal to invert the analog output signals.

Index: [0] = AO 0 (X132.45/46)
[1] = AO 1 (X132.47/48)

Note
AO: Analog Output

p0783[0...1] CU analog outputs offset

Variant:	S200 PTI	
Data type: FloatingPoint32	**Visible in:** Standard display	
Read permission:	Read drive data or acknowledge messages	
Write permission:	Edit device configuration or drive applications	
Can be changed in the operating state:	Operation	
Parameter group:	Analog outputs	
Unit: V		
Min:	**Max:**	**Factory setting:**
-10.000 [V]	10.000 [V]	0.000 [V]

Description: Sets the offset for the analog outputs.
The offset is added to the output signal after the scaling characteristic.

Index: [0] = AO 0 (X132.45/46)
[1] = AO 1 (X132.47/48)

Dependency: See also: p0776

Note
This means, for example, the offset of a downstream isolating amplifier can be compensated.

p0795.2...7 Digital inputs simulation mode

Variant: S200 Basic PTI
Data type: Unsigned32 **Visible in:** Standard display
Read permission: Read drive data or acknowledge messages
Write permission: Edit device configuration or drive applications
Can be changed in the operating state: Operation
Parameter group: Digital inputs
Unit: -

Min:	Max:	Factory setting:
-	-	0000 0000 bin

Description: Sets the simulation mode for digital inputs.

Bit array:

Bit	Signal name	1 signal	0 signal
02	DI 2 (X132.7)	Simulation	Terminal eval
03	DI 3 (X132.8)	Simulation	Terminal eval
04	DI 4 (X132.9)	Simulation	Terminal eval
05	DI 5 (X132.10)	Simulation	Terminal eval
06	DI 6 (X132.11)	Simulation	Terminal eval
07	DI 7 (X132.12)	Simulation	Terminal eval

Dependency: The setpoint for the input signals is specified using p0796.
See also: p0796

Note
This parameter is not saved when backing up data (p0977).
DI: Digital Input

p0795.0...9 Digital inputs simulation mode

Variant: S200 PTI
Data type: Unsigned32 **Visible in:** Standard display
Read permission: Read drive data or acknowledge messages
Write permission: Edit device configuration or drive applications
Can be changed in the operating state: Operation
Parameter group: Digital inputs
Unit: -

Min:	Max:	Factory setting:
-	-	0000 0000 0000 0000 bin

Description: Sets the simulation mode for digital inputs.

Bit array:

Bit	Signal name	1 signal	0 signal
00	DI 0 (X132.5)	Simulation	Terminal eval
01	DI 1 (X132.6)	Simulation	Terminal eval
02	DI 2 (X132.7)	Simulation	Terminal eval
03	DI 3 (X132.8)	Simulation	Terminal eval
04	DI 4 (X132.9)	Simulation	Terminal eval

05	DI 5 (X132.10)	Simulation	Terminal eval
06	DI 6 (X132.11)	Simulation	Terminal eval
07	DI 7 (X132.12)	Simulation	Terminal eval
08	DI 8 (X132.13)	Simulation	Terminal eval
09	DI 9 (X132.14)	Simulation	Terminal eval

Dependency: The setpoint for the input signals is specified using p0796.
See also: p0796

Note
This parameter is not saved when backing up data (p0977).
DI: Digital Input

p0796.2...7 Digital inputs simulation mode setpoint

Variant: S200 Basic PTI
Data type: Unsigned32 **Visible in:** Standard display
Read permission: Read drive data or acknowledge messages
Write permission: Edit device configuration or drive applications
Can be changed in the operating state: Operation
Parameter group: Digital inputs
Unit: -

Min:	Max:	Factory setting:
-	-	0000 0000 bin

Description: Sets the setpoint for the input signals in the digital input simulation mode.

Bit array:

Bit	Signal name	1 signal	0 signal
02	DI 2 (X132.7)	High	Low
03	DI 3 (X132.8)	High	Low
04	DI 4 (X132.9)	High	Low
05	DI 5 (X132.10)	High	Low
06	DI 6 (X132.11)	High	Low
07	DI 7 (X132.12)	High	Low

Dependency: The simulation of a digital input is selected using p0795.
See also: p0795

Note
This parameter is not saved when backing up data (p0977).
DI: Digital Input

p0796.0...9 Digital inputs simulation mode setpoint

Variant: S200 PTI
Data type: Unsigned32 **Visible in:** Standard display
Read permission: Read drive data or acknowledge messages
Write permission: Edit device configuration or drive applications
Can be changed in the operating state: Operation
Parameter group: Digital inputs
Unit: -

Min:	Max:	Factory setting:
-	-	0000 0000 0000 0000 bin

Description: Sets the setpoint for the input signals in the digital input simulation mode.

Bit array:

Bit	Signal name	1 signal	0 signal

00	DI 0 (X132.5)	High	Low
01	DI 1 (X132.6)	High	Low
02	DI 2 (X132.7)	High	Low
03	DI 3 (X132.8)	High	Low
04	DI 4 (X132.9)	High	Low
05	DI 5 (X132.10)	High	Low
06	DI 6 (X132.11)	High	Low
07	DI 7 (X132.12)	High	Low
08	DI 8 (X132.13)	High	Low
09	DI 9 (X132.14)	High	Low

Dependency: The simulation of a digital input is selected using p0795.
See also: p0795

Note
This parameter is not saved when backing up data (p0977).
DI: Digital Input

c0849[0] No Quick Stop / Quick Stop (OFF3)

Data type: Unsigned8 **Visible in:** Extended display
Read permission: Read drive data or acknowledge messages
Write permission: Edit device configuration or drive applications
Parameter group: Enable logic, Drive enable signals
Unit: -

Description: Signal for command "No Quick Stop / Quick Stop (OFF3)"
c0849 = 0 signal:
- OFF3 (braking along the OFF3 ramp (p1135), then pulse cancellation and switching on inhibited)
c0849 = 1 signal:
- No OFF3 (enable possible)

⚠ CAUTION
This signal also remains active when "master control from PC" is activated.

Note
After switching over to closed-loop torque control via telegram (see r1407.2 = 1 signal), Quick Stop (OFF3) does not have a dedicated braking response; however, pulses are canceled when standstill is detected (p1226, p1227).

r0898.0...14 Control word sequence control

Data type: Unsigned16 **Visible in:** Standard display
Read permission: Read drive data or acknowledge messages
Parameter group: Control/status words
Unit: -

Description: Display for the control word of the sequence control.

Bit array:

Bit	Signal name	1 signal	0 signal
00	ON/OFF1	ON	OFF
01	No coast-down / coast-down (OFF2)	No OFF2	OFF2
02	No Quick Stop / Quick Stop (OFF3)	No OFF3	OFF3
03	Enable operation	Yes	No
04	Enable ramp-function generator	Yes	No
05	Continue ramp-function generator	Yes	No
06	Enable speed setpoint	Yes	No
07	Command open brake	Yes	No

10	Control by PLC	Yes	No
12	Enable speed controller	Yes	No
14	Command close brake	Yes	No

Note
For bit 10:
This bit is only relevant for telegram types that cyclically send the associated bit in the control word. Otherwise, r0898.10 is always "Yes".

r0899.0...13 Status word sequence control

Data type: Unsigned16 **Visible in:** Standard display
Read permission: Read drive data or acknowledge messages
Parameter group: Control/status words
Unit: -

Description: Display for the status word of the sequence control.
The status word is cyclically sent from the drive to the higher-level control.

Bit array:

Bit	Signal name	1 signal	0 signal
00	Ready for switching on	Yes	No
01	Ready	Yes	No
02	Operation enabled	Yes	No
03	Jog active	Yes	No
04	No coasting active	OFF2 inactive	OFF2 active
05	No Quick Stop active	OFF3 inactive	OFF3 active
06	Switching on inhibited active	Yes	No
07	Drive ready	Yes	No
08	Controller enable	Yes	No
09	Control requested	Yes	No
11	Pulses enabled	Yes	No
12	Motor holding brake control	Yes	No
13	Motor holding brake status	Yes	No

Note
For bits 00, 01, 02, 04, 05, 06, 09:
For PROFIdrive, these signals are used for status word 1.

r0944 Counter for fault buffer changes

Data type: Unsigned16 **Visible in:** Extended display
Read permission: Read drive data or acknowledge messages
Parameter group: Faults / alarms
Unit: -

Description: Display and numerical signal source for the counter for changes of the fault buffer.
This counter is incremented every time the fault buffer changes.

Recommendation: Used to check whether the fault buffer has been read out consistently.

Dependency: See also: r0945, r0947, r0948, r0949, r2109

r0945[0...63] Fault code

Data type: Unsigned16 **Visible in:** Extended display
Read permission: Read drive data or acknowledge messages
Parameter group: Faults / alarms
Unit: -

Description: Displays the codes of faults that have occurred.

Dependency: See also: r0947, r0948, r0949, r2109, r2130, r2133, r2136, r3122

NOTICE
The properties of the fault buffer should be taken from the corresponding product documentation.

Note
The buffer parameters are cyclically updated (states are indicated in r2139).
Fault buffer structure (general principle):
r0945[0], r0949[0] or r2133[0], r2130[0], r0948[0], r2136[0], r2109[0]
--> Fault 1 (oldest active fault) of the active incident
. . .
r0945[7], r0949[7] or r2133[7], r2130[7], r0948[7], r2136[7], r2109[7]
--> fault 8 (latest active fault) of the active incident

For more than 8 active faults, only the entries are overwritten at the eighth position (index 7).

History of acknowledged faults:
If a fault incident is acknowledged, then all alarms of the 1st fault incident are transferred into the 2nd fault incident, this becomes the 1st acknowledged fault incident.
The 2nd incident is transferred into the 3rd, the 3rd into the 4th etc. The last incident is rejected.

r0945[8], r0949[8] or r2133[8], r2130[0], r0948[8], r2136[8], r2109[8]
--> fault 1 of the 1st acknowledged incident
. . .
r0945[16], r0949[16] or r2133[16], r2130[16], r0948[16], r2136[16], r2109[16]
--> fault 1 of the 2nd acknowledged incident
. . .
r0945[56], r0949[56] or r2133[56], r2130[56], r0948[56], r2136[56], r2109[56]
--> fault 1 of the 7th acknowledged incident
. . .
r0945[63], r0949[63] or r2133[63], r2130[63], r0948[63], r2136[63], r2109[63]
--> fault 8 (oldest fault that has gone) of the 7th acknowledged incident

r0947[0...63] Fault number

Data type: Unsigned16 **Visible in:** Extended display
Read permission: Read drive data or acknowledge messages
Parameter group: Faults / alarms
Unit: -

Description: Displays the numbers of faults that have occurred.

Dependency: See also: r0945

NOTICE
The properties of the fault buffer should be taken from the corresponding product documentation.

Note
The buffer parameters are cyclically updated (states are indicated in r2139).
Fault buffer structure (general principle):
r0945[0], r0949[0] or r2133[0], r2130[0], r0948[0], r2136[0], r2109[0] --> fault 1 (oldest active fault) of the active incident
. . .
r0945[7], r0949[7] or r2133[7], r2130[7], r0948[7], r2136[7], r2109[7] --> fault 8 (latest active fault) of the active incident
For more than 8 active faults, only the entries are overwritten at the eighth position (index 7).

History of acknowledged faults:
If a fault incident is acknowledged, then all alarms of the 1st fault incident are transferred into the 2nd fault incident, this becomes the 1st acknowledged fault incident.
The 2nd incident is transferred into the 3rd, the 3rd into the 4th etc. The last incident is rejected.

r0945[8], r0949[8] or r2133[8], r2130[0], r0948[8], r2136[8], r2109[8] --> fault 1 of the 1st acknowledged incident
. . .
r0945[16], r0949[16] or r2133[16], r2130[16], r0948[16], r2136[16], r2109[16] --> fault 1 of the 2nd acknowledged incident
. . .
r0945[56], r0949[56] or r2133[56], r2130[56], r0948[56], r2136[56], r2109[56] --> fault 1 of the 7th acknowledged incident
. . .
r0945[63], r0949[63] or r2133[63], r2130[63], r0948[63], r2136[63], r2109[63] --> fault 8 (oldest fault that has gone) of the 7th acknowledged incident

r0948[0...63] Fault time received in milliseconds

Data type: Unsigned32 **Visible in:** Extended display
Read permission: Read drive data or acknowledge messages
Parameter group: Faults / alarms
Unit: ms

Description: Displays the system runtime in milliseconds when the fault occurred.

Dependency: See also: r0945, r0947, r0949, r2109, r2114, r2130, r2133, r2136, r3122

NOTICE
The time comprises r2130 (days) and r0948 (milliseconds).

Note
The buffer parameters are cyclically updated in the background (refer to status signal in r2139).
The structure of the fault buffer and the assignment of the indices is shown in r0945.
When the parameter is read via PROFIdrive, the TimeDifference data type applies.

r0949[0...63] Fault value

Data type: Integer32 **Visible in:** Extended display
Read permission: Read drive data or acknowledge messages
Parameter group: Faults / alarms
Unit: -

Description: Displays additional information about the fault that occurred (as integer number).

Dependency: See also: r0945, r0947, r0948, r2109, r2130, r2133, r2136, r3122

Note
The buffer parameters are cyclically updated in the background (refer to status signal in r2139).
The structure of the fault buffer and the assignment of the indices is shown in r0945.

p0952 Fault cases counter

Data type: Unsigned16 **Visible in:** Extended display
Read permission: Read drive data or acknowledge messages
Write permission: Edit device configuration or drive applications
Can be changed in the operating state: Operation
Parameter group: Faults / alarms
Unit: -

Min:	Max:	Factory setting:
0	65535	0

Description: Number of fault situations that have occurred since the last reset.

Dependency: The fault buffer is deleted (cleared) by setting p0952 to 0.
In order that faults with "POWER ON" acknowledgment can also be cleared from the fault buffer, POWER ON must first be carried out.
See also: r0945, r0947, r0948, r0949, r2109, r2130, r2133, r2136

r0964[0...6] Device identification

Data type: Unsigned16 **Visible in:** Standard display
Read permission: Read drive data or acknowledge messages
Parameter group: System identification
Unit: -

Description: Displays the device identification.

Index:
[0] = Company (Siemens = 42)
[1] = Device type
[2] = Firmware version
[3] = Firmware date (year)
[4] = Firmware date (day/month)
[5] = Reserved
[6] = Firmware patch/hot fix

Note
Example:
r0964[0] = 42 --> SIEMENS
r0964[1] = device type, see below
r0964[2] = 602 --> first part firmware version V06.02 (second part, refer to index 6)
r0964[3] = 2023 --> year 2023
r0964[4] = 1706 --> June 17
r0964[5] = 1 --> 1 (fixed value)
r0964[6] = 0 --> second part firmware version (complete version: V06.02.00.00)
Device type:
r0964[1] = 11200 --> SINAMICS S200 PN
r0964[1] = 11202 --> SINAMICS S200 PTI
r0964[1] = 11210 --> SINAMICS S200 Basic PN
r0964[1] = 11212 --> SINAMICS S200 Basic PTI

p0972 Drive reset

Data type: Unsigned16 **Visible in:** Extended display
Read permission: Read drive data or acknowledge messages
Write permission: Edit device configuration or drive applications
Can be changed in the operating state: Ready for operation

Parameter group: Save & reset

Unit: -

Min:	**Max:**	**Factory setting:**
0	3	0

Description: Sets the required procedure to execute a hardware reset for the drive.

Value:

0: Inactive

1: Hardware-Reset immediate

2: Hardware reset preparation

3: Hardware reset after cyclic communication has failed

⚠ DANGER

It must be absolutely ensured that the system is in a safe condition.
The memory card/device memory of the converter must not be accessed.

Note

For value = 1:
The reset is immediately executed and communications interrupted.
The reset operation should be checked once communications have been established.
This value cannot be set in operation.
For value = 2:
Help to check the reset operation.
- Firstly, set p0972 = 2 and then read back.
- Secondly, set p0972 = 1 (it is possible that this request is no longer acknowledged). The communication is then interrupted.
- The reset operation should be checked once communications have been established.
For value = 3:
The reset is executed after interrupting cyclic communication. This setting is used to implement a synchronized reset by a control for several drives.
The reset is immediately executed if cyclic communications is not active.
The reset operation should be checked once communications have been established.

Checking the reset operation:
After the drive has been restarted and communications have been established, read parameter p0972 and check the following:
p0972 = 0 --> the reset was successfully executed.
p0972 > 0 --> the reset was not executed.

r0975[0...10] Converter identification

Data type: Unsigned16 **Visible in:** Extended display

Read permission: Read drive data or acknowledge messages

Parameter group: System identification

Unit: -

Description: Displays the identification of the converter. The drive internally comprises components, device and converter. Both components require their own identification parameters according to PROFIdrive.

Index:
[0] = Company (Siemens = 42)
[1] = Converter type
[2] = Firmware version
[3] = Firmware date (year)
[4] = Firmware date (day/month)
[5] = PROFIdrive converter type class
[6] = PROFIdrive converter subtype class
[7] = Reserved
[8] = Reserved
[9] = Reserved
[10] = Firmware patch/hot fix

Dependency:
See also: r0964

Note
Example:
r0975[0] = 42 --> SIEMENS
r0975[1] = 311 --> SERVO converter type
r0975[2] = 602 --> first part firmware version V06.02 (second part refer to index 10)
r0975[3] = 2023 --> year 2023
r0975[4] = 1706 --> 17th of June
r0975[5] = 1 --> PROFIdrive type class = 1 (axis)
r0975[6] = 8 --> PROFIdrive subtype class = 4 (application class)
r0975[7] = 1 --> 1 (fixed value)
r0975[8] = 0 (reserved)
r0975[9] = 0 (reserved)
r0975[10] = 0 --> second part firmware version (complete version: V06.02.00.00)

p0976 Reset all parameters

Data type: Unsigned16 **Visible in:** Extended display
Read permission: Read drive data or acknowledge messages
Write permission: Edit device configuration or drive applications
Can be changed in the operating state: Ready for operation
Parameter group: Save & reset
Unit: -

Min:	Max:	Factory setting:
0	1	0

Description:
Resets all drive system parameters to the factory settings.

Value:
0: Inactive
1: Start to reset all parameters

NOTICE
Writing to parameters is inhibited during the reset operation.

p0977 Save all parameters

Data type: Unsigned16 **Visible in:** Extended display
Read permission: Read drive data or acknowledge messages
Write permission: Edit device configuration or drive applications
Can be changed in the operating state: Operation
Parameter group: Save & reset
Unit: -

Min:	Max:	Factory setting:
0	1	0

Description: Retentively saves all parameters of the drive system to the non-volatile memory.
When saving, only the adjustable parameters intended to be saved are taken into account.

Value:
0: Inactive
1: Save in non-volatile memory - Loaded at POWER ON

Dependency: See also: p0976

NOTICE
The converter supply voltage may only be switched off after saving has been completed (i.e. after saving has started, wait until the parameter again has a value of 0).
Writing to parameters is inhibited while saving.

r0979[0...30] PROFIdrive encoder format

Data type: Unsigned32 **Visible in:** Standard display
Read permission: Read drive data or acknowledge messages
Parameter group: System identification, Configuration
Unit: -

Description: Displays the actual position encoder used according to PROFIdrive.

Index:
[0] = Header
[1] = Motor encoder type
[2] = Motor encoder resolution
[3] = Shift factor G1_XIST1
[4] = Shift factor G1_XIST2
[5] = Distinguishable revolutions motor encoder
[6...10] = Reserved
[11] = Type PTI
[12] = PTI resolution
[13] = Shift factor G2_XIST1
[14] = Shift factor G2_XIST2
[15] = Distinguishable revolutions PTI
[16...30] = Reserved

Note
Information about the individual indices can be taken from the following literature:
PROFIdrive Profile Drive Technology

r0980[0...299] List of existing parameters 1

Data type: Unsigned16 **Visible in:** Extended display
Read permission: Read drive data or acknowledge messages
Parameter group: System identification
Unit: -

Description: Displays the parameters that exist for this drive.

Note
Modified parameters are displayed in indices 0 to 298. If an index contains the value 0, then the list ends here. In a long list, index 299 contains the parameter number at which position the list continues.
This list consists solely of the following parameters:
r0980[0...299], r0981[0...299] ... r0989[0...299]
The parameters in this list are not displayed in the parameter lists of the commissioning tool. However, they can be read from a higher-level control system.

p1001[0] Fixed speed setpoint 1

Variant:	S200 PTI	
Available when function is active:	Extended setpoint channel	
Data type: FloatingPoint32	**Visible in:** Standard display	
Read permission:	Read drive data or acknowledge messages	
Write permission:	Edit device configuration or drive applications	
Can be changed in the operating state:	Operation	
Parameter group:	Fixed setpoints	
Unit: rpm		
Min:	**Max:**	**Factory setting:**
-210000.000 [rpm]	210000.000 [rpm]	0.000 [rpm]

Description: Sets fixed speed setpoint 1.

Dependency: See also: c1020, c1021, c1022

p1002[0] Fixed speed setpoint 2

Variant:	S200 PTI	
Available when function is active:	Extended setpoint channel	
Data type: FloatingPoint32	**Visible in:** Standard display	
Read permission:	Read drive data or acknowledge messages	
Write permission:	Edit device configuration or drive applications	
Can be changed in the operating state:	Operation	
Parameter group:	Fixed setpoints	
Unit: rpm		
Min:	**Max:**	**Factory setting:**
-210000.000 [rpm]	210000.000 [rpm]	0.000 [rpm]

Description: Sets fixed speed setpoint 2.

Dependency: See also: c1020, c1021, c1022

p1003[0] Fixed speed setpoint 3

Variant:	S200 PTI	
Available when function is active:	Extended setpoint channel	
Data type: FloatingPoint32	**Visible in:** Standard display	
Read permission:	Read drive data or acknowledge messages	
Write permission:	Edit device configuration or drive applications	
Can be changed in the operating state:	Operation	
Parameter group:	Fixed setpoints	
Unit: rpm		
Min:	**Max:**	**Factory setting:**
-210000.000 [rpm]	210000.000 [rpm]	0.000 [rpm]

Description: Sets fixed speed setpoint 3.

Dependency: See also: c1020, c1021, c1022

p1004[0] Fixed speed setpoint 4

Variant: S200 PTI

Available when function is active:	Extended setpoint channel	
Data type: FloatingPoint32	**Visible in:** Standard display	
Read permission:	Read drive data or acknowledge messages	
Write permission:	Edit device configuration or drive applications	
Can be changed in the operating state:	Operation	
Parameter group:	Fixed setpoints	
Unit: rpm		
Min:	**Max:**	**Factory setting:**
-210000.000 [rpm]	210000.000 [rpm]	0.000 [rpm]

Description: Sets fixed speed setpoint 4.

Dependency: See also: c1020, c1021, c1022

p1005[0] Fixed speed setpoint 5

Variant:	S200 PTI	
Available when function is active:	Extended setpoint channel	
Data type: FloatingPoint32	**Visible in:** Standard display	
Read permission:	Read drive data or acknowledge messages	
Write permission:	Edit device configuration or drive applications	
Can be changed in the operating state:	Operation	
Parameter group:	Fixed setpoints	
Unit: rpm		
Min:	**Max:**	**Factory setting:**
-210000.000 [rpm]	210000.000 [rpm]	0.000 [rpm]

Description: Sets fixed speed setpoint 5.

Dependency: See also: c1020, c1021, c1022

p1006[0] Fixed speed setpoint 6

Variant:	S200 PTI	
Available when function is active:	Extended setpoint channel	
Data type: FloatingPoint32	**Visible in:** Standard display	
Read permission:	Read drive data or acknowledge messages	
Write permission:	Edit device configuration or drive applications	
Can be changed in the operating state:	Operation	
Parameter group:	Fixed setpoints	
Unit: rpm		
Min:	**Max:**	**Factory setting:**
-210000.000 [rpm]	210000.000 [rpm]	0.000 [rpm]

Description: Sets fixed speed setpoint 6.

Dependency: See also: c1020, c1021, c1022

p1007[0] Fixed speed setpoint 7

Variant:	S200 PTI
Available when function is active:	Extended setpoint channel

Data type: FloatingPoint32	**Visible in:** Standard display	
Read permission:	Read drive data or acknowledge messages	
Write permission:	Edit device configuration or drive applications	
Can be changed in the operating state:	Operation	
Parameter group:	Fixed setpoints	
Unit: rpm		
Min:	**Max:**	**Factory setting:**
-210000.000 [rpm]	210000.000 [rpm]	0.000 [rpm]

Description: Sets fixed speed setpoint 7.

Dependency: See also: c1020, c1021, c1022

p1008[0] Fixed speed setpoint 8

Variant:	S200 PTI	
Available when function is active:	Extended setpoint channel	
Data type: FloatingPoint32	**Visible in:** Standard display	
Read permission:	Read drive data or acknowledge messages	
Write permission:	Edit device configuration or drive applications	
Can be changed in the operating state:	Operation	
Parameter group:	Fixed setpoints	
Unit: rpm		
Min:	**Max:**	**Factory setting:**
-210000.000 [rpm]	210000.000 [rpm]	0.000 [rpm]

Description: Sets fixed speed setpoint 8.

Dependency: See also: c1020, c1021, c1022

c1020[0] Fixed speed setpoint selection bit 0

Variant:	S200 PTI
Available when function is active:	Extended setpoint channel
Data type: Unsigned8	**Visible in:** Extended display
Read permission:	Read drive data or acknowledge messages
Write permission:	Edit device configuration or drive applications
Parameter group:	Fixed setpoints
Unit: -	

Description: Signal to select the fixed speed setpoint.

Dependency: Selects the required fixed speed setpoint using c1020 ... c1022.
Sets the values for the fixed speed setpoints 1 ... 8 using p1001 ... p1008.
See also: c1021, c1022

Note
If a fixed speed setpoint has not been selected (c1020 ... c1022 = 0), then the fixed speed setpoint = 0.

c1021[0] Fixed speed setpoint selection bit 1

Variant:	S200 PTI
Available when function is active:	Extended setpoint channel
Data type: Unsigned8	**Visible in:** Extended display
Read permission:	Read drive data or acknowledge messages

Write permission: Edit device configuration or drive applications
Parameter group: Fixed setpoints
Unit: -

Description: Signal to select the fixed speed setpoint.

Dependency: Selects the required fixed speed setpoint using c1020 ... c1022.
Sets the values for the fixed speed setpoints 1 ... 8 using p1001 ... p1008.
See also: c1020, c1022

Note
If a fixed speed setpoint has not been selected (c1020 ... c1022 = 0), then the fixed speed setpoint = 0.

c1022[0] Fixed speed setpoint selection bit 2

Variant: S200 PTI
Available when function is active: Extended setpoint channel
Data type: Unsigned8 **Visible in:** Extended display
Read permission: Read drive data or acknowledge messages
Write permission: Edit device configuration or drive applications
Parameter group: Fixed setpoints
Unit: -

Description: Signal to select the fixed speed setpoint.

Dependency: Selects the required fixed speed setpoint using c1020 ... c1022.
Sets the values for the fixed speed setpoints 1 ... 8 using p1001 ... p1008.
See also: c1020, c1021

Note
If a fixed speed setpoint has not been selected (c1020 ... c1022 = 0), then the fixed speed setpoint = 0.

p1082[0] Maximum speed

Data type: FloatingPoint32 **Visible in:** Standard display
Read permission: Read drive data or acknowledge messages
Write permission: Edit device configuration or drive applications
Can be changed in the operating state: Ready for operation
Parameter group: Speed limiting, Speed controller, Limits
Unit: rpm

Min:	Max:	Factory setting:
0.000 [rpm]	210000.000 [rpm]	1500.000 [rpm]

Description: Sets the maximum motor speed to a value less than or equal to the maximum motor speed (p0322).
The set value is valid for both directions of rotation.

Dependency: See also: p0322

p1083[0] Speed limit in positive direction of rotation

Data type: FloatingPoint32 **Visible in:** Standard display
Read permission: Read drive data or acknowledge messages
Write permission: Edit device configuration or drive applications
Can be changed in the operating state: Operation
Parameter group: Speed limiting, Speed controller, Limits
Unit: rpm

Min:	Max:	Factory setting:
0.000 [rpm]	210000.000 [rpm]	210000.000 [rpm]

Description: Sets the maximum speed for the positive direction.

p1086[0] Speed limit in negative direction of rotation

Data type: FloatingPoint32 **Visible in:** Standard display

Read permission: Read drive data or acknowledge messages

Write permission: Edit device configuration or drive applications

Can be changed in the operating state: Operation

Parameter group: Speed limiting, Speed controller, Limits

Unit: rpm

Min:	Max:	Factory setting:
-210000.000 [rpm]	0.000 [rpm]	-210000.000 [rpm]

Description: Sets the speed limit for the negative direction.

p1115 Ramp-function generator selection

Variant: S200 PTI

Available when function is active: Extended setpoint channel

Data type: Integer16 **Visible in:** Extended display

Read permission: Read drive data or acknowledge messages

Write permission: Edit device configuration or drive applications

Can be changed in the operating state: Ready for operation

Parameter group: Ramp-function generator

Unit: -

Min:	Max:	Factory setting:
0	1	0

Description: Sets the ramp-function generator type.

Value:
- 0: Basic ramp-function generator
- 1: Extended ramp-function generator

Note
Another ramp-function generator type can only be selected when the motor is at a standstill.

p1120[0] Ramp-function generator ramp-up time

Variant: S200 PTI

Available when function is active: Extended setpoint channel

Data type: FloatingPoint32 **Visible in:** Standard display

Read permission: Read drive data or acknowledge messages

Write permission: Edit device configuration or drive applications

Can be changed in the operating state: Operation

Parameter group: Ramp-function generator, Limits

Unit: s

Min:	Max:	Factory setting:
0.000 [s]	999999.000 [s]	10.000 [s]

Description: Setting the ramp-up time of the ramp-function generator.
The ramp-function generator ramps-up the speed setpoint from standstill (setpoint = 0) up to the maximum speed (p1082) in this time.

Dependency: See also: p1082

p1121[0] OFF1 ramp-down time

Data type: FloatingPoint32	**Visible in:** Standard display	
Read permission:	Read drive data or acknowledge messages	
Write permission:	Edit device configuration or drive applications	
Can be changed in the operating state:	Operation	
Parameter group:	Quick commissioning	
Unit: s		
Min:	**Max:**	**Factory setting:**
0.000 [s]	999999.000 [s]	1.000 [s]

Description: Sets the ramp-down time after an OFF1 command.
The value is referred to the maximum speed (p1082).
After an OFF1 command, within this time, the speed setpoint is ramped down from the maximum speed (p1082) to standstill.

Dependency: See also: p1082

p1130[0] Ramp-function generator initial rounding-off time

Variant:	S200 PTI	
Available when function is active:	Extended setpoint channel	
Data type: FloatingPoint32	**Visible in:** Extended display	
Read permission:	Read drive data or acknowledge messages	
Write permission:	Edit device configuration or drive applications	
Can be changed in the operating state:	Operation	
Parameter group:	Ramp-function generator	
Unit: s		
Min:	**Max:**	**Factory setting:**
0.000 [s]	30.000 [s]	0.000 [s]

Description: Sets the initial rounding-off time for the extended ramp-function generator.
The value applies to ramp-up and ramp-down.

Note
Rounding-off times avoid an abrupt response and prevent damage to the mechanical system.

p1131[0] Ramp-function generator final rounding-off time

Variant:	S200 PTI
Available when function is active:	Extended setpoint channel
Data type: FloatingPoint32	**Visible in:** Extended display
Read permission:	Read drive data or acknowledge messages
Write permission:	Edit device configuration or drive applications
Can be changed in the operating state:	Operation
Parameter group:	Ramp-function generator
Unit: s	

Min:	Max:	Factory setting:
0.000 [s]	30.000 [s]	0.000 [s]

Description: Sets the final rounding-off time for the extended ramp generator.
The value applies to ramp-up and ramp-down.

Note
Rounding-off times avoid an abrupt response and prevent damage to the mechanical system.

p1135[0] OFF3 ramp-down time

Data type: FloatingPoint32 **Visible in:** Standard display
Read permission: Read drive data or acknowledge messages
Write permission: Edit device configuration or drive applications
Can be changed in the operating state: Operation
Parameter group: Ramp-function generator, Enable logic, Setpoint addition, Limits
Unit: s

Min:	Max:	Factory setting:
0.000 [s]	600.000 [s]	0.000 [s]

Description: Sets the ramp-down time from the maximum speed down to zero speed for the OFF3 command.

p1215[0] Motor holding brake configuration

Variant: S200 Basic PTI
Data type: Integer16 **Visible in:** Standard display
Read permission: Read drive data or acknowledge messages
Write permission: Edit device configuration or drive applications
Can be changed in the operating state: Ready for operation
Parameter group: Motor holding brake, Basic functions
Unit: -

Min:	Max:	Factory setting:
0	3	0

Description: Sets the holding brake configuration.

Value:
0: No motor holding brake available
3: Motor holding brake like seq control, conn via interconnection

Dependency: See also: p1216, p1217, p1226, p1227, p1228

⚠ CAUTION
For the setting p1215 = 0, if a brake is used, it remains closed. If the motor moves, this will destroy the brake.

NOTICE
If p1215 was set to 3, then when the pulses are canceled, the brake is closed even if the motor is still rotating. Pulses can be canceled as a result of an OFF2 or "Enable operation" via fieldbus or a fault with OFF2 response.

Note
If p1215 is set = 0 (no holding brake available) when running up, then the motor holding brake is automatically identified.
If an external motor holding brake is being used, then p1215 should be set to 3 and r0899.12 should be interconnected to a freely selectable digital output as control signal. This digital output must control the brake via a coupling relay or contactor relay.

p1215[0] Motor holding brake configuration

Variant: S200 PTI
Data type: Integer16 **Visible in:** Standard display
Read permission: Read drive data or acknowledge messages

Write permission:	Edit device configuration or drive applications	
Can be changed in the operating state:	Ready for operation	
Parameter group:	Motor holding brake, Basic functions	
Unit: -		
Min:	**Max:**	**Factory setting:**
0	2	0

Description: Sets the holding brake configuration.

Value:
0: No motor holding brake available
1: Motor holding brake acc. to sequence control
2: Motor holding brake always open

Dependency: See also: p1216, p1217, p1226, p1227, p1228

⚠ CAUTION

For the setting p1215 = 0, if a brake is used, it remains closed. If the motor moves, this will destroy the brake.
If the brake must hold a load, then it is not permissible that p1215 is set = 2, as otherwise damage can occur as a result of the falling load.

NOTICE

If p1215 was set to 1, then when the pulses are cancelled, the brake is closed even if the motor is still rotating. Pulses can be canceled as a result of withdrawing OFF2, or withdrawing enable operation or by faults with an OFF2 response.

Note
If p1215 is set = 0 (no holding brake available) when running up, then the motor holding brake is automatically identified.
If a motor holding brake is detected, then p1215 is set = 2 (motor holding brake as for sequence control).
For value 2:
This setting allows the motor shaft to be rotated for installation purposes.

p1216[0] Motor holding brake opening time

Data type: FloatingPoint32	**Visible in:** Extended display	
Read permission:	Read drive data or acknowledge messages	
Write permission:	Edit device configuration or drive applications	
Can be changed in the operating state:	Operation	
Parameter group:	Motor holding brake	
Unit: ms		
Min:	**Max:**	**Factory setting:**
0 [ms]	10000 [ms]	100 [ms]

Description: Displays the opening time for the motor holding brake.
The speed setpoint is kept at 0 for this time. The speed setpoint is then enabled.

Dependency: See also: p1215, p1217

p1217[0] Motor holding brake closing time

Data type: FloatingPoint32	**Visible in:** Extended display	
Read permission:	Read drive data or acknowledge messages	
Write permission:	Edit device configuration or drive applications	
Can be changed in the operating state:	Operation	
Parameter group:	Motor holding brake	
Unit: ms		
Min:	**Max:**	**Factory setting:**
0 [ms]	10000 [ms]	100 [ms]

Description: Sets the time to apply the motor holding brake.

After OFF1 or OFF3 and the holding brake is controlled (the brake closes), then the drive remains closed-loop controlled for this time stationary with a speed setpoint/velocity setpoint of zero. The pulses are canceled when the time expires.

Recommendation: This time should be set longer than the actual closing time of the brake. This ensures that the pulses are only canceled after the brake has closed.

Dependency: See also: p1215, p1216

NOTICE

If the selected closing time is too short with respect to the actual closing time of the brake, then the load can sag.

If the closing time is selected to be too long with respect to the actual closing time of the brake, the control works against the brake and therefore reduces its lifetime.

Note

The time is preassigned with the value saved in the motor.

p1226[0] Threshold for standstill detection

Data type: FloatingPoint32	**Visible in:** Extended display	
Read permission:	Read drive data or acknowledge messages	
Write permission:	Edit device configuration or drive applications	
Can be changed in the operating state:	Operation	
Parameter group:	Motor holding brake, Enable logic	
Unit: rpm		
Min:	**Max:**	**Factory setting:**
0.00 [rpm]	210000.00 [rpm]	20.00 [rpm]

Description: Sets the speed threshold for the standstill detection.

Acts on the actual value and setpoint monitoring.

When braking with OFF1 or OFF3, when the threshold is undershot, standstill is identified.

The following applies when the brake control is activated:

When the threshold is undershot, the brake control is started and the system waits for the brake closing time in p1217. The pulses are then canceled.

If the brake control is not activated, the following applies:

When the threshold is undershot, the pulses are canceled and the drive coasts down.

Dependency: See also: p1215, p1216, p1217, p1227

Note

Standstill is identified in the following cases:

- The speed actual value falls below the speed threshold in p1226 and the time started after this in p1228 has expired.
- The speed setpoint falls below the speed threshold in p1226 and the time started after this in p1227 has expired.

The actual value sensing is subject to measuring noise. For this reason, standstill cannot be detected if the speed threshold is too low.

p1227[0] Standstill detection monitoring time

Data type: FloatingPoint32	**Visible in:** Extended display	
Read permission:	Read drive data or acknowledge messages	
Write permission:	Edit device configuration or drive applications	
Can be changed in the operating state:	Operation	
Parameter group:	Motor holding brake, Enable logic	
Unit: s		
Min:	**Max:**	**Factory setting:**
0.000 [s]	300.000 [s]	4.000 [s]

Description: Sets the monitoring time for the standstill detection.

When braking with OFF1 or OFF3, standstill is identified after the time set here has expired, after the setpoint speed has fallen below the threshold p1226.

After this, the brake control is started, the system waits for the closing time in p1217 and then the pulses are canceled.

Dependency: See also: p1215, p1216, p1217, p1226

Note

Standstill is detected if at least one of the following conditions is satisfied:
- The speed actual value falls below the speed threshold in p1226 and the time started after this in p1228 has expired.
- The speed setpoint falls below the speed threshold in p1226 and the time started after this in p1227 has expired.

For p1227 = 300.000 s the following applies:
Monitoring is deactivated.
For p1227 = 0.000 s, the following applies:
With OFF1 or OFF3 and a ramp-down time = 0, the pulses are immediately canceled and the motor "coasts" down.

p1228[0] Pulse cancellation delay time

Data type: FloatingPoint32 **Visible in:** Extended display

Read permission: Read drive data or acknowledge messages

Write permission: Edit device configuration or drive applications

Can be changed in the operating state: Operation

Parameter group: Motor holding brake, Enable logic

Unit: s

Min:	Max:	Factory setting:
0.000 [s]	299.000 [s]	0.000 [s]

Description: Sets the delay time for pulse cancellation.

After OFF1 or OFF3, the pulses are canceled, if at least one of the following conditions is fulfilled:
- The speed actual value falls below the threshold in p1226 and the time started after this in p1228 has expired.
- The speed setpoint falls below the threshold in p1226 and the time started after this in p1227 has expired.

Dependency: See also: p1226, p1227

NOTICE

When the motor holding brake is activated, pulse cancellation is additionally delayed by the brake closing time (p1217).

r1407.0...28 Status word speed controller

Data type: Unsigned32 **Visible in:** Extended display

Read permission: Read drive data or acknowledge messages

Parameter group: Torque setpoints, Torque limiting, Speed actual value filter, Control/status words, Acceleration model, Setpoint addition, Speed precontrol, Speed setpoint filter

Unit: -

Description: Displays the status word of the speed controller.

Bit array:

Bit	Signal name	1 signal	0 signal
00	Reserved	Yes	No
01	Reserved	Yes	No
02	Torque control active	Yes	No
04	Speed setpoint from DSC	Yes	No
05	Speed controller I component frozen	Yes	No
06	Speed controller I component set	Yes	No
07	Torque limit reached	Yes	No
08	Upper torque limit active	Yes	No
09	Lower torque limit active	Yes	No

11	Speed setpoint limited	Yes	No
13	Reserved	Yes	No
19	Reserved	Yes	No
20	Reserved	Yes	No
21	Reserved	Yes	No
22	Reserved	Yes	No
23	Torque-speed precontrol with encoder on	Yes	No
24	Moment of inertia estimator active	Yes	No
25	Load estimate active	Yes	No
26	Moment of inertia estimator stabilized	Yes	No
28	Speed precontrol	For symmetrizing	For setp_filter 2

Note
For bit 04:
For bit 04 = 1 signal, the following conditions must be fulfilled:
- A telegram type that supports DSC must be selected (r0922 = 5 or 105)
- OFF1, OFF3 or STOP2 must not be active.
- Master control must not be active.
The following conditions can mean that the DSC function is not active in spite of the fact that the bit is set:
- DSC is not switched in on the control side; this means that KPC = 0 is transferred.

p1414[0].0...1 Speed setpoint filter activation

Data type: Unsigned16 **Visible in:** Extended display
Read permission: Read drive data or acknowledge messages
Write permission: Edit device configuration or drive applications
Can be changed in the operating state: Operation
Parameter group: Speed setpoint filter
Unit: -

Min:	Max:	Factory setting:
-	-	0000 bin

Description: Setting for activating/deactivating the speed setpoint filter.
Recommendation: If only one filter is required, filter 1 should be activated and filter 2 deactivated, to avoid excessive processing time.

Bit array:

Bit	Signal name	1 signal	0 signal
00	Activate filter 1	Yes	No
01	Activate filter 2	Yes	No

Dependency: The individual speed setpoint filters are parameterized from p1415.

p1415[0] Speed setpoint filter 1 type

Data type: Integer16 **Visible in:** Extended display
Read permission: Read drive data or acknowledge messages
Write permission: Edit device configuration or drive applications
Can be changed in the operating state: Operation
Parameter group: Speed setpoint filter
Unit: -

Min:	Max:	Factory setting:
0	2	0

Description: Sets the type for speed setpoint filter 1.
Value:
0: Low pass: PT1
1: Low pass: PT2

2: General 2nd order filter

Dependency: PT1 low pass: p1416
PT2 low pass: p1417, p1418
General filter: p1417 ... p1420

p1416[0] Speed setpoint filter 1 time constant

Data type: FloatingPoint32 **Visible in:** Extended display
Read permission: Read drive data or acknowledge messages
Write permission: Edit device configuration or drive applications
Can be changed in the operating state: Operation
Parameter group: Speed setpoint filter
Unit: ms

Min:	Max:	Factory setting:
0.00 [ms]	5000.00 [ms]	0.00 [ms]

Description: Sets the time constant for the speed setpoint filter 1 (PT1).

Dependency: See also: p1414, p1415

Note
This parameter is only effective if the filter is set as a PT1 low pass.

p1417[0] Speed setpoint filter 1 denominator natural frequency

Data type: FloatingPoint32 **Visible in:** Extended display
Read permission: Read drive data or acknowledge messages
Write permission: Edit device configuration or drive applications
Can be changed in the operating state: Operation
Parameter group: Speed setpoint filter
Unit: Hz

Min:	Max:	Factory setting:
0.5 [Hz]	16000.0 [Hz]	2000.0 [Hz]

Description: Sets the denominator natural frequency for speed setpoint filter 1 (PT2, general filter).

Dependency: See also: p1414, p1415

Note
This parameter is only effective if the speed filter is parameterized as a PT2 low pass or as general filter.
The filter is only effective if the natural frequency is less than half of the sampling frequency.

p1418[0] Speed setpoint filter 1 denominator damping

Data type: FloatingPoint32 **Visible in:** Extended display
Read permission: Read drive data or acknowledge messages
Write permission: Edit device configuration or drive applications
Can be changed in the operating state: Operation
Parameter group: Speed setpoint filter
Unit: -

Min:	Max:	Factory setting:
0.001	10.000	0.700

Description: Sets the denominator damping for speed setpoint filter 1 (PT2, general filter).

Dependency: See also: p1414, p1415

Note
This parameter is only effective if the speed filter is parameterized as a PT2 low pass or as general filter.

p1419[0] Speed setpoint filter 1 numerator natural frequency

Data type: FloatingPoint32 **Visible in:** Extended display
Read permission: Read drive data or acknowledge messages
Write permission: Edit device configuration or drive applications
Can be changed in the operating state: Operation
Parameter group: Speed setpoint filter
Unit: Hz

Min:	Max:	Factory setting:
0.5 [Hz]	16000.0 [Hz]	2000.0 [Hz]

Description: Sets the numerator natural frequency for speed setpoint filter 1 (general filter).
Dependency: See also: p1414, p1415

Note
This parameter is only effective if the speed filter is set as a general filter.
The filter is only effective if the natural frequency is less than half of the sampling frequency.

p1420[0] Speed setpoint filter 1 numerator damping

Data type: FloatingPoint32 **Visible in:** Extended display
Read permission: Read drive data or acknowledge messages
Write permission: Edit device configuration or drive applications
Can be changed in the operating state: Operation
Parameter group: Speed setpoint filter
Unit: -

Min:	Max:	Factory setting:
0.000	10.000	0.700

Description: Sets the numerator damping for speed setpoint filter 1 (general filter).
Dependency: See also: p1414, p1415

Note
This parameter is only effective if the speed filter is set as a general filter.

p1421[0] Speed setpoint filter 2 type

Data type: Integer16 **Visible in:** Extended display
Read permission: Read drive data or acknowledge messages
Write permission: Edit device configuration or drive applications
Can be changed in the operating state: Operation
Parameter group: Speed setpoint filter
Unit: -

Min:	Max:	Factory setting:
0	2	0

Description: Sets the type for speed setpoint filter 2.
Value:
0: Low pass: PT1
1: Low pass: PT2
2: General 2nd order filter

Dependency: PT1 low pass: p1422
PT2 low pass: p1423, p1424
General filter: p1423 ... p1426

p1422[0] Speed setpoint filter 2 time constant

Data type: FloatingPoint32 **Visible in:** Extended display
Read permission: Read drive data or acknowledge messages
Write permission: Edit device configuration or drive applications
Can be changed in the operating state: Operation
Parameter group: Speed setpoint filter
Unit: ms

Min:	Max:	Factory setting:
0.00 [ms]	5000.00 [ms]	0.00 [ms]

Description: Sets the time constant for the speed setpoint filter 2 (PT1).
Dependency: See also: p1414, p1421

Note
This parameter is only effective if the speed filter is set as a PT1 low pass.

p1423[0] Speed setpoint filter 2 denominator natural frequency

Data type: FloatingPoint32 **Visible in:** Extended display
Read permission: Read drive data or acknowledge messages
Write permission: Edit device configuration or drive applications
Can be changed in the operating state: Operation
Parameter group: Speed setpoint filter
Unit: Hz

Min:	Max:	Factory setting:
0.5 [Hz]	16000.0 [Hz]	2000.0 [Hz]

Description: Sets the denominator natural frequency for speed setpoint filter 2 (PT2, general filter).
Dependency: See also: p1414, p1421

Note
This parameter is only effective if the speed filter is parameterized as a PT2 low pass or as general filter.
The filter is only effective if the natural frequency is less than half of the sampling frequency.

p1424[0] Speed setpoint filter 2 denominator damping

Data type: FloatingPoint32 **Visible in:** Extended display
Read permission: Read drive data or acknowledge messages
Write permission: Edit device configuration or drive applications
Can be changed in the operating state: Operation
Parameter group: Speed setpoint filter
Unit: -

Min:	Max:	Factory setting:
0.001	10.000	0.700

Description: Sets the denominator damping for speed setpoint filter 2 (PT2, general filter).
Dependency: See also: p1414, p1421

Note
This parameter is only effective if the speed filter is parameterized as a PT2 low pass or as general filter.

p1425[0] Speed setpoint filter 2 numerator natural frequency

Data type: FloatingPoint32 **Visible in:** Extended display
Read permission: Read drive data or acknowledge messages
Write permission: Edit device configuration or drive applications
Can be changed in the operating state: Operation
Parameter group: Speed setpoint filter
Unit: Hz

Min:	Max:	Factory setting:
0.5 [Hz]	16000.0 [Hz]	2000.0 [Hz]

Description: Sets the numerator natural frequency for speed setpoint filter 2 (general filter).
Dependency: See also: p1414, p1421

Note
This parameter is only effective if the speed filter is set as a general filter.
The filter is only effective if the natural frequency is less than half of the sampling frequency.

p1426[0] Speed setpoint filter 2 numerator damping

Data type: FloatingPoint32 **Visible in:** Extended display
Read permission: Read drive data or acknowledge messages
Write permission: Edit device configuration or drive applications
Can be changed in the operating state: Operation
Parameter group: Speed setpoint filter
Unit: -

Min:	Max:	Factory setting:
0.000	10.000	0.700

Description: Sets the numerator damping for speed setpoint filter 2 (general filter).
Dependency: See also: p1414, p1421

Note
This parameter is only effective if the speed filter is set as a general filter.

p1433[0] Speed controller reference model natural frequency

Data type: FloatingPoint32 **Visible in:** Extended display
Read permission: Read drive data or acknowledge messages
Write permission: Edit device configuration or drive applications
Can be changed in the operating state: Operation
Parameter group: Speed controller
Unit: Hz

Min:	Max:	Factory setting:
0.00 [Hz]	8000.00 [Hz]	0.00 [Hz]

Description: Sets the natural frequency of a PT2 element for the reference model of the speed controller.
Recommendation: The reference model is finely set using p1433.

r1438 Speed controller speed setpoint

Data type: FloatingPoint32 **Visible in:** Standard display
Read permission: Read drive data or acknowledge messages
Parameter group: Speed controller
Unit: rpm

Description: Displays the speed setpoint after setpoint limiting for the P component of the speed controller.

p1441[0] Actual speed smoothing time

Data type: FloatingPoint32	**Visible in:** Extended display	
Read permission:	Read drive data or acknowledge messages	
Write permission:	Edit device configuration or drive applications	
Can be changed in the operating state:	Operation	
Parameter group:	Speed controller, Speed actual value filter	
Unit: ms		
Min:	**Max:**	**Factory setting:**
0.00 [ms]	50.00 [ms]	0.00 [ms]

Description: Sets the smoothing time constant (PT1) for the speed actual value.

Dependency: See also: r0063

Note
The speed actual value should be smoothed for encoders with a low pulse number or for resolvers.
After this parameter has been changed, we recommend that the speed controller is adapted and/or the speed controller settings checked Kp (p1460) and Tn (p1462).

p1460[0] Speed controller P gain

Data type: FloatingPoint32	**Visible in:** Standard display	
Read permission:	Read drive data or acknowledge messages	
Write permission:	Edit device configuration or drive applications	
Can be changed in the operating state:	Operation	
Parameter group:	Speed controller	
Unit: Nms/rad		
Min:	**Max:**	**Factory setting:**
0.00000 [Nms/rad]	5e+08 [Nms/rad]	0.30000 [Nms/rad]

Description: Sets the P gain of the speed controller.
The drive determines the P gain for One Button Tuning and writes the value to p1460.
The value can be changed.

Dependency: See also: p1462

Note
The higher the set P gain, the faster and more unstable the control.

p1462[0] Speed controller integral time

Data type: FloatingPoint32	**Visible in:** Standard display	
Read permission:	Read drive data or acknowledge messages	
Write permission:	Edit device configuration or drive applications	
Can be changed in the operating state:	Operation	
Parameter group:	Speed controller	
Unit: ms		
Min:	**Max:**	**Factory setting:**
0.00 [ms]	100000.00 [ms]	10.00 [ms]

Description: Sets the integral time for the speed controller
The drive determines the integral time for One Button Tuning - and writes the value to p1462.

Dependency: See also: p1460

Note
The shorter the integral time, the faster and more unstable the control.

p1498[0] Load moment of inertia

Data type: FloatingPoint32	**Visible in:** Extended display	
Read permission:	Read drive data or acknowledge messages	
Write permission:	Edit device configuration or drive applications	
Can be changed in the operating state:	Operation	
Parameter group:	Speed controller	
Unit: kgm²		
Min:	**Max:**	**Factory setting:**
0.000000 [kgm²]	100000.000000 [kgm²]	0.000000 [kgm²]

Description: Sets the load moment of inertia.
The setting is made during commissioning while the One Button Tuning is being performed.

p1520[0] Torque limit upper

Data type: FloatingPoint32	**Visible in:** Standard display	
Read permission:	Read drive data or acknowledge messages	
Write permission:	Edit device configuration or drive applications	
Can be changed in the operating state:	Operation	
Parameter group:	Torque limiting, Limits	
Unit: Nm		
Min:	**Max:**	**Factory setting:**
-1000000.00 [Nm]	2e+07 [Nm]	0.00 [Nm]

Description: Setting the upper torque limit.
This setting is made as part of the basic commissioning.

Dependency: See also: p1521, p1532, r1538, r1539

p1521[0] Torque limit lower

Data type: FloatingPoint32	**Visible in:** Standard display	
Read permission:	Read drive data or acknowledge messages	
Write permission:	Edit device configuration or drive applications	
Can be changed in the operating state:	Operation	
Parameter group:	Torque limiting, Limits	
Unit: Nm		
Min:	**Max:**	**Factory setting:**
-2e+07 [Nm]	1000000.00 [Nm]	0.00 [Nm]

Description: Sets the lower torque limit
This setting is made as part of the basic commissioning.

Dependency: See also: p1520, p1532, r1538, r1539

p1532[0] Torque limit offset

Data type: FloatingPoint32	**Visible in:** Extended display
Read permission:	Read drive data or acknowledge messages
Write permission:	Edit device configuration or drive applications

Can be changed in the operating state: Operation

Parameter group: Torque limiting

Unit: Nm

Min:	**Max:**	**Factory setting:**
-100000.00 [Nm]	100000.00 [Nm]	0.00 [Nm]

Description: Sets the torque offset for the torque limit.

The setting allows electronic weight equalization to be used for vertical axes.

Recommendation: The torque offset can also be used for torque precontrol or as integrator setting value for the speed controller.

Dependency: See also: p1520, p1521

> ⚠ **DANGER**
>
> If the offset is set higher/lower than the lower/upper torque limit, then the unloaded drive can accelerate up to the maximum speed.

r1538 Upper effective torque limit

Data type: FloatingPoint32 **Visible in:** Standard display

Read permission: Read drive data or acknowledge messages

Parameter group: Torque limiting

Unit: Nm

Description: Displays the currently effective upper torque limit.

> **Note**
>
> The value in r1538 may not exceed the value in p1520.

r1539 Lower effective torque limit

Data type: FloatingPoint32 **Visible in:** Standard display

Read permission: Read drive data or acknowledge messages

Parameter group: Torque limiting

Unit: Nm

Description: Displays the currently effective lower torque limit.

> **Note**
>
> The value in r1539 may not exceed the value in p1521.

p1558 Measure/precontrol hanging/suspended axis force due to weight

Data type: Integer16 **Visible in:** Standard display

Read permission: Read drive data or acknowledge messages

Write permission: Edit device configuration or drive applications

Can be changed in the operating state: Operation

Parameter group: Motor data identification routine

Unit: -

Min:	**Max:**	**Factory setting:**
-1	1	0

Description: Setting to start/reset the measurement of the force due to weight for a hanging axis.

The measurement can be started when the pulses are inhibited or the pulses are enabled (p1558 = 1). If it was started when the pulses were inhibited, then it is only executed after the pulses have been enabled.

For the measurement, the torque to hold the axis is determined and entered into p1532.

Further, this value is used internally for the precontrol.

Value:

-1: Reset values

0: Inactive

1: Start measurement and activate precontrol

Dependency: The pulse enable is withdrawn at the end of the measurement.
See also: p1532

Note
For master control with speed setpoint input from the commissioning tool, the torque precontrol channels are deactivated, so that the weight equalization entered here is not active.

r1651 Torque setpoint function generator

Data type: FloatingPoint32 **Visible in:** Extended display
Read permission: Read drive data or acknowledge messages
Parameter group: Current setpoint filter
Unit: Nm

Description: Displays the torque setpoint of the function generator.

p1656[0].0...3 Activates current setpoint filter

Data type: Unsigned16 **Visible in:** Extended display
Read permission: Read drive data or acknowledge messages
Write permission: Edit device configuration or drive applications
Can be changed in the operating state: Operation
Parameter group: Current setpoint filter, Supplementary closed-loop control
Unit: -

Min:	Max:	Factory setting:
-	-	0001 bin

Description: Setting for activating/deactivating the current setpoint filter.

Bit array:

Bit	Signal name	1 signal	0 signal
00	Filter 1	Active	Inactive
01	Filter 2	Active	Inactive
02	Filter 3	Active	Inactive
03	Filter 4	Active	Inactive

Dependency: The individual current setpoint filters are parameterized as of p1657.

Note
If not all of the filters are required, then the filters should be used consecutively starting from filter 1.

p1657[0] Current setpoint filter 1 type

Data type: Integer16 **Visible in:** Extended display
Read permission: Read drive data or acknowledge messages
Write permission: Edit device configuration or drive applications
Can be changed in the operating state: Operation
Parameter group: Current setpoint filter
Unit: -

Min:	Max:	Factory setting:
1	2	1

Description: Sets the current setpoint filter 1 as low pass (PT2) or general 2nd-order filter.

Value:
1: PT2 low pass
2: General 2nd order filter

Dependency: The current setpoint filter 1 is activated via p1656.0 and parameterized via p1657 ... p1661.

Note
For a general 2nd order filter, by inserting the same natural frequency in both the numerator and in the denominator, i.e. bandstop frequency, then a bandstop filter is implemented. If the numerator damping of zero is selected, the bandstop frequency is completely suppressed.
The denominator damping can be determined from the equation for the 3 dB bandwidth:
f_3dB bandwidth = 2 * D_denominator * f_bandstop frequency

p1658[0] Current setpoint filter 1 denominator natural frequency

Data type: FloatingPoint32	**Visible in:** Extended display	
Read permission:	Read drive data or acknowledge messages	
Write permission:	Edit device configuration or drive applications	
Can be changed in the operating state:	Operation	
Parameter group:	Current setpoint filter	
Unit: Hz		
Min:	**Max:**	**Factory setting:**
0.5 [Hz]	16000.0 [Hz]	1999.0 [Hz]

Description: Sets the denominator natural frequency for current setpoint filter 1 (PT2, general filter).

Dependency: The current setpoint filter 1 is activated via p1656.0 and parameterized via p1657 ... p1661.

p1659[0] Current setpoint filter 1 denominator damping

Data type: FloatingPoint32	**Visible in:** Extended display	
Read permission:	Read drive data or acknowledge messages	
Write permission:	Edit device configuration or drive applications	
Can be changed in the operating state:	Operation	
Parameter group:	Current setpoint filter	
Unit: -		
Min:	**Max:**	**Factory setting:**
0.001	10.000	0.700

Description: Sets the denominator damping for current setpoint filter 1.

Dependency: The current setpoint filter 1 is activated via p1656.0 and parameterized via p1657 ... p1661.

p1660[0] Current setpoint filter 1 numerator natural frequency

Data type: FloatingPoint32	**Visible in:** Extended display	
Read permission:	Read drive data or acknowledge messages	
Write permission:	Edit device configuration or drive applications	
Can be changed in the operating state:	Operation	
Parameter group:	Current setpoint filter	
Unit: Hz		
Min:	**Max:**	**Factory setting:**
0.5 [Hz]	16000.0 [Hz]	1999.0 [Hz]

Description: Sets the numerator natural frequency for current setpoint filter 1 (general filter).

Dependency: The current setpoint filter 1 is activated via p1656.0 and parameterized via p1657 ... p1661.

p1661[0] Current setpoint filter 1 numerator damping

Data type: FloatingPoint32	**Visible in:** Extended display
Read permission:	Read drive data or acknowledge messages
Write permission:	Edit device configuration or drive applications

Can be changed in the operating state:	Operation	
Parameter group:	Current setpoint filter	
Unit: -		
Min:	**Max:**	**Factory setting:**
0.000	10.000	0.700

Description: Sets the numerator damping for current setpoint filter 1.

Dependency: The current setpoint filter 1 is activated via p1656.0 and parameterized via p1657 ... p1661.

p1662[0] Current setpoint filter 2 type

Data type: Integer16	**Visible in:** Extended display	
Read permission:	Read drive data or acknowledge messages	
Write permission:	Edit device configuration or drive applications	
Can be changed in the operating state:	Operation	
Parameter group:	Current setpoint filter	
Unit: -		
Min:	**Max:**	**Factory setting:**
1	2	1

Description: Sets current setpoint filter 2 as lowpass filter (PT2) or general 2nd order filter.

Value:
1: PT2 low pass
2: General 2nd order filter

Dependency: Current setpoint filter 2 is activated via p1656.1 and parameterized via p1662 ... p1666.

Note
For a general 2nd order filter, by inserting the same natural frequency in both the numerator and in the denominator, i.e. bandstop frequency, then a bandstop filter is implemented. If the numerator damping of zero is selected, the bandstop frequency is completely suppressed.
The denominator damping can be determined from the equation for the 3 dB bandwidth:
f_3dB bandwidth = 2 * D_denominator * f_bandstop frequency

p1663[0] Current setpoint filter 2 denominator natural frequency

Data type: FloatingPoint32	**Visible in:** Extended display	
Read permission:	Read drive data or acknowledge messages	
Write permission:	Edit device configuration or drive applications	
Can be changed in the operating state:	Operation	
Parameter group:	Current setpoint filter	
Unit: Hz		
Min:	**Max:**	**Factory setting:**
0.5 [Hz]	16000.0 [Hz]	1999.0 [Hz]

Description: Sets the denominator natural frequency for current setpoint filter 2 (PT2, general filter).

Dependency: Current setpoint filter 2 is activated via p1656.1 and parameterized via p1662 ... p1666.

p1664[0] Current setpoint filter 2 denominator damping

Data type: FloatingPoint32	**Visible in:** Extended display
Read permission:	Read drive data or acknowledge messages
Write permission:	Edit device configuration or drive applications
Can be changed in the operating state:	Operation

Parameter group:	Current setpoint filter	
Unit: -		
Min:	**Max:**	**Factory setting:**
0.001	10.000	0.700

Description: Sets the denominator damping for current setpoint filter 2.

Dependency: Current setpoint filter 2 is activated via p1656.1 and parameterized via p1662 ... p1666.

p1665[0] Current setpoint filter 2 numerator natural frequency

Data type: FloatingPoint32	**Visible in:** Extended display	
Read permission:	Read drive data or acknowledge messages	
Write permission:	Edit device configuration or drive applications	
Can be changed in the operating state:	Operation	
Parameter group:	Current setpoint filter	
Unit: Hz		
Min:	**Max:**	**Factory setting:**
0.5 [Hz]	16000.0 [Hz]	1999.0 [Hz]

Description: Sets the numerator natural frequency for current setpoint filter 2 (general filter).

Dependency: Current setpoint filter 2 is activated via p1656.1 and parameterized via p1662 ... p1666.

p1666[0] Current setpoint filter 2 numerator damping

Data type: FloatingPoint32	**Visible in:** Extended display	
Read permission:	Read drive data or acknowledge messages	
Write permission:	Edit device configuration or drive applications	
Can be changed in the operating state:	Operation	
Parameter group:	Current setpoint filter	
Unit: -		
Min:	**Max:**	**Factory setting:**
0.000	10.000	0.700

Description: Sets the numerator damping for current setpoint filter 2.

Dependency: Current setpoint filter 2 is activated via p1656.1 and parameterized via p1662 ... p1666.

p1667[0] Current setpoint filter 3 type

Data type: Integer16	**Visible in:** Extended display	
Read permission:	Read drive data or acknowledge messages	
Write permission:	Edit device configuration or drive applications	
Can be changed in the operating state:	Operation	
Parameter group:	Current setpoint filter	
Unit: -		
Min:	**Max:**	**Factory setting:**
1	2	1

Description: Sets current setpoint filter 3 as lowpass filter (PT2) or general 2nd order filter.

Value:
1: PT2 low pass
2: General 2nd order filter

Dependency: Current setpoint filter 3 is activated via p1656.2 and parameterized via p1667 ... p1671.

p1668[0] Current setpoint filter 3 denominator natural frequency

Data type: FloatingPoint32 **Visible in:** Extended display
Read permission: Read drive data or acknowledge messages
Write permission: Edit device configuration or drive applications
Can be changed in the operating state: Operation
Parameter group: Current setpoint filter
Unit: Hz

Min:	Max:	Factory setting:
0.5 [Hz]	16000.0 [Hz]	1999.0 [Hz]

Description: Sets the denominator natural frequency for current setpoint filter 3 (PT2, general filter).
Dependency: Current setpoint filter 3 is activated via p1656.2 and parameterized via p1667 ... p1671.

p1669[0] Current setpoint filter 3 denominator damping

Data type: FloatingPoint32 **Visible in:** Extended display
Read permission: Read drive data or acknowledge messages
Write permission: Edit device configuration or drive applications
Can be changed in the operating state: Operation
Parameter group: Current setpoint filter
Unit: -

Min:	Max:	Factory setting:
0.001	10.000	0.700

Description: Sets the denominator damping for current setpoint filter 3.
Dependency: Current setpoint filter 3 is activated via p1656.2 and parameterized via p1667 ... p1671.

p1670[0] Current setpoint filter 3 numerator natural frequency

Data type: FloatingPoint32 **Visible in:** Extended display
Read permission: Read drive data or acknowledge messages
Write permission: Edit device configuration or drive applications
Can be changed in the operating state: Operation
Parameter group: Current setpoint filter
Unit: Hz

Min:	Max:	Factory setting:
0.5 [Hz]	16000.0 [Hz]	1999.0 [Hz]

Description: Sets the numerator natural frequency for current setpoint filter 3 (general filter).
Dependency: Current setpoint filter 3 is activated via p1656.2 and parameterized via p1667 ... p1671.

p1671[0] Current setpoint filter 3 numerator damping

Data type: FloatingPoint32 **Visible in:** Extended display
Read permission: Read drive data or acknowledge messages
Write permission: Edit device configuration or drive applications
Can be changed in the operating state: Operation
Parameter group: Current setpoint filter
Unit: -

Min:	Max:	Factory setting:
0.000	10.000	0.700

Description: Sets the numerator damping for current setpoint filter 3.
Dependency: Current setpoint filter 3 is activated via p1656.2 and parameterized via p1667 ... p1671.

p1672[0] Current setpoint filter 4 type

Data type: Integer16	**Visible in:** Extended display	
Read permission:	Read drive data or acknowledge messages	
Write permission:	Edit device configuration or drive applications	
Can be changed in the operating state:	Operation	
Parameter group:	Current setpoint filter	
Unit: -		
Min:	**Max:**	**Factory setting:**
1	2	1

Description: Sets current setpoint filter 4 as lowpass filter (PT2) or general 2nd order filter.
Value:
1: PT2 low pass
2: General 2nd order filter
Dependency: Current setpoint filter 4 is activated via p1656.3 and parameterized via p1672 ... p1676.

p1673[0] Current setpoint filter 4 denominator natural frequency

Data type: FloatingPoint32	**Visible in:** Extended display	
Read permission:	Read drive data or acknowledge messages	
Write permission:	Edit device configuration or drive applications	
Can be changed in the operating state:	Operation	
Parameter group:	Current setpoint filter	
Unit: Hz		
Min:	**Max:**	**Factory setting:**
0.5 [Hz]	16000.0 [Hz]	1999.0 [Hz]

Description: Sets the denominator natural frequency for current setpoint filter 4 (PT2, general filter).
Dependency: Current setpoint filter 4 is activated via p1656.3 and parameterized via p1672 ... p1676.

p1674[0] Current setpoint filter 4 denominator damping

Data type: FloatingPoint32	**Visible in:** Extended display	
Read permission:	Read drive data or acknowledge messages	
Write permission:	Edit device configuration or drive applications	
Can be changed in the operating state:	Operation	
Parameter group:	Current setpoint filter	
Unit: -		
Min:	**Max:**	**Factory setting:**
0.001	10.000	0.700

Description: Sets the denominator damping for current setpoint filter 4.
Dependency: Current setpoint filter 4 is activated via p1656.3 and parameterized via p1672 ... p1676.

p1675[0] Current setpoint filter 4 numerator natural frequency

Data type: FloatingPoint32	**Visible in:** Extended display
Read permission:	Read drive data or acknowledge messages
Write permission:	Edit device configuration or drive applications

Can be changed in the operating state:	Operation	
Parameter group:	Current setpoint filter	
Unit: Hz		
Min:	**Max:**	**Factory setting:**
0.5 [Hz]	16000.0 [Hz]	1999.0 [Hz]

Description: Sets the numerator natural frequency for current setpoint filter 4 (general filter).

Dependency: Current setpoint filter 4 is activated via p1656.3 and parameterized via p1672 ... p1676.

p1676[0] Current setpoint filter 4 numerator damping

Data type: FloatingPoint32	**Visible in:** Extended display	
Read permission:	Read drive data or acknowledge messages	
Write permission:	Edit device configuration or drive applications	
Can be changed in the operating state:	Operation	
Parameter group:	Current setpoint filter	
Unit: -		
Min:	**Max:**	**Factory setting:**
0.000	10.000	0.700

Description: Sets the numerator damping for current setpoint filter 4.

Dependency: Current setpoint filter 4 is activated via p1656.3 and parameterized via p1672 ... p1676.

p1703[0] Isq current controller precontrol scaling

Data type: FloatingPoint32	**Visible in:** Extended display	
Read permission:	Read drive data or acknowledge messages	
Write permission:	Edit device configuration or drive applications	
Can be changed in the operating state:	Operation	
Parameter group:	Current controller	
Unit: %		
Min:	**Max:**	**Factory setting:**
0.0 [%]	200.0 [%]	0.0 [%]

Description: Sets the scaling of the dynamic current controller precontrol for the torque/force-generating current component Isq.

p1821[0] Direction of rotation

Data type: Integer16	**Visible in:** Standard display	
Read permission:	Read drive data or acknowledge messages	
Write permission:	Edit device configuration or drive applications	
Can be changed in the operating state:	Commissioning	
Parameter group:	Motor data	
Unit: -		
Min:	**Max:**	**Factory setting:**
0	1	0

Description: Setting to change the direction of rotation.

If the parameter is changed, it reverses the direction of rotation of the motor and the encoder actual value without changing the setpoint.

Value:
0: Clockwise
1: Counterclockwise

Dependency: See also: F07434

NOTICE
After changing parameter p1821, the direction of rotation is not automatically adapted in the safety area.

p2000 Reference speed

Data type: FloatingPoint32 **Visible in:** Standard display
Read permission: Read drive data or acknowledge messages
Write permission: Edit device configuration or drive applications
Can be changed in the operating state: Ready for operation
Parameter group: Reference variables
Unit: rpm

Min:	Max:	Factory setting:
6.00 [rpm]	210000.00 [rpm]	3000.00 [rpm]

Description: Sets the reference quantity for the speed values.
All speeds specified as relative values refer to this reference quantity.
The reference quantity corresponds to 100% or 4000 hex (word) or 4000 0000 hex (double word).

Dependency: See also: p2003

p2001 Reference voltage

Data type: FloatingPoint32 **Visible in:** Standard display
Read permission: Read drive data or acknowledge messages
Write permission: Edit device configuration or drive applications
Can be changed in the operating state: Ready for operation
Parameter group: Reference variables
Unit: Vrms

Min:	Max:	Factory setting:
10 [Vrms]	100000 [Vrms]	1000 [Vrms]

Description: Sets the reference quantity for the voltage values. All voltages specified as relative value are referred to this reference quantity. The reference quantity corresponds to 100% or 4000 hex (word) or 4000 0000 hex (double word).

p2002 Reference current

Data type: FloatingPoint32 **Visible in:** Extended display
Read permission: Read drive data or acknowledge messages
Write permission: Edit device configuration or drive applications
Can be changed in the operating state: Ready for operation
Parameter group: Reference variables
Unit: Arms

Min:	Max:	Factory setting:
0.10 [Arms]	100000.00 [Arms]	100.00 [Arms]

Description: Sets the reference quantity for currents.
All currents specified as relative value are referred to this reference quantity.
The reference quantity corresponds to 100% or 4000 hex (word) or 4000 0000 hex (double word).

Note
Default value is 2 * p0305 or the motor current limit.

p2003 Reference torque

Data type: FloatingPoint32 **Visible in:** Standard display

Read permission:	Read drive data or acknowledge messages	
Write permission:	Edit device configuration or drive applications	
Can be changed in the operating state:	Ready for operation	
Parameter group:	Reference variables	
Unit: Nm		
Min:	**Max:**	**Factory setting:**
0.01 [Nm]	2e+07 [Nm]	1.00 [Nm]

Description: Sets the reference quantity for the torque values.
All torques specified as relative value are referred to this reference quantity.
The reference quantity corresponds to 100% or 4000 hex (word) or 4000 0000 hex (double word).

p2004 Reference power

Data type: FloatingPoint32	**Visible in:** Extended display	
Read permission:	Read drive data or acknowledge messages	
Write permission:	Edit device configuration or drive applications	
Can be changed in the operating state:	Ready for operation	
Parameter group:	Reference variables	
Unit: kW		
Min:	**Max:**	**Factory setting:**
0.01 [kW]	20000.00 [kW]	20000.00 [kW]

Description: Sets the reference quantity for the power values. All power ratings specified as relative value are referred to this reference quantity. The reference quantity corresponds to 100% or 4000 hex (word) or 4000 0000 hex (double word).

Dependency: See also: p2000, p2001, p2002, p2003

r2029[0...7] Fieldbus interface error statistics

Variant:	S200 PTI
Available for module:	Communication Module Modbus RTU/BACnet MS TP
Data type: Unsigned32	**Visible in:** Standard display
Read permission:	Read drive data or acknowledge messages
Parameter group:	Configuration
Unit: -	

Description: Displays the receive errors at the field bus interface (RS485).

Index:
[0] = Number of error-free telegrams
[1] = Number of rejected telegrams
[2] = Number of framing errors
[3] = Number of overrun errors
[4] = Number of parity errors
[5] = Number of starting character errors
[6] = Number of checksum errors
[7] = Number of length errors

r2043.0...2 PROFIdrive PZD state

Variant:	S200 PTI
Data type: Unsigned8	**Visible in:** Extended display
Read permission:	Read drive data or acknowledge messages
Parameter group:	Configuration
Unit: -	

Description: Displays the PROFIdrive PZD state.

Bit array:

Bit	Signal name	1 signal	0 signal
00	Setpoint failure	Yes	No
01	Isochronous operation active	Yes	No
02	Fieldbus running	Yes	No

Note
When using the "setpoint failure" signal, the bus can be monitored and an application-specific response triggered when the setpoint fails.

r2050[0...31].0...15 PROFIdrive PZD receive word

Variant: S200 PTI
Data type: Unsigned16 **Visible in:** Standard display
Read permission: Read drive data or acknowledge messages
Parameter group: Receive direction
Unit: -

Description: Displays the PZD (setpoints) in the word format received from the fieldbus controller.

Index:
[0] = PZD 1
[1] = PZD 2
[2] = PZD 3
[3] = PZD 4
[4] = PZD 5
[5] = PZD 6
[6] = PZD 7
[7] = PZD 8
[8] = PZD 9
[9] = PZD 10
[10] = PZD 11
[11] = PZD 12
[12] = PZD 13
[13] = PZD 14
[14] = PZD 15
[15] = PZD 16
[16] = PZD 17
[17] = PZD 18
[18] = PZD 19
[19] = PZD 20
[20] = PZD 21
[21] = PZD 22
[22] = PZD 23
[23] = PZD 24
[24] = PZD 25
[25] = PZD 26
[26] = PZD 27
[27] = PZD 28
[28] = PZD 29
[29] = PZD 30
[30] = PZD 31
[31] = PZD 32

Bit array:

Bit	Signal name	1 signal	0 signal
00	Bit 0	On	Off
01	Bit 1	On	Off
02	Bit 2	On	Off

03	Bit 3	On	Off
04	Bit 4	On	Off
05	Bit 5	On	Off
06	Bit 6	On	Off
07	Bit 7	On	Off
08	Bit 8	On	Off
09	Bit 9	On	Off
10	Bit 10	On	Off
11	Bit 11	On	Off
12	Bit 12	On	Off
13	Bit 13	On	Off
14	Bit 14	On	Off
15	Bit 15	On	Off

Dependency: See also: r2060

c2053[0...31] PROFIdrive PZD send word

Variant: S200 PTI

Data type: Unsigned16 **Visible in:** Standard display

Read permission: Read drive data or acknowledge messages

Write permission: Edit device configuration or drive applications

Parameter group: Send direction

Unit: -

Description: Displays the PZD (actual values) in the word format that are sent to the fieldbus controller.

Index:
[0] = PZD 1
[1] = PZD 2
[2] = PZD 3
[3] = PZD 4
[4] = PZD 5
[5] = PZD 6
[6] = PZD 7
[7] = PZD 8
[8] = PZD 9
[9] = PZD 10
[10] = PZD 11
[11] = PZD 12
[12] = PZD 13
[13] = PZD 14
[14] = PZD 15
[15] = PZD 16
[16] = PZD 17
[17] = PZD 18
[18] = PZD 19
[19] = PZD 20
[20] = PZD 21
[21] = PZD 22
[22] = PZD 23
[23] = PZD 24
[24] = PZD 25
[25] = PZD 26
[26] = PZD 27
[27] = PZD 28
[28] = PZD 29
[29] = PZD 30
[30] = PZD 31
[31] = PZD 32

Dependency: See also: c2063

r2060[0...30] PROFIdrive PZD receive double word

Variant: S200 PTI
Data type: Integer32 **Visible in:** Standard display
Read permission: Read drive data or acknowledge messages
Parameter group: Receive direction
Unit: -

Description: Displays the PZD (setpoints) in the double word format received from the fieldbus controller.

Index:
[0] = PZD 1 + 2
[1] = PZD 2 + 3
[2] = PZD 3 + 4
[3] = PZD 4 + 5
[4] = PZD 5 + 6
[5] = PZD 6 + 7
[6] = PZD 7 + 8
[7] = PZD 8 + 9
[8] = PZD 9 + 10
[9] = PZD 10 + 11
[10] = PZD 11 + 12
[11] = PZD 12 + 13
[12] = PZD 13 + 14
[13] = PZD 14 + 15
[14] = PZD 15 + 16
[15] = PZD 16 + 17
[16] = PZD 17 + 18
[17] = PZD 18 + 19
[18] = PZD 19 + 20
[19] = PZD 20 + 21
[20] = PZD 21 + 22
[21] = PZD 22 + 23
[22] = PZD 23 + 24
[23] = PZD 24 + 25
[24] = PZD 25 + 26
[25] = PZD 26 + 27
[26] = PZD 27 + 28
[27] = PZD 28 + 29
[28] = PZD 29 + 30
[29] = PZD 30 + 31
[30] = PZD 31 + 32

Dependency: See also: r2050

c2063[0...30] PROFIdrive PZD send double word

Variant: S200 PTI
Data type: Unsigned32 **Visible in:** Standard display
Read permission: Read drive data or acknowledge messages
Write permission: Edit device configuration or drive applications
Parameter group: Send direction
Unit: -

Description: Displays the PZD (actual values) in the double word format that are sent to the fieldbus controller.

Index:
[0] = PZD 1 + 2
[1] = PZD 2 + 3
[2] = PZD 3 + 4
[3] = PZD 4 + 5
[4] = PZD 5 + 6
[5] = PZD 6 + 7
[6] = PZD 7 + 8
[7] = PZD 8 + 9
[8] = PZD 9 + 10
[9] = PZD 10 + 11
[10] = PZD 11 + 12
[11] = PZD 12 + 13
[12] = PZD 13 + 14
[13] = PZD 14 + 15
[14] = PZD 15 + 16
[15] = PZD 16 + 17
[16] = PZD 17 + 18
[17] = PZD 18 + 19
[18] = PZD 19 + 20
[19] = PZD 20 + 21
[20] = PZD 21 + 22
[21] = PZD 22 + 23
[22] = PZD 23 + 24
[23] = PZD 24 + 25
[24] = PZD 25 + 26
[25] = PZD 26 + 27
[26] = PZD 27 + 28
[27] = PZD 28 + 29
[28] = PZD 29 + 30
[29] = PZD 30 + 31
[30] = PZD 31 + 32

Dependency: See also: c2053

c2104[0] 2nd acknowledge faults

Data type: Unsigned8 **Visible in:** Extended display
Read permission: Read drive data or acknowledge messages
Write permission: Edit device configuration or drive applications
Parameter group: Faults / alarms
Unit: -

Description: Signal 2 to acknowledge faults.

Note
A fault acknowledgment is triggered with a 0/1 signal.

c2106[0] External fault 1

Data type: Unsigned8 **Visible in:** Extended display
Read permission: Read drive data or acknowledge messages
Write permission: Edit device configuration or drive applications
Parameter group: Faults / alarms
Unit: -

Description: Signal for external fault 1.

Dependency: See also: F07860

Note
An external fault is triggered with a 1/0 edge.

r2109[0...63] Fault time removed in milliseconds

Data type: Unsigned32 **Visible in:** Extended display
Read permission: Read drive data or acknowledge messages
Parameter group: Faults / alarms
Unit: ms

Description: Displays the system runtime in milliseconds when the fault was removed.

Dependency: See also: r0945, r0947, r0948, r0949, r2114, r2130, r2133, r2136, r3122

NOTICE
The time comprises r2136 (days) and r2109 (milliseconds).

Note
The buffer parameters are cyclically updated in the background (refer to status signal in r2139).
The structure of the fault buffer and the assignment of the indices is shown in r0945.

r2111 Alarm counter

Data type: Unsigned16 **Visible in:** Extended display
Read permission: Read drive data or acknowledge messages
Parameter group: Faults / alarms
Unit: -

Description: Number of alarms that have occurred.

Dependency: See also: r2122, r2123, r2124, r2125

Note
The parameter is reset to 0 at POWER ON.

r2114[0...1] System runtime total

Data type: Unsigned32 **Visible in:** Standard display
Read permission: Read drive data or acknowledge messages
Parameter group: Diagnostics general
Unit: -

Description: Displays the total system runtime of the converter.
The time comprises r2114[0] (milliseconds) and r2114[1] (days).
After r2114[0] has reached a value of 86.400.000 ms (24 hours) this value is reset and r2114[1] is incremented.

Index: [0] = Milliseconds
[1] = Days

Note
The counter values are saved when the power supply is switched off.
After the converter is switched on, the counter continues to run with the last value that was saved.

p2118[0...19] Change message type message number

Data type: Unsigned16 **Visible in:** Extended display
Read permission: Read drive data or acknowledge messages
Write permission: Edit device configuration or drive applications
Can be changed in the operating state: Operation

Parameter group: Faults / alarms
Unit: -

Min:	Max:	Factory setting:
0	65535	0

Description: Selects faults or alarms for which the message type should be changed.

Dependency: Selects the fault or alarm selection and sets the required type of message realized under the same index.
See also: p2119

Note
Re-parameterization is also possible if a message is present. The change only becomes effective after the message has gone.

p2119[0...19] Change message type type

Data type: Integer16 **Visible in:** Extended display
Read permission: Read drive data or acknowledge messages
Write permission: Edit device configuration or drive applications
Can be changed in the operating state: Operation
Parameter group: Faults / alarms
Unit: -

Min:	Max:	Factory setting:
1	3	1

Description: Sets the message type for the selected fault or alarm.

Value:
1: Fault (F)
2: Alarm (A)
3: No message (N)

Dependency: Selects the fault or alarm selection and sets the required type of message realized under the same index.
See also: p2118

Note
Re-parameterization is also possible if a message is present. The change only becomes effective after the message has gone.
The message type can only be changed for messages with the appropriate identification (exception, value = 0).
Example:
F12345(A) --> Fault F12345 can be changed to alarm A12345.

r2121 Counter alarm buffer changes

Data type: Unsigned16 **Visible in:** Extended display
Read permission: Read drive data or acknowledge messages
Parameter group: Faults / alarms
Unit: -

Description: This counter is incremented every time the alarm buffer changes.

Dependency: See also: r2122, r2123, r2124, r2125

r2122[0...63] Alarm number

Data type: Unsigned16 **Visible in:** Extended display
Read permission: Read drive data or acknowledge messages
Parameter group: Faults / alarms
Unit: -

Description: Displays the numbers of the last 64 alarms.

Dependency: See also: r2123, r2124, r2125, r2134, r2145, r2146, r3123

NOTICE
The properties of the alarm buffer should be taken from the corresponding product documentation.

Note
The buffer parameters are cyclically updated in the background.
Alarm buffer structure (general principle):
Currently active alarms (not gone):
r2122[0], r2124[0], r2123[0], r2125[0] --> alarm 1 (the oldest)
. . .
r2122[7], r2124[7], r2123[7], r2125[7] --> Alarm 8 (the latest)

History of alarms that have gone:
r2122[8], r2124[8], r2123[8], r2125[8] --> Alarm 1 (the latest)
. . .
r2122[63], r2124[63], r2123[63], r2125[63] --> alarm 56 (the oldest)

r2123[0...63] Alarm time received in milliseconds

Data type: Unsigned32 **Visible in:** Extended display
Read permission: Read drive data or acknowledge messages
Parameter group: Faults / alarms
Unit: ms

Description: Displays the system runtime in milliseconds when the alarm occurred.

Dependency: See also: r2114, r2122, r2124, r2125, r2134, r2145, r2146, r3123

NOTICE
The time comprises r2145 (days) and r2123 (milliseconds).

Note
The buffer parameters are cyclically updated in the background (refer to status signal in r2139).
The structure of the alarm buffer and the assignment of the indices is shown in r2122.

r2124[0...63] Alarm value

Data type: Integer32 **Visible in:** Extended display
Read permission: Read drive data or acknowledge messages
Parameter group: Faults / alarms
Unit: -

Description: Displays additional information about the active alarm (as integer number).

Dependency: See also: r2122, r2123, r2125, r2134, r2145, r2146, r3123

Note
The buffer parameters are cyclically updated in the background (refer to status signal in r2139).
The structure of the alarm buffer and the assignment of the indices is shown in r2122.

r2125[0...63] Alarm time removed in milliseconds

Data type: Unsigned32 **Visible in:** Extended display
Read permission: Read drive data or acknowledge messages
Parameter group: Faults / alarms
Unit: ms

Description: Displays the system runtime in milliseconds when the alarm was removed.

Dependency: See also: r2114, r2122, r2123, r2124, r2134, r2145, r2146, r3123

NOTICE
The time comprises r2146 (days) and r2125 (milliseconds).

Note
The buffer parameters are cyclically updated in the background (refer to status signal in r2139).
The structure of the alarm buffer and the assignment of the indices is shown in r2122.

r2130[0...63] Fault time received in days

Data type: Unsigned16 **Visible in:** Extended display
Read permission: Read drive data or acknowledge messages
Parameter group: Faults / alarms
Unit: -

Description: Displays the system runtime in days when the fault occurred.

Dependency: See also: r0945, r0947, r0948, r0949, r2109, r2114, r2133, r2136, r3122

NOTICE
The time comprises r2130 (days) and r0948 (milliseconds).

Note
The buffer parameters are cyclically updated in the background (refer to status signal in r2139).

r2131 Actual fault code

Data type: Unsigned16 **Visible in:** Extended display
Read permission: Read drive data or acknowledge messages
Parameter group: Faults / alarms
Unit: -

Description: Displays the code of the oldest active fault.

Note
0: No fault present.

r2132 Actual alarm code

Data type: Unsigned16 **Visible in:** Extended display
Read permission: Read drive data or acknowledge messages
Parameter group: Faults / alarms
Unit: -

Description: Displays the code of the last alarm that occurred.

Note
0: No alarm present.

r2133[0...63] Fault value for float values

Data type: FloatingPoint32 **Visible in:** Extended display
Read permission: Read drive data or acknowledge messages
Parameter group: Faults / alarms
Unit: -

Description: Displays additional information about the fault that occurred for float values.

Dependency: See also: r0945, r0947, r0948, r0949, r2109, r2130, r2136

Note
The buffer parameters are cyclically updated in the background (refer to status signal in r2139).

r2134[0...63] Alarm value for float values

Data type: FloatingPoint32 **Visible in:** Extended display
Read permission: Read drive data or acknowledge messages

Parameter group: Faults / alarms
Unit: -

Description: Displays additional information about the active alarm for float values.

Dependency: See also: r2122, r2123, r2124, r2125, r2145, r2146, r3123

Note
The buffer parameters are cyclically updated in the background (refer to status signal in r2139).

r2136[0...63] Fault time removed in days

Data type: Unsigned16 **Visible in:** Extended display
Read permission: Read drive data or acknowledge messages
Parameter group: Faults / alarms
Unit: -

Description: Displays the system runtime in days when the fault was removed.

Dependency: See also: r0945, r0947, r0948, r0949, r2109, r2114, r2130, r2133, r3122

NOTICE
The time comprises r2136 (days) and r2109 (milliseconds).

Note
The buffer parameters are cyclically updated in the background (refer to status signal in r2139).

r2139.0...15 Status word faults/alarms 1

Data type: Unsigned16 **Visible in:** Extended display
Read permission: Read drive data or acknowledge messages
Parameter group: Faults / alarms
Unit: -

Description: Displays status word 1 of faults and alarms.

Bit array:

Bit	Signal name	1 signal	0 signal
00	Being acknowledged	Yes	No
01	Acknowledgment required	Yes	No
03	Fault present	Yes	No
05	Safety message present	Yes	No
07	Alarm present	Yes	No
11	Alarm class bit 0	High	Low
12	Alarm class bit 1	High	Low
13	Maintenance required	Yes	No
14	Maintenance urgently required	Yes	No
15	Fault gone/can be acknowledged	Yes	No

Note
For bit 03, 05, 07:
These bits are set if at least one fault/alarm or safety message occurs. The entry in the fault/alarm buffer or safety message buffer is delayed. This is the reason that the fault/alarm buffer or safety message buffer should only be read if, after "Fault active", "Alarm active" or "Safety message active" occurs, a change is also identified in the buffer (r0944, r2121, r60044).
For bits 11, 12:
These status bits are used for the classification of internal alarm classes and are intended for diagnostic purposes only on certain automation systems with integrated SINAMICS functionality.

r2145[0...63] Alarm time received in days

Data type: Unsigned16 **Visible in:** Extended display
Read permission: Read drive data or acknowledge messages

Parameter group: Faults / alarms

Unit: -

Description: Displays the system runtime in days when the alarm occurred.

Dependency: See also: r2114, r2122, r2123, r2124, r2125, r2134, r2146, r3123

NOTICE
The time comprises r2145 (days) and r2123 (milliseconds).

Note
The buffer parameters are cyclically updated in the background (refer to status signal in r2139).

r2146[0...63] Alarm time cleared in days

Data type: Unsigned16 **Visible in:** Extended display

Read permission: Read drive data or acknowledge messages

Parameter group: Faults / alarms

Unit: -

Description: Displays the system runtime in days when the alarm was cleared.

Dependency: See also: r2114, r2122, r2123, r2124, r2125, r2134, r2145, r3123

NOTICE
The time comprises r2146 (days) and r2125 (milliseconds).

Note
The buffer parameters are cyclically updated in the background (refer to status signal in r2139).

p2149[0].16 Monitoring configuration

Variant: S200 Basic PTI

Data type: Unsigned32 **Visible in:** Extended display

Read permission: Read drive data or acknowledge messages

Write permission: Edit device configuration or drive applications

Can be changed in the operating state: Operation

Parameter group: Speed messages, Load torque monitoring

Unit: -

Min:	Max:	Factory setting:
-	-	0000 0000 0000 0000 0000 0000 0000 0000 bin

Description: Sets the configuration for messages and monitoring functions.

Bit array:

Bit	Signal name	1 signal	0 signal
16	Reserved	Yes	No

p2149[0].16 Monitoring configuration

Variant: S200 PTI

Data type: Unsigned32 **Visible in:** Extended display

Read permission: Read drive data or acknowledge messages

Write permission: Edit device configuration or drive applications

Can be changed in the operating state: Operation

Parameter group: Speed messages, Load torque monitoring

Unit: -

Min:	Max:	Factory setting:
-	-	0000 0000 0000 0001 0000 0000 0000 0000 bin

Description: Sets the configuration for messages and monitoring functions.

Bit array:

Bit	Signal name	1 signal	0 signal
16	Line voltage failure detection	Yes	No

Note
For bit 16:
When the bit is set, the line voltage failure detection function is activated

p2153[0] Speed actual value filter time constant

Data type: FloatingPoint32 **Visible in:** Extended display
Read permission: Read drive data or acknowledge messages
Write permission: Edit device configuration or drive applications
Can be changed in the operating state: Operation
Parameter group: Speed messages
Unit: ms

Min:	Max:	Factory setting:
0 [ms]	1000000 [ms]	0 [ms]

Description: Sets the time constant of the PT1 element to smooth the speed / velocity actual value.
The smoothed actual speed/velocity is compared with the threshold values and is only used for messages and signals.

p2161[0] Speed threshold 3

Data type: FloatingPoint32 **Visible in:** Extended display
Read permission: Read drive data or acknowledge messages
Write permission: Edit device configuration or drive applications
Can be changed in the operating state: Operation
Parameter group: Speed messages
Unit: rpm

Min:	Max:	Factory setting:
0.00 [rpm]	210000.00 [rpm]	5.00 [rpm]

Description: Sets the speed threshold value for signal "|n_act| < speed threshold 3".
Dependency: See also: r2199

p2162[0] Hysteresis speed n_act > n_max

Data type: FloatingPoint32 **Visible in:** Extended display
Read permission: Read drive data or acknowledge messages
Write permission: Edit device configuration or drive applications
Can be changed in the operating state: Operation
Parameter group: Speed messages
Unit: rpm

Min:	Max:	Factory setting:
0.00 [rpm]	60000.00 [rpm]	0.00 [rpm]

Description: Sets the hysteresis speed (bandwidth) for signal "n_act > n_max".

NOTICE
For p0322 = 0, the following applies: p2162 <= 0.1 * p0311 For p0322 > 0, the following applies: p2162 <= 1.02 * p0322 - p1082 If one of the conditions is violated, p2162 is appropriately and automatically reduced when exiting the commissioning mode.

Note
For a negative speed limit, the hysteresis is effective below the limit value and for a positive speed limit, above the limit value.
If significant overshoot occurs in the maximum speed range (e.g. due to load shedding), you are advised to increase the dynamic response of the speed controller (if possible). If this is insufficient, the hysteresis p2162 can only be increased by more than 10% of the rated speed when the maximum speed (p0322) of the motor is sufficiently greater than the speed limit p1082.

p2175[0] Motor blocked speed threshold

Data type: FloatingPoint32 **Visible in:** Extended display
Read permission: Read drive data or acknowledge messages
Write permission: Edit device configuration or drive applications
Can be changed in the operating state: Operation
Parameter group: Speed messages
Unit: rpm

Min:	Max:	Factory setting:
0.00 [rpm]	210000.00 [rpm]	120.00 [rpm]

Description: Sets the speed threshold for message "Motor blocked".
Monitoring is deactivated with p2175 = 0.

Dependency: See also: p2177
See also: F07900

Note
If the motor speed is less than the threshold value set in p2175 - and the motor is operated for longer than 200 ms at the torque limit - then the motor is shut down and a fault is output.

p2177[0] Motor blocked delay time

Data type: FloatingPoint32 **Visible in:** Extended display
Read permission: Read drive data or acknowledge messages
Write permission: Edit device configuration or drive applications
Can be changed in the operating state: Operation
Parameter group: Speed messages
Unit: s

Min:	Max:	Factory setting:
0.000 [s]	65.000 [s]	1.000 [s]

Description: Sets the delay time for the message "Motor blocked".

Dependency: See also: p2175
See also: F07900

r2199.0...11 Status word monitoring 3

Data type: Unsigned16 **Visible in:** Extended display
Read permission: Read drive data or acknowledge messages
Parameter group: Speed messages, Control/status words
Unit: -

Description: Displays the third status word of the monitoring functions.

Bit array:

Bit	Signal name	1 signal	0 signal
00	|n_act| < p2161	Yes	No
01	f or n comparison value reached or exceeded	Yes	No
04	Speed setpoint - actual value deviation in tolerance t_on	Yes	No
05	Ramp-up/ramp-down completed	Yes	No
11	Torque utilization < torque threshold value 2	Yes	No

Note
For bit 00:
The speed threshold value 3 is set in p2161.
For bit 01:
The comparison value is permanently set to 5 rpm.
For bit 11:
Torque threshold value 2 is permanently set to 90 %.

p2496 LR measurement unit length physical

Variant: S200 PTI
Available when function is active: Position control
Values for: Basic positioner for rotary motion
Data type: Integer16 **Visible in:** Standard display
Read permission: Read drive data or acknowledge messages
Write permission: Edit device configuration or drive applications
Can be changed in the operating state: Commissioning
Parameter group: Position control, Basic parameters / mechanical system
Unit: -

Min:	Max:	Factory setting:
0	10	10

Description: Sets the physical measurement unit (MU) for the length.

Value:
0: LU (user-defined)
10: °

Note
This parameter is only of significance for visualization (e.g. using the commissioning tool).
Internally in the drive, the neutral length unit (LU) without dimensions is used for calculations.
MU: measurement unit

p2496 LR measurement unit length physical

Variant: S200 PTI
Available when function is active: Position control
Data type: Integer16 **Visible in:** Standard display
Read permission: Read drive data or acknowledge messages
Write permission: Edit device configuration or drive applications
Can be changed in the operating state: Commissioning
Parameter group: Position control, Basic parameters / mechanical system
Unit: -

Min:	Max:	Factory setting:
0	8	0

Description: Sets the physical measurement unit (MU) for the length.

Value:

0: LU (user-defined)
1: km
2: m
3: mm
4: µm
5: nm
6: in
7: ft
8: mi

Note
This parameter is only of significance for visualization (e.g. using the commissioning tool).
Internally in the drive, the neutral length unit (LU) without dimensions is used for calculations.
MU: measurement unit

p2497 LR measurement unit velocity physical

Variant:	S200 PTI	
Available when function is active:	Position control	
Values for:	Basic positioner for rotary motion	
Data type: Integer16	**Visible in:** Standard display	
Read permission:	Read drive data or acknowledge messages	
Write permission:	Edit device configuration or drive applications	
Can be changed in the operating state:	Commissioning	
Parameter group:	Position control, Basic parameters / mechanical system	
Unit: -		
Min:	**Max:**	**Factory setting:**
0	18	18

Description: Sets the physical measurement unit (MU) for velocities.

Value:

0: 1000LU/min (user-defined)
18: °/s

Note
MU: measurement unit

p2497 LR measurement unit velocity physical

Variant:	S200 PTI	
Available when function is active:	Position control	
Data type: Integer16	**Visible in:** Standard display	
Read permission:	Read drive data or acknowledge messages	
Write permission:	Edit device configuration or drive applications	
Can be changed in the operating state:	Commissioning	
Parameter group:	Position control, Basic parameters / mechanical system	
Unit: -		
Min:	**Max:**	**Factory setting:**
0	15	0

Description: Sets the physical measurement unit (MU) for velocities.

Value:

0:	1000LU/min (user-defined)
1:	km/h
2:	km/min
3:	m/h
4:	m/min
5:	m/s
6:	mm/h
7:	mm/min
8:	mm/s
11:	in/min
12:	in/s
13:	ft/min
14:	ft/s
15:	mi/h

Note
MU: measurement unit

p2498 LR measurement unit acceleration physical

Variant: S200 PTI

Available when function is active: Position control

Values for: Basic positioner for rotary motion

Data type: Integer16 **Visible in:** Standard display

Read permission: Read drive data or acknowledge messages

Write permission: Edit device configuration or drive applications

Can be changed in the operating state: Commissioning

Parameter group: Position control, Basic parameters / mechanical system

Unit: -

Min:	Max:	Factory setting:
0	18	18

Description: Sets the physical measurement unit (MU) for acceleration.

Value:

0:	1000LU/s² (user-defined)
18:	°/s²

Note
MU: measurement unit

p2498 LR measurement unit acceleration physical

Variant: S200 PTI

Available when function is active: Position control

Data type: Integer16 **Visible in:** Standard display

Read permission: Read drive data or acknowledge messages

Write permission: Edit device configuration or drive applications

Can be changed in the operating state: Commissioning

Parameter group: Position control, Basic parameters / mechanical system

Unit: -

Min:	Max:	Factory setting:
0	11	0

Description: Sets the physical measurement unit (MU) for acceleration.

Value:
0: 1000LU/s² (user-defined)
6: m/s²
7: mm/s²
10: in/s²
11: ft/s²

Note
MU: measurement unit

p2499 LR measurement unit jerk physical

Variant: S200 PTI
Available when function is active: Position control
Values for: Basic positioner for rotary motion
Data type: Integer16 **Visible in:** Standard display
Read permission: Read drive data or acknowledge messages
Write permission: Edit device configuration or drive applications
Can be changed in the operating state: Commissioning
Parameter group: Position control, Basic parameters / mechanical system
Unit: -

Min:	Max:	Factory setting:
0	18	18

Description: Sets the physical measurement unit (MU) for jerk.

Value:
0: 1000LU/s³ (user-defined)
18: °/s³

Note
MU: measurement unit

p2499 LR measurement unit jerk physical

Variant: S200 PTI
Available when function is active: Position control
Data type: Integer16 **Visible in:** Standard display
Read permission: Read drive data or acknowledge messages
Write permission: Edit device configuration or drive applications
Can be changed in the operating state: Commissioning
Parameter group: Position control, Basic parameters / mechanical system
Unit: -

Min:	Max:	Factory setting:
0	11	0

Description: Sets the physical measurement unit (MU) for jerk.

Value:
0: 1000LU/s³ (user-defined)
7: mm/s³
10: in/s³
11: ft/s³

Note
MU: measurement unit

p2502[0] LR encoder assignment

Variant:	S200 PTI	
Available when function is active:	Position control	
Data type: Integer16	**Visible in:** Standard display	
Read permission:	Read drive data or acknowledge messages	
Write permission:	Edit device configuration or drive applications	
Can be changed in the operating state:	Commissioning	
Parameter group:	Basic parameters / mechanical system, Actual position value preprocessing	
Unit: -		
Min:	**Max:**	**Factory setting:**
1	1	1

Description: Setting to assign the encoder.
The actual value preprocessing and the closed-loop position control are carried out using the assigned encoder.

Value: 1: Motor encoder

p2503[0] LR measurement unit MU per 10 mm

Variant:	S200 PTI	
Available when function is active:	Mechanical data configuration for APC or LR	
Data type: FloatingPoint32	**Visible in:** Extended display	
Read permission:	Read drive data or acknowledge messages	
Write permission:	Edit device configuration or drive applications	
Can be changed in the operating state:	Commissioning	
Parameter group:	Position control	
Unit: mm		
Min:	**Max:**	**Factory setting:**
0.000001 [mm]	2.1474837e+09 [mm]	10000.000000 [mm]

Description: Sets the measurement unit MU per 10 mm set by the user.
When selecting a physical unit (p2496 not equal to 0), then the drive automatically preassigns the parameter and it cannot be changed.

For p2496 = 0, a reference is established between the physical arrangement and the neutral length unit LU used in the drive.
Example, linear scale:
p2503 = 10000 means: 10 mm should be resolved to µm (this means that 1 LU = 1 µm).

Note
MU: measurement unit

p2503[0] LR measurement unit MU per 10 mm

Variant:	S200 PTI
Available when function is active:	Mechanical data configuration for APC or LR
Values for:	Basic positioner for rotary motion
Data type: FloatingPoint32	**Visible in:** Extended display

Read permission:	Read drive data or acknowledge messages	
Write permission:	Edit device configuration or drive applications	
Can be changed in the operating state:	Commissioning	
Parameter group:	Position control	
Unit: °		
Min:	**Max:**	**Factory setting:**
0.000001 [°]	2.1474837e+09 [°]	10000.000000 [°]

Description: Sets the measurement unit MU per 10 mm set by the user.

When selecting a physical unit (p2496 not equal to 0), then the drive automatically preassigns the parameter and it cannot be changed.

For p2496 = 0, a reference is established between the physical arrangement and the neutral length unit LU used in the drive.

Example, linear scale:

p2503 = 10000 means: 10 mm should be resolved to µm (this means that 1 LU = 1 µm).

Note
MU: measurement unit

p2504[0] LR motor/load motor revolutions

Variant:	S200 PTI	
Available when function is active:	Mechanical data configuration for APC or LR	
Data type: Unsigned32	**Visible in:** Standard display	
Read permission:	Read drive data or acknowledge messages	
Write permission:	Edit device configuration or drive applications	
Can be changed in the operating state:	Commissioning	
Parameter group:	Position control, Basic parameters / mechanical system	
Unit: -		
Min:	**Max:**	**Factory setting:**
1	1048576	1

Description: Sets the motor revolutions for the gearbox factor between the motor shaft and load shaft.

Gearbox factor = motor revolutions (p2504) / load revolutions (p2505)

Dependency: See also: p2505

p2505[0] LR motor/load load revolutions

Variant:	S200 PTI	
Available when function is active:	Mechanical data configuration for APC or LR	
Data type: Integer32	**Visible in:** Standard display	
Read permission:	Read drive data or acknowledge messages	
Write permission:	Edit device configuration or drive applications	
Can be changed in the operating state:	Commissioning	
Parameter group:	Position control, Basic parameters / mechanical system	
Unit: -		
Min:	**Max:**	**Factory setting:**
-1048576	1048576	1

Description: Sets the load revolutions for the gearbox factor between the motor shaft and load shaft.

Gearbox factor = motor revolutions (p2504) / load revolutions (p2505)

Dependency: See also: p2504

p2506[0] LR length unit MU per load revolution

Variant:	S200 PTI	
Available when function is active:	Mechanical data configuration for APC or LR	
Values for:	Basic positioner for rotary motion	
Data type: FloatingPoint32	**Visible in:** Extended display	
Read permission:	Read drive data or acknowledge messages	
Write permission:	Edit device configuration or drive applications	
Can be changed in the operating state:	Commissioning	
Parameter group:	Position control, Basic parameters / mechanical system	
Unit: °		
Min:	**Max:**	**Factory setting:**
0.000001 [°]	2.1474837e+09 [°]	360.000000 [°]

Description: Sets the rotary unit MU per load revolution set by the user. For a rotary encoder, this establishes a reference between the physical arrangement and the user-specific rotating unit MU.

Example:

Rotating unit LU (p2496 = 0)

Rotary encoder, 1 revolution should be broken down into mdegrees, (i.e. 1 LU = 1 mdegrees).

--> One load revolution corresponds to 360000 LU

--> p2506 = 360000

Dependency: See also: p2496

Note
When selecting a physical length unit, the drive automatically preassigns the parameter and it cannot be changed.

p2506[0] LR measurement unit MU per load distance

Variant:	S200 PTI	
Available when function is active:	Mechanical data configuration for APC or LR	
Data type: FloatingPoint32	**Visible in:** Extended display	
Read permission:	Read drive data or acknowledge messages	
Write permission:	Edit device configuration or drive applications	
Can be changed in the operating state:	Commissioning	
Parameter group:	Position control, Basic parameters / mechanical system	
Unit: mm		
Min:	**Max:**	**Factory setting:**
0.000001 [mm]	2.1474837e+09 [mm]	10000.000000 [mm]

Description: Sets the measurement unit MU per load distance set by the user.

For a rotary encoder, this establishes a reference between the actual physical situation and the user-specific measurement unit MU.

Example:

Rotary encoder, ballscrew with 10 mm/revolution, 10 mm should be broken down to units of µm.

Length unit LU (p2496 = 0)

--> One load distance corresponds to 10000 LU (i.e. 1 LU = 1 µm)

--> p2506 = 10000

Physical unit µm (2496) = 4

--> One load distance corresponds to 10000 µm

--> p2506 = 10000

Dependency: See also: p2496

p2507[0] LR absolute encoder adjustment status

Variant:	S200 PTI	
Available when function is active:	Position control	
Data type: Integer16	**Visible in:** Standard display	
Read permission:	Read drive data or acknowledge messages	
Write permission:	Edit device configuration or drive applications	
Can be changed in the operating state:	Operation	
Parameter group:	Position control	
Unit: -		
Min:	**Max:**	**Factory setting:**
0	3	1

Description: Activates the adjustment and display of the status of the adjustment for absolute encoders.

For p2507 = 2:

This initiates encoder adjustment. The status is displayed using the other values.

Value:

0: Error occurred while adjusting

1: Absolute encoder not adjusted

2: Absolute encoder not adjusted and encoder adjustment initiated

3: Absolute encoder adjusted

Dependency: See also: c2598, p2599, c11500

⚠ CAUTION

For rotating absolute encoders, when adjusting, a range is set up symmetrically around zero with half of the encoder range, within which the position must be re-established after switch-off/switch-on. In this range, it is only permissible that the encoder overflows.

After the adjustment has been completed, it must be guaranteed that the range is not exited. The reason for this is that outside the range, there is no clear reference any longer between the encoder actual value and mechanical system.

If the home position (c2598) lies in this range, then the position actual value is set when adjusting to the home position. Otherwise, adjustment is canceled with F07443.

There is no overflow for linear absolute encoders. This means that after the adjustment, the position can be re-established in the complete traversing range after switch-off/switch-on. When adjusting, the position actual value is set to the home position.

Note

To permanently accept the determined position offset, it must be retentively saved (p0977).

This adjustment can only be initiated for an absolute encoder.

c2510[0...3] LR selecting measuring probe evaluation

Variant:	S200 PTI
Available when function is active:	Position control
Data type: Unsigned8	**Visible in:** Standard display
Read permission:	Read drive data or acknowledge messages
Write permission:	Edit device configuration or drive applications
Parameter group:	Homing, Traversing blocks, Position control
Unit: -	

Description:
Signal to select the measuring probe.
0 signal, measuring probe 1 is used.
1 signal, measuring probe 2 is used.

Index:
[0] = Position control
[1] = Motor encoder
[2] = Reserved
[3] = Reserved

Dependency:
See also: p2502, c2511

Note
When function "Basic positioner" is activated, the measuring probe is selected at the 0/1 edge at r2684.1 (passive homing active).

c2511[0...3] LR measuring probe evaluation edge

Variant:	S200 PTI
Available when function is active:	Position control
Data type: Unsigned8	**Visible in:** Standard display
Read permission:	Read drive data or acknowledge messages
Write permission:	Edit device configuration or drive applications
Parameter group:	Homing, Traversing blocks, Position control
Unit: -	

Description:
Signal to evaluate the measuring probe edge.
1 signal:
The falling edge of the measuring probe (c2510) is used.
0 signal:
The rising edge of the measuring probe (c2510) is used.

Index:
[0] = Position control
[1] = Motor encoder
[2] = Reserved
[3] = Reserved

Dependency:
See also: p2502, c2510

r2521[0...3] LR position actual value

Variant:	S200 PTI
Available when function is active:	Position control
Data type: FloatingPoint64	**Visible in:** Standard display
Read permission:	Read drive data or acknowledge messages
Parameter group:	Jog, Homing, Traversing blocks, Direct setpoint input (MDI), Actual position value preprocessing
Unit: mm	

Description: Display for the position actual value determined by the position actual value processing.

Index: [0] = Position control
[1] = Motor encoder
[2] = Reserved
[3] = Reserved

Dependency: See also: p2502, r2526

Note
r2526.0 = 1 --> The position actual value in r2521[0] for the position control is valid.

r2521[0...3] LR position actual value

Variant: S200 PTI

Available when function is active: Position control

Values for: Basic positioner for rotary motion

Data type: FloatingPoint64 **Visible in:** Standard display

Read permission: Read drive data or acknowledge messages

Parameter group: Jog, Homing, Traversing blocks, Direct setpoint input (MDI), Actual position value preprocessing

Unit: °

Description: Display for the position actual value determined by the position actual value processing.

Index: [0] = Position control
[1] = Motor encoder
[2] = Reserved
[3] = Reserved

Dependency: See also: p2502, r2526

Note
r2526.0 = 1 --> The position actual value in r2521[0] for the position control is valid.

r2522[0...3] LR velocity actual value

Variant: S200 PTI

Available when function is active: Position control

Data type: FloatingPoint32 **Visible in:** Standard display

Read permission: Read drive data or acknowledge messages

Parameter group: Jog, Homing, Traversing blocks, Direct setpoint input (MDI), Actual position value preprocessing

Unit: mm/s

Description: Display for the velocity actual value determined by the position actual value processing.

Index: [0] = Position control
[1] = Motor encoder
[2] = Reserved
[3] = Reserved

Dependency: See also: p2502, r2526

Note
r2526.0 = 1 --> The velocity actual value in r2522[0] for the position control is valid.

r2522[0...3] LR velocity actual value

Variant: S200 PTI

Available when function is active: Position control

	Values for:	Basic positioner for rotary motion
	Data type: FloatingPoint32	**Visible in:** Standard display
	Read permission:	Read drive data or acknowledge messages
	Parameter group:	Jog, Homing, Traversing blocks, Direct setpoint input (MDI), Actual position value preprocessing
	Unit: °/s	
Description:	Display for the velocity actual value determined by the position actual value processing.	
Index:	[0] = Position control [1] = Motor encoder [2] = Reserved [3] = Reserved	
Dependency:	See also: p2502, r2526	

Note
r2526.0 = 1 --> The velocity actual value in r2522[0] for the position control is valid.

r2523[0...3] LR measured value

	Variant:	S200 PTI
	Available when function is active:	Position control
	Data type: FloatingPoint64	**Visible in:** Extended display
	Read permission:	Read drive data or acknowledge messages
	Parameter group:	Position control
	Unit: mm	
Description:	Displays the measured values that were determined using functions "Homing mark search" and "Measuring probe evaluation".	
Index:	[0] = Position control [1] = Motor encoder [2] = Reserved [3] = Reserved	
Dependency:	See also: p2502, r2526	

Note
r2526.2 = 1 --> The measured value in r2523[0] for the closed-loop position control is valid.

r2523[0...3] LR measured value

	Variant:	S200 PTI
	Available when function is active:	Position control
	Values for:	Basic positioner for rotary motion
	Data type: FloatingPoint64	**Visible in:** Extended display
	Read permission:	Read drive data or acknowledge messages
	Parameter group:	Position control
	Unit: °	
Description:	Displays the measured values that were determined using functions "Homing mark search" and "Measuring probe evaluation".	
Index:	[0] = Position control [1] = Motor encoder [2] = Reserved [3] = Reserved	
Dependency:	See also: p2502, r2526	

Note
r2526.2 = 1 --> The measured value in r2523[0] for the closed-loop position control is valid.

r2526.0...12 LR status word

Variant: S200 PTI
Available when function is active: Position control
Data type: Unsigned16 **Visible in:** Standard display
Read permission: Read drive data or acknowledge messages
Parameter group: Actual position value preprocessing
Unit: -

Description: Displays the status word of the position controller.

Bit array:

Bit	Signal name	1 signal	0 signal
00	Position actual value valid	Yes	No
01	Homing active	Yes	No
02	Measured value valid	Yes	No
03	Position control active	Yes	No
04	Fixed stop reached	Yes	No
05	Fixed stop outside window	Yes	No
06	Position controller output limited	Yes	No
07	Request tracking mode	Yes	No
08	Clamping active when traveling to fixed stop	Yes	No
09	Setting value for adjustment valid	Yes	No
10	Absolute encoder adjusted	Yes	No
11	Absolute encoder adjustment unsuccessful	Yes	No
12	Absolute encoder being adjusted	Yes	No

Dependency: See also: r2521, r2522, r2523

Note
For bit 04:
The signal is influenced via p2634.
For bit 05:
The signal is influenced via p2635.

c2530 LR position setpoint

Variant: S200 PTI
Available when function is active: Position control
Data type: FloatingPoint64 **Visible in:** Standard display
Read permission: Read drive data or acknowledge messages
Write permission: Edit device configuration or drive applications
Parameter group: Position controller
Unit: mm

Description: Signal for the position setpoint of the position controller.

Dependency: See also: r2665

c2530 LR position setpoint

Variant: S200 PTI
Available when function is active: Position control

	Values for:	Basic positioner for rotary motion
	Data type: FloatingPoint64	**Visible in:** Standard display
	Read permission:	Read drive data or acknowledge messages
	Write permission:	Edit device configuration or drive applications
	Parameter group:	Position controller
	Unit: °	
Description:	Signal for the position setpoint of the position controller.	
Dependency:	See also: r2665	

c2531 LR velocity setpoint

	Variant:	S200 PTI
	Available when function is active:	Position control
	Data type: FloatingPoint32	**Visible in:** Standard display
	Read permission:	Read drive data or acknowledge messages
	Write permission:	Edit device configuration or drive applications
	Parameter group:	Position controller
	Unit: mm/s	
Description:	Signal for the velocity setpoint of the position controller.	
Dependency:	See also: r2666	

c2531 LR velocity setpoint

	Variant:	S200 PTI
	Available when function is active:	Position control
	Values for:	Basic positioner for rotary motion
	Data type: FloatingPoint32	**Visible in:** Standard display
	Read permission:	Read drive data or acknowledge messages
	Write permission:	Edit device configuration or drive applications
	Parameter group:	Position controller
	Unit: °/s	
Description:	Signal for the velocity setpoint of the position controller.	
Dependency:	See also: r2666	

p2533[0] LR position setpoint filter time constant

	Variant:	S200 PTI	
	Available when function is active:	Position control	
	Data type: FloatingPoint32	**Visible in:** Extended display	
	Read permission:	Read drive data or acknowledge messages	
	Write permission:	Edit device configuration or drive applications	
	Can be changed in the operating state:	Operation	
	Parameter group:	Position controller	
	Unit: ms		
	Min:	**Max:**	**Factory setting:**
	0.00 [ms]	1000.00 [ms]	0.00 [ms]
Description:	Sets the time constant for the position setpoint filter (PT1).		

Note
The effective Kv factor (position loop gain) is reduced with the filter. This allows a softer control behavior with improved tolerance with respect to noise/disturbances.
Applications:
- Reduces the precontrol dynamic response.
- Jerk limiting.

p2534[0] LR speed precontrol factor

Variant:	S200 PTI	
Available when function is active:	Position control	
Data type: FloatingPoint32	**Visible in:** Standard display	
Read permission:	Read drive data or acknowledge messages	
Write permission:	Edit device configuration or drive applications	
Can be changed in the operating state:	Operation	
Parameter group:	Position controller	
Unit: %		
Min:	**Max:**	**Factory setting:**
0.00 [%]	200.00 [%]	0.00 [%]

Description: Setting for activation and weighting of the speed precontrol value.
Value = 0 % --> The precontrol is deactivated.

Dependency: See also: p2535, p2536, r2563

Note
When the axis control loop is optimally set as well as a precisely determined equivalent time constant of the speed control loop, the precontrol factor is 100%.

p2535[0] LR speed precontrol symmetrizing filter dead time

Variant:	S200 PTI	
Available when function is active:	Position control	
Data type: FloatingPoint32	**Visible in:** Extended display	
Read permission:	Read drive data or acknowledge messages	
Write permission:	Edit device configuration or drive applications	
Can be changed in the operating state:	Operation	
Parameter group:	Position controller	
Unit: -		
Min:	**Max:**	**Factory setting:**
0.00	2.00	0.00

Description: Sets the "fractional" dead time to emulate the timing behavior of the speed control loop.
The selected multiplier refers to the position controller sampling time (dead time= p2535 * position controller clock cycle).

Dependency: See also: p2536

NOTICE
When speed precontrol is active (p2534 > 0 %), the following applies:
In addition to the set dead time (p2535), internally two position controller sampling times are effective.
When speed precontrol is inactive (p2534 = 0 %), the following applies:
No dead time is effective (p2535 and internal).

Note
Together with p2536, the time response of the closed speed control loop can be emulated.

p2536[0] LR speed precontrol symmetrizing filter PT1

Variant:	S200 PTI	
Available when function is active:	Position control	
Data type: FloatingPoint32	**Visible in:** Extended display	
Read permission:	Read drive data or acknowledge messages	
Write permission:	Edit device configuration or drive applications	
Can be changed in the operating state:	Operation	
Parameter group:	Position controller	
Unit: ms		
Min:	**Max:**	**Factory setting:**
0.00 [ms]	100.00 [ms]	0.00 [ms]

Description: Sets a PT1 filter to emulate the time response of the closed speed control loop.

Dependency: See also: p2535

NOTICE
When speed precontrol is inactive (p2534 = 0 %), the following applies:
If a PT1 filter has been set, it is not effective.

Note
Together with p2535, the time response of the closed speed control loop can be emulated.

p2538[0] LR proportional gain

Variant:	S200 PTI	
Available when function is active:	Position control	
Data type: FloatingPoint32	**Visible in:** Standard display	
Read permission:	Read drive data or acknowledge messages	
Write permission:	Edit device configuration or drive applications	
Can be changed in the operating state:	Operation	
Parameter group:	Position controller	
Unit: 1000 rpm		
Min:	**Max:**	**Factory setting:**
0.000 [1000 rpm]	300.000 [1000 rpm]	1.000 [1000 rpm]

Description: Sets the proportional gain (P gain, position loop gain, Kv factor) of the position controller.

Dependency: See also: p2539, r2557, r2558

Note
The proportional gain is used define at which traversing velocity which following error is obtained (without precontrol)
Low proportional gain:
Slow response to a setpoint - actual value difference, the following error becomes large.
High proportional gain:
Fast response to the setpoint - actual value difference, the following error becomes small.

p2539[0] LR integral time

Variant: S200 PTI

Available when function is active:	Position control	
Data type: FloatingPoint32	**Visible in:** Extended display	
Read permission:	Read drive data or acknowledge messages	
Write permission:	Edit device configuration or drive applications	
Can be changed in the operating state:	Operation	
Parameter group:	Position controller	
Unit: ms		
Min:	**Max:**	**Factory setting:**
0.00 [ms]	100000.00 [ms]	0.00 [ms]

Description: Setting to activate the integral time of the position controller.
Value = 0 ms --> The I component of the position controller is deactivated.

Dependency: See also: p2538, r2559

p2540 LR position controller output speed limit

Variant:	S200 PTI	
Available when function is active:	Position control	
Data type: FloatingPoint32	**Visible in:** Extended display	
Read permission:	Read drive data or acknowledge messages	
Write permission:	Edit device configuration or drive applications	
Can be changed in the operating state:	Operation	
Parameter group:	Position controller	
Unit: rpm		
Min:	**Max:**	**Factory setting:**
0.000 [rpm]	210000.000 [rpm]	210000.000 [rpm]

Description: Sets the speed limit of the position controller output.

Dependency: See also: c2541

c2541 LR position controller output speed limit signal

Variant:	S200 PTI
Available when function is active:	Position control
Data type: FloatingPoint32	**Visible in:** Extended display
Read permission:	Read drive data or acknowledge messages
Write permission:	Edit device configuration or drive applications
Parameter group:	Position controller
Unit: rpm	

Description: Signal for limiting the position controller output.

Dependency: See also: p2540

p2542 LR standstill window

Variant:	S200 PTI
Available when function is active:	Position control
Values for:	Basic positioner for rotary motion
Data type: FloatingPoint32	**Visible in:** Standard display
Read permission:	Read drive data or acknowledge messages

Write permission:	Edit device configuration or drive applications	
Can be changed in the operating state:	Operation	
Parameter group:	Position monitoring	
Unit: °		
Min:	**Max:**	**Factory setting:**
0.000000 [°]	2.1474839e+09 [°]	10.000000 [°]

Description: Sets the standstill window for the standstill monitoring function.

After the standstill monitoring time expires, it is cyclically checked whether the difference between the setpoint and actual position is located within the standstill window and, if required, an appropriate fault is output.

Value = 0 --> The standstill monitoring is deactivated.

Dependency: See also: p2543, p2544

Note
The following applies for the setting of the standstill window and positioning window:
Standstill window (p2542) >= positioning window (p2544)

p2542 LR standstill window

Variant:	S200 PTI	
Available when function is active:	Position control	
Data type: FloatingPoint32	**Visible in:** Standard display	
Read permission:	Read drive data or acknowledge messages	
Write permission:	Edit device configuration or drive applications	
Can be changed in the operating state:	Operation	
Parameter group:	Position monitoring	
Unit: mm		
Min:	**Max:**	**Factory setting:**
0.000000 [mm]	2.1474839e+09 [mm]	200.000000 [mm]

Description: Sets the standstill window for the standstill monitoring function.

After the standstill monitoring time expires, it is cyclically checked whether the difference between the setpoint and actual position is located within the standstill window and, if required, an appropriate fault is output.

Value = 0 --> The standstill monitoring is deactivated.

Dependency: See also: p2543, p2544

Note
The following applies for the setting of the standstill window and positioning window:
Standstill window (p2542) >= positioning window (p2544)

p2543 LR standstill monitoring time

Variant:	S200 PTI
Available when function is active:	Position control
Data type: FloatingPoint32	**Visible in:** Standard display
Read permission:	Read drive data or acknowledge messages
Write permission:	Edit device configuration or drive applications
Can be changed in the operating state:	Operation
Parameter group:	Position monitoring
Unit: ms	

Min:	Max:	Factory setting:
0.00 [ms]	100000.00 [ms]	200.00 [ms]

Description: Sets the standstill monitoring time for the standstill monitoring function.

After the standstill monitoring time expires, it is cyclically checked whether the difference between the setpoint and actual position is located within the standstill window and, if required, an appropriate fault is output.

Dependency: See also: p2542, p2545

Note
The following applies for the setting of the standstill and positioning monitoring time:
Standstill monitoring time (p2543) <= positioning monitoring time (p2545)

p2544 LR positioning window

Variant: S200 PTI

Available when function is active: Position control

Values for: Basic positioner for rotary motion

Data type: FloatingPoint32 **Visible in:** Standard display

Read permission: Read drive data or acknowledge messages

Write permission: Edit device configuration or drive applications

Can be changed in the operating state: Operation

Parameter group: Position monitoring

Unit: °

Min:	Max:	Factory setting:
0.000000 [°]	2.1474839e+09 [°]	2.000000 [°]

Description: Sets the positioning window for the positioning monitoring function.

After the positioning monitoring time expires, it is checked once as to whether the difference between the setpoint and actual position lies within the positioning window and if required an appropriate fault is output.

Value = 0 --> The positioning monitoring function is deactivated.

Dependency: See also: p2542, p2545, r2684

Note
The following applies for the setting of the standstill and positioning window:
Standstill window (p2542) >= positioning window (p2544)

p2544 LR positioning window

Variant: S200 PTI

Available when function is active: Position control

Data type: FloatingPoint32 **Visible in:** Standard display

Read permission: Read drive data or acknowledge messages

Write permission: Edit device configuration or drive applications

Can be changed in the operating state: Operation

Parameter group: Position monitoring

Unit: mm

Min:	Max:	Factory setting:
0.000000 [mm]	2.1474839e+09 [mm]	40.000000 [mm]

Description: Sets the positioning window for the positioning monitoring function.

After the positioning monitoring time expires, it is checked once as to whether the difference between the setpoint and actual position lies within the positioning window and if required an appropriate fault is output.

Value = 0 --> The positioning monitoring function is deactivated.

Dependency: See also: p2542, p2545, r2684

Note
The following applies for the setting of the standstill and positioning window:
Standstill window (p2542) >= positioning window (p2544)

p2545 LR positioning monitoring time

Variant:	S200 PTI	
Available when function is active:	Position control	
Data type: FloatingPoint32	**Visible in:** Standard display	
Read permission:	Read drive data or acknowledge messages	
Write permission:	Edit device configuration or drive applications	
Can be changed in the operating state:	Operation	
Parameter group:	Position monitoring	
Unit: ms		
Min:	**Max:**	**Factory setting:**
0.00 [ms]	100000.00 [ms]	1000.00 [ms]

Description: Sets the positioning monitoring time for the positioning monitoring.
After the positioning monitoring time expires, it is checked once as to whether the difference between the setpoint and actual position lies within the positioning window and if required an appropriate fault is output.

Dependency: See also: p2543, p2544, r2684

Note
The following applies for the setting of the standstill and positioning monitoring time:
Standstill monitoring time (p2543) <= positioning monitoring time (p2545)

p2546[0] LR dynamic following error monitoring tolerance

Variant:	S200 PTI	
Available when function is active:	Position control	
Values for:	Basic positioner for rotary motion	
Data type: FloatingPoint32	**Visible in:** Standard display	
Read permission:	Read drive data or acknowledge messages	
Write permission:	Edit device configuration or drive applications	
Can be changed in the operating state:	Operation	
Parameter group:	Position monitoring	
Unit: °		
Min:	**Max:**	**Factory setting:**
0.000000 [°]	2.1474839e+09 [°]	36.000000 [°]

Description: Sets the tolerance for the dynamic following error monitoring.
If the dynamic following error (r2563) exceeds the selected tolerance, then an appropriate fault is output.
Value = 0 --> The dynamic following error monitoring is deactivated.

Dependency: See also: r2563, r2684

Note
The tolerance bandwidth is intended to prevent the dynamic following error monitoring incorrectly responding due to operational control sequences (e.g. during load surges).

p2546[0] LR dynamic following error monitoring tolerance

Variant: S200 PTI

Available when function is active:	Position control	
Data type: FloatingPoint32	**Visible in:** Standard display	
Read permission:	Read drive data or acknowledge messages	
Write permission:	Edit device configuration or drive applications	
Can be changed in the operating state:	Operation	
Parameter group:	Position monitoring	
Unit: mm		
Min:	**Max:**	**Factory setting:**
0.000000 [mm]	2.1474839e+09 [mm]	1000.000000 [mm]

Description: Sets the tolerance for the dynamic following error monitoring.
If the dynamic following error (r2563) exceeds the selected tolerance, then an appropriate fault is output.
Value = 0 --> The dynamic following error monitoring is deactivated.

Dependency: See also: r2563, r2684

Note
The tolerance bandwidth is intended to prevent the dynamic following error monitoring incorrectly responding due to operational control sequences (e.g. during load surges).

r2556 LR position setpoint after setpoint smoothing

Variant:	S200 PTI
Available when function is active:	Position control
Data type: FloatingPoint64	**Visible in:** Standard display
Read permission:	Read drive data or acknowledge messages
Parameter group:	Position controller
Unit: mm	

Description: Displays the position setpoint after the setpoint smoothing.

r2556 LR position setpoint after setpoint smoothing

Variant:	S200 PTI
Available when function is active:	Position control
Values for:	Basic positioner for rotary motion
Data type: FloatingPoint64	**Visible in:** Standard display
Read permission:	Read drive data or acknowledge messages
Parameter group:	Position controller
Unit: °	

Description: Displays the position setpoint after the setpoint smoothing.

r2557 LR position controller input system deviation

Variant:	S200 PTI
Available when function is active:	Position control
Data type: FloatingPoint32	**Visible in:** Standard display
Read permission:	Read drive data or acknowledge messages
Parameter group:	Position controller
Unit: mm	

Description: Displays the difference between the position setpoint and the position actual value at the position controller input.

r2557 LR position controller input system deviation

Variant:	S200 PTI
Available when function is active:	Position control
Values for:	Basic positioner for rotary motion
Data type: FloatingPoint32	**Visible in:** Standard display
Read permission:	Read drive data or acknowledge messages
Parameter group:	Position controller
Unit: °	

Description: Displays the difference between the position setpoint and the position actual value at the position controller input.

r2558 LR position controller output P component

Variant:	S200 PTI
Available when function is active:	Position control
Data type: FloatingPoint32	**Visible in:** Extended display
Read permission:	Read drive data or acknowledge messages
Parameter group:	Position controller
Unit: rpm	

Description: Displays the P component at the output of the position controller (speed setpoint).

r2559 LR position controller output I component

Variant:	S200 PTI
Available when function is active:	Position control
Data type: FloatingPoint32	**Visible in:** Extended display
Read permission:	Read drive data or acknowledge messages
Parameter group:	Position controller
Unit: rpm	

Description: Displays the I component at the output of the position controller (speed setpoint).

r2560 LR speed setpoint

Variant:	S200 PTI
Available when function is active:	Position control
Data type: FloatingPoint32	**Visible in:** Standard display
Read permission:	Read drive data or acknowledge messages
Parameter group:	Position controller
Unit: rpm	

Description: Displays the speed setpoint after limiting (c2541).

r2561 LR speed precontrol value

Variant:	S200 PTI
Available when function is active:	Position control
Data type: FloatingPoint32	**Visible in:** Standard display
Read permission:	Read drive data or acknowledge messages
Parameter group:	Position controller
Unit: rpm	

Description: Displays the speed setpoint due to the precontrol.

r2562 LR total speed setpoint

Variant:	S200 PTI
Available when function is active:	Position control
Data type: FloatingPoint32	**Visible in:** Standard display
Read permission:	Read drive data or acknowledge messages
Parameter group:	Position controller
Unit: rpm	

Description: Displays the total speed setpoint

This value is obtained from the sum of the speed precontrol and position controller output.

Dependency: See also: r2560, r2561

r2563 LR following error dynamic model

Variant:	S200 PTI
Available when function is active:	Position control
Data type: FloatingPoint32	**Visible in:** Standard display
Read permission:	Read drive data or acknowledge messages
Parameter group:	Jog, Homing, Traversing blocks, Direct setpoint input (MDI), Position monitoring
Unit: mm	

Description: Displays the dynamic following error.

This value is the deviation, corrected by the velocity-dependent component, between the position setpoint and the position actual value.

Note

For p2534 >= 100 % (precontrol activated) the following applies:

The dynamic following error (r2563) corresponds to the system deviation (r2557) at the position controller input.

For 0 % < p2534 < 100 % (precontrol activated) or p2534 = 0 % (precontrol deactivated) the following applies:

The dynamic following error (r2563) is the deviation between the measured position actual value and a value that is calculated from the position setpoint via a PT1 model. This compensates the system-related velocity-dependent system deviation for a P controller.

r2563 LR following error dynamic model

Variant:	S200 PTI
Available when function is active:	Position control
Values for:	Basic positioner for rotary motion
Data type: FloatingPoint32	**Visible in:** Standard display
Read permission:	Read drive data or acknowledge messages
Parameter group:	Jog, Homing, Traversing blocks, Direct setpoint input (MDI), Position monitoring
Unit: °	

Description: Displays the dynamic following error.

This value is the deviation, corrected by the velocity-dependent component, between the position setpoint and the position actual value.

Note
For p2534 >= 100 % (precontrol activated) the following applies:
The dynamic following error (r2563) corresponds to the system deviation (r2557) at the position controller input.
For 0 % < p2534 < 100 % (precontrol activated) or p2534 = 0 % (precontrol deactivated) the following applies:
The dynamic following error (r2563) is the deviation between the measured position actual value and a value that is calculated from the position setpoint via a PT1 model. This compensates the system-related velocity-dependent system deviation for a P controller.

r2564 LR torque precontrol value

Variant: S200 PTI
Available when function is active: Position control
Data type: FloatingPoint32 **Visible in:** Standard display
Read permission: Read drive data or acknowledge messages
Parameter group: Position controller
Unit: Nm

Description: Displays the torque precontrol value.

Note
The torque precontrol value is the derivation over time of the speed precontrol value and is referred to a moment of inertia of 1 kgm^2/2 PI. When using the precontrol, then this should be evaluated corresponding to the actual moment of inertia.

r2565 LR following error actual

Variant: S200 PTI
Available when function is active: Position control
Data type: FloatingPoint32 **Visible in:** Standard display
Read permission: Read drive data or acknowledge messages
Parameter group: Position controller
Unit: mm

Description: Displays the actual following error.
This value is the deviation between the position setpoint - after fine interpolation - and the position actual value.

NOTICE
When speed precontrol is active (p2534 > 0 %), the following applies:
To calculate this value, the position setpoint is delayed by two position controller sampling times.
When speed precontrol is inactive (p2534 = 0 %), the following applies:
To calculate this value, the position setpoint is delayed by two position controller clock cycles.

r2565 LR following error actual

Variant: S200 PTI
Available when function is active: Position control
Values for: Basic positioner for rotary motion
Data type: FloatingPoint32 **Visible in:** Standard display
Read permission: Read drive data or acknowledge messages
Parameter group: Position controller
Unit: °

Description: Displays the actual following error.
This value is the deviation between the position setpoint - after fine interpolation - and the position actual value.

NOTICE
When speed precontrol is active (p2534 > 0 %), the following applies: To calculate this value, the position setpoint is delayed by two position controller sampling times. When speed precontrol is inactive (p2534 = 0 %), the following applies: To calculate this value, the position setpoint is delayed by two position controller clock cycles.

p2567[0] LR torque precontrol moment of inertia

Variant:	S200 PTI	
Available when function is active:	Position control	
Data type: FloatingPoint32	**Visible in:** Standard display	
Read permission:	Read drive data or acknowledge messages	
Write permission:	Edit device configuration or drive applications	
Can be changed in the operating state:	Operation	
Parameter group:	Position controller	
Unit: kgm²		
Min:	**Max:**	**Factory setting:**
0.000000 [kgm²]	100000.000000 [kgm²]	0.000000 [kgm²]

Description: Sets the moment of inertia for the torque precontrol.

Dependency: See also: p2534, r2564

Note
When calculating the torque precontrol value (c2654), the time derivation of the speed precontrol value is multiplied by 2 PI * p2567.
For reasons associated with the compatibility to earlier firmware versions, the factory setting for p2567 = 1 kgm^2/2 PI. This means that r2564 remains as standard the derivation over time of the speed precontrol value and is referred, as before, to a moment of inertia of 1 kgm^2/2 PI. For torque precontrol, the moment of inertia can now be directly entered into p2567 (instead of subsequently evaluating the precontrol value).

c2568 EPOS hardware limit switch activation

Variant:	S200 PTI
Available when function is active:	Basic positioner
Data type: Unsigned8	**Visible in:** Standard display
Read permission:	Read drive data or acknowledge messages
Write permission:	Edit device configuration or drive applications
Parameter group:	Position limits
Unit: -	

Description: Signal to activate the hardware limit switch.
For c2568 = 1 signal:
Negative hardware limit switch (c2569) and positive hardware limit switch (c2570) are activated.
For c2568 = 0 signal:
Negative hardware limit switch (c2569) and positive hardware limit switch (c2570) are not evaluated.

Dependency: See also: c2569, c2570

Note
The traversing range can also be limited using software limit switches.

c2569 EPOS negative hardware limit switch

Variant: S200 PTI

	Available when function is active:	Basic positioner
	Data type: Unsigned8	**Visible in:** Standard display
	Read permission:	Read drive data or acknowledge messages
	Write permission:	Edit device configuration or drive applications
	Parameter group:	Position limits
	Unit: -	

Description: Signal for the hardware limit switch in the negative direction of travel.

Recommendation: Set the OFF3 ramp-down time (p1135) so that after the axis reaches the hardware limit switch at maximum velocity, the braking distance traveled by the axis is not longer than the distance that is available.

Sets message 07491 as alarm (A07491):

Set the maximum deceleration (p2573) so that after the axis reaches the hardware limit switch at maximum velocity, the braking distance traveled by the axis is not longer than the distance that is available.

Dependency: See also: p1135, c2568, c2570, p2573, r2684

⚠ CAUTION

The hardware limit switch is low active.

Sets message 07491 as fault (F07491):

For a 0 signal, the drive stops with the OFF3 ramp-down time (p1135), status signal r2684.13 = 1 is set, saved and the corresponding fault is output. After the fault has been acknowledged, only motion moving away from the hardware limit switch is permitted.

For a 0/1 signal and valid travel direction, when the hardware limit switch is exited, this is detected and status signal r2684.13 is set to 0.

Sets message 07491 as alarm (A07491):

For a 0 signal, the axis is stopped with the maximum deceleration (p2573), status signal r2684.13 is set to 1, saved and the appropriate alarm is output. Only motion away from the hardware limit switch is permitted.

For a 0/1 signal and valid travel direction, when the hardware limit switch is exited, this is detected and status signal r2684.13 is set to 0 and the alarm is cleared.

c2570 EPOS positive hardware limit switch

	Variant:	S200 PTI
	Available when function is active:	Basic positioner
	Data type: Unsigned8	**Visible in:** Standard display
	Read permission:	Read drive data or acknowledge messages
	Write permission:	Edit device configuration or drive applications
	Parameter group:	Position limits
	Unit: -	

Description: Signal for the hardware limit switch in the positive direction of travel.

Recommendation: Set the OFF3 ramp-down time (p1135) so that after the axis reaches the hardware limit switch at maximum velocity, the braking distance traveled by the axis is not longer than the distance that is available.

Dependency: See also: p1135, c2568, c2569, p2573, r2684

⚠ CAUTION

The hardware limit switch is low active.

For a 0 signal

the drive stops with the OFF3 ramp-down time (p1135), status signal r2684.14 = 1 is set, saved and the corresponding fault is output. After the fault has been acknowledged, only motion moving away from the hardware limit switch is permitted.

For a 0/1 signal

and valid travel direction, when the hardware limit switch is exited, this is detected and status signal r2684.14 is set to 0.

p2571 EPOS maximum velocity

Variant:	S200 PTI	
Available when function is active:	Basic positioner	
Values for:	Basic positioner for rotary motion	
Data type: FloatingPoint32	**Visible in:** Standard display	
Read permission:	Read drive data or acknowledge messages	
Write permission:	Edit device configuration or drive applications	
Can be changed in the operating state:	Operation	
Parameter group:	Dynamic response limits	
Unit: °/s		
Min:	**Max:**	**Factory setting:**
0.010 [°/s]	4e+07 [°/s]	18000.000 [°/s]

Description: Sets the maximum velocity for the "basic positioner" function (EPOS).

Dependency: See also: p2503, p2504, p2505, p2506

Note

The maximum velocity is active in all of the operating modes of the basic positioner.
The maximum velocity for the basic positioner should be aligned with the maximum speed/velocity of the speed/velocity controller:
Rotary encoders:
p2571[1000 LU/min] = min(p1082, p1083, |p1086|)[rpm] x p2505/p2504 x p2506/1000
Linear encoders:
p2571[1000 LU/min] = min(p1082, p1083, |p1086|)[m/min] x p2503/10[m]

p2571 EPOS maximum velocity

Variant:	S200 PTI	
Available when function is active:	Basic positioner	
Data type: FloatingPoint32	**Visible in:** Standard display	
Read permission:	Read drive data or acknowledge messages	
Write permission:	Edit device configuration or drive applications	
Can be changed in the operating state:	Operation	
Parameter group:	Dynamic response limits	
Unit: mm/s		
Min:	**Max:**	**Factory setting:**
0.010 [mm/s]	4e+07 [mm/s]	30000.000 [mm/s]

Description: Sets the maximum velocity for the "basic positioner" function (EPOS).

Dependency: See also: p2503, p2504, p2505, p2506

Note

The maximum velocity is active in all of the operating modes of the basic positioner.
The maximum velocity for the basic positioner should be aligned with the maximum speed/velocity of the speed/velocity controller:
Rotary encoders:
p2571[1000 LU/min] = min(p1082, p1083, |p1086|)[rpm] x p2505/p2504 x p2506/1000
Linear encoders:
p2571[1000 LU/min] = min(p1082, p1083, |p1086|)[m/min] x p2503/10[m]

p2572 EPOS maximum acceleration

Variant: S200 PTI

Available when function is active:	Basic positioner	
Values for:	Basic positioner for rotary motion	
Data type: FloatingPoint32	**Visible in:** Standard display	
Read permission:	Read drive data or acknowledge messages	
Write permission:	Edit device configuration or drive applications	
Can be changed in the operating state:	Ready for operation	
Parameter group:	Dynamic response limits, Jog	
Unit: °/s²		
Min:	**Max:**	**Factory setting:**
0.001 [°/s²]	2e+06 [°/s²]	360000.000 [°/s²]

Description: Sets the maximum acceleration for the "basic positioner" function (EPOS).

Dependency: See also: p2619

Note
The maximum acceleration appears to exhibit jumps (without jerk).
"Traversing blocks" operating mode:
The programmed acceleration override (p2619) acts on the maximum acceleration.
"Direct setpoint input/MDI" operating mode:
The acceleration override is effective (c2644, 4000 hex = 100 %).
"Jog" and "Active homing" operating modes:
No acceleration override is active. The axis starts with the maximum acceleration.

p2572 EPOS maximum acceleration

Variant:	S200 PTI	
Available when function is active:	Basic positioner	
Data type: FloatingPoint32	**Visible in:** Standard display	
Read permission:	Read drive data or acknowledge messages	
Write permission:	Edit device configuration or drive applications	
Can be changed in the operating state:	Ready for operation	
Parameter group:	Dynamic response limits, Jog	
Unit: mm/s²		
Min:	**Max:**	**Factory setting:**
0.001 [mm/s²]	2e+06 [mm/s²]	100.000 [mm/s²]

Description: Sets the maximum acceleration for the "basic positioner" function (EPOS).

Dependency: See also: p2619

Note
The maximum acceleration appears to exhibit jumps (without jerk).
"Traversing blocks" operating mode:
The programmed acceleration override (p2619) acts on the maximum acceleration.
"Direct setpoint input/MDI" operating mode:
The acceleration override is effective (c2644, 4000 hex = 100 %).
"Jog" and "Active homing" operating modes:
No acceleration override is active. The axis starts with the maximum acceleration.

p2573 EPOS maximum deceleration

Variant:	S200 PTI
Available when function is active:	Basic positioner

Values for:	Basic positioner for rotary motion	
Data type: FloatingPoint32	**Visible in:** Standard display	
Read permission:	Read drive data or acknowledge messages	
Write permission:	Edit device configuration or drive applications	
Can be changed in the operating state:	Ready for operation	
Parameter group:	Dynamic response limits, Jog	
Unit: °/s²		
Min:	**Max:**	**Factory setting:**
0.001 [°/s²]	2e+06 [°/s²]	360000.000 [°/s²]

Description: Sets the maximum deceleration for the "basic positioner" function (EPOS).

Dependency: See also: p2620

Note
The maximum deceleration appears to exhibit jumps (without jerk).
"Traversing blocks" operating mode:
The programmed deceleration override (p2620) acts on the maximum deceleration.
"Direct setpoint input/MDI" operating mode:
The deceleration override is effective (c2645, 4000 hex = 100 %).
"Jog" and "Active homing" operating modes:
No deceleration override is effective. The axis breaks with the maximum deceleration.

p2573 EPOS maximum deceleration

Variant:	S200 PTI	
Available when function is active:	Basic positioner	
Data type: FloatingPoint32	**Visible in:** Standard display	
Read permission:	Read drive data or acknowledge messages	
Write permission:	Edit device configuration or drive applications	
Can be changed in the operating state:	Ready for operation	
Parameter group:	Dynamic response limits, Jog	
Unit: mm/s²		
Min:	**Max:**	**Factory setting:**
0.001 [mm/s²]	2e+06 [mm/s²]	100.000 [mm/s²]

Description: Sets the maximum deceleration for the "basic positioner" function (EPOS).

Dependency: See also: p2620

Note
The maximum deceleration appears to exhibit jumps (without jerk).
"Traversing blocks" operating mode:
The programmed deceleration override (p2620) acts on the maximum deceleration.
"Direct setpoint input/MDI" operating mode:
The deceleration override is effective (c2645, 4000 hex = 100 %).
"Jog" and "Active homing" operating modes:
No deceleration override is effective. The axis breaks with the maximum deceleration.

p2574 EPOS jerk limiting

Variant:	S200 PTI
Available when function is active:	Basic positioner
Values for:	Basic positioner for rotary motion
Data type: FloatingPoint32	**Visible in:** Standard display

Read permission:	Read drive data or acknowledge messages	
Write permission:	Edit device configuration or drive applications	
Can be changed in the operating state:	Operation	
Parameter group:	Dynamic response limits	
Unit: °/s³		
Min:	**Max:**	**Factory setting:**
0.001 [°/s³]	1e+08 [°/s³]	7.2e+06 [°/s³]

Description: Sets the jerk limiting

Dependency: See also: p2572, p2573, c2575

Note

The jerk limiting is internally converted into a jerk time as follows:

Jerk time Tr = max(p2572, p2573) / p2574

The jerk time is internally limited to 1000 ms, and is rounded off to an integer multiple of the sampling time of the basic positioner cycle.

The jerk time is valid for the acceleration and deceleration phases also for unequal maximum acceleration (p2572) and maximum deceleration (p2573).

For unequal maximum acceleration and maximum deceleration, the motion is not optimal from a time perspective as the jerk limit cannot be used for the lower of the two values.

If, in the traversing profile, the acceleration time without jerk limiting is shorter than jerk time Tr, then motion with jerk limiting is not time-optimized.

For traversing motion with a direct transition between acceleration and deceleration (i.e. jerk time is greater than the constant velocity phase), jerk can increase up to twice the parameterized jerk.

CONTINUE_FLYING with direction reversal acts internally just like a CONTINUE_WITH_STOP without the "position reached" being set. Without jerk limiting, this behavior can hardly be noticed as, when reversing, the position setpoint is only kept at zero for one interpolator clock cycle.

For block change enable CONTINUE_WITH_STOP, jerk limiting results in a longer delay time.

p2574 EPOS jerk limiting

Variant:	S200 PTI	
Available when function is active:	Basic positioner	
Data type: FloatingPoint32	**Visible in:** Standard display	
Read permission:	Read drive data or acknowledge messages	
Write permission:	Edit device configuration or drive applications	
Can be changed in the operating state:	Operation	
Parameter group:	Dynamic response limits	
Unit: mm/s³		
Min:	**Max:**	**Factory setting:**
0.001 [mm/s³]	1e+08 [mm/s³]	10000.000 [mm/s³]

Description: Sets the jerk limiting

Dependency: See also: p2572, p2573, c2575

Note
The jerk limiting is internally converted into a jerk time as follows:
Jerk time Tr = max(p2572, p2573) / p2574
The jerk time is internally limited to 1000 ms, and is rounded off to an integer multiple of the sampling time of the basic positioner cycle.
The jerk time is valid for the acceleration and deceleration phases also for unequal maximum acceleration (p2572) and maximum deceleration (p2573).
For unequal maximum acceleration and maximum deceleration, the motion is not optimal from a time perspective as the jerk limit cannot be used for the lower of the two values.
If, in the traversing profile, the acceleration time without jerk limiting is shorter than jerk time Tr, then motion with jerk limiting is not time-optimized.
For traversing motion with a direct transition between acceleration and deceleration (i.e. jerk time is greater than the constant velocity phase), jerk can increase up to twice the parameterized jerk.
CONTINUE_FLYING with direction reversal acts internally just like a CONTINUE_WITH_STOP without the "position reached" being set. Without jerk limiting, this behavior can hardly be noticed as, when reversing, the position setpoint is only kept at zero for one interpolator clock cycle.
For block change enable CONTINUE_WITH_STOP, jerk limiting results in a longer delay time.

c2575 EPOS jerk limiting activation

Variant:	S200 PTI
Available when function is active:	Basic positioner
Data type: Unsigned8	**Visible in:** Standard display
Read permission:	Read drive data or acknowledge messages
Write permission:	Edit device configuration or drive applications
Parameter group:	Dynamic response limits, Jog, Homing, Traversing blocks, Direct setpoint input (MDI)
Unit: -	

Description: Signal to activate jerk limiting.
Activating/deactivating:
- Using c2575 = 1 signal or 0 signal.
- Using the JERK command in the traversing block (only for c2575 = 0 signal).

Dependency: See also: p2574

Note
A change to the signal state is only accepted at zero speed.

p2576 EPOS modulo correction modulo range

Variant:	S200 PTI	
Available when function is active:	Basic positioner	
Data type: FloatingPoint64	**Visible in:** Standard display	
Read permission:	Read drive data or acknowledge messages	
Write permission:	Edit device configuration or drive applications	
Can be changed in the operating state:	Ready for operation	
Parameter group:	Basic parameters / mechanical system, Actual position value preprocessing	
Unit: mm		
Min:	**Max:**	**Factory setting:**
0.000100 [mm]	2.1474828e+09 [mm]	360000.000000 [mm]

Description: Sets the modulo range for axes with modulo correction.

Dependency: See also: c2577

p2576 EPOS modulo correction modulo range

Variant:	S200 PTI	
Available when function is active:	Basic positioner	
Values for:	Basic positioner for rotary motion	
Data type: FloatingPoint64	**Visible in:** Standard display	
Read permission:	Read drive data or acknowledge messages	
Write permission:	Edit device configuration or drive applications	
Can be changed in the operating state:	Ready for operation	
Parameter group:	Basic parameters / mechanical system, Actual position value preprocessing	
Unit: °		
Min:	**Max:**	**Factory setting:**
0.000100 [°]	2.1474828e+09 [°]	360000.000000 [°]

Description: Sets the modulo range for axes with modulo correction.

Dependency: See also: c2577

c2577 EPOS modulo correction activation

Variant:	S200 PTI
Available when function is active:	Basic positioner
Data type: Unsigned8	**Visible in:** Standard display
Read permission:	Read drive data or acknowledge messages
Write permission:	Edit device configuration or drive applications
Parameter group:	Basic parameters / mechanical system, Actual position value preprocessing
Unit: -	

Description: Signal to activate modulo correction.

Dependency: See also: p2576

Note
When the signal state changes, this only becomes effective in the "ready for switching on" state.
Selecting modulo correction:
The actual position setpoint in the modulo range is corrected. The position actual value differs from the position setpoint by the following error and can also leave the modulo range.
Deselecting modulo correction:
It is based on the actual position actual value.

c2578 EPOS negative software limit switch

Variant:	S200 PTI
Available when function is active:	Basic positioner
Data type: FloatingPoint64	**Visible in:** Standard display
Read permission:	Read drive data or acknowledge messages
Write permission:	Edit device configuration or drive applications
Parameter group:	Position limits
Unit: mm	

Description: Signal for the negative software limit switch.

Dependency: See also: c2579, p2580, p2581, c2582

NOTICE
A change to the software limit switch immediately becomes effective.
If the software limit switch is changed, then this results in the positions in the traversing blocks being checked.

Note
The following applies for the setting of the software limit switch:
Negative software limit switch < positive software limit switch

c2578 EPOS negative software limit switch

Variant:	S200 PTI
Available when function is active:	Basic positioner
Values for:	Basic positioner for rotary motion
Data type: FloatingPoint64	**Visible in:** Standard display
Read permission:	Read drive data or acknowledge messages
Write permission:	Edit device configuration or drive applications
Parameter group:	Position limits
Unit: °	

Description: Signal for the negative software limit switch.

Dependency: See also: c2579, p2580, p2581, c2582

NOTICE
A change to the software limit switch immediately becomes effective.
If the software limit switch is changed, then this results in the positions in the traversing blocks being checked.

Note
The following applies for the setting of the software limit switch:
Negative software limit switch < positive software limit switch

c2579 EPOS positive software limit switch

Variant:	S200 PTI
Available when function is active:	Basic positioner
Data type: FloatingPoint64	**Visible in:** Standard display
Read permission:	Read drive data or acknowledge messages
Write permission:	Edit device configuration or drive applications
Parameter group:	Dynamic response limits
Unit: mm	

Description: Signal for the positive setpoint limit switch.

Dependency: See also: c2578, p2580, p2581, c2582

NOTICE
A change to the software limit switch immediately becomes effective.
If the software limit switch is changed, then this results in the positions in the traversing blocks being checked.

Note
The following applies for the setting of the software limit switch:
Negative software limit switch < positive software limit switch

c2579 EPOS positive software limit switch

Variant:	S200 PTI
Available when function is active:	Basic positioner
Values for:	Basic positioner for rotary motion
Data type: FloatingPoint64	**Visible in:** Standard display
Read permission:	Read drive data or acknowledge messages

Write permission: Edit device configuration or drive applications
Parameter group: Dynamic response limits
Unit: °

Description: Signal for the positive setpoint limit switch.

Dependency: See also: c2578, p2580, p2581, c2582

NOTICE
A change to the software limit switch immediately becomes effective. If the software limit switch is changed, then this results in the positions in the traversing blocks being checked.

Note
The following applies for the setting of the software limit switch:
Negative software limit switch < positive software limit switch

p2580 EPOS negative software limit switch

Variant: S200 PTI
Available when function is active: Basic positioner
Data type: FloatingPoint64 **Visible in:** Standard display
Read permission: Read drive data or acknowledge messages
Write permission: Edit device configuration or drive applications
Can be changed in the operating state: Operation
Parameter group: Position limits
Unit: mm

Min:	Max:	Factory setting:
-2.1474828e+09 [mm]	2.1474828e+09 [mm]	-2.1474828e+09 [mm]

Description: Sets the software limit switch, in the negative direction of travel.

Dependency: See also: c2578, c2579, p2581, c2582

p2580 EPOS negative software limit switch

Variant: S200 PTI
Available when function is active: Basic positioner
Values for: Basic positioner for rotary motion
Data type: FloatingPoint64 **Visible in:** Standard display
Read permission: Read drive data or acknowledge messages
Write permission: Edit device configuration or drive applications
Can be changed in the operating state: Operation
Parameter group: Position limits
Unit: °

Min:	Max:	Factory setting:
-2.1474828e+09 [°]	2.1474828e+09 [°]	-2.1474828e+09 [°]

Description: Sets the software limit switch, in the negative direction of travel.

Dependency: See also: c2578, c2579, p2581, c2582

p2581 EPOS positive software limit switch

Variant: S200 PTI
Available when function is active: Basic positioner

Data type: FloatingPoint64	**Visible in:** Standard display	
Read permission:	Read drive data or acknowledge messages	
Write permission:	Edit device configuration or drive applications	
Can be changed in the operating state:	Operation	
Parameter group:	Dynamic response limits	
Unit: mm		
Min:	**Max:**	**Factory setting:**
-2.1474828e+09 [mm]	2.1474828e+09 [mm]	2.1474828e+09 [mm]

Description: Sets the software limit switch, in the positive direction of travel.

Dependency: See also: c2578, c2579, p2580, c2582

p2581 EPOS positive software limit switch

Variant:	S200 PTI	
Available when function is active:	Basic positioner	
Values for:	Basic positioner for rotary motion	
Data type: FloatingPoint64	**Visible in:** Standard display	
Read permission:	Read drive data or acknowledge messages	
Write permission:	Edit device configuration or drive applications	
Can be changed in the operating state:	Operation	
Parameter group:	Dynamic response limits	
Unit: °		
Min:	**Max:**	**Factory setting:**
-2.1474828e+09 [°]	2.1474828e+09 [°]	2.1474828e+09 [°]

Description: Sets the software limit switch, in the positive direction of travel.

Dependency: See also: c2578, c2579, p2580, c2582

c2582 EPOS software limit switch activation

Variant:	S200 PTI
Available when function is active:	Basic positioner
Data type: Unsigned8	**Visible in:** Standard display
Read permission:	Read drive data or acknowledge messages
Write permission:	Edit device configuration or drive applications
Parameter group:	Position limits
Unit: -	

Description: Signal to activate the software limit switch.

Dependency: See also: c2578, c2579, p2580, p2581

⚠ CAUTION

Software limit switch is effective for:
- Axis is homed (r2684.11 = 1) and
- c2582 = 1 signal.

Software limit switch is ineffective for:
- Modulo correction active (c2577 = 1 signal) or
- "Active homing" is executed.

NOTICE
Target position for relative positioning outside software limit switch: The traversing block is started and the axis comes to a standstill at the software limit switch. An appropriate alarm is output and the traversing block is interrupted. Traversing blocks with valid position can be activated. Target position for absolute positioning outside software limit switch: In the "traversing blocks" mode, the traversing block is not started and an appropriate fault is output. Axis outside the valid traversing range: If the axis is already outside the valid traversing range, then an appropriate fault is output. The fault can be acknowledged at standstill. Traversing blocks with valid position can be activated.

Note
The traversing range can also be limited using hardware limit switches.

p2583 EPOS backlash compensation

Variant:	S200 PTI	
Available when function is active:	Basic positioner	
Data type: FloatingPoint32	**Visible in:** Extended display	
Read permission:	Read drive data or acknowledge messages	
Write permission:	Edit device configuration or drive applications	
Can be changed in the operating state:	Operation	
Parameter group:	Basic positioner	
Unit: mm		
Min:	**Max:**	**Factory setting:**
-200000.000000 [mm]	200000.000000 [mm]	0.000000 [mm]

Description:
Sets the amount of play (backlash) for positive or negative play.
0: backlash compensation is deactivated.
> 0: Positive backlash (normal case)
When the direction is reversed, the encoder actual value leads the actual value.
< 0: Negative backlash
When the direction is reversed, the actual value leads the encoder actual value.

Dependency:
If a stationary axis is referenced by "setting the home position", or an adjusted with absolute encoder is switched on, then the setting of c2604 is relevant for entering the compensation value.
c2604 = 1:
Traveling in the positive direction -> A compensation value is immediately entered.
Traveling in the negative direction -> A compensation value is not entered
c2604 = 0:
Traveling in the positive direction -> A compensation value is not entered
Traveling in the negative direction -> A compensation value is immediately entered.
When again setting the home position (a homed axis) or for "passive homing", c2604 is not relevant but instead the history of the axis.
See also: c2604

p2583 EPOS backlash compensation

Variant:	S200 PTI
Available when function is active:	Basic positioner
Values for:	Basic positioner for rotary motion
Data type: FloatingPoint32	**Visible in:** Extended display

Read permission:	Read drive data or acknowledge messages	
Write permission:	Edit device configuration or drive applications	
Can be changed in the operating state:	Operation	
Parameter group:	Basic positioner	
Unit: °		
Min:	**Max:**	**Factory setting:**
-200000.000000 [°]	200000.000000 [°]	0.000000 [°]

Description:

Sets the amount of play (backlash) for positive or negative play.

0: backlash compensation is deactivated.

> 0: Positive backlash (normal case)

When the direction is reversed, the encoder actual value leads the actual value.

< 0: Negative backlash

When the direction is reversed, the actual value leads the encoder actual value.

Dependency:

If a stationary axis is referenced by "setting the home position", or an adjusted with absolute encoder is switched on, then the setting of c2604 is relevant for entering the compensation value.

c2604 = 1:

Traveling in the positive direction -> A compensation value is immediately entered.

Traveling in the negative direction -> A compensation value is not entered

c2604 = 0:

Traveling in the positive direction -> A compensation value is not entered

Traveling in the negative direction -> A compensation value is immediately entered.

When again setting the home position (a homed axis) or for "passive homing", c2604 is not relevant but instead the history of the axis.

See also: c2604

p2584.0...3 EPOS functions configuration

Variant:	S200 PTI	
Available when function is active:	Basic positioner	
Data type: Unsigned32	**Visible in:** Extended display	
Read permission:	Read drive data or acknowledge messages	
Write permission:	Edit device configuration or drive applications	
Can be changed in the operating state:	Ready for operation	
Parameter group:	Basic positioner	
Unit: -		
Min:	**Max:**	**Factory setting:**
-	-	0100 bin

Description:

Sets the configuration for additional functions for the basic positioner (EPOS).

Bit array:

Bit	Signal name	1 signal	0 signal
00	Activate position feedback signal	Yes	No
01	Hardware limit switch evaluation	Level evaluation	Edge evaluation
02	Travel to fixed stop - torque calculation based on the offset	Yes	No
03	Active homing with absolute encoder adjustment	Yes	No

Note
For bit 00:
When the bit is set, for traversing blocks with absolute target positions (p2617[x]) when the tolerance window (p2688) is reached, the traversing block number (p2616[x]) is output bit-coded (r2689).
For bit 01:
When the bit is set, the hardware limit switch is evaluated, level-triggered.
This setting is recommended for a poor position actual value resolution, as in this case the direction does not have to be evaluated.
For bit 02:
When the bit is set, for "Travel to fixed stop", the torque setpoints are calculated based on the offset for the torque limit (p1532).
For bit 03:
After successful active homing, an absolute encoder is adjusted (p2507).

p2585 EPOS jog 1 setpoint velocity

Variant:	S200 PTI	
Available when function is active:	Basic positioner	
Values for:	Basic positioner for rotary motion	
Data type: FloatingPoint32	**Visible in:** Standard display	
Read permission:	Read drive data or acknowledge messages	
Write permission:	Edit device configuration or drive applications	
Can be changed in the operating state:	Operation	
Parameter group:	Jog	
Unit: °/s		
Min:	**Max:**	**Factory setting:**
-4e+07 [°/s]	4e+07 [°/s]	-180.000 [°/s]

Description: Sets the setpoint velocity for jog 1.

Dependency: See also: p2587, c2589, c2591

p2585 EPOS jog 1 setpoint velocity

Variant:	S200 PTI	
Available when function is active:	Basic positioner	
Data type: FloatingPoint32	**Visible in:** Standard display	
Read permission:	Read drive data or acknowledge messages	
Write permission:	Edit device configuration or drive applications	
Can be changed in the operating state:	Operation	
Parameter group:	Jog	
Unit: mm/s		
Min:	**Max:**	**Factory setting:**
-4e+07 [mm/s]	4e+07 [mm/s]	-300.000 [mm/s]

Description: Sets the setpoint velocity for jog 1.

Dependency: See also: p2587, c2589, c2591

p2586 EPOS jog 2 setpoint velocity

Variant:	S200 PTI
Available when function is active:	Basic positioner

Values for:	Basic positioner for rotary motion	
Data type: FloatingPoint32	**Visible in:** Standard display	
Read permission:	Read drive data or acknowledge messages	
Write permission:	Edit device configuration or drive applications	
Can be changed in the operating state:	Operation	
Parameter group:	Jog	
Unit: °/s		
Min:	**Max:**	**Factory setting:**
-4e+07 [°/s]	4e+07 [°/s]	180.000 [°/s]

Description: Sets the setpoint velocity for jog 2.

Dependency: See also: p2588, c2590, c2591

p2586 EPOS jog 2 setpoint velocity

Variant:	S200 PTI	
Available when function is active:	Basic positioner	
Data type: FloatingPoint32	**Visible in:** Standard display	
Read permission:	Read drive data or acknowledge messages	
Write permission:	Edit device configuration or drive applications	
Can be changed in the operating state:	Operation	
Parameter group:	Jog	
Unit: mm/s		
Min:	**Max:**	**Factory setting:**
-4e+07 [mm/s]	4e+07 [mm/s]	300.000 [mm/s]

Description: Sets the setpoint velocity for jog 2.

Dependency: See also: p2588, c2590, c2591

p2587 EPOS jog 1 traversing distance

Variant:	S200 PTI	
Available when function is active:	Basic positioner	
Values for:	Basic positioner for rotary motion	
Data type: FloatingPoint32	**Visible in:** Standard display	
Read permission:	Read drive data or acknowledge messages	
Write permission:	Edit device configuration or drive applications	
Can be changed in the operating state:	Operation	
Parameter group:	Jog	
Unit: °		
Min:	**Max:**	**Factory setting:**
0.000000 [°]	2.1474828e+09 [°]	36.000000 [°]

Description: Sets the traversing distance for incremental jog 1.

Dependency: See also: p2585, c2589, c2591

Note
Incremental jog 1 is started with c2591 = 1 signal and c2589 = 0/1 signal.
With c2589 = 0 signal, incremental jogging is interrupted.

p2587 EPOS jog 1 traversing distance

Variant:	S200 PTI	
Available when function is active:	Basic positioner	
Data type: FloatingPoint32	**Visible in:** Standard display	
Read permission:	Read drive data or acknowledge messages	
Write permission:	Edit device configuration or drive applications	
Can be changed in the operating state:	Operation	
Parameter group:	Jog	
Unit: mm		
Min:	**Max:**	**Factory setting:**
0.000000 [mm]	2.1474828e+09 [mm]	1000.000000 [mm]

Description: Sets the traversing distance for incremental jog 1.

Dependency: See also: p2585, c2589, c2591

Note
Incremental jog 1 is started with c2591 = 1 signal and c2589 = 0/1 signal.
With c2589 = 0 signal, incremental jogging is interrupted.

p2588 EPOS jog 2 traversing distance

Variant:	S200 PTI	
Available when function is active:	Basic positioner	
Values for:	Basic positioner for rotary motion	
Data type: FloatingPoint32	**Visible in:** Standard display	
Read permission:	Read drive data or acknowledge messages	
Write permission:	Edit device configuration or drive applications	
Can be changed in the operating state:	Operation	
Parameter group:	Jog	
Unit: °		
Min:	**Max:**	**Factory setting:**
0.000000 [°]	2.1474828e+09 [°]	36.000000 [°]

Description: Sets the traversing distance for incremental jog 2.

Dependency: See also: p2586, c2590, c2591

Note
Incremental jog 2 is started with c2591 = 1 signal and c2590 = 0/1 signal.
Incremental jogging is interrupted with c2590 = 0 signal.

p2588 EPOS jog 2 traversing distance

Variant:	S200 PTI	
Available when function is active:	Basic positioner	
Data type: FloatingPoint32	**Visible in:** Standard display	
Read permission:	Read drive data or acknowledge messages	
Write permission:	Edit device configuration or drive applications	
Can be changed in the operating state:	Operation	
Parameter group:	Jog	
Unit: mm		

Min:	Max:	Factory setting:
0.000000 [mm]	2.1474828e+09 [mm]	1000.000000 [mm]

Description: Sets the traversing distance for incremental jog 2.

Dependency: See also: p2586, c2590, c2591

Note
Incremental jog 2 is started with c2591 = 1 signal and c2590 = 0/1 signal.
Incremental jogging is interrupted with c2590 = 0 signal.

c2589 EPOS jog 1

Variant: S200 PTI
Available when function is active: Basic positioner
Data type: Unsigned8 **Visible in:** Standard display
Read permission: Read drive data or acknowledge messages
Write permission: Edit device configuration or drive applications
Parameter group: Jog
Unit: -

Description: Signal for jog 1.

Dependency: When jogging, the axis is accelerated or braked with the maximum acceleration/deceleration (p2572/p2573).
c2591 = 0 signal
The axis endlessly moves with the setpoint velocity, jog 1 (p2585).
c2591 = 1 signal
The axis traverses through a parameterized distance (p2585) with the setpoint velocity, jog 1 (p2587).
See also: p2572, p2573, p2585, p2587, c2591

NOTICE
The parameter may be protected as a result of r0922 and cannot be changed.

c2590 EPOS jog 2

Variant: S200 PTI
Available when function is active: Basic positioner
Data type: Unsigned8 **Visible in:** Standard display
Read permission: Read drive data or acknowledge messages
Write permission: Edit device configuration or drive applications
Parameter group: Jog
Unit: -

Description: Signal for jog 2.

Dependency: When jogging, the axis is accelerated or braked with the maximum acceleration/deceleration (p2572/p2573).
c2591 = 0 signal
The axis endlessly moves with the setpoint velocity, jog 2 (p2586).
c2591 = 1 signal
The axis traverses through a parameterized distance (p2586) with the setpoint velocity, jog 2 (p2588).
See also: p2572, p2573, p2586, p2588, c2591

NOTICE
The parameter may be protected as a result of r0922 and cannot be changed.

c2591 EPOS jogging incremental

Variant: S200 PTI

	Available when function is active:	Basic positioner
	Data type: Unsigned8	**Visible in:** Standard display
	Read permission:	Read drive data or acknowledge messages
	Write permission:	Edit device configuration or drive applications
	Parameter group:	Jog
	Unit: -	
Description:	Signal for incremental jogging.	
Dependency:	See also: p2585, p2586, p2587, p2588, c2589, c2590	

c2595 EPOS homing start

	Variant:	S200 PTI
	Available when function is active:	Basic positioner
	Data type: Unsigned8	**Visible in:** Standard display
	Read permission:	Read drive data or acknowledge messages
	Write permission:	Edit device configuration or drive applications
	Parameter group:	Homing
	Unit: -	
Description:	Signal to start "Active homing" or "Passive homing". 0/1 signal edge: Homing is started. 1/0 signal edge: Homing is interrupted.	
Dependency:	See also: c2597, c2598, p2599, r2684	

NOTICE
The parameter may be protected as a result of r0922 and cannot be changed.

Note
Active homing (c2597 = 0 signal):
Active homing can only be activated (0/1 edge) after traversing motion that is being processed has been completed.
With the start, where relevant, the state signal "home position set" (r2684.11) is reset.
Passive homing (c2597 = 1 signal):
With the start, the state signal "home position set" (r2684.11) is not reset.

c2596 EPOS set home position

	Variant:	S200 PTI
	Available when function is active:	Basic positioner
	Data type: Unsigned8	**Visible in:** Standard display
	Read permission:	Read drive data or acknowledge messages
	Write permission:	Edit device configuration or drive applications
	Parameter group:	Homing
	Unit: -	
Description:	Signal for "Set home position".	
Dependency:	See also: c2598, p2599, r2684	

NOTICE
The parameter may be protected as a result of r0922 and cannot be changed.

Note
Home position setting is effective in the following operating states:
- In the basic state.
- For FIXED STOP with progress condition END (corresponds to the initial state).
- For traversing block interrupted via c2640 = 0 signal (intermediate stop).
- For EPOS not enabled and position actual value valid

c2597 EPOS homing type selection

Variant:	S200 PTI
Available when function is active:	Basic positioner
Data type: Unsigned8	**Visible in:** Standard display
Read permission:	Read drive data or acknowledge messages
Write permission:	Edit device configuration or drive applications
Parameter group:	Homing
Unit: -	

Description:
Signal to select homing type.
1 signal: Passive homing
0 signal: Active homing

Dependency:
See also: c2595

Note
Homing is activated as follows:
- Select homing type (c2597)
- Start homing (c2595 = 0/1 signal edge)

c2598[0...3] EPOS home position signal

Variant:	S200 PTI
Available when function is active:	Basic positioner
Data type: FloatingPoint64	**Visible in:** Standard display
Read permission:	Read drive data or acknowledge messages
Write permission:	Edit device configuration or drive applications
Parameter group:	Homing
Unit: mm	

Description:
Signal for the home position.
This value is used as reference for the following homing operations:
- Active homing
- Set home position
- Passive homing
- Absolute value adjustment

Index:
[0] = Position control
[1] = Motor encoder
[2] = Reserved
[3] = Reserved

Dependency:
See also: p2502, p2507, c2595, c2596, c2597, p2599

Note
Absolute encoder:
When adjusting the encoder, the position received is set as the actual axis position.

c2598[0...3] EPOS home position signal

Variant:	S200 PTI
Available when function is active:	Basic positioner
Values for:	Basic positioner for rotary motion
Data type: FloatingPoint64	**Visible in:** Standard display
Read permission:	Read drive data or acknowledge messages
Write permission:	Edit device configuration or drive applications
Parameter group:	Homing
Unit: °	

Description:
Signal for the home position.
This value is used as reference for the following homing operations:
- Active homing
- Set home position
- Passive homing
- Absolute value adjustment

Index:
[0] = Position control
[1] = Motor encoder
[2] = Reserved
[3] = Reserved

Dependency:
See also: p2502, p2507, c2595, c2596, c2597, p2599

Note
Absolute encoder:
When adjusting the encoder, the position received is set as the actual axis position.

p2599 EPOS home position value

Variant:	S200 PTI	
Available when function is active:	Basic positioner	
Data type: FloatingPoint64	**Visible in:** Standard display	
Read permission:	Read drive data or acknowledge messages	
Write permission:	Edit device configuration or drive applications	
Can be changed in the operating state:	Operation	
Parameter group:	Homing	
Unit: mm		
Min:	**Max:**	**Factory setting:**
-2.1474828e+09 [mm]	2.1474828e+09 [mm]	0.000000 [mm]

Description:
Sets the position value for the home position.
This value is set as the actual axis position after homing or adjustment.

Dependency:
See also: p2507, c2595, c2596, c2597, c2598

p2599 EPOS home position value

Variant:	S200 PTI
Available when function is active:	Basic positioner
Values for:	Basic positioner for rotary motion
Data type: FloatingPoint64	**Visible in:** Standard display
Read permission:	Read drive data or acknowledge messages
Write permission:	Edit device configuration or drive applications

Can be changed in the operating state:	Operation	
Parameter group:	Homing	
Unit: °		
Min:	**Max:**	**Factory setting:**
-2.1474828e+09 [°]	2.1474828e+09 [°]	0.000000 [°]

Description: Sets the position value for the home position.
This value is set as the actual axis position after homing or adjustment.

Dependency: See also: p2507, c2595, c2596, c2597, c2598

p2600 EPOS active homing home position offset

Variant:	S200 PTI	
Available when function is active:	Basic positioner	
Data type: FloatingPoint64	**Visible in:** Standard display	
Read permission:	Read drive data or acknowledge messages	
Write permission:	Edit device configuration or drive applications	
Can be changed in the operating state:	Operation	
Parameter group:	Homing	
Unit: mm		
Min:	**Max:**	**Factory setting:**
-2.1474828e+09 [mm]	2.1474828e+09 [mm]	0.000000 [mm]

Description: Sets the home position shift for active homing.

Dependency: See also: c2598

p2600 EPOS active homing home position offset

Variant:	S200 PTI	
Available when function is active:	Basic positioner	
Values for:	Basic positioner for rotary motion	
Data type: FloatingPoint64	**Visible in:** Standard display	
Read permission:	Read drive data or acknowledge messages	
Write permission:	Edit device configuration or drive applications	
Can be changed in the operating state:	Operation	
Parameter group:	Homing	
Unit: °		
Min:	**Max:**	**Factory setting:**
-2.1474828e+09 [°]	2.1474828e+09 [°]	0.000000 [°]

Description: Sets the home position shift for active homing.

Dependency: See also: c2598

c2604 EPOS active homing start direction

Variant:	S200 PTI
Available when function is active:	Basic positioner
Data type: Unsigned8	**Visible in:** Standard display
Read permission:	Read drive data or acknowledge messages
Write permission:	Edit device configuration or drive applications

Parameter group: Homing
Unit: -

Description: Signal for the start direction for active homing.
1 signal: Start in the negative direction.
0 signal: Start in the positive direction.

Dependency: See also: p2583, c2595, c2597

p2605 EPOS active homing approach velocity reference cam

Variant: S200 PTI
Available when function is active: Basic positioner
Values for: Basic positioner for rotary motion
Data type: FloatingPoint32 **Visible in:** Standard display
Read permission: Read drive data or acknowledge messages
Write permission: Edit device configuration or drive applications
Can be changed in the operating state: Operation
Parameter group: Homing
Unit: °/s

Min:	Max:	Factory setting:
0.0001 [°/s]	4e+07 [°/s]	3600.0000 [°/s]

Description: Sets the approach velocity to the reference cam for active homing.

Dependency: Active homing only starts with the approach velocity to the reference cam when there is a reference cam (p2607 = 1).
See also: c2595, c2597, c2604, p2606, p2607

Note
When traversing to the reference cam, the velocity override is effective.
If, at the start of active homing, the axis is already at the reference cam, then the axis immediately starts to traverse to the zero mark.

p2605 EPOS active homing approach velocity reference cam

Variant: S200 PTI
Available when function is active: Basic positioner
Data type: FloatingPoint32 **Visible in:** Standard display
Read permission: Read drive data or acknowledge messages
Write permission: Edit device configuration or drive applications
Can be changed in the operating state: Operation
Parameter group: Homing
Unit: mm/s

Min:	Max:	Factory setting:
0.0001 [mm/s]	4e+07 [mm/s]	5000.0000 [mm/s]

Description: Sets the approach velocity to the reference cam for active homing.

Dependency: Active homing only starts with the approach velocity to the reference cam when there is a reference cam (p2607 = 1).
See also: c2595, c2597, c2604, p2606, p2607

Note
When traversing to the reference cam, the velocity override is effective.
If, at the start of active homing, the axis is already at the reference cam, then the axis immediately starts to traverse to the zero mark.

p2606 EPOS active homing reference cam maximum distance

Variant:	S200 PTI	
Available when function is active:	Basic positioner	
Data type: FloatingPoint64	**Visible in:** Extended display	
Read permission:	Read drive data or acknowledge messages	
Write permission:	Edit device configuration or drive applications	
Can be changed in the operating state:	Operation	
Parameter group:	Homing	
Unit: mm		
Min:	**Max:**	**Factory setting:**
0.000000 [mm]	2.1474828e+09 [mm]	2.1474828e+09 [mm]

Description: Sets the maximum distance after starting active homing when traversing to the reference cam.

Dependency: See also: c2595, c2597, c2604, p2605, p2607

Note
When using a reversing cam, the maximum distance must be set appropriately long.

p2606 EPOS active homing reference cam maximum distance

Variant:	S200 PTI	
Available when function is active:	Basic positioner	
Values for:	Basic positioner for rotary motion	
Data type: FloatingPoint64	**Visible in:** Extended display	
Read permission:	Read drive data or acknowledge messages	
Write permission:	Edit device configuration or drive applications	
Can be changed in the operating state:	Operation	
Parameter group:	Homing	
Unit: °		
Min:	**Max:**	**Factory setting:**
0.000000 [°]	2.1474828e+09 [°]	2.1474828e+09 [°]

Description: Sets the maximum distance after starting active homing when traversing to the reference cam.

Dependency: See also: c2595, c2597, c2604, p2605, p2607

Note
When using a reversing cam, the maximum distance must be set appropriately long.

p2607 EPOS active homing reference cam available

Variant:	S200 PTI	
Available when function is active:	Basic positioner	
Data type: Unsigned8	**Visible in:** Standard display	
Read permission:	Read drive data or acknowledge messages	
Write permission:	Edit device configuration or drive applications	
Can be changed in the operating state:	Operation	
Parameter group:	Homing	
Unit: -		
Min:	**Max:**	**Factory setting:**
0	1	1

Description: Sets whether or not a reference cam is available for active homing.
Value = 1: Reference cam present.
Value = 0: No reference cam present.

Dependency: See also: c2595, c2597, c2604, p2605, p2606

p2608 EPOS active homing approach velocity zero mark

Variant:	S200 PTI	
Available when function is active:	Basic positioner	
Values for:	Basic positioner for rotary motion	
Data type: FloatingPoint32	**Visible in:** Standard display	
Read permission:	Read drive data or acknowledge messages	
Write permission:	Edit device configuration or drive applications	
Can be changed in the operating state:	Operation	
Parameter group:	Homing	
Unit: °/s		
Min:	**Max:**	**Factory setting:**
0.0001 [°/s]	4e+07 [°/s]	900.0000 [°/s]

Description: Sets the approach velocity after detecting the reference cam to search for the zero mark for active homing.

Dependency: If there is no reference cam (p2607 = 0), active homing starts immediately with the axis traversing to the zero mark.
See also: c2595, c2597, c2604, p2607, p2609, p2610

⚠ CAUTION

If the reference cam is not adjusted so that for each active homing the same zero mark for synchronization is detected, then an "incorrect" axis reference point is obtained.
After the reference cam has been left, the search for the zero mark is activated with a time delay due to internal factors. This is the reason that the reference cam should be adjusted in this center between two zero marks and the approach velocity should be adapted to the distance between two zero marks.

Note
The velocity override is not effective when traversing to the zero mark.

p2608 EPOS active homing approach velocity zero mark

Variant:	S200 PTI	
Available when function is active:	Basic positioner	
Data type: FloatingPoint32	**Visible in:** Standard display	
Read permission:	Read drive data or acknowledge messages	
Write permission:	Edit device configuration or drive applications	
Can be changed in the operating state:	Operation	
Parameter group:	Homing	
Unit: mm/s		
Min:	**Max:**	**Factory setting:**
0.0001 [mm/s]	4e+07 [mm/s]	300.0000 [mm/s]

Description: Sets the approach velocity after detecting the reference cam to search for the zero mark for active homing.

Dependency: If there is no reference cam (p2607 = 0), active homing starts immediately with the axis traversing to the zero mark.
See also: c2595, c2597, c2604, p2607, p2609, p2610

⚠ CAUTION

If the reference cam is not adjusted so that for each active homing the same zero mark for synchronization is detected, then an "incorrect" axis reference point is obtained.
After the reference cam has been left, the search for the zero mark is activated with a time delay due to internal factors. This is the reason that the reference cam should be adjusted in this center between two zero marks and the approach velocity should be adapted to the distance between two zero marks.

Note
The velocity override is not effective when traversing to the zero mark.

p2609 EPOS active homing max distance reference cam and zero mark

Variant:	S200 PTI	
Available when function is active:	Basic positioner	
Values for:	Basic positioner for rotary motion	
Data type: FloatingPoint32	**Visible in:** Standard display	
Read permission:	Read drive data or acknowledge messages	
Write permission:	Edit device configuration or drive applications	
Can be changed in the operating state:	Operation	
Parameter group:	Homing	
Unit: °		
Min:	**Max:**	**Factory setting:**
0.000000 [°]	2.1474828e+09 [°]	720.000000 [°]

Description: Sets the maximum distance after leaving the reference cam when traversing to the zero mark.

Dependency: See also: c2595, c2597, c2604, p2607, p2608, p2610

p2609 EPOS active homing max distance reference cam and zero mark

Variant:	S200 PTI	
Available when function is active:	Basic positioner	
Data type: FloatingPoint32	**Visible in:** Standard display	
Read permission:	Read drive data or acknowledge messages	
Write permission:	Edit device configuration or drive applications	
Can be changed in the operating state:	Operation	
Parameter group:	Homing	
Unit: mm		
Min:	**Max:**	**Factory setting:**
0.000000 [mm]	2.1474828e+09 [mm]	20000.000000 [mm]

Description: Sets the maximum distance after leaving the reference cam when traversing to the zero mark.

Dependency: See also: c2595, c2597, c2604, p2607, p2608, p2610

p2610 EPOS active homing tolerance band for distance to zero mark

Variant:	S200 PTI
Available when function is active:	Basic positioner
Data type: FloatingPoint32	**Visible in:** Extended display
Read permission:	Read drive data or acknowledge messages
Write permission:	Edit device configuration or drive applications

Can be changed in the operating state:	Operation	
Parameter group:	Homing	
Unit: mm		
Min:	**Max:**	**Factory setting:**
0.000000 [mm]	2.1474828e+09 [mm]	2.1474828e+09 [mm]

Description: Sets the tolerance bandwidth for the distance to the zero mark

The zero mark is evaluated within the maximum distance between the reference cam and zero mark (p2609) minus the tolerance bandwidth for the distance to the zero mark (p2610).

Dependency: See also: p2609

p2610 EPOS active homing tolerance band for distance to zero mark

Variant:	S200 PTI	
Available when function is active:	Basic positioner	
Values for:	Basic positioner for rotary motion	
Data type: FloatingPoint32	**Visible in:** Extended display	
Read permission:	Read drive data or acknowledge messages	
Write permission:	Edit device configuration or drive applications	
Can be changed in the operating state:	Operation	
Parameter group:	Homing	
Unit: °		
Min:	**Max:**	**Factory setting:**
0.000000 [°]	2.1474828e+09 [°]	2.1474828e+09 [°]

Description: Sets the tolerance bandwidth for the distance to the zero mark

The zero mark is evaluated within the maximum distance between the reference cam and zero mark (p2609) minus the tolerance bandwidth for the distance to the zero mark (p2610).

Dependency: See also: p2609

p2611 EPOS active homing approach velocity home position

Variant:	S200 PTI	
Available when function is active:	Basic positioner	
Values for:	Basic positioner for rotary motion	
Data type: FloatingPoint32	**Visible in:** Standard display	
Read permission:	Read drive data or acknowledge messages	
Write permission:	Edit device configuration or drive applications	
Can be changed in the operating state:	Operation	
Parameter group:	Homing	
Unit: °/s		
Min:	**Max:**	**Factory setting:**
0.0001 [°/s]	4e+07 [°/s]	900.0000 [°/s]

Description: Sets the approach velocity after detecting the zero mark to approach the home position.

Dependency: See also: c2595, c2597, c2604, p2607, p2609, p2610

Note
When traversing to the home position, the velocity override is not effective.

p2611 EPOS active homing approach velocity home position

Variant:	S200 PTI	
Available when function is active:	Basic positioner	
Data type: FloatingPoint32	**Visible in:** Standard display	
Read permission:	Read drive data or acknowledge messages	
Write permission:	Edit device configuration or drive applications	
Can be changed in the operating state:	Operation	
Parameter group:	Homing	
Unit: mm/s		
Min:	**Max:**	**Factory setting:**
0.0001 [mm/s]	4e+07 [mm/s]	300.0000 [mm/s]

Description: Sets the approach velocity after detecting the zero mark to approach the home position.

Dependency: See also: c2595, c2597, c2604, p2607, p2609, p2610

Note
When traversing to the home position, the velocity override is not effective.

c2612[0...1] EPOS active homing reference cam

Variant:	S200 PTI
Available when function is active:	Basic positioner
Data type: Unsigned8	**Visible in:** Standard display
Read permission:	Read drive data or acknowledge messages
Write permission:	Edit device configuration or drive applications
Parameter group:	Homing
Unit: -	

Description: Signal for the reference cam.

Index: [0] = Reference cam selection 1
[1] = Reference cam selection 2

Dependency: See also: p2607

NOTICE
Parameter c2612[0] may be protected as a result of r0922 and cannot be changed.

Note
The selection of reference cam 1 or 2 can be configured using p11550.

c2613 EPOS active homing negative reversing cam

Variant:	S200 PTI
Available when function is active:	Basic positioner
Data type: Unsigned8	**Visible in:** Standard display
Read permission:	Read drive data or acknowledge messages
Write permission:	Edit device configuration or drive applications
Parameter group:	Homing
Unit: -	

Description: Signal for the reversing cam in the negative direction of travel.
1 signal: Reversing cam not reached.
0 signal: Reversing cam reached.

Dependency: See also: c2614

Note
If, during active homing of the positive and negative reversing cam, a 0 signal is detected, then the axis remains at a standstill.

c2614 EPOS active homing positive reversing cam

Variant: S200 PTI
Available when function is active: Basic positioner
Data type: Unsigned8 **Visible in:** Standard display
Read permission: Read drive data or acknowledge messages
Write permission: Edit device configuration or drive applications
Parameter group: Homing
Unit: -

Description:
Signal for the reversing cam in the positive direction of travel.
1 signal: Reversing cam not reached.
0 signal: Reversing cam reached.

Dependency:
See also: c2613

Note
If, during active homing of the positive and negative reversing cam, a 0 signal is detected, then the axis remains at a standstill.

p2615 EPOS maximum number of traversing blocks

Variant: S200 PTI
Available when function is active: Basic positioner
Data type: Unsigned8 **Visible in:** Extended display
Read permission: Read drive data or acknowledge messages
Write permission: Edit device configuration or drive applications
Can be changed in the operating state: Commissioning
Parameter group: Traversing blocks
Unit: -

Min:	Max:	Factory setting:
1	32	32

Description:
Sets the maximum number of traversing blocks that are available.

Dependency:
See also: p2616, p2617, p2618, p2619, p2620, p2621, p2622, p2623

p2616[0...n] EPOS traversing block block number

Variant: S200 PTI
Available when function is active: Basic positioner
Data type: Integer16 **Visible in:** Standard display
Read permission: Read drive data or acknowledge messages
Write permission: Edit device configuration or drive applications
Can be changed in the operating state: Operation
Parameter group: Traversing blocks
Unit: -

Min:	Max:	Factory setting:
-1	31	-1

Description: Sets a block number.
-1: Invalid block number. These blocks are not taken into account.
0 ... 31: Valid block number.

Dependency: The number of indices depends on p2615.
See also: p2615, p2617, p2618, p2619, p2620, p2621, p2622, p2623

p2617[0...n] EPOS traversing block position

Variant:	S200 PTI	
Available when function is active:	Basic positioner	
Data type: FloatingPoint64	**Visible in:** Standard display	
Read permission:	Read drive data or acknowledge messages	
Write permission:	Edit device configuration or drive applications	
Can be changed in the operating state:	Operation	
Parameter group:	Traversing blocks	
Unit: mm		
Min:	**Max:**	**Factory setting:**
-2.1474828e+09 [mm]	2.1474828e+09 [mm]	0.000000 [mm]

Description: Sets the target position for the traversing block.

Dependency: The number of indices depends on p2615.
See also: p2615, p2616, p2618, p2619, p2620, p2621, p2622, p2623

Note
The target position is approached in either relative or absolute terms depending on p2623.

p2617[0...n] EPOS traversing block position

Variant:	S200 PTI	
Available when function is active:	Basic positioner	
Values for:	Basic positioner for rotary motion	
Data type: FloatingPoint64	**Visible in:** Standard display	
Read permission:	Read drive data or acknowledge messages	
Write permission:	Edit device configuration or drive applications	
Can be changed in the operating state:	Operation	
Parameter group:	Traversing blocks	
Unit: °		
Min:	**Max:**	**Factory setting:**
-2.1474828e+09 [°]	2.1474828e+09 [°]	0.000000 [°]

Description: Sets the target position for the traversing block.

Dependency: The number of indices depends on p2615.
See also: p2615, p2616, p2618, p2619, p2620, p2621, p2622, p2623

Note
The target position is approached in either relative or absolute terms depending on p2623.

p2618[0...n] EPOS traversing block velocity

Variant:	S200 PTI
Available when function is active:	Basic positioner
Values for:	Basic positioner for rotary motion

Data type: FloatingPoint32	**Visible in:** Standard display	
Read permission:	Read drive data or acknowledge messages	
Write permission:	Edit device configuration or drive applications	
Can be changed in the operating state:	Operation	
Parameter group:	Traversing blocks	
Unit: °/s		
Min:	**Max:**	**Factory setting:**
0.0001 [°/s]	4e+07 [°/s]	3600.0000 [°/s]

Description: Sets the velocity for the traversing block.

Dependency: The number of indices depends on p2615.
See also: p2615, p2616, p2617, p2619, p2620, p2621, p2622, p2623, c2646

Note
The velocity can be influenced using the velocity override (c2646).

p2618[0...n] EPOS traversing block velocity

Variant:	S200 PTI	
Available when function is active:	Basic positioner	
Data type: FloatingPoint32	**Visible in:** Standard display	
Read permission:	Read drive data or acknowledge messages	
Write permission:	Edit device configuration or drive applications	
Can be changed in the operating state:	Operation	
Parameter group:	Traversing blocks	
Unit: mm/s		
Min:	**Max:**	**Factory setting:**
0.0001 [mm/s]	4e+07 [mm/s]	600.0000 [mm/s]

Description: Sets the velocity for the traversing block.

Dependency: The number of indices depends on p2615.
See also: p2615, p2616, p2617, p2619, p2620, p2621, p2622, p2623, c2646

Note
The velocity can be influenced using the velocity override (c2646).

p2619[0...n] EPOS traversing block acceleration override

Variant:	S200 PTI	
Available when function is active:	Basic positioner	
Data type: FloatingPoint32	**Visible in:** Standard display	
Read permission:	Read drive data or acknowledge messages	
Write permission:	Edit device configuration or drive applications	
Can be changed in the operating state:	Operation	
Parameter group:	Traversing blocks	
Unit: %		
Min:	**Max:**	**Factory setting:**
1.0 [%]	100.0 [%]	100.0 [%]

Description: Sets the acceleration override for the traversing block.
The override refers to the maximum acceleration (p2572).

Dependency: The number of indices depends on p2615.
See also: p2572, p2615, p2616, p2617, p2618, p2620, p2621, p2622, p2623

p2620[0...n] EPOS traversing deceleration override

Variant:	S200 PTI	
Available when function is active:	Basic positioner	
Data type: FloatingPoint32	**Visible in:** Standard display	
Read permission:	Read drive data or acknowledge messages	
Write permission:	Edit device configuration or drive applications	
Can be changed in the operating state:	Operation	
Parameter group:	Traversing blocks	
Unit: %		
Min:	**Max:**	**Factory setting:**
1.0 [%]	100.0 [%]	100.0 [%]

Description: Sets the deceleration override for the traversing block.
The override refers to the maximum deceleration (p2573).

Dependency: The number of indices depends on p2615.
See also: p2573, p2615, p2616, p2617, p2618, p2619, p2621, p2622, p2623

NOTICE
If, when calculating the traversing profile, it is identified that the target position of the next block with the programmed deceleration override will not be reached without direction reversal (flying block change), then the old (actual) deceleration override remains effective.

p2621[0...n] EPOS traversing block task

Variant:	S200 PTI	
Available when function is active:	Basic positioner	
Data type: Integer16	**Visible in:** Standard display	
Read permission:	Read drive data or acknowledge messages	
Write permission:	Edit device configuration or drive applications	
Can be changed in the operating state:	Operation	
Parameter group:	Traversing blocks	
Unit: -		
Min:	**Max:**	**Factory setting:**
1	9	1

Description: Sets the required task for the traversing block.

Value:
1: POSITIONING
2: FIXED STOP
3: ENDLESS_POS
4: ENDLESS_NEG
5: WAITING
6: GOTO
7: SET_O
8: RESET_O
9: JERK

Dependency: The number of indices depends on p2615.
See also: p2615, p2616, p2617, p2618, p2619, p2620, p2622, p2623

p2622[0...n] EPOS traversing block task parameter

Variant:	S200 PTI	
Available when function is active:	Basic positioner	
Data type: Integer32	**Visible in:** Standard display	
Read permission:	Read drive data or acknowledge messages	
Write permission:	Edit device configuration or drive applications	
Can be changed in the operating state:	Operation	
Parameter group:	Traversing blocks	
Unit: -		
Min:	**Max:**	**Factory setting:**
-2147483648	2147483647	0

Description: Sets additional information/data of the appropriate task for the traversing block.

Dependency: The number of indices depends on p2615.
See also: p2615, p2616, p2617, p2618, p2619, p2620, p2621, p2623

Note
The following should be set depending on the task:
FIXED STOP: Clamping torque and clamping force (rotary 0...65536 [0.01 Nm], linear 0...65536 [N])
WAIT: Wait time [ms]
GOTO: Block number
SET_O: 1, 2 or 3 - set direct output 1, 2 or 3 (both)
RESET_O: 1, 2 or 3 - reset direct output 1, 2 or 3 (both)
JERK: 0 - deactivate, 1 - activate

p2623[0...n] EPOS traversing block task mode

Variant:	S200 PTI	
Available when function is active:	Basic positioner	
Data type: Unsigned16	**Visible in:** Standard display	
Read permission:	Read drive data or acknowledge messages	
Write permission:	Edit device configuration or drive applications	
Can be changed in the operating state:	Operation	
Parameter group:	Traversing blocks	
Unit: -		
Min:	**Max:**	**Factory setting:**
0	65535	0

Description: Sets the influence of the task for the traversing block.
Value = 0000 cccc bbbb aaaa
cccc: Positioning mode
cccc = 0000 --> ABSOLUTE
cccc = 0001 --> RELATIVE
cccc = 0010 --> ABS_POS (only for a rotary axis with modulo correction)
cccc = 0011 --> ABS_NEG (only for a rotary axis with modulo correction)
bbbb: Progression condition
bbbb = 0000 --> END
bbbb = 0001 --> CONTINUE_WITH_STOP
bbbb = 0010 --> CONTINUE_FLYING
bbbb = 0011 --> CONTINUE_EXTERNAL
bbbb = 0100 --> CONTINUE_EXTERNAL_WAIT
bbbb = 0101 --> CONTINUE_EXTERNAL_ALARM
aaaa: IDs
aaaa = 000x --> show/hide block (x = 0: show, x = 1: hide)

Dependency: The number of indices depends on p2615.
See also: p2615, p2616, p2617, p2618, p2619, p2620, p2621, p2622

c2625 EPOS traversing block selection bit 0

Variant:	S200 PTI
Available when function is active:	Basic positioner
Data type: Unsigned8	**Visible in:** Standard display
Read permission:	Read drive data or acknowledge messages
Write permission:	Edit device configuration or drive applications
Parameter group:	Traversing blocks
Unit: -	

Description: Signal to select the traversing block, bit 0.

Dependency: Parameters c2625, c2626, c2627, c2628 and c2629 are used to select one of the maximum 64 traversing blocks.
See also: c2626, c2627, c2628, c2629

c2626 EPOS traversing block selection bit 1

Variant:	S200 PTI
Available when function is active:	Basic positioner
Data type: Unsigned8	**Visible in:** Standard display
Read permission:	Read drive data or acknowledge messages
Write permission:	Edit device configuration or drive applications
Parameter group:	Traversing blocks
Unit: -	

Description: Signal to select the traversing block, bit 1.

Dependency: Parameters c2625, c2626, c2627, c2628 and c2629 are used to select one of the maximum 64 traversing blocks.
See also: c2625, c2627, c2628, c2629

c2627 EPOS traversing block selection bit 2

Variant:	S200 PTI
Available when function is active:	Basic positioner
Data type: Unsigned8	**Visible in:** Standard display

Read permission: Read drive data or acknowledge messages
Write permission: Edit device configuration or drive applications
Parameter group: Traversing blocks
Unit: -

Description: Signal to select the traversing block, bit 2.

Dependency: Parameters c2625, c2626, c2627, c2628 and c2629 are used to select one of the maximum 64 traversing blocks.
See also: c2625, c2626, c2628, c2629

c2628 EPOS traversing block selection bit 3

Variant: S200 PTI
Available when function is active: Basic positioner
Data type: Unsigned8 **Visible in:** Standard display
Read permission: Read drive data or acknowledge messages
Write permission: Edit device configuration or drive applications
Parameter group: Traversing blocks
Unit: -

Description: Signal to select the traversing block, bit 3.

Dependency: Parameters c2625, c2626, c2627, c2628 and c2629 are used to select one of the maximum 64 traversing blocks.
See also: c2625, c2626, c2627, c2629

c2629 EPOS traversing block selection bit 4

Variant: S200 PTI
Available when function is active: Basic positioner
Data type: Unsigned8 **Visible in:** Standard display
Read permission: Read drive data or acknowledge messages
Write permission: Edit device configuration or drive applications
Parameter group: Traversing blocks
Unit: -

Description: Signal to select the traversing block, bit 4.

Dependency: Parameters c2625, c2626, c2627, c2628 and c2629 are used to select one of the maximum 64 traversing blocks.
See also: c2625, c2626, c2627, c2628

c2631 EPOS activate traversing task (0 -> 1)

Variant: S200 PTI
Available when function is active: Basic positioner
Data type: Unsigned8 **Visible in:** Standard display
Read permission: Read drive data or acknowledge messages
Write permission: Edit device configuration or drive applications
Parameter group: Traversing blocks
Unit: -

Description: Signal for "Activate traversing task".
c2631 = 0/1 signal
The traversing task, selected using c2625 ... c2629, is started.

Dependency: See also: c2625, c2626, c2627, c2628, c2629, c2640, c2641

NOTICE
The parameter may be protected as a result of r0922 and cannot be changed.

Note
To start a traversing block, the axis must be homed (r2684.11 = 1).
The status signal r2684.12 = 0/1 signal is used for acknowledgment.
A traversing task can be influenced using the following signals:
- Intermediate stop via c2640.
- Reject traversing task via c2641.

p2632 EPOS external block change evaluation

Variant:	S200 PTI	
Available when function is active:	Basic positioner	
Data type: Integer16	**Visible in:** Extended display	
Read permission:	Read drive data or acknowledge messages	
Write permission:	Edit device configuration or drive applications	
Can be changed in the operating state:	Ready for operation	
Parameter group:	Traversing blocks	
Unit: -		
Min:	**Max:**	**Factory setting:**
0	1	0

Description: Sets the mode to evaluate "external block change".

Value:
0: External block change via a measuring probe
1: External block change via c2633

Dependency: See also: p2623, c2633, r2677, r2678

Note
In the mode "external block change via measuring probe" (p2632 = 0), the following applies:
When starting a traversing block with the block change enable CONTINUE_EXTERNAL, CONTINUE_EXTERNAL_WAIT and CONTINUE_EXTERNAL_ALARM, an activated "passive homing" is interrupted.
After ending the block, "Passive homing" must be reactivated using a 0/1 edge in c2595.

c2633 EPOS external block change (0 -> 1)

Variant:	S200 PTI
Available when function is active:	Basic positioner
Data type: Unsigned8	**Visible in:** Extended display
Read permission:	Read drive data or acknowledge messages
Write permission:	Edit device configuration or drive applications
Parameter group:	Traversing blocks
Unit: -	

Description: Signal for the "External block change" for a positive signal edge.

Dependency: The evaluation of the signal is only active p2632 = 1.
See also: p2623, p2632, c2640, c2641, r2677, r2678

NOTICE
The parameter may be protected as a result of r0922 and cannot be changed.

Note
A positive signal edge initiates a flying block change in the subsequent traversing block.
When the external block change is identified, the actual position is saved in r2678.
A traversing task can be influenced using the following signals:
- Intermediate stop via c2640.
- Reject traversing task via c2641.

p2634[0] EPOS fixed stop maximum following error

Variant:	S200 PTI	
Available when function is active:	Basic positioner	
Values for:	Basic positioner for rotary motion	
Data type: FloatingPoint32	**Visible in:** Standard display	
Read permission:	Read drive data or acknowledge messages	
Write permission:	Edit device configuration or drive applications	
Can be changed in the operating state:	Operation	
Parameter group:	Traversing blocks	
Unit: °		
Min:	**Max:**	**Factory setting:**
0.000000 [°]	2.1474828e+09 [°]	36.000000 [°]

Description: Sets the following error to detect the "fixed stop reached" state (r2526.4).

Dependency: See also: r2526, p2621, r2675

Note
The state "fixed stop reached" is detected if the following error exceeds the theoretically calculated following error value by p2634.

p2634[0] EPOS fixed stop maximum following error

Variant:	S200 PTI	
Available when function is active:	Basic positioner	
Data type: FloatingPoint32	**Visible in:** Standard display	
Read permission:	Read drive data or acknowledge messages	
Write permission:	Edit device configuration or drive applications	
Can be changed in the operating state:	Operation	
Parameter group:	Traversing blocks	
Unit: mm		
Min:	**Max:**	**Factory setting:**
0.000000 [mm]	2.1474828e+09 [mm]	1000.000000 [mm]

Description: Sets the following error to detect the "fixed stop reached" state (r2526.4).

Dependency: See also: r2526, p2621, r2675

Note
The state "fixed stop reached" is detected if the following error exceeds the theoretically calculated following error value by p2634.

p2635 EPOS fixed stop monitoring window

Variant:	S200 PTI
Available when function is active:	Basic positioner
Values for:	Basic positioner for rotary motion
Data type: FloatingPoint32	**Visible in:** Standard display
Read permission:	Read drive data or acknowledge messages
Write permission:	Edit device configuration or drive applications
Can be changed in the operating state:	Operation

Parameter group: Traversing blocks

Unit: °

Min:	**Max:**	**Factory setting:**
0.000000 [°]	2.1474828e+09 [°]	3.600000 [°]

Description: Sets the monitoring window of the actual position after the fixed stop is reached.

Dependency: See also: r2526, r2683

Note
If, after the fixed stop is reached, the end stop shifts in either the positive or negative direction by more than the value set here, then r2526.5 is set to 1 and an appropriate message is output.

p2635 EPOS fixed stop monitoring window

Variant: S200 PTI

Available when function is active: Basic positioner

Data type: FloatingPoint32 **Visible in:** Standard display

Read permission: Read drive data or acknowledge messages

Write permission: Edit device configuration or drive applications

Can be changed in the operating state: Operation

Parameter group: Traversing blocks

Unit: mm

Min:	**Max:**	**Factory setting:**
0.000000 [mm]	2.1474828e+09 [mm]	100.000000 [mm]

Description: Sets the monitoring window of the actual position after the fixed stop is reached.

Dependency: See also: r2526, r2683

Note
If, after the fixed stop is reached, the end stop shifts in either the positive or negative direction by more than the value set here, then r2526.5 is set to 1 and an appropriate message is output.

c2640 EPOS intermediate stop (0 signal)

Variant: S200 PTI

Available when function is active: Basic positioner

Data type: Unsigned8 **Visible in:** Standard display

Read permission: Read drive data or acknowledge messages

Write permission: Edit device configuration or drive applications

Parameter group: Traversing blocks, Direct setpoint input (MDI)

Unit: -

Description: Signal for "No intermediate stop/intermediate stop".
1 signal: No intermediate stop
0 signal: Intermediate stop.

Dependency: See also: c2631, c2641

⚠ CAUTION
For c2649 = 1 signal, the following applies:
Motion starts without any explicit control signal.

NOTICE
The parameter may be protected as a result of r0922 and cannot be changed.

Note
This signal is only effective in the modes "traversing blocks" and "direct setpoint input/MDI".
When the intermediate stop is activated, then the axis brakes with the parameterized deceleration (p2620 or c2645).

c2641 EPOS reject traversing task (0 signal)

Variant:	S200 PTI
Available when function is active:	Basic positioner
Data type: Unsigned8	**Visible in:** Standard display
Read permission:	Read drive data or acknowledge messages
Write permission:	Edit device configuration or drive applications
Parameter group:	Traversing blocks, Direct setpoint input (MDI)
Unit: -	

Description:
Signal for "Do not reject traversing task/reject traversing task".
1 signal: Do not reject traversing task.
0 signal: Reject traversing task

Dependency:
See also: c2631, c2640

⚠ CAUTION
For c2649 = 1 signal, the following applies:
Motion starts without any explicit control signal.

NOTICE
The parameter may be protected as a result of r0922 and cannot be changed.

Note
This signal is only effective in the modes "traversing blocks" and "direct setpoint input/MDI".
When activating reject traversing tasks, then the axis brakes with the maximum deceleration (p2573).

c2646 EPOS velocity override

Variant:	S200 PTI
Available when function is active:	Basic positioner
Data type: FloatingPoint32	**Visible in:** Standard display
Read permission:	Read drive data or acknowledge messages
Write permission:	Edit device configuration or drive applications
Parameter group:	Jog, Homing, Traversing blocks, Direct setpoint input (MDI)
Unit: %	

Description:
Signal for the velocity override.
This velocity override is effective in the following operating modes "Direct setpoint input/MDI", "Traversing blocks", "Jogging" and "Active homing" (when approaching a reference cam).

Dependency:
See also: p2571, p2585, p2586, p2605, p2618, r2681

NOTICE
The parameter may be protected as a result of r0922 and cannot be changed.

Note
The effective override (r2681) can differ from the specified override due to limits (e.g. maximum velocity).

c2655[0...1] EPOS select tracking mode

Variant:	S200 PTI
Available when function is active:	Basic positioner

Data type: Unsigned8 **Visible in:** Extended display
Read permission: Read drive data or acknowledge messages
Write permission: Edit device configuration or drive applications
Parameter group: Basic positioner
Unit: -

Description: Signal to select tracking operation.
c2655[0] or c2655[1] = 1 signal
Tracking mode after withdrawing the enable signal.
c2655[0] and c2655[1] = 0 signal
No tracking mode after withdrawing the enable signal.

NOTICE
The parameter may be protected as a result of r0922 and cannot be changed.

Note
For the following events, independent of the signal that is present, the tracking mode is selected:
- After running up.
- After r2526.0 = 0/1 edge.
- While a fault is active.

r2665 EPOS position setpoint

Variant: S200 PTI
Available when function is active: Basic positioner
Data type: FloatingPoint64 **Visible in:** Standard display
Read permission: Read drive data or acknowledge messages
Parameter group: Jog, Homing, Traversing blocks, Direct setpoint input (MDI)
Unit: mm

Description: Displays the actual absolute position setpoint.
Dependency: See also: c2530

Note
As default, c2530 is interconnected with r2665.

r2665 EPOS position setpoint

Variant: S200 PTI
Available when function is active: Basic positioner
Values for: Basic positioner for rotary motion
Data type: FloatingPoint64 **Visible in:** Standard display
Read permission: Read drive data or acknowledge messages
Parameter group: Jog, Homing, Traversing blocks, Direct setpoint input (MDI)
Unit: °

Description: Displays the actual absolute position setpoint.
Dependency: See also: c2530

Note
As default, c2530 is interconnected with r2665.

r2666 EPOS velocity setpoint

Variant: S200 PTI
Available when function is active: Basic positioner

Data type: FloatingPoint32 **Visible in:** Standard display
Read permission: Read drive data or acknowledge messages
Parameter group: Jog, Homing, Traversing blocks, Direct setpoint input (MDI)
Unit: mm/s

Description: Displays the actual velocity setpoint.

Dependency: See also: c2531

Note
As default, c2531 is interconnected with r2666.

r2666 EPOS velocity setpoint

Variant: S200 PTI
Available when function is active: Basic positioner
Values for: Basic positioner for rotary motion
Data type: FloatingPoint32 **Visible in:** Standard display
Read permission: Read drive data or acknowledge messages
Parameter group: Jog, Homing, Traversing blocks, Direct setpoint input (MDI)
Unit: °/s

Description: Displays the actual velocity setpoint.

Dependency: See also: c2531

Note
As default, c2531 is interconnected with r2666.

r2669.0...5 EPOS actual operating mode

Variant: S200 PTI
Available when function is active: Basic positioner
Data type: Unsigned32 **Visible in:** Standard display
Read permission: Read drive data or acknowledge messages
Parameter group: Jog, Homing, Traversing blocks, Direct setpoint input (MDI)
Unit: -

Description: Displays the actual active operating mode.

Bit array:

Bit	Signal name	1 signal	0 signal
00	Jog operating mode	Active	Not active
01	Operating mode active homing	Active	Not active
02	Operating mode traversing blocks	Active	Not active
03	Operating mode positioning for direct setpoint input / MDI	Active	Not active
04	Operating mode setting up for direct setpoint input / MDI	Active	Not active
05	Option passive homing	Active	Not active

Dependency: See also: c2589, c2590, c2595, c2631

r2670.0...15 EPOS status word active traversing block

Variant: S200 PTI
Available when function is active: Basic positioner
Data type: Unsigned32 **Visible in:** Standard display
Read permission: Read drive data or acknowledge messages
Parameter group: Traversing blocks
Unit: -

Description: Displays the status word for the active traversing block.
r2670.0: Active traversing block, bit 0
...
r2670.5: Active traversing block, bit 5
r2670.15: MDI active

Bit array:

Bit	Signal name	1 signal	0 signal
00	Active traversing block bit 0	Active	Not active
01	Active traversing block bit 1	Active	Not active
02	Active traversing block bit 2	Active	Not active
03	Active traversing block bit 3	Active	Not active
04	Active traversing block bit 4	Active	Not active
05	Active traversing block bit 5	Active	Not active
15	MDI active	Active	Not active

Dependency: See also: c2631

Note
For bit 00 ... 05:
Displays the active traversing block in the traversing blocks operating mode.
For bit 15:
For a 1 signal, the operating mode - direct setpoint input/MDI - is active

r2671 EPOS actual position setpoint

Variant: S200 PTI
Available when function is active: Basic positioner
Data type: FloatingPoint64 **Visible in:** Standard display
Read permission: Read drive data or acknowledge messages
Parameter group: Jog, Traversing blocks, Direct setpoint input (MDI)
Unit: mm

Description: Displays the position setpoint presently being processed.

Note
A position of 0 is displayed for non position-related tasks (e.g. ENDLESS_POS, ENDLESS_NEG).

r2671 EPOS actual position setpoint

Variant: S200 PTI
Available when function is active: Basic positioner
Values for: Basic positioner for rotary motion
Data type: FloatingPoint64 **Visible in:** Standard display
Read permission: Read drive data or acknowledge messages
Parameter group: Jog, Traversing blocks, Direct setpoint input (MDI)
Unit: °

Description: Displays the position setpoint presently being processed.

Note
A position of 0 is displayed for non position-related tasks (e.g. ENDLESS_POS, ENDLESS_NEG).

r2672 EPOS actual velocity setpoint

Variant: S200 PTI
Available when function is active: Basic positioner

Data type: FloatingPoint32 **Visible in:** Standard display
Read permission: Read drive data or acknowledge messages
Parameter group: Jog, Homing, Traversing blocks, Direct setpoint input (MDI)
Unit: mm/s

Description: Displays the velocity setpoint presently being processed.

r2672 EPOS actual velocity setpoint

Variant: S200 PTI
Available when function is active: Basic positioner
Values for: Basic positioner for rotary motion
Data type: FloatingPoint32 **Visible in:** Standard display
Read permission: Read drive data or acknowledge messages
Parameter group: Jog, Homing, Traversing blocks, Direct setpoint input (MDI)
Unit: °/s

Description: Displays the velocity setpoint presently being processed.

r2673 EPOS actual acceleration override

Variant: S200 PTI
Available when function is active: Basic positioner
Data type: FloatingPoint32 **Visible in:** Standard display
Read permission: Read drive data or acknowledge messages
Parameter group: Jog, Traversing blocks, Direct setpoint input (MDI)
Unit: %

Description: Displays the acceleration override presently being processed.

Note
An override of 100% is effective in the "Jogging" and "Active homing" operating modes.

r2674 EPOS actual deceleration override

Variant: S200 PTI
Available when function is active: Basic positioner
Data type: FloatingPoint32 **Visible in:** Standard display
Read permission: Read drive data or acknowledge messages
Parameter group: Jog, Traversing blocks, Direct setpoint input (MDI)
Unit: %

Description: Displays the deceleration override presently being processed.

Note
An override of 100% is effective in the "Jogging" and "Active homing" operating modes.

r2675 EPOS actual task

Variant: S200 PTI
Available when function is active: Basic positioner
Data type: Integer16 **Visible in:** Standard display
Read permission: Read drive data or acknowledge messages
Parameter group: Traversing blocks
Unit: -

Description: Display for the task presently being processed.

Value:
0: Inactive
1: POSITIONING
2: FIXED STOP
3: ENDLESS_POS
4: ENDLESS_NEG
5: WAITING
6: GOTO
7: SET_O
8: RESET_O
9: JERK

Dependency: See also: p2621

r2676 EPOS actual task parameter

Variant: S200 PTI
Available when function is active: Basic positioner
Data type: Integer32 **Visible in:** Standard display
Read permission: Read drive data or acknowledge messages
Parameter group: Traversing blocks
Unit: -

Description: Displays the task parameter presently being processed in the "traversing blocks" operating mode.

Dependency: See also: p2622

Note
The following is displayed depending on the task:
FIXED STOP: Clamping torque (0 ... 65536 [0.01 Nm]) or clamping force (0 ... 65536 [N])
WAIT: Wait time [ms]
GOTO: Block number
SET_O: 1, 2, 3 --> direct output 1, 2 or 3 (both) is set
RESET_O: 1, 2, 3 --> direct output 1, 2 or 3 (both) is reset
JERK: 0 --> deactivate, 1 --> activate

r2677 EPOS actual task mode

Variant: S200 PTI
Available when function is active: Basic positioner
Data type: Unsigned16 **Visible in:** Standard display
Read permission: Read drive data or acknowledge messages
Parameter group: Traversing blocks
Unit: -

Description: Displays the task mode presently being processed.

Dependency: See also: p2623

r2678 EPOS external block change actual position

Variant: S200 PTI
Available when function is active: Basic positioner
Data type: FloatingPoint64 **Visible in:** Standard display
Read permission: Read drive data or acknowledge messages

Parameter group: Traversing blocks, Direct setpoint input (MDI)
Unit: mm

Description: Displays the actual position for the following events:
- External block change via measuring probe (p2632 = 0).
- External block change via c2633 (p2632 = 1, c2633 = 0/1 signal).
- Activate traversing task (c2631 = 0/1 signal).

Dependency: See also: c2631, p2632, c2633

r2678 EPOS external block change actual position

Variant: S200 PTI
Available when function is active: Basic positioner
Values for: Basic positioner for rotary motion
Data type: FloatingPoint64 **Visible in:** Standard display
Read permission: Read drive data or acknowledge messages
Parameter group: Traversing blocks, Direct setpoint input (MDI)
Unit: °

Description: Displays the actual position for the following events:
- External block change via measuring probe (p2632 = 0).
- External block change via c2633 (p2632 = 1, c2633 = 0/1 signal).
- Activate traversing task (c2631 = 0/1 signal).

Dependency: See also: c2631, p2632, c2633

r2680 EPOS clearance reference cam and zero mark

Variant: S200 PTI
Available when function is active: Basic positioner
Data type: FloatingPoint32 **Visible in:** Standard display
Read permission: Read drive data or acknowledge messages
Parameter group: Homing
Unit: mm

Description: Display for the distance (clearance) between the reference cam and zero mark.
The value is determined for active homing.

r2680 EPOS clearance reference cam and zero mark

Variant: S200 PTI
Available when function is active: Basic positioner
Values for: Basic positioner for rotary motion
Data type: FloatingPoint32 **Visible in:** Standard display
Read permission: Read drive data or acknowledge messages
Parameter group: Homing
Unit: °

Description: Display for the distance (clearance) between the reference cam and zero mark.
The value is determined for active homing.

r2681 EPOS velocity override effective

Variant: S200 PTI
Available when function is active: Basic positioner

Data type: FloatingPoint32 **Visible in:** Standard display
Read permission: Read drive data or acknowledge messages
Parameter group: Jog, Homing, Traversing blocks, Direct setpoint input (MDI)
Unit: %

Description: Displays the actual effective velocity override.

Dependency: See also: p2571, c2646

Note
The effective override can differ from the specified override due to limits (e.g. p2571, maximum velocity).

r2682 EPOS residual distance to go

Variant: S200 PTI
Available when function is active: Basic positioner
Data type: FloatingPoint64 **Visible in:** Standard display
Read permission: Read drive data or acknowledge messages
Parameter group: Jog, Traversing blocks, Direct setpoint input (MDI)
Unit: mm

Description: Displays the current residual distance.
The remaining distance is the distance to still to be moved through up to the end of the actual positioning task.

Dependency: See also: r2665, r2671, r2678

r2682 EPOS residual distance to go

Variant: S200 PTI
Available when function is active: Basic positioner
Values for: Basic positioner for rotary motion
Data type: FloatingPoint64 **Visible in:** Standard display
Read permission: Read drive data or acknowledge messages
Parameter group: Jog, Traversing blocks, Direct setpoint input (MDI)
Unit: °

Description: Displays the current residual distance.
The remaining distance is the distance to still to be moved through up to the end of the actual positioning task.

Dependency: See also: r2665, r2671, r2678

r2683.0...14 EPOS status word 1

Variant: S200 PTI
Available when function is active: Position control
Data type: Unsigned16 **Visible in:** Standard display
Read permission: Read drive data or acknowledge messages
Parameter group: Control/status words, Jog, Homing, Traversing blocks, Direct setpoint input (MDI), Position monitoring
Unit: -

Description: Display for status word 1 of the basic positioner (EPOS).

Bit array:

Bit	Signal name	1 signal	0 signal
00	Tracking mode active	Yes	No
01	Velocity limiting active	Yes	No
02	Setpoint fixed	Yes	No
03	Set position reached	Yes	No

04	Axis moves forward	Yes	No
05	Axis moves backward	Yes	No
06	Negative software limit switch reached	Yes	No
07	Positive software limit switch reached	Yes	No
10	Direct output 1 via traversing block	Yes	No
11	Direct output 2 via traversing block	Yes	No
12	Fixed stop reached	Yes	No
13	Fixed stop clamping torque reached	Yes	No
14	Travel to fixed stop active	Yes	No

Dependency: See also: r2684

Note
For bit 02, 04, 05, 06, 07:
This signals designate the state after jerk limiting.
For bits 08, 09:
These signals are generated in function "Closed-loop position control".

r2684.0...15 EPOS status word 2

Variant: S200 PTI

Available when function is active: Position control

Data type: Unsigned16 **Visible in:** Standard display

Read permission: Read drive data or acknowledge messages

Parameter group: Position limits, Dynamic response limits, Control/status words, Jog, Homing, Traversing blocks, Direct setpoint input (MDI), Basic parameters / mechanical system, Position monitoring

Unit: -

Description: Display for status word 2 of the basic positioner (EPOS).

Bit array:

Bit	Signal name	1 signal	0 signal
00	Active homing active	Active	Not active
01	Passive homing active	Active	Not active
02	Homing active	Active	Not active
03	Printing mark outside outer window	Yes	No
04	Axis accelerating	Yes	No
05	Axis decelerating	Yes	No
06	Jerk limiting active	Yes	No
07	Activate correction	Yes	No
08	Following error in tolerance	Yes	No
09	Modulo correction active	Yes	No
10	Target position reached	Yes	No
11	Home position set	Yes	No
12	Acknowledgment traversing block activated	Yes	No
13	Negative hardware limit switch reached	Yes	No
14	Positive hardware limit switch reached	Yes	No
15	Traversing command active	Yes	No

Note
For bit 02:
The "homing active" signal is an OR logic operation of "active homing active" and "passive homing active"
For bit 08:
The signal is generated in function "Closed-loop position control".

r2685 EPOS corrective value

Variant: S200 PTI
Available when function is active: Basic positioner
Data type: FloatingPoint64 **Visible in:** Standard display
Read permission: Read drive data or acknowledge messages
Parameter group: Basic positioner
Unit: mm

Description: Display for the correction value of the position actual value.

Dependency: See also: r2684

Note
Using this value, for example, modulo corrections are carried out.

r2685 EPOS corrective value

Variant: S200 PTI
Available when function is active: Basic positioner
Values for: Basic positioner for rotary motion
Data type: FloatingPoint64 **Visible in:** Standard display
Read permission: Read drive data or acknowledge messages
Parameter group: Basic positioner
Unit: °

Description: Display for the correction value of the position actual value.

Dependency: See also: r2684

Note
Using this value, for example, modulo corrections are carried out.

r2686[0...1] EPOS torque limiting effective

Variant: S200 PTI
Available when function is active: Basic positioner
Data type: FloatingPoint32 **Visible in:** Standard display
Read permission: Read drive data or acknowledge messages
Parameter group: Basic positioner
Unit: %

Description: Displays the active torque limit.
r2686[0]:
Displays the active upper torque limiting when traveling to fixed stop.
r2686[1]:
Displays the active lower torque limiting when traveling to fixed stop.

Index: [0] = Upper
[1] = Lower

Dependency: See also: p1520, p1521, r2676

r2687 EPOS torque setpoint

Variant: S200 PTI
Available when function is active: Basic positioner
Data type: FloatingPoint32 **Visible in:** Standard display

	Read permission:	Read drive data or acknowledge messages
	Parameter group:	Traversing blocks
	Unit: Nm	
Description:	Displays the active torque setpoint when reaching the fixed stop.	
Dependency:	See also: p1520, p1521, r2676	

p2688 EPOS position feedback signal tolerance window

Variant:	S200 PTI	
Available when function is active:	Basic positioner	
Values for:	Basic positioner for rotary motion	
Data type: FloatingPoint32	**Visible in:** Extended display	
Read permission:	Read drive data or acknowledge messages	
Write permission:	Edit device configuration or drive applications	
Can be changed in the operating state:	Operation	
Parameter group:	Basic positioner	
Unit: °		
Min:	**Max:**	**Factory setting:**
0.000000 [°]	2.1474828e+09 [°]	1.500000 [°]

Description: Sets the tolerance window for the position feedback signal.

If, for a positioning operation, the actual position (r2521) lies within this tolerance window of the target position, then the traversing block number is displayed in r2689.

Dependency: This parameter is only active when the "Position feedback signal" function is activated (p2584.0 = 1).

See also: p2584, r2689

p2688 EPOS position feedback signal tolerance window

Variant:	S200 PTI	
Available when function is active:	Basic positioner	
Data type: FloatingPoint32	**Visible in:** Extended display	
Read permission:	Read drive data or acknowledge messages	
Write permission:	Edit device configuration or drive applications	
Can be changed in the operating state:	Operation	
Parameter group:	Basic positioner	
Unit: mm		
Min:	**Max:**	**Factory setting:**
0.000000 [mm]	2.1474828e+09 [mm]	40.000000 [mm]

Description: Sets the tolerance window for the position feedback signal.

If, for a positioning operation, the actual position (r2521) lies within this tolerance window of the target position, then the traversing block number is displayed in r2689.

Dependency: This parameter is only active when the "Position feedback signal" function is activated (p2584.0 = 1).

See also: p2584, r2689

r2689[0...1] EPOS position feedback signal display

Variant:	S200 PTI
Available when function is active:	Basic positioner
Data type: Unsigned32	**Visible in:** Extended display

Read permission: Read drive data or acknowledge messages
Parameter group: Basic positioner
Unit: -

Description: Displays the traversing block numbers for position feedback signal.
Here, the block numbers of the traversing blocks are displayed bit-coded whose absolute target positions lie within the tolerance window around the actual position.

Index: [0] = Position feedback signal low
[1] = Position feedback signal high

Dependency: This parameter is only active when the "Position feedback signal" function is activated (p2584.0 = 1).
See also: p2584, p2688

Note
r2689[0]:
Bit-coded display of traversing block numbers 0 to 31
r2689[1]:
Bit-coded display of traversing block numbers 32 to 63

p2720[0].0...2 Load gear configuration

Variant: S200 PTI
Available when function is active: Position control
Data type: Unsigned32 **Visible in:** Standard display
Read permission: Read drive data or acknowledge messages
Write permission: Edit device configuration or drive applications
Can be changed in the operating state: Commissioning
Parameter group: Encoder evaluation, Basic parameters / mechanical system
Unit: -

Min:	Max:	Factory setting:
-	-	0000 bin

Description: Sets the configuration for position tracking for a load gear.

Bit array:

Bit	Signal name	1 signal	0 signal
00	Load gear activate position tracking	Yes	No
02	Load gear reset position	Yes	No

Note
For the following events, the non-volatile, saved position values are automatically reset:
- When an encoder replacement has been identified.
- When changing the configuration of the Encoder Data Set (EDS).
- When adjusting the absolute encoder again.

p2721[0] Load gear rotary absolute encoder revolutions virtual

Variant: S200 PTI
Available when function is active: Position control
Data type: Unsigned32 **Visible in:** Standard display
Read permission: Read drive data or acknowledge messages
Write permission: Edit device configuration or drive applications
Can be changed in the operating state: Commissioning
Parameter group: Encoder evaluation, Basic parameters / mechanical system
Unit: -

Min:	Max:	Factory setting:
0	4194303	0

Description: Sets the number of rotations that can be resolved for a rotary absolute encoder with activated position tracking of the load gear.

Dependency: This parameter is only of significance for an absolute encoder (p0404.1 = 1) with activated position tracking of the load gear (p2720.0 = 1).

Note
The resolution that is set must be able to be represented using r2723.
For rotary axes/modulo axes, the following applies:
This parameter is preset with p0421 when activating position tracking and can be changed.
For linear axes, the following applies:
This parameter is pre-assigned with p0421 when activating position tracking, expanded by 6 bits for multiturn information (maximum number of overflows) and cannot be changed.

p2722[0] Load gear position tracking tolerance window

Variant: S200 PTI
Available when function is active: Position control
Data type: FloatingPoint32 **Visible in:** Standard display
Read permission: Read drive data or acknowledge messages
Write permission: Edit device configuration or drive applications
Can be changed in the operating state: Commissioning
Parameter group: Encoder evaluation, Basic parameters / mechanical system
Unit: -

Min:	Max:	Factory setting:
0.00	4.2949673e+09	0.00

Description: Sets a tolerance window for position tracking.
After the system is switched on, the difference between the saved position and the actual position is determined.
The following response is initiated:
- Difference within the tolerance window: The position is reproduced based on the encoder actual value.
- Difference outside the tolerance window: An appropriate message is output.

⚠ CAUTION
Rotation, for example through a complete encoder range is not detected.

Note
The value is entered in complete encoder pulses.
For p2720.0 = 1, the value is automatically pre-assigned one quarter of the encoder range.
Example:
Quarter of the encoder range = (p0408 * p0421) / 4
It is possible that the tolerance window may not be able to be precisely set due to the data type (floating point number with 23 bit mantissa).

r2723[0] Load gear absolute value

Variant: S200 PTI
Available when function is active: Position control
Data type: Unsigned32 **Visible in:** Standard display
Read permission: Read drive data or acknowledge messages
Parameter group: Encoder evaluation, Basic parameters / mechanical system
Unit: -

Description: Displays the absolute value after the load gear.

NOTICE
The encoder position actual value must be requested using the encoder control word Gn_STW.13.

Note
The increments are displayed in the format the same as Gx_IST2.

r2724[0] Load gear position difference

Variant: S200 PTI
Available when function is active: Position control
Data type: Integer32 **Visible in:** Standard display
Read permission: Read drive data or acknowledge messages
Parameter group: Encoder evaluation, Basic parameters / mechanical system
Unit: -

Description: Displays the position difference before the load gear between switching off and switching on.

Note
The increments are displayed in the format the same as Gx_IST2 or r2723.
If the measuring gearbox of the motor encoder is not activated, the position difference should be read in encoder increments.
If the measuring gear of the motor encoder is activated, the position difference is converted using the measuring gear ratio.

r2741 LR acceleration precontrol value

Variant: S200 PTI
Available when function is active: Position control
Data type: FloatingPoint32 **Visible in:** Standard display
Read permission: Read drive data or acknowledge messages
Parameter group: Position controller
Unit: rev/s²

Description: Displays the acceleration precontrol value.

Note
The acceleration precontrol value is a derivation of the speed precontrol value with respect to time.

p3117 Change safety message type

Variant: S200 PTI
Data type: Unsigned32 **Visible in:** Extended display
Read permission: Read drive data or acknowledge messages
Write permission: Edit device configuration or drive applications
Can be changed in the operating state: Commissioning (Safety Integrated)
Parameter group: Safety Integrated, Faults / alarms
Unit: -

Min:	Max:	Factory setting:
0	1	0

Description: Sets the re-parameterization of all safety messages for faults and alarms.
The relevant message type during changeover is selected by the firmware.
0: Safety messages are not reparameterized (safety message buffer is used, message type C)
1: Safety messages are not reparameterized (safety message buffer is used, message type A or F)

Note
When online safety commissioning has been completed, a change results in an automatic restart.

r3122[0...63].0...20 Diagnostic attribute fault

Data type: Unsigned32 **Visible in:** Extended display
Read permission: Read drive data or acknowledge messages
Parameter group: Faults / alarms
Unit: -

Description: Displays the diagnostic attribute of the fault which has occurred.

Bit array:

Bit	Signal name	1 signal	0 signal
00	Hardware replacement recommended	Yes	No
15	Message has gone	Yes	No
16	PROFIdrive fault class bit 0	High	Low
17	PROFIdrive fault class bit 1	High	Low
18	PROFIdrive fault class bit 2	High	Low
19	PROFIdrive fault class bit 3	High	Low
20	PROFIdrive fault class bit 4	High	Low

Dependency: See also: r0945, r0947, r0948, r0949, r2109, r2130, r2133, r2136

Note
The buffer parameters are cyclically updated in the background (refer to status signal in r2139).
The structure of the fault buffer and the assignment of the indices is shown in r0945.
Bit 20, 19, 18, 17, 16 =
0, 0, 0, 0, 0 --> PROFIdrive message class 0: Not assigned
0, 0, 0, 0, 1 --> PROFIdrive message class 1: Hardware/software fault
0, 0, 0, 1, 0 --> PROFIdrive message class 2: Line fault
0, 0, 0, 1, 1 --> PROFIdrive message class 3: Supply voltage fault
0, 0, 1, 0, 0 --> PROFIdrive message class 4: DC link fault
0, 0, 1, 0, 1 --> PROFIdrive message class 5: Power electronics fault
0, 0, 1, 1, 0 --> PROFIdrive message class 6: Overtemperature, electronics component
0, 0, 1, 1, 1 --> PROFIdrive message class 7: Ground fault/interphase fault detected
0, 1, 0, 0, 0 --> PROFIdrive message class 8: Motor overload
0, 1, 0, 0, 1 --> PROFIdrive message class 9: Communications error to higher-level control
0, 1, 0, 1, 0 --> PROFIdrive message class 10: Safe monitoring channel has identified an error
0, 1, 0, 1, 1 --> PROFIdrive message class 11: Incorrect position actual value/speed actual value or not available
0, 1, 1, 0, 0 --> PROFIdrive message class 12: Internal communications error
0, 1, 1, 0, 1 --> PROFIdrive message class 13: Infeed faulted
0, 1, 1, 1, 0 --> PROFIdrive message class 14: Braking controller / Braking Module faulted
0, 1, 1, 1, 1 --> PROFIdrive message class 15: Line filter faulted
1, 0, 0, 0, 0 --> PROFIdrive message class 16: External measured value/signal state outside the permissible range
1, 0, 0, 0, 1 --> PROFIdrive message class 17: Application/technological function fault
1, 0, 0, 1, 0 --> PROFIdrive message class 18: Error in the parameterization/configuration/commissioning sequence
1, 0, 0, 1, 1 --> PROFIdrive message class 19: General drive fault
1, 0, 1, 0, 0 --> PROFIdrive message class 20: Auxiliary unit faulted

r3123[0...63].0...20 Diagnostic attribute alarm

Data type: Unsigned32 **Visible in:** Extended display
Read permission: Read drive data or acknowledge messages
Parameter group: Faults / alarms
Unit: -

Description: Displays the diagnostic attribute of the alarm which has occurred.

Bit array:

Bit	Signal name	1 signal	0 signal

00	Hardware replacement recommended	Yes	No
11	Alarm class bit 0	High	Low
12	Alarm class bit 1	High	Low
13	Maintenance required	Yes	No
14	Maintenance urgently required	Yes	No
15	Message has gone	Yes	No
16	PROFIdrive fault class bit 0	High	Low
17	PROFIdrive fault class bit 1	High	Low
18	PROFIdrive fault class bit 2	High	Low
19	PROFIdrive fault class bit 3	High	Low
20	PROFIdrive fault class bit 4	High	Low

Dependency: See also: r2122, r2123, r2124, r2125, r2134, r2145, r2146

Note
The buffer parameters are cyclically updated in the background (refer to status signal in r2139).
The structure of the alarm buffer and the assignment of the indices is shown in r2122.
For bit 12, 11:
These status bits are used for the classification of internal alarm classes and are intended for diagnostic purposes only on certain automation systems with integrated SINAMICS functionality.
Bit 20, 19, 18, 17, 16 =
0, 0, 0, 0, 0 --> PROFIdrive message class 0: Not assigned
0, 0, 0, 0, 1 --> PROFIdrive message class 1: Hardware/software fault
0, 0, 0, 1, 0 --> PROFIdrive message class 2: Line fault
0, 0, 0, 1, 1 --> PROFIdrive message class 3: Supply voltage fault
0, 0, 1, 0, 0 --> PROFIdrive message class 4: DC link fault
0, 0, 1, 0, 1 --> PROFIdrive message class 5: Power electronics fault
0, 0, 1, 1, 0 --> PROFIdrive message class 6: Overtemperature, electronics component
0, 0, 1, 1, 1 --> PROFIdrive message class 7: Ground fault/interphase fault detected
0, 1, 0, 0, 0 --> PROFIdrive message class 8: Motor overload
0, 1, 0, 0, 1 --> PROFIdrive message class 9: Communications error to higher-level control
0, 1, 0, 1, 0 --> PROFIdrive message class 10: Safe monitoring channel has identified an error
0, 1, 0, 1, 1 --> PROFIdrive message class 11: Incorrect position actual value/speed actual value or not available
0, 1, 1, 0, 0 --> PROFIdrive message class 12: Internal communications error
0, 1, 1, 0, 1 --> PROFIdrive message class 13: Infeed faulted
0, 1, 1, 1, 0 --> PROFIdrive message class 14: Braking controller / Braking Module faulted
0, 1, 1, 1, 1 --> PROFIdrive message class 15: Line filter faulted
1, 0, 0, 0, 0 --> PROFIdrive message class 16: External measured value/signal state outside the permissible range
1, 0, 0, 0, 1 --> PROFIdrive message class 17: Application/technological function fault
1, 0, 0, 1, 0 --> PROFIdrive message class 18: Error in the parameterization/configuration/commissioning sequence
1, 0, 0, 1, 1 --> PROFIdrive message class 19: General drive fault
1, 0, 1, 0, 0 --> PROFIdrive message class 20: Auxiliary unit faulted

p3234 Delay line voltage failure detection

Data type: Unsigned16 **Visible in:** Extended display
Read permission: Read drive data or acknowledge messages
Write permission: Edit device configuration or drive applications
Can be changed in the operating state: Operation
Parameter group: Load torque monitoring
Unit: ms

Min:	Max:	Factory setting:
0 [ms]	100 [ms]	10 [ms]

Description: Sets the time delay for detecting the line voltage failure.
The function must be activated via p2149.16.

Dependency: See also: p2149
See also: F30265

r3988 Final boot state

Data type: Integer16 **Visible in:** Extended display
Read permission: Read drive data or acknowledge messages
Parameter group: System identification
Unit: -

Description: Displays the final boot states.
001 - Software error
200 - Carry out first commissioning
250 - Topology error (check the connected hardware)
800 - Ready
The following options are available to reach the "Ready" state:
- Check the project and load again.
- Restore factory setting.
- Check the hardware.
- Carry out a POWER ON (switch-off/switch-on).

p4405 PTO maximum output frequency

Data type: FloatingPoint32 **Visible in:** Standard display
Read permission: Read drive data or acknowledge messages
Write permission: Edit device configuration or drive applications
Can be changed in the operating state: Commissioning
Parameter group: Pulse encoder emulation
Unit: kHz

Min:	Max:	Factory setting:
1 [kHz]	5000 [kHz]	1000 [kHz]

Description: Sets the maximum output frequency for encoder emulation.

NOTICE
The hardware is designed for a maximum PTO output frequency of 4 MHz. To tolerate any overshoot as a result of the motor control, p4405 can be set approximately 10 % above 4 MHz.

p4408 PTO pulse number

Data type: Unsigned32 **Visible in:** Standard display
Read permission: Read drive data or acknowledge messages
Write permission: Edit device configuration or drive applications
Can be changed in the operating state: Commissioning
Parameter group: Pulse encoder emulation
Unit: -

Min:	Max:	Factory setting:
0	16777216	1024

Description: Sets the pulse number output from the PTO.

p4409 Gearbox encoder (motor)/PTO denominator (Control Unit)

Data type: Unsigned32 **Visible in:** Standard display
Read permission: Read drive data or acknowledge messages

Write permission: Edit device configuration or drive applications
Can be changed in the operating state: Commissioning
Parameter group: Pulse encoder emulation
Unit: -

Min:	Max:	Factory setting:
1	2147000000	1

Description: Sets the denominator for the gearbox between the encoder and PTO.

Note
This parameter is only of significance for p4408 = 0.
A change only becomes effective after a POWER ON.

p4410 Gearbox encoder (motor)/PTO numerator (Control Unit)

Data type: Unsigned32 **Visible in:** Standard display
Read permission: Read drive data or acknowledge messages
Write permission: Edit device configuration or drive applications
Can be changed in the operating state: Commissioning
Parameter group: Pulse encoder emulation
Unit: -

Min:	Max:	Factory setting:
1	2147000000	1

Description: Sets the numerator for the gearbox between the encoder and PTO.

Note
This parameter is only of significance for p4408 = 0.
A change only becomes effective after a POWER ON.

r4419 PTO diagnostics position setpoint

Data type: Integer32 **Visible in:** Standard display
Read permission: Read drive data or acknowledge messages
Parameter group: Pulse encoder emulation
Unit: -

Description: Displays the position setpoint after taking into account the step up / step down.

c4420 PTO position setpoint

Data type: Unsigned32 **Visible in:** Standard display
Read permission: Read drive data or acknowledge messages
Write permission: Edit device configuration or drive applications
Parameter group: Pulse encoder emulation
Unit: -

Description: Signal for the encoder position setpoint for the incremental encoder emulation.
Recommendation: The position actual value of the leading encoder in the current controller clock cycle is available in r0479.

p4422.0 PTO configuration

Data type: Unsigned16 **Visible in:** Standard display
Read permission: Read drive data or acknowledge messages
Write permission: Edit device configuration or drive applications
Can be changed in the operating state: Commissioning

Parameter group: Pulse encoder emulation
Unit: -

Min:	Max:	Factory setting:
-	-	0000 bin

Description: Settings for Pulse Train Output (PTO).

Bit array:

Bit	Signal name	1 signal	0 signal
00	PTO position actual value	Inverted	Not inverted

Dependency: See also: c4420

p4426 PTO zero mark offset

Data type: Unsigned32 **Visible in:** Standard display
Read permission: Read drive data or acknowledge messages
Write permission: Edit device configuration or drive applications
Can be changed in the operating state: Commissioning
Parameter group: Pulse encoder emulation
Unit: -

Min:	Max:	Factory setting:
0	16777215	0

Description: Sets a zero mark offset to shift the zero mark within one mechanical revolution.
Example:
p0408 = 2048 (encoder pulses)
p4426 = 512 (zero mark offset in pulses)
--> Positive direction: The zero mark is output offset by 512 pulses.
--> Negative direction: The zero mark is output offset by 1536 pulses.

Dependency: See also: p0408

Note
The setting for the zero mark offset (p4426) must be less than the encoder pulse number (p4408).

r4479 PTO diagnostics position actual value

Data type: Integer32 **Visible in:** Standard display
Read permission: Read drive data or acknowledge messages
Parameter group: Pulse encoder emulation
Unit: -

Description: Display for PTO position actual value.

p5271[0].0...7 Real Time / One Button Tuning configuration

Data type: Unsigned16 **Visible in:** Extended display
Read permission: Read drive data or acknowledge messages
Write permission: Edit device configuration or drive applications
Can be changed in the operating state: Ready for operation
Parameter group:
Unit: -

Min:	Max:	Factory setting:
-	-	0000 1100 bin

Description: Sets the configuration for Real Time Tuning / One Button Tuning.

Bit array:

Bit	Signal name	1 signal	0 signal
00	PD controller for large load moments of inertia	Yes	No

01	Reduce gain at low speeds	Yes	No
02	Load adaptation Kp	Yes	No
03	Setting the speed precontrol	Yes	No
04	Setting the torque precontrol	Yes	No
05	Setting the maximum acceleration for the basic positioner	Yes	No
06	Do not change Kp	Yes	No
07	Setting the voltage precontrol	Yes	No

Dependency: See also: p5272, r5274, p5275

Note

For bit 00:

For significant differences between the motor moment of inertia and load moment of inertia - or for a low controller dynamic response - the P controller in the position control loop is transformed into a PD controller. As a consequence, the dynamic performance of the position controller is increased.

This function should only be set when the speed precontrol (bit 3 = 1) or the torque precontrol (bit 4 = 1) is active.

For bit 01:

At low speeds, the controller gain factors are automatically reduced in order to avoid noise and oscillation at standstill.

For bit 02:

The estimated load moment of inertia is taken into account for the speed controller gain.

For bit 03:

Activates the speed precontrol for the basic positioner (EPOS).

For bit 04:

Activation of the torque precontrol for the basic positioner (EPOS); if this is not active, then the internal drive speed/ torque precontrol is parameterized.

For bit 05:

The maximum acceleration (p2572) and maximum deceleration (p2573) for the basic positioner (EPOS) are determined using the estimated moment of inertia. This is only realized once by setting the bit.

Precondition:

The drive pulses are inhibited and the moment of inertia was previously determined.

For bit 06:

The speed controller gain set in p1460 is not changed when calculating the controller data.

For bit 07:

Activation of the voltage precontrol.

p5272[0] Real Time Tuning dynamic factor

Data type: FloatingPoint32 **Visible in:** Extended display

Read permission: Read drive data or acknowledge messages

Write permission: Edit device configuration or drive applications

Can be changed in the operating state: Operation

Parameter group:

Unit: %

Min:	Max:	Factory setting:
5.0 [%]	1000.0 [%]	100.0 [%]

Description: Sets the dynamic factor for the proportional gain of the speed controller for Real Time Tuning.

Dependency: See also: p5271, r5274, p5275

NOTICE
The speed control can become unstable for excessively high values.

Note

The stiffer the mechanical load coupling, the higher the dynamic factor can be set.

r5274 Real Time / One Button Tuning estimated dynamic response

Data type: FloatingPoint32 **Visible in:** Standard display

Read permission: Read drive data or acknowledge messages
Parameter group:
Unit: ms

Description: Display for the estimated dynamic response of the speed control loop as PT1 time constant for Real Time Tuning/One Button Tuning.
This position controller setting is required if the closed-loop position control is in an external control system.

Dependency: See also: p5271, p5272, p5275

p5275[0] Real Time / One Button Tuning dynamic response time constant

Data type: FloatingPoint32 **Visible in:** Extended display
Read permission: Read drive data or acknowledge messages
Write permission: Edit device configuration or drive applications
Can be changed in the operating state: Operation
Parameter group:
Unit: ms

Min:	Max:	Factory setting:
0.0 [ms]	60.0 [ms]	7.5 [ms]

Description: Sets the time constant for the precontrol symmetrization for Real Time Tuning / One Button Tuning.
As a consequence, the drive is allocated a defined, dynamic response via its precontrol.
Examples:
0 ms = travel without following error (Kv factor is infinity)
5 ms = settling behavior as for PT1 with 5 ms (Kv factor = 12 [1000/min])

Dependency: See also: p5271, p5272, r5274

Note
This time constant is only active if p5301.7 is set = 1 or p5302.7 is set = 1.
Otherwise, the precontrol symmetrization is adapted to the estimated dynamic response, therefore setting positioning without any overshoot.
For axes, which must interpolate with one another, the same value must be entered.

r5276[0] Real Time / One Button Tuning maximum Kv factor estimated

Data type: FloatingPoint32 **Visible in:** Standard display
Read permission: Read drive data or acknowledge messages
Parameter group:
Unit: 1000 rpm

Description: Displays the estimated maximum position controller gain for Real Time Tuning / One Button Tuning.

Dependency: See also: p5271, p5272, p5275

⚠ WARNING
The calculation assumes that the DSC is activated in the drive and is controlled on the motor measuring system.
If this is not the case, then excessively high values are displayed.
The value that is displayed does not take into account low-frequency resonance effects in the drive train. If necessary, the value must be significantly reduced.

Note
The value for the closed-loop position control is required by a higher-level control system.

r5277[0] Real Time / One Button Tuning prectr symmetrizing time estimated

Data type: FloatingPoint32 **Visible in:** Standard display
Read permission: Read drive data or acknowledge messages

Parameter group:

Unit: ms

Description: Displays the estimated time constant for symmetrization of the speed precontrol.

This is required to symmetrize the position controller for Real Time Tuning / One Button Tuning if the closed-loop position control is realized in an external control system.

Dependency: See also: p5271, p5272, p5275

> ⚠ **WARNING**
>
> The calculation assumes that the DSC is activated in the drive and is controlled on the motor measuring system. If this is not the case, then the time is not correctly calculated.

p5291.0...16 FFT tuning configuration

Data type: Unsigned32 **Visible in:** Standard display

Read permission: Read drive data or acknowledge messages

Write permission: Edit device configuration or drive applications

Can be changed in the operating state: Operation

Parameter group:

Unit: -

Min:	Max:	Factory setting:
-	-	0000 0000 0000 0000 0000 0000 0011 1001 bin

Description: Sets the configuration for the "FFT tuning" function.

This function is used for One Button Tuning (p5300 = 1).

Bit array:

Bit	Signal name	1 signal	0 signal
00	Noise excitation after pulse enable	Yes	No
01	Set current setpoint filter (HF)	Yes	No
02	Set speed controller gain (HF)	Yes	No
03	Length of FFT window bit 0 (LF, HF)	Yes	No
04	Length of FFT window bit 1 (LF, HF)	Yes	No
05	Windowing the time signals using a Hamming window (LF, HF)	Yes	No
06	Measure current controller	Yes	No
07	Bandwidth bit 0 (LF)	Yes	No
08	Bandwidth bit 1 (LF)	Yes	No
09	Bandwidth bit 2 (LF)	Yes	No
10	Measuring periods bit 0	Yes	No
11	Measuring periods bit 1	Yes	No
12	Inject noise onto speed setpoint	Yes	No
13	Do not reduce Kp for measurement	Yes	No
14	Set the current setpoint filter with loop compensation	Yes	No
16	Torque in front of the current setpoint filter	Yes	No

Dependency: See also: r5293, r5294, r5295, p5296

Note
HF: high frequency
LF: low frequency
For bit 00:
A PRBS signal (pseudo random binary signal) is superimposed on the current setpoint to be able to better identify the mechanical controlled system.
For bit 01:
The identified mechanical resonance points are suppressed using current setpoint filters.
For bit 02:
The maximum speed controller gain is determined from the identified mechanical controlled system.
For bits 03, 04:
The measured value buffer length is set using these bits:
Bit 04 = 0 and bit 03 = 0 -> buffer length = 256
Bit 04 = 0 and bit 03 = 1 -> buffer length = 512
Bit 04 = 1 and bit 03 = 0 -> buffer length = 1024
Bit 04 = 1 and bit 03 = 1 -> buffer length = 2048
For bit 05:
A Hamming window is used to filter the measured time signals.
For bit 06:
The measurement checks the current controller frequency response and this is taken into account in the speed controller loop.
For bits 07, 08, 09:
The measurement bandwidth is set using these bits:
Bit 09 = 0, bit 08 = 0, bit 07 = 0 -> bandwidth = 50 Hz
Bit 09 = 0, bit 08 = 0, bit 07 = 1 -> bandwidth = 100 Hz
Bit 09 = 0, bit 08 = 1, bit 07 = 0 -> bandwidth = 200 Hz
Bit 09 = 0, bit 08 = 1, bit 07 = 1 -> bandwidth = 400 Hz
Bit 09 = 1, bit 08 = 0, bit 07 = 0 -> bandwidth = 800 Hz
Bit 09 = 1, bit 08 = 0, bit 07 = 1 -> bandwidth = 1600 Hz
For bits 10, 11:
Number of measuring periods.
Bit 11 = 0 and bit 10 = 0 -> number of measurements = 1
Bit 11 = 0 and bit 10 = 1 -> number of measurements = 2
Bit 11 = 1 and bit 10 = 0 -> number of measurements = 4
Bit 11 = 1 and bit 10 = 1 -> number of measurements = 8
For bit 12:
The PRBS signal is switched to the speed setpoint (in front of the filter).
For bit 13:
The input signal for the torque actual value is taken from in front of the current setpoints filters.
For bit 14:
For unfavorable mechanical relationships between the motor and load torques, the loop compensation allows the P gain of the speed controller to be increased. This means that the controller has a better control behavior.
Loop compensation with the current setpoint filter is only possible under the following preconditions:
- The motor is connected to the load with zero backlash.
- In the traversing range, the mechanical properties are predominantly constant.

Loop compensation is not applied for a low ratio of load moment of inertia to motor moment of inertia.

p5292 FFT tuning dynamic factor

Data type: FloatingPoint32	**Visible in:** Standard display
Read permission:	Read drive data or acknowledge messages
Write permission:	Edit device configuration or drive applications
Can be changed in the operating state:	Operation

Parameter group:
Unit: %

Min:	**Max:**	**Factory setting:**
25.0 [%]	125.0 [%]	80.0 [%]

Description: Sets the dynamic factor for the proportional gain of the speed controller for FFT tuning.
This function is used for One Button Tuning (p5300 = 1).

Dependency: See also: p5291

r5293 FFT tuning speed controller P gain identified

Data type: FloatingPoint32 **Visible in:** Standard display
Read permission: Read drive data or acknowledge messages
Parameter group:
Unit: Nms/rad

Description: Displays the determined proportional gain Kp of the speed controller before FFT tuning.
This function is used for One Button Tuning (p5300 = 1).

Dependency: See also: p5291

r5294[0...5] FFT tuning zero position identified

Data type: FloatingPoint32 **Visible in:** Extended display
Read permission: Read drive data or acknowledge messages
Parameter group:
Unit: Hz

Description: Displays the identified mechanical zero points.
One Button Tuning must be carried out beforehand (p5300 = 1).

Dependency: See also: p5291

Note
For r5294[0...2]:
Displays the zero positions for the "Load oscillation detection" function (p5301.4 = 1) or "Suppress detected load oscillation" (p5301.5 = 1).
For r5294[3...5]:
Displays the zero positions for the "Set proportional gain Kp" function (p5301.0 = 1) or "Set current setpoint filter" (p5301.1 = 1).

r5295[0...5] FFT tuning pole position identified

Data type: FloatingPoint32 **Visible in:** Extended display
Read permission: Read drive data or acknowledge messages
Parameter group:
Unit: Hz

Description: Displays the identified mechanical pole positions.
One Button Tuning must be carried out beforehand (p5300 = 1).

Dependency: See also: p5291

Note
For r5295[0...2]:
Displays the pole positions for the "Load oscillation detection" function (p5301.4 = 1) or "Suppress detected load oscillation" (p5301.5 = 1).
For r5295[3...5]:
Displays the pole positions for the "Set proportional gain Kp" function (p5301.0 = 1) or "Set current setpoint filter" (p5301.1 = 1).

p5296[0...2] Controller optimization noise amplitude

Data type: FloatingPoint32 **Visible in:** Standard display
Read permission: Read drive data or acknowledge messages
Write permission: Edit device configuration or drive applications
Can be changed in the operating state: Operation
Parameter group:
Unit: %

Min:	Max:	Factory setting:
1.0 [%]	300.0 [%]	[0] 10.0 [%] [1] 30.0 [%] [2] 5.0 [%]

Description: The drive determines the noise amplitude for One Button Tuning and writes the value to p5296.

Dependency: See also: p5291

p5300[0] Autotuning selection

Data type: Integer16 **Visible in:** Standard display
Read permission: Read drive data or acknowledge messages
Write permission: Edit device configuration or drive applications
Can be changed in the operating state: Ready for operation
Parameter group:
Unit: -

Min:	Max:	Factory setting:
-1	2	0

Description: Activating/deactivating autotuning functions "One Button Tuning" and "Real Time Tuning".
For p5300 = 1:
Function "One Button Tuning" is configured using p5271 and p5301.
For p5300 = 2:
Function "Real Time Tuning" is configured using p5302.

Value:
-1: Reset controller parameters
0: Inactive
1: One Button Tuning
2: Real Time Tuning

Dependency: The motor must have already been commissioned so that One Button Tuning functions perfectly.
The "One Button Tuning" function is configured using p5271 and p5301.
The required dynamic performance of the control loop is set in p5292.
The traversing path for the test signal is parameterized in p5308.
Real Time Tuning:
Function "Real Time Tuning" is configured using p5302.
p5272 if the required dynamic response of the control loops is set.
Other relevant parameters: p5271, p5275, r5274
See also: p5271, p5272, r5274, p5275, p5292, r5293, r5294, r5295, p5296, p5301, p5302, p5308, p5309

⚠ CAUTION

For some drive trains, the "Real Time Tuning" function can result in unstable settings (motor makes a whistling sound). This is especially the case for high load moments of inertia, which are coupled to the motor through a low-frequency connection/coupling. In this case, the value in parameter p5272 must be reduced.

Note

For p5300 = -1:

Autotuning is deactivated, and p5300 is automatically set to 0. In addition, the default setting values for the speed and position controller are restored.

For p5300 = 0:

Autotuning is inactive.

To permanently save the values determined for the speed and position controllers, the parameters must be saved in a non-volatile memory (p0977 = 1 or retentively save in the commissioning tool).

For p5300 = 1:

One Button Tuning is active.

The moment of inertia is determined once using a test signal. The controller parameters and current setpoint filters are additionally determined once using a noise signal as excitation source. The steps to be executed can be configured using p5301.

For p5300 = 2:

Real Time Tuning is active.

The moment of inertia is estimated. The controller parameters are recalculated if the moment of inertia noticeably changes. The steps to be executed can be configured using p5302.

p5301[0].0...8 One Button Tuning configuration 2

Data type: Unsigned32	**Visible in:** Standard display	
Read permission:	Read drive data or acknowledge messages	
Write permission:	Edit device configuration or drive applications	
Can be changed in the operating state:	Operation	
Parameter group:		
Unit: -		
Min:	**Max:**	**Factory setting:**
-	-	0000 0000 0000 0111 bin

Description:

Setting the functions for One Button Tuning (p5300 = 1).

A test signal is required for some functions. To do this, observe parameters p5308 and p5309.

Bit array:

Bit	Signal name	1 signal	0 signal
00	Setting the proportional gain Kp	Yes	No
01	Setting current setpoint filter	Yes	No
02	Estimate moment of inertia	Yes	No
07	Activating synchronized axes	Yes	No
08	Moment of inertia determination from frequency response	Yes	No

Dependency:

It is only possible to change the configuration if One Button Tuning is not active (p5300 = 0).

See also: p5292, r5293, r5294, r5295, p5296, p5300, p5308, p5309

Note

For bit 00:

The speed controller gain is determined and set using a noise signal.

For bit 01:

Possibly required current setpoint filters are determined and set using a noise signal.

As a consequence, a higher dynamic performance can be achieved in the speed control loop.

For bit 02:

Using this bit, the moment of inertia is determined using a test signal. If this bit is not set, then the load moment of inertia must be manually set using parameter p1498. The test signal must have been previously set using parameters p5308 and p5309.

For bit 08:

Using this bit, the moment of inertia is determined from the frequency characteristic using a test signal, and is transferred to p1498. The traversing path must first be set using parameter p5308.

p5302[0].2...8 Real Time Tuning configuration

Data type: Unsigned32 **Visible in:** Extended display
Read permission: Read drive data or acknowledge messages
Write permission: Edit device configuration or drive applications
Can be changed in the operating state: Operation
Parameter group:
Unit: -

Min:	Max:	Factory setting:
-	-	0000 0000 0000 1100 bin

Description: Setting the functions for Real Time Tuning (p5300 = 2).

Bit array:

Bit	Signal name	1 signal	0 signal
02	Estimate moment of inertia	Yes	No
03	Configuring the moment of inertia estimator	Cyclic	Once
06	Activating the current setpoint filter adaptation	Yes	No
07	Activating synchronized axes	Yes	No
08	Moment of inertia determination from frequency response	Yes	No

Dependency: It is only possible to change the configuration if autotuning is not active (p5300 = 0).
See also: p5271, p5272, r5274, p5275, p5300

Note
For bit 00:
The speed controller gain is determined and set using a noise signal.
For bit 01:
Possibly required current setpoint filters are determined and set using a noise signal.
As a consequence, a higher dynamic performance can be achieved in the speed control loop.
For bit 02:
Using this bit, the moment of inertia is determined using a test signal. If this bit is not set, then the load moment of inertia must be manually set using parameter p1498. The test signal must be previously set via parameters p5308
and p5309.
For bit 08:
Using this bit, the moment of inertia is determined from the frequency characteristic using a test signal, and is transferred to p1498.
The traversing path must first be set using parameter p5308.

r5306[0].0...14 Autotuning status

Data type: Unsigned16 **Visible in:** Standard display
Read permission: Read drive data or acknowledge messages
Parameter group:
Unit: -

Description: Displays the status of the autotuning functions performed "Real Time Tuning" and "One Button Tuning".
The functions can be activated via p5300.

Bit array:

Bit	Signal name	1 signal	0 signal
00	Proportional gain Kp set	Yes	No
01	Current setpoint filter set	Yes	No
02	Moment of inertia estimation carried out	Yes	No
04	Load vibration detection performed	Yes	No
05	Detected load oscillation set	Yes	No
06	Current setpoint filter adaptation active	Yes	No
07	EPOS set	Yes	No
12	Real Time Tuning active	Yes	No

13	One Button Tuning successfully completed	Yes	No
14	Controller parameters reset due to fault	Yes	No

Dependency: See also: p5300, p5301, p5302

Note
For bit 00 = 1: The speed controller gain was set using One Button Tuning.
For bit 01 = 1: The current setpoint filter was set using One Button Tuning
For bit 02 = 1: The moment of inertia was determined.
For bit 04 = 1: Load oscillation detection was performed using One Button Tuning
For bit 05 = 1: Detected load oscillation suppression was set using One Button Tuning.
For bit 06 = 1: Adaptive resonance filters of the Real Time Tuning are active.
For bit 12 = 1: Real Time Tuning is active and modifies the controller.

p5308[0] One Button Tuning distance limiting

Data type: Integer32 **Visible in:** Standard display
Read permission: Read drive data or acknowledge messages
Write permission: Edit device configuration or drive applications
Can be changed in the operating state: Ready for operation
Parameter group:
Unit: °

Min:	Max:	Factory setting:
-30000 [°]	30000 [°]	0 [°]

Description: Setting the distance limiting (permissible traversing range of the motor).
The traversing range is limited in the positive and negative directions.

Note
A value of 360 degrees corresponds to one motor revolution.
The position before the pulse enable is used as zero point.

p5309[0] One Button Tuning test signal duration

Data type: Unsigned32 **Visible in:** Standard display
Read permission: Read drive data or acknowledge messages
Write permission: Edit device configuration or drive applications
Can be changed in the operating state: Ready for operation
Parameter group:
Unit: ms

Min:	Max:	Factory setting:
0 [ms]	5000 [ms]	2000 [ms]

Description: Sets the test signal sequence duration (several acceleration operations).
This function is used for One Button Tuning (p5300 = 1) to identify the total moment of inertia of the drive train.

Dependency: See also: F07093

p5375[0].0...1 Additional motor overload protection configuration

Data type: Unsigned16 **Visible in:** Extended display
Read permission: Read drive data or acknowledge messages
Write permission: Edit device configuration or drive applications
Can be changed in the operating state: Operation
Parameter group: Motor temperature
Unit: -

Min:	Max:	Factory setting:
-	-	0000 bin

Description: Sets the configuration for additional motor overload protection.

Bit array:

Bit	Signal name	1 signal	0 signal
00	Activate monitoring	Yes	No
01	Activation of speed dependency	Yes	No

Note
To comply with standard UL 61800-5-1 Ed. 2, bit 0 and bit 1 must be set.
These bits activate electronic motor overload protection according to IEC 61800-5-1 Ed. 3 / UL 61800-5-1 Ed. 2, with the emulation of an electronic overload relay, Class 20 and the speed sensitivity.
For bit 00:
This bit activates electronic motor overload protection with emulation of an electronic overload relay, Class 20.
For bit 01:
This bit activates the speed dependency of the electronic motor overload protection. Not active, if bit 00 is also set.

r7700[0...63] Hash value for the integrity of UMAC data

Data type: Unsigned8 **Visible in:** Standard display
Read permission: Read drive data or acknowledge messages
Parameter group:
Unit: -

Description: Display of the hash value for the integrity of UMAC data in the ASCII format (Base64 Encoding)

Note
The index contains the value at the corresponding position in the string

r7727[0] Power unit heat sink fan wear counter

Data type: FloatingPoint32 **Visible in:** Standard display
Read permission: Read drive data or acknowledge messages
Parameter group: Power unit
Unit: %

Description: Displays the wear counter of the heat sink fan in the power unit.

Dependency: See also: A30042

r8400[0...2] Date

Data type: Unsigned16 **Visible in:** Standard display
Read permission: Read drive data or acknowledge messages
Parameter group: Diagnostics general
Unit: -

Description: Displays the actual date in year, month and day.

Index:
[0] = Year (YYYY)
[1] = Month (1 ... 12)
[2] = Day (1 ... 31)

Note
The time in r8400 and r8401 is used to display the fault and alarm times.
The date/time are set using the web server (manually).
When the converter is switched off, date/time are not updated.
After the converter has restarted, the date and time that the converter was in a no-current condition applies.

r8401[0...2] Time

Data type: Unsigned16 **Visible in:** Standard display

Read permission: Read drive data or acknowledge messages
Parameter group: Diagnostics general
Unit: -

Description: Displays the current time in hours, minutes and seconds.

Index: [0] = Hour (0 ... 23)
[1] = Minute (0 ... 59)
[2] = Second (0 ... 59)

Note
The time in r8400 and r8401 is used to display the fault and alarm times.
The time is displayed in the 24-hour format.
The date/time are set using the web server (manually).
When the converter is switched off, date/time are not updated. After POWER ON the instant of the previous power off is valid.

r8600[0...30] PROFIdrive PZD receive Float32

Variant: S200 PTI
Data type: FloatingPoint32 **Visible in:** Standard display
Read permission: Read drive data or acknowledge messages
Parameter group: Receive direction
Unit: -

Description: Displays the PZD (setpoints) in the Float32 format received from the fieldbus controller.

Index:
[0] = PZD 1 + 2
[1] = PZD 2 + 3
[2] = PZD 3 + 4
[3] = PZD 4 + 5
[4] = PZD 5 + 6
[5] = PZD 6 + 7
[6] = PZD 7 + 8
[7] = PZD 8 + 9
[8] = PZD 9 + 10
[9] = PZD 10 + 11
[10] = PZD 11 + 12
[11] = PZD 12 + 13
[12] = PZD 13 + 14
[13] = PZD 14 + 15
[14] = PZD 15 + 16
[15] = PZD 16 + 17
[16] = PZD 17 + 18
[17] = PZD 18 + 19
[18] = PZD 19 + 20
[19] = PZD 20 + 21
[20] = PZD 21 + 22
[21] = PZD 22 + 23
[22] = PZD 23 + 24
[23] = PZD 24 + 25
[24] = PZD 25 + 26
[25] = PZD 26 + 27
[26] = PZD 27 + 28
[27] = PZD 28 + 29
[28] = PZD 29 + 30
[29] = PZD 30 + 31
[30] = PZD 31 + 32

c8601[0...30] PROFIdrive PZD send Float32

Variant:	S200 PTI
Data type: FloatingPoint32	**Visible in:** Standard display
Read permission:	Read drive data or acknowledge messages
Write permission:	Edit device configuration or drive applications
Parameter group:	Send direction
Unit: -	

Description: Displays the PZD (actual values) in the Float32 format that are sent to the fieldbus controller.

Index:
[0] = PZD 1 + 2
[1] = PZD 2 + 3
[2] = PZD 3 + 4
[3] = PZD 4 + 5
[4] = PZD 5 + 6
[5] = PZD 6 + 7
[6] = PZD 7 + 8
[7] = PZD 8 + 9
[8] = PZD 9 + 10
[9] = PZD 10 + 11
[10] = PZD 11 + 12
[11] = PZD 12 + 13
[12] = PZD 13 + 14
[13] = PZD 14 + 15
[14] = PZD 15 + 16
[15] = PZD 16 + 17
[16] = PZD 17 + 18
[17] = PZD 18 + 19
[18] = PZD 19 + 20
[19] = PZD 20 + 21
[20] = PZD 21 + 22
[21] = PZD 22 + 23
[22] = PZD 23 + 24
[23] = PZD 24 + 25
[24] = PZD 25 + 26
[25] = PZD 26 + 27
[26] = PZD 27 + 28
[27] = PZD 28 + 29
[28] = PZD 29 + 30
[29] = PZD 30 + 31
[30] = PZD 31 + 32

c8995[0...3] Ethernet X127 enable

Data type: Unsigned8 **Visible in:** Extended display
Read permission: Read drive data or acknowledge messages
Write permission: Edit other security settings
Parameter group: Configuration
Unit: -

Description:
Signal to enable the Ethernet interface X127 for applications.

Index:
[0] = Secure S7 Protocol Startdrive
[1] = Web server HTTPS
[2] = S7 protocol PCS7
[3] = Web server HTTP

Note
The parameter influences the access from applications.
1 signal:
Ethernet interface X127 is enabled for access.
0 signal:
Ethernet interface X127 is blocked and cannot be accessed.
The signal is not influenced by restoring the factory settings.

p9556 SI transition time SS1 to STO

Variant: S200 PTI
Data type: FloatingPoint32 **Visible in:** Standard display
Read permission: Read drive data or acknowledge messages
Write permission: Edit Safety Integrated application
Can be changed in the operating state: Commissioning (Safety Integrated)
Parameter group: Basic functions
Unit: ms

Min:	Max:	Factory setting:
0.00 [ms]	3.6e+06 [ms]	100.00 [ms]

Description: Sets the transition time from SS1 (Safe Stop 1) to STO (Safe Torque Off).

Note
The set time is rounded internally to an integer multiple of the monitoring clock cycle.

p9603.0 SI control

Variant: S200 PTI
Data type: Unsigned32 **Visible in:** Standard display
Read permission: Read drive data or acknowledge messages
Write permission: Edit Safety Integrated application
Can be changed in the operating state: Commissioning (Safety Integrated)
Parameter group: Safety Integrated
Unit: -

Min:	Max:	Factory setting:
-	-	0001 bin

Description: Sets the type of control for the safety functions integrated in the drive.

Bit array:

Bit	Signal name	1 signal	0 signal
00	Control via F-DI	Enable	Inhibit

Note
When online safety commissioning has been completed, a change results in an automatic restart.

p9604.0...2 SI enable

Variant: S200 PTI
Data type: Unsigned32 **Visible in:** Standard display
Read permission: Read drive data or acknowledge messages
Write permission: Edit Safety Integrated application
Can be changed in the operating state: Commissioning (Safety Integrated)
Parameter group: Safety Integrated
Unit: -

Min:	Max:	Factory setting:
-	-	0001 bin

Description: Sets the enable signal for the safety functions integrated in the drive.

Bit array:

Bit	Signal name	1 signal	0 signal
00	Enable STO	Enable	Inhibit
02	Enable SS1	Enable	Inhibit

p9670 SI module identification drive

Variant: S200 PTI
Data type: Unsigned32 **Visible in:** Extended display
Read permission: Read drive data or acknowledge messages
Write permission: Edit Safety Integrated application
Can be changed in the operating state: Ready for operation
Parameter group: Safety Integrated
Unit: -

Min:	Max:	Factory setting:
0	4294967295	0

Description: Safety Integrated module identifier for the drive.
Replacement of the drive is identified when the safety functions are activated.

Note
After replacement, when the drive runs up, an alarm is output

p9699 SI configuration alarm filtering

Variant: S200 PTI
Data type: Integer16 **Visible in:** Extended display
Read permission: Read drive data or acknowledge messages
Write permission: Edit device configuration or drive applications
Can be changed in the operating state: Ready for operation
Parameter group: Safety Integrated
Unit: -

Min:	Max:	Factory setting:
0	1	1

Description: Sets the enable for the "Alarm filtering" function.

Value:
0: Deactivate alarm filtering
1: Activate alarm filtering

Note
The parameter is active after a POWER ON
Only for internal Siemens use.

r9720.0...7 SI control word

Variant: S200 PTI
Data type: Unsigned32 **Visible in:** Standard display
Read permission: Read drive data or acknowledge messages
Parameter group: Safety Integrated
Unit: -

Description: Control signals for safety functions integrated in the drive.

Bit array:

Bit	Signal name	1 signal	0 signal
00	Deselect STO	Yes	No
01	Deselect SS1	Yes	No
07	Acknowledgment	Signal edge active	No

r9722.0...7 SI status signals

Variant: S200 PTI
Data type: Unsigned32 **Visible in:** Standard display

Read permission: Read drive data or acknowledge messages
Parameter group: Safety Integrated
Unit: -

Description: Displays the status signals of the safety functions (synchronized signal).

Bit array:

Bit	Signal name	1 signal	0 signal
00	STO or safe pulse cancellation active	Yes	No
01	SS1 active	Yes	No
07	Internal event	No	Yes

NOTICE
For bit 07:
An internal event is displayed if a stop function is active.

r9725[0...2] SI diagnostics data cross-check

Variant: S200 PTI
Data type: Unsigned32 **Visible in:** Extended display
Read permission: Read drive data or acknowledge messages
Parameter group: Safety Integrated
Unit: -

Description: Displays the diagnostics of the data cross-check.
For index [0]
Number of the data, which, for the data cross-check between the two monitoring channels, led to the SCF (Safety Channel Failure) on the drive.
For index [1]:
Displays the value from channel A for a KDV error.
For index [2]:
Displays the value from channel B for a KDV error.

Index: [0] = Message value for KDV
[1] = KDV actual value channel A
[2] = KDV actual value channel B

Note
KDV: Data cross-check

r9728 SI actual checksum configuration of the safety functions

Variant: S200 PTI
Data type: Unsigned32 **Visible in:** Extended display
Read permission: Read drive data or acknowledge messages
Parameter group: Safety Integrated
Unit: -

Description: Displays the checksum over the checked parameters used to configure safety functions (actual checksum).

Dependency: See also: p9729

p9729 SI reference checksum configuration of the safety functions

Variant: S200 PTI
Data type: Unsigned32 **Visible in:** Extended display
Read permission: Read drive data or acknowledge messages
Write permission: Edit Safety Integrated application
Can be changed in the operating state: Commissioning (Safety Integrated)

Parameter group: Safety Integrated
Unit: -

Min:	Max:	Factory setting:
0000 hex	FFFF FFFF hex	A1A1 A1A1 hex

Description: Sets the checksum over the checked parameters used to configure safety functions (reference checksum).
Dependency: See also: r9728

r9733[0...2] SI effective setpoint velocity limiting

Variant: S200 PTI
Data type: FloatingPoint32 **Visible in:** Standard display
Read permission: Read drive data or acknowledge messages
Parameter group: Extended functions
Unit: rpm

Description: Displays the necessary velocity speed limit as a result of the selected safety functions.
Contrary to the parameterization of the Safety Integrated limit values, this parameter specifies the motor-side limit value and not the load-side limit value.

Index:
[0] = Setpoint limiting positive
[1] = Setpoint limiting negative
[2] = Setpoint limit absolute

Note
The display in r9733 can be delayed by up to one SI monitoring clock cycle as compared to the display in r9720 and r9722.
When selecting a safety function, where standstill is reached or required (e.g. STO, SS1), then setpoint 0 is specified in r9733.

r9734.0...15 SI Safety Information Channel status word S_ZSW1B

Variant: S200 PTI
Data type: Unsigned16 **Visible in:** Standard display
Read permission: Read drive data or acknowledge messages
Parameter group: Safety Integrated
Unit: -

Description: Displays status word S_ZSW1B for the SIC (Safety Information Channel).

Bit array:

Bit	Signal name	1 signal	0 signal
00	STO selected or active	Yes	No
01	SS1 active	Yes	No
07	Internal event	Yes	No
15	Safety message present	Yes	No

Note
For bit 07:
An internal event is displayed if a stop function is active.

r9750[0...63].0...20 SI diagnostic attributes

Data type: Unsigned32 **Visible in:** Extended display
Read permission: Read drive data or acknowledge messages
Parameter group: Safety Integrated
Unit: -

Description: Displays the diagnostic attributes of the safety messages that have occurred.

Bit array:

Bit	Signal name	1 signal	0 signal
00	Hardware replacement recommended	Yes	No
15	Message has gone	Yes	No

16	PROFIdrive fault class bit 0	High	Low
17	PROFIdrive fault class bit 1	High	Low
18	PROFIdrive fault class bit 2	High	Low
19	PROFIdrive fault class bit 3	High	Low
20	PROFIdrive fault class bit 4	High	Low

Note

The buffer parameters are cyclically updated in the background (refer to status signal in r2139).
The structure of the safety message buffer and the assignment of the indices is shown in r60045.
Bit 20, 19, 18, 17, 16 =
0, 0, 0, 0, 0 --> PROFIdrive message class 0: Not assigned
0, 0, 0, 0, 1 --> PROFIdrive message class 1: Hardware/software fault
0, 0, 0, 1, 0 --> PROFIdrive message class 2: Line fault
0, 0, 0, 1, 1 --> PROFIdrive message class 3: Supply voltage fault
0, 0, 1, 0, 0 --> PROFIdrive message class 4: DC link fault
0, 0, 1, 0, 1 --> PROFIdrive message class 5: Power electronics fault
0, 0, 1, 1, 0 --> PROFIdrive message class 6: Overtemperature, electronics component
0, 0, 1, 1, 1 --> PROFIdrive message class 7: Ground fault/interphase fault detected
0, 1, 0, 0, 0 --> PROFIdrive message class 8: Motor overload
0, 1, 0, 0, 1 --> PROFIdrive message class 9: Communications error to higher-level control
0, 1, 0, 1, 0 --> PROFIdrive message class 10: Safe monitoring channel has identified an error
0, 1, 0, 1, 1 --> PROFIdrive message class 11: Incorrect position actual value/speed actual value or not available
0, 1, 1, 0, 0 --> PROFIdrive message class 12: Internal communications error
0, 1, 1, 0, 1 --> PROFIdrive message class 13: Infeed faulted
0, 1, 1, 1, 0 --> PROFIdrive message class 14: Braking controller / Braking Module faulted
0, 1, 1, 1, 1 --> PROFIdrive message class 15: Line filter faulted
1, 0, 0, 0, 0 --> PROFIdrive message class 16: External measured value/signal state outside the permissible range
1, 0, 0, 0, 1 --> PROFIdrive message class 17: Application/technological function fault
1, 0, 0, 1, 0 --> PROFIdrive message class 18: Error in the parameterization/configuration/commissioning sequence
1, 0, 0, 1, 1 --> PROFIdrive message class 19: General drive fault
1, 0, 1, 0, 0 --> PROFIdrive message class 20: Auxiliary unit faulted

r9753[0...63] SI message value for float values

Variant: S200 PTI
Data type: FloatingPoint32 **Visible in:** Extended display
Read permission: Read drive data or acknowledge messages
Parameter group: Safety Integrated
Unit: -

Description: Displays additional information about the safety message that has occurred for float values.

Dependency: See also: r9754, r9755, r9756, r60044, r60045, r60048, r60049, p60052

r9754[0...63] SI message time received in days

Variant: S200 PTI
Data type: Unsigned16 **Visible in:** Extended display
Read permission: Read drive data or acknowledge messages
Parameter group: Safety Integrated
Unit: -

Description: Displays the relative system runtime in days when the safety message occurred.

Dependency: See also: r9753, r9755, r9756, r60044, r60045, r60048, r60049, p60052

r9755[0...63] SI message time removed in milliseconds

Variant: S200 PTI
Data type: Unsigned32 **Visible in:** Extended display

Read permission: Read drive data or acknowledge messages
Parameter group: Safety Integrated
Unit: ms

Description: Displays the relative system runtime in milliseconds when the safety message was removed.

Dependency: See also: r9753, r9754, r9756, r60044, r60045, r60048, r60049, p60052

r9756[0...63] SI message time removed in days

Variant: S200 PTI
Data type: Unsigned16 **Visible in:** Extended display
Read permission: Read drive data or acknowledge messages
Parameter group: Safety Integrated
Unit: -

Description: Displays the relative system runtime in days when the safety message was removed.

Dependency: See also: r9753, r9754, r9755, r60044, r60045, r60048, r60049, p60052

r9776.0...4 SI diagnostics

Variant: S200 PTI
Data type: Unsigned32 **Visible in:** Standard display
Read permission: Read drive data or acknowledge messages
Parameter group: Safety Integrated
Unit: -

Description: Displays the operating state, referred to the safety functions. The parameter is used for diagnostics.

Bit array:

Bit	Signal name	1 signal	0 signal
00	Safety parameter changed	Yes	No
01	Safety functions enabled	Yes	No
02	Safety component replaced and data save required	Yes	No
03	Safety component replaced and acknowledge/save required	Yes	No
04	Safety commissioning mode active	Yes	No

Note
For bit 00 = 1:
At least one safety parameter was changed. The change only becomes effective after a restart, which is automatically performed after exiting safety commissioning.
For bit 01 = 1:
Safety functions have been enabled and are active.
For bit 02 = 1:
A safety-relevant component was replaced. Saving required (p0977 = 1 or retentively save).
For bit 03 = 1:
A safety-relevant component was replaced. Confirm component replacement using the button in the commissioning tool and then save (p0977 = 1 or retentively save).
For bit 04 = 1:
The safety commissioning mode is selected.

r9780[0...1] SI checksum to check changes

Variant: S200 PTI
Data type: Unsigned32 **Visible in:** Standard display
Read permission: Read drive data or acknowledge messages
Parameter group: Safety Integrated
Unit: -

Description: Displays the checksum to track changes for Safety Integrated.
These are additional checksums that are created to track changes to relevant safety parameters (fingerprint for the "safety logbook" functionality).

Index: [0] = SI checksum to track functional changes
[1] = SI checksum to track hardware-specific changes

Dependency: See also: p9729

r9781[0...1] SI change control time stamp days

Variant: S200 PTI
Data type: Unsigned16 **Visible in:** Standard display
Read permission: Read drive data or acknowledge messages
Parameter group: Safety Integrated
Unit: -

Description: Displays the day component of the time stamp for the checksums for tracking changes for Safety Integrated.
The time stamps are generated for the checksums (r9780[0...1]) (fingerprint for the "safety logbook" functionality)

Index: [0] = SI time stamp for checksum to track functional changes
[1] = SI time stamp for checksum to track hardware-specific changes

Dependency: See also: p9729, p9799

Note
The time comprises r9781 (days) and r9782 (milliseconds).

r9782[0...1] SI change control time stamp milliseconds

Variant: S200 PTI
Data type: Unsigned32 **Visible in:** Standard display
Read permission: Read drive data or acknowledge messages
Parameter group: Safety Integrated
Unit: ms

Description: Displays the millisecond component of the time stamp for the checksums for tracking changes for Safety Integrated.
The time stamps are generated for the checksums (r9780[0...1]) (fingerprint for the "safety logbook" functionality)

Index: [0] = SI time stamp for checksum to track functional changes
[1] = SI time stamp for checksum to track hardware-specific changes

Dependency: See also: p9729, p9799

Note
The time comprises r9781 (days) and r9782 (milliseconds).

r9794 SI actual checksum safety enable

Variant: S200 PTI
Data type: Unsigned32 **Visible in:** Extended display
Read permission: Read drive data or acknowledge messages
Parameter group: Safety Integrated
Unit: -

Description: Displays the checksum over the parameters to enable the safety functions (actual checksum).

Dependency: See also: p9795

p9795 SI reference checksum safety enable

Variant: S200 PTI
Data type: Unsigned32 **Visible in:** Extended display
Read permission: Read drive data or acknowledge messages
Write permission: Edit Safety Integrated application

Can be changed in the operating state:	Commissioning (Safety Integrated)	
Parameter group:	Safety Integrated	
Unit: -		
Min:	**Max:**	**Factory setting:**
0000 hex	FFFF FFFF hex	A1A1 A1A1 hex

Description: Sets the checksum over the parameters for enabling the safety functions (reference checksum).

Dependency: See also: r9794

r9798 SI actual checksum over the drive configuration

Variant:	S200 PTI
Data type: Unsigned32	**Visible in:** Extended display
Read permission:	Read drive data or acknowledge messages
Parameter group:	Safety Integrated
Unit: -	

Description: Displays the checksum over the checksum-checked parameters to configure the drive (actual checksum).

Dependency: See also: p9799

p9799 SI reference checksum over the configuration of the drive

Variant:	S200 PTI	
Data type: Unsigned32	**Visible in:** Extended display	
Read permission:	Read drive data or acknowledge messages	
Write permission:	Edit Safety Integrated application	
Can be changed in the operating state:	Commissioning (Safety Integrated)	
Parameter group:	Safety Integrated	
Unit: -		
Min:	**Max:**	**Factory setting:**
0000 hex	FFFF FFFF hex	A1A1 A1A1 hex

Description: Sets the checksum over the checksum-checked parameters to configure the drive (reference checksum).

Dependency: See also: r9798

r9828 SI actual checksum configuration of safety functions channel B

Variant:	S200 PTI
Data type: Unsigned32	**Visible in:** Extended display
Read permission:	Read drive data or acknowledge messages
Parameter group:	Safety Integrated
Unit: -	

Description: Displays the checksum over the checksum-checked parameters to configure safety functions (actual checksum) channel B.

Dependency: See also: p9829

p9829 SI reference checksum configuration of safety functions chan. B

Variant:	S200 PTI
Data type: Unsigned32	**Visible in:** Extended display
Read permission:	Read drive data or acknowledge messages
Write permission:	Edit Safety Integrated application
Can be changed in the operating state:	Commissioning (Safety Integrated)

Parameter group: Safety Integrated
Unit: -

Min:	Max:	Factory setting:
0000 hex	FFFF FFFF hex	B2B2 B2B2 hex

Description: Sets the checksum over the checked parameters used to configure safety functions (reference checksum).
Dependency: See also: r9828

r9894 SI actual checksum safety enable channel B

Variant: S200 PTI
Data type: Unsigned32 **Visible in:** Extended display
Read permission: Read drive data or acknowledge messages
Parameter group: Safety Integrated
Unit: -

Description: Displays the checksum over the parameters to enable the safety functions (actual checksum) channel B.
Dependency: See also: p9895

p9895 SI reference checksum safety enable channel B

Variant: S200 PTI
Data type: Unsigned32 **Visible in:** Extended display
Read permission: Read drive data or acknowledge messages
Write permission: Edit Safety Integrated application
Can be changed in the operating state: Commissioning (Safety Integrated)
Parameter group: Safety Integrated
Unit: -

Min:	Max:	Factory setting:
0000 hex	FFFF FFFF hex	B2B2 B2B2 hex

Description: Sets the checksum over the parameters for enabling the safety functions (reference checksum) channel B.
Dependency: See also: r9894

r9898 SI actual checksum configuration of the drive, channel B

Variant: S200 PTI
Data type: Unsigned32 **Visible in:** Extended display
Read permission: Read drive data or acknowledge messages
Parameter group: Safety Integrated
Unit: -

Description: Displays the checksum over the checksum-checked parameters to configure the drive (actual checksum) channel B.
Dependency: See also: p9899

p9899 SI reference checksum over the drive configuration, channel B

Variant: S200 PTI
Data type: Unsigned32 **Visible in:** Extended display
Read permission: Read drive data or acknowledge messages
Write permission: Edit Safety Integrated application
Can be changed in the operating state: Commissioning (Safety Integrated)
Parameter group: Safety Integrated
Unit: -

Min:	Max:	Factory setting:
0000 hex	FFFF FFFF hex	B2B2 B2B2 hex

Description: Sets the checksum over the checksum-checked parameters to configure the drive (reference checksum) channel B.

Dependency: See also: r9898

p10000.0 SI F-DI enable

Variant: S200 PTI

Data type: Unsigned8 **Visible in:** Standard display

Read permission: Read drive data or acknowledge messages

Write permission: Edit Safety Integrated application

Can be changed in the operating state: Commissioning (Safety Integrated)

Parameter group: Safety Integrated

Unit: -

Min:	Max:	Factory setting:
-	-	0001 bin

Description: Sets the enable signal for the failsafe digital inputs.

Bit array:

Bit	Signal name	1 signal	0 signal
00	F-DI 0 (X131.1/2, X131.5/6)	Enabled	Not enabled

Note
F-DI that have been enabled are monitored in a safety-relevant way. It is neither permissible that the associated DI are set to simulation nor used as non-safety-related functions, as they can be subject to test pulses.

p10002 SI F-DI changeover discrepancy time

Variant: S200 PTI

Data type: FloatingPoint32 **Visible in:** Standard display

Read permission: Read drive data or acknowledge messages

Write permission: Edit Safety Integrated application

Can be changed in the operating state: Commissioning (Safety Integrated)

Parameter group: Safety Integrated

Unit: ms

Min:	Max:	Factory setting:
1.00 [ms]	2000.00 [ms]	500.00 [ms]

Description: Sets the discrepancy time for digital inputs.
The signal states at the two associated digital inputs (F-DI) must assume the same state within this discrepancy time.

Note
The time must be set longer than the SI monitoring clock cycle.

p10017[0...2] SI digital inputs input filter

Variant: S200 PTI

Data type: FloatingPoint32 **Visible in:** Standard display

Read permission: Read drive data or acknowledge messages

Write permission: Edit Safety Integrated application

Can be changed in the operating state: Commissioning (Safety Integrated)

Parameter group: Safety Integrated

Unit: ms

Min:	Max:	Factory setting:
1.00 [ms]	100.00 [ms]	4.00 [ms]

Description:
Setting the input filter for the digital inputs.
The input filter is rounded off to whole milliseconds and accepted.
The input filter acts on the following digital inputs:
- Failsafe digital inputs (F-DI).

Example:
Input filter = 1 ms: Fault pulses of 1 ms are filtered; only pulses longer than 2 ms are processed.
Input filter = 3 ms: Fault pulses of 3 ms are filtered; only pulses longer than 4 ms are processed.
The input filtering result can be read in r10051 and r10151.
The set input filter impacts the response time of the safety function.

Index:
[0] = F-DI 0
[1] = Reserved
[2] = Reserved

NOTICE
The maximum length of cables that are connected to a fail-safe digital input is 30 m.

Note
If the self test is enabled using externally specified dark pulses (p10041 = 3) for at least one F-DI, then p10017 must be set longer than the maximum duration of the dark pulses + 2 ms. If the test pulses are specified using the switchable power supply (p10041 = 1), then this means p10017 > p10018 + 2 ms.

p10018 SI F-DI self test length dark pulses VS+

Variant:	S200 PTI
Data type: FloatingPoint32	**Visible in:** Standard display
Read permission:	Read drive data or acknowledge messages
Write permission:	Edit Safety Integrated application
Can be changed in the operating state:	Commissioning (Safety Integrated)
Parameter group:	Safety Integrated
Unit: ms	

Min:	Max:	Factory setting:
0 [ms]	50 [ms]	0 [ms]

Description:
Sets the dark pulse length of the switchable power supply for the self test using specified dark pulses (p10041) of the F-DI.
Value = 0: switchable power supply, permanently switched on.
Value > 0: dark pulse length for the switchable power supply. The test cycle is fixed at 5 s.

Note
The dark pulses of the switchable power supply are only enabled for the self test using specified dark pulses (p10041 = 1).
The switchable power supply is continuously switched on if another self test was set

p10019 SI F-DI self test external dark pulses wait time

Variant:	S200 PTI
Data type: FloatingPoint32	**Visible in:** Standard display
Read permission:	Read drive data or acknowledge messages
Write permission:	Edit Safety Integrated application
Can be changed in the operating state:	Commissioning (Safety Integrated)

Parameter group: Safety Integrated
Unit: s

Min:	Max:	Factory setting:
10 [s]	3600 [s]	1020 [s]

Description: Sets the maximum wait time for the dark pulses for the F-DI self test using an externally specified test pulses.

Note
This parameter is only active for F-DIs that are tested using external test pulses (p10041[x] = 3).

c10022 SI STO input terminal

Variant: S200 PTI
Data type: Unsigned8 **Visible in:** Standard display
Read permission: Read drive data or acknowledge messages
Write permission: Edit Safety Integrated application
Parameter group: Safety Integrated
Unit: -

Description: Signal for the axis-specific selection of function "STO (Safe Torque Off)" (control via F-DI).

Note
F-DI: Failsafe Digital Input

c10023 SI SS1 input terminal

Variant: S200 PTI
Data type: Unsigned8 **Visible in:** Standard display
Read permission: Read drive data or acknowledge messages
Write permission: Edit Safety Integrated application
Parameter group: Safety Integrated
Unit: -

Description: Signal for selecting function "SS1 (Safe Stop 1)".

Note
F-DI: Failsafe Digital Input

p10040.0 SI F-DI input mode

Variant: S200 PTI
Data type: Unsigned8 **Visible in:** Standard display
Read permission: Read drive data or acknowledge messages
Write permission: Edit Safety Integrated application
Can be changed in the operating state: Commissioning (Safety Integrated)
Parameter group: Safety Integrated
Unit: -

Min:	Max:	Factory setting:
-	-	0000 bin

Description: Sets the input mode for the safety digital inputs (F-DI).

Bit array:

Bit	Signal name	1 signal	0 signal
00	F-DI 0, DI 11+ (X131.5/6)	NO contact	NC contact

p10041[0...2] SI F-DI self test mode selection

Variant: S200 PTI
Data type: Integer16 **Visible in:** Standard display

Read permission: Read drive data or acknowledge messages
Write permission: Edit Safety Integrated application
Can be changed in the operating state: Commissioning (Safety Integrated)
Parameter group: Safety Integrated
Unit: -

Min:	Max:	Factory setting:
0	3	0

Description: Enable for the F-DI self test.

Value:
0: Self test using internal test signals
1: Self test using specified dark pulses (VS+)
3: Self test using externally specified dark pulses

Index:
[0] = F-DI 0
[1] = Reserved
[2] = Reserved

Note
Mode 1:
A check is made whether p10017 is > p10018 + 2 ms and whether p10018 is set > 0.

r10051.0 SI digital inputs status channel A

Variant: S200 PTI
Data type: Unsigned8 **Visible in:** Standard display
Read permission: Read drive data or acknowledge messages
Parameter group: Safety Integrated
Unit: -

Description: Display for the single-channel, logical and debounced status of the failsafe digital inputs of channel A.

Bit array:

Bit	Signal name	1 signal	0 signal
00	Status of DI 10+ (X131.1/2)	Logical 1	Logical 0

Dependency: See also: p10017

Note
The relationship between the logic level and the external voltage level at the input is intended for the use of a safety function:
Normally closed contacts have for
- 0 V at the input, a logical signal level of "0".
- 24 V at the input, a logical signal level of "1".
As a consequence, for an NC/NC contact parameterization for
- 0 V at both inputs of the F-DI results in a status of the F-DI equal to "0" (safety function selected),
- 24 V at both inputs of the F-DI results in a status of the F-DI equal to "1" (safety function selected),

F-DI: Failsafe Digital Input

r10071.0 SI F-DI status

Variant: S200 PTI
Data type: Unsigned8 **Visible in:** Standard display
Read permission: Read drive data or acknowledge messages
Parameter group: Safety Integrated
Unit: -

Description: Display for the status of the failsafe digital inputs.

Bit array:

Bit	Signal name	1 signal	0 signal
00	Status of the F-DI 0	Logical 1	Logical 0

Note
The following applies:
- Logical "0": Safety function is selected
- Logical "1": safety function is deselected

F-DI: Failsafe Digital Input

r10080.0...7 SI status signals channel A

Variant: S200 PTI
Data type: Unsigned32 **Visible in:** Extended display
Read permission: Read drive data or acknowledge messages
Parameter group: Safety Integrated
Unit: -

Description: Status signals (channel A) for safety-relevant motion monitoring functions integrated in the drive.

Bit array:

Bit	Signal name	1 signal	0 signal
00	STO or safe pulse cancellation active	Yes	No
07	Internal event	No	Yes

NOTICE
For bit 07:
An internal event is displayed if STO is active.

r10098 SI actual checksum across device-specific parameters

Variant: S200 PTI
Data type: Unsigned32 **Visible in:** Extended display
Read permission: Read drive data or acknowledge messages
Parameter group: Safety Integrated
Unit: -

Description: Displays the checksum over the checksum-checked parameters for the device-specific parameters of the drive system (actual checksum).

Dependency: See also: p10099

p10099 SI reference checksum across device-specific parameters

Variant: S200 PTI
Data type: Unsigned32 **Visible in:** Extended display
Read permission: Read drive data or acknowledge messages
Write permission: Edit Safety Integrated application
Can be changed in the operating state: Commissioning (Safety Integrated)
Parameter group: Safety Integrated
Unit: -

Min:	Max:	Factory setting:
0000 hex	FFFF FFFF hex	A1A1 A1A1 hex

Description: Displays the checksum over the checksum-checked parameters for the device-specific parameters of the drive system (reference checksum).

Dependency: See also: r10098

r10151.0 SI digital inputs status channel B

Variant: S200 PTI
Data type: Unsigned8 **Visible in:** Standard display

Read permission: Read drive data or acknowledge messages
Parameter group: Safety Integrated
Unit: -

Description: Display for the single-channel, logical and debounced status of the failsafe digital inputs of channel B.

Bit array:

Bit	Signal name	1 signal	0 signal
00	Status of DI 11+ (X131.5/6)	Logical 1	Logical 0

Dependency: See also: p10017, p10040

Note
The relationship between the logic level and the external voltage level at the input depends on the parameterization (see p10040) of the input as NC contact or NO contact, and is aligned to the use of a safety function:
With 24 V at the input, NC contacts have a logical "1" level, for 0 V at the input, a logical "0" level.
This means that an NC/NC contact parameterization of 0 V at both inputs of the F-DI leads to a status of the F-DI equal to "0" (safety function selected), for 24 V at both inputs of the F-DI, to a status of the F-DI equal to "1" (safety function deselected).
With 24 V at the input, NO contacts have a logical "0" level, for 0 V at the input, a logical "1" level. This means that for an NC/NO contact parameterization, the level 0 V/24 V leads to a status of the F-DI equal to "0" (safety function selected), the level 24 V/0 V leads to status of the F-DI equal to "1" (safety function deselected).
F-DI: Failsafe Digital Input

r10171.0 SI F-DI status channel B

Variant: S200 PTI
Data type: Unsigned8 **Visible in:** Extended display
Read permission: Read drive data or acknowledge messages
Parameter group: Safety Integrated
Unit: -

Description: Display for the status of the failsafe digital inputs.

Bit array:

Bit	Signal name	1 signal	0 signal
00	Status of the F-DI 0	Logical 1	Logical 0

Note
If a safety function (e.g. via c10022) is controlled via an F-DI, then the following applies:
- Logical "0": Safety function is selected
- Logical "1": safety function is deselected
F-DI: Failsafe Digital Input

r10180.0...7 SI status signals channel B

Variant: S200 PTI
Data type: Unsigned32 **Visible in:** Extended display
Read permission: Read drive data or acknowledge messages
Parameter group: Safety Integrated
Unit: -

Description: Status signals (channel B) for safety-relevant motion monitoring functions integrated in the drive.

Bit array:

Bit	Signal name	1 signal	0 signal
00	STO or safe pulse cancellation active	Yes	No
07	Internal event	No	Yes

NOTICE
For bit 07:
An internal event is displayed if STO is active.

r10198 SI actual checksum across device-specific parameters channel B

Variant: S200 PTI

Data type: Unsigned32 **Visible in:** Extended display
Read permission: Read drive data or acknowledge messages
Parameter group: Safety Integrated
Unit: -

Description: Displays the checksum over the checksum-checked parameters for the device-specific parameters of the drive system (actual checksum) channel B.

Dependency: See also: p10199

p10199 SI reference checksum across device-specific parameters chan B

Variant: S200 PTI
Data type: Unsigned32 **Visible in:** Extended display
Read permission: Read drive data or acknowledge messages
Write permission: Edit Safety Integrated application
Can be changed in the operating state: Commissioning (Safety Integrated)
Parameter group: Safety Integrated
Unit: -

Min:	Max:	Factory setting:
0000 hex	FFFF FFFF hex	B2B2 B2B2 hex

Description: Displays the checksum over the checksum-checked parameters for the device-specific parameters of the drive system (reference checksum) channel B.

Dependency: See also: r10198

r10352.0...15 SI STO select cause

Variant: S200 PTI
Data type: Unsigned32 **Visible in:** Standard display
Read permission: Read drive data or acknowledge messages
Parameter group: Safety Integrated
Unit: -

Description: Reason that STO (Safe Torque Off) function was selected.

Bit array:

Bit	Signal name	1 signal	0 signal
00	Selection via F-DI	High	Low
04	Safety commissioning mode active	High	Low
07	Response to SS1	High	Low
12	Stop response	High	Low
14	Response to parameterization/configuration errors	High	Low
15	Response to internal software error	High	Low

r10353.0...13 SI SS1 select cause

Variant: S200 PTI
Data type: Unsigned32 **Visible in:** Standard display
Read permission: Read drive data or acknowledge messages
Parameter group: Safety Integrated
Unit: -

Description: Reason for the selection of function SS1 (Safe Stop 1).

Bit array:

Bit	Signal name	1 signal	0 signal
00	Selection via F-DI	High	Low
12	Stop response	High	Low
13	Selection when transitioning to following function	High	Low

r10452.0...15 SI STO select cause channel B

Variant: S200 PTI
Data type: Unsigned32 **Visible in:** Extended display
Read permission: Read drive data or acknowledge messages
Parameter group: Safety Integrated
Unit: -

Description: Reason for the selection of function STO (Safe Torque Off) on channel B.

Bit array:

Bit	Signal name	1 signal	0 signal
00	Selection via F-DI	High	Low
04	Safety commissioning mode active	High	Low
07	Response to SS1	High	Low
12	Stop response	High	Low
14	Response to parameterization/configuration errors	High	Low
15	Response to internal software error	High	Low

r10453.0...13 SI SS1 select cause channel B

Variant: S200 PTI
Data type: Unsigned32 **Visible in:** Extended display
Read permission: Read drive data or acknowledge messages
Parameter group: Safety Integrated
Unit: -

Description: Reason for the selection of function SS1 (Safe Stop 1) on channel B.

Bit array:

Bit	Signal name	1 signal	0 signal
00	Selection via F-DI	High	Low
12	Stop response	High	Low
13	Selection when transitioning to following function	High	Low

c11500[0...3] LR initiate absolute encoder adjustment

Variant: S200 PTI
Available when function is active: Position control
Data type: Unsigned8 **Visible in:** Standard display
Read permission: Read drive data or acknowledge messages
Write permission: Edit device configuration or drive applications
Parameter group: Position control
Unit: -

Description: Initiate adjustment for absolute encoder
A 0/1 signal starts the absolute encoder adjustment.

Index: [0] = Position control
[1] = Motor encoder
[2] = Reserved
[3] = Reserved

Dependency: See also: p2507, r2526, c2598, p2599

⚠ CAUTION

For rotating absolute encoders, when adjusting, a range is set up symmetrically around zero with half of the encoder range, within which the position must be re-established after switch-off/switch-on. In this range, it is only permissible that the encoder overflows.
After the adjustment has been completed, it must be guaranteed that the range is not exited. The reason for this is that outside the range, there is no clear reference any longer between the encoder actual value and mechanical system.
If the home position (c2598) lies in this range, then the position actual value is set when adjusting to the home position. Otherwise, adjustment is canceled with F07443.
There is no overflow for linear absolute encoders. This means that after the adjustment, the position can be re-established in the complete traversing range after switch-off/switch-on. When adjusting, the position actual value is set to the home position.

Note
The status of the absolute encoder adjustment is indicated via p2507 and in status word r2526.
To permanently accept the determined position offset, it must be retentively saved (p0977).
This adjustment can only be initiated for an absolute encoder.

p11550 EPOS active homing reference cam selection

Variant: S200 PTI
Available when function is active: Basic positioner
Data type: Integer16 **Visible in:** Standard display
Read permission: Read drive data or acknowledge messages
Write permission: Edit device configuration or drive applications
Can be changed in the operating state: Ready for operation
Parameter group: Homing
Unit: -

Min:	Max:	Factory setting:
0	1	0

Description: Signal to evaluate "Active homing reference cam".
Value:
0: Reference cam selection 1
1: Reference cam selection 2
Dependency: See also: p2607, c2612

r11570 EPOS actual acceleration

Variant: S200 PTI
Available when function is active: Basic positioner
Data type: FloatingPoint32 **Visible in:** Standard display
Read permission: Read drive data or acknowledge messages
Parameter group: Jog, Traversing blocks, Direct setpoint input (MDI)
Unit: mm/s²
Description: Displays the acceleration value currently being processed.
Dependency: See also: p2572

Note
The maximum acceleration from p2572 is effective in operating mode "Jog" and "Active homing".

r11570 EPOS actual acceleration

Variant: S200 PTI
Available when function is active: Basic positioner

Values for: Basic positioner for rotary motion
Data type: FloatingPoint32 **Visible in:** Standard display
Read permission: Read drive data or acknowledge messages
Parameter group: Jog, Traversing blocks, Direct setpoint input (MDI)
Unit: °/s²

Description: Displays the acceleration value currently being processed.

Dependency: See also: p2572

Note
The maximum acceleration from p2572 is effective in operating mode "Jog" and "Active homing".

r11571 EPOS actual deceleration

Variant: S200 PTI
Available when function is active: Basic positioner
Data type: FloatingPoint32 **Visible in:** Standard display
Read permission: Read drive data or acknowledge messages
Parameter group: Jog, Traversing blocks, Direct setpoint input (MDI)
Unit: mm/s²

Description: Displays the deceleration value currently being processed.

Dependency: See also: p2573

Note
The maximum deceleration from p2573 is effective in operating mode "Jog" and "Active homing".

r11571 EPOS actual deceleration

Variant: S200 PTI
Available when function is active: Basic positioner
Values for: Basic positioner for rotary motion
Data type: FloatingPoint32 **Visible in:** Standard display
Read permission: Read drive data or acknowledge messages
Parameter group: Jog, Traversing blocks, Direct setpoint input (MDI)
Unit: °/s²

Description: Displays the deceleration value currently being processed.

Dependency: See also: p2573

Note
The maximum deceleration from p2573 is effective in operating mode "Jog" and "Active homing".

p29003 Control mode

Variant: S200 PTI
Data type: Integer16 **Visible in:** Standard display
Read permission: Read drive data or acknowledge messages
Write permission: Edit device configuration or drive applications
Can be changed in the operating state: Ready for operation
Parameter group: Quick commissioning
Unit: -

Min:	Max:	Factory setting:
0	7	0

Description: Sets a control mode.
0: Fast PTI mode
2: Speed mode (S)
3: Torque mode (T)
5: Control change mode: Fast PTI/Speed
6: Control change mode: Fast PTI/Torque
7: Control change mode: Speed/Torque

Value:

0:	FAST_PTI
2:	S
3:	T
5:	FPTI_S
6:	FPTI_T
7:	S_T

Note
The EPOS mode (p29003=4) can only be set, after EPOS function module is activated (e.g. via Webserver).
The compound control mode can be controlled by the digital input signal C-MODE. In compound control mode, when DI10 (C-MODE) is 0, the first control mode is selected; otherwise, the second one is selected.

p29006 Servo-on mode selection

Data type: Integer16 **Visible in:** Standard display
Read permission: Read drive data or acknowledge messages
Write permission: Edit device configuration or drive applications
Can be changed in the operating state: Ready for operation
Parameter group: Quick commissioning
Unit: -

Min:	Max:	Factory setting:
0	2	0

Description: Selects the servo-on mode.
0: Servo-on via SON rising edge
1: Servo-on via SON high-level during power-on and via SON rising edge after power-on
2: Servo-on via SON high-level

Value:

0:	SON_EDGE_TRIGGING
1:	SON_LEVEL and SON_EDGE_TRIGGING
2:	SON_LEVEL_TRIGGING

p29008 Modbus control source

Variant: S200 PTI
Data type: Integer16 **Visible in:** Standard display
Read permission: Read drive data or acknowledge messages
Write permission: Edit device configuration or drive applications
Can be changed in the operating state: Ready for operation
Parameter group: Quick commissioning
Unit: -

Min:	Max:	Factory setting:
1	2	2

Description: Selects the Modbus control source.

Value:

1:	Setpoint and control word from Modbus PZD
2:	No setpoint and control word from Modbus PZD

Note
Modbus PZD is limited to Fast PTI, Speed, Torque, and EPOS modes. It is invalid for compound control modes.

p29043 Fixed torque setpoint

Variant:	S200 PTI	
Data type: FloatingPoint32	**Visible in:** Standard display	
Read permission:	Read drive data or acknowledge messages	
Write permission:	Edit device configuration or drive applications	
Can be changed in the operating state:	Operation	
Parameter group:	Torque setpoints	
Unit: %		
Min:	**Max:**	**Factory setting:**
-350.0 [%]	350.0 [%]	0.0 [%]

Description: Sets the internal torque setpoint.
You can select the internal parameters or the analog input as the source of the torque setpoint by configuring the digital input signal Torque setpoint source.

c29045 Torque setpoint

Variant:	S200 PTI
Data type: FloatingPoint32	**Visible in:** Standard display
Read permission:	Read drive data or acknowledge messages
Write permission:	Edit device configuration or drive applications
Parameter group:	Torque setpoints
Unit: -	

Description: AI channel for torque setpoint.

c29046 Torque limit

Variant:	S200 PTI
Data type: FloatingPoint32	**Visible in:** Standard display
Read permission:	Read drive data or acknowledge messages
Write permission:	Edit device configuration or drive applications
Parameter group:	Torque limiting
Unit: %	

Description: AI channel for torque limitation.

c29047 Torque setpoint source

Variant:	S200 PTI
Data type: Unsigned8	**Visible in:** Standard display
Read permission:	Read drive data or acknowledge messages
Write permission:	Edit device configuration or drive applications
Parameter group:	Torque setpoints
Unit: -	

Description: Signal for the torque setpoint.

c29048 Torque limit selection bit 0

Data type: Unsigned8	**Visible in:** Standard display
Read permission:	Read drive data or acknowledge messages
Write permission:	Edit device configuration or drive applications

Parameter group: Torque limiting
Unit: -

Description: Signal of bit 0 for the torque limit.

c29049 Torque limit selection bit 1

Data type: Unsigned8 **Visible in:** Standard display
Read permission: Read drive data or acknowledge messages
Write permission: Edit device configuration or drive applications
Parameter group: Torque limiting
Unit: -

Description: Signal of bit 1 for the torque limit.

p29050[0...3] Upper torque limit

Data type: FloatingPoint32 **Visible in:** Standard display
Read permission: Read drive data or acknowledge messages
Write permission: Edit device configuration or drive applications
Can be changed in the operating state: Ready for operation
Parameter group: Torque limiting
Unit: %

Min:	Max:	Factory setting:
-150.0 [%]	350.0 [%]	350.0 [%]

Description: Sets the upper torque limit.
Three internal torque limits in total are available.
With the combination of the digital input signals "Torque limit selection bit 0" and "Torque limit selection bit 1", you can select one of the three internal torque limits as the source of the upper torque limit.

Index: [0] = Upper torque limit 0
[1] = Upper torque limit 1
[2] = Upper torque limit 2
[3] = Upper torque limit 3

p29051[0...3] Lower torque limit

Data type: FloatingPoint32 **Visible in:** Standard display
Read permission: Read drive data or acknowledge messages
Write permission: Edit device configuration or drive applications
Can be changed in the operating state: Ready for operation
Parameter group: Torque limiting
Unit: %

Min:	Max:	Factory setting:
-350.0 [%]	150.0 [%]	-350.0 [%]

Description: Sets the lower torque limit.
Three internal torque limits in total are available.
With the combination of the digital input signals "Torque limit selection bit 0" and "Torque limit selection bit 1", you can select one of the three internal torque limits as the source of the lower torque limit.

Index: [0] = Lower torque limit 0
[1] = Lower torque limit 1
[2] = Lower torque limit 2
[3] = Lower torque limit 3

p29054 Overload threshold for output signal triggering

Data type: FloatingPoint32 **Visible in:** Standard display
Read permission: Read drive data or acknowledge messages
Write permission: Edit device configuration or drive applications
Can be changed in the operating state: Ready for operation
Parameter group: Torque limiting
Unit: %

Min:	Max:	Factory setting:
10.0 [%]	300.0 [%]	100.0 [%]

Description: Sets the overload threshold for the output torque.

c29063 Speed limit selection bit 0

Data type: Unsigned8 **Visible in:** Standard display
Read permission: Read drive data or acknowledge messages
Write permission: Edit device configuration or drive applications
Parameter group: Speed limiting
Unit: -

Description: Signal of bit 0 for the speed limit.

c29064 Speed limit selection bit 1

Data type: Unsigned8 **Visible in:** Standard display
Read permission: Read drive data or acknowledge messages
Write permission: Edit device configuration or drive applications
Parameter group: Speed limiting
Unit: -

Description: Signal of bit 1 for the speed limit.

c29066 Speed limit

Variant: S200 PTI
Data type: FloatingPoint32 **Visible in:** Standard display
Read permission: Read drive data or acknowledge messages
Write permission: Edit device configuration or drive applications
Parameter group: Speed limiting
Unit: %

Description: AI channel for speed limitaion

c29067 Speed setpoint

Variant: S200 PTI
Data type: FloatingPoint32 **Visible in:** Standard display
Read permission: Read drive data or acknowledge messages
Write permission: Edit device configuration or drive applications
Parameter group: Speed setpoint
Unit: %

Description: AI channel for speed setpoint.

p29070[0...3] Speed limit in positive direction of rotation

Data type: FloatingPoint32 **Visible in:** Standard display

Read permission:	Read drive data or acknowledge messages	
Write permission:	Edit device configuration or drive applications	
Can be changed in the operating state:	Ready for operation	
Parameter group:	Speed limiting	
Unit: rpm		
Min:	**Max:**	**Factory setting:**
0.00 [rpm]	210000.00 [rpm]	210000.00 [rpm]

Description: Sets the maximum speed for the positive direction.
Three internal speed limits in total are available.
With the combination of the digital input signals "Speed limit selection bit 0" and "Speed limit selection bit 1", you can select one of the three internal speed limits as the source of the speed limit.

Index: [0] = Speed limit for positive direction 0
[1] = Speed limit for positive direction 1
[2] = Speed limit for positive direction 2
[3] = Speed limit for positive direction 3

Dependency: The default value depends on the maximum motor speed.

p29071[0...3] Speed limit in negative direction of rotation

Data type: FloatingPoint32	**Visible in:** Standard display	
Read permission:	Read drive data or acknowledge messages	
Write permission:	Edit device configuration or drive applications	
Can be changed in the operating state:	Ready for operation	
Parameter group:	Speed limiting	
Unit: rpm		
Min:	**Max:**	**Factory setting:**
-210000.00 [rpm]	0.00 [rpm]	-210000.00 [rpm]

Description: Sets the maximum speed for the negative direction.
Three internal speed limits in total are available.
With the combination of the digital input signals "Speed limit selection bit 0" and "Speed limit selection bit 1", you can select one of the three internal speed limits as the source of the speed limit.

Index: [0] = Speed limit for negative direction 0
[1] = Speed limit for negative direction 1
[2] = Speed limit for negative direction 2
[3] = Speed limit for negative direction 3

Dependency: The default value depends on the maximum motor speed.

c29074 Zero speed clamp active

Variant:	S200 PTI
Data type: Unsigned8	**Visible in:** Standard display
Read permission:	Read drive data or acknowledge messages
Write permission:	Edit device configuration or drive applications
Parameter group:	Speed limiting
Unit: -	

Description: Signal for the active zero speed clamp.

p29075 Speed clamp threshold

Variant:	S200 PTI
Data type: FloatingPoint32	**Visible in:** Standard display

Read permission:	Read drive data or acknowledge messages	
Write permission:	Edit device configuration or drive applications	
Can be changed in the operating state:	Ready for operation	
Parameter group:	Speed limiting	
Unit: rpm		
Min:	**Max:**	**Factory setting:**
0.0 [rpm]	200.0 [rpm]	200.0 [rpm]

Description: Sets the threshold for the zero speed clamp.
If the function of zero speed clamp has been enabled in speed control mode, the motor speed is clamped to 0 when both the setpoint speed and the actual speed are below this threshold.

p29078 Threshold for speed reached

Data type: FloatingPoint32	**Visible in:** Standard display	
Read permission:	Read drive data or acknowledge messages	
Write permission:	Edit device configuration or drive applications	
Can be changed in the operating state:	Ready for operation	
Parameter group:	Speed limiting	
Unit: rpm		
Min:	**Max:**	**Factory setting:**
0.0 [rpm]	100.0 [rpm]	10.0 [rpm]

Description: Sets the threshold for triggering the output signal SPDR.

p29101 Protective speed limit (PSL) source selection

Variant:	S200 PTI	
Data type: Integer16	**Visible in:** Extended display	
Read permission:	Read drive data or acknowledge messages	
Write permission:	Edit device configuration or drive applications	
Can be changed in the operating state:	Ready for operation	
Parameter group:	Speed limiting	
Unit: -		
Min:	**Max:**	**Factory setting:**
0	2	0

Description: Selects a protective speed limit source.
0: Inhibit protective speed limit.
1: Set protective speed limit with the fixed value in p29102.
2: Set protective speed limit with analog input 0.

Value:
0: PSL disable
1: PSL fixed speed
2: PSL AI speed

p29102[0...1] Positive/negative protective speed limit fixed value

Variant:	S200 PTI	
Data type: FloatingPoint32	**Visible in:** Extended display	
Read permission:	Read drive data or acknowledge messages	
Write permission:	Edit device configuration or drive applications	
Can be changed in the operating state:	Operation	

Parameter group: Speed limiting
Unit: rpm

Min:	Max:	Factory setting:
0.00 [rpm]	210000.00 [rpm]	500.00 [rpm]

Description: Sets the protective speed limit fixed value in the positive/negative direction.
p29102[0]: Protective speed limit fixed value in the positive direction
p29102[1]: Protective speed limit fixed value in the negative direction

c29103[0...1] Protective speed limit

Variant: S200 PTI
Data type: FloatingPoint32 **Visible in:** Extended display
Read permission: Read drive data or acknowledge messages
Write permission: Edit device configuration or drive applications
Parameter group: Speed limiting
Unit: -

Description: AI channel for protective speed limit.

r29104.0...3 Protective speed limit status

Variant: S200 PTI
Data type: Unsigned32 **Visible in:** Extended display
Read permission: Read drive data or acknowledge messages
Parameter group: Speed limiting
Unit: -

Description: Displays the protective speed limit status.
Bit 0=1, if protective speed limit reached
Bit 1=1, if positive protective speed limit reached
Bit 2=1, if negative protective speed limit reached
Bit 3=1, if torque control is in protective speed limit

Bit array:

Bit	Signal name	1 signal	0 signal
00	Protective speed limit reached	YES	NO
01	Positive protective speed limit reached	YES	NO
02	Negative protective speed limit reached	YES	NO
03	Torque control in protective speed limit	YES	NO

p29108 Protective speed controller P gain

Variant: S200 PTI
Data type: FloatingPoint32 **Visible in:** Extended display
Read permission: Read drive data or acknowledge messages
Write permission: Edit device configuration or drive applications
Can be changed in the operating state: Operation
Parameter group: Speed limiting
Unit: Nms/rad

Min:	Max:	Factory setting:
0.000 [Nms/rad]	999999.000 [Nms/rad]	0.300 [Nms/rad]

Description: Sets the protective speed controller gain.
This parameter will be automatically set after motor commissioning.
The calculated value depends on motor inertia in r0341.

Note
If protective speed control parameter setting is not appropriate in p29108 and p29109, the servo system vibrates.

p29109 Protective speed controller filter time

Variant:	S200 PTI	
Data type: FloatingPoint32	**Visible in:** Extended display	
Read permission:	Read drive data or acknowledge messages	
Write permission:	Edit device configuration or drive applications	
Can be changed in the operating state:	Ready for operation	
Parameter group:	Speed limiting	
Unit: ms		
Min:	**Max:**	**Factory setting:**
0.00 [ms]	100000.00 [ms]	20.00 [ms]

Description: Sets the protective speed controller filter time constant.

p29110[0...1] Position loop gain scaling

Data type: FloatingPoint32	**Visible in:** Extended display	
Read permission:	Read drive data or acknowledge messages	
Write permission:	Edit device configuration or drive applications	
Can be changed in the operating state:	Operation	
Parameter group:	Position controller	
Unit: %		
Min:	**Max:**	**Factory setting:**
0.000 [%]	10000.000 [%]	100.000 [%]

Description: Sets the scaling factors for the proportional gain of the position controller (p2538) and the fast position controller (p29178).

The effective position loop gain value is p2538*p29110 under the PTI mode and p29178*p29110 under the fast PTI mode.

Two scaling factors for position loop gain are available. You can switch between the two factors by configuring the digital input signal in c29149 or setting relevant condition parameters.

Index:

[0]: Scaling factor 1

[1]: Scaling factor 2

Note
p29110[0...1] is only valid when the gain switching mode is enabled. If the gain switching mode is disabled, the scaling factor output is 100% as default.

p29120[0...1] Speed loop gain scaling

Data type: FloatingPoint32	**Visible in:** Extended display	
Read permission:	Read drive data or acknowledge messages	
Write permission:	Edit device configuration or drive applications	
Can be changed in the operating state:	Operation	
Parameter group:	Rotating measurement/speed controller optimization	
Unit: %		
Min:	**Max:**	**Factory setting:**
0.0000 [%]	10000.0000 [%]	100.0000 [%]

Description: Sets the scaling factors for speed loop gain. The effective speed loop gain value is p1460*p29120.

Two speed loop gain scaling factors are available. You can switch between two gain scaling factors by configuring the digital input signal in c29149 or setting relevant condition parameters.

Index:

[0]: Scaling factor 1

[1]: Scaling factor 2

Note

p29120[0...1] is only valid when the gain switching mode is enabled. If the gain switching mode is disabled, the scaling factor output is 100% as default.

p29121[0...1] Speed loop integral time scaling

Data type: FloatingPoint32	**Visible in:** Extended display	
Read permission:	Read drive data or acknowledge messages	
Write permission:	Edit device configuration or drive applications	
Can be changed in the operating state:	Operation	
Parameter group:	Rotating measurement/speed controller optimization	
Unit: %		
Min:	**Max:**	**Factory setting:**
0.1 [%]	6500.0 [%]	100.0 [%]

Description: Sets the scaling factors for speed loop integral time. The effective speed loop integral time is p1462/p29121.

Two speed loop integral time scaling factors are available. You can switch between two time scaling factors by configuring the digital input signal in c29149 or setting relevant condition parameters.

Index:

[0]: Scaling factor 1

[1]: Scaling factor 2

Note

p29121[0...1] is only valid when the gain switching mode is enabled. If the gain switching mode is disabled, the scaling factor output is 100% as default.

p29130 Gain switching mode selection

Data type: Integer16	**Visible in:** Extended display	
Read permission:	Read drive data or acknowledge messages	
Write permission:	Edit device configuration or drive applications	
Can be changed in the operating state:	Ready for operation	
Parameter group:	Rotating measurement/speed controller optimization	
Unit: -		
Min:	**Max:**	**Factory setting:**
0	4	0

Description: Selects the gain switching mode.

0: Disabled

1: Switch through the signal in c29149

2: Position deviation as switching condition

3: Pulse input frequency as switching condition

4: Actual speed as switching condition

Value:

0:	Disable
1:	DI G-CHANGE
2:	Position deviation
3:	Pulse input frequency

4: Actual speed

Note
Gain switching function is used only when the autotuning function is disabled (p5300 = 0).

p29131 Gain switching condition: Pulse deviation

Data type: FloatingPoint32	**Visible in:** Extended display	
Read permission:	Read drive data or acknowledge messages	
Write permission:	Edit device configuration or drive applications	
Can be changed in the operating state:	Ready for operation	
Parameter group:	Rotating measurement/speed controller optimization	
Unit: -		
Min:	**Max:**	**Factory setting:**
0.0000	2.1474826e+09	100.0000

Description:
Sets the position deviation threshold for automatically triggering gain switching.
If the gain switching function is enabled and this condition is selected:
- Switch from scaling factor 1 to scaling factor 2 when the position deviation is greater than the threshold.
- Switch from scaling factor 2 to scaling factor 1 when the position deviation is less than the threshold.

Note
In the fast PTI mode, it is a dimensionless unit. In other modes, the unit depends on the actual physical unit setting.

p29132 Gain switching condition: Position setpoint frequency

Data type: FloatingPoint32	**Visible in:** Extended display	
Read permission:	Read drive data or acknowledge messages	
Write permission:	Edit device configuration or drive applications	
Can be changed in the operating state:	Ready for operation	
Parameter group:	Rotating measurement/speed controller optimization	
Unit: -		
Min:	**Max:**	**Factory setting:**
0.0000	210000.0000	100.0000

Description:
Sets the pulse input speed (PTI) threshold or internal position speed (EPOS) threshold for triggering gain switching.
If the gain switching function is enabled and this condition is selected:
1. PTI
- Switch from scaling factor 1 to scaling factor 2 when the pulse train input speed is greater than the threshold.
- Switch from scaling factor 2 to scaling factor 1 when the pulse train input speed is less than the threshold.
2. EPOS
- Switch from scaling factor 1 to scaling factor 2 when the speed is greater than the threshold.
- Switch from scaling factor 2 to scaling factor 1 when the speed is less than the threshold.

Note
In the fast PTI mode, unit is Hz. In other mode, unit depends on actual physical unit setting.

p29133 Gain switching condition: Actual speed

Data type: FloatingPoint32	**Visible in:** Extended display
Read permission:	Read drive data or acknowledge messages
Write permission:	Edit device configuration or drive applications
Can be changed in the operating state:	Ready for operation

Parameter group: Rotating measurement/speed controller optimization

Unit: rpm

Min:	Max:	Factory setting:
0 [rpm]	210000 [rpm]	100 [rpm]

Description: Sets the speed threshold for triggering gain switching.
If the gain switching function is enabled and this condition is selected:
- Switch from scaling factor 1 to scaling factor 2 when the actual motor speed is greater than the threshold.
- Switch from scaling factor 2 to scaling factor 1 when the actual motor speed is less than the threshold.

p29139 Gain switching time constant

Data type: FloatingPoint32 **Visible in:** Extended display

Read permission: Read drive data or acknowledge messages

Write permission: Edit device configuration or drive applications

Can be changed in the operating state: Ready for operation

Parameter group: Rotating measurement/speed controller optimization

Unit: ms

Min:	Max:	Factory setting:
8 [ms]	1000 [ms]	20 [ms]

Description: Sets the time constant for gain switching to avoid reduction of system reliability due to frequent gain switching.

p29140 PI/P switching mode selection

Data type: Integer16 **Visible in:** Extended display

Read permission: Read drive data or acknowledge messages

Write permission: Edit device configuration or drive applications

Can be changed in the operating state: Ready for operation

Parameter group: Rotating measurement/speed controller optimization

Unit: -

Min:	Max:	Factory setting:
0	5	0

Description: Selects a condition for the switching from PI control to P control under the speed loop.
0: Disabled
1: Torque is higher than a parameterizable setting value.
2: Using the digital input signal in c29149.
3: Speed is higher than a parameterizable setting value.
4: Acceleration is higher than a parameterizable setting value.
5: Pulse deviation is higher than a parameterizable setting value.

Value:
0: Disable
1: Torque
2: DI G-CHANGE
3: Speed
4: Acceleration
5: Pulse deviation

Note
Only when the autotuning function (p5300=0) and gain switching function(p29130=0) are both disabled, can thePI/P switching function be used.

p29141 PI/P switching condition: Torque

Data type: FloatingPoint32 **Visible in:** Extended display

Read permission:	Read drive data or acknowledge messages	
Write permission:	Edit device configuration or drive applications	
Can be changed in the operating state:	Ready for operation	
Parameter group:	Rotating measurement/speed controller optimization	
Unit: %		
Min:	**Max:**	**Factory setting:**
0 [%]	300 [%]	200 [%]

Description: Sets the torque threshold for PI/P switching. If the PI/P switching function is enabled and this condition is selected:
- Switch from the PI control to the P control when the actual torque is greater than the threshold.
- Switch from the P control to the PI control when the actual torque is less than the threshold.

p29142 PI/P switching condition: Actual speed

Data type: FloatingPoint32	**Visible in:** Extended display	
Read permission:	Read drive data or acknowledge messages	
Write permission:	Edit device configuration or drive applications	
Can be changed in the operating state:	Ready for operation	
Parameter group:	Rotating measurement/speed controller optimization	
Unit: rpm		
Min:	**Max:**	**Factory setting:**
0 [rpm]	210000 [rpm]	2000 [rpm]

Description: Sets the speed threshold for PI/P switching. If the PI/P switching function is enabled and this condition is selected:
- Switch from the PI control to the P control when the actual speed is greater than the threshold.
- Switch from the P control to the PI control when the actual speed is less than the threshold.

p29143 PI/P switching condition: Acceleration

Data type: FloatingPoint32	**Visible in:** Extended display	
Read permission:	Read drive data or acknowledge messages	
Write permission:	Edit device configuration or drive applications	
Can be changed in the operating state:	Ready for operation	
Parameter group:	Rotating measurement/speed controller optimization	
Unit: rev/s²		
Min:	**Max:**	**Factory setting:**
0 [rev/s²]	30000 [rev/s²]	20 [rev/s²]

Description: Sets the acceleration threshold for PI/P switching. If the PI/P switching function is enabled and this condition is selected:
- Switch from the PI control to the P control when the actual acceleration is greater than the threshold.
- Switch from the P control to the PI control when the actual acceleration is less than the threshold.

p29144 PI/P switching condition: Pulse deviation

Data type: FloatingPoint32	**Visible in:** Extended display	
Read permission:	Read drive data or acknowledge messages	
Write permission:	Edit device configuration or drive applications	
Can be changed in the operating state:	Ready for operation	
Parameter group:	Rotating measurement/speed controller optimization	
Unit: -		
Min:	**Max:**	**Factory setting:**
0.0000	2.1474826e+09	30000.0000

Description: Sets the pulse deviation threshold for PI/P switching. If the PI/P switching function is enabled and this condition is selected:
- Switch from the PI control to the P control when the actual pulse deviation is greater than the threshold.
- Switch from the P control to the PI control when the actual pulse deviation is less than the threshold.

Note
In the fast PTI mode, it is a dimensionless unit. In other modes, the unit depends on the actual physical unit setting.

c29149 Gain switching or PI/P switching

Data type: Unsigned8 **Visible in:** Extended display
Read permission: Read drive data or acknowledge messages
Write permission: Edit device configuration or drive applications
Parameter group: Rotating measurement/speed controller optimization
Unit: -

Description: Signal for gain switching or PI/P switching.

p29166 FPC torque precontrol mode

Data type: Integer16 **Visible in:** Standard display
Read permission: Read drive data or acknowledge messages
Write permission: Edit device configuration or drive applications
Can be changed in the operating state: Ready for operation
Parameter group: Fast position controller
Unit: -

Min:	Max:	Factory setting:
1	2	1

Description: Sets the closed-loop control of the Fast Position Controller (FPC) for torque precontrol.

Value:
1: Torque precontrol in speed controller
2: Torque precontrol in position controller

Note
Changes become effective only after performing One Button Tuning or Online Tuning again.
If the setting value is not 1, torque precontrol will not be available for speed control mode either.

p29174 FPC speed precontrol factor

Data type: FloatingPoint32 **Visible in:** Standard display
Read permission: Read drive data or acknowledge messages
Write permission: Edit device configuration or drive applications
Can be changed in the operating state: Operation
Parameter group: Fast position controller
Unit: %

Min:	Max:	Factory setting:
0.00 [%]	200.00 [%]	100.00 [%]

Description: Sets the speed precontrol factor for the Fast Position Controller (FPC).
When p29174 = 0%, the precontrol is deactivated.

p29175 FPC speed precontrol filter PT1

Data type: FloatingPoint32 **Visible in:** Extended display
Read permission: Read drive data or acknowledge messages
Write permission: Edit device configuration or drive applications

Can be changed in the operating state:	Operation	
Parameter group:	Fast position controller	
Unit: ms		
Min:	**Max:**	**Factory setting:**
0.00 [ms]	10.00 [ms]	0.00 [ms]

Description: Sets the time constant for the speed precontrol filter (PT1).

p29176 FPC precontrol symmetrizing time constant

Data type: FloatingPoint32	**Visible in:** Extended display	
Read permission:	Read drive data or acknowledge messages	
Write permission:	Edit device configuration or drive applications	
Can be changed in the operating state:	Operation	
Parameter group:	Fast position controller	
Unit: ms		
Min:	**Max:**	**Factory setting:**
0.00 [ms]	100.00 [ms]	1.50 [ms]

Description: Sets the PT1 filter to emulate the timing behavior of the closed-loop speed control.

p29178 FPC proportional gain

Data type: FloatingPoint32	**Visible in:** Standard display	
Read permission:	Read drive data or acknowledge messages	
Write permission:	Edit device configuration or drive applications	
Can be changed in the operating state:	Operation	
Parameter group:	Fast position controller	
Unit: 1000 rpm		
Min:	**Max:**	**Factory setting:**
0.000 [1000 rpm]	300.000 [1000 rpm]	1.000 [1000 rpm]

Description: Sets the proportional gain of the Fast Position Controller(FPC).

p29180 FPC output speed limit

Data type: FloatingPoint32	**Visible in:** Standard display	
Read permission:	Read drive data or acknowledge messages	
Write permission:	Edit device configuration or drive applications	
Can be changed in the operating state:	Operation	
Parameter group:	Fast position controller	
Unit: rpm		
Min:	**Max:**	**Factory setting:**
0.000 [rpm]	210000.000 [rpm]	210000.000 [rpm]

Description: Sets the speed limit of the Fast Position Controller (FPC) output.

p29181 FPC torque precontrol filter PT1

Data type: FloatingPoint32	**Visible in:** Extended display	
Read permission:	Read drive data or acknowledge messages	
Write permission:	Edit device configuration or drive applications	
Can be changed in the operating state:	Operation	

Parameter group: Fast position controller
Unit: ms

Min:	Max:	Factory setting:
0.00 [ms]	100.00 [ms]	0.00 [ms]

Description: Sets the smoothing time constant of the precontrol torque from the Fast Position Controller(FPC).

r29182 FPC total speed setpoint

Data type: FloatingPoint32 **Visible in:** Extended display
Read permission: Read drive data or acknowledge messages
Parameter group: Fast position controller
Unit: rpm

Description: Displays the total speed setpoint.

r29185.1...6 FPC status word

Data type: Unsigned16 **Visible in:** Standard display
Read permission: Read drive data or acknowledge messages
Parameter group: Fast position controller
Unit: -

Description: Displays the status word of the fast position controller.

Bit array:

Bit	Signal name	1 signal	0 signal
01	FPC active	Yes	No
04	Torque precontrol active	Yes	No
06	FPC output limited	Yes	No

r29186 FPC actual position value

Data type: Integer32 **Visible in:** Extended display
Read permission: Read drive data or acknowledge messages
Parameter group: Fast position controller
Unit: -

Description: Displays the actual position value.

r29187 FPC deviation in position

Data type: Integer32 **Visible in:** Extended display
Read permission: Read drive data or acknowledge messages
Parameter group: Fast position controller
Unit: -

Description: Displays the deviation between the setpoint and the actual position at the controller input.

c29265 Pulse train setpoint inhibited

Data type: Unsigned8 **Visible in:** Extended display
Read permission: Read drive data or acknowledge messages
Write permission: Edit device configuration or drive applications
Parameter group: Processing
Unit: -

Description: Signal for inhibiting pulse train setpoint.
Value = 1 signal:
The pulse input is ignored and the position setpoint is frozen.

p29266 Droop pulse clearing mode selection

Data type: Integer16 **Visible in:** Standard display
Read permission: Read drive data or acknowledge messages
Write permission: Edit device configuration or drive applications
Can be changed in the operating state: Ready for operation
Parameter group: Processing
Unit: -

Min:	Max:	Factory setting:
0	2	0

Description: Selects a mode to clear droop pulses.

Value:
0: Clear droop pulses before servo-on
1: Clear droop pulses before servo-on or with CLR high level
2: Clear droop pulses before servo-on or with CLR rising edge

c29267 Clear droop pulses

Variant: S200 Basic PTI
Data type: Unsigned8 **Visible in:** Extended display
Read permission: Read drive data or acknowledge messages
Write permission: Edit device configuration or drive applications
Parameter group: Processing
Unit: -

Description: Signal for clearing droop pulses (CLR).
The droop pulse clearing is executed depending on the clearing mode selected via p29266.
- p29266 = 0: Clear droop pulses before enabling the servo-on signal.
- p29266 = 1: Clear droop pulses before enabling the servo-on signal or with CLR high level (c29267 = 1).
- p29266 = 2: Clear droop pulses before enabling the servo-on signal or with CLR rising edge (c29267 = 0 -> 1).

c29267 Clear droop pulses

Variant: S200 PTI
Data type: Unsigned8 **Visible in:** Extended display
Read permission: Read drive data or acknowledge messages
Write permission: Edit device configuration or drive applications
Parameter group: Processing
Unit: -

Description: Signal for clearing droop pulses (CLR).
The droop pulse clearing is executed depending on the clearing mode selected via p29266.
- p29266 = 0: Clear droop pulses before enabling the servo-on signal.
- p29266 = 1: Clear droop pulses before enabling the servo-on signal or with CLR high level (c29267 = 1).
- p29266 = 2: Clear droop pulses before enabling the servo-on signal or with CLR rising edge (c29267 = 0 -> 1).

p29271 Number of setpoint pulses per revolution

Data type: Unsigned32 **Visible in:** Standard display
Read permission: Read drive data or acknowledge messages
Write permission: Edit device configuration or drive applications
Can be changed in the operating state: Operation
Parameter group: Processing
Unit: -

Min:	Max:	Factory setting:
0	2147483647	0

Description: Sets the number of setpoint pulses per motor revolution. The servo motor rotates for one revolution when the number of the setpoint pulses reaches this value.

Dependency: See also: p29272, p29273

Note
When p29271 = 0, the number of required setpoint pulses is decided by the electronic gear ratio (p29272/p29273).

p29272[0...3] Numerator of electronic gear

Data type: Unsigned32 **Visible in:** Standard display
Read permission: Read drive data or acknowledge messages
Write permission: Edit device configuration or drive applications
Can be changed in the operating state: Operation
Parameter group: Processing
Unit: -

Min:	Max:	Factory setting:
1	2147483647	1

Description: Sets the numerator of the electronic gear ratio for the setpoint pulses.
Four numerators in total are available. You can select one of the numerators by configuring the digital input signal EGEAR.
For detailed information about the calculation of a numerator, refer to the Operating Instructions to calculate.

Index: [0] = Electronic gear numerator 0
[1] = Electronic gear numerator 1
[2] = Electronic gear numerator 2
[3] = Electronic gear numerator 3

Dependency: See also: p29271, p29273, c29275, c29276

Note
This setting value is only effective when p29271 = 0.

p29273 Denominator of electronic gear

Data type: Unsigned32 **Visible in:** Standard display
Read permission: Read drive data or acknowledge messages
Write permission: Edit device configuration or drive applications
Can be changed in the operating state: Operation
Parameter group: Processing
Unit: -

Min:	Max:	Factory setting:
1	2147483647	1

Description: Sets the denominator of the electronic gear ratio for the setpoint pulses.

Dependency: See also: p29271, p29272

Note
This setting value is only effective when p29271 = 0.

c29275 Electronic gear selection bit 0

Data type: Unsigned8 **Visible in:** Extended display
Read permission: Read drive data or acknowledge messages
Write permission: Edit device configuration or drive applications

Parameter group: Processing
Unit: -

Description: Signal of bit 0 for the electronic gear selection.

c29276 Electronic gear selection bit 1

Data type: Unsigned8 **Visible in:** Extended display
Read permission: Read drive data or acknowledge messages
Write permission: Edit device configuration or drive applications
Parameter group: Processing
Unit: -

Description: Signal of bit 1 for the electronic gear selection.

p29283[0...1] Pulse setpoint moving average time

Data type: FloatingPoint32 **Visible in:** Standard display
Read permission: Read drive data or acknowledge messages
Write permission: Edit device configuration or drive applications
Can be changed in the operating state: Operation
Parameter group: Processing
Unit: ms

Min:	Max:	Factory setting:
0.00 [ms]	128.00 [ms]	[0] 1.00 [ms] [1] 0.00 [ms]

Description: Sets the smoothing time for moving average filters.
Index:
[0]: Smoothing time for moving average filter 1
[1]: Smoothing time for moving average filter 2

Note
There is additional delay on position setpoint with this smoothing function. It may be used for:
- Reducing the noise and jitter with high ratio of electronic gear
- Jerk limiting

p29284 Pulse setpoint PT1 filter time constant

Data type: FloatingPoint32 **Visible in:** Standard display
Read permission: Read drive data or acknowledge messages
Write permission: Edit device configuration or drive applications
Can be changed in the operating state: Operation
Parameter group: Processing
Unit: ms

Min:	Max:	Factory setting:
0.00 [ms]	1000.00 [ms]	0.00 [ms]

Description: Sets the time constant for the position setpoint filter (PT1).

Note
The filter increases the effective response time. This allows a softer control behavior with improved tolerance with respect to noise/disturbances.

r29288 Pulse setpoint after smoothing

Data type: Integer32 **Visible in:** Extended display

Read permission: Read drive data or acknowledge messages
Parameter group: Processing
Unit: -

Description: Displays the position setpoint after smoothing.

Note
This is the input of the position controller by default.

r29289.0...15 Pulse setpoint status word

Data type: Unsigned16 **Visible in:** Extended display
Read permission: Read drive data or acknowledge messages
Parameter group: Processing
Unit: -

Description: Displays the status word for the pulse setpoint processing.

Bit array:

Bit	Signal name	1 signal	0 signal
00	Setpoint inhibited active	Yes	No
01	E-gear switch bit 0 active	Yes	No
02	E-gear switch bit 1 active	Yes	No
03	E-gear active	Yes	No
04	Droop clear active	Yes	No
08	Following error within tolerance	Yes	No
10	In-position	Yes	No
15	New setpoint active	Yes	No

Note
For bit 00 = 1:
- Inhibiting setpoint activated.
For bit 02:01 = x:
- "x" is the index of actual e-gear factor in p29272[0...3].
- The values are valid only when e-gear function is activated (bit 03 = 1).
For bit 03 = 1:
- E-gear function is activated (p29271 = 0).
For bit 04 = 1:
- Clearing pulse droop activated.
For bit 08 = 1:
- The following error between position setpoint and actual in tolerance (p29294).
For bit 10 = 1:
- The actual position reached the target position (p29290, p29291, p29292, p29293).
For bit 15 = 1:
- There is new position setpoint in setting time (p29293).

p29290 In-position monitoring mode

Data type: Integer16 **Visible in:** Standard display
Read permission: Read drive data or acknowledge messages
Write permission: Edit device configuration or drive applications
Can be changed in the operating state: Ready for operation
Parameter group: Position monitoring
Unit: -

Min:	Max:	Factory setting:
0	2	0

Description: Sets the mode for the in-position monitoring.

Value = 0:

The deviation between setpoint and actual position remains within the positioning window (p29291).

Value = 1:

The condition of "Value = 0" is met, and there is no new setpoint (r29289.15=0) within the new setpoint monitoring time (p29293).

Value = 2:

The condition of "Value = 1" is met, and the actual speed stays close to zero.

If the condition of a monitoring mode is constantly met within the in-position monitoring time (p29292), the value of r29289.10 is set to 1.

Value:

0: Monitoring the deviation of position only

1: Monitoring the deviation and setpoint of position

2: Monitoring the actual speed, deviation and setpoint of position

Note

The monitoring is deactivated when p29291=0.

p29291 In-position window range

Data type: Unsigned32 **Visible in:** Standard display

Read permission: Read drive data or acknowledge messages

Write permission: Edit device configuration or drive applications

Can be changed in the operating state: Operation

Parameter group: Position monitoring

Unit: -

Min:	Max:	Factory setting:
0	2147483647	2194

Description: Sets the positioning window for the in-position monitoring function.

In-position monitoring starts when the deviation between setpoint and actual position lies within the window. The output of in-position state depends on the monitoring mode set by p29290.

Note

When p29291 = 0, the in-position monitoring function is deactivated.

p29292 In-position monitoring time

Data type: FloatingPoint32 **Visible in:** Standard display

Read permission: Read drive data or acknowledge messages

Write permission: Edit device configuration or drive applications

Can be changed in the operating state: Operation

Parameter group: Position monitoring

Unit: ms

Min:	Max:	Factory setting:
0.00 [ms]	30000.00 [ms]	0.00 [ms]

Description: Sets the monitoring time for the in-position monitoring.

If the condition of the selected in-position monitoring mode (p29290) is constantly met within the in-position monitoring time (p29292), the in-position state is set.

p29293 New setpoint monitoring time

Data type: FloatingPoint32 **Visible in:** Standard display

Read permission: Read drive data or acknowledge messages

Write permission:	Edit device configuration or drive applications	
Can be changed in the operating state:	Operation	
Parameter group:	Position monitoring	
Unit: ms		
Min:	**Max:**	**Factory setting:**
0.00 [ms]	1000.00 [ms]	1.00 [ms]

Description: Sets the monitoring time for the new pulse setpoint.
The new setpoint state is set (r29289.15 = 1), if there is new pulse input in the monitoring time.

p29294 Following error monitoring threshold

Data type: Unsigned32	**Visible in:** Standard display	
Read permission:	Read drive data or acknowledge messages	
Write permission:	Edit device configuration or drive applications	
Can be changed in the operating state:	Operation	
Parameter group:	Position monitoring	
Unit: -		
Min:	**Max:**	**Factory setting:**
0	2147483647	104857

Description: Sets the tolerance for the fast following error monitoring.
If the following error exceeds the selected tolerance, a fault is output.

Note
When p29294 = 0, the following error monitoring is deactivated.

c29300 Servo-on

Data type: Unsigned8	**Visible in:** Standard display
Read permission:	Read drive data or acknowledge messages
Write permission:	Edit device configuration or drive applications
Parameter group:	Drive enable signals
Unit: -	

Description: Signal for servo-on.

c29301 Clockwise over-travel limit

Variant:	S200 Basic PTI
Data type: Unsigned8	**Visible in:** Standard display
Read permission:	Read drive data or acknowledge messages
Write permission:	Edit device configuration or drive applications
Parameter group:	Limit
Unit: -	

Description: Signal for the active clockwise over-travel limit.

c29301 Clockwise over-travel limit

Variant:	S200 PTI
Data type: Unsigned8	**Visible in:** Standard display
Read permission:	Read drive data or acknowledge messages
Write permission:	Edit device configuration or drive applications
Parameter group:	Limit
Unit: -	

Description: Signal for the active clockwise over-travel limit.

c29302 Counterclockwise over-travel limit

Variant: S200 Basic PTI
Data type: Unsigned8 **Visible in:** Standard display
Read permission: Read drive data or acknowledge messages
Write permission: Edit device configuration or drive applications
Parameter group: Limit
Unit: -

Description: Signal for the active counterclockwise over-travel limit.

c29302 Counterclockwise over-travel limit

Variant: S200 PTI
Data type: Unsigned8 **Visible in:** Standard display
Read permission: Read drive data or acknowledge messages
Write permission: Edit device configuration or drive applications
Parameter group: Limit
Unit: -

Description: Signal for the active counterclockwise over-travel limit.

c29303 Clockwise rotation

Variant: S200 PTI
Data type: Unsigned8 **Visible in:** Standard display
Read permission: Read drive data or acknowledge messages
Write permission: Edit device configuration or drive applications
Parameter group: Drive enable signals
Unit: -

Description: Signal for clockwise rotation.

c29304 Counterclockwise rotation

Variant: S200 PTI
Data type: Unsigned8 **Visible in:** Standard display
Read permission: Read drive data or acknowledge messages
Write permission: Edit device configuration or drive applications
Parameter group: Drive enable signals
Unit: -

Description: Signal for counterclockwise rotation.

c29305 Control mode switching

Variant: S200 PTI
Data type: Unsigned8 **Visible in:** Standard display
Read permission: Read drive data or acknowledge messages
Write permission: Edit device configuration or drive applications
Parameter group: Quick commissioning
Unit: -

Description: Signal for control mode switching.

p29320.0...2 Signal forced

Data type: Unsigned32 **Visible in:** Standard display
Read permission: Read drive data or acknowledge messages
Write permission: Edit device configuration or drive applications
Can be changed in the operating state: Operation
Parameter group: Digital inputs
Unit: -

Min:	Max:	Factory setting:
-	-	0000 bin

Description: If one or more bits are set to be high, the corresponding funcional signals are forced to be logical high signals.

Bit array:

Bit	Signal name	1 signal	0 signal
00	SON signal	Force ON	No force
01	CWL signal	Force ON	No force
02	CCWL signal	Force ON	No force

p29321 Over-travel signal (CWL/CCWL) message type

Data type: Integer16 **Visible in:** Standard display
Read permission: Read drive data or acknowledge messages
Write permission: Edit device configuration or drive applications
Can be changed in the operating state: Ready for operation
Parameter group: Limit
Unit: -

Min:	Max:	Factory setting:
0	1	0

Description: Sets the message type of the over-travel signal CWL/CCWL.

Value:
0: Shows message type as fault
1: Shows message type as alarm

p29340 Warning 1 assigned to digital output

Data type: Integer16 **Visible in:** Standard display
Read permission: Read drive data or acknowledge messages
Write permission: Edit device configuration or drive applications
Can be changed in the operating state: Ready for operation
Parameter group: I/O configuration
Unit: -

Min:	Max:	Factory setting:
1	7	1

Description: Defines conditions for Warning1.
1: Motor overload protection warning: 85% of motor overload threshold has been reached.
2: Fan warning: The predicted lifespan of the fan has expired. Replacement is needed.
3: Encoder error
4: Motor overtemperature warning.
5: Capacitor warning: The service life of the capacitor has expired. Replacement is needed.
6: CWL warning: Clockwise over-travel limit
7: CCWL warning:Counterclockwise over-travel limit

Value:
1: Motor overload protection
2: Fan life time

3: Encoder error
4: Motor overtemperature
5: Capacitor life time
6: Clockwise over-travel limit
7: Counterclockwise over-travel limit

p29341 Warning 2 assigned to digital output

Data type: Integer16	**Visible in:** Standard display	
Read permission:	Read drive data or acknowledge messages	
Write permission:	Edit device configuration or drive applications	
Can be changed in the operating state:	Ready for operation	
Parameter group:	I/O configuration	
Unit: -		
Min:	**Max:**	**Factory setting:**
1	7	3

Description:
Defines conditions for Warning2.
1: Motor overload protection warning: 85% of motor overload threshold has been reached.
2: Fan warning: The predicted lifespan of the fan has expired. Replacement is needed.
3: Encoder error
4: Motor overtemperature warning.
5: Capacitor warning: The service life of the capacitor has expired. Replacement is needed.
6: CWL warning: Clockwise over-travel limit
7: CCWL warning:Counterclockwise over-travel limit

Value:
1: Motor overload protection
2: Fan life time
3: Encoder error
4: Motor overtemperature
5: Capacitor life time
6: Clockwise over-travel limit
7: Counterclockwise over-travel limit

p29342 Reference frequency assigned to pulse input frequency

Variant:	S200 PTI	
Data type: Integer16	**Visible in:** Standard display	
Read permission:	Read drive data or acknowledge messages	
Write permission:	Edit device configuration or drive applications	
Can be changed in the operating state:	Ready for operation	
Parameter group:	Position monitoring	
Unit: -		
Min:	**Max:**	**Factory setting:**
1	4	1

Description:
Sets the reference frequency of the pulse input frequency.
1: reference 1k
2: reference 10k
3: reference 100k
4: reference 1000k

Value:
1: Pulse input frequency (reference 1k)
2: Pulse input frequency (reference 10k)

3: Pulse input frequency (reference 100k)
4: Pulse input frequency (reference 1000k)

p29343 Reference frequency assigned to remaining number of pulses

Variant: S200 PTI
Data type: Integer16 **Visible in:** Standard display
Read permission: Read drive data or acknowledge messages
Write permission: Edit device configuration or drive applications
Can be changed in the operating state: Ready for operation
Parameter group: Position monitoring
Unit: -

Min:	Max:	Factory setting:
1	4	1

Description: Sets the reference frequency of the remaining number of pulses.
1: reference 1k
2: reference 10k
3: reference 100k
4: reference 1000k

Value:
1: Remaining number of pulse (reference 1k)
2: Remaining number of pulses (reference 10k)
3: Remaining number of pulses (reference 100k)
4: Remaining number of pulses (reference 1000k)

r29350 Pulse input frequency

Variant: S200 PTI
Data type: FloatingPoint32 **Visible in:** Standard display
Read permission: Read drive data or acknowledge messages
Parameter group: Position monitoring
Unit: -

Description: Displays the pulse input frequency.

r29351 Remaining number of pulses

Variant: S200 PTI
Data type: FloatingPoint32 **Visible in:** Standard display
Read permission: Read drive data or acknowledge messages
Parameter group: Position monitoring
Unit: -

Description: Displays the remaining number of pulses.

r29404.0...5 DO status word

Data type: Unsigned32 **Visible in:** Standard display
Read permission: Read drive data or acknowledge messages
Parameter group: Digital outputs
Unit: -

Description: Displays the status word of the digital outputs.

Bit array:

Bit	Signal name	1 signal	0 signal
00	Ready for servo on	Yes	No
01	Current control mode	Yes	No

02	Overload level reached	Yes	No
03	Speed reached	Yes	No
04	Warning1	Yes	No
05	Warning2	Yes	No

r60044 SI message buffer counter changes

Variant: S200 PTI
Data type: Unsigned16 **Visible in:** Extended display
Read permission: Read drive data or acknowledge messages
Parameter group: Safety Integrated
Unit: -

Description: Displays the changes of the safety message buffer.
This counter is incremented every time that the safety message buffer changes.

Recommendation: This is used to check whether the safety message buffer has been read out consistently.

Dependency: See also: r9753, r9754, r9755, r9756, r60045, r60048, r60049, p60052

r60045[0...63] SI message code

Variant: S200 PTI
Data type: Unsigned16 **Visible in:** Extended display
Read permission: Read drive data or acknowledge messages
Parameter group: Safety Integrated
Unit: -

Description: Displays the numbers of safety messages that have occurred.

Dependency: See also: r9753, r9754, r9755, r9756, r60044, r60048, r60049, p60052

Note
The messages type "safety message" (Cxxxxx) are entered in the message fault buffer.
Message buffer structure (principle):
r60045[0], r60048[0], r60049[0], r9753[0], r9754[0], r9755[0], r9756[0] --> safety message 1 (oldest active message) of the actual message case.
...
r60045[7], r60048[7], r60049[7], r9753[7], r9754[7], r9755[7], r9756[7] --> safety message 8 (latest active message) of the actual message case,

Safety messages that have gone are automatically acknowledged.
History of acknowledged messages:
r60045[8], r60048[8], r60049[8], r9753[8], r9754[8], r9755[8], r9756[8] --> safety message 1 of the 1st acknowledged message case,
...
r60045[16], r60048[16], r60049[16], r9753[16], r9754[16], r9755[16], r9756[16] --> safety message 1 of the 2nd acknowledged message case,
...
r60045[56], r60048[56], r60049[56], r9753[56], r9754[56], r9755[56], r9756[56] --> safety message 1 of the 7th acknowledged message case,
...
r60045[63], r60048[63], r60049[63], r9753[63], r9754[63], r9755[63], r9756[63] --> safety message 8 (oldest gone message) of the 7th acknowledged message case,

r60047[0...63] SI message number

Variant: S200 PTI
Data type: Unsigned16 **Visible in:** Extended display
Read permission: Read drive data or acknowledge messages

Parameter group: Safety Integrated

Unit: -

Description: Displays the numbers of safety messages that have occurred.

Dependency: See also: r9753, r9754, r9755, r9756, r60044, r60048, r60049, p60052

Note

The messages type "safety message" (Cxxxxx) are entered in the message fault buffer.
Message buffer structure (principle):
r60045[0], r60048[0], r60049[0], r9753[0], r9754[0], r9755[0], r9756[0] --> safety message 1 (oldest active message) of the actual message case.
...
r60045[7], r60048[7], r60049[7], r9753[7], r9754[7], r9755[7], r9756[7] --> safety message 8 (latest active message) of the actual message case,

Safety messages that have gone are automatically acknowledged.
History of acknowledged messages:
r60045[8], r60048[8], r60049[8], r9753[8], r9754[8], r9755[8], r9756[8] --> safety message 1 of the 1st acknowledged message case,
...
r60045[16], r60048[16], r60049[16], r9753[16], r9754[16], r9755[16], r9756[16] --> safety message 1 of the 2nd acknowledged message case,
...
r60045[56], r60048[56], r60049[56], r9753[56], r9754[56], r9755[56], r9756[56] --> safety message 1 of the 7th acknowledged message case,
...
r60045[63], r60048[63], r60049[63], r9753[63], r9754[63], r9755[63], r9756[63] --> safety message 8 (oldest gone message) of the 7th acknowledged message case,

r60048[0...63] SI message time received in milliseconds

Variant: S200 PTI

Data type: Unsigned32 **Visible in:** Extended display

Read permission: Read drive data or acknowledge messages

Parameter group: Safety Integrated

Unit: ms

Description: Displays the relative system runtime in milliseconds when the safety message occurred.

Dependency: See also: r9753, r9754, r9755, r9756, r60044, r60045, r60049, p60052

r60049[0...63] SI message value

Variant: S200 PTI

Data type: Integer32 **Visible in:** Extended display

Read permission: Read drive data or acknowledge messages

Parameter group: Safety Integrated

Unit: -

Description: Displays the additional information about the safety message that occurred (as integer number).

Dependency: See also: r9753, r9754, r9755, r9756, r60044, r60045, r60048, p60052

p60052 SI message cases counter

Variant: S200 PTI

Data type: Unsigned16 **Visible in:** Extended display

Read permission: Read drive data or acknowledge messages

Write permission: Edit device configuration or drive applications

Can be changed in the operating state: Operation

Parameter group:	Safety Integrated	
Unit: -		
Min:	**Max:**	**Factory setting:**
0	65535	0

Description: Number of safety message cases that have occurred since the last reset.

Dependency: The safety message buffer is cleared by resetting the parameter to 0.
See also: r9753, r9754, r9755, r9756, r60044, r60045, r60048, r60049

A.4 Assembling cables

Description

Cables are important components of a servo drive system. They are essential to the stable and reliable operation of the system.

Siemens recommends that you use Siemens cable assemblies and connectors. All Siemens cable assemblies and connectors are tested and compliant with CE standards and EMC requirements. If you use non-Siemens cable assemblies, for example, cables made by yourself or third-party cables, Siemens does not guarantee that the servo drive system meets CE standards. In this case, if the drive system is required to be operated in a CE-compliant environment, you should reapply for the certification.

Siemens does not provide any guarantee or warranty regarding the functionality, reliability or quality of non-Siemens cables used with the servo drive system, and is not responsible for device (e.g. motor and converter) damages due to use with non-Siemens cables.

Siemens allows you to assemble your own cables in case that, for example, cables of special length are needed; therefore, Siemens provides instructions for assembling cables and connectors. Siemens does not guarantee that your cables meet CE standards, EMC requirements, or requirements for the degree of protection of the connected devices.

When assembling the cables, observe the following instructions:

- The assembly must be performed by qualified personnel.
- Prepare appropriate tools, raw cables, and Siemens connectors.
- To avoid splaying or fraying of the strands, strip the wires squarely and evenly.

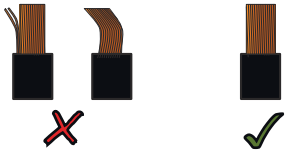

- To avoid short-circuiting between wires and unused pins on the connector, cover the unused pins with heat-shrinkable tubes.

More information

For more information about Siemens cables and connectors, see Section "Cables and connectors (Page 134)".

A.4.1 Assembling connectors on the converter side

A.4.1.1 Assembling the cable lugs

Overview

This section offers general assembly instructions for cable lugs and is applicable to the following cables:

- Mains supply cable
- 24 V DC power supply cable
- Motor holding brake cable
- Motor power cable
- External braking resistor cable
- STO connection cable

Requirement

You have prepared appropriate tools, raw cables, and cable lugs.

Procedure

1. Remove the outer sheath of the cable.
2. Remove the insulation from the conductor. For more information about stripping length, see Section "Cables and connectors (Page 134)".

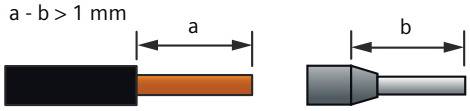

3. Insert the stripped end into the cable end sleeve.

4. Crimp the cable end sleeve.

A.4.1.2 Assembling the encoder connector

Overview

The Siemens IX-C connector is used for encoder connection to the converter. It consists of the following components:

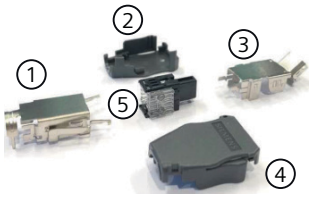

1	Shielding A	4	Front cover
2	Back cover	5	Insulation-displacement contact (IDC) terminal
3	Shielding B		

Figure A-1 IX-C connector

Requirement

You have prepared appropriate tools, a raw cable, and the Siemens IX-C connector.

Procedure

1. Prepare the cable.
   - Remove the outer sheath of the cable by 17 mm.
   - Remove the cable shield by 12 mm.
   - Fold the remaining cable shield backward over the cable sheath, and wrap the folded cable shield with copper tape.

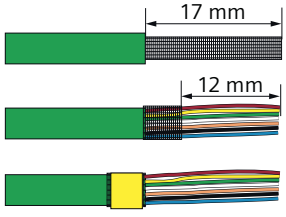

2. Arrange the conductors. The image below is for illustration purpose only. For detailed instructions on the conductor signals and colors, refer to Step 3 and Chapter "Wiring (Page 150)".

3. Insert the conductors into the connector with the correct order, pushing through until the conductor ends reach the end of the connector.

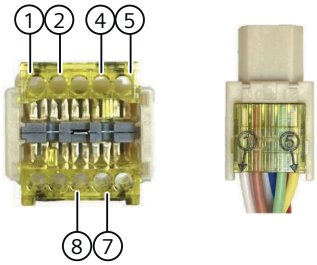

Pin	Signal	Pin	Signal
1	Data_P	5	Clock_N
2	Data_N	7	P_Supply
4	Clock_P	8	M

4. Insert the connector into the IDC slot in the crimping tool and crimp the connector. Make sure that red, yellow, and green conductors face up.

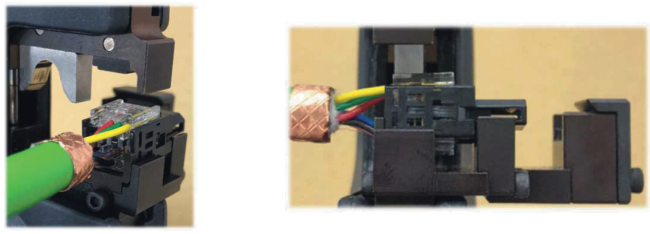

5. Assemble the shielding A.

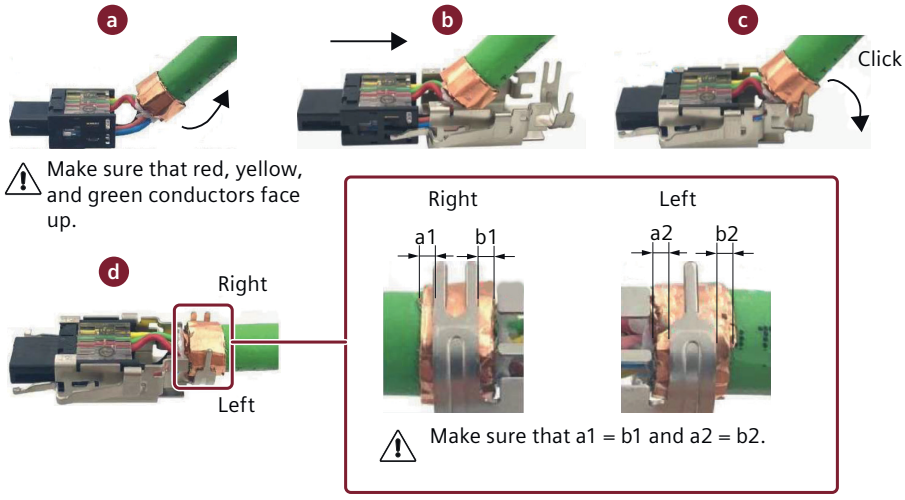

6. Assemble the shielding B.

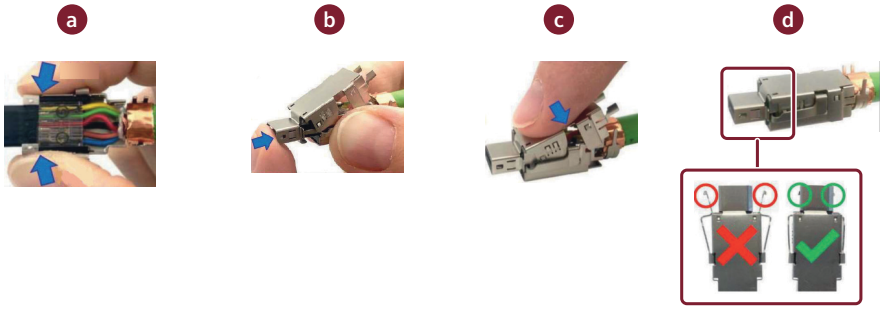

Make sure that the installed shielding B is level. If it tilts upward, adjust as follows.

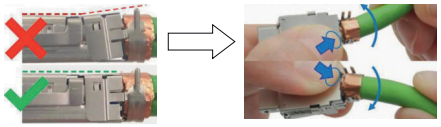

7. Insert the connector into the cable crimp slot in the crimping tool and crimp the cable shield.

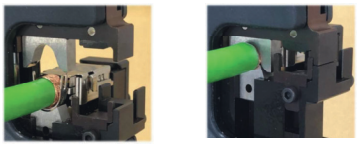

8. Install the housing.

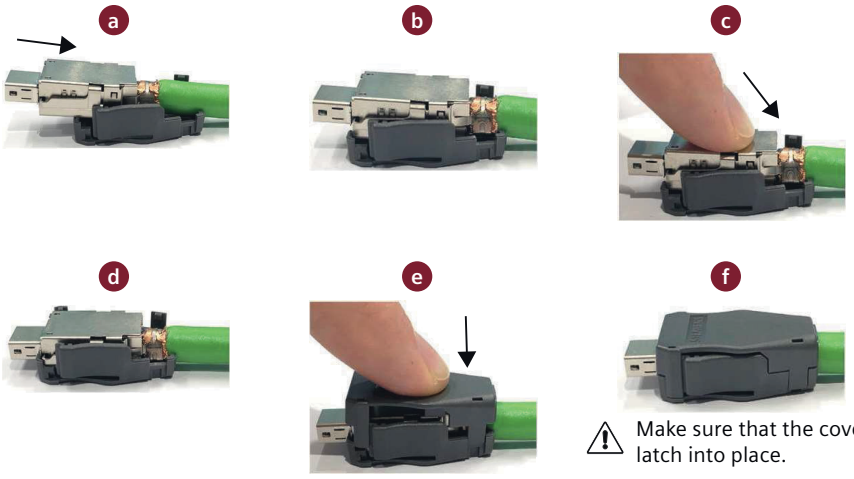

⚠ Make sure that the covers latch into place.

A.4.1.3 Assembling the setpoint connector

Requirement

You have prepared appropriate tools, raw cables, and the Siemens 50-pin MDR connector.

Procedure

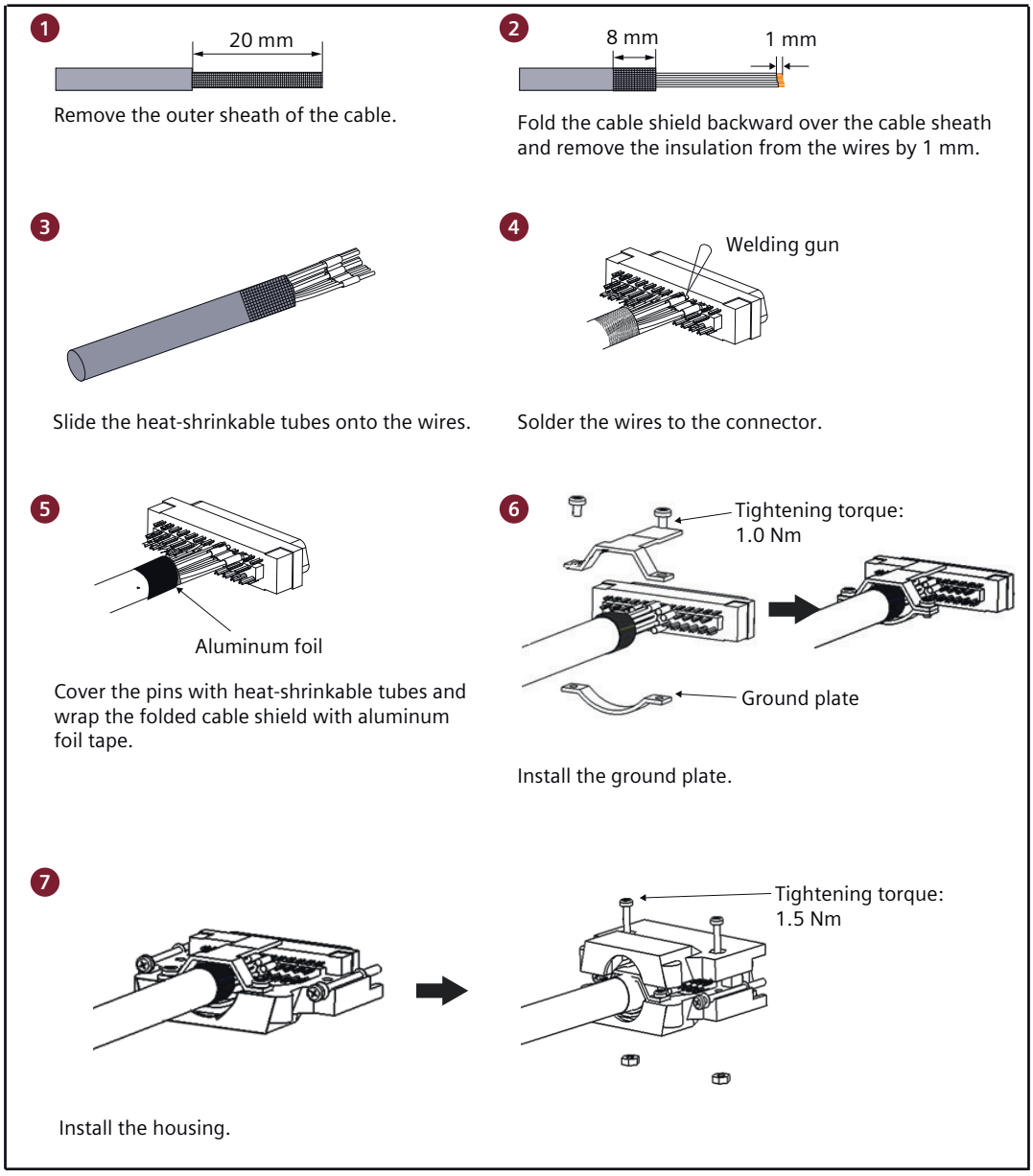

Figure A-2 Assembling the setpoint cable

Note

For better EMC performance, Siemens recommends that you solder the cable shield to the metal housing of the connector.

A.4.2 Assembling connectors on the motor side

Note

If you use non-Siemens motor cable assemblies and connectors, to ensure compliance with the degree of protection of the connected motors, it is important to verify that the cable assemblies and connectors meet the necessary requirements.

A.4.2.1 Assembling the hybrid plug for 1FL2 motors, shaft heights 20, 30, and 40

Overview

The Siemens hybrid plug is used for connecting the converter to the motor and the encoder in the motor. It consists of the following components:

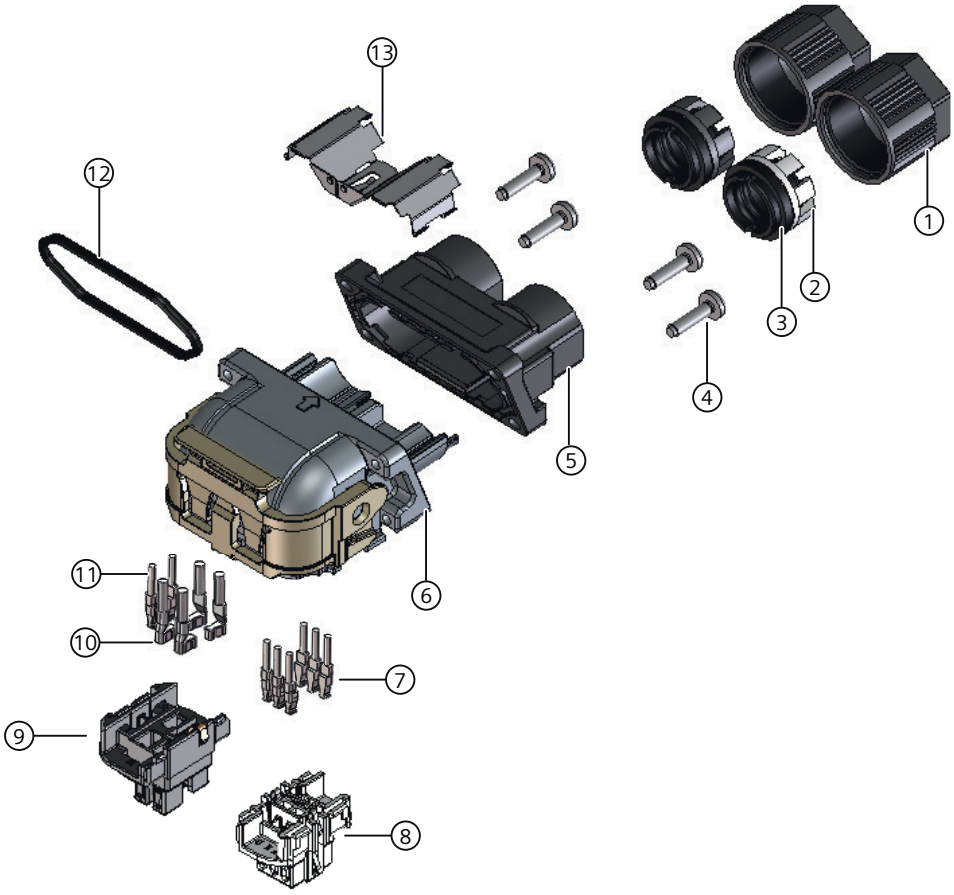

①	Cap	⑧	Signal unit case
②	Clamp	⑨	Power unit case
③	Gasket	⑩	Hybrid power contact
④	M2 screw	⑪	Hybrid brake contact
⑤	Seal case	⑫	Sealing ring
⑥	Housing	⑬	Shield holding plate
⑦	Hybrid signal contact		

Figure A-3 Hybrid plug overview

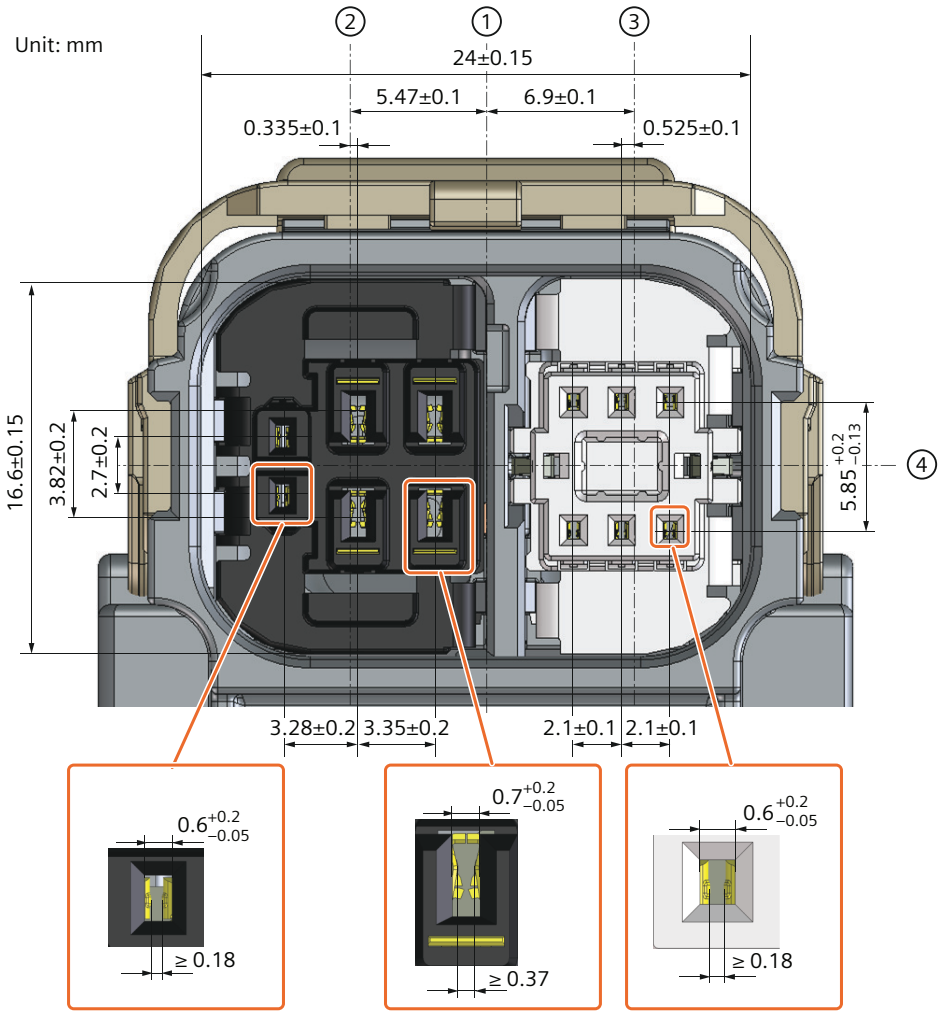

① Vertical centerline of the contact section of the housing
② Vertical centerline of the power unit case
③ Vertical centerline of the signal unit case
④ Horizontal centerline of the contact section of the housing

Figure A-4 Hybrid plug dimensions

Requirement

You have prepared the following items:

- Raw cables
  Reserve 58 mm at the ends of the cables for termination into the hybrid connector.

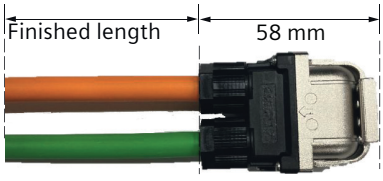

- Siemens hybrid plug

- Copper tapes
- Scissor
- Screwdriver
- Crimping tool

Procedure

1. Prepare the power cable.
   - Slide the cap, the clamp, and the gasket onto the power cable.
   - Remove the outer sheath of the cables by 25 mm ± 1 mm.
   - Loosen the braided shield of the cable and fold the shield backward over the cable sheath.
   - Remove the foil shield. If the power cable is integrated with the brake conductors, additionally loosen the braided shield of the brake cable and fold its shield backward over the cable sheath.
   - Cut the folded shield to make sure that the length of the folded shield is 8 mm ± 1 mm. Remove the debris to ensure cable insulation.
   - Wrap around the shield 1.5 to 2 times with copper tapes.

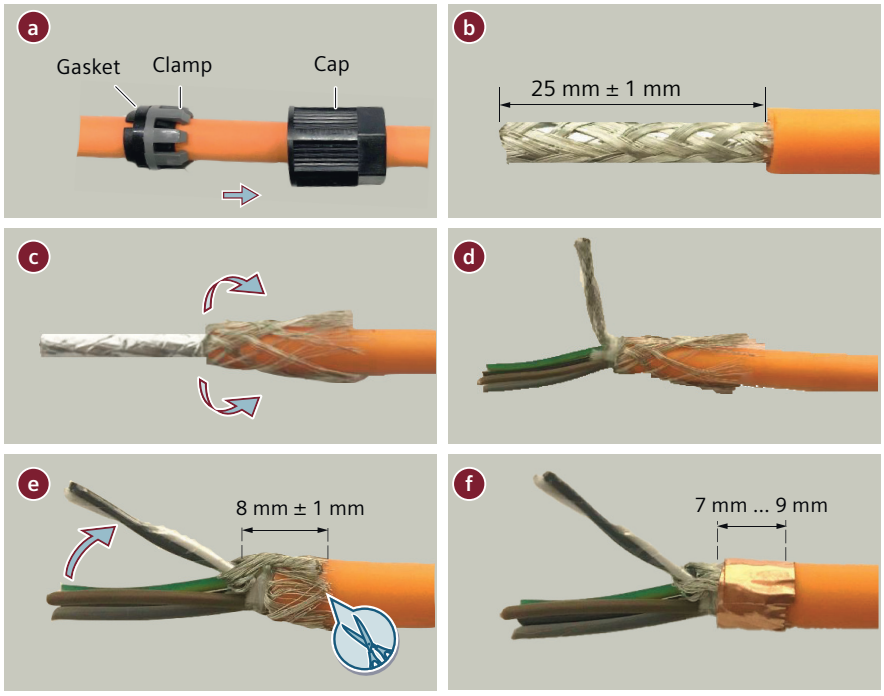

2. Prepare the encoder cable.
   - Slide the cap, the clamp, and the gasket onto the encoder cable.
   - Remove the outer sheath of the cables by 25 mm ± 1 mm.
   - Loosen the braided shield of the cable and fold the shield backward over the cable sheath. Cut the folded shield to make sure that the length of the folded shield is 8 mm ± 1 mm. Remove the debris to ensure cable insulation.
   - Wrap around the shield 1.5 to 2 times with copper tapes.
   - Remove the foil shield.

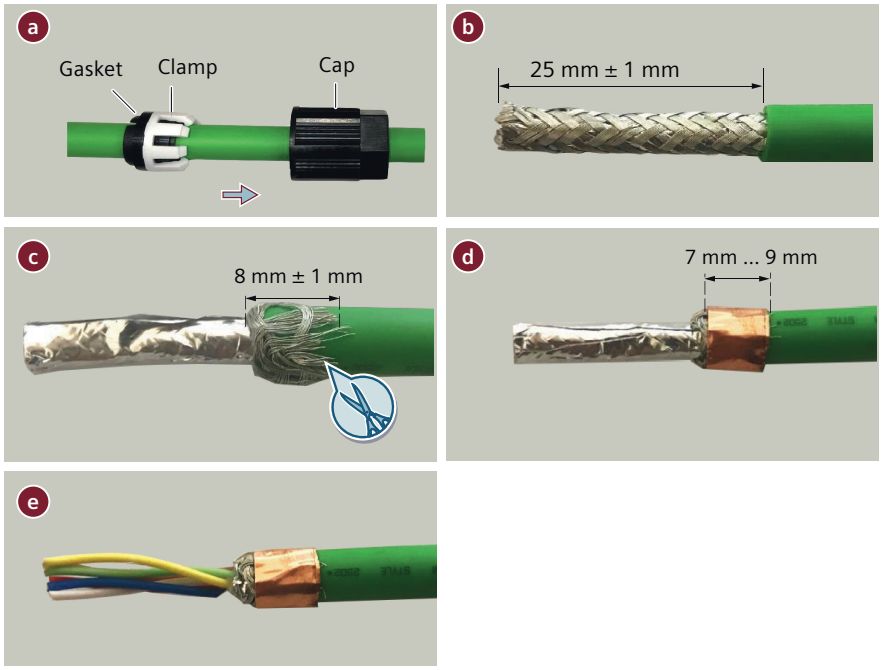

3. Arrange and cut the conductors.
   The conductor length required for termination into the hybrid plug varies depending on the variant of the hybrid plug and the contacts. Conductors that are close to the cable outlet should be cut 3 mm more.

Conductor	Conductor length requirement (mm)	
	Drive-end variant	Non-drive end variant
Power conductor U	25 ± 1	22 ± 1
Power conductor V	22 ± 1	25 ± 1
Power conductor W	25 ± 1	22 ± 1
PE conductor	22 ± 1	25 ± 1
Brake conductor +	25 ± 1	25 ± 1
Brake conductor -	25 ± 1	25 ± 1
Signal conductors A, B, and C	22 ± 1	25 ± 1
Signal conductors D, E, and F	25 ± 1	22 ± 1

The following images show the conductor length requirement of the drive-end hybrid plug.

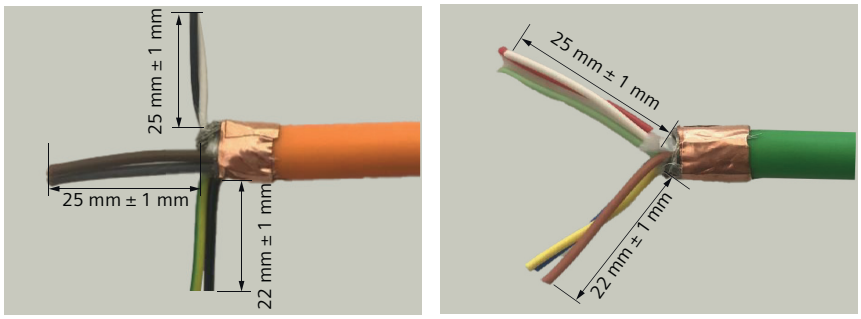

4. Strip the power and PE conductors by 2.4 mm ± 0.5 mm, and encoder and brake conductors by 2.2 mm ± 0.5 mm.

5. Crimp the contacts onto the conductors. Make sure that the lance side of the contacts face outwards.

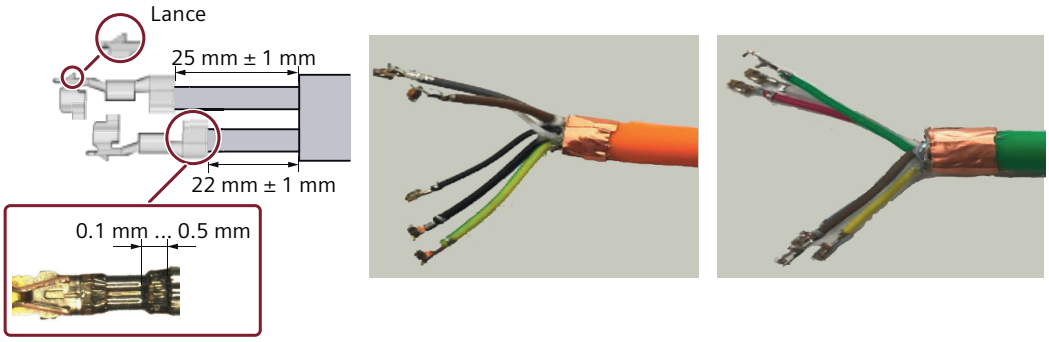

6. Slide the power and signal cables through the seal case and the housing.
Avoid deforming the contact tips. Siemens recommends that you protect the conductors with a tape during the process.

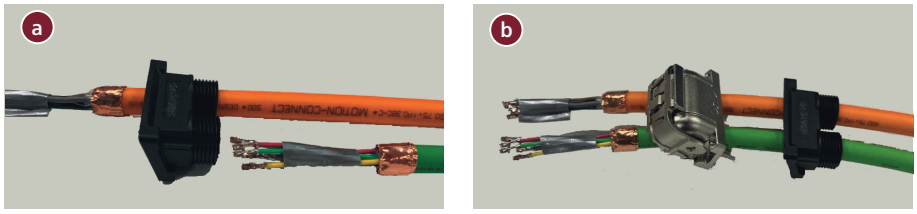

7. Insert the power and brake contacts into the power unit case and adjust the conductors to make sure that the cable does not rise up and that except for the mating surfaces, the contacts are enclosed in the unit case.

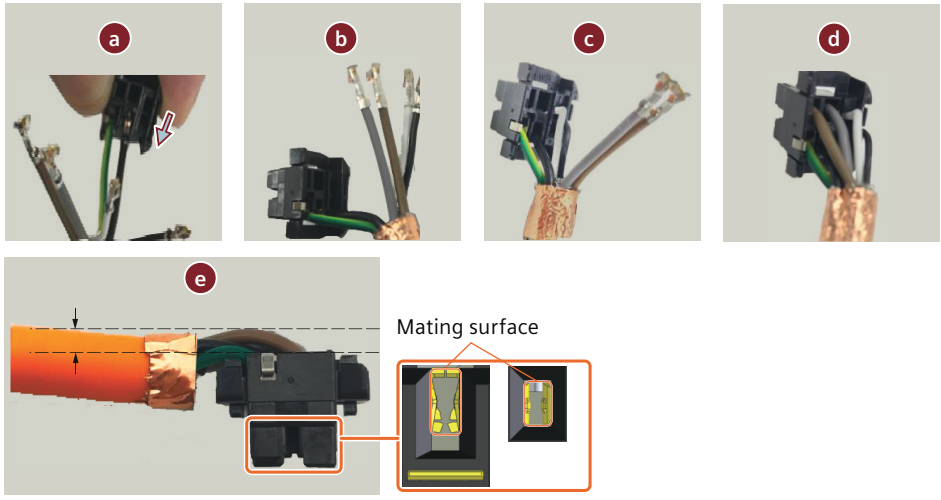

8. Insert the signal contacts into the signal unit case and adjust the conductors to make sure that the cable does not rise up and that except for the mating surfaces, the contacts are enclosed in the unit case.

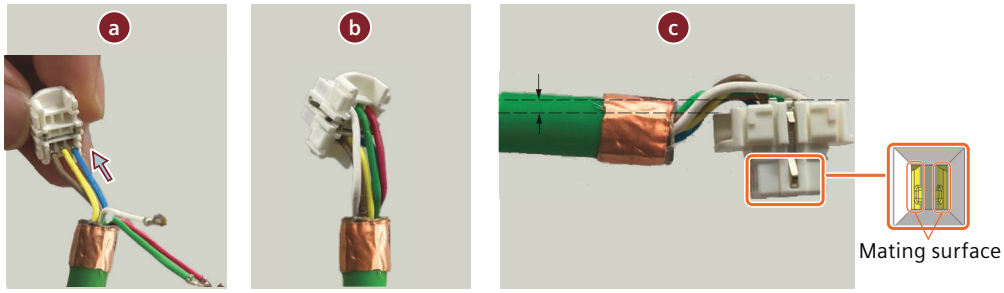

9. Insert the signal and the power unit cases into the housing by pulling the cables back. Make sure that the signal and the power unit cases are latched to the housing.

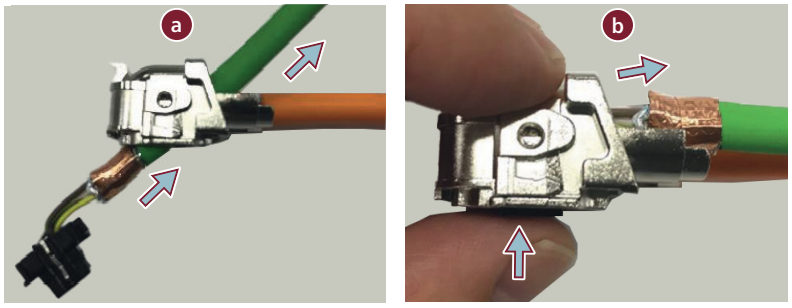

10. Insert the shield holding plate into the housing.

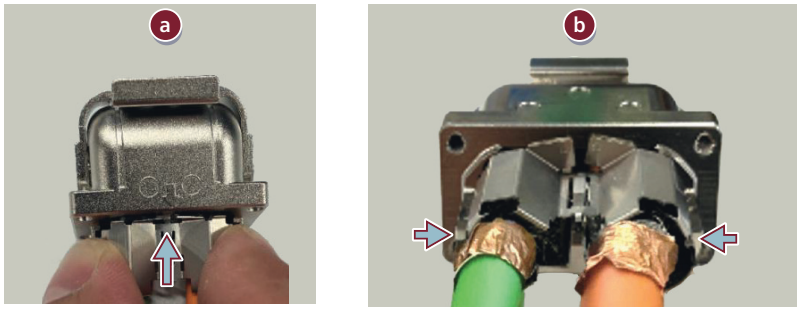

11. Assemble the housing and the seal case.
    - Hold the shield holding plate and slide the seal case to the housing.
    - Tighten the M2 screws with a tightening torque of 0.18 Nm ± 0.01 Nm.

12. Insert the gaskets and the clamps to the seal case.

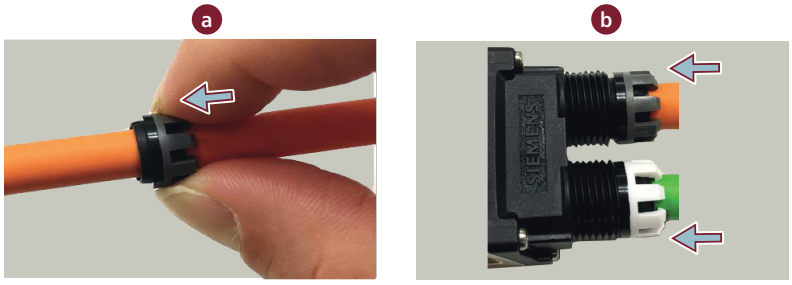

13. Tighten the caps.
    - Rotate the caps in the counterclockwise direction to match the threads of the seal case and the caps.
    - Rotate the caps in the clockwise direction.
    - Tighten the caps by wrench with a tightening torque of 1.5 Nm ± 0.01 Nm.

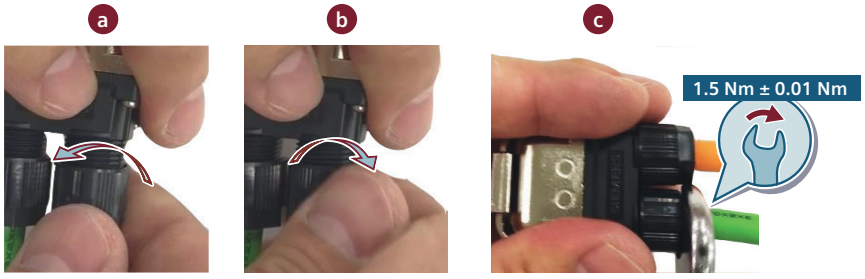

More information

For more information about connecting the converter and the motor, see Section "Connecting the motor (Page 139)".

A.4.2.2 Disassembling the hybrid plug for 1FL2 motors, shaft heights 20, 30, and 40

Requirement

You have prepared the following items:

- Assembled Siemens hybrid plug
- Pin removal tool
- Screwdriver

Procedure

1. Remove the signal and the power unit cases from the housing.
   - Insert the screwdriver into the unit cases from the side of the cable outlet.
   - Press down the tip of the screwdriver to remove the unit cases from the housing.

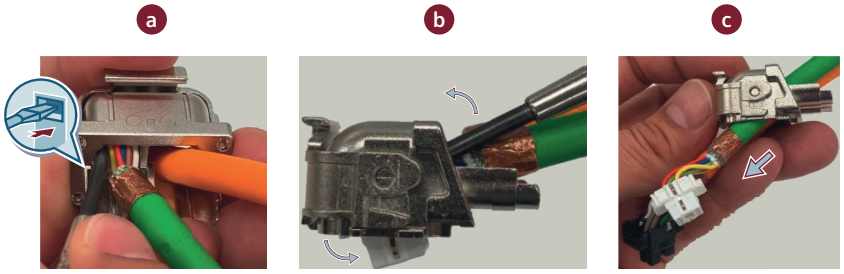

2. Remove the hybrid brake contacts from the power unit case.
   - Insert the tip of the pin removal tool into the gap between the contact and its latch.
   - Lift up the latch and pull out the contact.

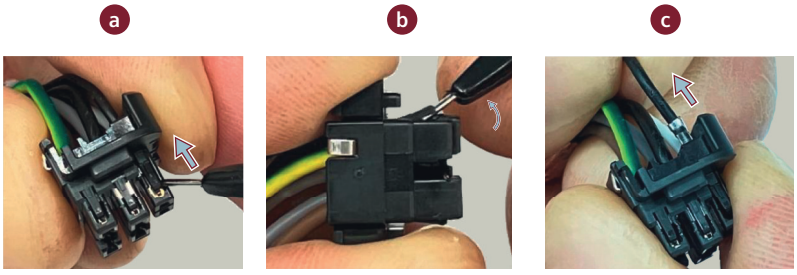

3. Repeat Step 2 to remove the hybrid power contacts from the power unit case.

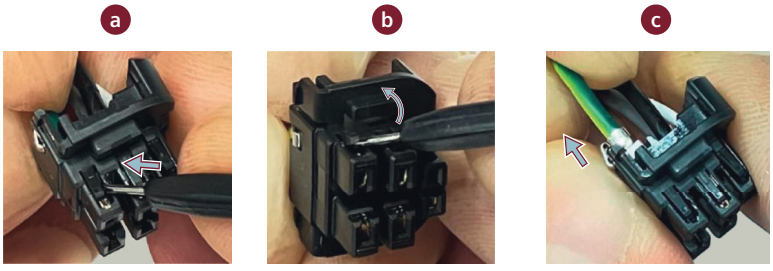

4. Repeat Step 2 to remove the hybrid signal contacts from the signal unit case.

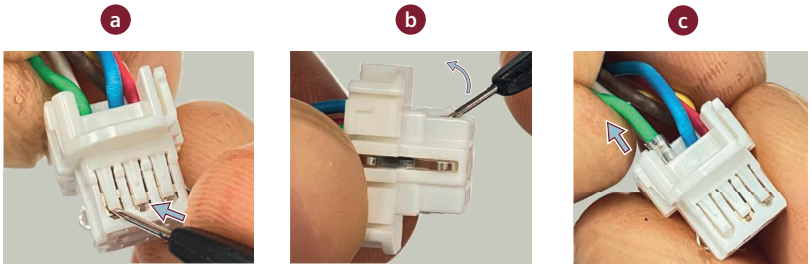

Result

You have disassembled the hybrid plug.

Note

The removal of contacts deforms the signal unit case; therefore, the disassembled signal unit case cannot be reused.

Siemens does not recommend that you reuse the disassembled power unit case. Before reusing the power unit case, check to make sure that there is no deformation or damage.

A.4.2.3 Assembling connectors for 1FL2 motors, shaft heights 48 and 52

Overview

This section offers assembly instructions for power and encoder cables of the 1FL2 motors shaft heights 48 and 52.

Requirement

You have prepared appropriate tools, raw cables, and the Siemens M17 connector.

Procedure

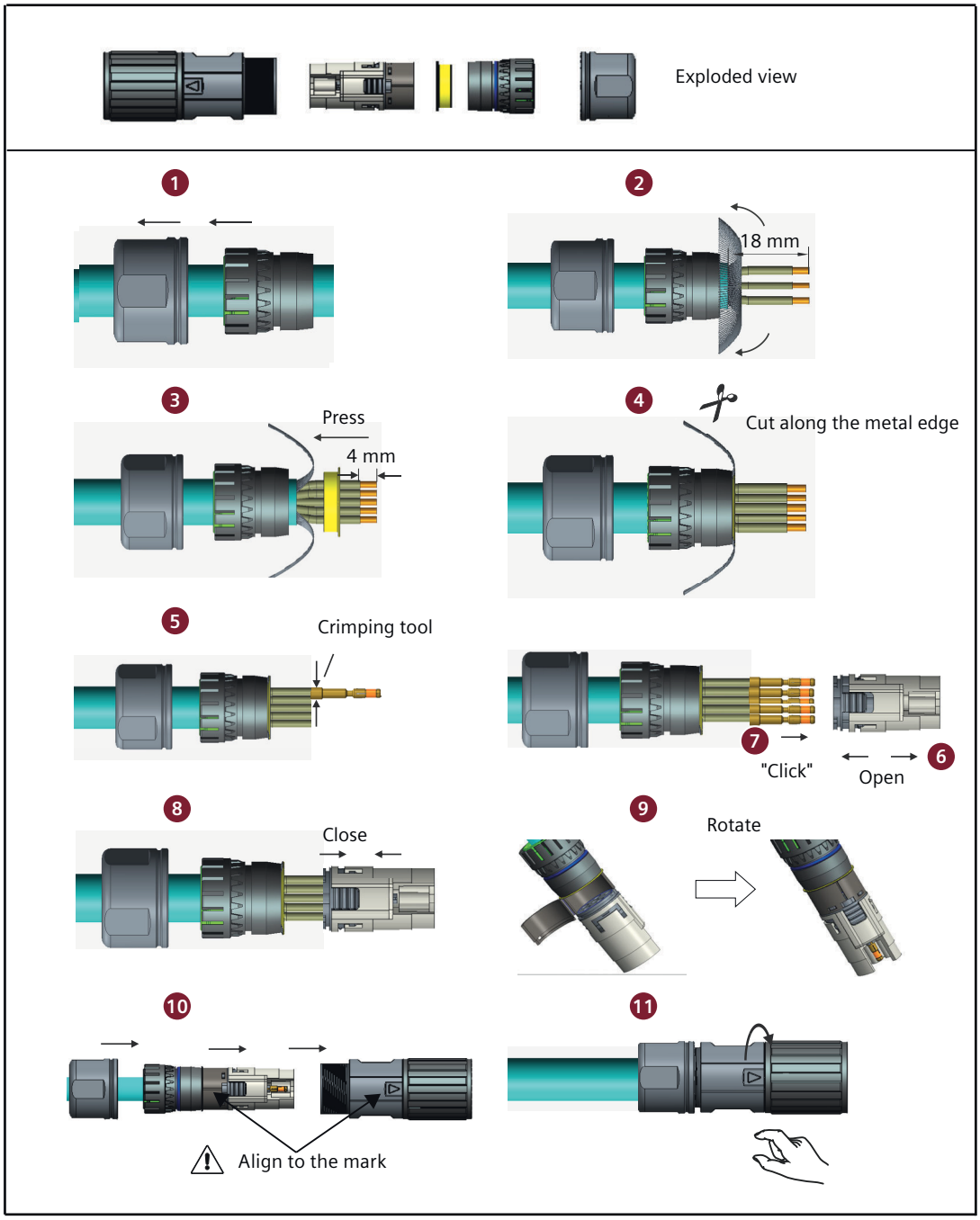

Figure A-5 Assembling the power or encoder cable of the 1FL2 motor shaft height 48 or 52

More information

For more information about connecting the converter and the motor, see Section "Connecting the motor (Page 139)".

A.4.2.4 Assembling connectors for 1FL2 motors, shaft heights 45, 65, and 90

Assembling the power connector

Requirement

You have prepared appropriate tools, raw cables, and the Siemens M23 connector.

Procedure

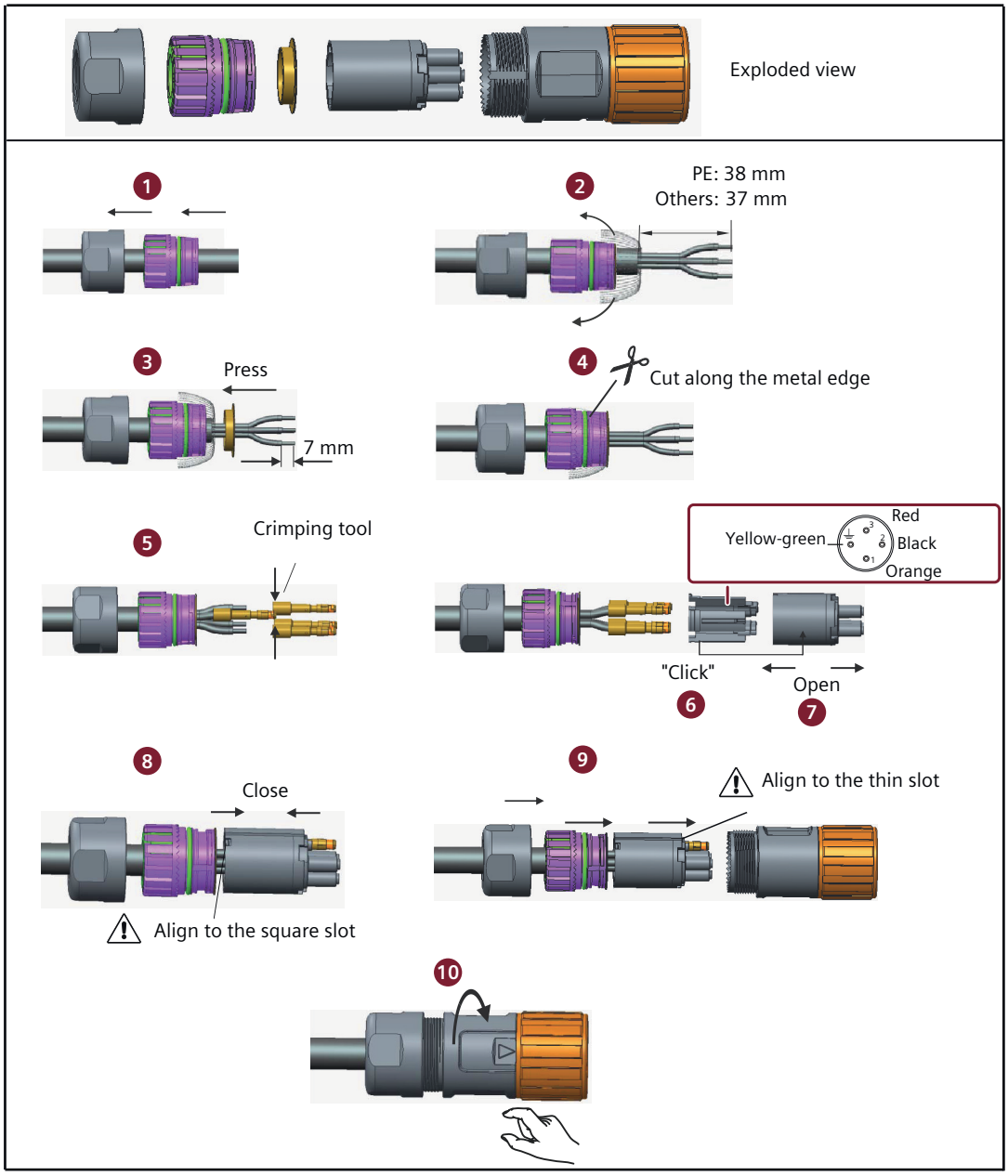

Figure A-6 Assembling the power cable of the 1FL2 motor shaft height 45, 65, or 90

More information

For more information about connecting the converter and the motor, see Section "Connecting the motor (Page 139)".

Assembling the encoder connector

Requirement

You have prepared appropriate tools, raw cables, and the Siemens M17 connector.

Procedure

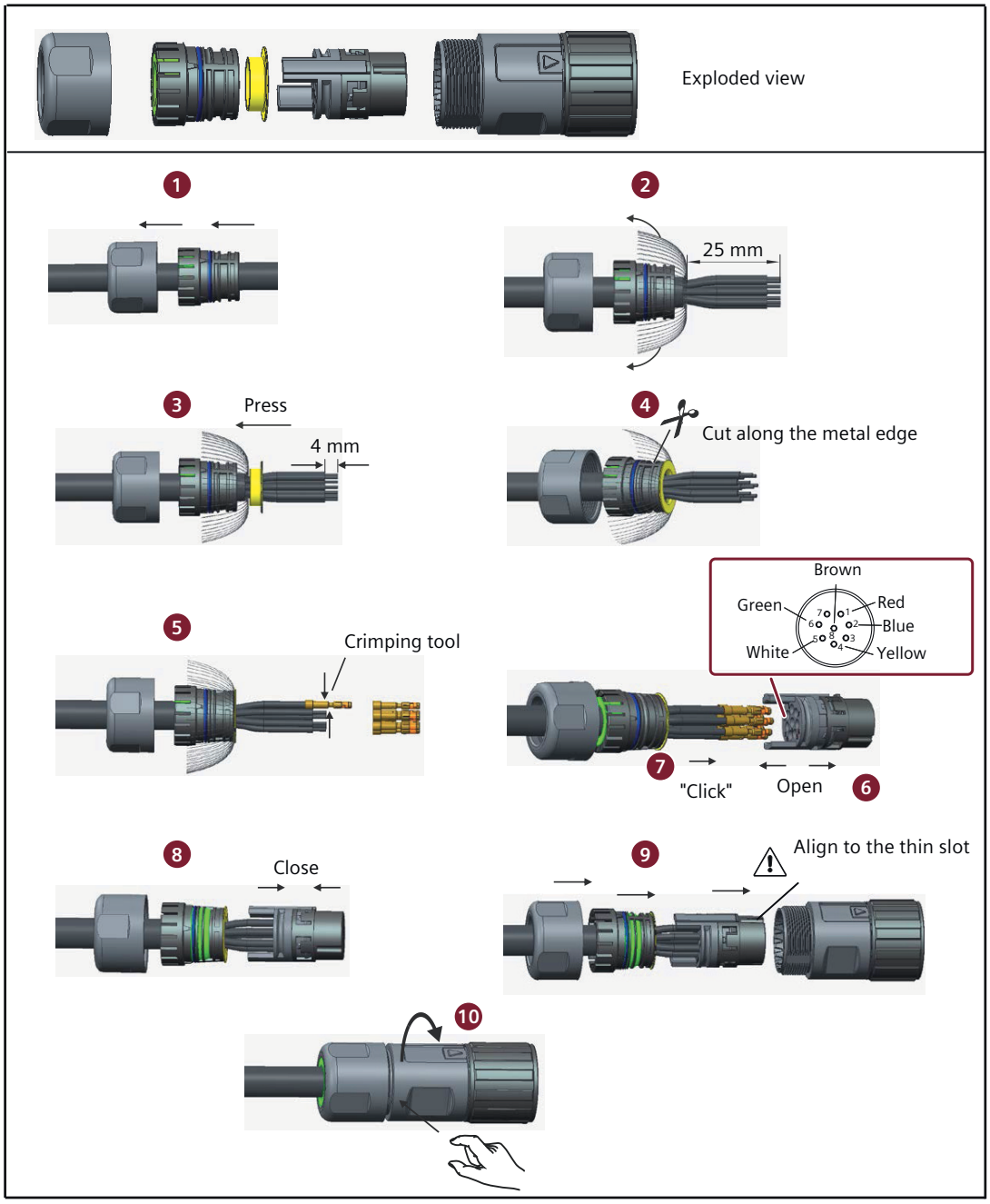

Figure A-7 Assembling the encoder cable of the 1FL2 motor shaft height 45, 65, or 90

More information

For more information about connecting the converter and the motor, see Section "Connecting the motor (Page 139)".

Assembling the motor holding brake connector

Requirement

You have prepared appropriate tools, raw cables, and the Siemens M17 connector.

Procedure

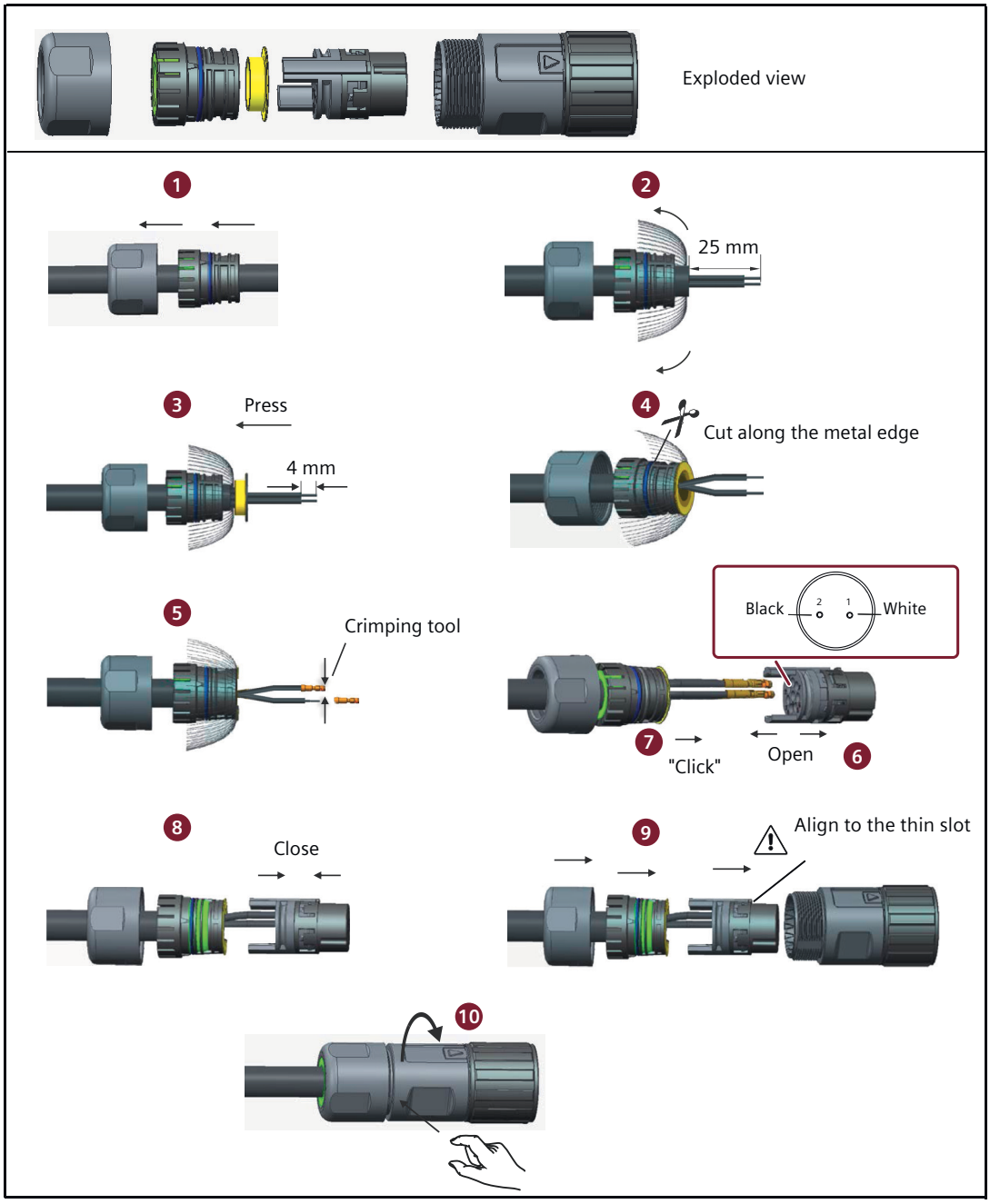

Figure A-8 Assembling the holding brake cable the 1FL2 motor shaft height 45, 65, or 90

More information

For more information about connecting the converter and the motor, see Section "Connecting the motor (Page 139)".

A.5 Motor selection

A.5.1 Selection procedure

Overview

The following section shows the principal steps for selecting a suitable motor. Then you can calculate the moment of inertia of your system and the braking energy accordingly.

Requirement

None

Procedure

Proceed as follows to select a motor:

1. Determine the mechanism type as well as the detailed data of the related mechanical parts, such as ball screw lead, diameter, lead, and gear diameter. Three mechanism types are shown below:

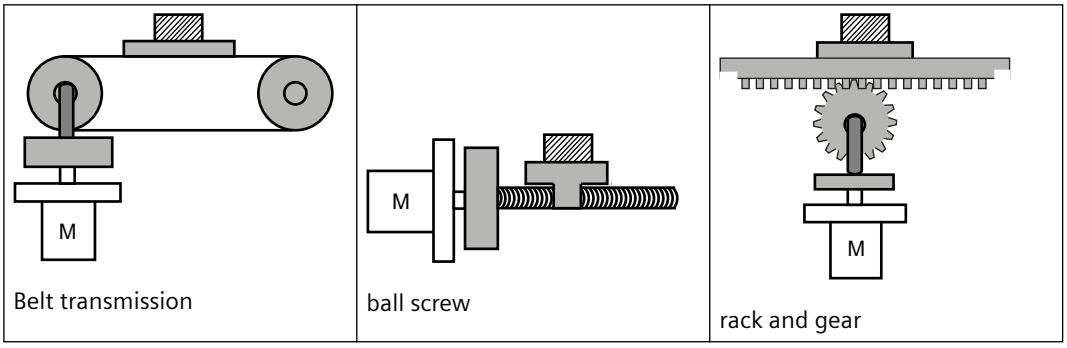

2. Determine the operation pattern including such parameters as acceleration time (ta), constant motion time (tu), deceleration time (td), stopping time (ts), cycle time (tc), and travel distance (L).
3. Calculate load inertia and inertia ratio.
   The inertia ratio can be obtained by dividing the load inertia by the rotor inertia of the selected motor. The unit of inertia is x 10^{-4} kg·m^2.
4. Calculate the speed.
   Calculate the speed according to the travel distance, acceleration time, deceleration time, and constant motion time.
5. Calculate the torque.
   Calculate the torque according to the load inertia, acceleration time, deceleration time, and constant motion time.
6. Select the motor.
   Select the motor that matches the data in step 3 to step 5.

Typical load inertia equations

Mechanism	Equation	Mechanism	Equation
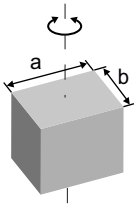 Axis of rotation on center	$J = \frac{W}{12}(a^2 + b^2)$ W: Mass (kg) a: Length (m) b: Width (m)	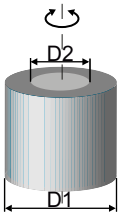 Axis of rotation on center	$J = \frac{W}{8}(D_1^2 + D_2^2)$ W: Mass (kg) D_1: External diameter (m) D_2: Internal diameter (m)
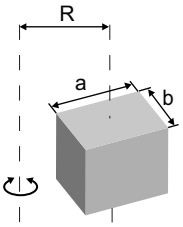 Axis of rotation off center	$J = W \cdot \left(\frac{a^2 + b^2}{3} + R^2\right)$ W: Mass (kg) a: Length (m) b: Width (m) R: Rotational diameter (m)	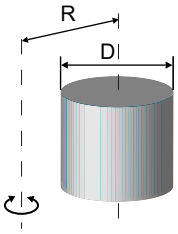 Axis of rotation off center	$J = \frac{W}{8}(D^2 + 8R^2)$ W: Mass (kg) D: Workpiece diameter (m) R: Rotational diameter (m)
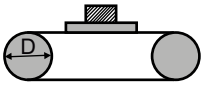 Conveyor	$J = \frac{W \cdot D^2}{4}$ W: Mass (kg) D: Pulley wheel diameter (m)	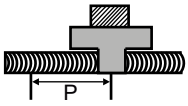 Ball screw	$J = \frac{W \cdot P^2}{4\pi^2} + J_b$ W: Mass (kg) P: Lead (m) J_b: Ball screw inertia (kg·m²)
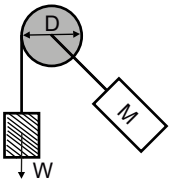 Object hung with pulley	$J = W \cdot \left(\frac{D}{2}\right)^2 + J_p$ W: Mass (kg) D: Pulley wheel diameter (m) J_p: Pulley inertia (kg·m²)	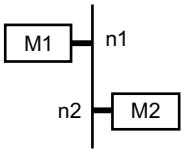 Reducer	$J = J_1 \cdot \frac{n_1^2}{n_2^2} \cdot J_2$ W: Mass (kg) n_1/n_2: Speed of each motor (rpm) J_1 /J_2: Inertia of each motor (kg·m²)

A.5.2 Selection examples

Description

This section uses a ball screw mechanism as an example to illustrate the motor selection procedure.

Exemplary data
The following table lists the data related to the ball screw mechanism and operation pattern.

Workpiece weight	W	10 kg
Material density of the ball screw	ρ	7.9×10^3 kg/m³

Ball screw length	B_l	0.5 m
Ball screw diameter	B_d	0.02 m
Ball screw pitch	B_p	0.02 m
Mechanical efficiency	B_η	0.9
Coupler inertia (refer to the supplier's product catalog)	J_c	20×10^{-6} kgm^2
Acceleration time	t_a	0.15 s
Constant motion time	t_u	0.5 s
Deceleration time	t_d	0.15 s
Cycle time	t_c	2 s
Travel distance	L	0.5 m
Gravitational acceleration	g	9.81 m/s^2
Frictional coefficient	μ	0.025

Calculating velocity

Maximum traveling velocity:

$$V_{max} = \frac{2 \cdot L}{t_a + 2 \cdot t_u + t_d} = \frac{2 \times 0.5}{0.15 + 2 \times 0.5 + 0.15} = 0.769 m/s$$

Calculating forces, pitch angle and friction angle

Frictional force:

$$F_R = \mu \cdot W \cdot g = 0.025 \times 10 \times 9.81 = 2.45N$$

Accelerating force/decelerating force:

$$F_a = F_d = W \cdot \frac{V_{max}}{t_a} = 10 \times \frac{0.769}{0.15} = 51.3N$$

Pitch angle of the ball screw:

$$\alpha_B = arctan \frac{B_p}{\pi \cdot B_d} = arctan \frac{0.02}{3.14 \times 0.02} = 0.308 rad$$

Friction angle of the ball screw:

$$\beta = arctan \frac{B_p}{\pi \cdot B_d \cdot B_\eta} - \alpha_B = arctan \frac{0.02}{3.14 \times 0.02 \times 0.9} - 0.308 = 0.0318 rad$$

Calculating torques for the ball screw and the coupling when accelerating and decelerating

Angular velocity of the ball screw at V_{max}:

$$\omega_{\max B} = \frac{2 \cdot \pi \cdot V_{max}}{B_p} = \frac{2 \times 3.14 \times 0.769}{0.02} = 241.538 s^{-1}$$

Maximum rotating velocity:

$$n_{motor\ max} = \frac{\omega_{\max B} \cdot 60}{2 \cdot \pi} = \frac{241.538 \times 60}{2 \times 3.14} = 2308rpm$$

Angular acceleration of the ball screw:

$$\alpha_{aB} = \frac{\omega_{\max B}}{t_a} = \frac{241.538}{0.15} = 1610.26s^{-2}$$

Ball screw weight:

$$B_W = \rho \cdot \pi \cdot \left(\frac{B_d}{2}\right)^2 \cdot B_l = 7.9 \times 10^3 \times 3.14 \times \left(\frac{0.02}{2}\right)^2 \times 0.5 = 1.24kg$$

Moment of inertia of the ball screw:

$$J_B = \frac{B_W}{8} \cdot B_d^2 = \frac{1.24}{8} \times 0.02^2 = 0.00006kgm^2$$

Moment of inertia of the ball screw + coupling:

$$J_{B+c} = J_B + J_c = 0.00006 + 0.00002 = 0.00008kgm^2$$

Accelerating torque and decelerating torque for the ball screw + coupling:

$$M_{aB+c} = M_{dB+c} = J_{B+c} \cdot \alpha_{aB} = 0.00008 \times 1610.26 = 0.13Nm$$

Preselecting the motor

Based on the calculated torques, if we select the 1FL2203-4AG motor:

n_n = 3000 rpm, M_n = 1.27 Nm, J_{motor} = 0.038 × 10^{-3} kgm^2

Then the inertia ratio:

$$\frac{J_{load}}{J_{motor}} = \frac{J_{B+c} + J_W}{J_{motor}} = \frac{0.00008 + 0.0001}{0.038 \times 10^{-3}} = 4.74$$

Wherein, J_W is the moment of inertia of the workpiece:

$$J_W = W \cdot \frac{B_p^2}{4 \cdot \pi^2} = 10 \times \frac{0.02^2}{4 \times 3.14^2} = 0.0001kgm^2$$

Calculating the motor torques during the constant motion phase

$$M_{motor} = F_R \cdot \frac{B_d}{2} \cdot \tan(\alpha_B + \beta) = 2.45 \times \frac{0.02}{2} \times \tan(0.308 + 0.0318) = 0.009Nm$$

Calculating the motor torques when accelerating and decelerating

$$M_{amotor} = M_{dmotor} = J_{motor} \cdot \alpha_{aB} = 0.038 \times 10^{-3} \times 1610.26 = 0.06Nm$$

Accelerating torque and decelerating torque for the motor:

Motor torque when accelerating:

$$M_{motor} = M_{amotor} + M_{aB+c} + (F_a + F_R) \cdot \frac{B_d}{2} \cdot \tan(\alpha_B + \beta)$$
$$= 0.06 + 0.13 + (51.3 + 2.45) \times \frac{0.02}{2} \times \tan(0.308 + 0.0318) = 0.383Nm$$

Motor torque when decelerating:

$$M_{motor} = -M_{dmotor} - M_{dB+c} + (-F_a + F_R)^* \cdot \frac{B_d}{2} \cdot \tan(\alpha_B + \beta \cdot sign(+)^*)$$
$$= -0.06 - 0.13 + (-51.3 + 2.45) \times \frac{0.02}{2} \times \tan(0.308 - 0.0318) = -0.332Nm$$

* If the expression in brackets has a negative sign, the sign of β changes to minus.

Final selection

According to the above calculated speed, torque, and inertia ratio, 1FL2203-4AG motor is suitable.

A.6 Replacement instructions for shaft sealing ring on 1FL2 motors SH20 and SH30

Overview

The IP65 degree of protection kit can be used by the end customer either to replace the shaft sealing ring or to upgrade the degree of protection from IP54 to IP65.

It consists of the following components:

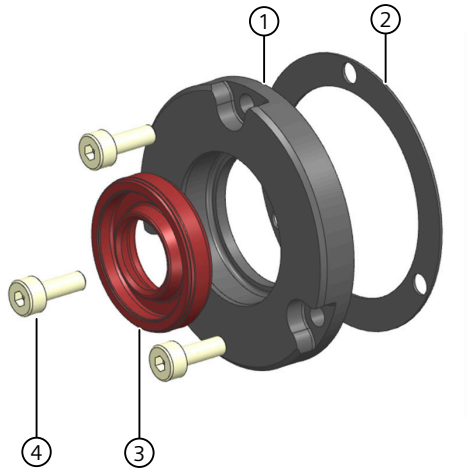

① Adapter flange × 1
② Gasket × 1
③ Shaft sealing ring × 1
④ Screw × 3

Figure A-9 IP65 degree of protection kit of SH20

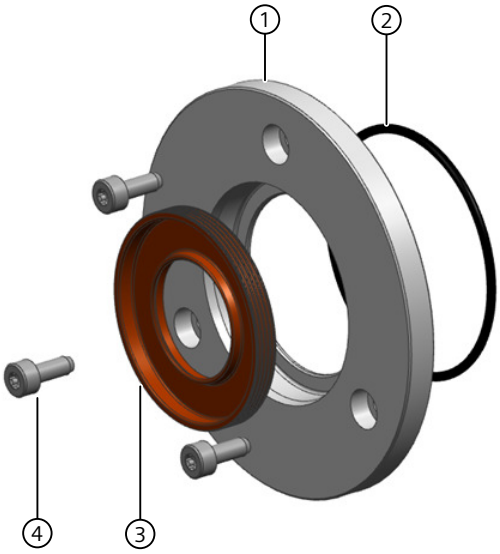

① Adapter flange × 1
② O-ring × 1
③ Shaft sealing ring × 1
④ Screw × 3

Figure A-10 IP65 degree of protection kit of SH30

Requirement

You have prepared appropriate tools and the IP65 degree of protection kit.

Procedure

The following instructions take 1FL2 motors SH30 as an example.

Disassembly

To disassemble the old components, proceed as follows:

1. Remove three fixing screws of the adapter flange.
2. Take apart the adapter flange with the shaft sealing ring pressed.

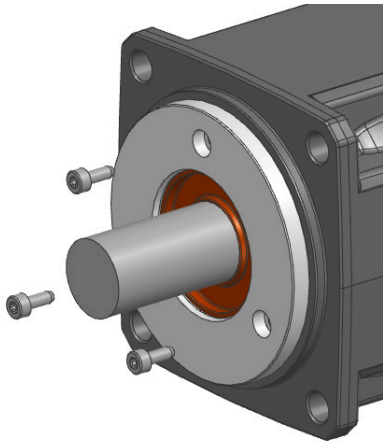

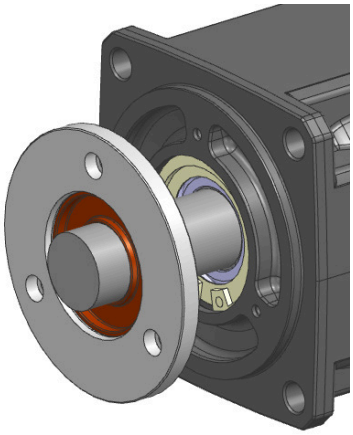

Assembly

To assemble the new components, proceed as follows:

1. Insert an O-ring in the groove of the adapter flange.
   Make sure that the O-ring is not clamped between DE end shield and adapter flange.

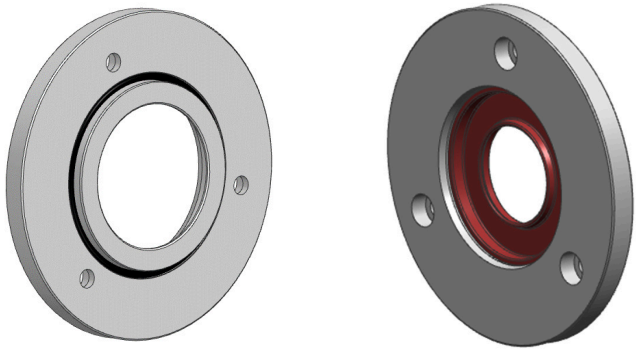

2. After applying grease onto the sealing area, fix the adapter flange with the shaft sealing ring already pressed on with three screws.

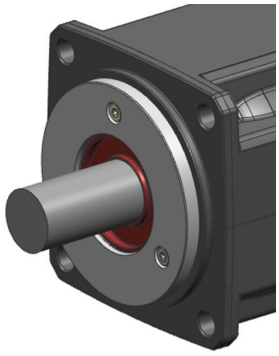

Get more information

SINAMICS:
www.siemens.com/sinamics

SIMOTICS:
www.siemens.com/simotics

Industry Mall:
www.siemens.com/industrymall

Industry Online Support:
www.siemens.com/online-support